LOCATION SECTION

Contents

1. Overview of Storage System

Figure 1-1 Overview of HSNBX

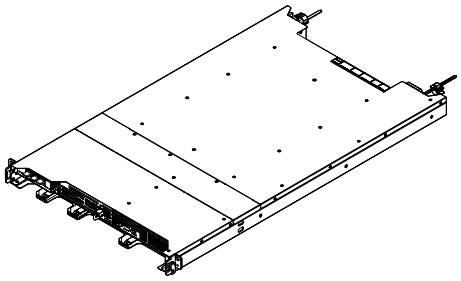

HSNBX

Figure 1-2 Overview of Controller Chassis

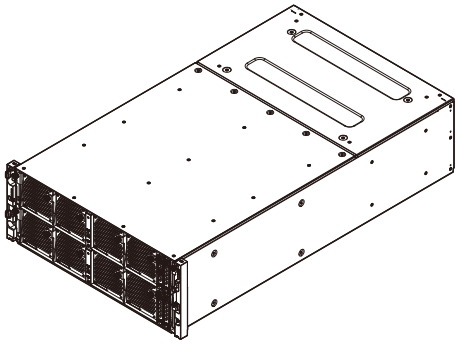

DKC

Figure 1-3 Overview of Drive Box

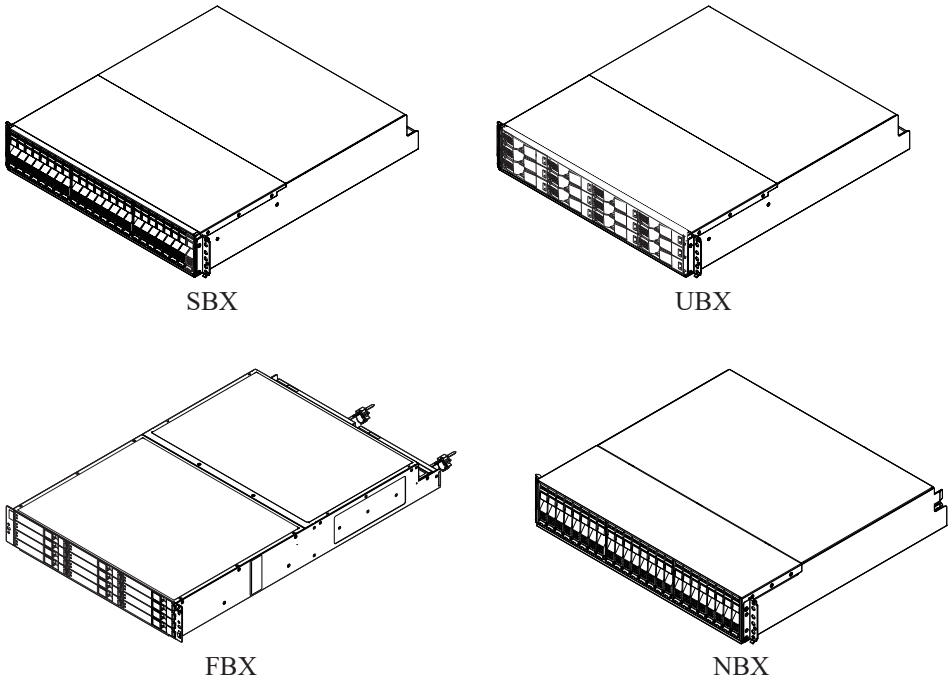

2. Parts Location

2.1 Configuration Example of Main Parts

The following figure shows a configuration example of installing Controller Chassis (4U) HSNBX (1U) and Drive Box (2U) in 42 units rack frame.

Figure 2-1 Configuration Example of Main Parts (1 CBX Pair Configuration/2 CBX Pairs Configuration)

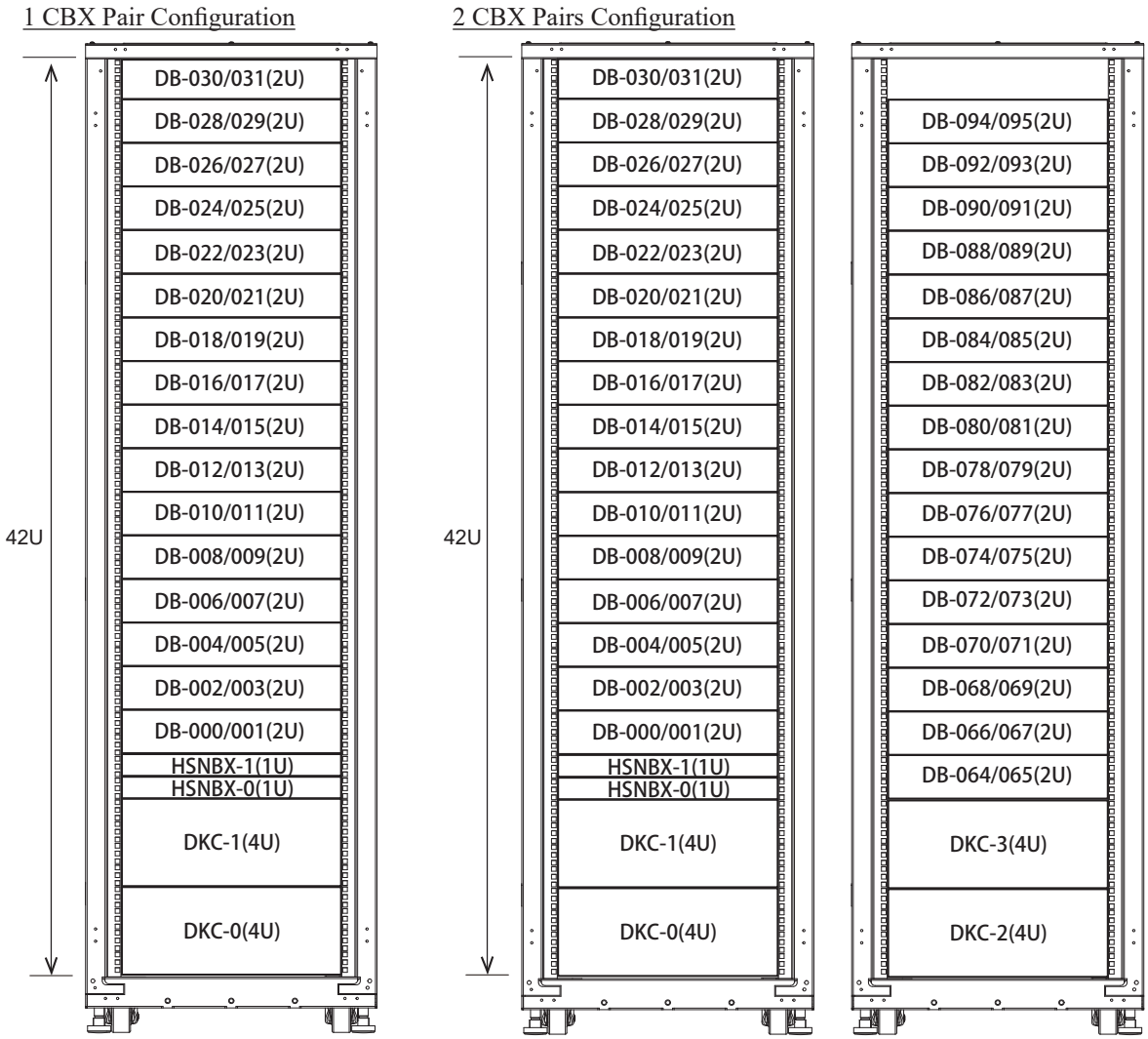

Figure 2-2 Configuration Example of Main Parts (3 CBX Pairs Configuration)

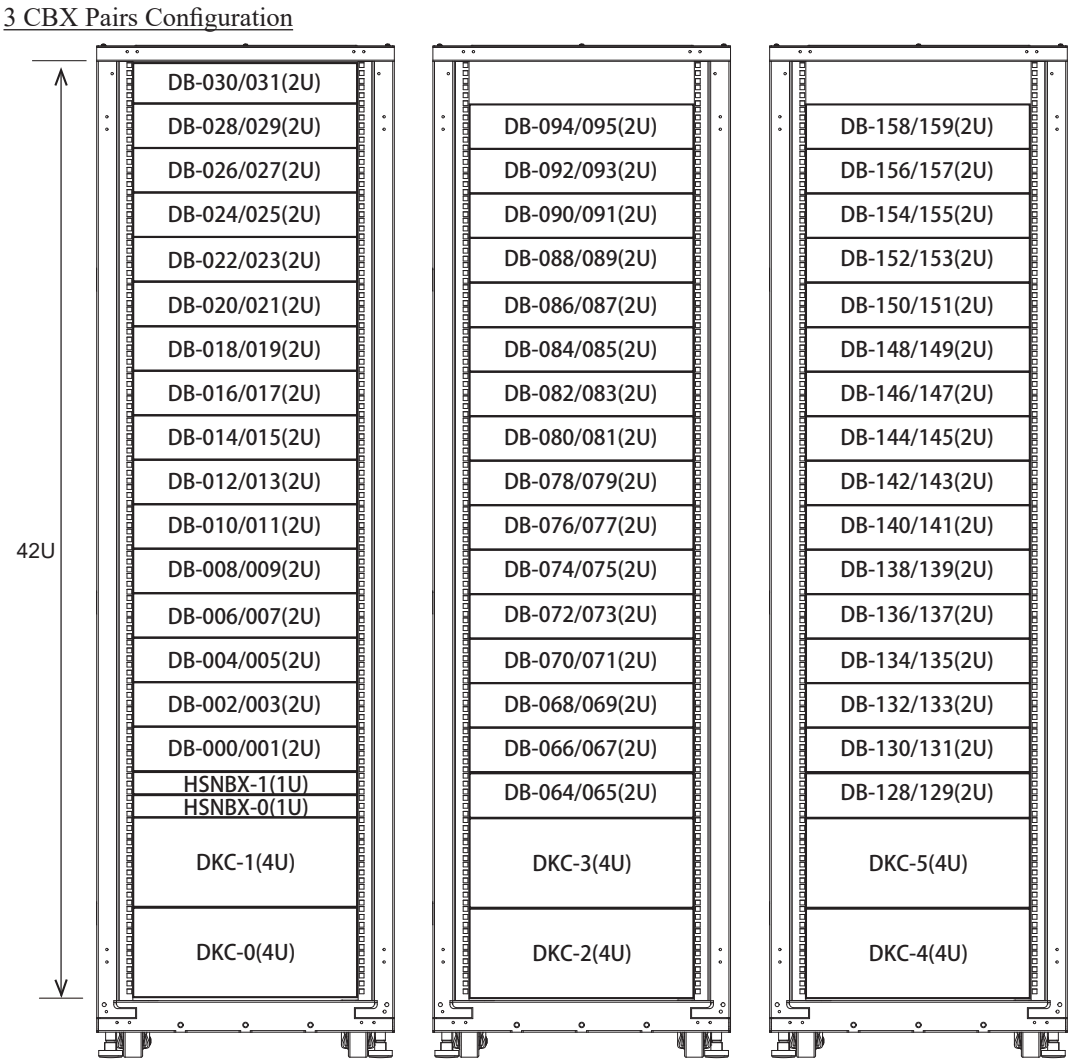

2.2 HSNBX

The following figure shows the parts location of HSNBX-0/1.

Figure 2-3 Parts Location of HSNBX

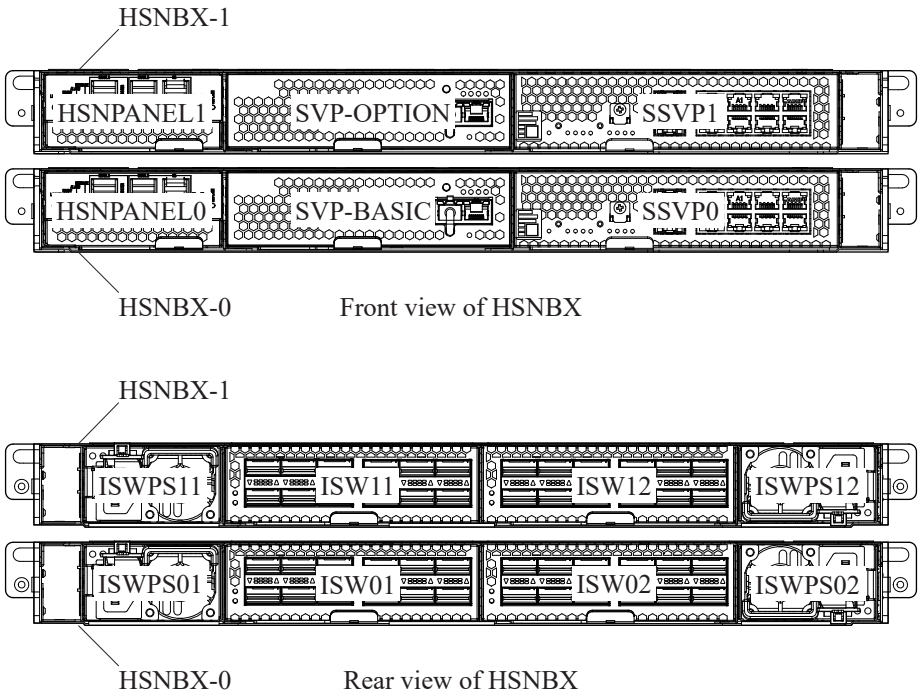

2.3 Controller Chassis

For VSP 5500 and VSP 5500H, four CTLs are installed in two DKCs (two CTLs in each DKC).
For VSP 5100 and VSP 5100H, two CTLs are installed in two DKCs (one CTL in each DKC). The locations of CTLs are CTL01 in DKC-0 and CTL12 in DKC-1. The following figure shows the parts location of DKC.

Figure 2-4 Parts Location of DKC-x

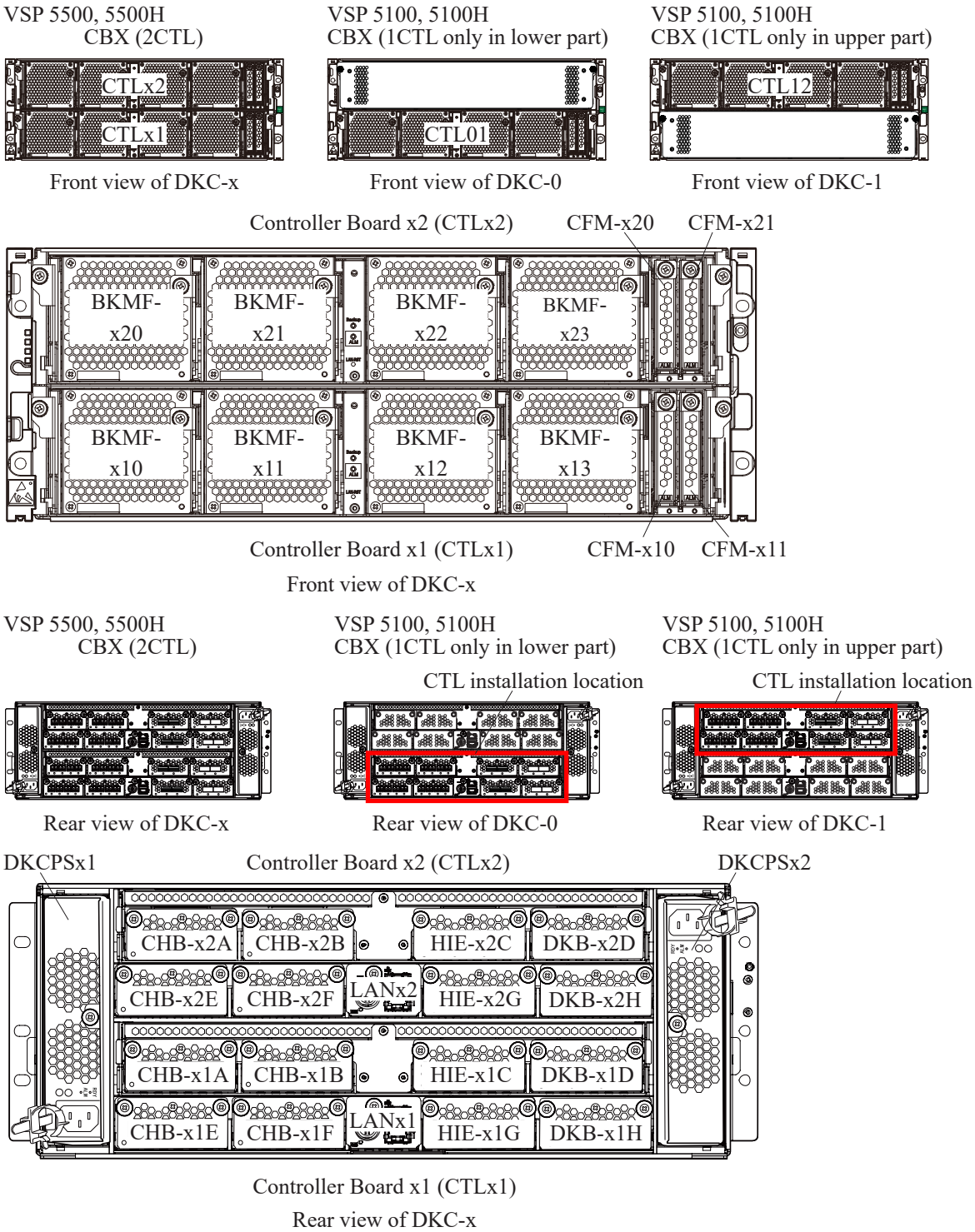

*1: DKC-x
└→DKC No. (0, 1, 2, ..., 5)

2.4 DKU (16U/8U)

The number (DB-xx) of Drive Box doesn't indicate the installation location of Drive Box, but indicates the order of installation. Therefore, while performing process to Drive Box, it is necessary to confirm location with the location label put on Drive Box, and be careful not to make a mistake of the target location.

2.4.1 UBX (16U)

The following figure shows the parts location of UBX.

Figure 2-5 Parts Location of UBX

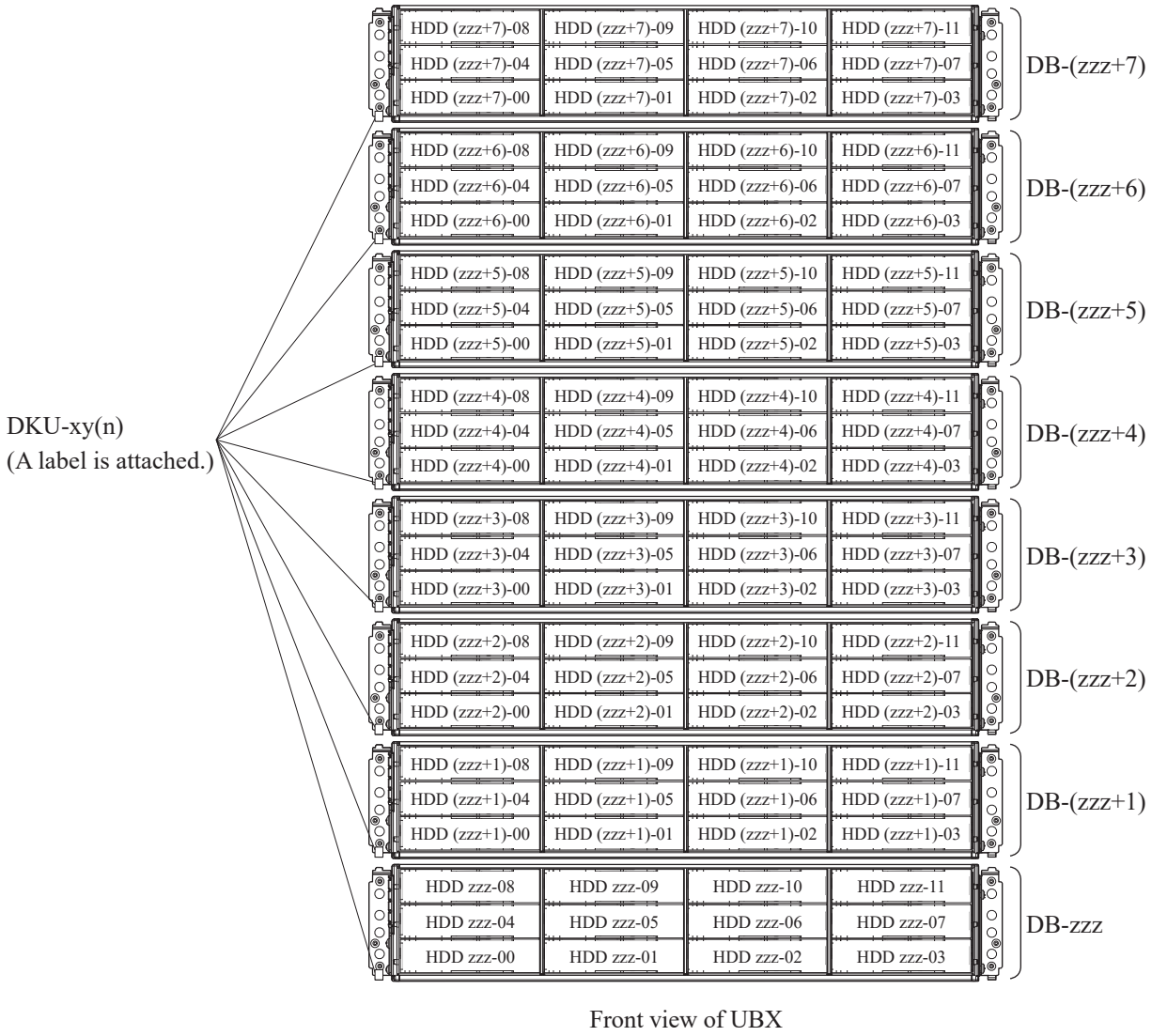

*1 : The name in parentheses in the SVP messages shows HDDxxx-yy here.

*2: DKU-xy(n)

- n: Drive Box number in DKU (0, 1, 2 ..., 7)
- y: DKU No. (1, 2, ..., 7)
- x: CBX Pair No. (0, 1, 2)

*3: DB-zzz
└→DB No. (008, 009, 010, ..., 191)

*4: The slot number on DBL (UBX) displayed in the DKU-mm: Drive Box window of Maintenance Utility is the same as “yy” in “HDDxxx-yy”.

NOTE: Turn on the LOCATE LED by using Maintenance Utility during maintenance work. If you cannot turn on the LOCATE LED, check the number (*2) shown on the label attached to the lower left part of the front side of UBX so that you do not confuse the maintenance target.

For example, numbers shown on the labels (DKU-xy(n)) and DB numbers (DB-zzz) of DKU-01 are as follows:
For UBX, a smaller number on the label (DKU-xy(n)) corresponds to a smaller DB number (DB-zzz+n).

DKU-01(0): DB-008
DKU-01(1): DB-009
DKU-01(2): DB-010
DKU-01(3): DB-011
DKU-01(4): DB-012
DKU-01(5): DB-013
DKU-01(6): DB-014
DKU-01(7): DB-015
...

When the location of the target drive for maintenance is HDD013-02, the DB number is DB-013. The DKU in which the target drive is installed is DKU-01(5), and the slot number of the target drive is “2”.

Figure 2-6 Parts Location of UBX (Rear)

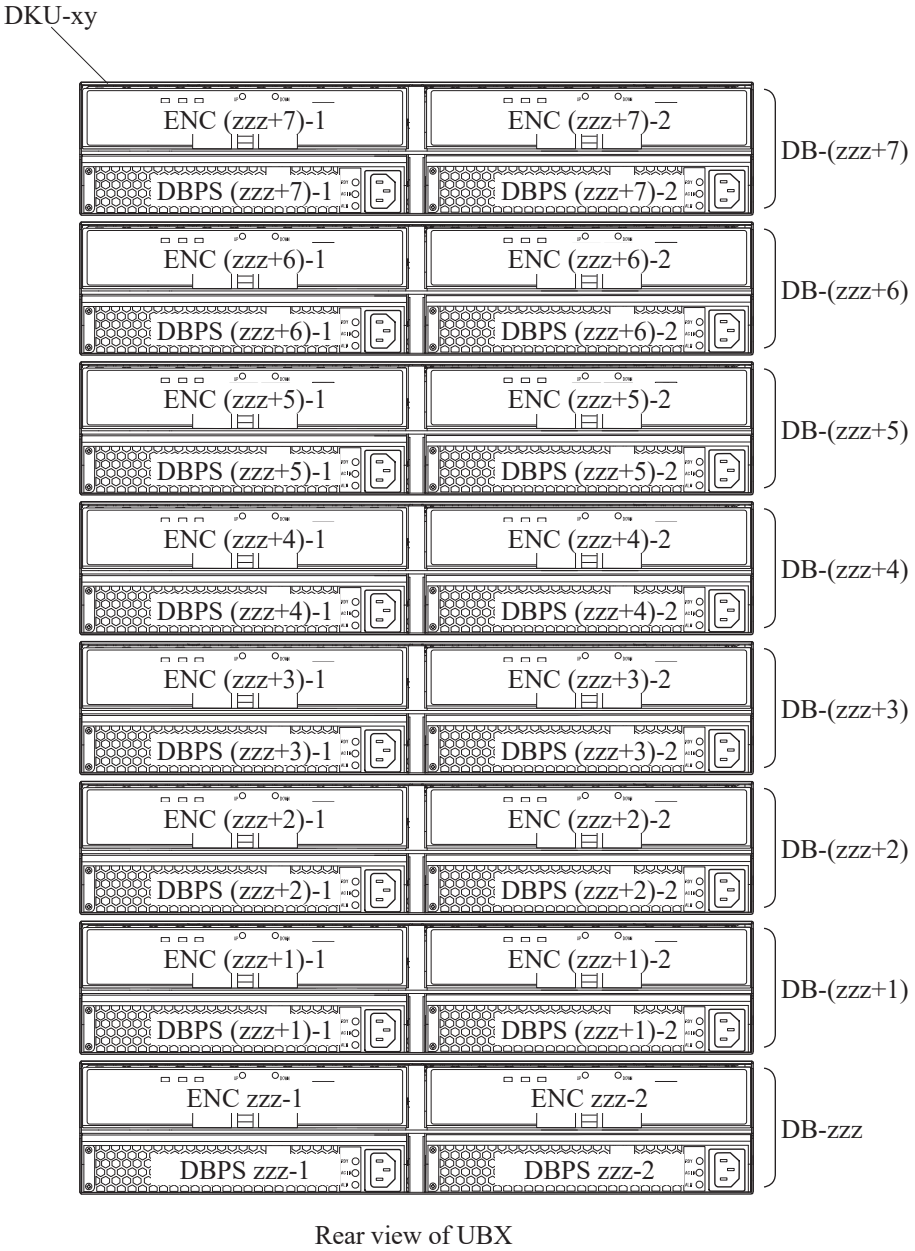

*2: DKU-xy
- x → DKU No. (1, 2, ..., 7)
- y → CBX Pair No. (0, 1, 2)

*3: DB-zzz
- zzz → DB No. (008, 009, 010, ..., 191)

2.4.2 SBX/NBX (8U)

The following figure shows the parts location of SBX/NBX.

Figure 2-7 Parts Location of SBX (Front View)

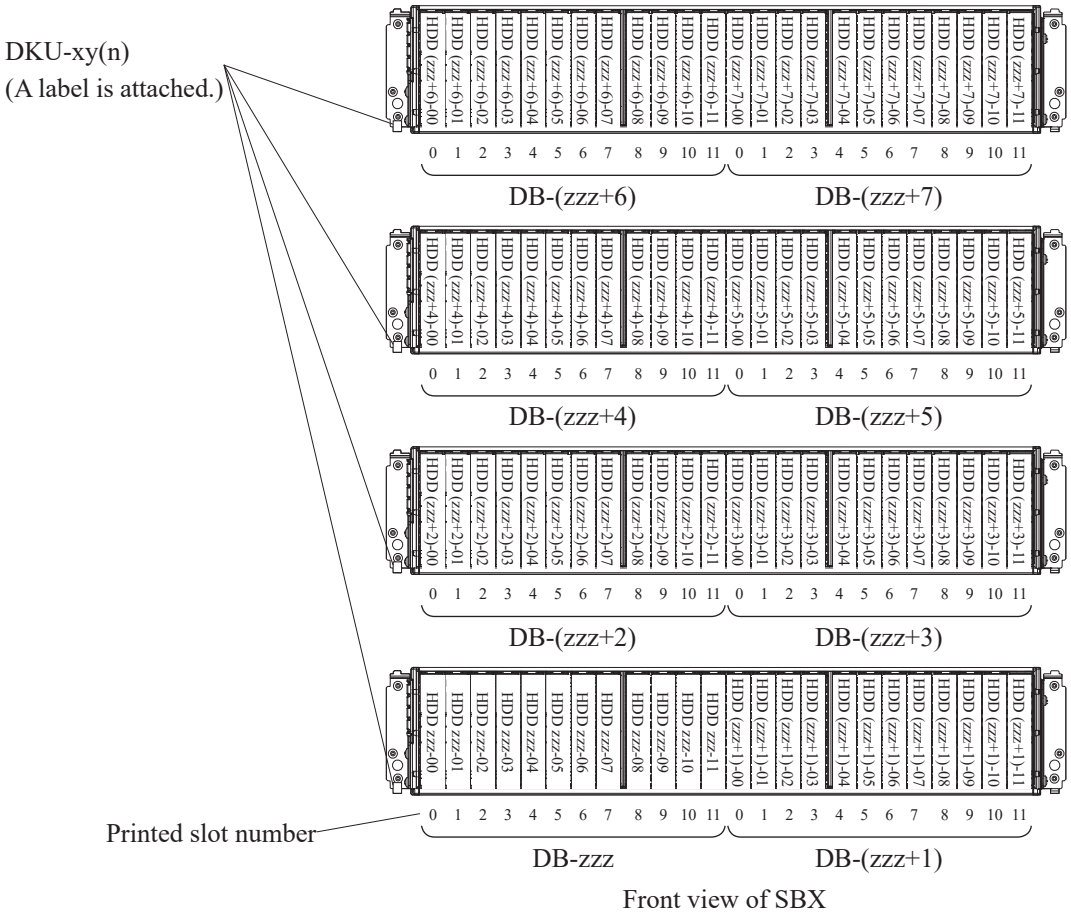

Figure 2-8 Parts Location of NBX (Front View)

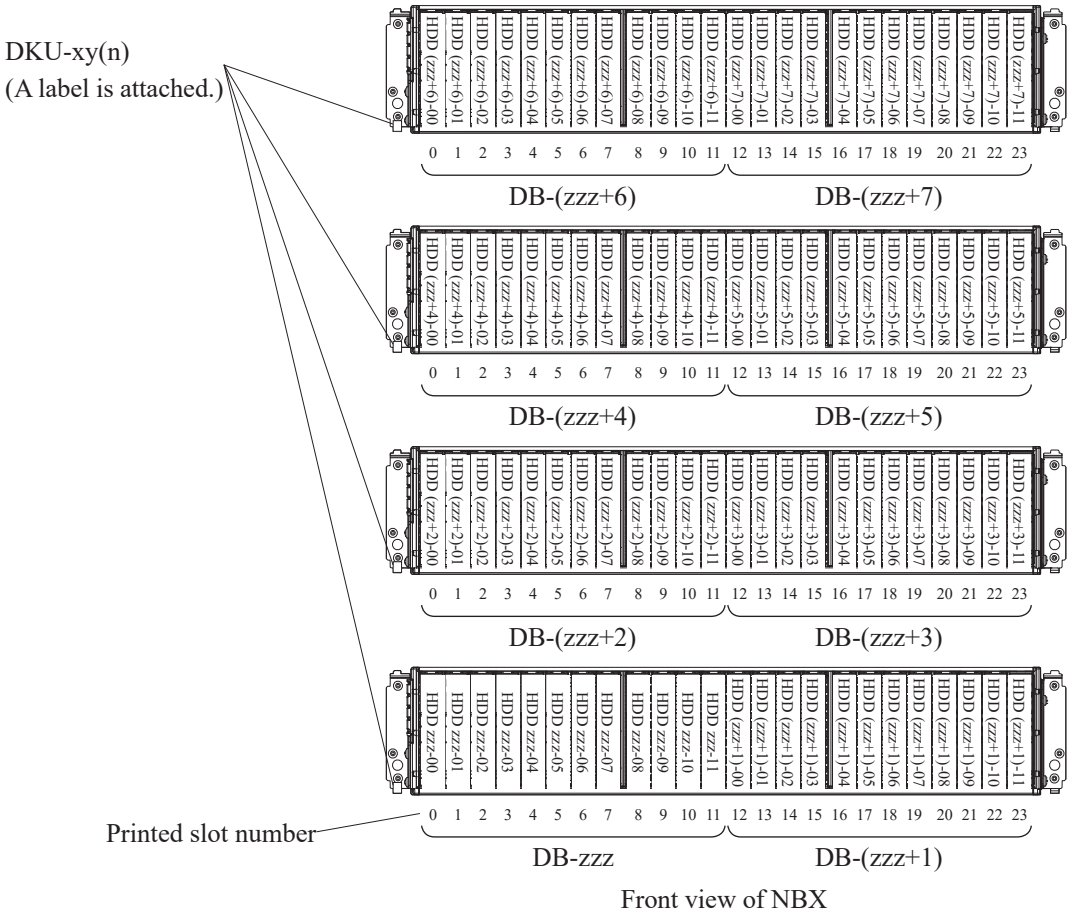

*1 : The name in parentheses in the SVP messages shows HDDxxx-yy here.

*2: DKU-xy(n)
- n: Drive Box number in DKU (0, 1, 2, and 3)
- y: DKU No. (0, 1, 2 ..., 7)
- x: CBX Pair No. (0, 1, 2)

*3: DB-zzz
- DB No. (000, 001, 002, ..., 191)

*4: The slot numbers on DBS2 (SBX) displayed in the DKU-mm: Drive Box window of Maintenance Utility are the same as the slot numbers shown in Figure 2-7.

*5: The slot numbers on DBN (NBX) displayed in the DKU-mm: Drive Box window of Maintenance Utility are the same as the slot numbers shown in Figure 2-8.

NOTE: Turn on the LOCATE LED by using Maintenance Utility during maintenance work. If you cannot turn on the LOCATE LED, check the number (*2) shown on the label attached to the lower left part of the front side of SBX/NBX so that you do not confuse the maintenance target.

For example, numbers shown on the labels (DKU-xy(n)) and DB numbers (DB-zzz) of DKU-00 and DKU-01 are as follows:
For SBX/NBX, a smaller number on the label (DKU-xy(n)) corresponds to smaller DB numbers (two in total; (DB-zzz+(2n)) and (DB-zzz+(2n+1))).

DKU-00(0) : DB-000, DB-001
DKU-00(1) : DB-002, DB-003
DKU-00(2) : DB-004, DB-005
DKU-00(3) : DB-006, DB-007
DKU-01(0) : DB-008, DB-009
DKU-01(1) : DB-010, DB-011
DKU-01(2) : DB-012, DB-013
DKU-01(3) : DB-014, DB-015
...

When the location of the target drive for maintenance is HDD013-02, the DB number is DB-013. The DKU in which the target drive is installed is DKU-01(2), and the slot number of the target drive is “2” (right side) for SBX, and “14” for NBX.

Figure 2-9 Parts Location of SBX/NBX (Rear)

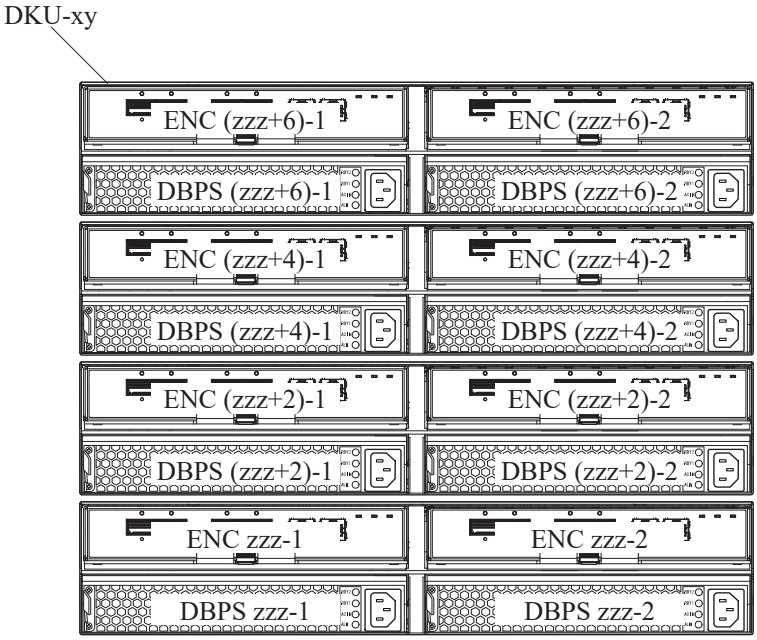

Rear view of SBX/NBX

*1: DKU-xy
- x → DKU No. (0, 1, 2, ..., 7)
- y → CBX Pair No. (0, 1, 2)

*2: DB-zzz
- zzz → DB No. (000, 001, 002, ..., 191)

2.4.3 FBX (8U)

The following figure shows the parts location of FBX.

Figure 2-10 Parts Location of FBX

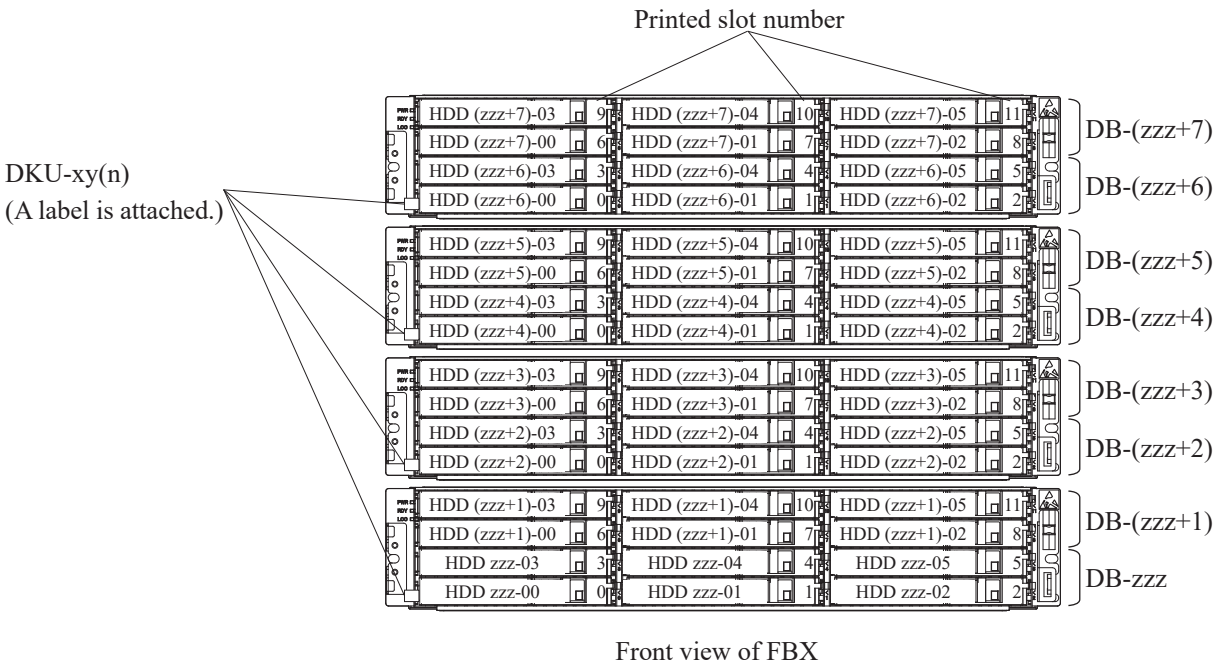

*1 : The name in parentheses in the SVP messages shows HDDxxx-yy here.

*2: DKU-xy(n)
- n: Drive Box number in DKU (0, 1, 2, and 3)
- y: DKU No. (0, 1, 2 ..., 7)
- x: CBX Pair No. (0, 1, 2)

*3: DB-zzz
- DB No. (000, 001, 002, ..., 191)

*4: The slot numbers on DBF (FBX) displayed in the DKU-mm: Drive Box window of Maintenance Utility are the same as the slot numbers shown in Figure 2-10.

NOTE: Turn on the LOCATE LED by using Maintenance Utility during maintenance work. If you cannot turn on the LOCATE LED, check the number (*2) shown on the label attached to the lower left part of the front side of FBX so that you do not confuse the maintenance target.

For example, numbers shown on the labels (DKU-xy(n)) and DB numbers (DB-zzz) of DKU-00 and DKU-01 are as follows:
For FBX, a smaller number on the label (DKU-xy(n)) corresponds to smaller DB numbers (two in total; (DB-zzz+(2n)) and (DB-zzz+(2n+1))).

DKU-00(0) : DB-000, DB-001
DKU-00(1) : DB-002, DB-003
DKU-00(2) : DB-004, DB-005
DKU-00(3) : DB-006, DB-007
DKU-01(0) : DB-008, DB-009
DKU-01(1) : DB-010, DB-011
DKU-01(2) : DB-012, DB-013
DKU-01(3) : DB-014, DB-015
...

When the location of the target drive for maintenance is HDD013-02, the DB number is DB-013. The DKU in which the target drive is installed is DKU-01(2), and the slot number of the target drive is “8”.

Figure 2-11 Parts Location of FBX (Rear)

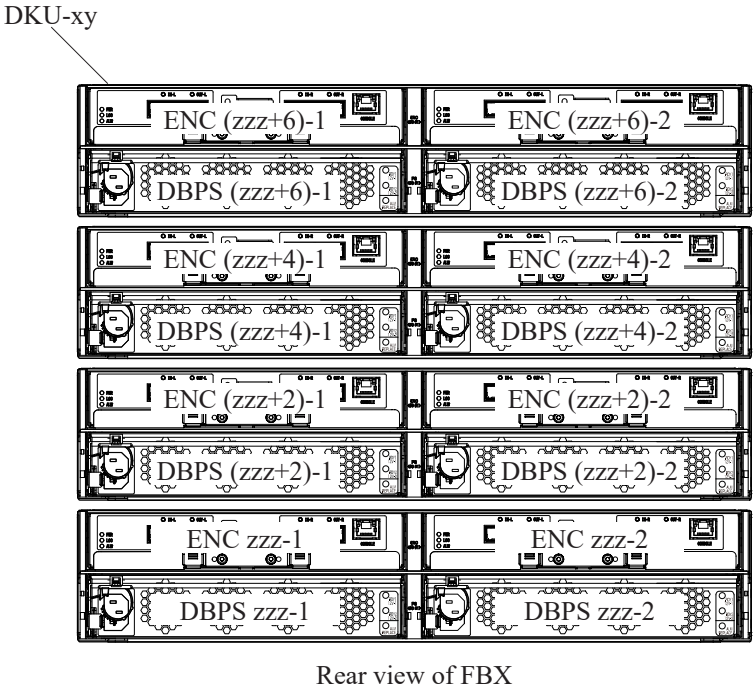

*1: DKU-xy
- x → DKU No. (0, 1, 2, ..., 7)
- y → CBX Pair No. (0, 1, 2)

*2: DB-zzz
- zzz → DB No. (000, 001, 002, ..., 191)

2.5 Parts Location

2.5.1 Parts Location of HSNBX

The following figure shows the parts location of HSNBX.

Figure 2-12 Parts Location of HSNBX

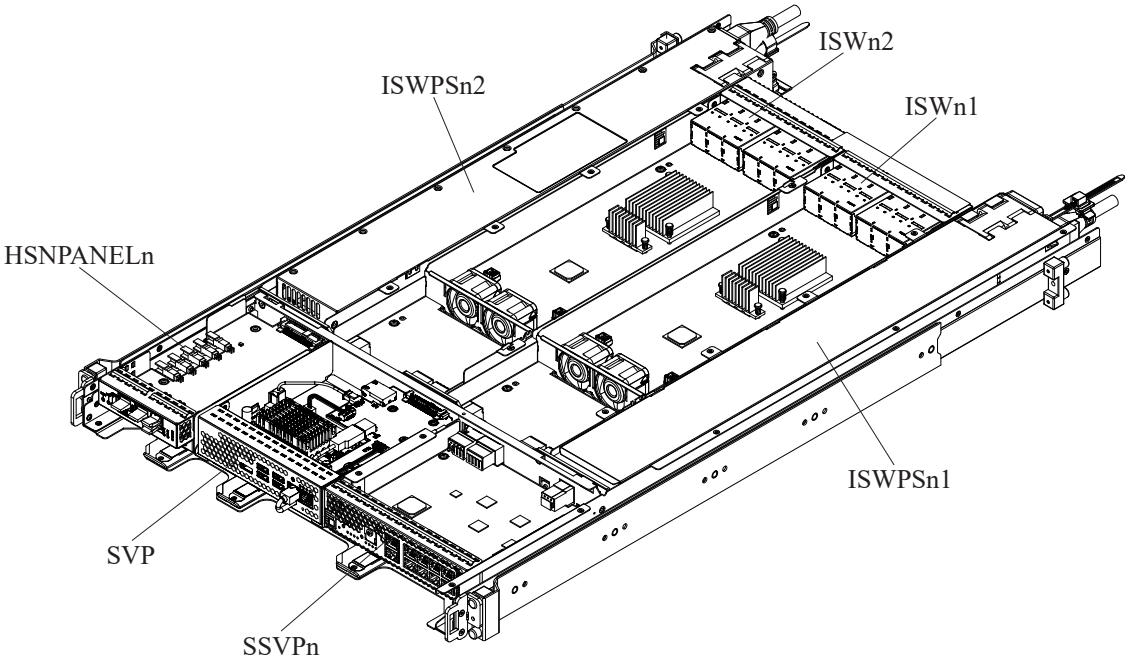

General view of HSNBX-n

*1: HSNBX-n
└→ HSNBX No. (0, 1)

2.5.1.1 Parts Location of ISWFAN

The following figure shows the parts location of ISWFAN.

Figure 2-13 Parts Location of ISWFAN

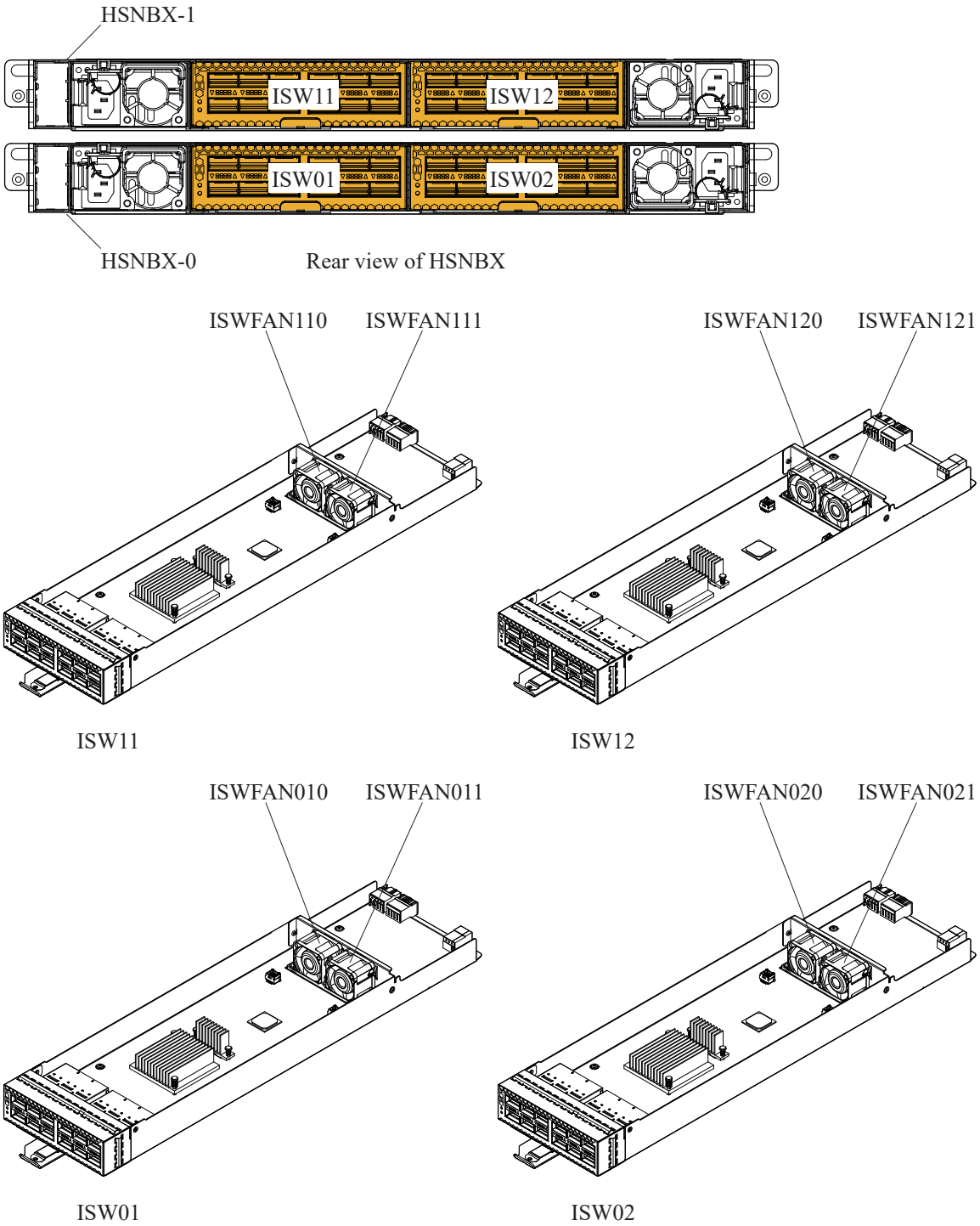

2.5.2 Parts Location of DKC

The following figure shows the parts location of DKC.

Figure 2-14 Location of DKC

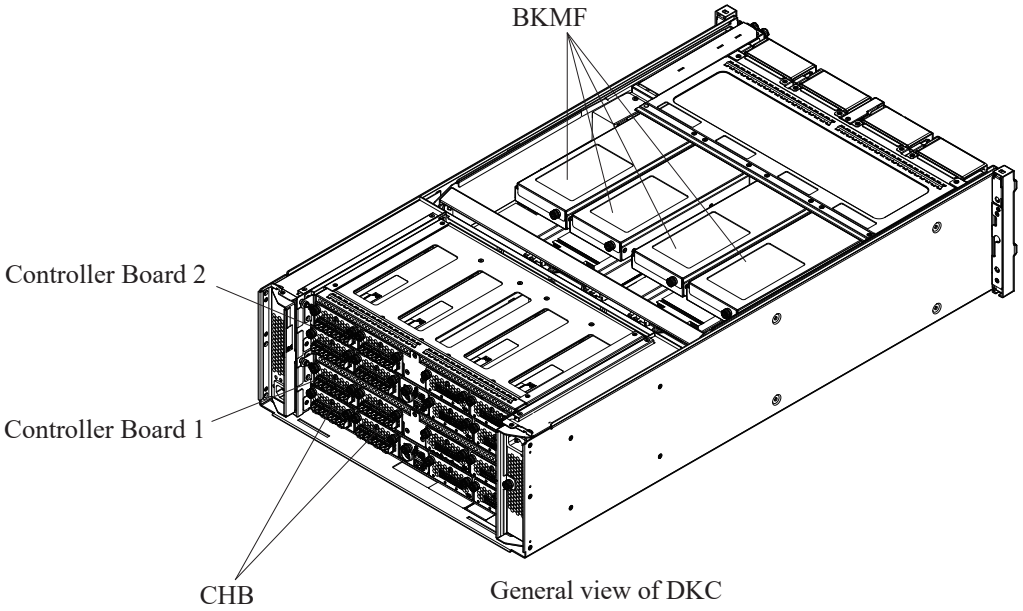

General view of DKC

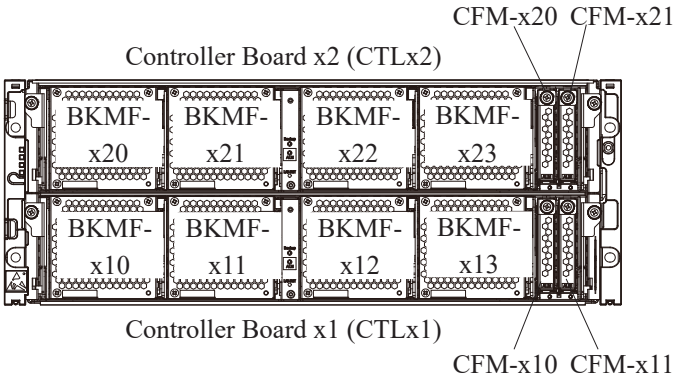

Front view of DKC-x

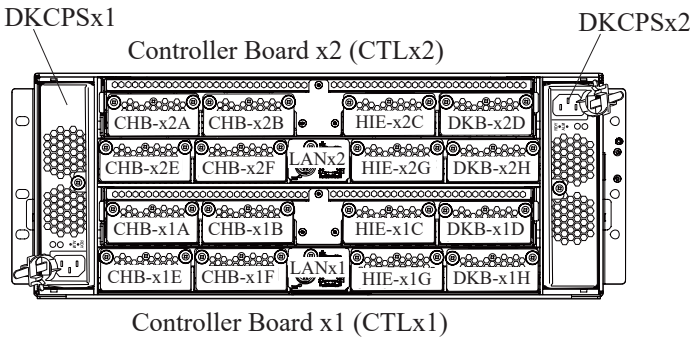

Rear view of DKC－x

NOTE: The above illustrations are for VSP 5500 and VSP 5500H. For VSP 5100 and VSP 5100H, only CTL01 and CTL12 are installed.

2.5.2.1 BKMF

The following figure shows the BKMF location and the BAT (Battery) location.

Figure 2-15 Location of BKMF/BAT (Battery)

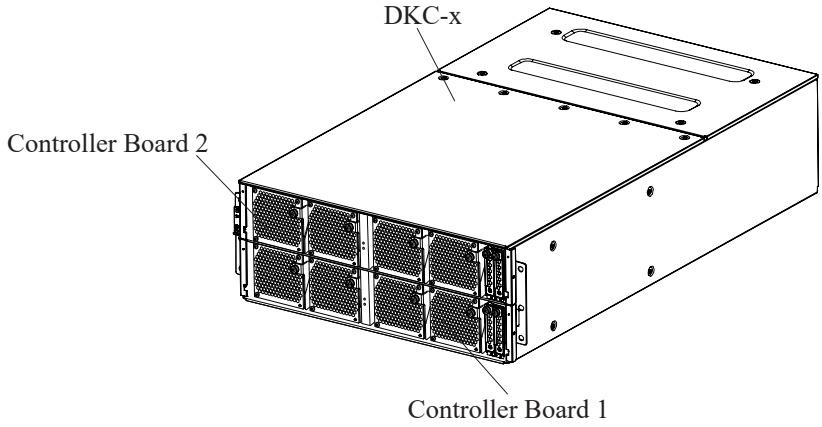

BKMF of Controller Board 1

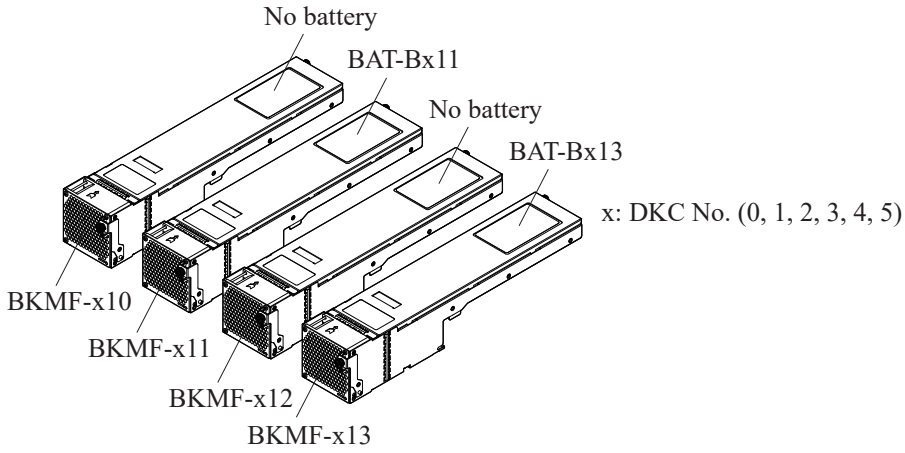

BKMF of Controller Board 2

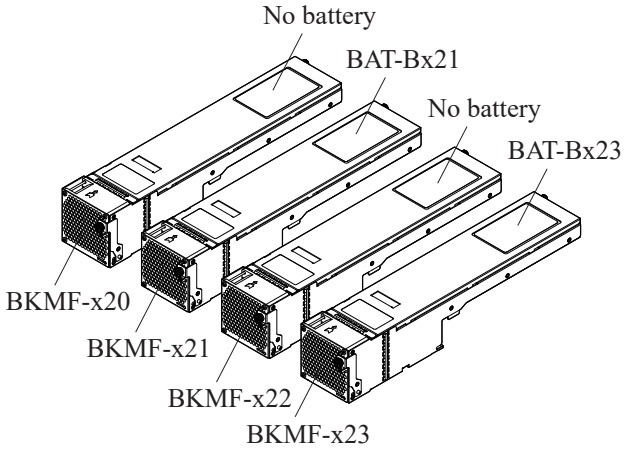

NOTE: The above illustrations are for VSP 5500 and VSP 5500H. For VSP 5100 and VSP 5100H, only CTL01 and CTL12 are installed.

2.5.2.2 Cache Memory Location of DKC

The following figure shows the Cache Memory location on the DKC Parts.

Figure 2-16 Cache Memory Location on the Controller Board (DKC)

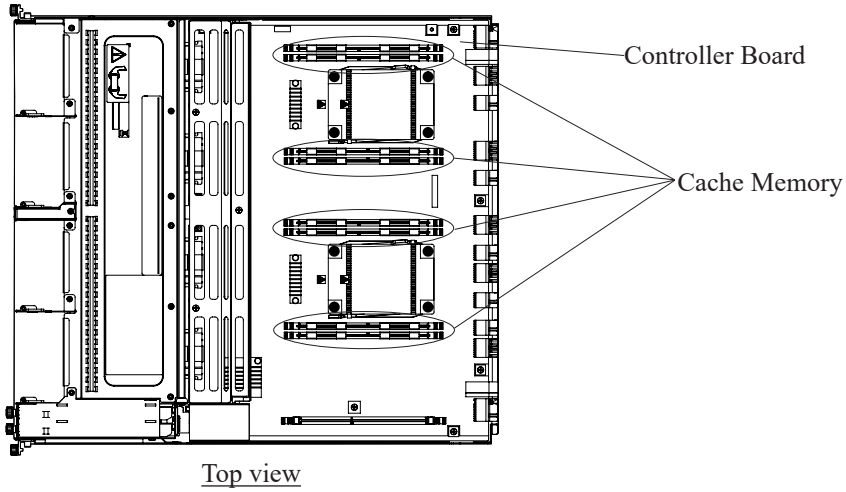

Cache Memory Location

DIMM13:	*2
DIMM12:	*2

DIMM02:	*1
DIMM03:	*1

DIMM11:	*2
DIMM10:	*2

DIMM00:	*1
DIMM01:	*1

*1: Belonging to CMG0 (Cache Memory Group 0).
*2: Belonging to CMG1 (Cache Memory Group 1).
Be sure to install DIMM in CMG0.
CMG1 is an additional slot of DIMM.
Install DIMM in sets of four.

2.5.2.3 Channel Board (CHB)/Disk Board (DKB) of DKC

The following figure shows the Channel Board/Disk Board location of the rear side of the DKC.

1. DKC-0/1

Figure 2-17 Channel Board/Disk Board Location (Rear view of DKC-0/1)

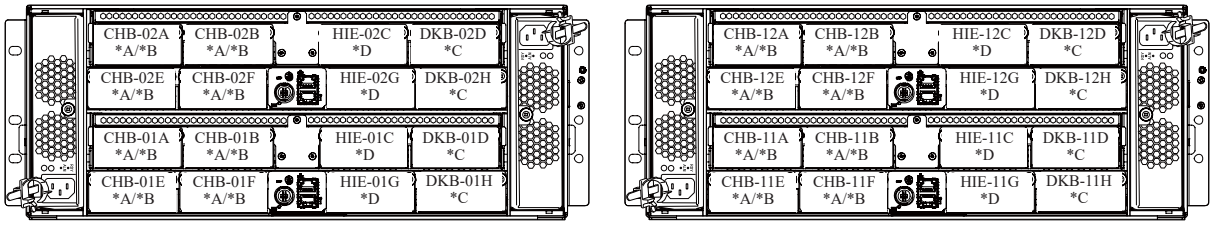

Rear view of DKC-0 Rear view of DKC-1

*A : CHB (16 Gbps (4 port) FICON/16, 32 Gbps (4 port) FC) location details

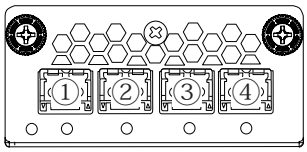

*B : CHB (10 Gbps (2 port) iSCSI) location details

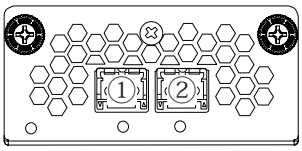

CHB#	①	②	③	④
CHB-01A	1A	3A	5A	7A
CHB-01B	1C	3C	5C	7C
CHB-01E	1E	3E	5E	7E
CHB-01F	1G	3G	5G	7G
CHB-02A	1B	3B	5B	7B
CHB-02B	1D	3D	5D	7D
CHB-02E	1F	3F	5F	7F
CHB-02F	1H	3H	5H	7H
CHB-11A	2A	4A	6A	8A
CHB-11B	2C	4C	6C	8C
CHB-11E	2E	4E	6E	8E
CHB-11F	2G	4G	6G	8G
CHB-12A	2B	4B	6B	8B
CHB-12B	2D	4D	6D	8D
CHB-12E	2F	4F	6F	8F
CHB-12F	2H	4H	6H	8H

*C : DKB location details

For SAS connection

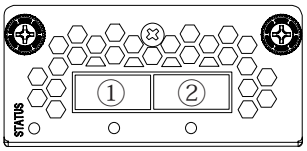

For NVMe connection

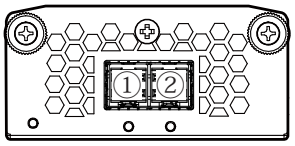

DKB#	①	②
DKB-01D	01D-0	01D-1
DKB-01H	01H-0	01H-1
DKB-02D	02D-0	02D-1
DKB-02H	02H-0	02H-1
DKB-11D	11D-0	11D-1
DKB-11H	11H-0	11H-1
DKB-12D	12D-0	12D-1
DKB-12H	12H-0	12H-1

*D : HIE location details

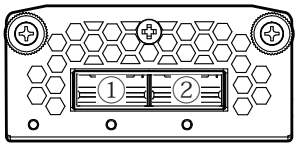

HIE#	①	②
HIE-01C	HIE-01C-0	HIE-01C-1
HIE-01G	HIE-01G-0	HIE-01G-1
HIE-02C	HIE-02C-0	HIE-02C-1
HIE-02G	HIE-02G-0	HIE-02G-1
HIE-11C	HIE-11C-0	HIE-11C-1
HIE-11G	HIE-11G-0	HIE-11G-1
HIE-12C	HIE-12C-0	HIE-12C-1
HIE-12G	HIE-12G-0	HIE-12G-1

NOTE: The above illustrations are for VSP 5500 and VSP 5500H. For VSP 5100 and VSP 5100H, only CTL01 and CTL12 are installed.

2. DKC-2/3

Figure 2-18 Channel Board/Disk Board Location (Rear view of DKC-2/3)

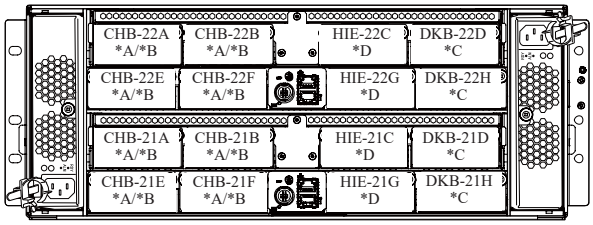

Rear view of DKC-2

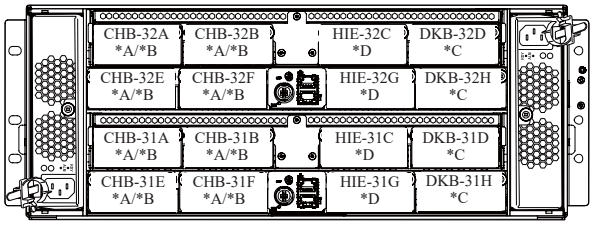

Rear view of DKC-3

*A：CHB (16 Gbps (4 port) FICON/16, 32 Gbps (4 port) FC) location details

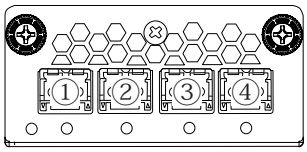

*B：CHB (10 Gbps (2 port) iSCSI) location details

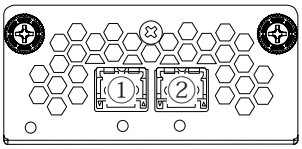

CHB#	①	②	③	④
CHB-21A	1J	3J	5J	7J
CHB-21B	1L	3L	5L	7L
CHB-21E	1N	3N	5N	7N
CHB-21F	1Q	3Q	5Q	7Q
CHB-22A	1K	3K	5K	7K
CHB-22B	1M	3M	5M	7M
CHB-22E	1P	3P	5P	7P
CHB-22F	1R	3R	5R	7R
CHB-31A	2J	4J	6J	8J
CHB-31B	2L	4L	6L	8L
CHB-31E	2N	4N	6N	8N
CHB-31F	2Q	4Q	6Q	8Q
CHB-32A	2K	4K	6K	8K
CHB-32B	2M	4M	6M	8M
CHB-32E	2P	4P	6P	8P
CHB-32F	2R	4R	6R	8R

*C：DKB location details

For SAS connection

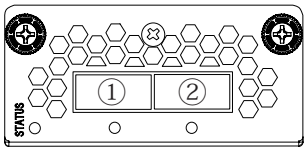

For NVMe connection

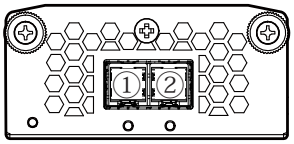

DKB#	①	②
DKB-21D	21D-0	21D-1
DKB-21H	21H-0	21H-1
DKB-22D	22D-0	22D-1
DKB-22H	22H-0	22H-1
DKB-31D	31D-0	31D-1
DKB-31H	31H-0	31H-1
DKB-32D	32D-0	32D-1
DKB-32H	32H-0	32H-1

*D：HIE location details

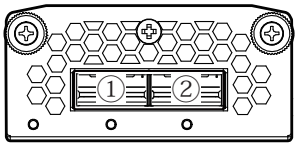

HIE#	①	②
HIE-21C	HIE-21C-0	HIE-21C-1
HIE-21G	HIE-21G-0	HIE-21G-1
HIE-22C	HIE-22C-0	HIE-22C-1
HIE-22G	HIE-22G-0	HIE-22G-1
HIE-31C	HIE-31C-0	HIE-31C-1
HIE-31G	HIE-31G-0	HIE-31G-1
HIE-32C	HIE-32C-0	HIE-32C-1
HIE-32G	HIE-32G-0	HIE-32G-1

3. DKC-4/5

Figure 2-19 Channel Board/Disk Board Location (Rear view of DKC-4/5)

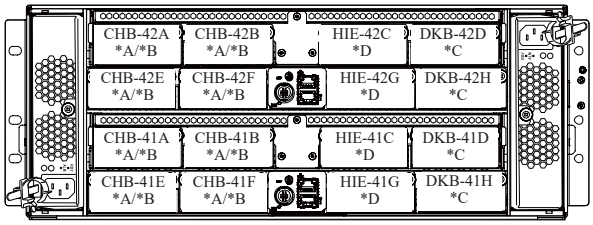

Rear view of DKC-4

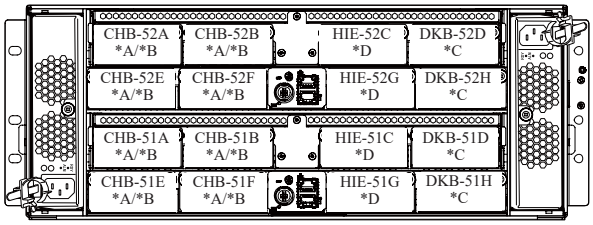

Rear view of DKC-5

*A：CHB (16 Gbps (4 port) FICON/16, 32 Gbps (4 port) FC) location details

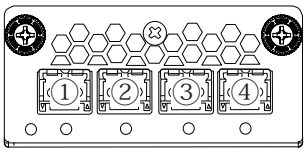

*B：CHB (10 Gbps (2 port) iSCSI) location details

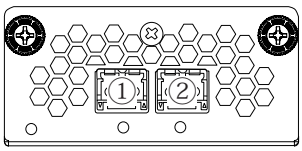

CHB#	①	②	③	④
CHB-41A	9A	BA	DA	FA
CHB-41B	9C	BC	DC	FC
CHB-41E	9E	BE	DE	FE
CHB-41F	9G	BG	DG	FG
CHB-42A	9B	BB	DB	FB
CHB-42B	9D	BD	DD	FD
CHB-42E	9F	BF	DF	FF
CHB-42F	9H	BH	DH	FH
CHB-51A	AA	CA	EA	GA
CHB-51B	AC	CC	EC	GC
CHB-51E	AE	CE	EE	GE
CHB-51F	AG	CG	EG	GG
CHB-52A	AB	CB	EB	GB
CHB-52B	AD	CD	ED	GD
CHB-52E	AF	CF	EF	GF
CHB-52F	AH	CH	EH	GH

*C：DKB location details

For SAS connection

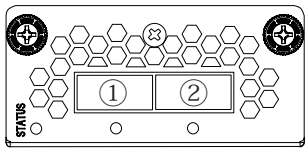

For NVMe connection

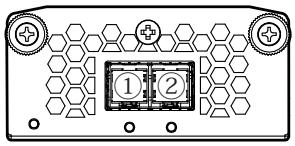

DKB#	①	②
DKB-41D	41D-0	41D-1
DKB-41H	41H-0	41H-1
DKB-42D	42D-0	42D-1
DKB-42H	42H-0	42H-1
DKB-51D	51D-0	51D-1
DKB-51H	51H-0	51H-1
DKB-52D	52D-0	52D-1
DKB-52H	52H-0	52H-1

*D：HIE location details

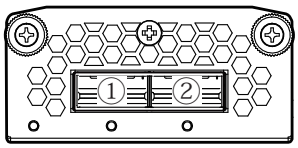

HIE#	①	②
HIE-41C	HIE-41C-0	HIE-41C-1
HIE-41G	HIE-41G-0	HIE-41G-1
HIE-42C	HIE-42C-0	HIE-42C-1
HIE-42G	HIE-42G-0	HIE-42G-1
HIE-51C	HIE-51C-0	HIE-51C-1
HIE-51G	HIE-51G-0	HIE-51G-1
HIE-52C	HIE-52C-0	HIE-52C-1
HIE-52G	HIE-52G-0	HIE-52G-1

2.5.2.4 LAN Board

The following figure shows the LAN board location.

Figure 2-20 LAN Board Location

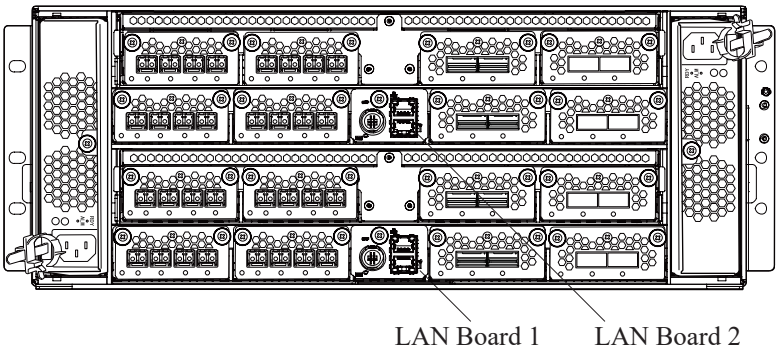

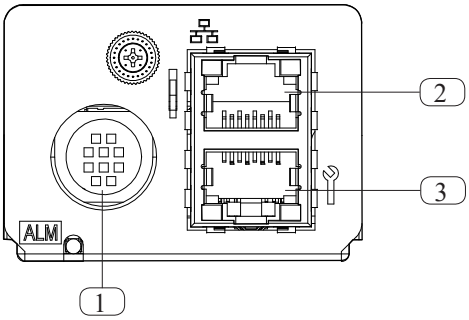

No.	Parts Name	Function
1	Unusable connector	Do not use this connector.
2	Management LAN port	This port is used for communication between CTL and SVP via SSVP.
3	Maintenance LAN port	This port is used for communication between CTL01 and CTL12 for VSP 5100 and VSP 5100H. For VSP 5500 and VSP 5500H, do not use this port.

3. Switches and LEDs

3.1 Switches and LEDs of HSNPANEL

Figure 3-1 show the switch and LEDs of HSNPANEL. Table 3-1 shows the function of the switch and LEDs. Circled numbers in Figure 3-1 correspond to the numbers in Table 3-1.

Figure 3-1 Switch and LEDs of HSNPANEL

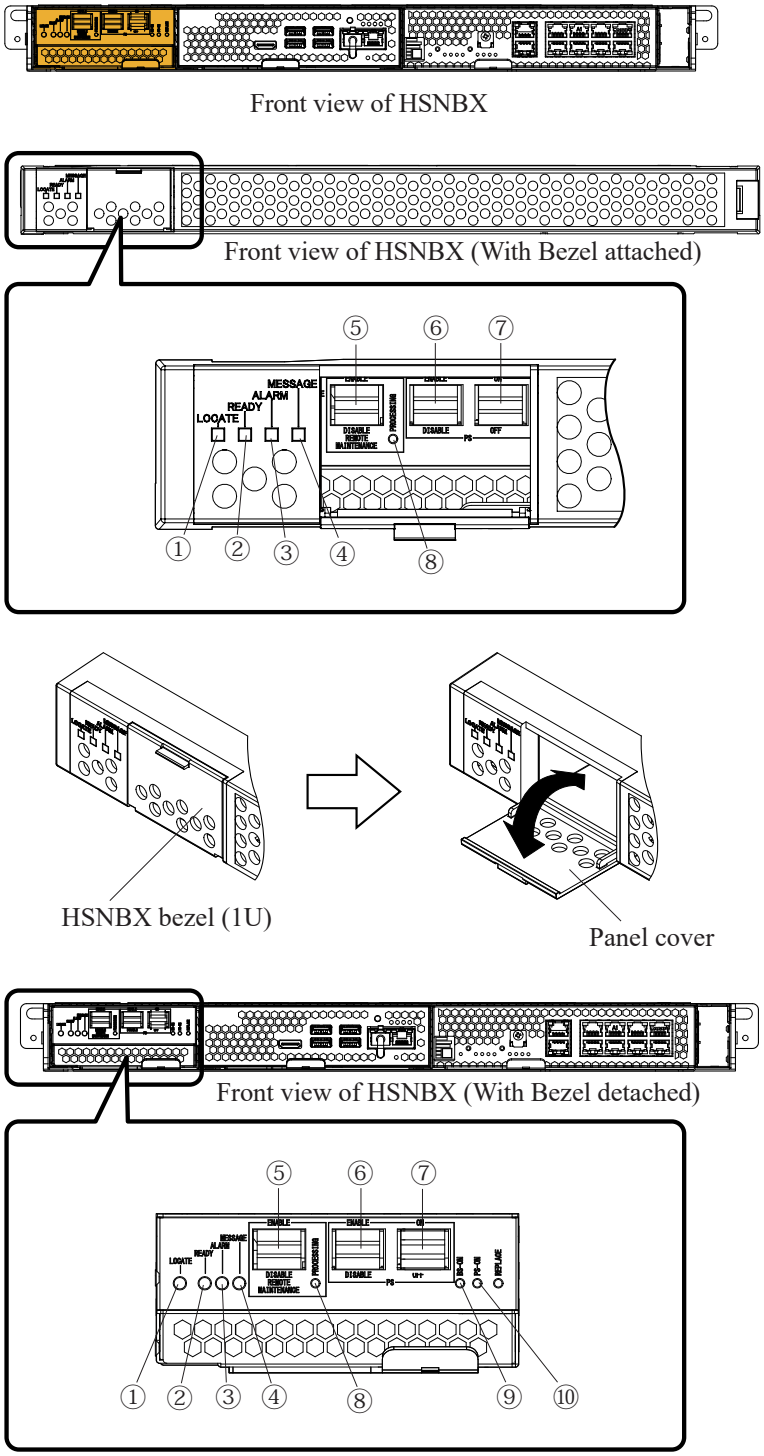

Table 3-1 Function of HSNPANEL LEDs and Switch

No.	Parts Name	Class	Function
1	LOCATE	LED (Amber)	On : The HSNBX needs maintenance. Off : Normal condition (when maintenance is not needed)
2	READY	LED (Green)	On : I/O operation on the channel interface is possible. Off : Not ready
3	ALARM	LED (Red)	On : An MP blockade occurred. NOTE: The LED might not light up depending on the cause or timing of the MP blockade. When checking the occurrence of an MP blockade, also see the ALARM LED on each DKC (see Table 3-8). Off : Not in the alarm status
4	MESSAGE	LED (Amber)	On : The storage system detected a failure, and a SIM related to the failure was reported to the SVP. The LED continues to light until the maintenance personnel changes the SIM attribute to 'complete'. Blinking : • One SVP became faulty in a single SVP configuration. • Two SVPs became faulty in a dual SVP configuration. If one of the two SVPs becomes faulty in a dual SVP configuration, this LED does not blink.
5	REMOTE MAINTENANCE ENABLE/ DISABLE	Switch	Used to enable or disable the remote maintenance of the storage system. ENABLE : Remote maintenance is allowed. DISENABLE : Remote maintenance is not allowed.
6	PS SW ENABLE	Switch	By holding this switch in the ENABLE position, the PS ON/PS OFF switch operation becomes possible.
7	PS ON/PS OFF	Switch	To power on or off the storage system, move this switch while holding the PS SW ENABLE switch in the ENABLE position.
8	REMOTE MAINTENANCE PROCESSING	LED (Amber)	On : Remote maintenance is being operated.
9	BS ON	LED (Amber)	On : The auxiliary power supply in the storage system is powered on.
10	PS ON	LED (Green)	On : The storage system is powered on. Blinking : The power-on or power-off processing is being performed. When an ISW is blocked, the LED might not blink.

(Numbers in this table correspond to the circled numbers in Figure 3-1.)

3.2 Other Switches and LEDs

1. SVP

Figure 3-2 Switches and LEDs of SVP

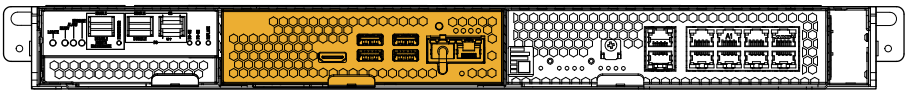

Front view of HSNBX

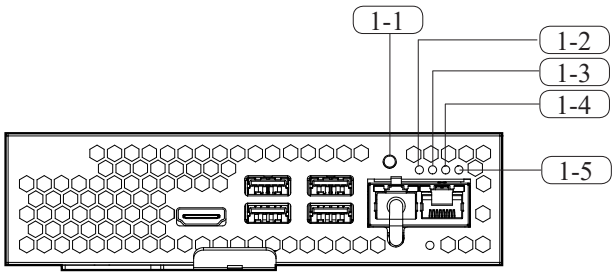

SVP

Table 3-2 Function of SVP Switches and LEDs

No.	Parts Name	Class	Function
1-1	SVP PS ON/OFF	Switch	By pressing this switch for about one second, the SVP is powered on or off. To power off the SVP forcibly, press this switch for five seconds or more. To keep the power of the SVP off for 15 minutes or more, set the SVP RAS switch #1 (see LOC03-40) on the SSVP to ON. To power on the SVP, set the SVP RAS switch #1 to OFF.
1-2	SVP POWER	LED (Green)	The SVP power supply is powered on.
1-3	SVP DCIN	LED (Green)	The SVP is supplied with DC power.
1-4	SVP DRIVE	LED (Green)	The drive in the SVP is being accessed.
1-5	SVP SHUT DOWN	LED (Red)	Removal of the SVP is possible when the storage system is powered on.

(Numbers in this table correspond to the circled numbers in Figure 3-2.)

2. SSVP

Figure 3-3 Switches and LEDs of SSVP

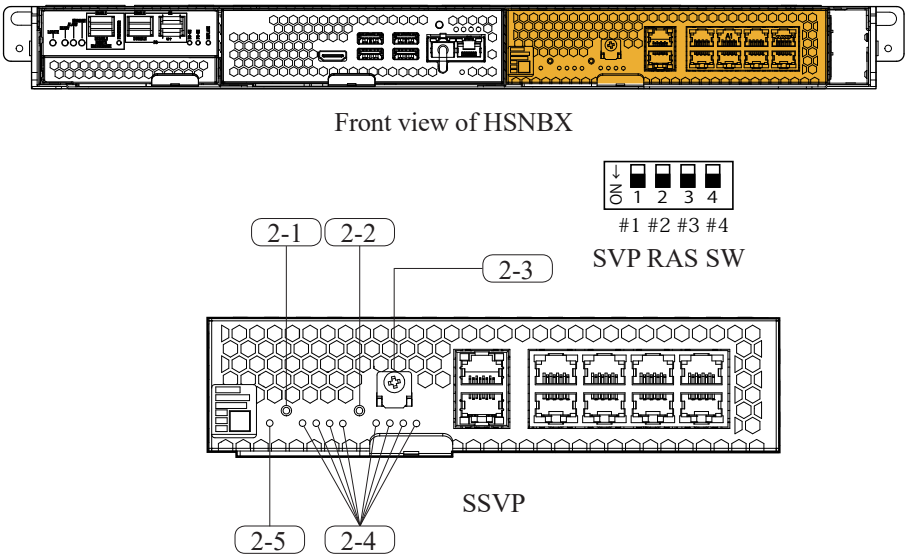

Table 3-3 Function of SSVP Switches and LEDs

No.	Parts Name	Class	Function
2-1	SSVP RESET	Switch (*1)	Used to reset the hardware of the SSVP. Press this switch for 3 seconds or more. It takes about 1 minute to reset the SSVP. The status of the leftmost SVP STATUS LED changes while the SSVP reset is being processed (see Table 3-4).
2-2	SVP RAS SET	Switch (*1)	Used to set the RAS function of the SVP. Use this switch together with the SVP RAS switches #2, #3, and #4 (see Table 3-5).
2-3	SVP RAS	Switch (*1)	#1 : SVP PS ON/OFF INH switch. Setting this switch to ON suppresses the SVP reboot control. #2, #3, and #4 : Used with the SVP RAS SET switch to set the RAS functions of the SVP (see Table 3-5).
2-4	SVP STATUS	LED (Green)	These LEDs are turned on or off by program control via a RAS driver. (1) The LED status represents an SVP type (Master SVP/Standby SVP) as shown below. The left most LED blinks at 1 second intervals when the SVP is operating. The status of the leftmost LED changes during the SSVP reset (see Table 3-4). When a failover occurs, or when the Standby SVP is being replaced, the LED statuses on both SSVPs might represent the Master SVP (the rightmost LED is lighting). For details, see "When SVP STATUS LED statuses on both SSVPs represent the Master SVP". LED status of Master SVP 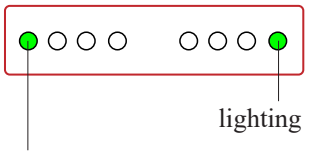 lighting Blinking at 1 second intervals when the SVP is operating LED status of Standby SVP 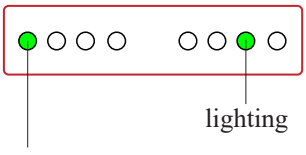 lighting Blinking at 1 second intervals when the SVP is operating (2) The LED status can represent an IP address of the SVP by operating the SVP RAS SET switch on the SSVP (see Table 3-5).
2-5	SSVP REP	LED (Red)	The SSVP is ready to be replaced for maintenance. This LED is lit by SVP control.

(Numbers in this table correspond to the circled numbers in Figure 3-3.)

*1: Use an object with a sharp edge such as a pair of tweezers to manipulate the switches on the SSVP.

LED status during SSVP reset

The table below shows the status change of the leftmost SVP STATUS LED before, during, and after the SSVP reset.

Table 3-4 LED Status Changed by SSVP Reset

Condition	Status of the leftmost SVP STATUS LED
Before SSVP reset	Blinking at 1 second intervals (status in normal operation)
During SSVP reset	(1) Off (for about 30 seconds) after pressing the SVP RESET switch for 3 seconds (2) Off, blinking, or On (for about 30 seconds)
After SSVP reset	Blinking at 1 second intervals (status in normal operation)

RAS functions of SVP

The following functions are available by operating the SVP RAS switches #2, #3, and #4 and the SVP RAS SET switch.

Table 3-5 RAS functions of SVP

• HUB reset • Display of IP address of SVP • Initialization of login password, maintenance password, and IP address of SVP

When SVP STATUS LED statuses on both SSVPs represent the Master SVP

If either of the following is met, SVP STATUS LED statuses on both SSVPs represent the Master SVP:

- Duration from the occurrence of the failover to the completion of the IP address (Standby SVP) settings
- The Standby SVP is being replaced.

To perform the SVP replacement when SVP STATUS LED statuses on both SSVPs represent the Master SVP, identify the target SVP by checking either of the LED statuses shown below.

- The SVP POWER LED is off (meaning that the SVP is powered off).
- The SVP SHUTDOWN LED (red) is on (meaning that the removal of the SVP is possible).

HUB reset

(1) Change the SVP RAS switches #2, #3, and #4 to the following status:

#2	#3	#4	Switch status after change
ON	OFF	OFF	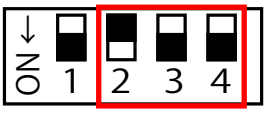

(2) Press the SVP RAS SET switch.

(3) After completing the work, set the SVP RAS switches #2, #3, and #4 to OFF.

Display of IP address of SVP

(1) Change the SVP RAS switches #2, #3, and #4 to the following status:

#2	#3	#4	Switch status after change
ON	OFF	ON	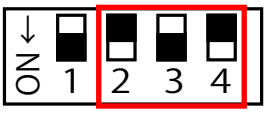

(2) Press the SVP RAS SET switch.

(3) All the SVP STATUS LEDs repeat Off and On as shown below.
Off (for 1 second) → On (for 1 second) → Off (for 1 second) → On (for 1 second)

(4) An IP address of the SVP is represented by lighting patterns of the SVP STATUS LEDs.
Eight bits are represented by eight LEDs. Each octet of an IP address, which is represented by LEDs, is displayed for 3 seconds in order from the first octet to the fourth octet.
For example, when an IP address of the SVP is 126.255.254.15, the lighting patterns of the LEDs are as follows:

First octet (126): ○●●● ●●●○ (Displayed for 3 seconds)
Second octet (255): ●●●● ●●●● (Displayed for 3 seconds)
Third octet (254): ●●●● ●●●○ (Displayed for 3 seconds)
Fourth octet(15): ○○○○ ●●●● (Displayed for 3 seconds)

(5) All the SVP STATUS LEDs are off for 10 seconds.

(6) The SVP STATUS LEDs return to the normal status.

(7) Set the SVP RAS switches #2, #3, and #4 to OFF.

Initialization of login password, maintenance password, and IP address of SVP

The IP address of the SVP after initialization is 126.255.254.15.

NOTE You can cancel the following operation before pressing the SVP RAS SET switch in Step (4).
To cancel the operation, press the SSVP RESET switch for 3 seconds or more to reset the SSVP.

(1) Change the SVP RAS switches #2, #3, and #4 to the following status:

#2	#3	#4	Switch status after change
ON	ON	ON	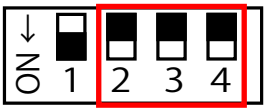

(2) Press the SVP RAS SET switch.

(3) Change the SVP RAS switches #2, #3, and #4 to the following status:

#2	#3	#4	Switch status after change
ON	OFF	OFF	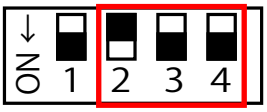

(4) Press the SVP RAS SET switch.

(5) All the SVP STATUS LEDs repeat Off and On as shown below.
Off (1 second) → On (1 second) → Off (1 second) → On (1 second)

(6) An IP address of the SVP before initialization is represented by lighting patterns of the SVP STATUS LEDs.
Eight bits are represented by eight LEDs. Each octet of an IP address, which is represented by LEDs, is displayed for 3 seconds in order from the first octet to the fourth octet.
For example, when an IP address of the SVP before initialization is 126.20.122.15, the lighting patterns of the LEDs are as follows:

First octet (126): ○ ● ● ● ● ● ● ○ (Displayed for 3 seconds)
Second octet (20): ○ ○ ○ ● ○ ● ○ ○ (Displayed for 3 seconds)
Third octet (122): ○ ● ● ● ● ○ ● ○ (Displayed for 3 seconds)
Fourth octet(15): ○ ○ ○ ○ ● ● ● ● (Displayed for 3 seconds)

(7) All the SVP STATUS LEDs are off for 10 seconds.
(8) The login password, maintenance password, and IP address of the SVP are initialized.
(9) All the SVP STATUS LEDs blink at 1 second intervals for 20 seconds.
(10) The SVP revoots
(11) After completing the work, set the SVP RAS switches #2, #3, and #4 to OFF.

3. ISW

Figure 3-4 LEDs of ISW

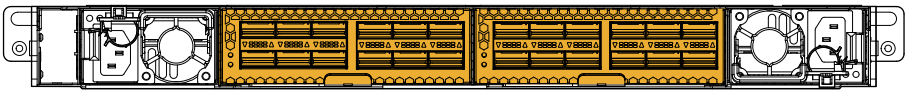

Rear view of HSNBX

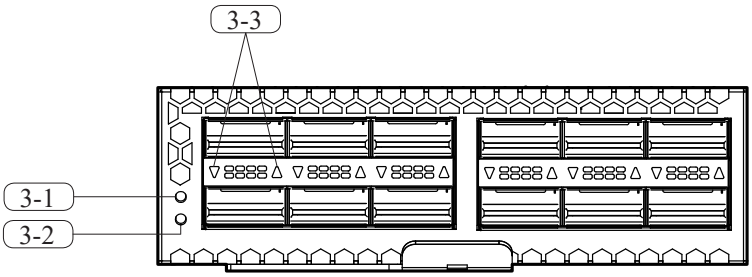

ISW

Table 3-6 Function of ISW LEDs

No.	Parts Name	Class	Function
3-1	ALARM	LED (Red)	On : An abnormality has occurred.
3-2	POWER	LED (Green)	On : The ISW is powered on.
3-3	PORT	LED (Red/ Amber/ Green)	On (Red) : The cable needs maintenance. Blinking (Red) : Abnormal state (not linked state) Blinking (Amber/Green) : Abnormal state (linked state) On (Green) : Normal state (linked state) Off : Link down state.

(Numbers in this table correspond to the circled numbers in Figure 3-4.)

4. ISWPS

Figure 3-5 LEDs of ISWPS

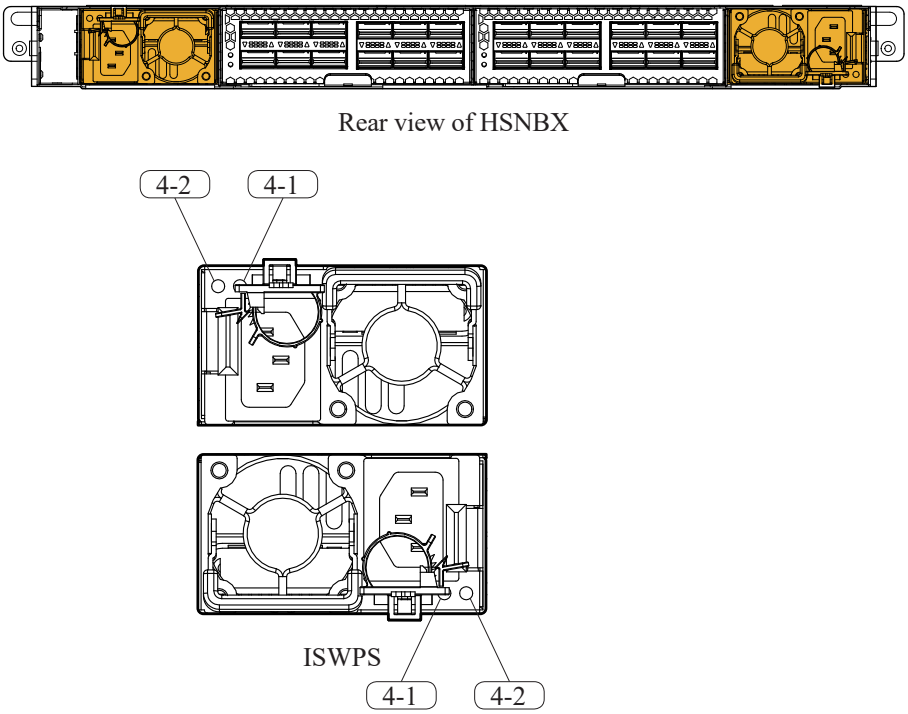

Table 3-7 Function of ISWPS LEDs

No.	Parts Name	Class	Function
4-1	ALM/RDY	LED (Green/ Red)	Red : The ISWPS is ready to be replaced. To replace it, see “ISWPS REPLACEMENTPROCESSING” (REP(RIPS)01-10). Green : The ISWPS is operating normally.
4-3	PORT	LED (Blue)	On : AC input is normal.

(Numbers in this table correspond to the circled numbers in Figure 3-5.)

5. DKC

Figure 3-6 Switch and LEDs of DKC

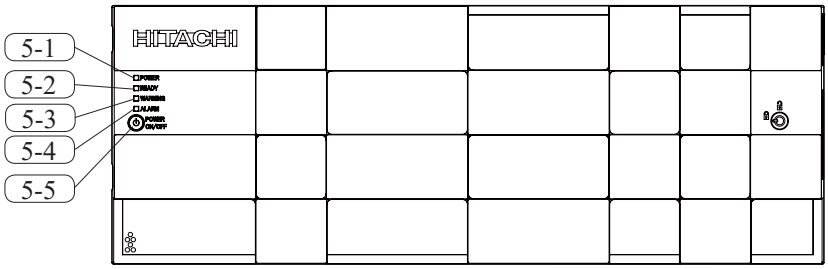

Front view of DKC (With Front Bezel attached)

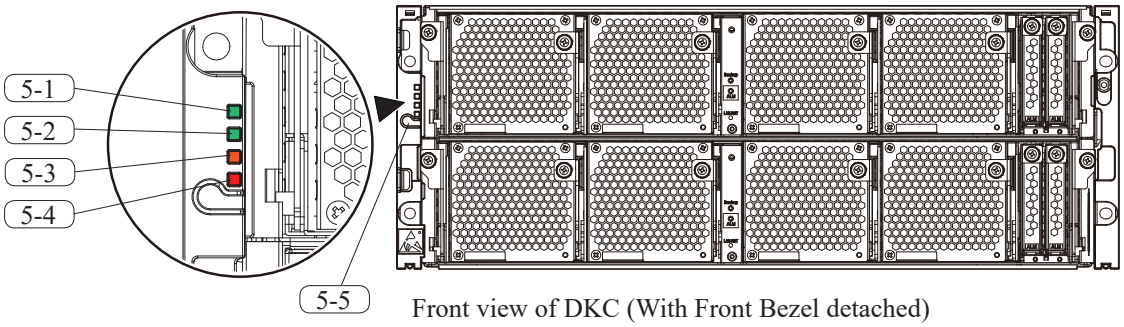

Front view of DKC (With Front Bezel detached)

Table 3-8 Function of DKC LEDs and Switch

No.	Parts Name	Class	Function
5-1	POWER	LED (Green)	On : The DKC power supplies are in the on state. Off : Power is not supplied to the DKC. If the ALARM LED is on, the DKC is down.
		LED (Amber)	On : The DKC power supplies are in the standby state.
5-2	READY	LED (Green)	On : The DKC is ready to operate. Blinking : In preparation to be ready.
5-3	LOCATE	LED (Amber)	On : The DKC needs maintenance. Off : Normal condition (when maintenance is not needed) • The LED can be lit/turned off by Maintenance Utility. (See “Turn on/off Locate LEDs” (MU02-40).)
5-4	ALARM	LED (Red)	On : An MP blockade occurred. NOTE: The LED might not light up depending on the cause or timing of the MP blockade. When checking the occurrence of an MP blockade, also see the ALARM LED on HSNPANEL (see Table 3-1).
5-5	POWER ON/OFF	Switch	Pressing this switch for about 10 seconds when the storage system is in the PS OFF state turns on/off the power of the DKC. When the storage system is in the PS ON state, the switch operation is disabled. NOTE: Making the DKC power supplies in the standby state by the power-off operation of this switch can suppress the power consumption of the DKC.

(Numbers in this table correspond to the circled numbers in Figure 3-6.)

6. Controller Board

Figure 3-7 LEDs of Controller Board (CTL)

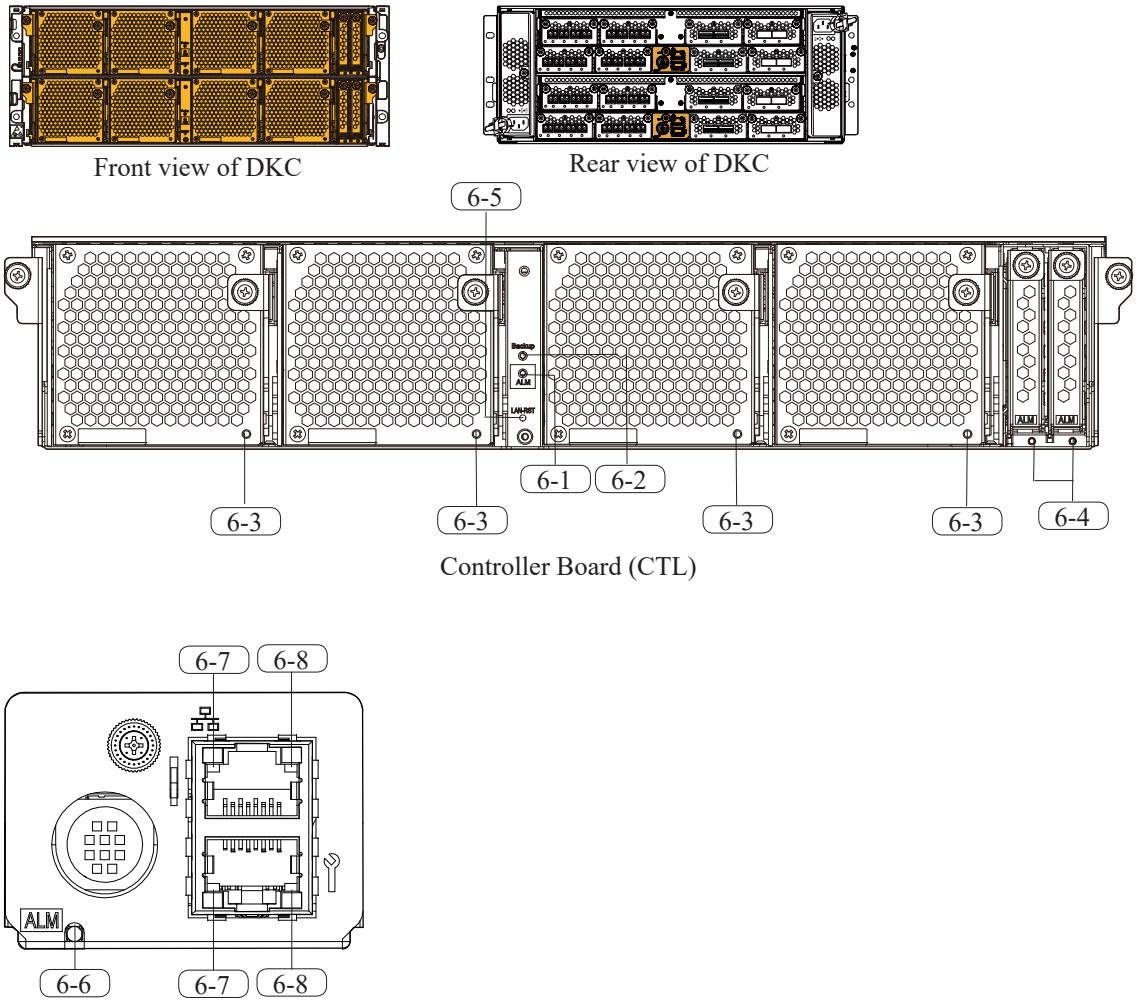

Table 3-9 Function of Controller Board (CTL) LEDs

No.	Parts Name	Class	Function
6-1	CTL ALM	LED (Red)	On : The controller board is ready to be removed (when the maintenance work requiring insertion and removal of the controller board is performed) (this LED might not light up depending on the failure). A failure is detected in the controller board (when the maintenance work mentioned above is not performed). For details, see "Blinking or lighting up of LED (red) on CTL ALM" (TRBL02-03-40). Blinking : A failure is detected in the controller board, cache memory, or cache flash memory (CFM). For details, see "Blinking or lighting up of LED (red) on CTL ALM" (TRBL02-03-40).
		LED (Amber)	On : Indicates that the LAN RESET switch is pressed.
6-2	BACKUP STS	LED (Green)	On : Indicates that power outage has occurred or power restoration is in progress after power outage. High-speed blinking (On and off are repeated at 0.1-second intervals.) : The data is being restored. Low-speed blinking (On and off are repeated at 0.5-second intervals.) : A planned power off is being executed or the data is being stored.
6-3	STATUS	LED	Off : Battery is uninstalled, abnormally installed or BKMF firmware is replaced (in case of a configuration with no battery installed, the LEDs for BKMF-10 and BKMF-20 go out).
		LED (Green)	On : Battery is fully charged. Blinking : Battery is charged or discharged.
		LED (Red)	On : BKMF can be removed. BKMF is abnormal. Blinking : BKMF can be removed. A failure occurred in the Battery, or preventive maintenance replacement of the Batteries is possible.
6-4	ALARM	LED (Red)	On : A status where Cache Flash Memories are removable.
6-5	LAN-RST	Switch	This is a switch for GUM reset. If GUM reboot fails, reset GUM forcibly from the hardware. See "Resetting GUM" (MU02-180) for how to use it.
6-6	LAN ALARM LED	–	Not used.
6-7	ACT/LINK LED	LED (Amber)	Link status/data transfer status.
6-8	SPEED LED	LED (Green)	On : Link speed = 1 Gbps Off : Link speed = 10 Mbps/100 Mbps

(Numbers in this table correspond to the circled numbers in Figure 3-7.)

7. Channel Board (FC/iSCSI/FICON)

Figure 3-8 LEDs of Channel Board (FC/iSCSI/FICON)

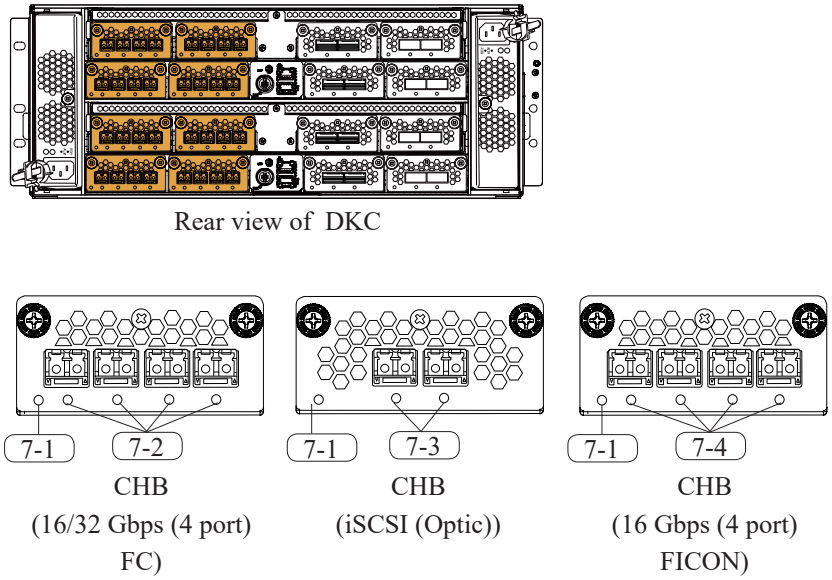

Table 3-10 Function of Channel Board (FC/iSCSI/FICON) LEDs

No.	Parts Name	Class	Function
7-1	STATUS	LED (Green)	On : Power on
		LED (Red)	On : Abnormal
		LED	Off : Power off
7-2	PORT	LED (Red)	On : SFP is abnormal.
		LED (Blue)	On : 16 Gbps FC : Link status is normal. (16 Gbps) (*1) 32 Gbps FC : Link status is normal. (32 Gbps) (*2)
		LED (Green)	On : 16 Gbps FC : Link status is normal. (4 Gbps or 8 Gbps) (*1) : 32 Gbps FC : Link status is normal. (8 Gbps or 16 Gbps) (*2)
		LED	Off : Link down/not Ready.
7-3	PORT	LED (Red)	On : SFP is abnormal.
		LED (Blue)	On : Link status is normal. (10 Gbps) Blinking : The status is communicating. (10 Gbps)
		LED	Off : Link down/not Ready.
7-4	PORT	LED (Red)	On : SFP is abnormal.
		LED (Blue)	On : Link status is normal. Low-speed blinking (On and off are repeated at 0.5-second intervals.) : Ready status is normal. High-speed blinking (On and off are repeated at 0.125-second intervals.) : The status is communicating.
		LED	Off : Link down/not Ready.

(Numbers in this table correspond to the numbers in ovals in Figure 3-8.)

*1: When using the 32 Gbps FC Ready CHB in which the 16 Gbps SFP is installed.

*2: When using the 32 Gbps FC Ready CHB in which the 32 Gbps SFP is installed.

8. Disk Board (DKB)

Figure 3-9 LEDs of Disk Board

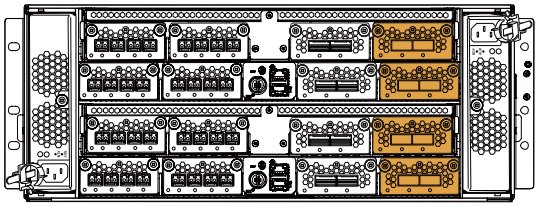

Rear view of DKC

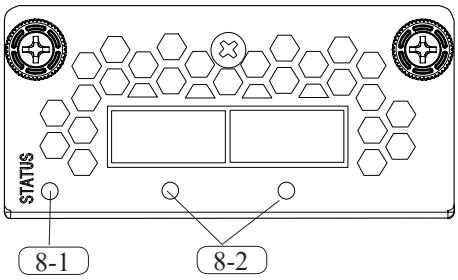

Disk Board for SAS connection

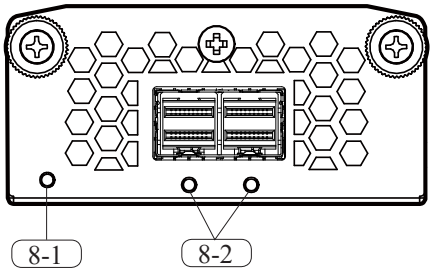

Disk Board for NVMe connection

Table 3-11 Function of Disk Board LEDs

No.	Parts Name	Class	Function
8-1	STATUS	LED (Green/Red)	Green : Power on Red : Disk Board can be removed. Off : Power off
8-2	PORT (LINK)	LED (Blue)	Blue : Link status Off : Link down

(Numbers in this table correspond to the numbers in ovals in Figure 3-9.)

9. HIE

Figure 3-10 LEDs of HIE

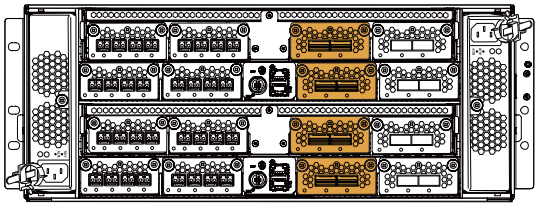

Rear view of DKC

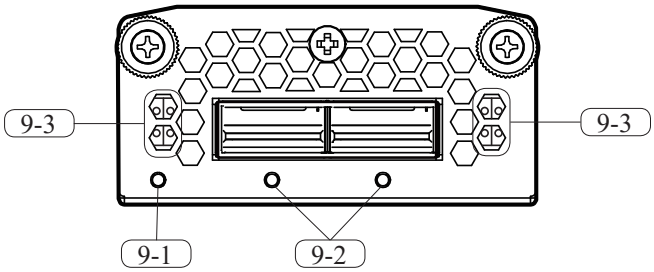

HIE

Table 3-12 Function of HIE LEDs

No.	Parts Name	Class	Function	
9-1	STATUS	LED (Green/Red)	On (Green)	: The HIE is powered on.
			On (Red)	: The HIE is ready to be removed.
			Off	: The HIE is powered off.
9-2	PORT (LINK/LOCATE)	LED (Blue/Red)	On (Blue)	: Linked state.
			Blinking (Red)	: A failure has occurred. The port is blocked.
			On (Red)	: The cable is ready to be removed.
			Off	: Link down state.
9-2	General-purpose	LED (Yellow)	Blinking (Yellow)	: The target port is incorrectly connected.
			On (Yellow)	: Any of the ports is incorrectly connected, or a failure occurs in HIE/Controller Board.

(Numbers in this table correspond to the numbers in ovals in Figure 3-10.)

- Lighting patterns of LEDs on the HIE when the Controller Board starts up
  When the power is turned on and when the Controller Board is maintained, the LEDs on the HIE light in the following patterns:

(1) Normal start-up

#	Time	STATUS LED	PORT LED	General-purpose LED	Remarks
1	For up to 120 sec.	Off	Off	Off	
2	For up to 2 sec.			On (Yellow)	
3	For up to 30 sec.	On (Green)	Blinking (Red)	Off	
4	-		On (Blue)		In the case of a normal start-up, this lighting state continues.

NOTE: #1 to #4 might be repeated in order from #1 until the Controller Board starts up normally.

(2) Abnormal start-up

#	Time	STATUS LED	PORT LED	General-purpose LED	Remarks
1	For up to 120 sec.	Off	Off	Off	
2	For up to 2 sec.			On (Yellow)	
3	For up to 300 sec.	On (Green)	Blinking (Red)	Off	In the case of a loose connection, X-path cable failure, HIE failure, or ISW failure
4	For up to 10 sec.			Blinking (Yellow)/ On (Yellow)	In the case of wrong connections or wrong HSNBX-ID jumper setting

NOTE:
- When all the four X-paths connected to a Controller Board are abnormal, the Controller Board does not start up.
  #1 to #4 are repeated in order from #1 until cable connections/jumper setting are corrected.
- When some X-paths connected to a Controller Board are abnormal (wrong connections or failure), the Controller Board starts up in the state of #3 or #4.
- When there is any abnormality, correct the abnormality according to “Flow of failed part isolation” (TRBL02-03-10).

10. DKCPS

Figure 3-11 LEDs of DKCPS

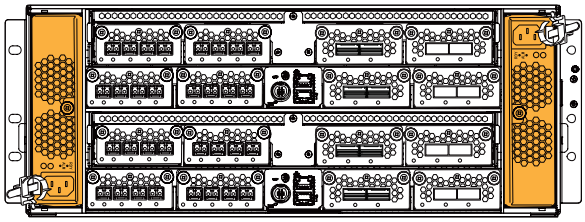

Rear view of DKC

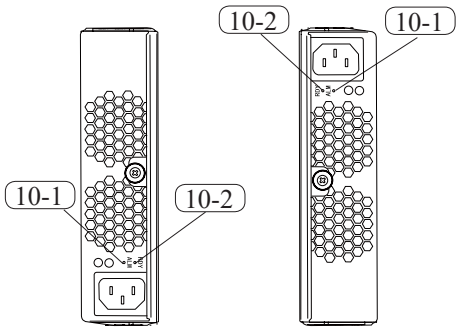

DKCPS1 DKCPS2

DKCPS

Table 3-13 Function of DKCPS LEDs

No.	Parts Name	Class	Function
10-1	ALM	LED (Red)	Indicates that replacement of the DKCPS is possible.
10-2	RDY	LED (Green)	Indicates that the DKCPS operates normally.

(Numbers in this table correspond to the numbers in ovals in Figure 3-11.)

11. SBX/UBX/NBX and Drive

Figure 3-12 LEDs of SBX/UBX/NBX and Drive

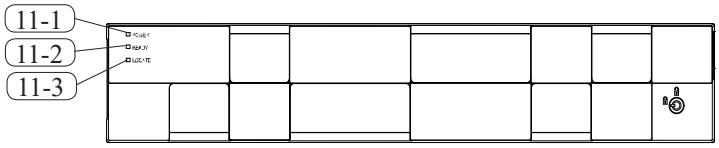

SBX/UBX/NBX Front Bezel

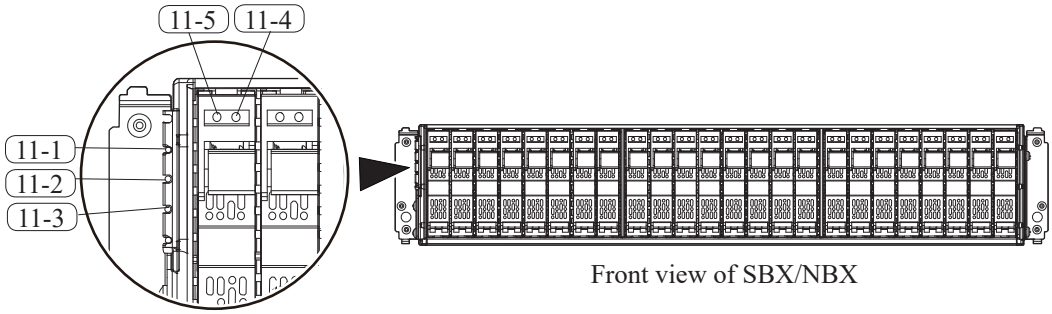

Front view of SBX/NBX

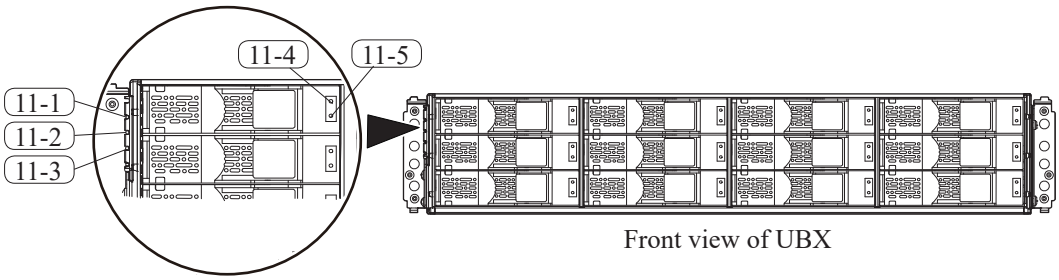

Front view of UBX

Table 3-14 Function of SBX/UBX/NBX and Drive LEDs

No.	Parts Name	Class	Function
11-1	POWER	LED (Green)	Indicates that the power supply is supplied to the storage system.
11-2	READY	LED (Green)	Indicates that the ENC is operating normally.
11-3	LOCATE	LED (Amber)	• Indicates the location of the chassis that detects a failure. • The LED can be lit/turned off by Maintenance Utility. (See “Turn on/off Locate LEDs” (MU02-40).)

(To be continued)

(Numbers in this table correspond to the numbers in ovals in Figure 3-12.)

(Continued from preceding page)

No.	Parts Name	Class	Function
11-4	ACT	LED (Green)	For SAS drive: Indicates the HDD/SSD status. On : Indicates that the HDD/SSD is powered on. NOTE: The ACT LED on an SSD might temporarily go in the off state (for up to 6 hours), but it is not abnormal. If the SSD is accessed, the LED state changes from off to blinking. Blinking : Indicates that the HDD/SSD is active. NOTE: The LED blinking interval might differ among HDD/SSD models, but it is not abnormal. For NVMe drive: The action of the LED differs depending on the status of the NVMe drive. For details, see Table 3-15.
11-5	ALM	LED (Red)	Indicates that the removal of the HDD/SSD is possible when the storage system is powered on. To remove the HDD/SSD, see “Replacing a Drive” (REP(RDK1)02-10).

(Numbers in this table correspond to the numbers in ovals in Figure 3-12.)

NOTE: At the time of start-up of the storage system, replacement of ENC/DKBN, and so on, the LOCATE LED and the ALM LED might blink. However, there is no problem.

Table 3-15 Action of ACT LED for NVMe Drive

NVMe Drive status	Normal	Abnormal
After insert	Undefined	Undefined
Ready	Solid on	
IO/LDEV Format	Blinking	
Format (Erase)		
PS-Off	Solid off	
Blockade		
BS-Off/On	Undefined	

The interval of blinking may be different in NVMe SSD model, but it is not abnormal

12. ENC (SBX/UBX/NBX)

Figure 3-13 LEDs of ENC

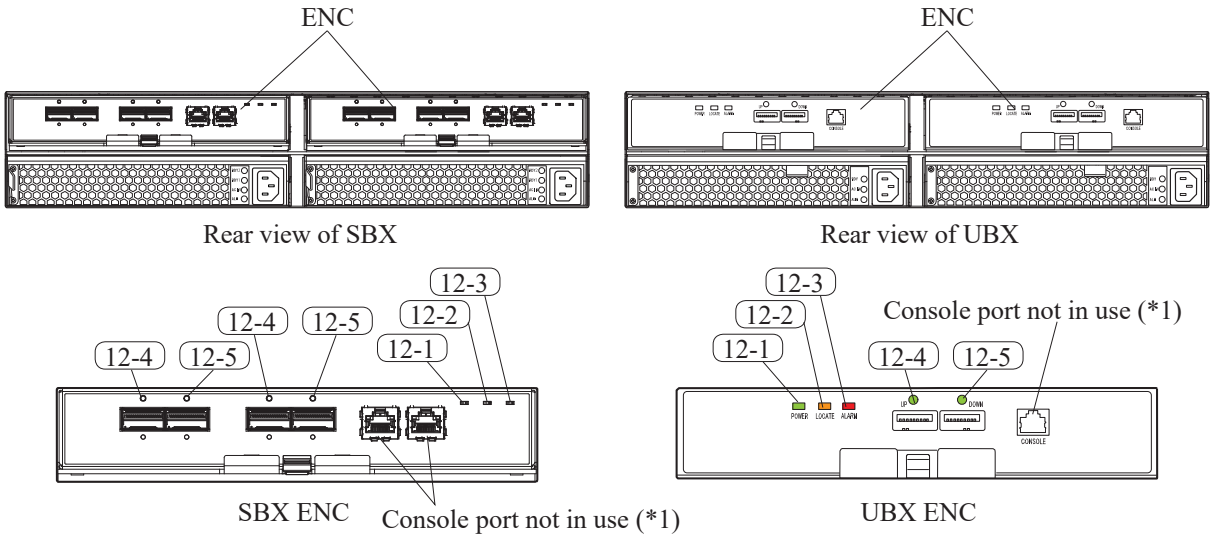

*1: Do not connect a cable to the console port. Otherwise, a failure might occur.

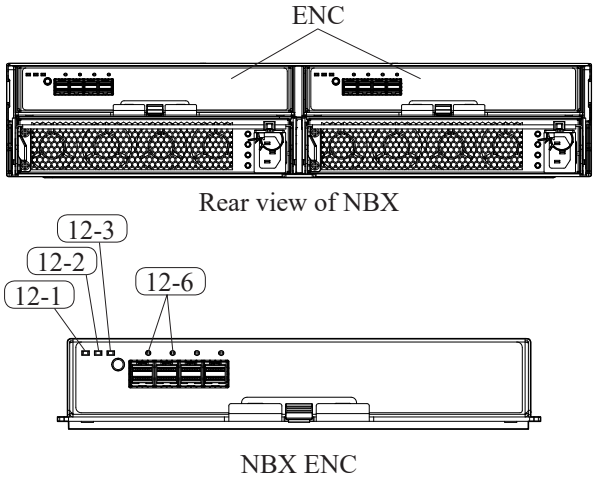

Table 3-16 Function of ENC LEDs

No.	Parts Name	Class	Function
12-1	POWER	LED (Green)	Indicates that the power is supplied to the ENC.
12-2	LOCATE	LED (Amber)	• A LED to specify the chassis location on the rear of the chassis. • The LED can be lit/turned off by Maintenance Utility. (See “Turn on/off Locate LEDs” (MU02-40).)
12-3	ALARM (REPLACE)	LED (Red)	Lights up when replacement of the ENC is possible. To replace the ENC, see “ENC REPLACEMENT PROCESSING” (REP(RENC)01-10).
12-4	PATH (IN side)	LED (Green)	Indicates that IN side is linked up.
12-5	PATH (OUT side)	LED (Green)	Indicates that OUT side is linked up.
12-6	Link	LED (Blue)	Indicates that PCIe between DKBN and ENC is linked up.

(Numbers in this table correspond to the numbers in ovals in Figure 3-13.)

13. DBPS (SBX/NBX)

Figure 3-14 LEDs of DBPS

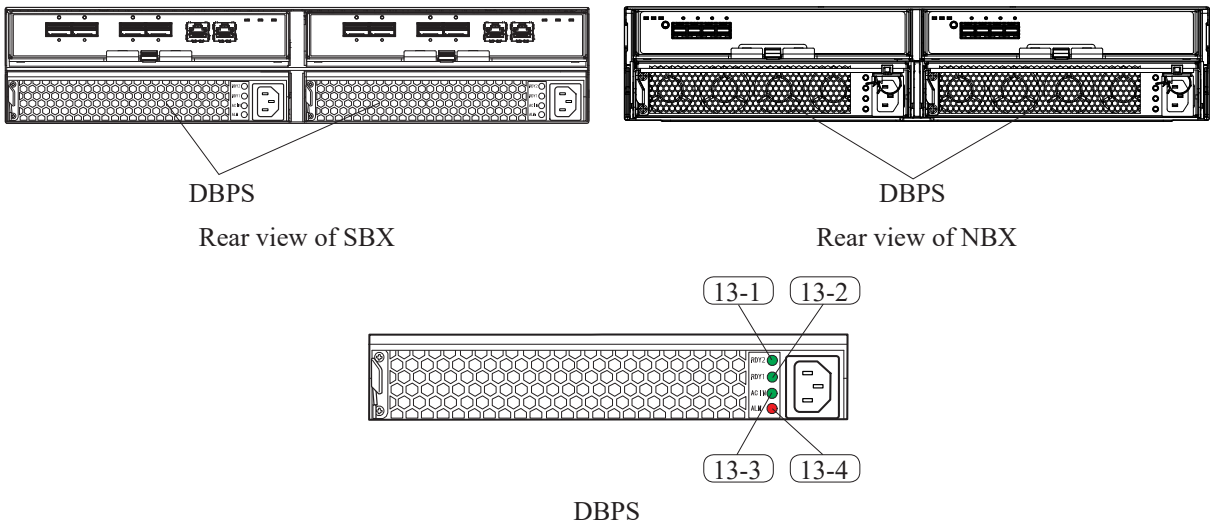

Table 3-17 Function of DBPS LEDs

No.	Parts Name	Class	Function
13-1	RDY2	LED (Green)	Indicates the operation state of the DBPS. On : Normal operation Off : Abnormal operation or out of operation
13-2	RDY1	LED (Green)	Indicates the operation state of the DBPS. On : Normal operation Off : Abnormal operation or out of operation
13-3	AC IN	LED (Green)	Lighting: Indicates that AC input is normal.
13-4	ALM (REPLACE)	LED (Red)	Lights up when replacement of the DBPS is possible. To replace the DBPS, see “Replacing a Power Supply (DBPS) for Drive Box” (REP(RPSU)02-10).

(Numbers in this table correspond to the numbers in ovals in Figure 3-14.)

NOTE: At the time of start-up of the storage system, replacement of ENC/DKBN, and so on, the ALM LED might blink. However, there is no problem.

14. DBPS (UBX)

Figure 3-15 LEDs of DBPS

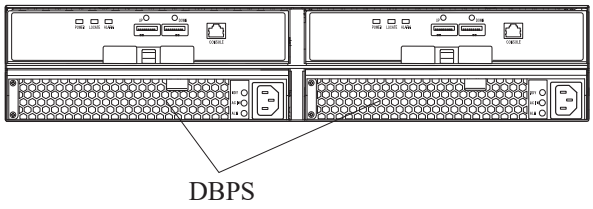

Rear view of UBX

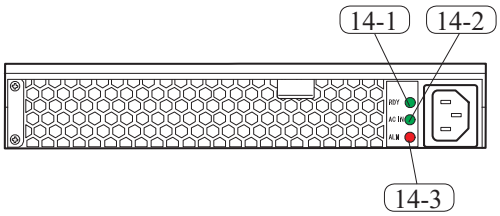

DBPS

Table 3-18 Function of DBPS LEDs

No.	Parts Name	Class	Function
14-1	RDY	LED (Green)	Indicates the operation state of the DBPS. On : Normal operation Off : Abnormal operation or out of operation
14-2	AC IN	LED (Green)	Lighting: Indicates that AC input is normal.
14-3	ALM (REPLACE)	LED (Red)	Lights up when replacement of the DBPS is possible. To replace the DBPS, see “Replacing a Power Supply (DBPS) for Drive Box” (REP(RPSU)02-10).

(Numbers in this table correspond to the numbers in ovals in Figure 3-15.)

15. FBX and Flash Module Drive

Figure 3-16 LEDs of Drive Box and Flash Module Drive

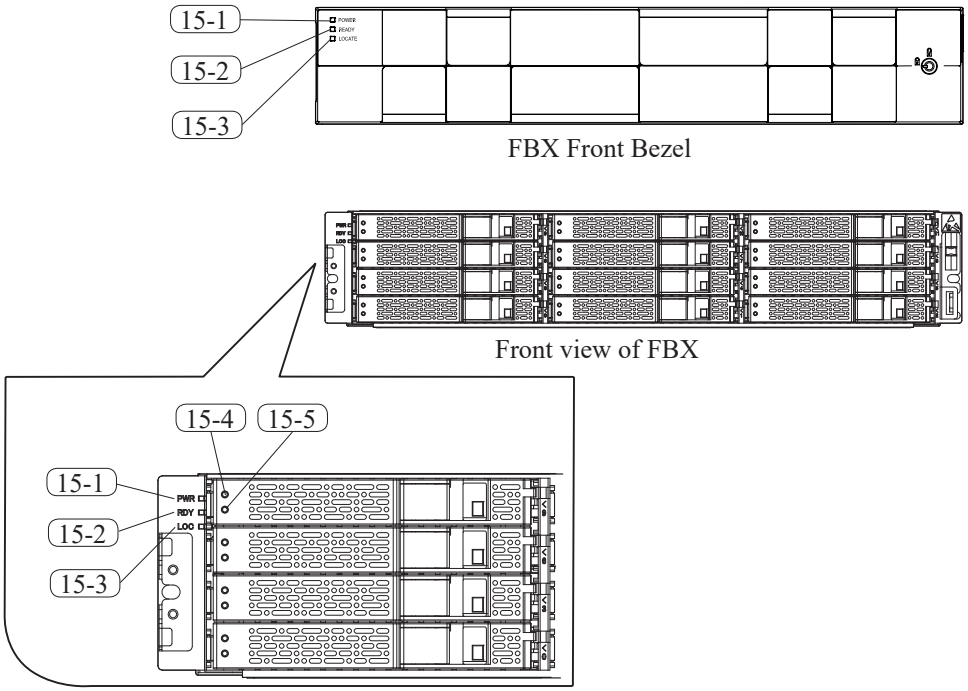

Table 3-19 Function of Drive Box and Flash Module Drive LEDs

No.	Parts Name	Class	Function
15-1	POWER	LED (Green)	Indicates that the power is supplied to the storage system.
15-2	READY	LED (Green)	Indicates that the ENC is operating normally.
15-3	LOCATE	LED (Amber)	• Indicates the location of the chassis that detects a failure. • The LED can be lit/turned off by Maintenance Utility. (See “Turn on/off Locate LEDs” (MU02-40).)
15-4	FMD ACTIVE	LED (Green)	This LED indicates the Flash Module Drive status. • Lighting: Indicates that Flash Module Drive power is on. • Blinking: Indicates that Flash Module Drive is operating. (Lights up with I/O and goes out with no I/O) There is no problem if each Flash Module Drive has a different LED blinking cycle. • Low-speed blinking (1.5-second lighting, 1.5-second lights-out) : Indicates that the Flash Module Drive is in the process of startup. When powered, the LED blinks for about 2 to 5 minutes until the startup processing is complete.
15-5	ALM	LED (Red)	Indicates that the Flash Module Drive is removable with the storage system turned on. To remove the Flash Module Drive, see “DRIVE REPLACEMENT PROCESSING” (REP(RDK1)01-10).

(Numbers in this table correspond to the numbers in ovals in Figure 3-16.)

16. ENC (FBX)

Figure 3-17 LEDs of ENC

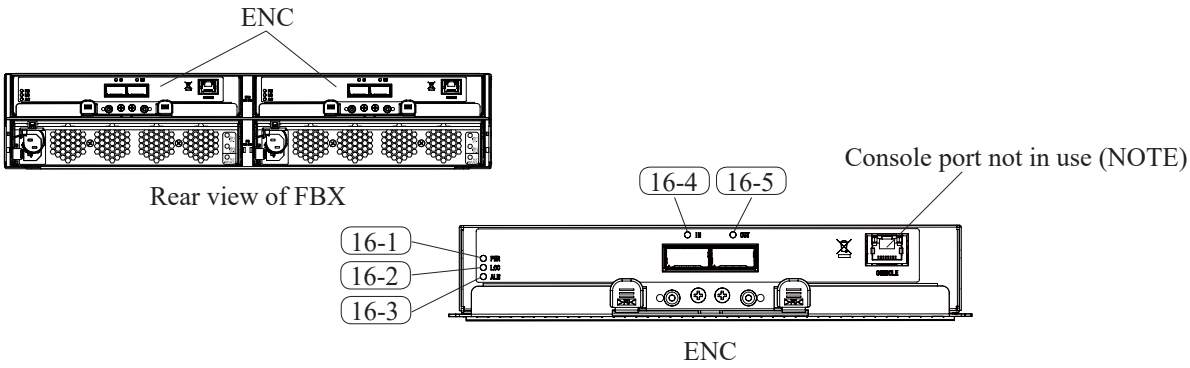

NOTE: Do not connect a cable to the console port. Otherwise, a failure might occur.

Table 3-20 Function of ENC LEDs

No.	Parts Name	Class	Function
16-1	POWER	LED (Green)	Indicates that the power supply is supplied to ENC.
16-2	LOCATE	LED (Amber)	• A LED to specify the chassis location on the rear of the chassis. • The LED can be lit/turned off by Maintenance Utility. (See “Turn on/off Locate LEDs” (MU02-40).)
16-3	ALARM (REPLACE)	LED (Red)	Lights up when replacement of the ENC is possible. To replace the ENC, see “ENC REPLACEMENT PROCESSING” (REP(RENC)01-10).
16-4	PATH (IN side)	LED (Green)	Indicates that the IN side is linked up.
16-5	PATH (OUT side)	LED (Green)	Indicates that the OUT side is linked up.

(Numbers in this table correspond to the numbers in ovals in Figure 3-17.)

17. DBPS (FBX)

Figure 3-18 LEDs of DBPS

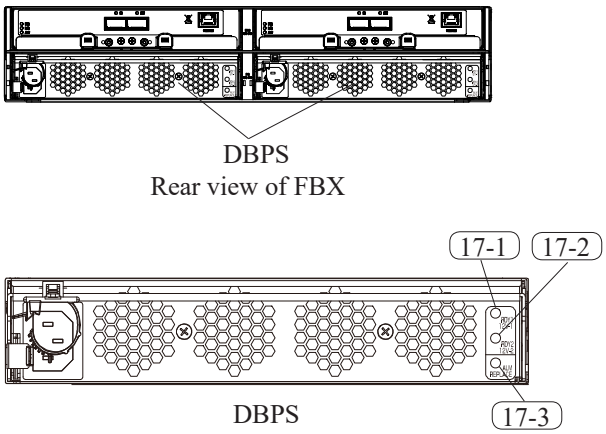

Table 3-21 Function of DPBS LEDs

No.	Parts Name	Class	Function
17-1	RDY 1	LED (Green)	This LED is on each power supply and lights up when the power is supplied from the power supply to the load or the supply is possible.
17-2	RDY 2	LED (Green)	This LED is on each power supply and lights up when the power is supplied from the power supply to the load or the supply is possible.
17-3	ALM REPLACE	LED (Red)	Lights up when replacement of the DBPS is possible. To replace the DBPS, see “PSU REPLACEMENT PROCESSING” (REP(RPSU)02-10).

(Numbers in this table correspond to the numbers in ovals in Figure 3-18.)

3.3 Circuit Breaker

3.3.1 Location of Circuit Breaker

Figure 3-19 shows the location of the circuit breaker in the rack frame.

Figure 3-19 Location of Circuit Breaker in Rack Frame

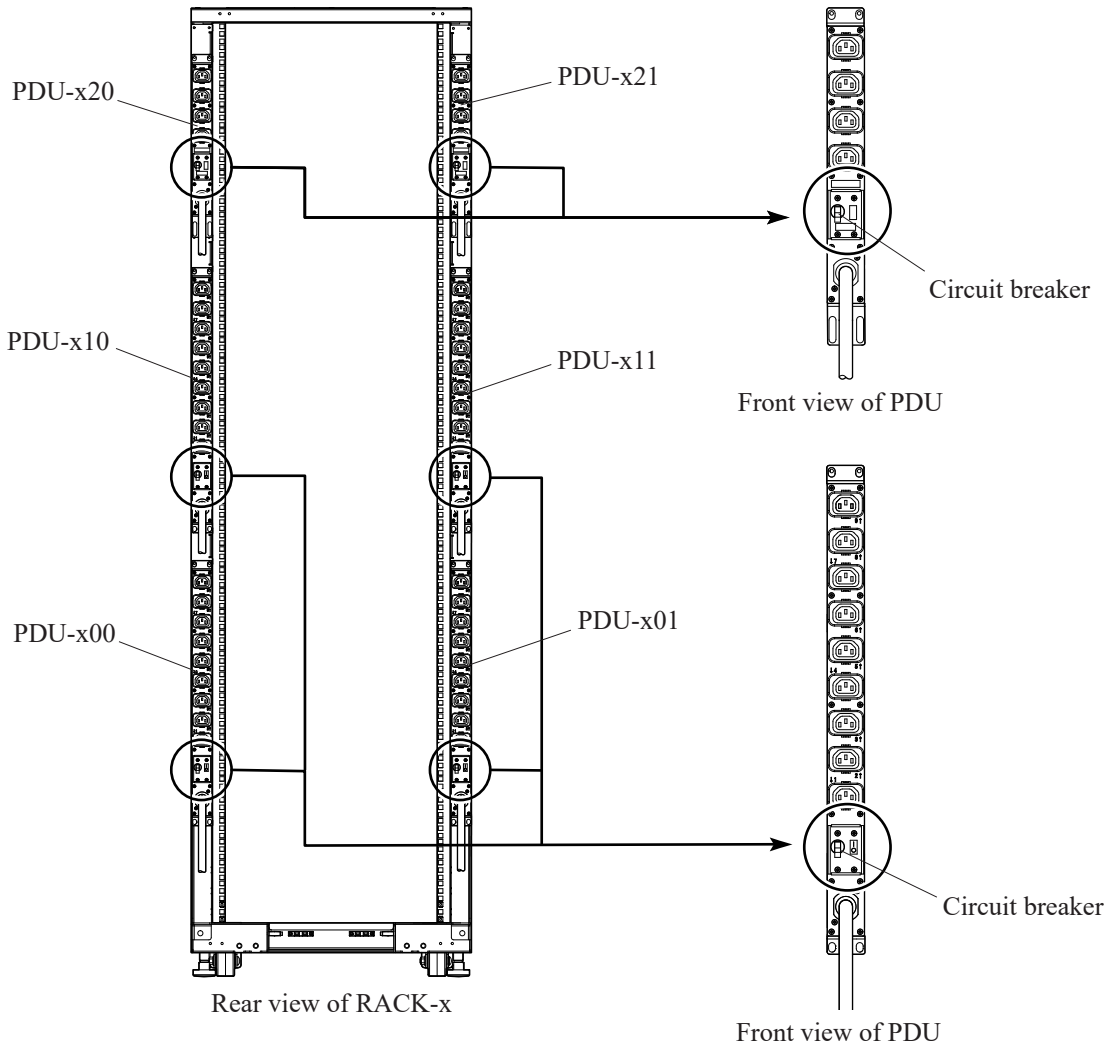

4. Connection of External Cable

4.1 Channel Interface

1. Channel Board
   Port numbers on Channel Boards and MPU locations are as follows:

Figure 4-1 Port Numbers on Channel Boards (16 Gbps (4 Port) FICON/16, 32 Gbps (4 Port) FC) and MPU Locations (1/2)

CHB Port Number

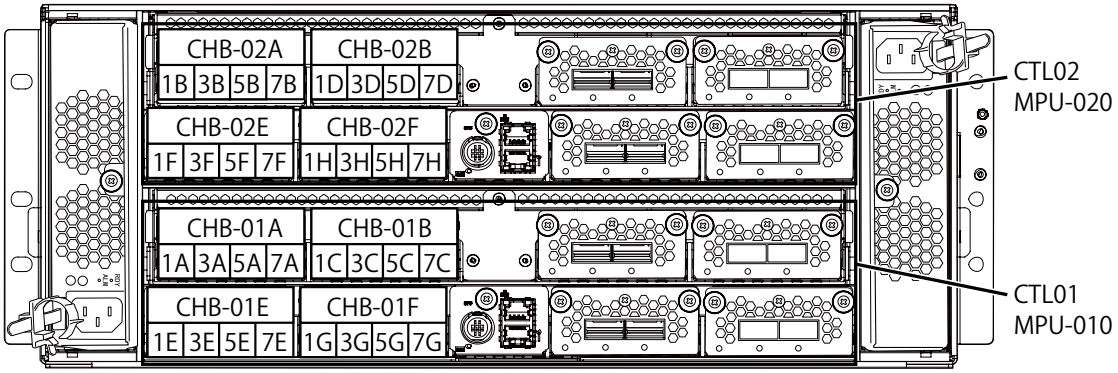

Rear view of DKC-0

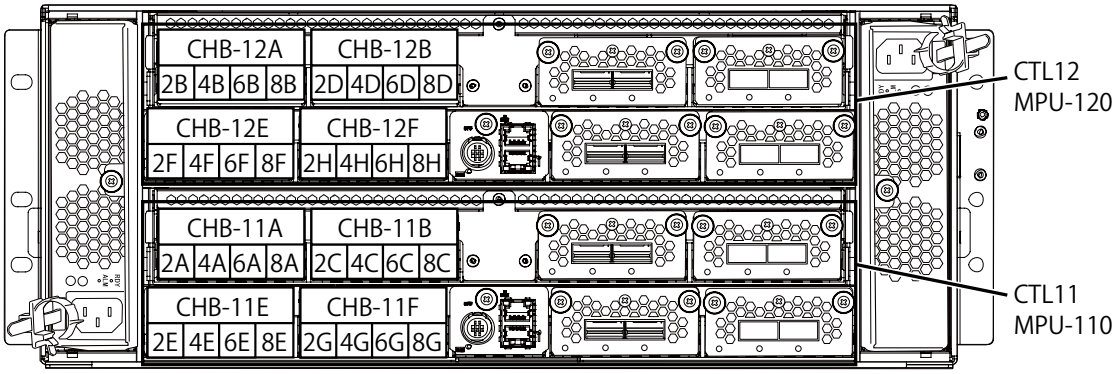

Rear view of DKC-1

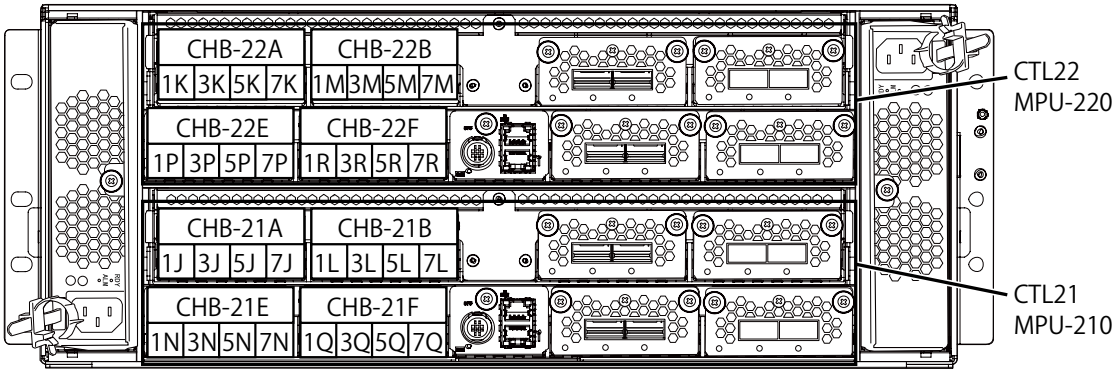

Rear view of DKC-2

Figure 4-2 Port Numbers on Channel Boards (16 Gbps (4 Port) FICON/16, 32 Gbps (4 Port) FC) and MPU Locations (2/2)

CHB Port Number

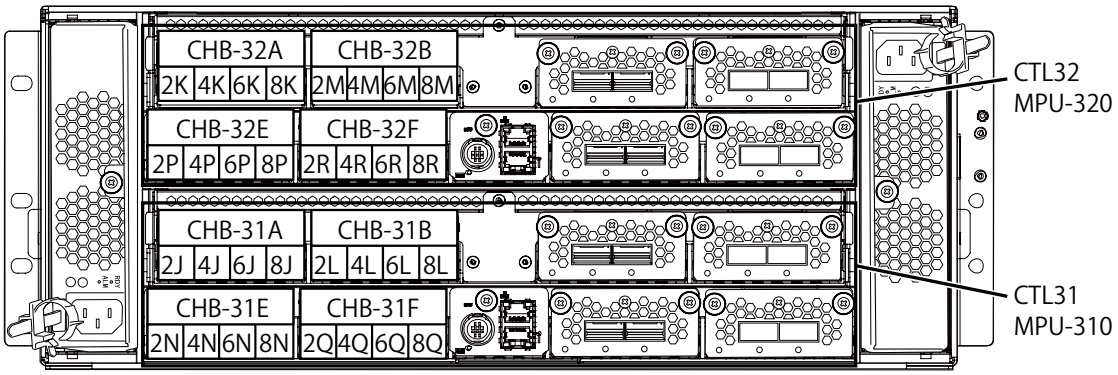

Rear view of DKC-3

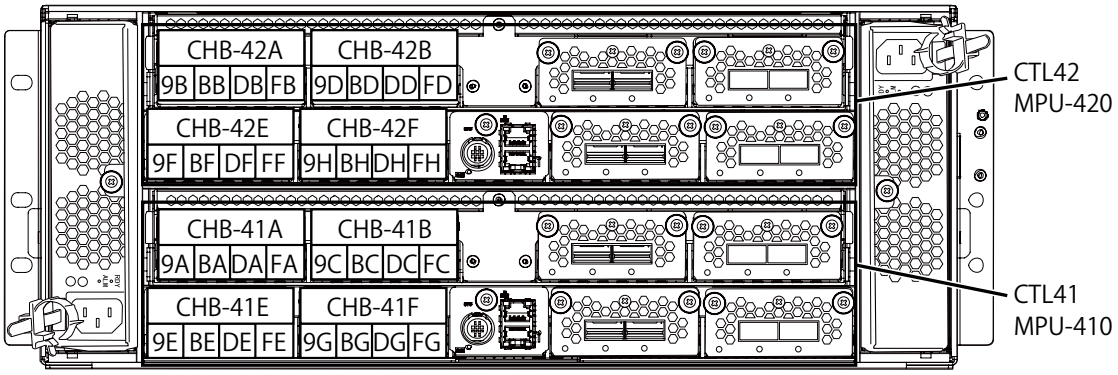

Rear view of DKC-4

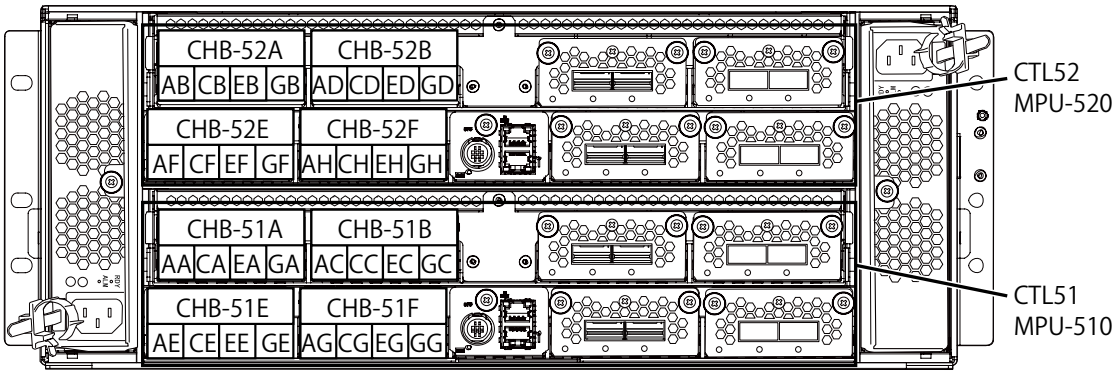

Rear view of DKC-5

Figure 4-3 Port Numbers on Channel Boards (10 Gbps (2 Port) iSCSI) and MPU Locations (1/2)

CHB Port Number

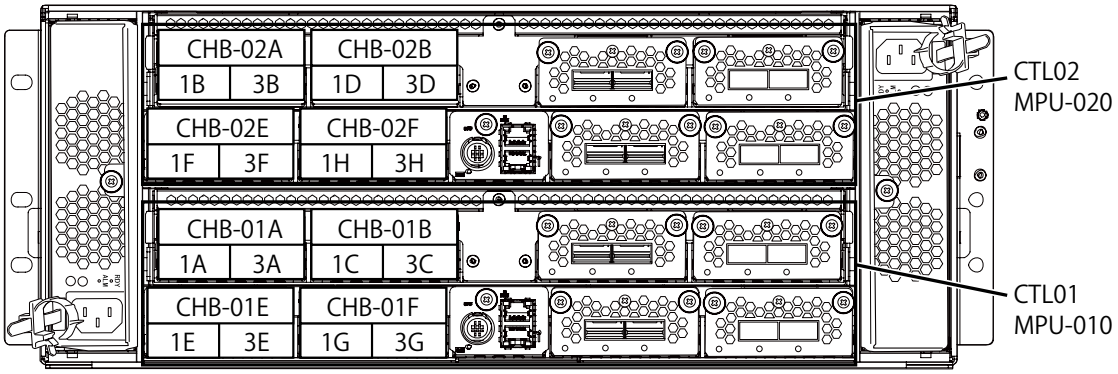

Rear view of DKC-0

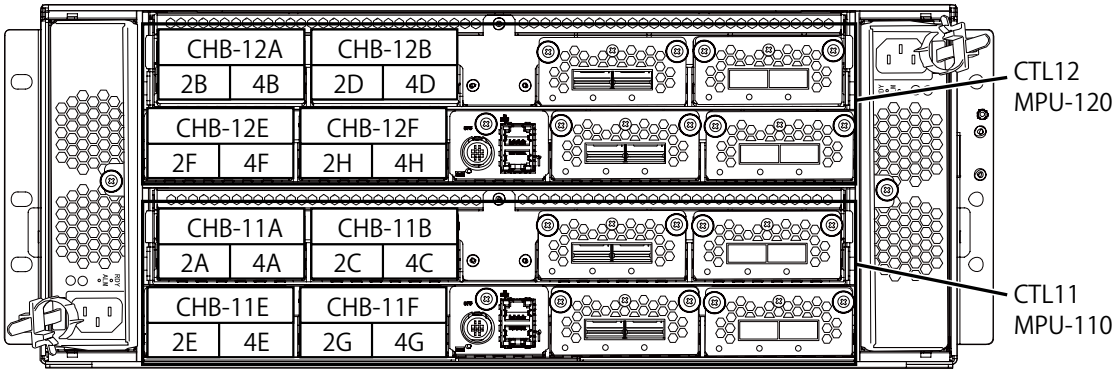

Rear view of DKC-1

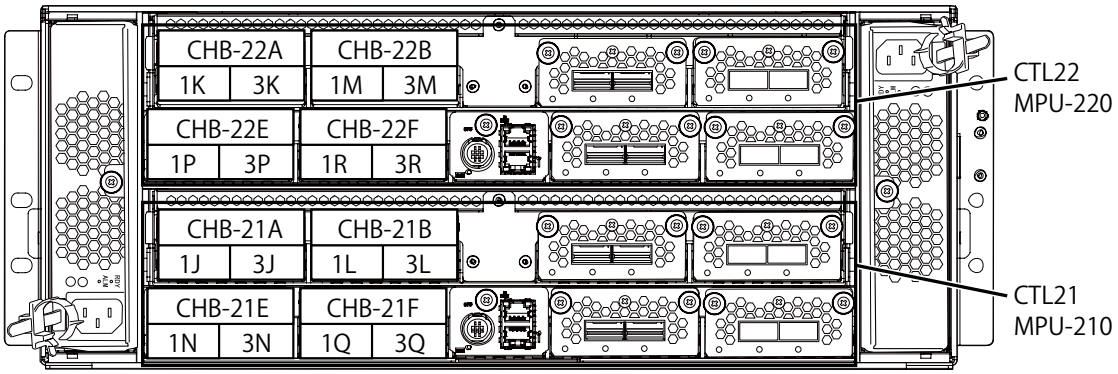

Rear view of DKC-2

Figure 4-4 Port Numbers on Channel Boards (10 Gbps (2 Port) iSCSI) and MPU Locations (2/2)

CHB Port Number

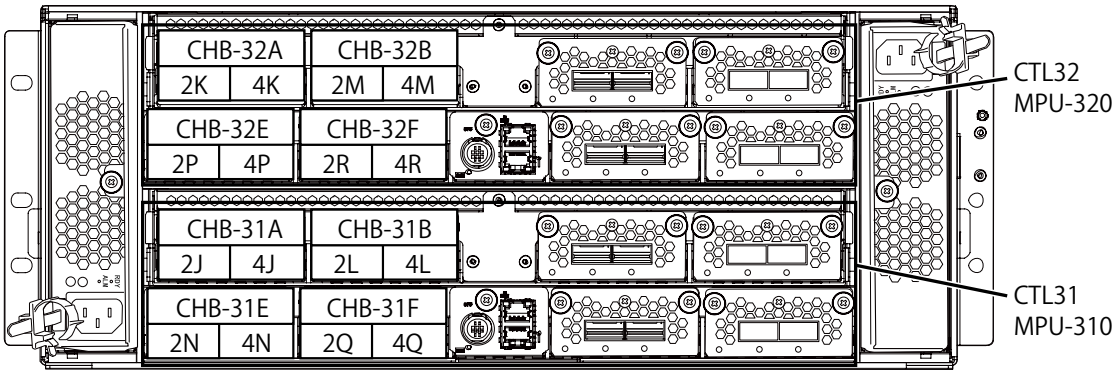

Rear view of DKC-3

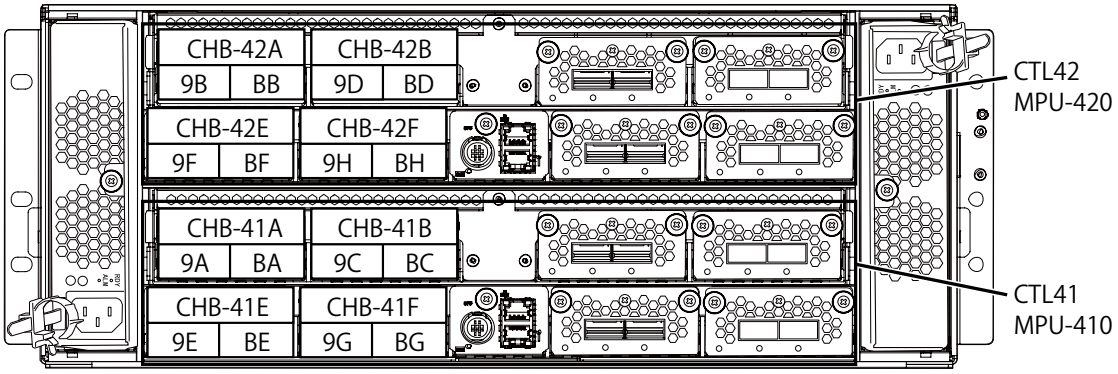

Rear view of DKC-4

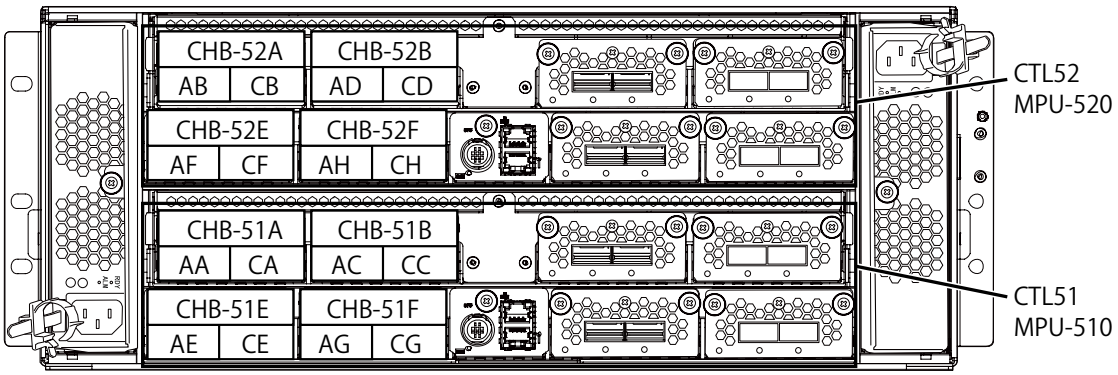

Rear view of DKC-5

4.2 SVP Interface

Figure 4-5 SVP Interface

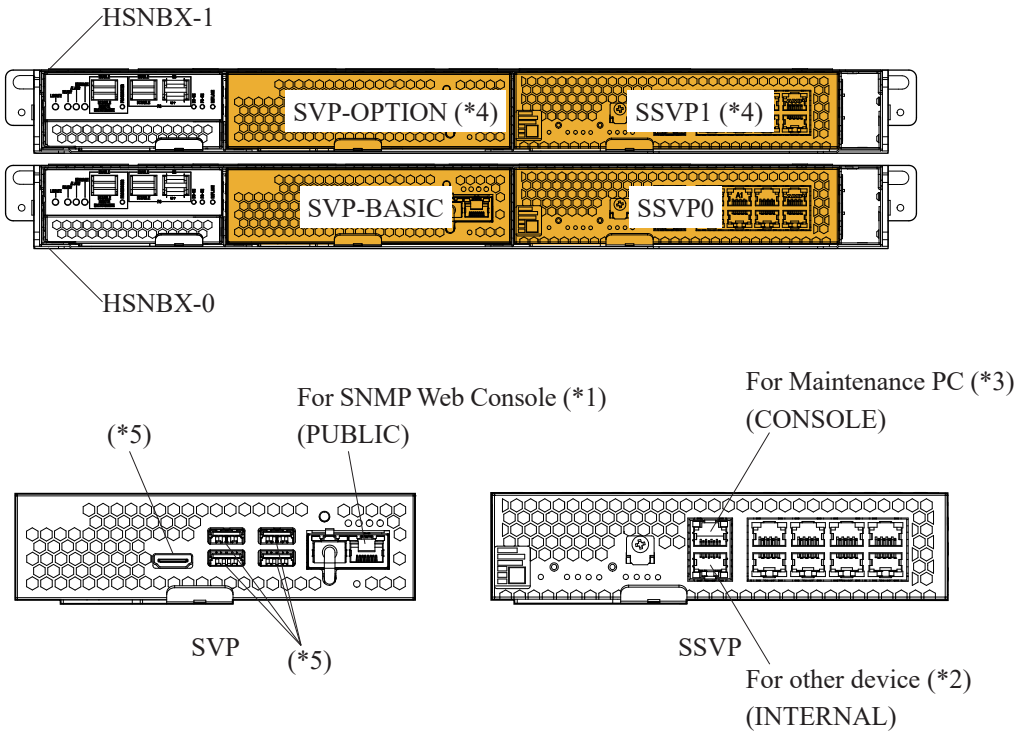

*1: Connect the cable to both the SVP-BASIC and the SVP-OPTION.

*2: Connect the other device cable only to SSVP0 (SVP-BASIC side). You need not connect it to SSVP1 (SVP-OPTION side).

*3: Connect the Maintenance PC only to SSVP0 (SVP-BASIC side). When you cannot use SSVP0 due to a failure, connect the Maintenance PC to SSVP1 (SVP-OPTION side).

*4: Only when the SVP High Reliability Kit is installed, SSVP is installed in SSVP1 and SVP is installed in SVP-OPTION.
When the SVP High Reliability Kit is not installed, a dummy is installed in each of SSVP1 and SVP-OPTION.

*5: Not allowed to be used. Do not connect devices.

4.3 Network Cable Connection Diagram

See “Connecting Cables” (INST(IN)09-01-10) for the network cable connection diagram.

5. Storage System Cable Diagram

5.1 SAS Cable/NVMe Cable Diagram

SAS Cable connections between DKC and DKU, and between DKUs are shown in Figure 5-1 through Figure 5-6. NVMe Cable connections between DKC and NBX are shown in Figure 5-7 and Figure 5-8.
See the following figures according to the chassis to be connected with SAS cables.

- Connection between two DKCs (OUT) and SBX/FBX (IN) for VSP 5100 and 5100H: Figure 5-1, and Figure 5-3
- Connection between two DKCs (OUT) and SBX/FBX (IN) for VSP 5500 and 5500H: Figure 5-2, and Figure 5-3
- Connection between SBX/FBX (OUT) and SBX/FBX (IN): Figure 5-3, and Figure 5-4
- Connection between UBX (OUT) and UBX (IN): Figure 5-5, and Figure 5-6
- Connection between SBX/FBX (OUT) and UBX (IN): Figure 5-4, and Figure 5-5
- Connection between UBX (OUT) and SBX/FBX (IN): Figure 5-3, and Figure 5-6

Color codes with the same color are attached to the SAS cable and the PCB to be connected. Connect the SAS cable to the PCB according to the color code. For colors of the color codes, see Table 5-1.

Figure 5-1 SAS Cable Diagram (OUT Side of DKC × 2) (For VSP 5100 and VSP 5100H)

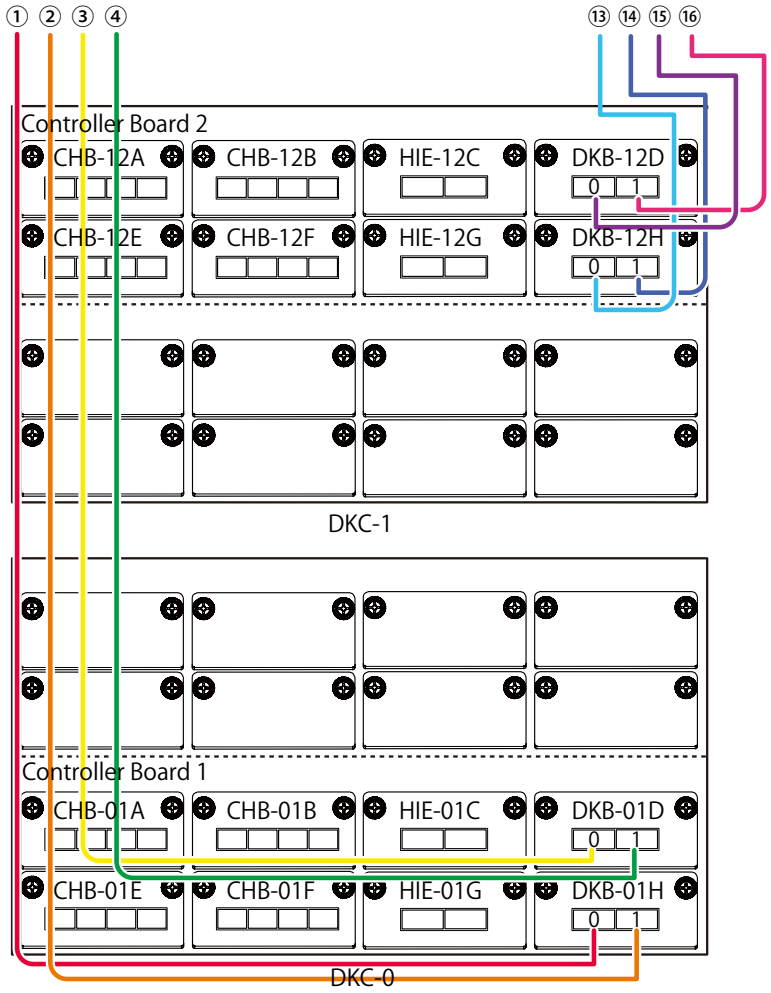

NOTE: The DKU (DKU-x0) that can be connected to the DKCs are SBX and FBX

Figure 5-2 SAS Cable Diagram (OUT Side of DKC × 2) (For VSP 5500 and VSP 5500H)

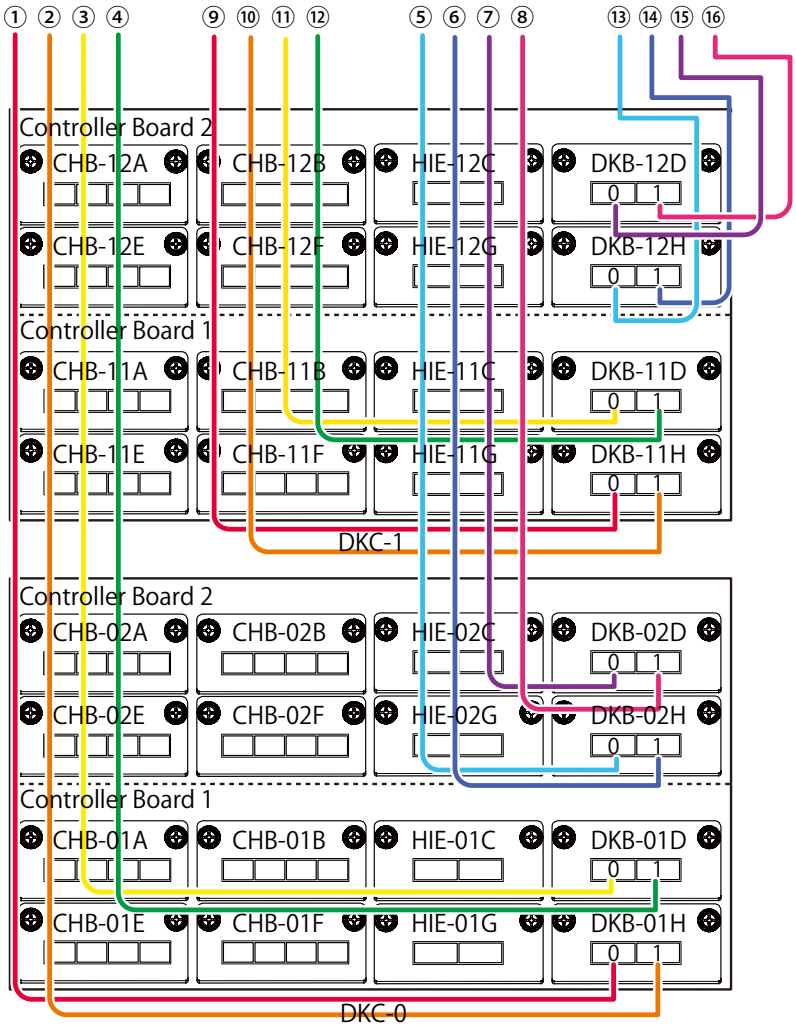

NOTE:
- For DKCs other than DKC-0 or DKC-1, replace the DKC No.
  Replace the location name “x” in “DKB-x1H” and the like according to the DKC No.
- The DKU (DKU-x0) that can be connected to the DKCs are SBX and FBX.

Figure 5-3 SAS Cable Diagram (IN Side of SBX/FBX)

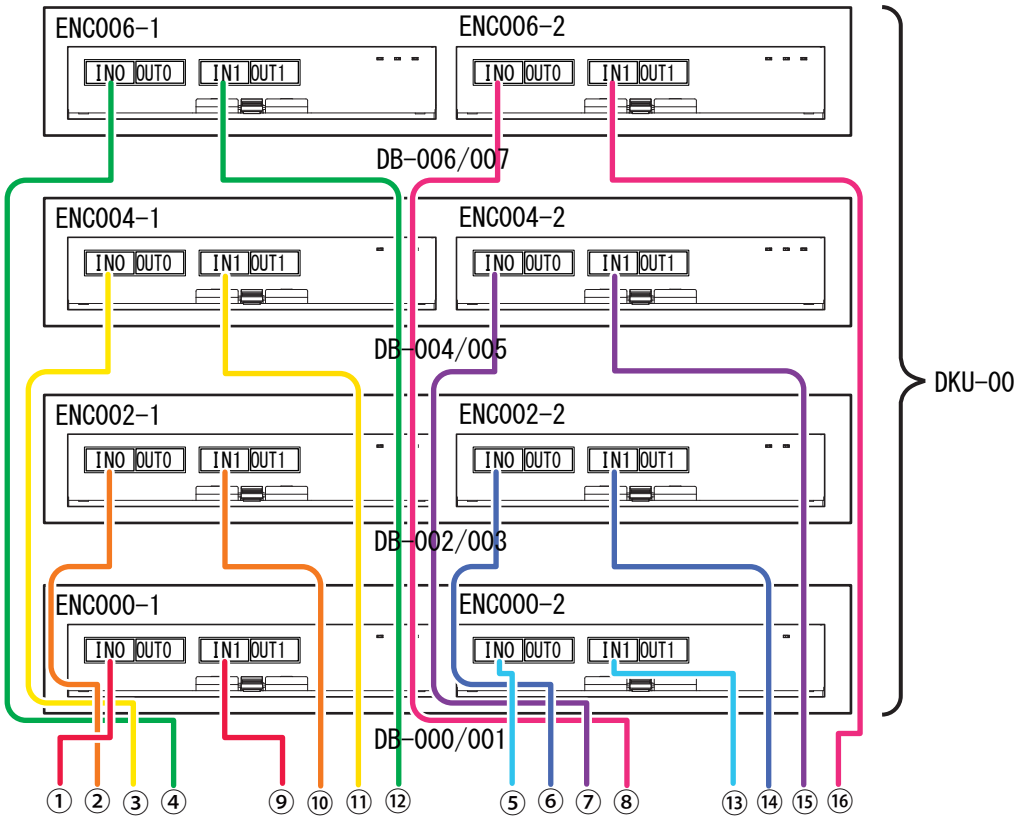

NOTE:
- For DKUs other than DKU-00, replace the DKU No., DB No., and ENC No.
  The DKU No. (SBX/FBX) is assigned by the CBX Pair No.
  DKUs connected to CBX Pair 0: DKU No. 00 to 07
  DKUs connected to CBX Pair 1: DKU No. 10 to 17
  DKUs connected to CBX Pair 2: DKU No. 20 to 27
  The DB No. is assigned sequentially regardless of the DKU No.
  DBs connected to CBX Pair 0: DB No. 000 to 063
  DBs connected to CBX Pair 1: DB No. 064 to 127
  DBs connected to CBX Pair 2: DB No. 128 to 191
- For VSP 5500 and 5500H, connect 16 SAS cables (① through ⑯).
  For VSP 5100 and 5100H, connect eight SAS cables (① through ④ , and ⑬ through ⑯). The other eight cable connections (⑤ through ⑫) are not required.
  For VSP 5100 and 5100H, use 8 SAS cables (① through ④ , and ⑬ through ⑯) when connecting DKC and DKU, and 16 SAS cables (① through ⑯) when connecting DKU and DKU.

Figure 5-4 SAS Cable Diagram (OUT Side of SBX/FBX)

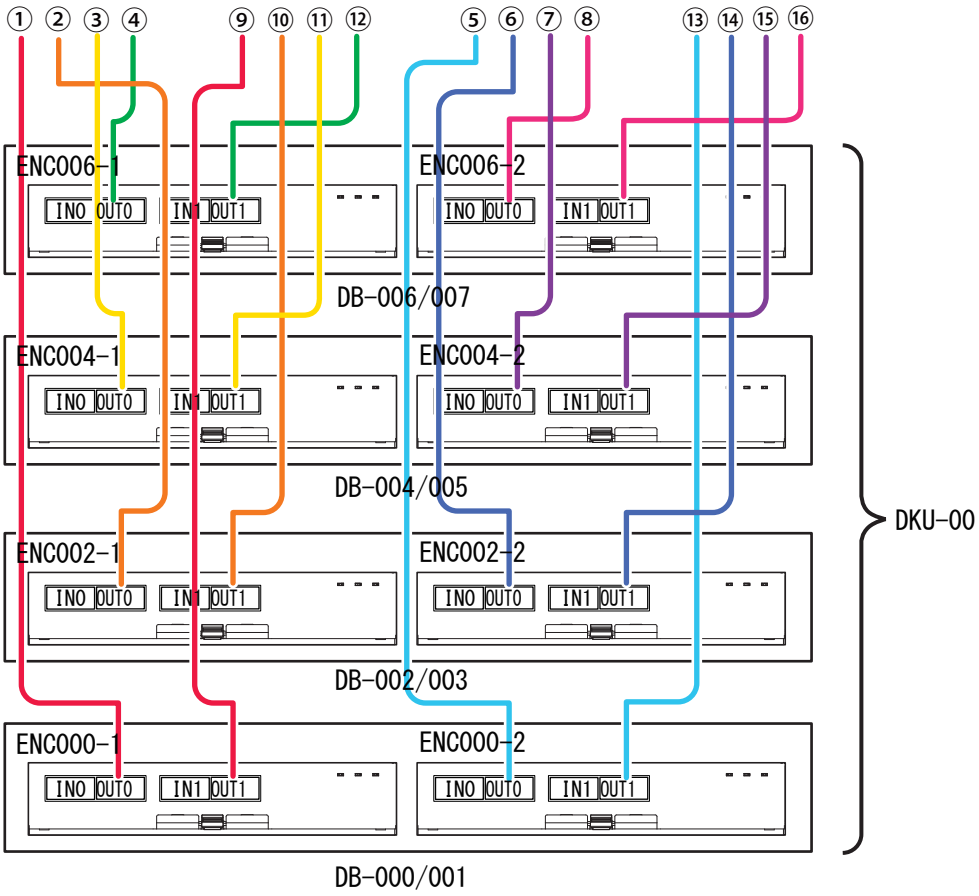

NOTE: • For DKUs other than DKU-00, replace the DKU No., DB No., and ENC No.
The DKU No. (SBX/FBX) is assigned by the CBX Pair No.
DKUs connected to CBX Pair 0: DKU No. 00 to 07
DKUs connected to CBX Pair 1: DKU No. 10 to 17
DKUs connected to CBX Pair 2: DKU No. 20 to 27
The DB No. is assigned sequentially regardless of the DKU No.
DBs connected to CBX Pair 0: DB No. 000 to 063
DBs connected to CBX Pair 1: DB No. 064 to 127
DBs connected to CBX Pair 2: DB No. 128 to 191

Figure 5-5 SAS Cable Diagram (IN Side of UBX)

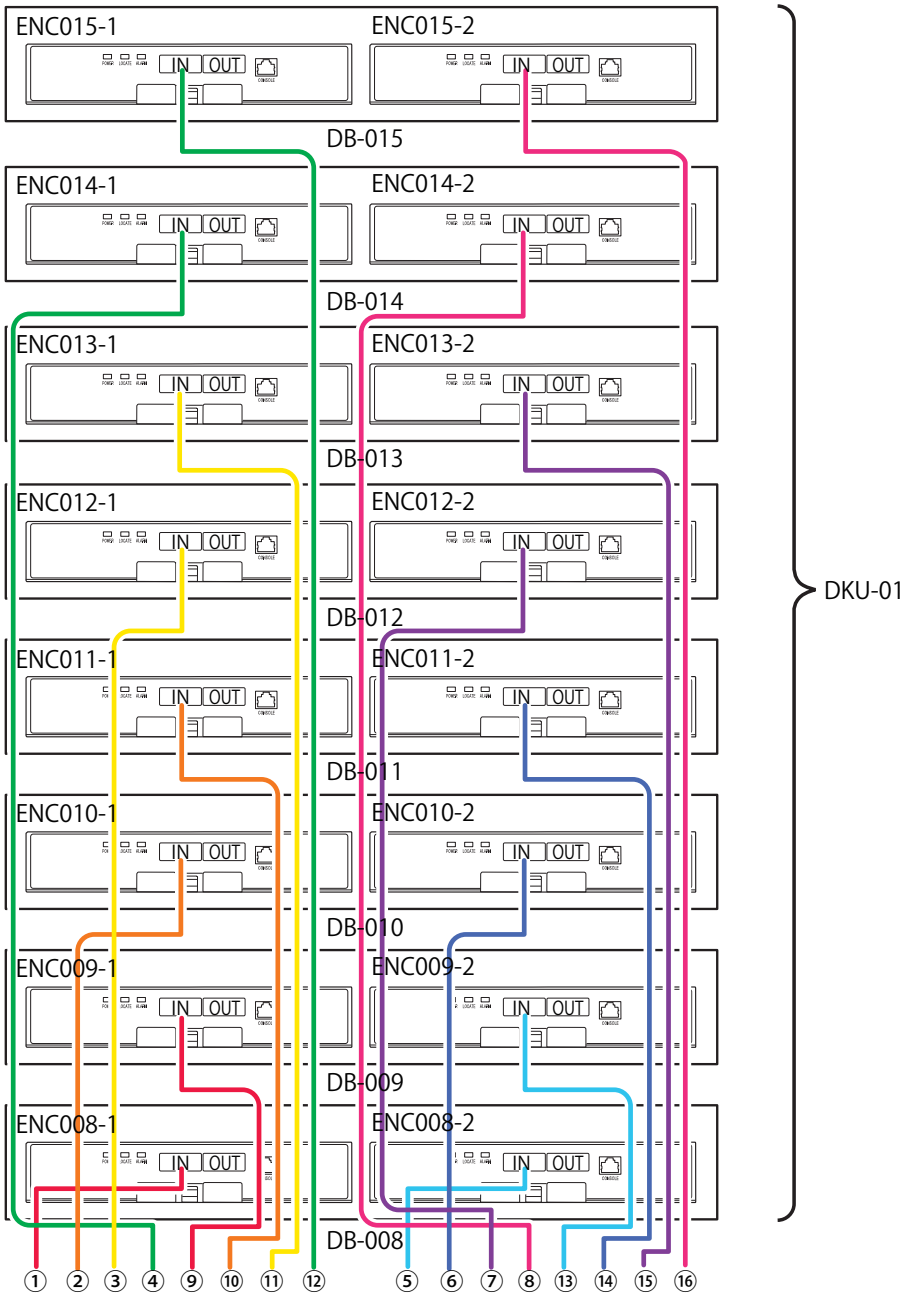

NOTE: • For DKUs other than DKU-00, replace the DKU No., DB No., and ENC No.
The DKU No. (UBX) is assigned by the CBX Pair No.
DKUs connected to CBX Pair 0: DKU No. 01 to 07
DKUs connected to CBX Pair 1: DKU No. 11 to 17
DKUs connected to CBX Pair 2: DKU No. 21 to 27
The DB No. and ENC No. are assigned sequentially regardless of the DKU No.
DBs connected to CBX Pair 0: DB No. 008 to 063
DBs connected to CBX Pair 1: DB No. 072 to 127
DBs connected to CBX Pair 2: DB No. 136 to 191
• Up to four UBX can be installed per CBX Pair.

Figure 5-6 SAS Cable Diagram (OUT Side of UBX)

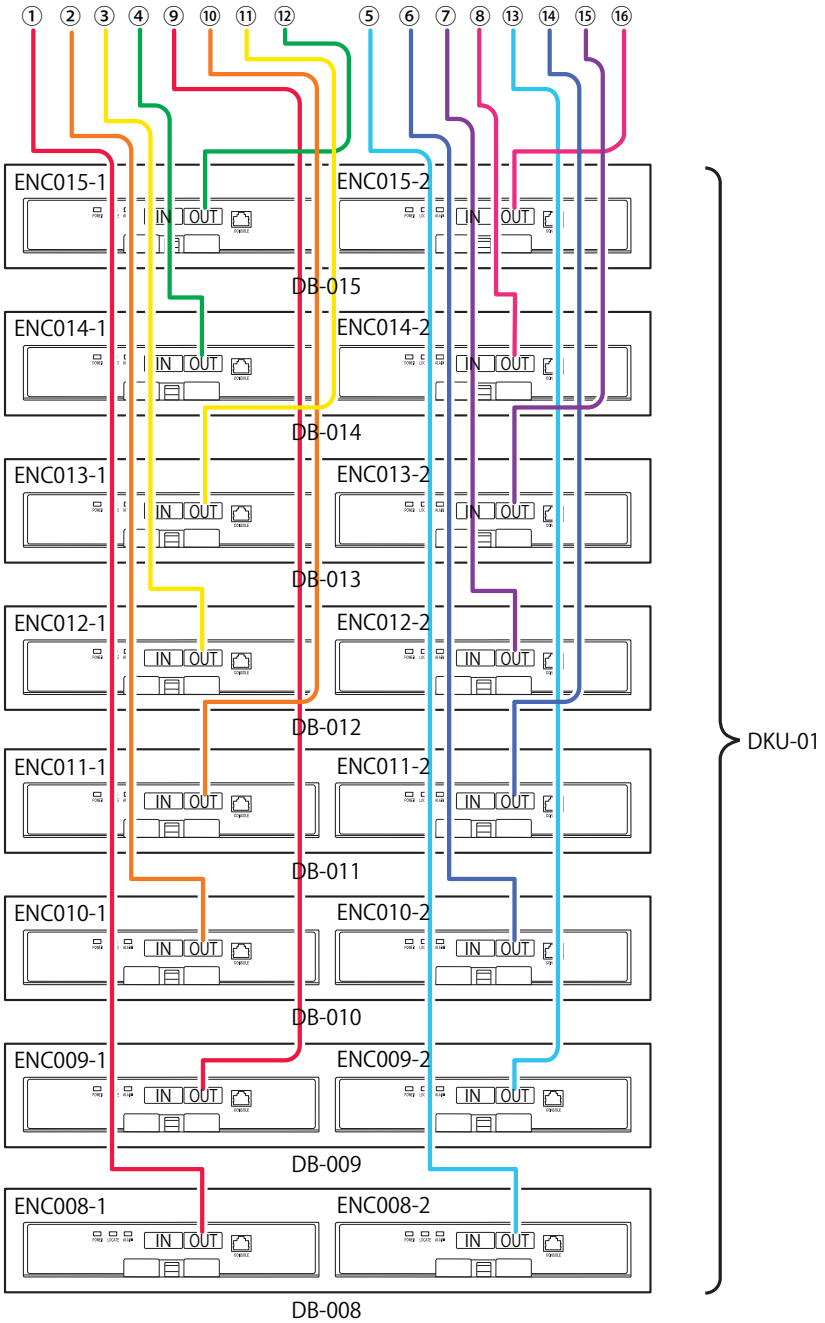

NOTE: • For DKUs other than DKU-00, replace the DKU No., DB No., and ENC No.
The DKU No. (UBX) is assigned by the CBX Pair No.
DKUs connected to CBX Pair 0: DKU No. 01 to 07
DKUs connected to CBX Pair 1: DKU No. 11 to 17
DKUs connected to CBX Pair 2: DKU No. 21 to 27
The DB No. and ENC No. are assigned sequentially regardless of the DKU No.
DBs connected to CBX Pair 0: DB No. 008 to 063
DBs connected to CBX Pair 1: DB No. 072 to 127
DBs connected to CBX Pair 2: DB No. 136 to 191
• Up to four UBX can be installed per CBX Pair.

Figure 5-7 NVMe Cable Diagram (DKC × 2, NBX) (For VSP 5100 and VSP 5100H)

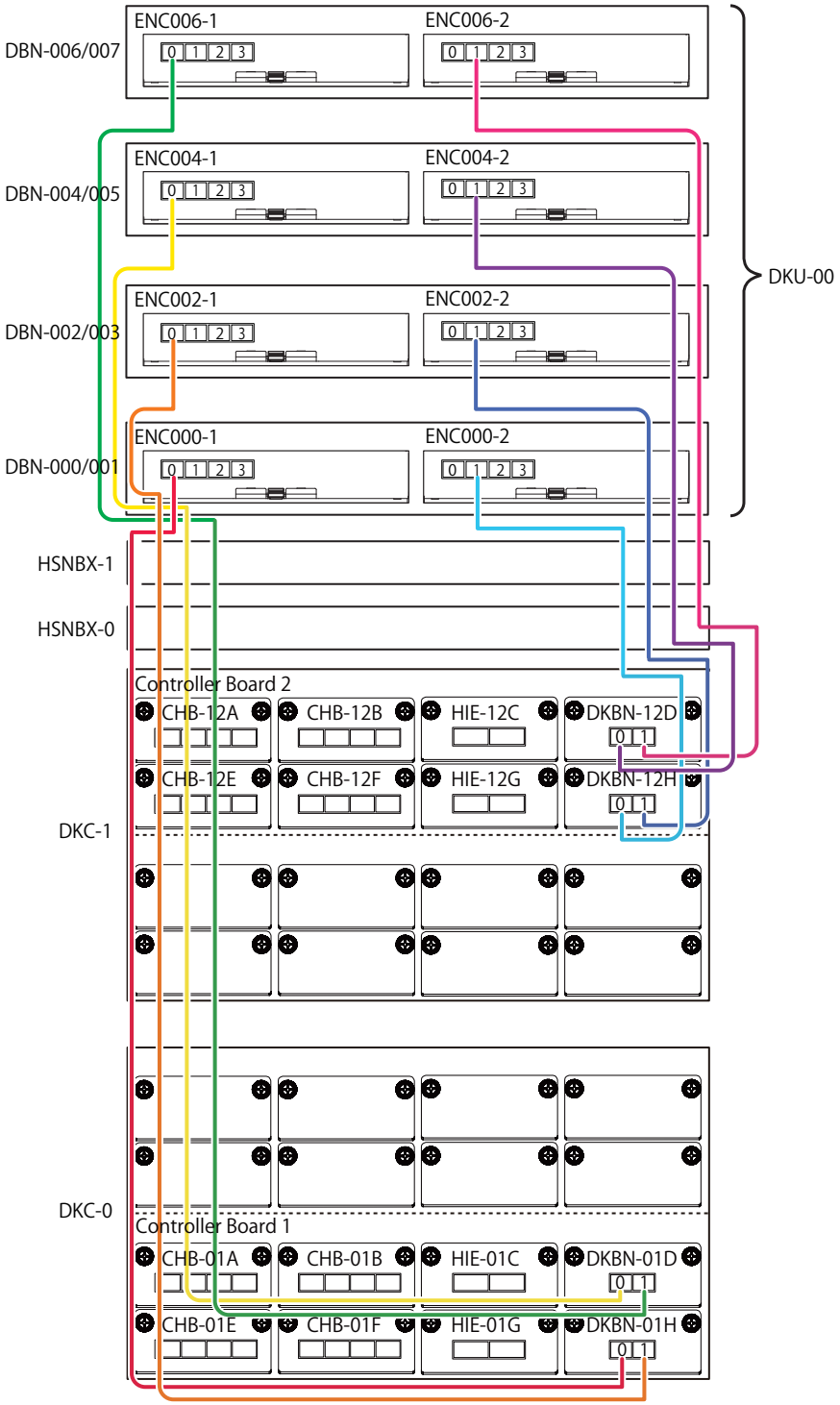

NOTE: DKU to which NVMe cables can be connected is only NBX.

Figure 5-8 NVMe Cable Diagram (DKC × 2, NBX) (For VSP 5500 and VSP 5500H)

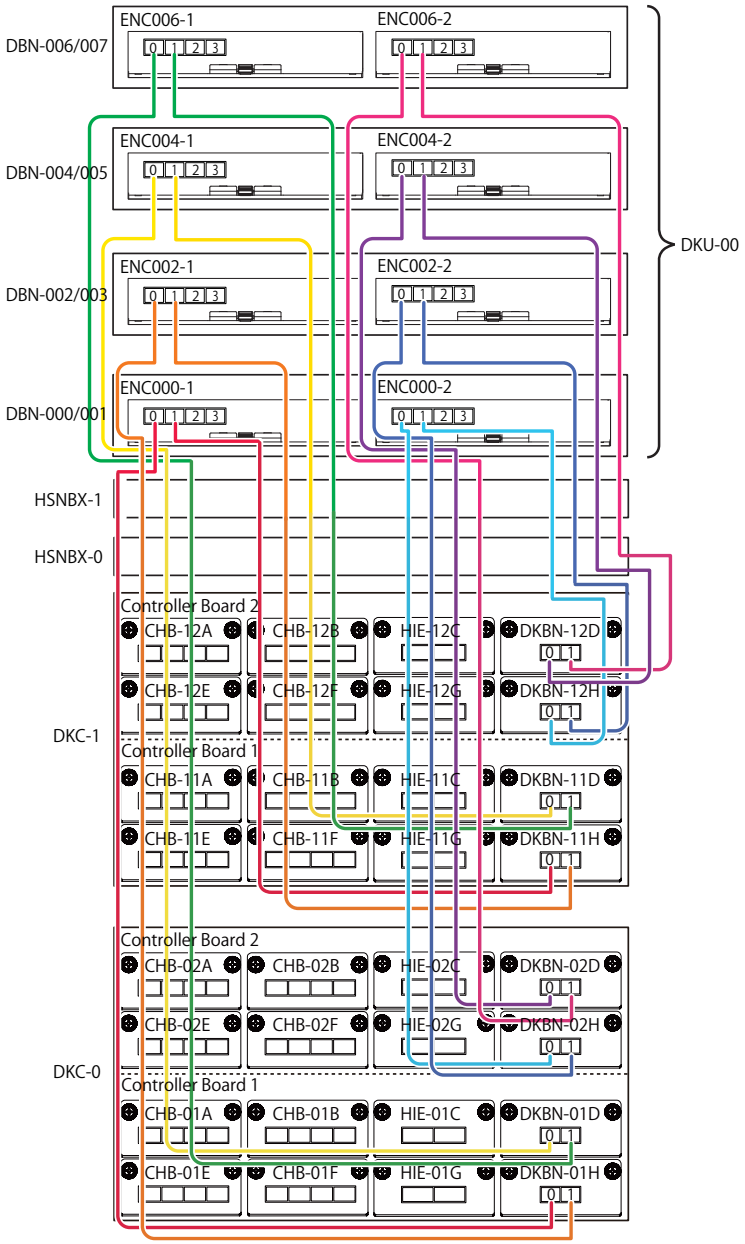

NOTE:
- DKU to which NVMe cables can be connected is only NBX.
- For DKCs other than DKC-0 or DKC-1, replace the DKC No. Replace the location name "x" in "DKB-x1H" and the like according to the DKC No.
- For DKUs other than DKU-00, replace the DKU No., DB No., and ENC No.
  The DKU No. (NBX) is assigned by the CBX Pair No.
  DKU connected to CBX Pair 0: DKU No. 00
  DKU connected to CBX Pair 1: DKU No. 10
  DKU connected to CBX Pair 2: DKU No. 20
  The DB No. is assigned sequentially regardless of the DKU No.
  DBs connected to CBX Pair 0: DB No. 000 to 007
  DBs connected to CBX Pair 1: DB No. 064 to 071
  DBs connected to CBX Pair 2: DB No. 128 to 135

Table 5-1 Color List of Cable Color Codes

Cable No. in Figure 5-1 through Figure 5-5	Content	Label Color	Color Name	Remarks
①	PATH No. (DKC-0/2/4)		Red	
②			Orange	
③			Yellow	
④			Green	
⑤			Light blue	
⑥			Blue	
⑦			Purple	
⑧			Pink	
⑨	PATH No. (DKC-1/3/5)		Red	With oblique lines.
⑩			Orange	With oblique lines.
⑪			Yellow	With oblique lines.
⑫			Green	With oblique lines.
⑬			Light blue	With oblique lines.
⑭			Blue	With oblique lines.
⑮			Purple	With oblique lines.
⑯			Pink	With oblique lines.
—	IN		White	No color for OUT.

5.2 X-path Cable Diagram

Figure 5-9 to Figure 5-12 show the X-path cable diagrams.

Figure 5-9 X-path Cable Diagram (CBX Pair 0, HSNBX-0/1+DKC-0/1)
(For VSP 5100 and VSP 5100H)

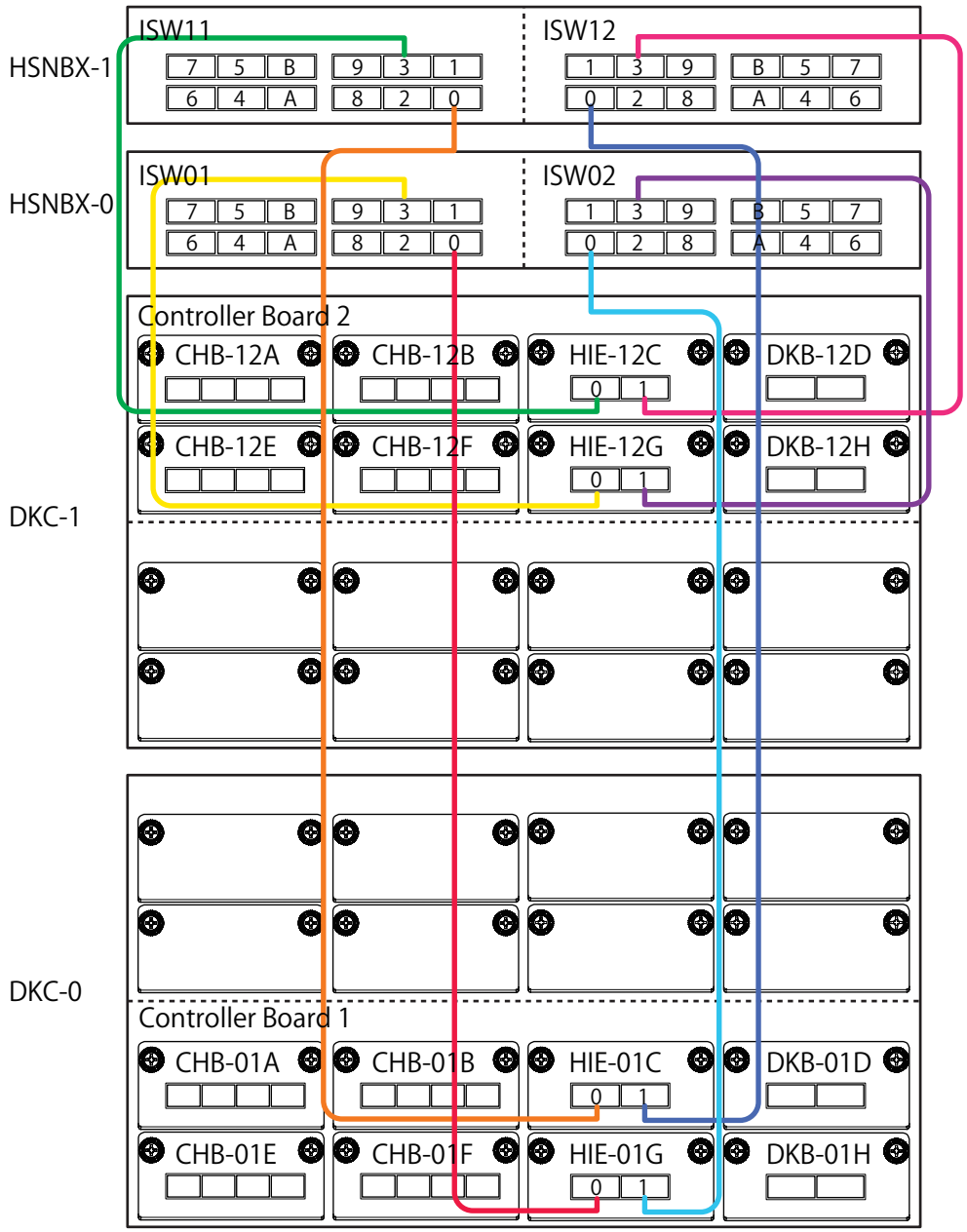

Figure 5-10 X-path Cable Diagram (CBX Pair 0, HSNBX-0/1+DKC-0/1)
(For VSP 5500 and VSP 5500H)

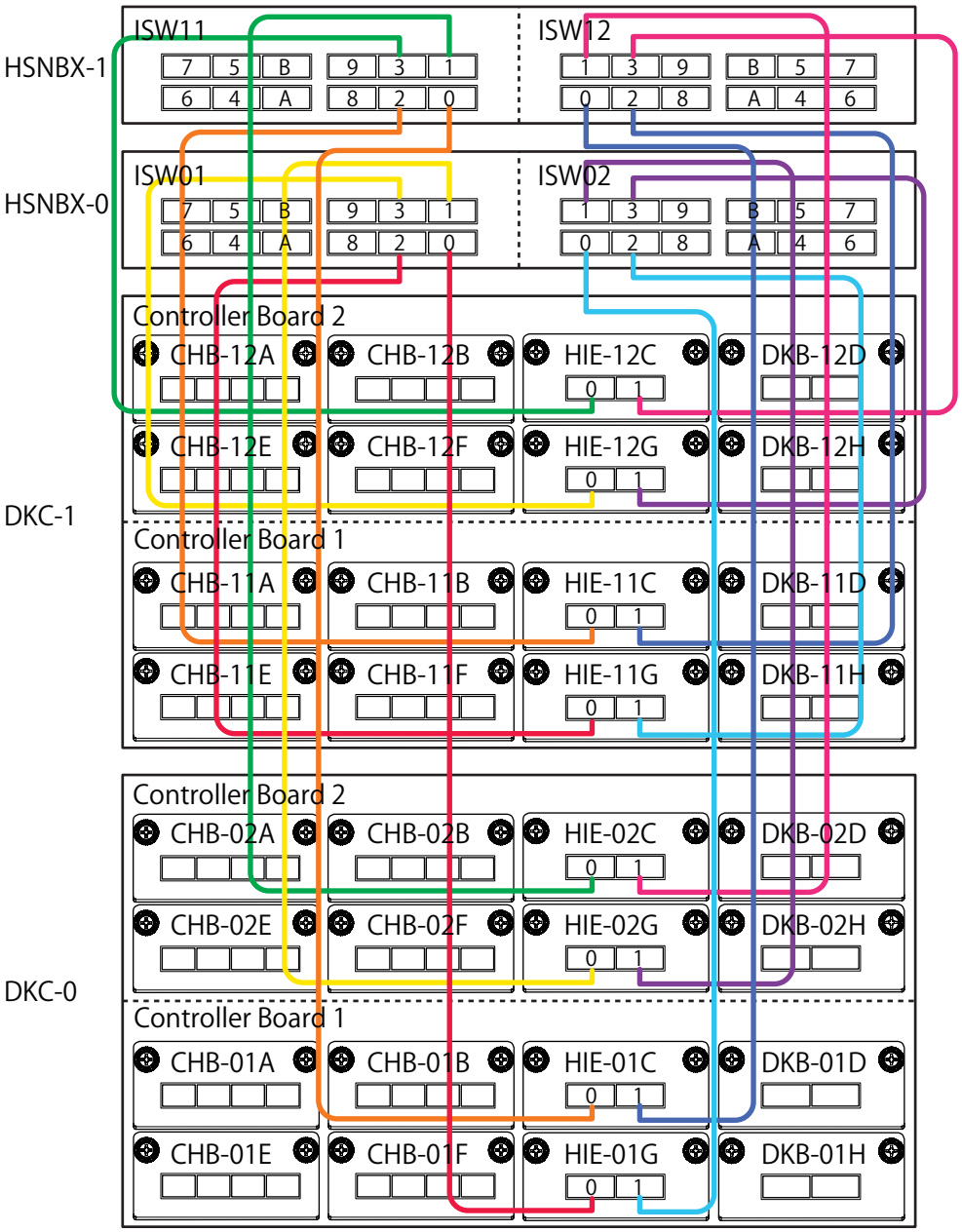

Figure 5-11 X-path Cable Diagram (CBX Pair 1, HSNBX-0/1+DKC-2/3)

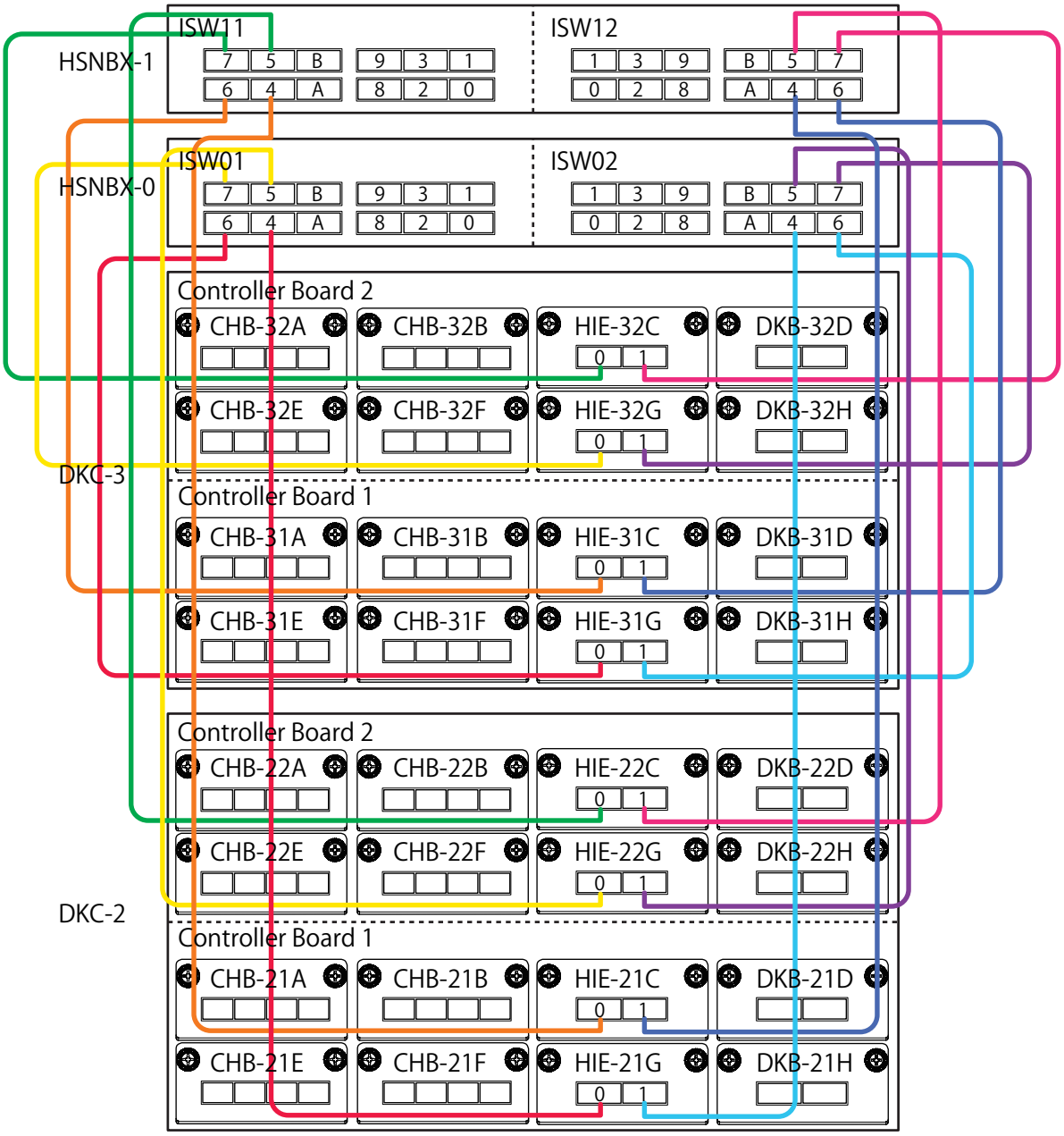

Figure 5-12 X-path Cable Diagram (CBX Pair 2, HSNBX-0/1+DKC-4/5)

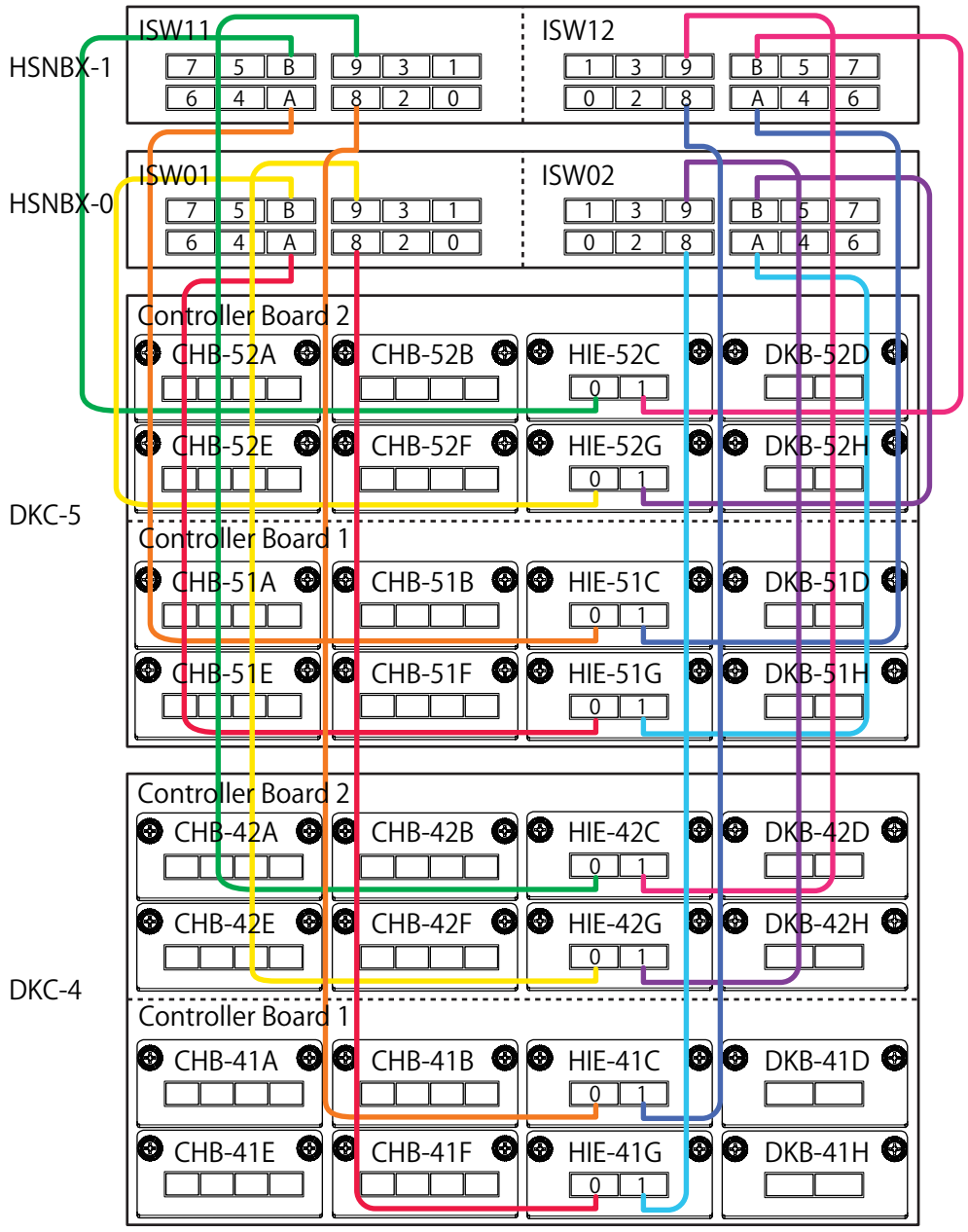

6. Jumper Setting

6.1 Jumper setting of each parts

The table below shows the jumper setting.

Table 6-1 Jumper setting of each parts

No.	Function Name	Jumper No.	Settings
1	HSNPANEL	JP1	Reserved
		JP2	Reserved
		JP3	Reserved
		JP4	Reserved
		JP5	Reserved
		JP6	SYSFORCEOFF MODE
		JP7	Reserved
		JP8	Reserved
		JP9	Reserved
		JP10	AUTOPSON DISABLE
		JP11	AUTOPSON ENABLE
		JP12	HSNBX-0
		JP13	HSNBX-1

1. Jumper setting for HSNPANEL

Table 6-2 Jumper setting for HSNPANEL

Function Name	Jumper No.	Settings	Jumper Settng
HSNPANEL	JP1	Reserved (default)	
	JP2	Reserved	
	JP3	Reserved (default)	
	JP4	Reserved	
	JP5 (VOJP1)	Reserved (Not used)	
	JP6	Reserved	
	JP7 (VOJP2)	Reserved (Not used)	
	JP8 (CEMD)	Reserved (Not used)	
	JP9 (CEDT)	Reserved (Not used)	
	JP10 (AUTOPSON DISABLE)	Power on the storage system by switching PS ON/PS OFF after turn on the AC power. (default).	JP10  Green jumper Operable only on HSNPANEL0
	JP11 (AUTOPSON ENABLE)	The storage system is powered on automatically after turn on the AC power.	JP11  Green jumper Operable only on HSNPANEL0
	JP12 (HSNBX-0)	HSNBX chassis number “0” is set (default).	JP12  Green jumper
	JP13 (HSNBX-1)	HSNBX chassis number “1” is set.	JP13  Green jumper

Figure 6-1 Jumper setting on HSNPANEL