Copyright COMPAREX Informationssysteme GmbH 1999

All rights reserved.

No part of this publication may be reproduced,
stored in a retrieval system, or transmitted in
any form or by any means, electronic, mechanical,
photocopying, recording, or otherwise, without
the prior written permission of
COMPAREX Informationssysteme GmbH.

COMPAREX
Informationssysteme GmbH
Gottlieb-Daimler-Straße 10
D-68165 Mannheim

Internet: http://www.comparex.de
Tel.: 0 18 05 42 02
Fax.: 0 18 05 42 03

Customer from other countries are kindly requested
to contact directly their local COMPAREX office:

CXAF 8212/05/99

© COMPAREX Informationssysteme GmbH

MLPF 3.5.1 Original Edition (April 1999)

Information contained in this manual is subject to change without prior notice. The reader is responsible for maintaining up-to-date editions.

Trademarks

Enterprise Systems Architecture/390, ESCON, ES/9000, IBM, OS/390, and VM/ESA are registered trademarks of International Business Machines Corporation. ESA/390, ES/3090, MVS/ESA, MVS/SP, MVS/XA, and RMF are trademarks of International Business Machines Corporation.

© 1997 Hitachi, Ltd., All Rights Reserved
© 1997 COMPAREX Informationssysteme GmbH, All Rights

Change Record

Revision No.	Date	Description	Affected Pages
0	April 1999	Original edition.	—

© COMPAREX Informationssysteme GmbH

PREFACE

This document serves as a user manual relating to Multiple Logical Processor Feature (MLPF) release 3.5.1.

Please note that this document provides information relating to daily operations, covering those unique to LPAR (logically-partitioned) mode. For operations common between Basic mode (not logically-partitioned mode) and LPAR mode, and those unique to Basic mode, see separate operation manuals for applicable Processor Groups.

Information contained in this document is subject to change without notice.

Important Note: *Following information is valid throughout the complete manual:*

- *C2000-xxA represents the processor models C2000-xx7, C2000-xx8, C2000-xxA, and C2000-xxB*
- *C2000-xxC represents the processor models C2000-xxC and C2000-xx*D

If necessary, detailed models types are listed.

Reference manuals

- C2000-xxA/xxB and C2000-xxC/xxD Series Operating Manual
- COMPAREX MLPF 3.5.0 User Manual
- COMPAREX HCCFA 4.0 User Manual
- Time Machine Utility Manual
- IBM ES/9000 ES/3090 Integrated Cryptographic Feature User's Guide (GA22-7142)
- IBM ES/9000 ES/3090 Input/Output Configuration Program User Guide (GC38-0097)
  IBM ES/9000 Input/Output Configuration Program User's Guide and ESCON Channel-to-Channel Reference (GC38-0401)
- IBM System/370 Principles of Operation (GA22-7000)
- IBM Enterprise Systems Architecture/390 Principles of Operation (SA22-7201)

© COMPAREX Informationssysteme GmbH

Table of Contents

PREFACE III

LIST OF ABBREVIATIONS VIII

SAFETY SUMMARY 11

1 GENERAL INFORMATION 1-1

1.1 ABOUT THIS DOCUMENT 1-1
1.2 APPLICABLE PROCESSOR MODELS 1-1
1.3 OVERVIEW OF NEW FEATURES INTRODUCED WITH MLPF 3.5.1 1-2
1.3.1 SUPPORT OF C2000-XXC AND DISCONTINUED SUPPORT OF M2000 1-2
1.3.2 VIRTUAL SERVER FACILITY PHASE-1 1-2
1.3.3 ADDITION TO MLPF POLICY 1-2
1.3.4 MODIFICATION TO INTCF IP SCHEDULING METHOD 1-2
1.3.5 ICF PARTITION DISPATCHING 1-2
1.3.6 ADDITION TO LPAR RESOURCE DEFINITION FRAME 1-2
1.3.7 CHANGES AND IMPROVEMENTS IN MLPF MESSAGES 1-2
1.4 SUMMARY OF DEVIATIONS BY PROCESSOR MODELS 1-3
1.4.1 DEVIATIONS IN MLPF USER'S GUIDE 1-4
1.4.2 DEVIATIONS IN MLPF OPERATING PROCEDURES 1-7
1.4.3 DEVIATIONS IN MLPF MESSAGES 1-10
1.4.4 (INTENTIONALLY LEFT BLANK) 1-10

2 INTRODUCTION TO MLPF USER'S GUIDE 2-1

2.1 WHAT IS MLPF? 2-1
2.2 LOGICAL PARTITIONING 2-2
2.3 FEATURES OF LPAR MODE 2-4
2.3.1 PREREQUISITE 2-4
2.3.2 SUPPORTED OPERATING SYSTEMS 2-4
2.3.3 FUNCTIONAL DEVIATIONS FROM BASIC MODE 2-4
2.3.4 LPAR CONFIGURATION 2-4
2.3.5 CPU ID 2-5
2.3.6 TOD 2-5
2.3.7 DISPLAY OF PSW 2-5
2.3.8 DISPLAY OF SYSTEM ACTIVITIES 2-5
2.3.9 CONSOLE INTEGRATION 2-6
2.3.10 INTER-SYSTEM COUPLING CHANNEL 2-6
2.3.11 HIGHSPEED COUPLING CONTROL FEATURE 2-6
2.3.12 REAL MS CAPACITY EXPANSION 2-6
2.3.13 2-IOCDS MODE (LPAR/EX MODE) 2-7
2.3.14 TIME MACHINE 2-7
2.3.15 TIME ACCELERATOR 2-7
2.3.16 DYNAMIC CF DISPATCHING 2-8
2.3.17 INTEGRATED COUPLING FACILITY 2-8
2.3.18 MLPF POLICY 2-8
2.3.19 DUMMY MODE 2-8
2.3.20 PHYSICAL IP GROUP SCHEDULING FACILITY 2-8
2.3.21 VIRTUAL SERVER FACILITY PHASE-1 2-9
2.3.22 AVAILABILITY IMPROVEMENT WITH SUPPORT OF PROCESS SUCCESSION 2-9
2.3.23 ARCHITECTURAL DEVIATIONS IN LPAR MODE 2-9

3 MLPF POLICY DETAILS 3-1

3.1 MLPF POLICY OVERVIEW 3-1
3.2 POLICY DIAGNOSE INSTRUCTION 3-2
3.2.1 APPLICATION AND INSTRUCTION FORMAT 3-2
3.2.2 CONDITION CODES FOR POLICY DIAGNOSE INSTRUCTION 3-3
3.2.3 COMPLETION CODES FOR POLICY DIAGNOSE INSTRUCTION 3-3
3.2.4 PROGRAM EXCEPTIONS 3-4

© COMPAREX Informationssysteme GmbH

3.2.5 Programming Notes 3-4
3.2.6 Policy Control Block (PCB) 3-4
3.3 PMC Command 3-8
3.3.1 ACT Command 3-8
3.3.2 ACTDEF Command 3-8
3.3.3 DEACT Command 3-9
3.3.4 DEFINE Command 3-9
3.3.5 IPL Command 3-12
3.3.6 LCTOFFST Command 3-12
3.3.7 MODIFY2 Command 3-12
3.3.8 OPRCH Command 3-12
3.3.9 SAVE Command 3-13
3.3.10 SET Command 3-13
3.3.11 SYSTEM Command 3-13
3.3.12 VARY Command 3-14

4 LPAR Configuration Definition 4-1

4.1 Configuration Definition Procedure 4-1
4.1.1 Definition by Creator Program of SCDS 4-1
4.1.2 Definition by Frame 4-1
4.2 Definition of Basic Items 4-4
4.3 Definition of LPAR Resources 4-8
4.3.1 LPAR Resource Definition Overview 4-8
4.3.2 Rules for Allocation of MS and ES at LPAR Activation 4-12
4.3.3 Guide to Service Ratio Definition 4-12
4.4 Definition of LPAR Control Items 4-17
4.5 Definition of Instruction Processors 4-22
4.5.1 Definition Operation on Frames 4-22
4.5.2 Scheduling Matrix between Physical and Logical IPs 4-26
4.5.3 Restrictions in Assignment of Logical IPs to Physical IPs 4-28
4.6 Definition of Channels 4-29
4.7 Definition of ICF Items 4-31
4.8 Definition of MLPF System Option Setting 4-32
4.9 Definition of PF Keys 4-33
4.10 Definition of MLPF Policy 4-34
4.11 Definition of LPAR Local TOD and Time Accelerator 4-36
4.12 (Intentionally Left Blank) 4-37
4.13 Saving of Definition Information 4-38

5 Introduction to MLPF Operating Procedures 5-1

5.1 Overview of MLPF Operations 5-1
5.2 LPAR Frames 5-1
5.2.1 Frame Structure and Means of Frame Selection 5-1
5.2.2 Functional Outline of LPAR Frames 5-2
5.2.3 Basic Frames in LPAR Mode 5-4
5.3 LPAR Control Commands 5-5
5.4 User Level Restrictions on LPAR Frames and LPAR Control Commands 5-6

6 LPAR Operation Basics 6-1

6.1 Initial Setup 6-1
6.2 Configuration Definition 6-3
6.3 Activation 6-4
6.3.1 Automatic Activation 6-4
6.3.2 Manual Activation 6-4
6.3.3 Operation in Response to Activation Message 6-5
6.4 System Operation 6-6
6.4.1 System Operation Using LPAR Frames 6-6
6.4.2 System Operation Using LPAR Control Commands 6-6
6.5 Deactivation 6-8
6.6 Reconfiguration 6-9
6.6.1 Main Storage and Expanded Storage 6-10

© COMPAREX Informationssysteme GmbH

6.6.2 Instruction Processors 6-12
6.6.3 Channel Paths 6-13
6.7 Protection 6-14
6.8 Special Key Functions 6-14
6.9 Indicator Area Messages 6-14
6.10 Time Machine 6-15
6.11 Time Accelerator 6-17

7 LPAR Frame Details 7-1

7.1 LPRCA Frame 7-2
7.2 LPRCH Frame 7-6
7.3 LPRCTL Frame 7-9
7.4 LPRDEF Frame 7-14
7.5 LPRICF Frame 7-22
7.6 LPRIDX Frame 7-25
7.6.1 LPRIDO Frame 7-26
7.6.2 LPRIDD Frame 7-27
7.7 LPRIPA Frame 7-29
7.8 LPRIPN Frame 7-31
7.9 LPRLOG Frame 7-38
7.10 LPROPC Frame 7-41
7.11 LPROPT Frame 7-43
7.12 LPRPFK Frame 7-45
7.13 LPRPOL Frame 7-46
7.14 LPRRSC Frame 7-50
7.15 LPRSSR Frame 7-54
7.16 LPRSTR Frame 7-56
7.17 LPRSUM Frame 7-58
7.18 LPRTIP Frame 7-61
7.19 LPRTOD Frame 7-65
7.20 (Intentionally Left Blank) 7-70
7.21 SLPAC Frame 7-72
7.22 SLPAD Frame 7-74
7.23 SLPDEF Frame 7-77
7.24 SLPDEV Frame 7-83
7.25 SLPMSG Frame 7-85
7.26 SLPOP Frame 7-87
7.27 SLPOPC Frame 7-89
7.28 SLPSTS Frame 7-91
7.29 SLPSY Frame 7-93
7.30 (Intentionally Left Blank) 7-95

8 LPAR Control Command Details 8-1

8.1 ACTIVATE Command 8-1
8.2 CALL Command 8-1
8.3 CANCEL Command 8-2
8.4 CG Command 8-3
8.5 (Intentionally Left Blank) 8-3
8.6 DEACTIVATE Command 8-4
8.7 DEACTPOL Command 8-4
8.8 LD Command 8-4
8.9 LU Command 8-4
8.10 MVSTOR Command 8-5
8.11 PROTECT Command 8-5
8.12 (Intentionally Left Blank) 8-6
8.13 RETRIEVE Command 8-6
8.14 SAVE Command 8-6
8.15 SELECT Command 8-6
8.16 SETIC Command 8-7
8.17 SYSTEM CHP Command 8-7
8.18 SYSTEM ETAF Command 8-8
8.19 SYSTEM HCCFDUMP Command 8-8

© COMPAREX Informationssysteme GmbH

8.20 SYSTEM INTERRUPT COMMAND 8-9
8.21 SYSTEM IP COMMAND 8-9
8.22 SYSTEM IPL COMMAND 8-10
8.23 SYSTEM ISTEP COMMAND 8-11
8.24 SYSTEM LIPCNV COMMAND 8-11
8.25 SYSTEM LIPOFF COMMAND 8-12
8.26 SYSTEM LIPON COMMAND 8-12
8.27 (INTENTIONALLY LEFT BLANK) 8-12
8.28 SYSTEM RESET COMMAND 8-13
8.29 SYSTEM RESTART COMMAND 8-13
8.30 SYSTEM START COMMAND 8-14
8.31 SYSTEM STOP COMMAND 8-14
8.32 SYSTEM STORESTATUS COMMAND 8-15
8.33 TOD COMMAND 8-15
8.34 UNPROTECT COMMAND 8-16

9 MLPF ERROR RECOVERY 9-1

9.1 OUTLINE OF MLPF ERROR RECOVERY 9-1
9.2 DETAILED RECOVERY ACTIONS AT MLPF ABEND 9-2

10 MLPF MESSAGES 10-1

10.1 INTRODUCTION TO MLPF MESSAGES 10-1
10.1.1 DISPLAY FORMAT 10-1
10.1.2 EXPLANATION FORMAT 10-1
10.1.3 SYMBOLIC CONVENTIONS 10-1
10.2 CONTENTS AND EXPLANATION OF MLPF MESSAGES 10-2

© COMPAREX Informationssysteme GmbH

List of Figures

FIGURE 2-1 CONFIGURATIONS IN BASIC MODE AND LPAR MODE (WITH 4 LPARS) 2-3
FIGURE 3-1 DATA STRUCTURE AND HIERARCHY OF MLPF POLICY 3-1
FIGURE 4-1 DEFINITION OF BASIC CONFIGURATION ITEMS ON C2000-XXA, C2000-XXB, AND C2000-XXC 4-4
FIGURE 4-2 DEFINITION OF BASIC CONFIGURATION ITEMS ON CF2000-0XA 4-5
FIGURE 4-3 DEFINITION OF LPAR RESOURCES ON C2000-XXA, C2000-XXB, AND C2000-XXC 4-9
FIGURE 4-4 DEFINITION OF LPAR RESOURCES ON CF2000-0XA 4-10
FIGURE 4-5 CALCULATION OF CPU RESOURCE USAGE RATIO 4-13
FIGURE 4-6 DEFINITION OF LPAR CONTROL ITEMS ON C2000-XXA, C2000-XXB, AND C2000-XXC 4-18
FIGURE 4-7 DEFINITION OF LPAR CONTROL ITEMS ON CF2000-0XA 4-19
FIGURE 4-8 DEFINITION OF IPS ON C2000-XXA, C2000-XXB, AND C2000-XXC IN NON-VSF MODE 4-23
FIGURE 4-9 DEFINITION OF IPS ON C2000-XXA, C2000-XXB, AND C2000-XXC IN VSF MODE 4-24
FIGURE 4-10 DEFINITION OF IPS ON CF2000-0XA 4-25
FIGURE 4-11 COMBINATIONS OF PIPS AND LIPS WITH PIPGSF DISABLED 4-27
FIGURE 4-12 COMBINATIONS OF PIPS AND LIPS WITH PIPGSF ENABLED 4-27
FIGURE 4-13 RESTRICTIONS IN ASSIGNMENT OF LOGICAL IPS TO PHYSICAL IPS 4-28
FIGURE 4-14 DEFINITION OF CHANNELS ON C2000-XXA, C2000-XXB, AND C2000-XXC 4-29
FIGURE 4-15 DEFINITION OF CHANNELS ON CF2000-0XA 4-29
FIGURE 4-16 DEFINITION OF ICF ITEMS ON LPRICF FRAME 4-31
FIGURE 4-17 DEFINITION OF MLPF SYSTEM OPTION SETTING ON LPROPT FRAME 4-32
FIGURE 4-18 DEFINITION OF PF KEYS ON LPRPFK FRAME 4-33
FIGURE 4-19 DEFINITION OF MLPF POLICY ON LPRPOL FRAME 4-34
FIGURE 4-20 DEFINITION ON LPRTOD FRAME 4-36
FIGURE 4-21 (INTENTIONALLY LEFT BLANK) 4-37
FIGURE 4-22 SYSIML CLEAR AND SAVE WITH UPDATED SCDS 4-39
FIGURE 4-23 SYSIML CLEAR AND SAVE WITHOUT UPDATING SCDS 4-40
FIGURE 5-1 FRAME STRUCTURE AND MEANS OF FRAME SELECTION 5-2
FIGURE 5-2 ADDITIONAL MEANS OF SELECTION AMONG LPAR FRAMES 5-2
FIGURE 6-1 MODSEL ON C000-XXA, C2000-XXB, OR C2000-XXC 6-2
FIGURE 6-2 OPRCTL FRAME 6-2
FIGURE 6-3 SAMPLE LPRSSR FRAME TEXTS IN RESPONSE TO WARNING MESSAGES 6-5
FIGURE 6-4 EXAMPLE OF STATIC RECONFIGURATION OF MS 6-11
FIGURE 7-1 LPRCA FRAME ON C2000-XXA, C2000-XXB, AND C2000-XXC 7-2
FIGURE 7-2 LPRCA FRAME ON CF2000-0XA 7-3
FIGURE 7-3 LPRCH FRAME ON C2000-XXA, C2000-XXB, AND C2000-XXC 7-6
FIGURE 7-4 LPRCH FRAME ON CF2000-0XA 7-6
FIGURE 7-5 LPRCTL FRAME ON C2000-XXA, C2000-XXB, AND C2000-XXC 7-10
FIGURE 7-6 LPRCTL FRAME ON CF2000-0XA 7-11
FIGURE 7-7 LPRDEF FRAME ON C2000-XXAV AND C2000-XXB (SHEET 1 OF2) 7-15
FIGURE 7-7 LPRDEF FRAME ON C2000-XXA AND C2000-XXB (SHEET 2 OF 2) 7-16
FIGURE 7-8 LPRDEF FRAME ON CF2000-0XA 7-17
FIGURE 7-9 LPRDEF FRAME ON C2000-XXC (SHEET 1 OF 2) 7-18
FIGURE 7-9 LPRDEF FRAME ON C2000-XXC (SHEET 2 OF 2) 7-19
FIGURE 7-10 LPRICF FRAME 7-22
FIGURE 7-11 LPRIDX FRAME 7-25
FIGURE 7-12 LPRIDO FRAME 7-26
FIGURE 7-13 LPRIDD FRAME ON C2000-XXA, C2000-XXB, AND C2000-XXC 7-27
FIGURE 7-14 LPRIDD FRAME ON CF2000-0XA 7-27
FIGURE 7-15 LPRIPA FRAME ON C2000-XXA, C2000-XXB, AND C2000-XXC 7-29
FIGURE 7-16 LPRIPA FRAME ON CF2000-0XA 7-30
FIGURE 7-17 LPRIPN FRAME ON C2000-XXA AND C2000-XXB (SHEET 1 OF 2) 7-31
FIGURE 7-17 LPRIPN FRAME ON C2000-XXA AND C2000-XXB (SHEET 2 OF 2) 7-32
FIGURE 7-18 LPRIPN FRAME ON CF2000-0XA 7-33
FIGURE 7-19 LPRIPN FRAME ON C2000-XXC (SHEET 1 OF 2) 7-34
FIGURE 7-19 LPRIPN FRAME ON C2000-XXC (SHEET 2 OF 2) 7-35
FIGURE 7-20 LPRLOG FRAME (SHEET 1 OF 2) 7-38
FIGURE 7-25 LPRLOG FRAME (SHEET 2 OF 2) 7-39
FIGURE 7-21 LPROPC FRAME 7-41
FIGURE 7-22 LPROPT FRAME 7-43
FIGURE 7-23 LPRPFK FRAME 7-45
FIGURE 7-24 LPRPOL FRAME—POLICY PROFILE 7-46

© COMPAREX Informationssysteme GmbH

FIGURE 7-25 LPRPOL FRAME—POLICY SCRIPT 7-46
FIGURE 7-26 LPRPOL FRAME—POLICY PROFILE LIST 7-47
FIGURE 7-27 LPRPOL FRAME—POLICY SCRIPT LIST 7-47
FIGURE 7-28 LPRRSC FRAME ON C2000-XXA, C2000-XXB, AND C2000-XXC 7-50
FIGURE 7-29 LPRRSC FRAME ON CF2000-0XA 7-51
FIGURE 7-30 LPRSSR FRAME 7-54
FIGURE 7-31 LPRSTR FRAME ON C2000-XXA, C2000-XXB, AND C2000-XXC 7-56
FIGURE 7-32 LPRSTR FRAME ON CF2000-0XA 7-56
FIGURE 7-33 LPRSUM FRAME ON C2000-XXA, C2000-XXB, AND C2000-XXC 7-58
FIGURE 7-34 LPRSUM FRAME ON CF2000-0XA 7-59
FIGURE 7-35 LPRTIP FRAME ON C2000-XXA AND C2000-XXB 7-61
FIGURE 7-36 LPRTIP FRAME ON C2000-XXC 7-61
FIGURE 7-37 LPRTOD FRAME ON C2000-XXA, C2000-XXB, AND C2000-XXC 7-66
FIGURE 7-38 LPRTOD FRAME ON CF2000-0XA 7-67
FIGURE 7-39 (INTENTIONALLY LEFT BLANK) 7-70
FIGURE 7-40 (INTENTIONALLY LEFT BLANK) 7-70
FIGURE 7-41 SLPAC FRAME ON C2000-XXA AND C2000-XXB 7-72
FIGURE 7-42 SLPAC FRAME ON C2000-XXC 7-72
FIGURE 7-43 SLPAD FRAME 7-74
FIGURE 7-44 SLPDEF FRAME ON C2000-XXA AND C2000-XXB 7-77
FIGURE 7-45 SLPDEF FRAME ON CF2000-0XA 7-78
FIGURE 7-46 SLPDEF FRAME ON C2000-XXC 7-79
FIGURE 7-47 SLPDEV FRAME 7-83
FIGURE 7-48 SLPMSG FRAME 7-85
FIGURE 7-49 SLPOP FRAME ON C2000-XXA AND C2000-XXB 7-87
FIGURE 7-50 SLPOP FRAME ON C2000-XXC 7-87
FIGURE 7-51 SLPOPC FRAME 7-89
FIGURE 7-52 SLPSTS FRAME ON C2000-XXA, C2000-XXB, OR CF2000-0XA 7-91
FIGURE 7-53 SLPSTS FRAME ON C2000-XXC 7-91
FIGURE 7-54 SLPSY FRAME ON C2000-XXA AND C2000-XXB 7-93
FIGURE 7-55 SLPSY FRAME ON C2000-XXC 7-93
FIGURE 7-56 (INTENTIONALLY LEFT BLANK) 7-95
FIGURE 7-57 (INTENTIONALLY LEFT BLANK) 7-95
FIGURE 9-1 MLPF ERROR RECOVERY FLOWCHART 9-1
FIGURE 9-2 PSW FORMAT AT MLPF ABEND 9-2

© COMPAREX Informationssysteme GmbH

List of Tables

TABLE 1-1 DEVIATIONS OF MS/ES UNIT SIZE BOUNDARY BY PROCESSOR MODELS 1-3
TABLE 1-2 DEVIATIONS BY PROCESSOR MODELS IN MLPF USER'S GUIDE 1-4
TABLE 1-3 DEVIATIONS BY PROCESSOR MODELS IN MLPF OPERATING PROCEDURES 1-7
TABLE 1-4 DEVIATIONS BY PROCESSOR MODELS IN MLPF MESSAGES 1-10
TABLE 1-5 (INTENTIONALLY LEFT BLANK) 1-10
TABLE 2-1 APPLICABLE OPERATING MODES IN LPAR MODE 2-2
TABLE 2-2 LOGICAL HARDWARE CONFIGURATION FOR LPARS 2-4
TABLE 2-3 CPU ID FORMATS 2-5
TABLE 3-1 POLICY FUNCTION CODES 3-2
TABLE 3-2 CONDITION CODES FOR POLICY DIAGNOSE INSTRUCTION 3-3
TABLE 3-3 COMPLETION CODES FOR POLICY DIAGNOSE INSTRUCTION 3-3
TABLE 3-4 TYPE-1 PCB FORMAT 3-5
TABLE 3-5 TYPE-2 PCB FORMAT 3-6
TABLE 3-6 COMMAND LIST 3-8
TABLE 4-1 DEFINITION ITEMS FOR LPAR CONFIGURATION 4-1
TABLE 4-2 OPERATION DETAILS FOR DEFINITION OF BASIC CONFIGURATION ITEMS 4-6
TABLE 4-3 OPERATION DETAILS FOR DEFINITION OF LPAR RESOURCES 4-11
TABLE 4-4 SAMPLE CALCULATIONS OF CPU RESOURCE USAGE RATIOS 4-14
TABLE 4-5 SAMPLE ADJUSTMENT AT FRACTIONAL USE OF SHARED-MODE CPU RESOURCE 4-14
TABLE 4-6 SAMPLE ADJUSTMENT AT EXCESSIVE USE OF SHARED-MODE CPU RESOURCE 4-15
TABLE 4-7 SAMPLE ADJUSTMENT AT EXCESSIVE SHARED-MODE CPU RESOURCE WITH PIPGSF 4-16
TABLE 4-8 SAMPLE PITFALL AND SOLUTION IN AUTOADJUSTMENT WITH PIPGSF 4-16
TABLE 4-9 OPERATION DETAILS FOR DEFINITION OF LPAR CONTROL ITEMS 4-20
TABLE 4-10 OPERATION DETAILS FOR DEFINITION OF INSTRUCTION PROCESSORS 4-26
TABLE 4-11 SCHEDULING MATRIX BETWEEN PIPS AND LIPS WITH PIPGSF DISABLED 4-26
TABLE 4-12 SCHEDULING MATRIX BETWEEN PIPS AND LIPS WITH PIPGSF ENABLED 4-27
TABLE 4-13 OPERATION DETAILS FOR DEFINITION OF CHANNELS 4-30
TABLE 4-14 OPERATION DETAILS FOR DEFINITION OF ICF ITEMS 4-31
TABLE 4-15 OPERATION DETAILS FOR DEFINITION OF MLPF SYSTEM OPTION SETTING 4-32
TABLE 4-16 OPERATION DETAILS FOR DEFINITION OF MLPF POLICY 4-35
TABLE 4-17 OPERATION DETAILS ON LPRTOD FRAME 4-36
TABLE 4-18 (INTENTIONALLY LEFT BLANK) 4-37
TABLE 5-1 LIST OF LPAR FRAMES 5-2
TABLE 5-2 BASIC FRAMES AFFECTED IN LPAR MODE 5-4
TABLE 5-3 LIST OF LPAR CONTROL COMMANDS 5-5
TABLE 5-4 USER LEVEL RESTRICTIONS ON LPAR FRAMES 5-7
TABLE 5-5 USER LEVEL RESTRICTIONS ON LPAR CONTROL COMMANDS 5-13
TABLE 6-1 CHANGEABILITY OF LPAR CONFIGURATION DEFINITION ITEMS 6-9
TABLE 7-1 LPRCA FRAME—FRAME COMMANDS 7-4
TABLE 7-2 LPRCA FRAME—DISPLAY FIELDS 7-4
TABLE 7-3 LPRCH FRAME—FRAME COMMANDS AND DEFINITION FIELDS 7-7
TABLE 7-4 LPRCH FRAME—DISPLAY FIELDS 7-7
TABLE 7-5 LPRCTL FRAME—FRAME COMMANDS AND DEFINITION FIELDS 7-12
TABLE 7-6 LPRCTL FRAME—DISPLAY FIELDS 7-13
TABLE 7-7 LPRDEF FRAME—FRAME COMMANDS AND DEFINITION FIELDS 7-20
TABLE 7-8 LPRDEF FRAME—DISPLAY FIELDS 7-21
TABLE 7-9 LPRICF FRAME—FRAME COMMANDS AND DEFINITION FIELDS 7-23
TABLE 7-10 LPRICF FRAME—DISPLAY FIELDS 7-24
TABLE 7-11 LPRIDX FRAME—FRAME COMMANDS 7-25
TABLE 7-12 LPRIDX FRAME—DISPLAY FIELDS 7-25
TABLE 7-13 LPRIDO FRAME—FRAME COMMANDS 7-26
TABLE 7-14 LPRIDD FRAME—FRAME COMMANDS 7-28
TABLE 7-15 LPRIPA FRAME—FRAME COMMANDS 7-30
TABLE 7-16 LPRIPA FRAME—DISPLAY FIELDS 7-30
TABLE 7-17 LPRIPN FRAME—FRAME COMMANDS AND DEFINITION FIELDS 7-36
TABLE 7-18 LPRIPN FRAME—DISPLAY FIELDS 7-37
TABLE 7-19 LPRLOG FRAME—FRAME COMMANDS 7-40
TABLE 7-20 LPRLOG FRAME—DISPLAY FIELDS 7-40
TABLE 7-21 LPROPC FRAME—FRAME COMMANDS AND DEFINITION FIELDS 7-41
TABLE 7-22 LPROPC FRAME – DISPLAY FIELDS 7-42

© COPYRIGHT COMPAREX SYSTEMS GMBH

TABLE 7-23 LPROPT FRAME—FRAME COMMANDS AND DEFINITION FIELDS 7-43
TABLE 7-24 LPROPT FRAME—DISPLAY FIELDS 7-44
TABLE 7-25 LPROPT FRAME—TARGET COMMANDS FOR CONFIRMATION OPTION 7-44
TABLE 7-26 LPRPFK FRAME—FRAME COMMANDS AND DEFINITION FIELDS 7-45
TABLE 7-27 LPRPFK FRAME—DISPLAY FIELDS 7-45
TABLE 7-28 PRPOL FRAME—COMMON FRAME COMMANDS 7-48
TABLE 7-29 LPRPOL FRAME—FRAME COMMANDS AND DEFINITION FIELDS BY TARGET 7-48
TABLE 7-30 LPRPOL FRAME—DISPLAY FIELDS 7-49
TABLE 7-31 LPRRSC FRAME—FRAME COMMANDS AND DEFINITION FIELDS 7-52
TABLE 7-32 LPRRSC FRAME—DISPLAY FIELDS 7-53
TABLE 7-33 LPRSSR FRAME—FRAME COMMANDS AND DEFINITION FIELD 7-55
TABLE 7-34 LPRSSR FRAME—DISPLAY FIELDS 7-55
TABLE 7-35 LPRSTR FRAME—DISPLAY FIELDS 7-57
TABLE 7-36 LPRSUM FRAME—DEFINITION FIELD 7-60
TABLE 7-37 LPRSUM FRAME—DISPLAY FIELDS 7-60
TABLE 7-38 LPRTIP FRAME—FRAME COMMANDS AND DEFINITION FIELDS 7-62
TABLE 7-39 LPRTIP FRAME—MICROFILTER ACTIVATION CONDITIONS 7-63
TABLE 7-40 LPRTIP FRAME—DEFINITION FIELD OF UL AND LL 7-63
TABLE 7-41 LPRTIP FRAME—DISPLAY FIELDS 7-63
TABLE 7-42 LPRTOD FRAME—FRAME COMMANDS AND DEFINITION FIELDS 7-68
TABLE 7-43 PRTOD FRAME—DISPLAY FIELDS 7-69
TABLE 7-44 (INTENTIONALLY LEFT BLANK) 7-71
TABLE 7-45 (INTENTIONALLY LEFT BLANK) 7-71
TABLE 7-46 SLPAC FRAME—FRAME COMMANDS AND DEFINITION FIELDS 7-73
TABLE 7-47 SLPAC FRAME—DISPLAY FIELDS 7-73
TABLE 7-48 SLPAD FRAME—FRAME COMMANDS AND DEFINITION FIELD 7-75
TABLE 7-49 SLPAD FRAME – DISPLAY FIELDS 7-76
TABLE 7-50 SLPDEF FRAME—FRAME COMMANDS AND DEFINITION FIELDS 7-80
TABLE 7-51 SLPDEF FRAME—DISPLAY FIELDS 7-82
TABLE 7-52 SLPDEV FRAME—FRAME COMMANDS AND DEFINITION FIELDS 7-84
TABLE 7-53 SLPDEV FRAME—DISPLAY FIELDS 7-84
TABLE 7-54 SLPMSG FRAME—DEFINITION FIELDS 7-85
TABLE 7-55 SLPMSG FRAME—DISPLAY FIELDS 7-86
TABLE 7-56 SLPOP FRAME—FRAME COMMANDS AND DEFINITION FIELDS 7-88
TABLE 7-57 SLPOP FRAME—DISPLAY FIELDS 7-88
TABLE 7-58 SLPOPC FRAME—FRAME COMMANDS AND DEFINITION FIELDS 7-89
TABLE 7-59 SLPOPC FRAME—DISPLAY FIELDS 7-90
TABLE 7-60 SLPSTS FRAME—DISPLAY FIELDS 7-92
TABLE 7-61 SLPSY FRAME—FRAME COMMANDS AND DEFINITION FIELDS 7-94
TABLE 7-62 SLPSY FRAME—DISPLAY FIELDS 7-94
TABLE 7-63 (INTENTIONALLY LEFT BLANK) 7-96
TABLE 7-64 (INTENTIONALLY LEFT BLANK) 7-96
TABLE 8-1 EXCLUSIVE COMBINATIONS AMONG LPAR FRAMES 8-3
TABLE 9-1 DETAILS OF ABEND CODES AND REASON CODES 9-3

© COMPAREX Information Systems GmbH

LIST OF ABBREVIATIONS

ADMF	Asynchronous Data Mover Facility
AE	asynchronous event
AEID	asynchronous event ID
ALET	access list entry token
Alt	Alternate (key)
AO	Advanced Operator (user level)
AP	Alternate Processor
AR	access register
C	COMPARE (instruction) in RX forma
CC	condition code
CCW	channel command word
CD	Console Device
CDSG	Configuration Data Set Generator
CDX	Cryptographic Domain Index
CE	customer engineer; Customer Engineer (user level)
CF	Coupling Facility
CFR	Coupling Facility Receiver (channel)
CFS	Coupling Facility Sender (channel)
CH	channel; COMPARE HALFWORD (instruction)
CHP	Channel Processor or channel path
CHPID	channel path ID
CL	COMPARE LOGICAL (instruction) in RX format
CLC	COMPARE LOGICAL (instruction) in SS format
CLI	COMPARE LOGICAL (instruction) in SI format
CLM	COMPARE LOGICAL CHARACTERS UNDER MASK (instruction)
CLR	COMPARE LOGICAL (instruction) in RR format
CNC	Connection Channel
CP	COMPARE DECIMAL (instruction)
CPC	central processor complex
CPCID	central processor complex identification
CPU	Central Processing Unit
CPUID	Central Processing Unit identification
CR	COMPARE (instruction) in RR format
CRW	channel report word
CTC	Channel to Channel
Ctrl	Control (key)
CVC	Converter Channel
DAT	Dynamic Address Translation
DCC	deferred condition code
DRM	Dynamic I/O Reconfiguration Management
DSB	device status byte
ECB	event control block
ECN	Engineering Change Notice
EHSA	Extended HSA
EID	element ID
EMIF	ESCON Multiple Image Facility
ES	expanded storage
ESA	Enterprise Systems Architecture
Esc	Escape (key)
ESCH	Extended Serial Channel
ESCON	Enterprise Systems Connection
ESE	ES extent
ESO	ES origin
ESR	Reserved ES size
ETAF	External Timer Attachment Feature
ETR	External Timer Reference
FAR	Floating Address Register
GB	gigabyte(s)
GR	general register
HCCF	Highspeed Coupling Control Feature

© COMPAREX Informationssysteme GmbH

HCCFA	Highspeed Coupling Control Feature Assist
HCD	Hardware Configuration Definition
hex	hexadecimal
HISTEP III	Hitachi System Test and Evaluation Program Type-III
HMC	Hardware Management Console
HSA	Hardware System Area
HSW	HVA status word
HVA	Hypervisor Assist
IBM	International Business Machines Corporation
IC	instruction counter
ICC	interface control check
ICF	Integrated Cryptographic Facility
ICMF	Integrated Coupling Migration Facility
IMPL	initial microprogram loading
IntCF	Integrated Coupling Facility
IO, I/O	input/output (operation or device)
IOCDS	I/O Configuration Data Set
IOCP	Input/Output Configuration Program
IOP	Input Output Processor
IP	Instruction Processor
IPL	initial program loading
ISC	interruption-subclass code
ISCH	Inter-System Coupling Channel
KSU	Key Storage Unit
LIP	logical IP
LM	limit mode
LPAR	logical partition; logically-partitioned (mode)
MASDEF	Multiple Access Spool Definition
MB	megabyte(s)
M byte(s)	megabyte(s)
MCIC	machine check interruption code
MCK	machine check
MDC	machine-dependent constants
MIH	Missing Interrupt Handler
MLPF	Multiple Logical Processor Feature
ms	millisecond(s)
MS	main storage
MSCH	MODIFY SUBCHANNEL (instruction)
MSE	MS extent
MSO	MS origin
MSR	Reserved MS size
MVS	Multiple Virtual Storage
OEM	original equipment manufacturer; original equipment manufacturing
Op	Operator (user level)
ORB	operation request block
OS	operating system(s)
OSC	Open Systems Connection
PA1	Program Access 1 (key)
PER	Program Event Recording
PF	Program Function (key)
PGM INT	program interruption
PIM	path installed mask
PIP	physical IP
PIPGSF	Physical IP Group Scheduling Facility
PMC	Processor Management Console
PRB	Problem mode
PSW	program status word
RMF	Resource Measurement Facility
S	SUBTRACT (instruction) in RX format
SAL	SET ADDRESS LIMIT (instruction)
SCDS	System Configuration Data Set
SCH	subchannel
SCHIB	subchannel information block

© COMPAREX Informationssysteme GmbH

SCK	SET CLOCK (instruction)
SCKC	SET CLOCK COMPARATOR (instruction)
SCP	system control program
SD	status description
Sel Frame	Select Frame (key)
SH	SUBTRACT HALFWORD (instruction)
SIE	Start Interpretive Execution
SIGP	SIGNAL PROCESSOR (instruction)
SL	SUBTRACT LOGICAL (instruction) in RX format
SLR	SUBTRACT LOGICAL (instruction) in RR format
SP	System Product; System Programmer (user level); SUBTRACT DECIMAL (instruction)
SPT	SET CPU TIMER (instruction)
SPV	Supervisor mode
SR	SUBTRACT (instruction) in RR format
SSB	subchannel status byte
SSCH	START SUBCHANNEL (instruction)
SSR	system status record or system status recording
STCK	STORE CLOCK (instruction)
STCKC	STORE CLOCK COMPARATOR (instruction)
STPT	STORE CPU TIMER (instruction)
STSCH	STORE SUBCHANNEL (instruction)
SVC	supervisor-call
SVP	Service Processor
SYSIML	system initial microprogram loading
TIC	transfer in channel (command)
TMP	Test and Maintenance Program
TOD	time-of-day
VM	Virtual Machine (operating system); virtual machine
XA	Extended Architecture

Note: *Common abbreviations, frame IDs, frame codes, LPAR control commands, and special mnemonics in messages or frames are excluded.*

© COMPAREX Informationssysteme GmbH

⚠ Safety Summary

These are the general safety guidelines.
All existing and future European and national safety regulations have to be considered.

1. ⚠ General Safety Guidelines

- Before operating the machine, read the following instructions carefully:
- Follow all the operating procedures provided in this manual.
- Pay special attention to and follow all the hazard warnings on the machine and in the manual. Failure to do so can cause injury to yourself or damage to the machine.
- The hazard warnings which appear on the warning labels on the machine or in the manual have one of the alert headings consisting of an alert symbol and a signal word, DANGER, WARNING or CAUTION as tabulated below. The signal word “NOTICE” is used to present warnings which are not directly related to personal injury hazards.
- If any physical accident such as abnormal noise, smell, smoke or falling down occurs on the processor complex while running, immediately power off the processor complex by pulling one of the UNIT EMERGENCY POWER OFF switches on the C2000 and CF2000 Processor Unit
  See 2. below for details.
- Clearly identify each destination equipment of primary power sources with proper indication, e.g., a label on the switch on the power distribution panel or board.
- Do not perform any operation or action in any way other than as provided in this manual. When in doubt, call the designated field engineer.
- Keep in mind that the hazard warnings in this manual or on the machine cannot cover every possible case, as it is impossible to predict and evaluate all circumstances beforehand. Be alert and use your common sense.

⚠ **DANGER**	indicates an imminently hazardous situation which, if not avoided, will result in death or serious injury.
⚠ **WARNING**	indicates a potentially hazardous situation which, if not avoided, can result in death or serious injury.
⚠ **CAUTION**	indicates a hazardous situation which, if not avoided, will or can result in minor or moderate injury, or serious damage of product.
⚠	The alert symbol shown left precedes every signal word for hazard warnings, and appears in safety related descriptions in the manual.

© COMPAREX Informationssysteme GmbH

2. ⚠ UNIT EMERGENCY POWER OFF Switches

- For the purpose of powering off in an emergency, UNIT EMERGENCY POWER OFF switches (illustrated right) are provided on the C2000 and CF2000 Processor Unit
- In using a UNIT EMERGENCY POWER OFF switch, first pull it up and then pull it toward you as illustrated.
- Pulling one of the UNIT EMERGENCY POWER OFF switches instantly shuts down the processor complex other than the Console Devices, ignoring the system's power off sequence. Jobs in progress are aborted and their integrity after recovery is not guaranteed. Hence, this method should be used only in an emergency.
- None of the UNIT EMERGENCY POWER OFF switches can turn off any I/O device.
- When pulled, a UNIT EMERGENCY POWER OFF switch locks itself to prevent further powering on and requires trained and qualified personnel for recovery. Contact the designated field engineer at once.

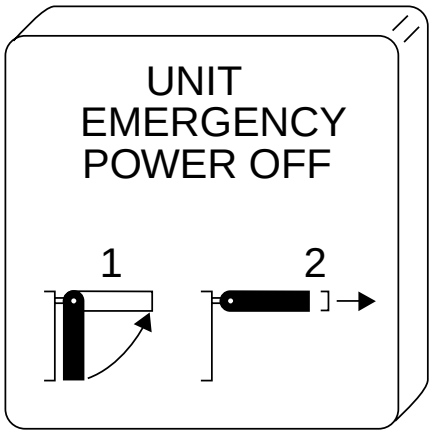

3. ⚠ Hazard Warning Statements

The following are the hazard warning statements contained in this manual. No DANGER or WARNING statement is contained in this manual.

⚠ CAUTION Statement

Deactivation of an LPAR would mean powering off of a processor complex in Basic mode. Pay extreme attention to this deactivation operation (see section 6.5, page 6-8).

Do not use LPAR Local TOD Facility on any LPAR configured in a sysplex. Such use affects the entire sysplex and the result is unpredictable (see section 6.10, page 6-15).

Enabling of Time Machine Facility causes a serious degradation of the Instruction Processor performance. Therefore, this facility should only be enabled on a specific physical IP and a specific LPAR assigned to that IP (see section 6.10, page 6-15).

Because user program may use the invalid operation code in normal process, Time Warp Facility should be used only on a specific LPAR (see section 6.10, page 6-15).

Do not use Time Accelerator on any LPAR configured in a sysplex. Such use affects the entire sysplex and the result is unpredictable (see section 6.11, page 6-17).

© COMPAREX Informationssysteme GmbH

4. Arrangement of Operation Environment

Here are some advices to make the operation comfortable.

4.1 Room Environment for Operation

- High temperature, high humidity, or dust may cause damage to the machine as well as the operator's health. To prevent such damage, keep your operating place away from sunlight or heater, and away from high humidity and dust.
- Of each Console Device, the main processor and the color monitor have air vents to release the generated heat. Therefore, blocking these vents will cause overheat. Keep enough space, i.e., 50 mm (2 inches) or more, for the airway.

4.2 Workspace for Operation

4.2.1 Desk and Chair

- Operating in an uncomfortable position will tire the operator. In order to operate in a relaxed posture, adjust the heights of desk and chair so that the operator's forearms and thighs are parallel to the floor.
- Selecting a good chair is important to keep the operator in a comfortable position. A moderately soft seat and a backrest fit to the operator's lower back are recommended.

4.2.2 Keyboard

- Adjust the keyboard feet, if necessary, to obtain the most comfortable keyboard angle. Adjust it so that soft typing is possible.

4.2.3 Display (Color Monitor)

- Place the display at such a height (on a monitor stand if appropriate) that the operator can view the display screen in parallel or slightly downward, and at such a distance that the operator can maintain a comfortable viewing distance of 510 to 610 mm (20 to 24 inches).
- The operator can change the angle and the direction of the display by tilting and swivelling it. Adjust it so that the operator can view the screen without twisting his or her body.
- To prevent glare and reflection, adjust the display angle, or block the sunlight with curtains or blinds. An anti-glare filter might be useful, but its effect on the clarity of the displayed image should be considered.
- The operator can adjust the brightness and contrast of the displayed image using the buttons provided in the lower front of the display (normally covered with the front panel). Push-open the panel, and press the + or – (or ↑ or ↓) button as required for brightness (☼) or contrast (◑) until a proper display image is obtained. Generally, a slightly dark brightness is better for the operator's eyes.
- To keep the clarity of the screen, clean the screen surface with soft cloth periodically.

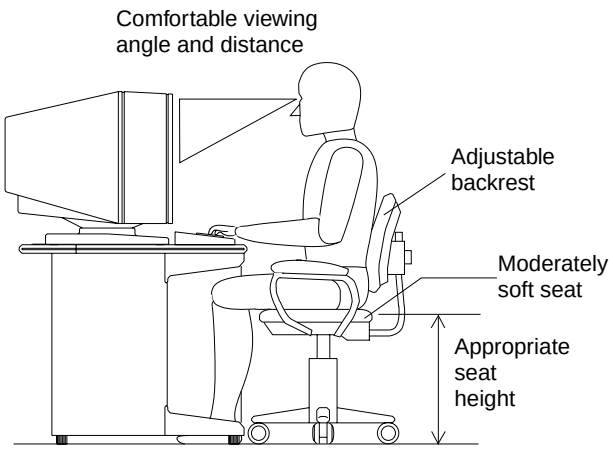

© COMPAREX Informationssysteme GmbH

1 GENERAL INFORMATION

1.1 About This Document

This document describes Hitachi's Multiple Logical Processor Feature (MLPF) release 3.5.1 and its operation mode called logically-partitioned (LPAR) mode. Assumed readers are the OEM customer's marketing/ sales personnel who create the OEM-customer-edited version(s) of this document as the end user manual(s).

To meet several purposes, this document is organized in four parts as shown below.

- Part 1 consists of chapter 1, which introduces the purpose and the application of this document, provides an overview of new features introduced with MLPF 3.5.1, explains how the user's LPAR configuration information in MLPF 3.5.0 is converted with MLPF 3.5.1, and summarizes model-dependent deviations in MLPF functions.
- Part 2 serves as an MLPF user's guide, and consists of three chapters:
  - Chapter 2 introduces an overview of MLPF and logical partitioning, and outlines the features of MLPF.
  - Chapter 3 describes MLPF Policy.
  - Chapter 4 shows how to set up each logical partition by defining the LPAR configuration information and the LPAR control information.
- Part 3 serves as an MLPF operation manual, and consists of five chapters:
  - Chapter 5 introduces an overview of MLPF operations, LPAR frames, and LPAR control commands.
  - Chapter 6 shows LPAR operation basics.
  - Chapter 7 explains LPAR frames in detail.
  - Chapter 8 explains LPAR control commands in detail.
  - Chapter 9 shows how to recover MLPF errors.
- Part 4 consists of chapter 10, which serves as an MLPF message manual.

1.2 Applicable Processor Models

MLPF release 3.5.1 applies to the following processor types and models. Unless otherwise specifically mentioned, description represented by processor group applies to all processor types and models.

- C2000 models (0- thru 11-way C2000-xxA Models, 7- thru 11-way C2000-xxB Models, and 0-way CF2000-0xA Models)
- C2000-xxC (4- thru 13-way Turbo Models)

On certain Processor Group, the logically-partitioned operation mode under MLPF is further classified into (normal) LPAR mode and LPAR/EX mode introduced with MLPF release 3.1.2. Except where specifically indicated, references to LPAR mode also apply to LPAR/EX mode throughout this document.

© COMPAREX Informationssysteme GmbH

1.3 Overview of New Features Introduced with MLPF 3.5.1

Sections 1.3.1 thru 1.3.7 summarize new features introduced with MLPF 3.5.1 (including those modified from MLPF 3.5.0).

1.3.1 Support of C2000-xxC and Discontinued Support of M2000

MLPF 3.5.1 supports the C2000-xxC Models in addition to the C2000-xxA Models. The M2000 Processor Group supported in MLPF 3.5.0 is excluded from the scope of support in MLPF 3.5.1.

1.3.2 Virtual Server Facility Phase-1

Virtual Server Facility (VSF) Phase-1 provides the user with virtually fenced, fixed groups of physical IPs called "Virtual Servers" under MLPF 3.5.1 on the C2000-xxA Models, the C2000-xxB Models, and the C2000-xxC Models.

1.3.3 Addition to MLPF Policy

In MLPF 3.5.1, MLPF Policy newly provides the emergency-class Policy Profile, which is automatically activated when the specified event occurs.

1.3.4 Modification to IntCF IP Scheduling Method

In MLPF 3.5.1, an IntCF IP is assigned to a logical IP either in dedicated mode or in shared mode on the target HCCF-LPAR, and the dedicated mode of the target HCCF-LPAR is no longer prerequisite. However, the subject IntCF IP has to be scheduled as dedicated in the same manner as in MLPF 3.5.0.

1.3.5 ICF Partition Dispatching

The ICF Partition Dispatching function, introduced with a fixed time-slice value in MLPF 3.5.0, is extended in MLPF 3.5.1 so as to deal with variable time-slice values. This value is for the shared-mode IP resource in each LPAR to be allocated only to an ICF-installed PIP when an error occurs with a cryptographic instruction. This function applies only when the ICF is installed (hence not applicable to CF2000-0xA or C2000-xxC).

1.3.6 Addition to LPAR Resource Definition Frame

The display of the remaining HSA size is added to the LPAR Resource Definition (LPRRSC) frame, only available when the total MS size is more than 2GB.

1.3.7 Changes and Improvements in MLPF Messages

Because of new features, relevant MLPF messages are added, modified, or deleted. In addition, the messages not affected by new features are entirely reviewed and some of them are improved.

© COMPAREX Informationssysteme GmbH

1.4 Summary of Deviations by Processor Models

Sections 1.4.1 thru 1.4.3 summarize the deviations by processor models in each part of this document.

Note: *When the OEM customer intends to create its end user manuals separately for individual processor models based on this document, such deviations must be considered also in the front matter (and the safety summary).*

Before looking into model-dependent deviations in each part of this document, refer Table 1-1 for the deviations of MS/ES unit size boundary by processor models.

Table 1-1 Deviations of MS/ES Unit Size Boundary by Processor Models

Processor Model	**MS or ES Unit Size**			
	Real MS Capacity Expansion		**Real MS Capacity Expansion Mode**	
	Mode Disabled	**Condition**	**Enabled**	**Condition**
C2000-0xA and C2000-xxC/-xxD	1MB	MS ≤ 2GB	1MB	MS+ES ≤ 512MB
			2MB	512MB < MS+ES ≤ 1GB
			4MB	1GB < MS+ES ≤ 2GB
			8MB	2GB < MS+ES ≤ 4GB
			16MB	4GB < MS+ES ≤ 8GB
			32MB	8GB < MS+ES ≤ 16GB
			64MB	16GB < MS+ES ≤ 32GB

Note: *The setting of Real MS Capacity Expansion mode is not released to the end user and must be installed by the customer engineer or the field engineer.*

© COMPAREX Informationssysteme GmbH

1.4.1 Deviations in MLPF User's Guide

Table 1-2 provides the deviations by processor models in MLPF user's guide.

Table 1-2 Deviations by Processor Models in MLPF User's Guide

Chapter	Section or Subsection	Deviation by Processor Models (Sheet 1 of 3)	
		Subject	**Description**
2	2.1	LPAR operating mode	• C2000-xxA/C2000-xxC: [Normal] LPAR mode only.
		Availability of Basic mode	• Not available to CF2000.
		Entrance into LPAR mode	• C2000-xxA/C2000-xxB/C2000-xxC: Frame operation and re-IPL. • CF2000-0xA: Not necessary (LPAR mode by default).
	2.2	LPAR CPU mode	• M2000/C2000-xx6/C2000-xxA/C2000-xxB/ C2000-xxC: ESA/390, HCF, and Dummy. • CF2000-0xA: HCF.
		MS/ES unit size	See Table 1-1.
		Channels	• C2000-xx6/C2000-xxA/C2000-xxB/C2000-xxC: EMIF-capable. • CF2000-0xA: EMIF not supported.
		I/O device	• C2000-xxA/C2000-xxB/C2000-xxC: Each I/O device assigned to one or multiple LPARs. • CF2000-0xA: No I/O device assigned to LPAR
		Availability of Basic mode (Figure 2-1)	• Not available to CF2000-0xA
	2.3.1	Prerequisite SCDS	• C2000-xxA/C2000-xxB/C2000-xxC: Needs creation in a similar manner as in Basic mode. • CF2000-0xA: Preinstalled and cannot be altered except LPAR name definition.
	2.3.2	Supported OS	Not applicable to CF2000-0xA.
	2.3.3	Deviations from Basic mode	Not applicable to CF2000-0xA.
	2.3.4	CPU mode in logical hardware configuration (Table 2-2)	• C2000-xxA/C2000-xxB/C2000-xxC: ESA/390, HCF, and Dummy. • CF2000-0xA: HCF.
		MS/ES unit size (Table 2-2)	See Table 1-1.
	2.3.10	ISCH channel types supported	• C2000-xxA/C2000-xxB/C2000-xxC: CFS and CFR. • CF2000-0xA: CFR only.
		Possible causes of recoverable ICC detection on CFR-type ISCH	• C2000-xxA/C2000-xxB/C2000-xxC: Certain commands and operations. • CF2000-0xA: Same as the above except TOD synchronous check and dynamic LPAR reconfiguration operations.
	2.3.12	Availability of Real MS Capacity Expansion	See Table 1-1.
	2.3.13	Availability of 2-IOCDS mode	Not available to C2000-xxA or C2000-xxC.
	2.3.14	Availability of Time Machine facilities	• C2000-xxA/C2000-xxB/C2000-xxC: All. • CF2000-0xA: LPAR Local TOD only.
	2.3.15	Note on Time Accelerator	Not applicable to CF2000-0xA.

© COMPAREX Informationssysteme GmbH

Chapter	Section or Subsection	Deviation by Processor Models (Sheet 2 of 3)	
		Subject	**Description**
2 (cont.)	2.3.18	Availability of Policy Diagnose instruction	Not available to CF2000-0xA.
	2.3.19	Availability of Dummy mode	Not available to CF2000-0xA.
	2.3.23	Architectural deviations in LPAR mode	Not applicable CF2000-0xA.
3	3.1 and 3.2	Availability of Policy Diagnose instruction	Not available to CF2000-0xA.
	3.3.4	Availability of DEFINE command operands	• C2000-xxA/C2000-xxB: All. • CF2000-0xA: All except ESA and DMY of CPUMODE, IPLUNIT, DIPLUNIT, IPLPARM, AD, TM, TW, KSU, KE, SPC, ENA, and CDX. • C2000-xxC: All except KSU, KE, SPC, ENA, and CDX.
		Applicable frames for functional equivalents of DEFINE command	• C2000-xxA/C2000-xxB: All. • CF2000-0xA: All except LPRICF, SLPOP, and SLPSY. • C2000-xxC: All except LPRICF.
	3.3.5	Effectivity of IPL command	• Meaningless and not effective to CF2000-0xA.
	3.3.9	Applicable frames for functional equivalents of SAVE command	• C2000-xxA/C2000-xxB: All. • CF2000-0xA/C2000-xxC: All except LPRICF.
	3.3.11	Effectivity of SYSTEM command	Meaningless and not effective to CF2000-0xA.
4	4.1 and 4.1.1	Configuration definition procedure	• C2000-xxA/C2000-xxB/C2000-xxC: Definition by creator program of SCDS, then by frame. • CF2000-0xA: Definition by frame only.
	4.1.1	Machine type in SCDS generation	• C2000-xxA/C2000-xxB: 9672-5. • CF2000-0xA: Not applicable. • C2000-xxC: 9672-6.
	4.1.2	LPAR CPU mode by default	• C2000-xxA/C2000-xxB/C2000-xxC: ESA. • CF2000-0xA: HCF.
		ADMF, Time Machine, and Time Warp availabilities	• C2000-xxA/C2000-xxB/C2000-xxC: Available. • CF2000-0xA: Not available.
		Alternate Processor availability	• C2000-xxA/C2000-xxB/C2000-xxC: Initially NO. • CF2000-0xA: Always YES.
		Availability of LPRICF frame	Available only to C2000-xxA, and C2000-xxB.
		(Intentionally left blank)	(Intentionally left blank)
	4.2	Frames for basic configuration definition	Frame images are differentiated by applicable processor models.
		LPAR name display on LPRDEF	• C2000-xxA/C2000-xxB, C2000-xxC: Specified by creator program of SCDS. • CF2000-0xA: Predefined by default or redefined on HCFCNF frame.
		MS/ES unit size	See Table 1-1.
	4.3.1	Frames for LPAR resource definition	Frame images are differentiated by applicable processor models.
	4.3.1, 4.3.2	MS/ES unit size	See Table 1-1.

© COMPAREX Informationssysteme GmbH

Chapter	Section or Subsection	Deviation by Processor Models (Sheet 3 of 3)	
		Subject	**Description**
4 (cont.)	4.4	Frames for LPAR control definition	Frame images are differentiated by applicable processor models.
		ADMF, Time Machine, and Time Warp availabilities	• C2000-xxA/C2000-xxB/C2000-xxC: Available. • CF2000: Not available.
	4.5.1	Frames for IP definition	Frame images are differentiated by applicable processor models.
	4.6	Frame for channel definition	Frame images are differentiated by applicable processor models.
	4.7	Availability of ICF and LPRICF frame	Available only to C2000-xxA, and C2000-xxB.
	4.12	(Intentionally left blank)	(Intentionally left blank)
	4.13	Frames subject to saving of definition information	• C2000-xxA/C2000-xxB: All. • CF2000-0xA: All except LPRICF. The above deviation applies to the main text as well as Figure 4-22 and Figure 4-23.

© COMPAREX Informationssysteme GmbH

1.4.2 Deviations in MLPF Operating Procedures

Table 1-3 provides the deviations by processor models in MLPF operating procedures.

Table 1-3 Deviations by Processor Models in MLPF Operating Procedures

Chapter	Section or Subsection	Deviation by Processor Models (Sheet 1 of 3)	
		Subject	**Description**
5	5.2.2	2-IOCDS mode	Not applicable to C2000-xxA or C2000-xxC.
		Availability of frames	LPRICF is available only on C2000-xxA, and C2000-xxB. LPRTIP, SLPAC, SLPAD, SLPDEV, SLPOP, and SLPSY are not available on CF2000-0xA.
	5.2.3	Basic frames in LPAR mode	ADRCMP, ALTDSP, CNSCNF, MODSEL, OCFOAT, ONPCTL, OPRMSG, SYSCTL, and SYSREC are not available on CF2000-0xA. HCFCNF is available only on CF2000-0xA.
	5.3	Availability of LPAR control commands	CG is not available on C2000-xxA or C2000-xxC. SETIC, SYSTEM ETAF, SYSTEM INTERRUPT, SYSTEM IPL, SYSTEM ISTEP, SYSTEM RESET, SYSTEM RESTART, SYSTEM START, SYSTEM STOP, and SYSTEM STORESTATUS are meaningless and not effective to CF2000-0xA.
	5.4	LPRCTL frame definition fields	AD, TM and TW are not available on CF2000-0xA.
		LPRICF frame	Available only on C2000-xxA, and C2000-xxB.
		LPRIDO frame commands	LO, LS, LA, and LC are displayed but not effective on CF2000-0xA.
		LPRIDD frame commands	S is displayed but not effective on CF2000-0xA. F is available only on C2000-xxA and C2000-xxB. N is not available on CF2000-0xA.
		LPRTIP frame	Not available on CF2000.
		(Intentionally left blank)	(Intentionally left blank)
		SLPAC frame	Not available on CF2000.
		SLPAD frame	Not available on CF2000.
		SLPDEF frame definition fields	AD, TM and TW (all under T command) are not available on CF2000.
		SLPDEV frame	Not available on CF2000.
		SLPOP frame	Not available on CF2000.
		SLPSY frame	Not available on CF2000.
		Availability of LPAR control commands	Same deviations as in section 5.3.
6	6.1	1-IOCDS and 2-IOCDS modes	Not applicable to C2000-xxA or C2000-xxC.
		Initial setup	• C2000-xxA/C2000-xxB/C2000-xxC: Needs selection of CPU mode and active SCDS. • CF2000-0xA: Does not need the above.
		Application of MODSEL frame	• C2000-xxA/C2000-xxB/C2000-xxC: Frame images are differentiated by applicable processor models. • CF2000-0xA: Not available.
	6.2	ICF and LPRICF frame	Available only to M2000, C2000-xx6/C2000-xxA, and C2000-xxB.
	6.3.2	Manual activation on SLPOP frame	Not available on CF2000.

© COMPAREX Informationssysteme GmbH

Chapter	Section or Subsection	Deviation by Processor Models (Sheet 2 of 3)	
		Subject	**Description**
6 (cont.)	6.4.1	System operation using LPAR frames	Explanations on SLPAC, SLPAD, SLPOP and SLPSY frames as well as their Basic mode comparables are not applicable to CF2000.
	6.4.2	System operation using LPAR control commands	None of the examples applies to CF2000.
	6.6	ADMF, Time Machine, and Time Warp availabilities	• Not available on CF2000.
		LPRICF frame	Available only to C2000-xxA and C2000-xxB.
	6.6.1	MS/ES unit size and application of Real MS Capacity Expansion	See Table 1-1.
	6.9	PSW or IP status display in indicator area	Not available on CF2000-0xA Models.
	6.10	Availability of Time Machine facilities	• C2000-xxA/C2000-xxB/C2000-xxC: All. • CF2000-0xA: LPAR Local TOD facility only.
	6.11	Note on Time Accelerator usage	Not applicable to CF2000-0xA.
7	All through chapter 7	Reference to and expression of 1- or 2-IOCDS mode	Not applicable to C2000-xxA or C2000-xxC.
	7.1 thru 7.3	LPRCA, LPRCH, and LPRCTL frames	Frame images are differentiated by applicable processor models. Also see Tables 7-2 thru 7.6.
	7.4	LPRDEF frame	Frame images are differentiated by applicable processor models. Also see Table 7-7.
		MS/ES unit size	See Table 1-1.
	7.5	LPRICF frame	Applicable only to C2000-xxA and C2000-xxB.
	7.6 thru 7.8	LPRIDX, LPRIDO, LPRIDD, LPRIPA, and LPRIPN frames	Frame images are differentiated by applicable processor models. Also see Tables 7-12 thru 7-18.
	7.9	LPRLOG frame (possible reference to LPAR Group)	• C2000-xxA/C2000-xxC: Group 0.
	7.11	LPROPT frame (target commands for Confirmation)	SLPOP frame commands, SLPSY frame commands, and LPAR control commands of SYSTEM IPL, SYSTEM RESET, SYSTEM RESTART, and SYSTEM STOP are not available on CF2000-0xA.
	7.14	LPRRSC frame	Frame images are differentiated by applicable processor models. Also see Tables 7-31 and 7-32.
		MS/ES unit size	See Table 1-1.
	7.15	LPRSSR frame (possible reference to LPAR Group)	• C2000-xxA/C2000-xxC: Group 0.
	7.16 and 7.17	LPRSTR and LPRSUM frames	Frame images are differentiated by applicable processor models. Also see Tables 7-35 and 7-37.
	7.18	LPRTIP frame	Frame images are differentiated by applicable processor models. Not available to CF2000-0xA.
	7.19	LPRTOD frame	Frame images are differentiated by applicable processor models.
	7.20	(Intentionally left blank)	(Intentionally left blank)

© COMPAREX Informationssysteme GmbH

Chapter	Section or Subsection	Deviation by Processor Models (Sheet 3 of 3)	
		Subject	**Description**
7 (cont.)	7.21 and 7.22	SLPAC and SLPAD frames	Frame images are differentiated by applicable processor models. Also seeTable 7-48. Not available to CF2000-0xA.
	7.23	SLPDEF frame	Frame images are differentiated by applicable processor models. Also see Table 7-50.
		MS/ES unit size	See Table 1-1.
	7.24	SLPDEV frame	Not available to CF2000-0xA.
	7.26	SLPOP frame	Frame images are differentiated by applicable processor models. Not available to CF2000-0xA.
	7.28	SLPSTS frame	Frame images are differentiated by applicable processor models. Also see Table 7-60.
	7.29	SLPSY frame	Frame images are differentiated by applicable processor models. Not available to CF2000-0xA.
	7.30	(Intentionally left blank)	(Intentionally left blank)
8	All through chapter 8	References to 1- or 2-IOCDS mode, and operands for 2-IOCDS mode only	Not applicable to C2000-xxA or C2000-xxC.
	8.3	Availability of frames	LPRICF is available only to C2000-xxA, and C2000-xxB. LPRTIP, SLPAC, SLPAD, SLPDEV, SLPOP, and SLPSY are not available to CF2000-0xA.
	8.4	CG command	Not available to C2000-xxA or C2000-xxC.
	8.10	MS unit size for MVSTOR command	See Table 1-1.
	8.12	(Intentionally left blank)	(Intentionally left blank)
	8.14	Applicable frames for functional equivalents of SAVE command	LPRICF is available only to C2000-xxA and C2000-xxB. LPRTIP is not available to CF2000-0xA.
	8.16	SETIC command	Meaningless and not effective to CF2000-0xA.
	8.18	SYSTEM ETAF command	Not applicable to CF2000-0xA.
	8.20	SYSTEM INTERRUPT command	Meaningless and not effective to CF2000-0xA.
	8.22 and 8.23	SYSTEM IPL and SYSTEM ISTEP commands	Meaningless and not effective to CF2000-0xA.
	8.28 thru 8.32	SYSTEM RESET thru SYSTEM STORESTATUS commands	Meaningless and not effective to CF2000-0xA.
9	9.2	Routine code D	Not applicable to C2000-xxA or C2000-xxC.
		Abend Code 044	Not applicable to CF2000-0xA.
		Abend Code 310 Reason Code 02	Not applicable to C2000-xxA or C2000-xxC.

© COMPAREX Informationssysteme GmbH

1.4.3 Deviations in MLPF Messages

Table 1-4 provides the deviations by processor models in MLPF messages.

Table 1-4 Deviations by Processor Models in MLPF Messages

Chapter	Section or Subsection	Deviation by Processor Models	
		Subject	**Description**
10	10.1.3	Expression "[x]" and its explanation	Not applicable to C2000-xxA or C2000-xxC.
	10.2	References to 2-IOCDS mode	Not applicable to C2000-xxA or C2000-xxC.
		Messages with OS-related references	Not applicable to CF2000-0xA.
		Messages on Time Machine facilities except LPAR Local TOD (LPRL331W, LPRL332E, LPRL333W, LPRL334W, LPRR520E, LPRR522U, LPRR523W, LPRR524E, LPRR525S, LPRF751E, LPRM908U, LPRM909I)	Not applicable to CF2000-0xA.
		Messages on ETAF (LPRR115U, LPRL391E)	Not applicable to CF2000-0xA.
		Message on ADMF (LPRL209E)	Not applicable to CF2000-0xA.
		Messages related to ICF (LPRM164I, LPRL320E, LPRL347E, LPRL348E, LPRL349E, LPRL355E, LPRL356E, LPRL357E, LPRL358E, LPRL361E, LPRL363E, LPRR528E)	Applicable only to C2000-xxA and C2000-xxB.
		Message on IntCF (LPRM163I)	Applicable only to C2000-xx6 and C2000-xxA.
		Messages on Dummy mode (LPRL336E, LPRF785S)	Not applicable to CF2000-0xA.
		Message on VSF (LPRF694E)	Not applicable to CF2000-0xA.

1.4.4 (Intentionally Left Blank)

Table 1-5 (Intentionally Left Blank)

© COMPAREX Informationssysteme GmbH

2 INTRODUCTION TO MLPF USER'S GUIDE

2.1 What Is MLPF?

The Multiple Logical Processor Feature (MLPF) is a hardware feature which allows a processor complex to be partitioned into multiple logical processors. In the applicable processor groups, the MLPF is provided as a standard feature.

With the MLPF installed, a processor complex can be partitioned into the following number of logical partitions on each C2000-xxA and C2000-xxC: up to 15.

The partitioned mode provided by this feature is called Logically Partitioned mode (LPAR mode). In LPAR mode, a processor complex is divided into Logical Partitions (LPARs), each of which is a logical processor complex with its hardware resources exclusively assigned or time-shared with other LPARs. This is called the "Logical Partitioning" of the processor complex. On the other hand, the operating mode of a conventional physical processor complex is called Basic mode.

Note: *On each CF2000-0xA Model, Basic mode is not available. On each C2000-xxA, C2000-xxB Model, and C2000-xxCI, Basic mode is available.*

Like a physical processor complex, each LPAR has the following of its own: architecture mode, main storage, expanded storage, and channel paths.

Each LPAR operates independently of, and time-shared with, other LPARs. The operating mode of each CF2000-0xA Model is set to LPAR mode by default. The operating mode of each C2000-xxA Model,C2000-xxB Model, and C2000-xxC Model is set to LPAR mode as follows:

1. Specify "LPAR Mode" (or, in 2-IOCDS mode, "LPAR/EX Mode") on the MODSEL frame as an option for SYSIML clear.
2. Execute SYSIML clear.
3. Define hardware resources for each LPAR.
4. Activate each LPAR.
5. Specify an IPL device and a load parameter for each LPAR.
6. Execute IPL of each LPAR's operating system.

Definition of terms

In this manual, terms "physical" and "logical" are defined as follows unless otherwise mentioned:

- Physical: This term represents an actually existing resource of a processor complex. The term may be omitted when it is explicit in the context.
- Logical: This term represents a virtual, logical resource viewed from an LPAR or from software on an LPAR. Therefore, the term may correspond to an actually existing resource or may refer to a hypothetical concept.

MLPF and Virtual Machine

There has been Virtual Machine (VM), a conventional function for logically (virtually) partitioning a computer system. Major characteristic differences between the MLPF and the virtual machine are given below.

- To realize virtual processors, the VM uses software simulation whereas the MLPF uses hardware.
- While the VM can realize, through software simulation, resources actually non-existing as hardware, the MLPF can only partition resources existing as hardware.

© COMPAREX Informationssysteme GmbH

2.2 Logical Partitioning

In LPAR mode, resources are logically partitioned as mentioned below.

- Guest OS and architecture mode: A guest OS in applicable architecture mode as shown in Table 2-1 is independently assigned to each LPAR.
- Instruction Processor (IP): One or multiple IPs can be dedicated to a single LPAR or shared between multiple LPARs.
- Main storage (MS): A contiguous main storage area is partitioned into as many blocks as the number of LPARs, and each block is dedicated to a single LPAR individually. In Real MS Capacity Expansion mode, an MS size must be specified on model-dependent unit size boundary in real addresses. Otherwise, an MS size can be specified on 1-M-byte boundary in real addresses.
- Expanded storage (ES): A contiguous area of ES is partitioned into as many blocks as the number of LPARs, and each block is dedicated to a single LPAR individually. In Real MS Capacity Expansion mode, an ES size must be specified on model-dependent unit size boundary in real addresses. Otherwise, an ES size can be specified on 1-M-byte boundary in real addresses.
- Channels: On the C2000-xxA Models, the C2000-xxB Models, and the C2000-xxC Models, each channel path can be shared by multiple LPARs-channel paths can be dynamically reconfigured among LPARs by using LPAR commands or MVS/ESA system commands. On the CF2000-0xA Models, each channel path is dedicated to a single LPAR at a time.
- I/O device: On the C2000-xxA Models, the C2000-xxB Models, and the C2000-xxC Models, an I/O device is dedicated to an LPAR to which a corresponding channel path is assigned. When an I/O device has multiple paths to channels which are each assigned to a different LPAR, it appears as if the device is shared between different systems. On the CF2000-0xA Models, no I/O device is assigned to an LPAR.

In addition, hardware resources indispensable for the operation of a processor complex such as clocks, registers and I/O processors are dedicated to a single LPAR or shared between multiple LPARs. The CPU ID of logical instruction processors can be uniquely assigned to each LPAR apart from actual values for physical resources.

Figure 2-1 shows an example of hardware resource configurations in Basic mode and LPAR mode with four LPARs.

Table 2-1 Applicable Operating Modes in LPAR Mode

Processor Model		**Architecture Mode**		
		ESA/390	**HCF**	**Dummy***
C2000	C2000-xxA or C2000-xxB	√	√	√
		√	√	√
	CF2000-0xA	—	√	—
	C2000-xxC	√	√	√

√: supported,
–: not supported
*: See section 2.3.19.

© COMPAREX Informationssysteme GmbH

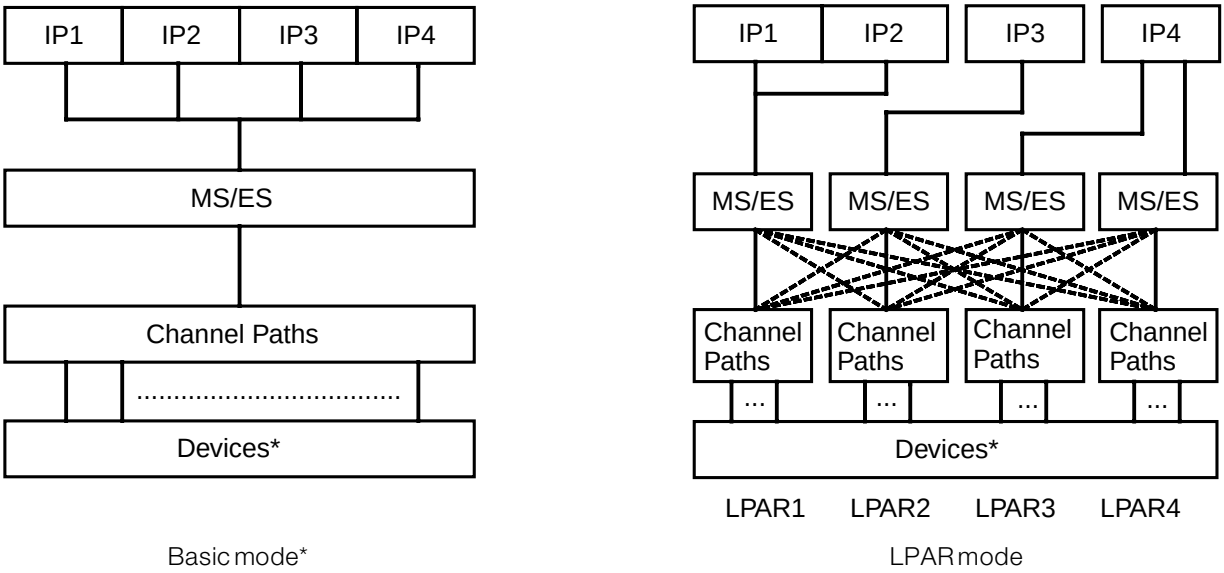

*Not applicable to CF2000-0xA Models.

Figure 2-1 Configurations in Basic Mode and LPAR Mode (with 4 LPARs)

Note: *Dotted lines in LPAR mode represent shared paths with EMIF which does not apply to CF2000-0xA Models.*

© COMPAREX Informationssysteme GmbH

2.3 Features of LPAR Mode

2.3.1 Prerequisite

An SCDS (System Configuration Data Set)—equivalent to an IOCDS for comparable IBM processors—for LPAR mode is required to operate the applicable processor group in LPAR mode. Such SCDS for LPAR mode for the C2000-xxA Model, the C2000-xxB, or the C2000-xxC is created by running Input/Output Configuration Program (IOCP; IBM's program product) in version 3 level 1 or later version, or Hardware Configuration Definition (HCD; IBM's program product) in a similar manner as in Basic mode. SCDSs for the CF2000-0xA Models are preinstalled in the machine and cannot be altered except LPAR name definition.

2.3.2 Supported Operating Systems

The CF2000-0xA Models do not support any operating system. On the other hand, the C2000-xxA Models, the C2000-xxB Models, and the C2000-xxC Models support the following operating systems:

- OS/390
- MVS/ESA (MVS/SP Version 3, 4, or 5)
- MVS/XA (MVS/SP Version 2)
- VM/ESA without 370 features
- VM/XA

2.3.3 Functional Deviations from Basic Mode

Each C2000-xxA Model, the C2000-xxB Model, and the C2000-xxC Model in LPAR mode has the following functional deviations from Basic mode:

- Program event recording function: If one LPAR is specified for compare stop or instruction step mode under rate control, the program event recording (PER) function for that LPAR will not work completely. (Even if a PER event is recognized, a PER interruption may or may not take place.)
- Reconfiguration command under MVS: An offline or online command for physical instruction processors cannot be executed.
- Preferred Storage mode: Under VM/ESA, the SIE Assist function for a guest VM in Preferred Storage mode (so-called V=R mode) does not operate.

2.3.4 LPAR Configuration

Depending on the physical processor configuration, the following numbers of LPARs are available on each C2000-xxA Model and C2000-xxC: up to 15 on single SCDS.

Table 2-2 shows logical hardware configuration in each LPAR operating mode.

Table 2-2 Logical Hardware Configuration for LPARs

Hardware Resource	Applicable Mode	Logical Configuration
Instruction Processor (IP)	ESA/390, HCF, Dummy	Up to the number of physically installed IPs. (Each logical CPU address must be specified to be the same as the physical CPU address.)
Main storage (MS)	ESA/390, HCF	Up to a physically installed size minus the size of Hypervisor (LPAR-controlling macrocode) area. (The MS address starts from 0.) In Real MS Capacity Expansion mode, an MS size must be specified on model-dependent unit size boundary; otherwise, on 1-M-byte boundary.
Expanded storage (ES)	ESA/390, HCF	Up to a physically installed size. In Real MS Capacity Expansion mode, an ES size must be specified on model-dependent unit size boundary; otherwise, on 1-M-byte boundary.
Channel or channel path	ESA/390, HCF	Up to the number of physically installed channel paths (logical channel path ID = physical channel path ID). Channel type limited on LPAR in HCF mode.

© COMPAREX Informationssysteme GmbH

2.3.5 CPU ID

In LPAR mode, each logical IP has its own logical CPU ID. Table 2-3 shows the CPU ID formats in Basic mode and in LPAR mode.

The CPU ID contents in LPAR mode shown below are a default automatically set at SYSIML clear. To keep program compatibility with Basic mode, the first, second and fourth thru eighth digits (underlined in Table 2-3) of a logical CPU ID can be changed through LPAR frame operations when the LPAR is deactivated. However, the same CPU ID contents cannot be specified for multiple LPARs.

The serial number for a physical IP can be changed by maintenance personnel using the SVP functions. In such a case, in order to reflect thus specified serial number value in the CPU ID of a logical IP, SYSIML clear and redefining on the relevant LPAR frame (specifically, LPRDEF) are required.

Table 2-3 CPU ID Formats

Mode	CPU ID Format
Basic	Byte 0 1 2 3 4–5 6 7 V V | IS | SS | SS | nnnn | 00 | 00 • V V: version code • I: CPU address • SSSSS: serial number • nnnn: 9672 for C2000
LPAR	Byte 0 1 2 3 4–5 6 7 V V | LP | SS | SS | nnnn | 00 | 00 • V V: version code (same as that of physical CPU) • L: logical CPU address • P: LPAR number (must be unique to one another within the system)* • SSSS: serial number (same as low-order 4 digits of physical CPU) • nnnn: 9672 for C2000

* In LPAR/EX mode, the same set of LPAR numbers are initially assigned to the LPARs of both LPAR groups. In order to utilize such LPARs having the same LPAR number, the LPAR number of either LPAR must be altered so that it is uniquely numbered across the LPAR groups.

2.3.6 TOD

Since a physical processor complex has only one TOD (time-of-day) clock, the TOD clock is shared among LPARs when a processor complex operates in LPAR mode. Each LPAR recognizes a TOD clock as a logical one, not a physically existing one. Such logical TOD clock is set when a corresponding LPAR is activated. Even if the TOD value of an LPAR is changed by the SET CLOCK (SCK) instruction, a logical TOD value of another LPAR is not affected. The TOD Clock key function (a pull-down menu item or a short-cut key combination) on the operator console is disabled and always placed in the NOT SECURED state; hence, the SCK instruction is always acceptable. A physical TOD value can be changed by specifying a value on the TODSET frame (an SVP function) and executing SYSIML clear.

2.3.7 Display of PSW

When a processor complex operates in LPAR mode, the display of PSW in Basic mode given in the system indicator area on the display console becomes unavailable. The PSW display appears when the physical IP enters a manual state or an interruption-inhibited wait state. (The PSW display does not appear when a logical IP enters a manual state or a logical interruption-inhibited wait state.)

2.3.8 Display of System Activities

When a processor complex operates in LPAR mode, system activities on each LPAR are displayed as the guest CPU usage ratio (%) and the host CPU (=MLPF) usage ratio (%).

© COMPAREX Informationssysteme GmbH

2.3.9 Console Integration

When a processor complex operates in LPAR mode, the Console Integration feature allowing an LPAR-mode console to temporarily substitute the MVS operator console(s) is supported. This feature is implemented by the two LPAR frames shown below.

- SLPMSG (LPAR Operator Message) frame: Provided on each LPAR, this frame acts as a substitute of the MVS operator console for each LPAR.
- LPRSUM (LPAR Message Summary) frame: Provided as a common frame for all LPARs, this frame displays a summary list of messages received by all LPARs.

2.3.10 Inter-System Coupling Channel

When the C2000-xxA Model, the C2000-xxB Model or the C2000-xxC operates in LPAR mode, the channel type of Coupling Facility Sender (CFS) and Coupling Facility Receiver (CFR) are supported by the Inter-System Coupling Channel (ISCH) and are defined by an SCDS created with IZPIOCP version 1.3 or above. On the CF2000-0xA Models, only the CFR channel type is supported by the ISCH and is defined by the pre-installed SCDS.

Note: *A recoverable interface control check (ICC) due to an ISCH interface timeout may be detected at a CFR-channel-connected ISCH by one of the following commands and operations: ACTIVATE command, DEACTIVATE command, MVSTOR command, SYSTEM CHP command, SYSTEM IP command, LPAR local TOD setting on LPRTOD frame, channel online/offline operation on LPRCH frame, TOD synchronous check operation (not applicable to CF2000-0xA Models), dynamic LPAR reconfiguration operation (not applicable to CF2000-0xA Models), dynamic reconfiguration of logical IP by HCCF operator command, dynamic reconfiguration of MS by HCCF operator command, and dynamic reconfiguration of ES by HCCF operator command.*

2.3.11 Highspeed Coupling Control Feature

When a processor complex operates in LPAR mode, the Highspeed Coupling Control Feature (HCCF) is supported as standard to create the single-system coupling environment called Integrated Coupling Migration Facility (ICMF) and the multisystem coupling environment in connection with the above-mentioned ISCH. In order to utilize the HCCF, one or more LPARs in ESA mode need to be defined as "HCCF-LPARs" which load and execute the control code of the HCCF called Highspeed Coupling Control Feature Assist (HCCFA). By executing the said HCCFA, each HCCF-LPAR causes one or more of the remaining LPARs under operating systems (OS-LPARs) in ESA mode to participate in the coupling environment.

The maximum number of HCCF-LPARs assigned for ICMF is limited to two. Not limited is the number of HCCF-LPARs assigned for multisystem coupling, nor is the number of OS-LPARs, as long as the total number of LPARs activated at a time remains within the maximum limits defined in section 2.3.4.

For details of HCCF, HCCFA, ICMF (single-system coupling) and multisystem coupling, see HCCFA User Manual for applicable HCCFA release level.

2.3.12 Real MS Capacity Expansion

When a processor complex operates in LPAR mode and in Real MS Expansion mode, the processor complex on the whole can utilize in Real MS Capacity Expansion mode of real main storage (MS) within the physical processor capacity, and the remainder as expanded storage (ES). If so installed, each LPAR can independently (and in a time-shared manner) utilize up to 2 GB of real MS capacity and up to 16 GB of ES capacity, both in increments of model-dependent unit size. In such expanded configuration (Real MS Capacity Expansion mode), allocation and dynamic reconfiguration of physically non-contiguous main storage or expanded storage is automatically enabled by addressing with the Floating Address Register (FAR). Note that the setting of Real MS Capacity Expansion mode is not released to the end user and must be installed by the customer engineer or the field engineer.

© COMPAREX Informationssysteme GmbH

2.3.13 2-IOCDS Mode (LPAR/EX Mode)

Available on the certain Processor Group is 2-IOCDS mode (or "LPAR/EX mode" named for the CPU mode) highlighted in utilizing two groups of SCDS (IOCDS equivalent) called Group 0 and Group 1. This mode increases the number of channels from 256 to 512.

Except where specifically indicated, references to LPAR mode also apply to LPAR/EX mode throughout this document.

2.3.14 Time Machine

Time Machine solves the year 2000 problem anticipated on any user program using two-digit years. To meet this purpose Time Machine provides three hardware facilities: LPAR Local TOD Facility, Time Machine Facility, and Time Warp Facility. All of them are operable only under the control of Multiple Logical Processor Feature (MLPF), i.e., in LPAR mode.

All facilities of Time Machine are defined as standard for the C2000-xxA Models, C2000-xxB Models, and the C2000-xxC Models, whereas the CF2000-0xA Models only support LPAR Local TOD Facility as standard. Time Machine Facility or Time Warp Facility is not available to the CF2000-0xA Models, since they do not operate under any IBM operating system. Functional characteristics of individual facilities are shown below.

LPAR Local TOD Facility

Provides for setting individual time of day (TOD) clock for each LPAR. This facility is useful for an advanced functional test of the whole system including an operating system under the simulated year 2000 environment.

Time Machine Facility

Provides for tracing specific events-actually specific instructions with specific conditions-while executing any user program **without modifying it**. Resulting trace records show program names, job names, and other information useful in modifying user programs. This facility enables tracing of a specific LPAR frame under user-defined conditions. The trace records can be edited and printed by a separate program product called Time Machine Utility.

In general, Time Machine Facility is used to pin-point the programming fault which will cause a failure in the year 2000. For example, this facility checks out the cases of negative subtraction results arising from the use of two-digit years.

Time Warp Facility

Provides a special instruction set called Warp Instruction Set. Basically, Warp Instruction Set is user-programmable to meet the user's needs. Upon encountering an instruction having the operation code "00" (means "permanently invalid"), Time Warp Facility treats the instruction as a Warp instruction.

In general, Time Warp Facility is used to solve the year 2000 problem easily and temporarily with a small modification to the program object code, known as patch. Therefore, this facility allows the users to keep using their old programs even after the year 2000. For example, cases of negative subtraction results arising from the use of two-digit years can be circumvented with the Warp instruction "SUBTRACT AND ADD 100" instead of the original SUBTRACT instruction.

2.3.15 Time Accelerator

Time Accelerator accelerates counting-up of the TOD and the CPU timer for a specific LPAR.

Note: *Time Accelerator only simulates the STCK, SCKC, STCKC, SPT and STPT instructions to have their timings accelerated, and does not apply to such timings related to I/O or ETR (External Timer Reference: operating mode with the ETAF installed). Hence, Time Accelerator may cause an abend or a failure if any user program utilizes timings stored in subchannels or RMF. In such a case, examine the ETR by the DISPLAY command of MVS, calculate the timing through a forced program loop, and exit the loop by the Missing Interrupt Handler of MVS or by any other means. (In the ETR mode, TODs and CPU timers for LPARs do not synchronize with the ETR.)*

© COMPAREX Informationssysteme GmbH

2.3.16 Dynamic CF Dispatching

Dynamic CF Dispatching allows HCCFA in release 3.0 or above to release IP resources when it has no workload, thereby minimizing overheads of HCCFA and MLPF.

Conventionally, HCCFA continuously monitors for arrival of any request from an ISCH by means of polling loop. With Dynamic CF Dispatching, HCCFA loads a wait PSW with the factory-tuned interval timer setting to be activated when the ratio of request from an ISCH goes under a certain limit. Then, HCCFA monitors for arrival of any request from an ISCH only on intervals; HCCFA lowers the next interval with presence of the request whereas HCCFA raises such interval timer setting with absence of the request. When the request ratio exceeds the limit, HCCFA switches control to the polling loop and resumes continuous monitoring until the request ratio goes under the limit again.

In the event of a PSW-initiated wait, MLPF intercepts the wait and either dispatches control to other LPARs by ordinary dispatching algorithm or waits for an I/O or external interruption including HCCFA's interval timer interruption.

While Dynamic CF Dispatching is enabled, MLPF ordinarily dispatches control to HCCFA at varying intervals of approximately up to 100 msec. In case a very small service ratio (although not recommended) is defined for an HCCF-LPAR, MLPF forces its scheduler to dispatch control to HCCFA at fixed intervals of approximately 100 msec regardless of usual dispatching algorithm with service ratio. This avoids an ICC detection by an ISCH interface timeout.

2.3.17 Integrated Coupling Facility

Integrated Coupling Facility (IntCF), available on the C2000-xxA and the C2000-xxB, causes an Alternate Processor (AP) to be usable as an additional IP resource devoted to an HCCF-LPAR. In MLPF 3.5.1, an IntCF IP is assigned to a logical IP either in dedicated mode or in shared mode on the target HCCF-LPAR. Onlining of the target AP with the SYSTEM IP command, mandatory in MLPF 3.3.3 or below, is no longer prerequisite in MLPF 3.5.0 or above.

With IntCF, each AP can be either assigned as an IntCF IP or left as a Standby AP at the user's choice. Attention should be drawn to the fact that when all the APs are used for IntCF, the system is left with no Standby AP, which might potentially impact the system's availability. When multiple APs are available in the system, it is recommended that the assignment of AP as IntCF IP start from the one having the smallest AP number, and that the AP having the greatest AP number be left as a Standby AP.

2.3.18 MLPF Policy

MLPF Policy provides auto-scheduled or on-demand programmable operation to manage, control, or reconfigure LPARs without operator interventions. To achieve these, MLPF Policy provides the following vehicles in addition to the text-based operation interface (PMC command):

- LPRPOL frame to manage and control scripting or profiling the commands.
- Special diagnose instruction (Policy Diagnose) to provide interface to the program.

2.3.19 Dummy Mode

For flexible control of hardware resources, Dummy mode is introduced as an additional choice of LPAR operating mode with MLPF 3.5.0 or above. An LPAR in Dummy mode can only share the IP resource with other LPARs based on the IP resource usage ratio of the LPARs. An LPAR in Dummy mode cannot utilize any other resource (MS/ES or channels). Dummy mode is not available on the CF2000-0xA Models.

2.3.20 Physical IP Group Scheduling Facility

Physical IP Group Scheduling Facility (PIPGSF) enables virtual and custom grouping of physical IPs, and controls how they are scheduled to LPARs as logical IPs.

With the PIPGSF turned off, MLPF schedules physical IPs to LPARs automatically and dynamically at the LPAR activation. With the PIPGSF turned on, MLPF schedules physical IPs only to those LPARs in the same physical IP group or those LPARs not belonging to any physical IP group.

© COMPAREX Informationssysteme GmbH

2.3.21 Virtual Server Facility Phase-1

Virtual Server Facility (VSF) Phase-1 provides the user with virtually fenced, fixed groups of physical IPs called "Virtual Servers" under MLPF 3.5.1 on the C2000-xxA Models, the C2000-xxB Models, and the C2000-xxC Models. Each virtual server has a unique set of version code and serial number to be reasonably determined by the capacity of the server, thus contributing to possible reduction of the user's software cost. Changes to the physical IP grouping are only allowed to the OEM customer's authorized service representative.

2.3.22 Availability Improvement with Support of Process Succession

When one IP in a multi-IP configuration encounters a machine-check factor, Process Succession automatically backs up the data at the check point and causes the ongoing process to continue on another IP. Consequently, this feature reduces the probability of a Hypervisor abend, an OS abend, or a job abend due to an IP machine check.

2.3.23 Architectural Deviations in LPAR Mode

In LPAR mode, certain architectural characteristics deviate from the IBM publication *IBM Enterprise Systems Architecture/390 Principles of Operation* (SA22-7201) as shown below. These deviations apply to each LPAR in ESA/390 mode on the C2000-xxA Model, the C2000-xxB Model, and the C2000-xxC Model.

- START SUBCHANNEL (SSCH) instruction: If the SSCH instruction is issued with the ORB of address limit = "1," a program interruption due to operand exception occurs.
- STORE SUBCHANNEL (STSCH) instruction: The address limit mode (LM) of the SCHIB stored by the STSCH instruction is always "0" regardless of the value set by the MSCH instruction.
- SET ADDRESS LIMIT (SAL) instruction: Only a program exception check is performed (no instruction execution).
- Priority Interruption feature: The priority interruption by means of an interruption subclass does not operate.
- TOD: The TOD of each LPAR is always placed in the not-secured state.

© COMPAREX Informationssysteme GmbH

© COMPAREX Informationssysteme GmbH

3 MLPF POLICY DETAILS

3.1 MLPF Policy Overview

MLPF Policy provides auto-scheduled or on-demand programmable operation to manage, control, or reconfigure LPARs without operator interventions.

Figure 3-1 outlines the data structure and hierarchy of the MLPF Policy. Major data objects of the MLPF Policy are generally conceptual data items of profiles, scripts and commands. The data items are also hierarchical. Each profile, called a Policy Profile, designates any combination of scripts. Each script, called a Policy Script, consists of commands. Each command, a text-based command called a PMC command, is predefined as part of the MLPF Hypervisor facilities and specifies an operation or action instead of LPAR frames and LPAR control commands. All of these actually reside in the SVP hard disk as part of the processor configuration information.

Note: *Originally, the PMC command was developed to provide MLPF with a general interface to external single-point-of-control devices, especially Hitachi's Processor Management Console (PMC). For this reason the command has been called PMC command.*

The number of Policy Profiles is fixed to 16, numbered from 01 to 16, and the number of Policy Scripts is fixed to 32, numbered from 01 to 32. The number of PMC commands is variable and the maximum count within each Policy Script is 15.

To plan the MLPF Policy is to write and edit a set of Policy Profiles, Policy Scripts, and PMC commands. Each of these actions can be made easily by using the special vehicles of LPRPOL frame and Policy Diagnose instruction.

- LPRPOL frame: Introduced as one of LPAR frames, the LPRPOL frame acts as a special purpose screen editor usable only for the MLPF Policy. Specifically, the frame allows an operator to read, write, and directly modify the Policy Profiles, the Policy Scripts, and the PMC commands in the SVP hard disk.
- Policy Diagnose instruction: This is a special purpose instruction not listed under ESA/390 architecture but usable only for the MLPF Policy. Specifically, the instruction allows the program to write the Policy Profiles, Policy Scripts, and the PMC commands into the SVP hard disk instead of the LPRPOL frame. This instruction is not available on the CF2000-0xA Models.

Subsequent sections describe the Policy Diagnose instruction and the PMC commands. For the operation on the LPRPOL frame, see chapter 7.

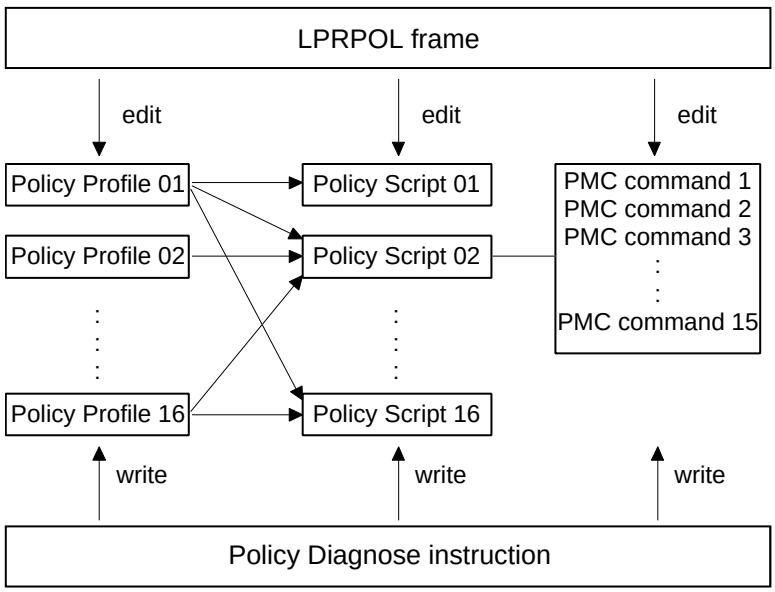

Figure 3-1 Data Structure and Hierarchy of MLPF Policy

© COMPAREX Informationssysteme GmbH

3.2 Policy Diagnose Instruction

3.2.1 Application and Instruction Format

The Policy Diagnose instruction is available only for an LPAR to which "PL" option is enabled on the LPRCTL frame. The Policy Diagnose instruction is not available on the CF2000-0xA Models.

Being a Diagnose instruction, it is initiated by the function code called Policy Function Code (PFC) as defined in Table 3-1. The control block in storage called Policy Control Block (PCB) may be used as necessary. The instruction format is shown below.

```
Diagnose   R1,R2,R3,D2 (B2)        [RS]
```

83	R1	R3	B2	D2

The first operand, the contents of R1, specifies the PFC. The second operand address, a summation of the B2 and D2 contents, must be (00000555)16, which is implicitly recognized as a token of the Policy Diagnose instruction by the MLPF Hypervisor. The third operand address, the contents of R3, is a virtual address designating the origin address of the PCB. The PCB must be on a page (4096 bytes) boundary.

The Policy Diagnose is a privileged instruction and actually does not have the mnemonic. Thus, the mnemonic "Diagnose" is temporarily used in accordance with the general assembler language specifications.

Table 3-1 Policy Function Codes

Code (Hex)	Name	Function
00000121	WRITE-COMMAND	Writes PMC commands into a Policy Script. This PFC uses a Type-1 PCB.
00000131	WRITE-SCHEDULE	Writes autoscheduling information ("DATE" and "TIME" on the LPRPOL frame) into a Policy Profile. This PFC uses a Type-2 PCB.
00000141	POLICY-ACT	Sets status of a Policy Profile ("PROFILE STATUS" on the LPRPOL frame) to "ACT." This PFC uses a Type-2 PCB.
00000142	POLICY-INACT	Sets status of a Policy Profile ("PROFILE STATUS" on the LPRPOL frame) to "INACT." This PFC uses a Type-2 PCB.
00000283	SENSE-POLICY	Senses completion status of the PMC command held in the Policy Manager. The result of sensing is reported as a condition code or a completion code. This PFC does not use a PCB.
Others	(Invalid)	Operation is immediately terminated with the condition code "1" and the completion code "00000004." No other action is performed.

© COMPAREX Informationssysteme GmbH

3.2.2 Condition Codes for Policy Diagnose Instruction

Upon completion of the Policy Diagnose instruction, one of the condition codes defined in Table 3-2 is reported to the MLPF Hypervisor depending on the execution result.

Table 3-2 Condition Codes for Policy Diagnose Instruction

Code	Meaning
0	Instruction execution has been successfully completed and the associated asynchronous operation has also been successfully initiated by the Policy Manager for PFCs other than SENSE-POLICY. After issuing this condition code 0, the Policy Manager will be in a busy state until the condition code 1 is returned by the Policy Diagnose instruction. For the SENSE-POLICY PFC, the condition code 0 means that the Policy Manager is in a free state and available to accept a request.
1	Both instruction execution and associated operation have been terminated, and the completion code of such operation has been stored into the first operand. This means that the operation has been immediately terminated, including error detection during instruction execution, for all of PFCs. (After the condition code 0 is returned for PFCs other than SENSE-POLICY, the condition code 1 is returned only for the SENSE-POLICY PFC. In this situation, PFCs other than SENSE-POLICY will cause the condition code 2 instead of 1.) In addition, the condition code 1 means that the Policy Manager recovers from a busy state to a free state to accept a next request. Note that the condition code 1 does not mean successful completion of operation by itself. The operator is advised to investigate the completion code stored in the first operand.
2	The Policy Manager is in a busy state for the previously initiated operation and has not accepted the request. If this condition code 2 is returned and the operator desires to initiate the new request, the operator should wait for the condition code 1 to be reported for the SENSE-POLICY PFC.
3	Currently this code is not used but it is recommended that this code be reserved for a permanent failure or not-operational state of the Policy Manager in future enhancement.

3.2.3 Completion Codes for Policy Diagnose Instruction

The Policy Diagnose instruction stores the completion code, a 2-byte hexadecimal code, into bit 16 through bit 31 of the first operand when the condition code 1 is returned. Bit 0 through bit 15 of the first operand is filled with zeros. The completion code is also stored into the PCB, if utilized, as POLCRTN in Type-1 PCB and POLSRTN in Type-2 PCB. Note that the completion code overrides the first operand, which is initially set as the PFC. Table 3-3 shows the completion codes.

Table 3-3 Completion Codes for Policy Diagnose Instruction

Code	Meaning (Sheet 1 of 2)
0000	The operation has been successfully completed.
0100	The operation has been partially completed. This code means that the Policy Manager found at least one Policy Script having an invalid autoscheduling date and time such as an already past one during activation of Policy Profile, or at least one nonexistent Policy Script contained in a Policy Profile.
0001	The operation may not have been completed because the execution has been forced to cancel by an operator action during its execution.
0004	The PFC is not a defined one and no operation has been performed.
0008	The format of the PCB is invalid and no operation has been performed.
0009	The Policy Manager is in a busy state and no operation has been performed.
000A	A PMC command in a Policy Script is invalid and no operation has been performed.
000B	The Policy Profile has already been placed in the desired status by the previous request issued by this LPAR (e.g., activate request to an activated LPAR). Hence, no operation has been performed.
010B	The Policy Profile has already been placed in the desired status by the previous request issued by another LPAR or the LPRPOL frame (e.g., activate request to an activated LPAR). Hence, no operation has been performed.
020B	The Policy Manager has found that all Policy Scripts have invalid auto-scheduling dates and times such as already past ones during activation of Policy Profile, or nonexistent Policy Scripts contained in Policy Profiles. Hence, no operation has been performed.
030B	The specified Policy Profile does not exist.

© COMPAREX Informationssysteme GmbH

Code	Meaning (Sheet 2 of 2)
040B	Updating of the specified Policy Profile has failed. It is in the active state.
000C	A failure in MLPF Hypervisor or hardware was detected during execution. The operation may or may not have been performed.
050B	Activation of the specified Policy Profile has failed. It is in the emergency class.

3.2.4 Program Exceptions

- Access exception: Fetch from or store to Policy Control Block (PCB)
- Privileged operation exception
- Specification exception: Not in LPAR mode, no "PL" option on LPRCTL frame, or PCB not on page boundary

3.2.5 Programming Notes

- All data items stored by the Policy Diagnose instruction are automatically saved into the SVP hard disk regardless of the Save option setting of the MLPF.
- If the operator wishes to save the resulting LPAR configuration information, a Policy Script needs to end with the PMC command SAVE. The Policy Manager does not have the autosave capability.
- The operator can force to cancel execution of the Policy Profile specified by the Policy Diagnose instruction on the LPRPOL frame as explained in chapter 7. In such a case, however, the Policy Manager cannot recognize the status of completion of the Policy Script and returns the completion code "0001." Hence, if deemed necessary, the operator should retry the Policy Diagnose instruction.
- The Policy Manager may encounter a busy condition of any other component in the MLPF Hypervisor. This occurs during operation on the LPRPOL frame and also may occur during any other operation that requires common resources for MLPF. In this case, the Policy Manager does nothing but returns the completion code "0009." Hence, the operator should retry the Policy Diagnose instruction.
- The MLPF Hypervisor does not manage synchronization of processings and resources, whereas conflicts may happen among the Policy Diagnose instructions or between the LPRPOL frame and the Policy Diagnose instruction. Consequently, the resulting order of operations is unpredictable if they are executed simultaneously. For this reason it is strongly recommended that, if the operator wishes to edit PMC commands, Policy Scripts, or Policy Profiles frequently, the operator should allow either only one LPAR or the LPRPOL frame for the edit. In addition, the operator should pay a special attention in using multiple Policy Diagnose instructions for activation and deactivation of the Policy Profile.
- Since the date and time value used for auto-scheduled execution is based on the one shown on LPAR frames (LPAR frame time), the operator should pay attention to the date and time value generated by the program (program time). Although these two values derive from the same processor time, they may be different. The following shows their relations.
- LPAR frame time = (processor time) + (SVP local time offset).
- processor time = (Sysplex Timer standard time), if so connected, or
  = (SVP standard time).
- program time = (processor time) + (LPAR local time offset) + (OS time offset), if SVC macro is used such as TIME macro, or
  = (Processor time) + (LPAR local time offset), if STCK instruction is used directly.

3.2.6 Policy Control Block (PCB)

Depending on the PFC, the PCB has either Type-1 or Type-2 format. The PCB must be on a page boundary; otherwise, a specification exception program check occurs.

Type-1 PCB

Type-1 PCB is used by the PFC of WRITE-COMMAND. The length of a Type-1 PCB is variable up to 4096 bytes. Table 3-4 shows the Type-1 PCB format. Explanation on each entry follows.

© COMPAREX Informationssysteme GmbH

Table 3-4 Type-1 PCB Format

	0	1	2	3	4	5	6	7
0	Reserved				POLCSCNO	Reserved		
8	POLCSCNA							
16	POLCMCNT	Reserved			POLCEMAP		POLCRTN	
24	POLCMD1							
96	POLCMD2							
168 :	:							
1032	POLCMD15							
1104 : 4096	Reserved							

- POLCSCNO: Policy Script number to store information in this PCB. A valid number ranges from 01 to 32. This value is equivalent to the Policy Script number entered on the LPRPOL frame with the "E2" function.
- POLCSCNA: Policy Script name comprising EBCDIC uppercase characters of alphanumerics, comma, and space. If the name is less than 8 bytes, the blank area must be filled with EBCDIC spaces. The value in this entry is equivalent to the Policy Script name entered on the LPRPOL frame with the "E2" function.
- POLCMCNT: The number of valid POLCMDn entries. A valid number ranges from 0 to 15. The number 0 has a special meaning that the POLCMDCs in all POLCMDn entries are considered all spaces regardless of their actual contents. Also see explanation on POLCMDC under POLCMDn.
- POLCEMAP: The bit position mapping indicating errors in PMC commands. It has been stored at the completion of operation by the Policy Manager. For example, if a bit position 2 is "1," then it means that an error is detected in the POLCMD2. If all bits are "0," then it means that there is no error-detected PMC command. When one or more bits are "1," a major error code is stored into the POLCRTN.
- POLCRTN: The completion code indicating completion statuses of PMC command interpretation and execution. All zeros mean no error while a non-zero value means that there is at least one error-detected PMC command. Which PMC command is in error is indicated by the POLCEMAP. In such a case, it must be noted that the contents of the POLCRTN are also stored into the first operand of the Policy Diagnose instruction with additional 16-bit zeros appended to the right. Hence, if the program only checks general register contents for errors, it cannot detect errors.
- POLCMDn (n = 1-15): Entries of PMC commands and relevant information. Each entry has the format shown below. These subentries are valid only when the associated entry number is stored in the POLCMCNT. An invalid entry, although not checked but ignored, is recommended to be filled with zeros.

0	60	62	64	72
POLCMDC	Reserved	POLCERRM	POLCLPAR	

  Explanation on each of the subentries follows.

- POLCMDC: PMC command text with EBCDIC uppercase characters. The blank area subsequent to the command text must be filled with EBCDIC spaces.
- POLCERRM: Message number of the pertinent MLPF message in hexadecimal. Zeros are stored at the completion of operation without an error, or the message number indicating an error is stored if the Policy Manager has detected an error and the proper MLPF message exists. Note that both the POLCEMAP and POLCRTN entries also indicate an error if this POLCERRM subentry does not contain all zeros. However, all zeros in this subentry do not necessarily mean an error-free status because there may be an error with no MLPF message.
- POLCLPAR: Target LPAR name for this PMC command in EBCDIC uppercase characters if the PMC command requires the target LPAR, or all EBCDIC spaces if the PMC command does not require the target LPAR. In the former case, the blank area subsequent to the LPAR name must be filled with EBCDIC spaces. The value in this subentry is equivalent to the target LPAR name entered on the LPRPOL frame with the "E2" function.

© COMPAREX Informationssysteme GmbH

Type-2 PCB

Type-2 PCB is used by the PFCs of WRITE-SCHEDULE, POLICY-ON, and POLICY-OFF. The length of a Type-2 PCB is variable up to 4096 bytes. Table 3-5 shows the Type-2 PCB format. Explanation on each entry follows.

Table 3-5 Type-2 PCB Format

	0	1	2	3	4	5	6	7
0	Reserved				POLSPRNO	Reserved		
8	POLSPRNA							
16	POLSDCNT	POLSCLS	Reserved		POLSEMAP		POLSRTN	
24	POLSCR1							
48	POLSCR2							
72	:							
:	:							
360	POLSCR15							
384	Reserved							
:								
4096								

- POLSPRNO: Policy Profile number to store information in this PCB. A valid number ranges from 1 to 8. This value is equivalent to the Policy Profile number entered on the LPRPOL frame with the "E1" function.
- POLSPRNA: Policy Profile name comprising EBCDIC uppercase characters of alphanumerics, comma, and space. If the name is less than 8 bytes, the blank area must be filled with EBCDIC spaces. The value in this entry is equivalent to the Policy Profile name entered on the LPRPOL frame with the "E1" function.
- POLSDCNT: The number of valid POLSCRn entries. A valid number ranges from 0 to 15. The number 0 has a special meaning that the POLSDATEs in all POLSCRn entries are considered all spaces regardless of their actual contents. Also see explanation on POLSDATE under POLSCRn.
- POLSCLS: Policy Profile class. Specifying "1" to the first bit of this entry and executing the PFC of WRITE-SCHEDULE means that the Policy Profile is to be placed in the emergency class. When more than one Policy Profile is specified for the emergency class, only the last-specified Policy Profile will be placed in the emergency class. The value in this entry is equivalent to the Policy Profile class entered on the LPRPOL frame with the "E1" function.
- POLSEMAP: The bit position mapping indicating errors in Policy Scripts. It has been stored at the completion of operation by the Policy Manager. For example, if a bit position 2 is "1," then it means that an error is detected in the POLSCR2. If all bits are "0," then it means that there is no error-detected Policy Script. When one or more bits are "1," a major error code is stored into the POLSRTN.
- POLSRTN: The completion code indicating completion statuses of Policy Script execution. All zeros mean no error while a non-zero value means that there is at least one error-detected Policy Script. Which Policy Script is in error is indicated by the POLSEMAP. In such a case, it must be noted that the contents of the POLSRTN are also stored into the first operand of the Policy Diagnose instruction with additional 16-bit zeros appended to the right. Hence, if the program only checks general register contents for errors, it cannot detect errors.
- POLSCRn (n = 1-15): Entries of information relating to Policy Script execution control. Each entry has the format shown below. These subentries are valid only when the associated entry number is stored in the POLSDCNT. An invalid entry, although not checked but ignored, is recommended to be filled with zeros.

0	10	12	17	20	21	22	24
POLSDATE	Reserved	POLSTIME	Reserved	POLSNO	Reserved	POLSERRM	

  Explanation on each of the subentries follows.

- POLSDATE: Policy Script execution date in EBCDIC uppercase characters. The blank area subsequent to the date must be filled with EBCDIC spaces. The value in this subentry is equivalent to the Policy Script execution date entered on the LPRPOL frame with the "E1" function.

© COMPAREX Informationssysteme GmbH

- POLSTIME: Policy Script execution time in EBCDIC uppercase characters. The blank area subsequent to the time must be filled with EBCDIC spaces. The value in this subentry is equivalent to the Policy Script execution time entered on the LPRPOL frame with the "E1" function. Note that this POLSTIME subentry setting is meaningful only when the POLSDATE subentry setting is not "IMMEDIATE." Otherwise, the POLSTIME subentry setting is ignored.
- POLSNO: Policy Script number corresponding to this POLSCRn entry. A valid value ranges from 1 to 32. The value in this subentry is equivalent to the Policy Script number entered on the LPRPOL frame with the "E1" function.
- POLSERRM: Message number of the pertinent MLPF message in hexadecimal. Zeros are stored at the completion of operation without an error, or the message number indicating an error is stored if the Policy Manager has detected an error and the proper MLPF message exists. Note that both the POLSEMAP and POLSRTN entries also indicate an error if this POLSERRM subentry does not contain all zeros. However, all zeros in this subentry do not necessarily mean an error-free status because there may be an error with no MLPF message.

© COMPAREX Informationssysteme GmbH

3.3 PMC Command

This section describes PMC commands in alphabetical order of the command name. Of the commands for control of a specific LPAR, certain commands are effective only to an OS-LPAR. Table 3-6 shows the PMC command list and whether each PMC command requires specifying of the target LPAR name or not.

Symbolic conventions

- $\left\{\begin{matrix}\texttt{X}\\\texttt{Y}\end{matrix}\right\}$: Indicates either X or Y can be selected. When choice can be omitted (indicated in a bracket) and no selection is made, an underlined choice will be taken as a default.
- [X]: Indicates X can be omitted.
- Δ: Indicates that one or more blanks are required.
- `Normal_text`: Indicates that the text must be typed as it is.
- *`Italic_text`*: Indicates that what is meant by the text must be entered as a specific text or value.

Table 3-6 Command List

PMC Command	Necessity of Target LPAR Name
ACT	√
ACTDEF	√
DEACT	√
DEFINE	√
IPL	√
LCTOFFST	√
MODIFY2	—
OPRCH	√
SAVE	—
SET	—
SYSTEM	√
VARY	—

3.3.1 ACT Command

- Function: Activates the target LPAR.
- Input format: `ACT`
- Functionally equivalent commands:
  - LPAR control command ACTIVATE.
  - LPAR frame command F3 on LPRDEF and SLPDEF frames.

3.3.2 ACTDEF Command

- Function: Alters the following LPAR configuration definition items of the target LPAR in activated status: automatic activation, protection, and TOD offset.
- Input format: `ACTDEF[ΔAACTIV=`$\left\{\begin{matrix}\texttt{YES}\\\texttt{NO}\end{matrix}\right\}$`] [ΔPR=`$\left\{\begin{matrix}\texttt{YES}\\\texttt{NO}\end{matrix}\right\}$`] [ΔTIMOFST=`$\left\{\begin{matrix}+\\-\end{matrix}\right\}$*`ddddddhhmmss`*`]`
- Operands:
  - `AACTIV=YES` or `AACTIV=NO`: Enables (YES) or disables (NO) automatic LPAR activation.
  - `PR=YES` or `PR=NO`: Enables (YES) or disables (NO) LPAR protection. When enabled, all the LPAR frame operations except the following are rejected: PR=NO specifying with the PMC command of ACTDEF or DEFINE, and the PMC command of READLPAR.

© COMPAREX Informationssysteme GmbH

- TIMOFST=...: Specifies an LPAR TOD offset value.
  - + or - sign: Adds (+) or subtracts (-) the offset to/from the CPU TOD value.
  - ddddd: Specifies the number of dates in decimal five digits (00000-99999).
- *hh*: Specifies hours in decimal two digits (00-23).
- *mm*: Specifies minutes in decimal two digits (00-59).
- *ss*: Specifies seconds in decimal two digits (00-59).

- Functionally equivalent commands:
  - With AACTIV=YES or AACTIV=NO operand:
    - PMC command DEFINE with AACTIV=YES or AACTIV=NO operand.
    - Input to A field on LPRDEF and SLPDEF frames.
  - With PR=YES or PR=NO operand:
    - PMC command DEFINE with PR=YES or PR=NO operand.
    - Input to PR field on LPRCTL and SLPDEF frames.
  - With TIMOFST=... operand:
    - PMC command DEFINE with TIMOFST=… operand.
    - Input to LOCAL OFFSET fields on LPRTOD frame.

3.3.3 DEACT Command

- Function: Deactivates the target LPAR.
- Input format: DEACT
- Functionally equivalent commands:
  - LPAR control command DEACTIVATE.
  - LPAR frame command F4 on LPRDEF and SLPDEF frames.

3.3.4 DEFINE Command

- Function: Defines the settings of the LPAR configuration and options. For each definition item, see chapter 4.
- Input format: One DEFINE command string can specify multiple operands of the same type and cannot mix operands of different types.
  - LPAR basic definition operands:

```
DEFINE[ΔCPUMODE={ESA|HCF|DMY}][ΔCPUID=CPUID][ΔSRV=Service_ratio]
[ΔTIM=Time_slice][ΔAIPLUNIT=Device#][ΔIPLUNIT=Device#]
[ΔDIPLUNIT=Device#][ΔAACTIV={YES|NO}][ΔALOAD={YES|NO}]
[ΔAACTPLV=Order][ΔIPLPARM=Parameter][[ΔAIPPARM=Parameter]]
[ΔAIPLINO=CPU_address]
```

© COMPAREX Informationssysteme GmbH

- LPAR storage definition operands:
  DEFINE[[ΔMS=*MS_extent*]][ΔMSLOC=*MS_origin*]
  [ΔMSR=*MSR_size*][ΔES=*ES_extent*][ΔESLOC=*ES_origin*]
  [ΔESR=*ESR_size*]

- LPAR control definition operands:

  DEFINE[ΔWC={YES|NO}]ΔRC[{YES|NO}][ΔIO{YES|NO}][ΔRF{YES|NO}]
  [ΔPR={YES|NO}][ΔIS={YES|NO}][ΔXL={YES|NO}][ΔAD={YES|NO}][ΔMF={YES|NO}]
  [ΔTM={YES|NO}][ΔTW={YES|NO}][ΔBR={YES|NO}][ΔMD={YES|NO}]
  [ΔINTCF={YES|NO}][ΔPL={YES|NO}][ΔPX={YES|NO}]

- LPAR IP definition operands:
  DEFINE[ΔDINLIP=*Number*][ΔDRNLIP=*Number*]
  [ΔSINLIP=*Number*][ΔSRNLIP=*Number*][ΔDICLIP=*Number*]
  [ΔDRCLIP=*Number*][ΔSICLIP=*Number*][ΔSRCLIP=*Number*]
  [ΔGROUPPIP=*Physical_IP_group#*][ΔINTCF={YES|NO}]

- LPAR ICF definition operands:

  DEFINE[ΔKSU={0|1|B}][ΔKE={YES|NO}][ΔSPC={YES|NO}][ΔENA={YES|NO}]
  [ΔCDX=*CDX_number*]

- LPAR TOD setting operand: DEFINEΔTIMOFST=*LPAR_local_offset*

- Operands:
  - LPAR basic definition operands:
    - CPUMODE=...: Specifies the CPU mode-ESA/390, HCF, or Dummy.
    - CPUID=...: Specifies the CPUID. Not available for the emergency-class Policy Profile.
    - SRV=...: Specifies the service ratio.
    - TIM=...: Specifies the time-slice value.
    - AIPLUNIT=...: Specifies the device number for auto IPL.
    - IPLUNIT=...: Specifies the device number for manual IPL.
    - DIPLUNIT=...: Specifies the device number for manual dump IPL.
    - AACTIV=...: Enables (YES) or disables (NO) automatic LPAR activation.
    - ALOAD=...: Specifies auto IPL (YES) or manual IPL (NO).
    - AACTPLV=...: Specifies the order of automatic LPAR activation.
    - IPLPARM=...: Specifies the load parameter for manual IPL.
    - AIPLPARM=...: Specifies the load parameter for auto IPL.
    - AIPLINO=...: Specifies the LIP CPU address for auto IPL.

© COMPAREX Informationssysteme GmbH

- LPAR storage definition operands:
  - `MS=...`: Specifies the MS extent.
  - `MSLOC=...`: Specifies the MS origin.
  - `MSR=...`: Specifies the Reserved MS size.
  - `ES=...`: Specifies the ES extent.
  - `ESLOC=...`: Specifies the ES origin.
  - `ESR=...`: Specifies the Reserved ES size.
- LPAR control definition operands (each with YES or NO option):
  - `WC=...`: Enables (YES) or disables (NO) wait completion.
  - `RC=...`: Enables (YES) or disables (NO) resource capping.
  - `IO=...`: Enables (YES) or disables (NO) SCDS Access Enable and DRM.
  - `RF=...`: Enables (YES) or disables (NO) Resource Measurement Facility.
  - `PR=...`: Enables (YES) or disables (NO) Protected LPAR setting.
  - `IS=...`: Enables (YES) or disables (NO) Isolate control.
  - `XL=...`: Enables (YES) or disables (NO) Dynamic LPAR Reconfiguration.
  - `AD=...`: Enables (YES) or disables (NO) Asynchronous Data Mover Facility.
  - `MF=...`: Enables (YES) or disables (NO) Integrated Coupling Migration Facility.
  - `TM=...`: Enables (YES) or disables (NO) Time Machine Facility.
  - `TW=...`: Enables (YES) or disables (NO) Time Warp Facility.
  - `BR=...`: Enables (YES) or disables (NO) Alarm Bell.
  - `MD=...`: Enables (YES) or disables (NO) MDC and MPFACTOR setting.
  - `PL=...`: Enables (YES) or disables (NO) Policy Diagnose instruction.
  - `PX=...`: Enables (YES) or disables (NO) PMC command.
- LPAR IP definition operands (LIP for logical IP and PIP for physical IP):
  - `DINLIP=...`: Specifies the LIP count in dedicated-and-initial mode.
  - `DRNLIP=...`: Specifies the LIP count in dedicated-and-reserved mode.
  - `SINLIP=...`: Specifies the LIP count in shared-and-initial mode.
  - `SRNLIP=...`: Specifies the LIP count in shared-and-reserved mode.
  - `DICLIP=...`: Specifies the LIP count in dedicated-and-initial-and-ICF mode.
  - `DRCLIP=...`: Specifies the LIP count in dedicated-and-reserved-and-ICF mode.
  - `SICLIP=...`: Specifies the LIP count in shared-and-initial-and-ICF mode.
  - `SRCLIP=...`: Specifies the LIP count in shared-and-reserved-and-ICF mode.
  - `GROUPPIP=...`: Specifies the PIP scheduling group number.
  - `INTCF=...`: Enables (YES) or disables (NO) Integrated Coupling Facility.
- LPAR ICF definition operands:
  - `KSU=...`: Defines the KSU number for ICF. KSU=B specifies both KSUs.
  - `KE=...`: Allows (YES) or inhibits (NO) cryptographic key entry via KSU keytops.
  - `SPC=...`: Enables (YES) or disables (NO) special secure mode.
  - `ENA=...`: Allows (YES) or prohibits (NO) use of ICF.
  - `CDX=...`: Specifies the CDX number.
- `TIMOFST=...` (LPAR TOD setting operand): Specifies the LPAR TOD local offset.
- Functionally equivalent commands: Input to each field on LPRCTL, LPRDEF, LPRICF, LPRIPN, LPRRSC, LPRTOD, SLPDEF, SLPOP, and SLPSY frames.

© COMPAREX Informationssysteme GmbH

3.3.5 IPL Command

- Function: Executes IPL. Effective only to an OS-LPAR (consequently meaningless to CF2000-0xA Models).
- Input format: IPLΔIP=*CPU_address*ΔUNIT=*Unit_address*

  [ΔLOADPARM=*Parameter*] [Δ{NORMAL / CLEAR / REWIND}]
- Operands:
  - IP=*CPU_address*: Specifies the CPU address for a logical IP to be IPLed.
  - UNIT=*Unit_address*: Specifies the loading device for IPL of an LPAR. Input as the unit address must be a device number.
  - LOADPARM=*Parameter*: Specifies a load parameter in up to eight characters to be used by the OS during IPL.
  - NORMAL (default), CLEAR, or REWIND: Specifies IPL start-normal start, start after system clear reset, or start after rewind command issuance-to a magnetic tape unit specified by the UNIT operand.
- Functionally equivalent commands:
  - LPAR control command SYSTEM IPL.
  - LPAR frame commands O4, O7, and O9 on SLPOP frame.
  - LPAR frame commands C and D on SLPSY frame.

3.3.6 LCTOFFST Command

- Function: Controls the LPAR Local TOD/Offset setting.
- Input format: LCTOFFSTΔ{ACTIVE / INACTIVE}
- Operand (ACTIVE or INACTIVE): ACTIVE enables or INACTIVE disables the LPAR Local TOD/Offset setting.
- Functionally equivalent command: LPAR frame command OEN on LPRTOD frame.

3.3.7 MODIFY2 Command

- Function: Defines the scheduling group of the selected physical IP. Not available for the emergency-class Policy Profile.
- Input format: MODIFYΔIP=*Physical_IP_address*ΔGROUP=Physucal_IP_group#
- Operands:
  - IP=*Physical_IP_address*: Specifies the target physical IP.
  - GROUP=*Physical_IP_group#*: Specifies the physical IP scheduling group for the target physical IP.
- Functionally equivalent command: Input to PIP GROUP field on LPRIPN frame.

3.3.8 OPRCH Command

- Function: Sets the specified channel path status to online/offline.
- Input format: OPRCHΔCHP=*CHPID*Δ{ONLINE / OFFLINE}
- Operands:
  - CHP=*CHPID*: Specifies the target channel path.
  - ONLINE or OFFLINE: Onlines or offlines the specified channel path.

© COMPAREX Informationssysteme GmbH

- Functionally equivalent commands:
  - LPAR control command SYSTEM CHP.
  - Input to ONLINE field on LPRCH frame.

3.3.9 SAVE Command

- Function: Saves the currently-defined LPAR configuration information into the LPAR configuration file in the SVP hard disk.
- Input format: `SAVEΔALL`
- Operand (`ALL`): Subcommand (mandatory input).
- Functionally equivalent commands: LPAR frame command F2 on LPRCH, LPRCTL, LPRDEF, LPRICF, LPRIPN, LPRRSC, LPRTIP, LPRTOD, and SLPDEF frames.

Note: *The SAVE command is not effective for saving of MLPF Policy definition, PF key texts, or MLPF system option setting. To save the MLPF Policy definition and PF key texts into the corresponding LPAR control file in the SVP, the command "F2" must be entered each on the LPRPOL frame and on the LPRPFK frame. On the other hand, the control information defined on the LPROPT frame is automatically saved, regardless of the Auto Save setting, at every pressing of the Enter key on the LPROPT frame.*

3.3.10 SET Command

- Function: Defines the setting of the MLPF system options.
- Input format:

$$\texttt{SET}\left[\texttt{ΔAUTOSAVE=}\left\{\begin{matrix}\texttt{YES}\\\texttt{NO}\end{matrix}\right\}\right]\left[\texttt{ΔSYSACTPT=}\left\{\begin{matrix}\texttt{YES}\\\texttt{NO}\end{matrix}\right\}\right]$$
$$\left[\texttt{ΔCONFIRME=}\left\{\begin{matrix}\texttt{YES}\\\texttt{NO}\end{matrix}\right\}\right]\left[\texttt{ΔPOLERRSP=}\left\{\begin{matrix}\texttt{YES}\\\texttt{NO}\end{matrix}\right\}\right]$$

- Operands:
  - `AUTOSAVE=...`: Enables (YES) or disables (NO) the Auto Save function.
  - `SYSACTPT=...`: Enables (YES) or disables (NO) partitioned activity display on the SYSACT frame.
  - `CONFIRME=...`: Enables (YES) or disables (NO) every confirmation prompt prior to execution of applicable commands in the same scope as the CONFIRM function of the LPROPT frame. For details, see section 7.11.
  - `POLERRSP=...`: Continues (YES) or terminates (NO) MLPF Policy execution when an error occurs.
- Functionally equivalent command: Input to ENABLE field on LPROPT frame.

3.3.11 SYSTEM Command

- Function: Starts a system reset or system clear reset. Effective only to an OS-LPAR (consequently meaningless to CF2000-0xA Models).
- Input format:

$$\texttt{SYSTEMΔ}\left\{\begin{matrix}\texttt{RESET}\\\texttt{RESETΔCLEAR}\\\texttt{RESTARTΔIP=}\textit{CPU\_address}\\\texttt{SYSIML}\end{matrix}\right\}$$

- Operands:
  - `RESET`: Specifies a system reset.
  - `RESETΔCLEAR`: Specifies a system clear reset.
  - `RESTARTΔIP=`*`CPU_address`*: Specifies a restart of the logical IP specified with the CPU address.
  - `SYSIML`: Specifies an LPAR initialization.
- Functionally equivalent commands:
  - LPAR control commands SYSTEM RESET and SYSTEM RESTART.
  - LPAR frame commands O2, O3, O6, and O8 on SLPOP frame.

© COMPAREX Informationssysteme GmbH

- LPAR frame command P on SLPSY frame.

3.3.12 VARY Command

- Function: Reconnects or disconnects a physical IP.
- Input format:
- Operands:
  - `IP=`*`Physical_IP_address`*: Specifies the target physical IP address.
  - `ONLINE` or `OFFLINE`: Onlines or offlines the target physical IP. Specifying of the OFFLINE operand prerequires offlining of any logical IP shared by the target physical IP from the operating system.
- Functionally equivalent command: LPAR control command SYSTEM IP.

© COMPAREX Informationssysteme GmbH

4 LPAR CONFIGURATION DEFINITION

4.1 Configuration Definition Procedure

LPAR configuration definition on each model of C2000-xxA,C2000-xxB, and C2000-xxC consists of two steps shown below. Only the latter is needed on each CF2000-0xA Model.

1. Define LPAR name, define correspondence between LPAR name and channel path, and specify each channel path to be reconfigurable or not, altogether by means of the creator program of the SCDS: IOCP (IBM's program product) or HCD (IBM's program product).
2. Set LPAR configuration definition items on specific frames.

4.1.1 Definition by Creator Program of SCDS

To prepare SCDS for LPARs on each model of the C2000-xxA Models, the C2000-xxB Models,or the C2000-xxC Modles, one of the above-mentioned creator programs as applicable must be executed. The machine type must be specified as follows:

- C2000-xxA Models or C2000-xxB Models: 9672-5
- C2000-xxC: 9672-6

For detailed information on use of IOCP or HCD, see IBM publication GC38-0097 *IBM ES/9000 ES/3090 Input/Output Configuration Program User Guide*, or GC38-0401 *IBM ES/9000 Input/Output Configuration Program User's Guide and ESCON Channel-to-Channel Reference*.

This step of SCDS preparation is not required for the CF2000-0xA Models since SCDSs for these models are preinstalled and not subject to alteration except LPAR names.

4.1.2 Definition by Frame

Table 4-1 lists frame names, definition items and initial values. The initial values mean those automatically set for a newly-named LPAR with the first SYSIML clear after generation of SCDS. Since LPARs do not operate with some of these initial values (e.g., MS size = 0 MB), the operator should define individual LPAR configuration on relevant frames (sections 4.2 thru 4.7 about mandatory definition actions, and sections 4.8 thru 4.12 about as-necessary definition actions). Once the values are set, they can be stored in independent files (separate from SCDS) through frame operations (section 4.13).

Table 4-1 Definition Items for LPAR Configuration

Definition Frame	Definition Item	Initial Value (Sheet 1 of 3)
LPRDEF or part of SLPDEF	Operating mode	ESA (ESA/390 mode) on C2000-xxA, C2000-xxB, and C2000-xxC; HCF on CF2000 models
	Activation priority	Undefined (space)
	Auto Activation option	Manual
	MS size	0 MB
	ES size	0 MB
	Auto IPL option	NO
	IPL CPU address	0
	IPL device number	0000
	IPL load parameter	Undefined (space)
	CPUID*	VVLPSSSS*
LPRRSC or part of SLPDEF	Service ratio	100
	Time-slice value	10 ms
	MS origin	Undefined (space)
	MS extent	0 MB

© COMPAREX Informationssysteme GmbH

Definition Frame	**Definition Item**	**Initial Value** **(Sheet 2 of 3)**
LPRRSC or part of SLPDEF (cont.)	Reserved MS size	0 MB
	ES origin	Undefined (space)
	ES extent	0 MB
	Reserved ES size	0 MB
LPRCTL or part of SLPDEF	Wait completion	NO
	Resource capping	NO
	SCDS access enable and DRM	YES
	RMF	YES
	Isolate	NO
	Protected LPAR	NO
	Dynamic LPAR Reconfiguration	NO
	ADMF**	NO
	ICMF	NO
	Time Machine**	NO
	Time Warp**	NO
	Alarm Bell	NO
	MDC Enable	YES
	Policy Diagnose	NO
	PMC Command	NO
LPRIPN or part of SLPDEF	Logical IP count by mode	All 0
	Physical IP group scheduling or Virtual Server number to LPAR	Undefined (space)
	Alternate Processor availability	NO on C2000-xxA, C2000-xxB, and C2000-xxC; YES on CF2000-0xA
	Service ratio	100
	Physical IP group scheduling to physical IP†	Undefined (space)
LPRCH	Online/offline	OFFLINE
	CHPID-LPAR#[/SHARED]	Value defined by creator of SCDS
LPRICF††	Key Storage Unit	Undefined (space)
	Key entry	NO
	Special Secure mode	NO
	ICF Enable	NO
	ICF time-slice value	100
	CDX Bit Map (0-15)	All NO
LPROPT	Auto Save	NO
	SYSACT Partition	NO
	Confirmation	NO
	Policy error skip	NO
LPRPFK	PF key text	Undefined (space)

© COMPAREX Informationssysteme GmbH

Definition Frame		Definition Item	Initial Value (Sheet 3 of 3)
LPRPOL	Policy Profile	Profile number	01
		Profile name	Undefined (space)
		Profile status	INACT
		Profile class	Normal
		Date/event, Time, No.	Undefined (space)
	Policy Script	Script number	01
		Script name	Undefined (space)
		PMC command	Undefined (space)
		Target LPAR	Undefined (space)
LPRTOD		LPAR Local TOD setting	Current physical time of processor
		LPAR Local Offset setting	+ 00:00:00
		LPAR Local TOD/Offset enable	NO
		Time Accelerator enable	NO
		Acceleration multiplying factor	Undefined (space)
‡		‡	‡
		‡	‡
		‡	‡

* See section 2.3.5. Alteration of version code (VV) is disabled in VSF mode.
** Not available on CF2000-0xA Models.
† Alteration disabled in VSF mode.
†† Available only on ICF-installed processor models (C2000-xxA and C2000-xxB).
‡´ Intentionally left blank.

© COMPAREX Informationssysteme GmbH

4.2 Definition of Basic Items

The LPRDEF frame defines basic configuration items for all LPARs. As an alternative, the SLPDEF frame can define almost the same items for a specific LPAR (with exceptions of MS, ES and channel configurations). Figures 4-1 thru 4-2 illustrate the respective definition images on the LPRDEF and SLPDEF frames by processor model. An underlined part denotes an input area to which a definition parameter is entered. Bold letters denote information relevant to the definition operation. Details of the definition operation are given in Table 4-2.

```
         1         2         3         4         5         6         7         8
12345678901234567890123456789012345678901234567890123456789012345678901234567890
 1 LPAR  1 : LPAR0001  LPAR CONFIG DEFINITION         (LPRDEF) YY/MM/DD HH:MM:SS
 2 SCDS    : A0
 3             MODE S  AP  A    MS     ES IP  CH F IP/DEV# PARM     VER/SER#
 4 PHYSICAL                    1004   1024 11 128                    8A  00001
 5 L-LPAR
 6   1 LPAR0001 ESA  A   1  A   256    512  4  64 N 0 0640           8A  10001
 7   2 LPAR0002 ESA  D  99  A    96    128  2  32 N 0 0740           8A  20001
 8   3 LPAR0003 HCF  D      M   256      0  1   0 N 0 0470           8A  30001
 9   4 LPAR0004 ESA  D      M     0      0  0   0 N 0 0000           8A  40001
10   5 LPAR0005 ESA  D      M     0      0  0   0 N 0 0000           8A  50001
11   6 LPAR0006 ESA  D      M     0      0  0   0 N 0 0000           8A  60001
12   7 LPAR0007 ESA  D      M     0      0  0   0 N 0 0000           8A  70001
13   8 LPAR0008 ESA  D      M     0      0  0   0 N 0 0000           8A  80001
14   9 LPAR0009 ESA  D   3  A    32      0  2  16 N 0 0340           8A  90001
15  10 LPAR0010 DMY  D   2  A     0      0  2   0 N 0 0000
16
17 F-FUNCTION              Z-LPAR FRAME INDEX (LPRIDX)
18  1-DEFINE/L             Z+FUNCTION CODE ON LPRIDX
19  2-SAVE                  -DIRECT LPAR FRAME CALL
20  3-ACTIVATE/L
21  4-DEACTIVATE/L
22
```

```
         1         2         3         4         5         6         7         8
12345678901234567890123456789012345678901234567890123456789012345678901234567890
 1 LPAR  1 : LPAR0001  LPAR DEFINITION ASSORTED       (SLPDEF) YY/MM/DD HH:MM:SS
 2 SCDS    : A0
 3  STATUS : A  PIP : 11  LIP :  4  CH :  64  USG% : 100.0
 4 D-CONFIGURATION DEFINITION
 5    MODE : ESA  A : A    AP :  1
 6       F : N   IP : 0  DEV# : 0640  PARM :           VER : 8A  SER# : 10001
 7 I-IP DEFINITION
 8                    <DEDICATED>  < SHARED  >
 9                    <INI> <RSV>  <INI> <RSV>  PIP ALT
10           SUM                                GRP IP
11   LOGICAL  6        0  2  0  0   3  0  1  0       N
12 R-RESOURCE DEFINITION
13    SRV : 100   TIM :  50
14    MSO :       MSE :  256 MSR :    0 ESO :        ESE :    512 ESR :      0
15 T-CONTROL DEFINITION
16    WC : Y  RC : Y  IO : N  RF : Y  IS : N  PR : N  XL : Y  AD : N  MF : Y
17    TM : Y  TW : N  BR : N  MD : Y  PL : Y  PX : Y
18 F-FUNCTION              Z-LPAR FRAME INDEX (LPRIDX)
19  2-SAVE                 Z+FUNCTION CODE ON LPRIDX
20  3-ACTIVATE/SL           -DIRECT LPAR FRAME CALL
21  4-DEACTIVATE/SL
22
```

Figure 4-1 Definition of Basic Configuration Items on C2000-xxA, C2000-xxB, and C2000-xxC

Note: *The display images denote C2000-A2A in non-VSF mode with one IntCF IP by the number of IPs, version code, and certain field settings. These parameters vary with processor configurations.*

© COMPAREX Informationssysteme GmbH

```
         1         2         3         4         5         6         7         8
12345678901234567890123456789012345678901234567890123456789012345678901234567890
 1 LPAR  1 : HCF1      LPAR CONFIG DEFINITION         (LPRDEF) YY/MM/DD HH:MM:SS
 2 SCDS    : A0
 3             MODE S  AP  A    MS     ES IP  CH F IP/DEV# PARM     VER/SER#
 4 PHYSICAL                    1004   1024 11  32                     80  00000
 5 L-LPAR
 6   1 HCF1    HCF  A   1  A   256    512  4   8 N 0 0000           80  10000
 7   2 HCF2    HCF  D  99  A    96    128  2   8 N 0 0000           80  20000
 8   3 HCF3    HCF  D      M   256      0  1   0 N 0 0000           80  30000
 9   4 HCF4    HCF  D      M     0      0  0   0 N 0 0000           80  40000
10   5 HCF5    HCF  D      M     0      0  0   0 N 0 0000           80  50000
11   6 HCF6    HCF  D      M     0      0  0   0 N 0 0000           80  60000
12   7 HCF7    HCF  D      M     0      0  0   0 N 0 0000           80  70000
13   8 HCF8    HCF  D      M     0      0  0   0 N 0 0000           80  80000
14   9 HCF9    HCF  D   3  A    32      0  2   8 N 0 0000           80  90000
15  10 HCF10   HCF  D   2  A    32      0  2   8 N 0 0000           80  A0000
16
17 F-FUNCTION              Z-LPAR FRAME INDEX (LPRIDX)
18  1-DEFINE/L             Z+FUNCTION CODE ON LPRIDX
19  2-SAVE                  -DIRECT LPAR FRAME CALL
20  3-ACTIVATE/L
21  4-DEACTIVATE/L
22
```

```
         1         2         3         4         5         6         7         8
12345678901234567890123456789012345678901234567890123456789012345678901234567890
 1 LPAR  1 : HCF1      LPAR DEFINITION ASSORTED       (SLPDEF) YY/MM/DD HH:MM:SS
 2 SCDS    : A0
 3  STATUS : A  PIP : 11  LIP :  4  CH :   8  USG% : 100.0
 4 D-CONFIGURATION DEFINITION
 5    MODE : HCF  A : A    AP :  1
 6       F : N   IP : 0  DEV# : 0000  PARM :           VER : 80  SER# : 10000
 7 I-IP DEFINITION
 8                    <DEDICATED>  < SHARED  >
 9                    <INI> <RSV>  <INI> <RSV>  PIP ALT
10           SUM                                GRP IP
11   LOGICAL  6        5     1      0     0          Y
12 R-RESOURCE DEFINITION
13    SRV : 100   TIM :  50
14    MSO :       MSE :  256 MSR :    0 ESO :        ESE :    512 ESR :      0
15 T-CONTROL DEFINITION
16    WC : Y  RC : Y  IO : N  RF : Y  IS : N  PR : N  XL : Y          MF : Y
17                    BR : N  MD : Y  PL : N  PX : Y
18 F-FUNCTION              Z-LPAR FRAME INDEX (LPRIDX)
19  2-SAVE                 Z+FUNCTION CODE ON LPRIDX
20  3-ACTIVATE/SL           -DIRECT LPAR FRAME CALL
21  4-DEACTIVATE/SL
22
```

Figure 4-2 Definition of Basic Configuration Items on CF2000-0xA

Note: *The display images denote CF2000-0xA by the number of IPs and version code. These parameters vary with processor configurations.*

© COMPAREX Informationssysteme GmbH

Table 4-2 Operation Details for Definition of Basic Configuration Items

Definition Item	**Field on Frame**		**Explanation** **(Sheet 1 of 2)**
	LPRDEF	**SLPDEF**	
Physical processor configuration (display only)	PHYSICAL at MS, ES, IP, CH, and VER/SER#	PIP	Displays (part of) the following values in physical configuration: MS minus Hypervisor-allocated block size in MB, ES size in MB, number of IPs, number of channel paths, and version code and serial number in CPU ID.
LPAR number and LPAR name (display only)	1 thru 10 on F-9 and 1 thru 15 on C2000-xxA, each followed by LPAR name	—	Displays LPAR names (e.g., “LPAR0001” thru “LPAR0010” in Figure 4-1) specified by creator program of SCDS or, on the CF2000 models, by the HCFCNF frame. LPAR number assignment as well as display order of LPAR numbers and names can be user-defined (as specified by the IZPIOCP parameters or equivalent).
CPU mode of LPAR	MODE	MODE	Specifies the CPU mode: “ESA” (ESA/390), “HCF” (HCCF-LPAR), or “370” as applicable.
Status of LPAR (display only)	S	STATUS	Displays the status: "A" (activated), "D" (deactivated), "P" (activation pending), or "C" (check-stopped).
Activation priority of LPAR	AP	AP	Specifies the order of automatic activation in decimal numbers 1 thru 99.
Activate mode of LPAR	A	A	Specifies the Activate mode: “A” (Auto) or “M” (Manual). Specifying “A” in this field forcibly changes the Activate mode from Manual to Auto.
MS size of LPAR	MS for LPARs*	—	Specifies an MS size in MB. A maximum size assignable to an LPAR is the value displayed in the “PHYSICAL” field – physically installed MS minus Hypervisor-allocated block size (model-dependent unit size boundary in Real MS Capacity Expansion mode; 1 MB boundary otherwise) – or 2048, whichever is smaller. In Real MS Capacity Expansion mode, the MS size specified here must be in increments of model-dependent unit size.
ES size of LPAR	ES for LPARs*	—	Specifies an ES size in MB. A maximum size assignable to an LPAR is the value displayed in the “PHYSICAL” field, i.e., a physically installed ES size. In Real MS Capacity Expansion mode, the ES size specified here must be in increments of model-dependent unit size.
Number of IPs for LPAR (display only)	IP for LPARs	LIP	Displays the number of logical IP(s) allocated to an LPAR. (See section 4.5 for allocation of IPs.)
Number of channels for LPAR (display only)	CH	CH	Displays the number of channel path(s) to be allocated to the target LPAR as specified by creator program of SCDS.

Auto IPL option	F, IP/DEV#, PARM	F, IP, DEV#, PARM	• F: Specifies auto IPL or manual IPL for an LPAR.
			  • Y: Auto IPL (automatic IPL after activation) for an LPAR in ESA mode. No effect and treated as "N" on an LPAR in HCF or Dummy mode.
			  • N: Manual IPL.
			• IP: Specifies a logical CPU address for auto IPL. With no input in this field, the system assumes the smallest available CPU address. No effect on an LPAR in HCF or Dummy mode.
			• DEV#: Specifies a device number for auto IPL. No effect on an LPAR in HCF or Dummy mode.
			• PARM: Specifies a load parameter for auto IPL. No effect on an LPAR in HCF or Dummy mode.

© COMPAREX Informationssysteme GmbH

Definition Item	Field on Frame		Explanation (Sheet 2 of 2)
	LPRDEF	**SLPDEF**	
CPU ID contents for LPAR**	VER/SER#	VER, SER#	• VER: Specifies a two-digit version code in the logical CPU ID for an LPAR in ESA mode. No effect on an LPAR in HCF or Dummy mode. Alteration is disabled in VSF mode. • SER#: Specifies the serial number (4th thru 8th digits in the logical CPU ID) for an LPAR in ESA mode. No effect on an LPAR in HCF or Dummy mode.

* The total size specified to all LPARs can exceed the value displayed in the “PHYSICAL” field, in which case not all LPARs can be activated a time.
** The same CPU ID contents cannot be specified to multiple LPARs.

© COMPAREX Informationssysteme GmbH

4.3 Definition of LPAR Resources

4.3.1 LPAR Resource Definition Overview

The LPRRSC frame defines LPAR resources such as service ratio and time slice value for all LPARs. As an alternative, the SLPDEF frame can define the same items for a specific LPAR. Figures 4-3 thru 4-4 illustrate the respective definition images on the LPRRSC and SLPDEF frames by processor model. An underlined part denotes an input area to which a definition parameter is entered. Bold letters denote information relevant to the definition operation. Details of the definition operation in each field are given in Table 4-3.

Note: *Allocation of MS and ES must follow specific rules as detailed in section 4.3.2. Section 4.3.3 provides a guide to the service ratio definition.*

© COMPAREX Informationssysteme GmbH

```
         1         2         3         4         5         6         7         8
12345678901234567890123456789012345678901234567890123456789012345678901234567890
 1 LPAR  1 : LPAR0001  LPAR RESOURCE DEFINITION       (LPRRSC) YY/MM/DD HH:MM:SS
 2 SCDS    : A0
 3 L-LPAR       MODE S  SRV TIM  USG%        MSO  MSE  MSR    ESO    ESE    ESR
 4   1 LPAR0001 ESA  A  150   3  22.5          0  256    0      0    512      0
 5   2 LPAR0002 ESA  A  350   3  23.3        256  256    0             0      0
 6   3 LPAR0003 HCF  A  250   3  16.6        512  256    0             0      0
 7   4 LPAR0004 ESA  A  250   3  37.5        768  256    0    512    512      0
 8   5 LPAR0005 ESA  D   50  50 *****              0    0             0      0
 9   6 LPAR0006 ESA  D   50  50 *****              0    0             0      0
10   7 LPAR0007 ESA  D   50  50 *****              0    0             0      0
11   8 LPAR0008 DMY  D   50  50 *****              0    0             0      0
12   9 LPAR0009 ESA  D   50  50 *****             32    0             0      0
13  10 LPAR0010 ESA  D   50  50 *****             32    0             0      0
14
15                              PHYSICAL  :      1024              1024
16                              MAX ADDR  :      2048              2048
17                              DEFINED   :      1024              1024
18                              ACTIVATED :      1024              1024
19 F-FUNCTION                   REMAINING :         0                 0
20  1-DEFINE/L                  UNIT      :        16                16
21  2-SAVE                      REMAINING HSA :     8(MB)
22
```

```
         1         2         3         4         5         6         7         8
12345678901234567890123456789012345678901234567890123456789012345678901234567890
 1 LPAR  1 : LPAR0001  LPAR DEFINITION ASSORTED       (SLPDEF) YY/MM/DD HH:MM:SS
 2 SCDS    : A0
 3  STATUS : A  PIP : 11  LIP :  4  CH :  64  USG% :  22.5
 4 D-CONFIGURATION DEFINITION
 5    MODE : ESA  A : A    AP :  1
 6       F : N   IP : 0  DEV# : 0640  PARM :           VER : 8A  SER# : 10001
 7 I-IP DEFINITION
 8                    <DEDICATED>  < SHARED  >
 9                    <INI> <RSV>  <INI> <RSV>  PIP ALT
10           SUM                                GRP IP
11   LOGICAL  6        0  2  0  0   3  0  1  0       N
12 R-RESOURCE DEFINITION
13    SRV : 150   TIM :   3
14    MSO :     0 MSE :  256 MSR :    0 ESO :      0 ESE :    512 ESR :      0
15 T-CONTROL DEFINITION
16    WC : Y  RC : Y  IO : N  RF : Y  IS : N  PR : N  XL : Y  AD : N  MF : Y
17    TM : Y  TW : N  BR : N  MD : Y  PL : Y  PX : Y
18 F-FUNCTION              Z-LPAR FRAME INDEX (LPRIDX)
19  2-SAVE                 Z+FUNCTION CODE ON LPRIDX
20  3-ACTIVATE/SL           -DIRECT LPAR FRAME CALL
21  4-DEACTIVATE/SL
22
```

Figure 4-3 Definition of LPAR Resources on C2000-xxA, C2000-xxB, and C2000-xxC

Note: *The display images denote C2000-A2A in non-VSF mode with one IntCF IP by the number of IPs, version code, and certain field settings. These parameters vary with processor configurations.*

© COMPAREX Informationssysteme GmbH

```
         1         2         3         4         5         6         7         8
12345678901234567890123456789012345678901234567890123456789012345678901234567890
 LPAR  1 : HCF1      LPAR RESOURCE DEFINITION       (LPRRSC) YY/MM/DD HH:MM:SS
SCDS    : A0
L-LPAR       MODE S  SRV TIM  USG%        MSO  MSE  MSR    ESO    ESE    ESR
  1 HCF1     HCF  A  150   3  22.5          0  256    0      0    512      0
  2 HCF2     HCF  A  350   3  23.3        256  256    0             0      0
  3 HCF3     HCF  A  250   3  16.6        512  256    0             0      0
  4 HCF4     HCF  A  250   3  37.5        768  256    0    512    512      0
  5 HCF5     HCF  D   50  50 *****              0    0             0      0
  6 HCF6     HCF  D   50  50 *****              0    0             0      0
  7 HCF7     HCF  D   50  50 *****              0    0             0      0
  8 HCF8     HCF  D   50  50 *****              0    0             0      0
  9 HCF9     HCF  D   50  50 *****             32    0             0      0
 10 HCF10    HCF  D   50  50 *****             32    0             0      0

                            PHYSICAL  :      1024              1024
                            MAX ADDR  :      2048              2048
                            DEFINED   :      1024              1024
                            ACTIVATED :      1024              1024
F-FUNCTION                  REMAINING :         0                 0
 1-DEFINE/L                 UNIT      :        16                16
 2-SAVE                     REMAINING HSA :     8(MB)
```

```
         1         2         3         4         5         6         7         8
12345678901234567890123456789012345678901234567890123456789012345678901234567890
LPAR  1 : HCF1      LPAR DEFINITION ASSORTED       (SLPDEF) YY/MM/DD HH:MM:SS
SCDS    : A0
 STATUS : A  PIP : 11  LIP :  4  CH :   8  USG% :  22.5
D-CONFIGURATION DEFINITION
   MODE : HCF  A : A    AP :  1
      F : N   IP : 0  DEV# : 0000  PARM :           VER : 80  SER# : 10000
I-IP DEFINITION
                   <DEDICATED>  < SHARED  >
                   <INI> <RSV>  <INI> <RSV>  PIP ALT
          SUM                                GRP IP
  LOGICAL  6        5     1      0     0          Y
R-RESOURCE DEFINITION
   SRV : 150   TIM :   3
   MSO :     0 MSE :  256 MSR :    0 ESO :      0 ESE :    512 ESR :      0
T-CONTROL DEFINITION
   WC : Y  RC : Y  IO : N  RF : Y  IS : N  PR : N  XL : Y  AD : N  MF : Y
                   BR : N  MD : Y  PL : N  PX : Y
F-FUNCTION              Z-LPAR FRAME INDEX (LPRIDX)
 2-SAVE                 Z+FUNCTION CODE ON LPRIDX
 3-ACTIVATE/SL           -DIRECT LPAR FRAME CALL
 4-DEACTIVATE/SL
```

Figure 4-4 Definition of LPAR Resources on CF2000-0xA

Note: *The lower display image denotes CF2000-0xA by the number of IPs and version code. These parameters vary with processor configurations.*

© COMPAREX Informationssysteme GmbH

Table 4-3 Operation Details for Definition of LPAR Resources

Definition Item	Field on Frame		Explanation
	LPRRSC	**SLPDEF**	
Service ratio	SRV	SRV	Specifies a ratio with which the target LPAR is serviced. Each service ratio can be specified from 1 thru 999 as a relative value.
Time slice value	TIM	TIM	Specifies a unit time slice value for the shared-mode IP resource in each LPAR within the range of 1 ms to 100 ms (absolute value). Not applicable to dedicated-mode IP resource, to which the system-defined fixed value of 500 ms applies.
Resource usage ratio (display only)	USG%	USG%	Displays ratio-of-use of physical IP allocated to the target LPAR. The ratio is represented in percent (max. 100).
MS origin	MSO	MSO	Specifies the MS origin allocated to the target LPAR. The value should be in MB on the boundary of model-dependent unit size (in Real MS Capacity Expansion mode) or 1 MB (otherwise). No effect on an LPAR in Dummy mode.
MS extent	MSE	MSE	Specifies the MS size allocated to the target LPAR. The value should be in MB on the boundary of model-dependent unit size (in Real MS Capacity Expansion mode) or 1 MB (otherwise). No effect on an LPAR in Dummy mode.
Reserved MS size	MSR	MSR	Specifies an MS size to be reserved for (and allocated to) the target LPAR. The value should be in MB on the boundary of model-dependent unit size (in Real MS Capacity Expansion mode) or 1 MB (otherwise). No effect on an LPAR in Dummy mode.
ES origin	ESO	ESO	Specifies the ES origin allocated to the target LPAR. The value should be in MB on the boundary of model-dependent unit size (in Real MS Capacity Expansion mode) or 1 MB (otherwise). No effect on an LPAR in Dummy mode.
ES extent	ESE	ESE	Specifies the ES size allocated to the target LPAR. The value should be in MB on the boundary of model-dependent unit size (in Real MS Capacity Expansion mode) or 1 MB (otherwise). No effect on an LPAR in Dummy mode.
Reserved ES size	ESR	ESR	Specifies an ES size to be reserved for (and allocated to) the target LPAR. The value should be in MB on the boundary of model-dependent unit size (in Real MS Capacity Expansion mode) or 1 MB (otherwise). Not available to an LPAR in Dummy mode.
Summary of MS and ES allocation (display only)	PHYSICAL	—	Displays physical MS (excluding Hypervisor-allocated block) and ES sizes (in MB).
	MAX ADDR	—	Displays absolute MS and ES sizes (in MB).
	DEFINED	—	Displays the total size (in MB) of MS and ES allocated to LPARs.
	ACTIVATED	—	Displays the total size (in MB) of MS and ES allocated to the activated LPARs.
	REMAINING	—	Displays the difference (in MB) between the total size of MS and ES which are physically installed and the total size of MS and ES allocated to the activated LPARs.
	UNIT	—	Displays the model-dependent unit size (in MB) of MS and ES in Real MS Capacity Expansion mode; otherwise, 1 MB.
	REMAINING HSA	—	Displays the size of unused HSA in MB. Displayed only when total MS size is more than 2GB.

© COMPAREX Informationssysteme GmbH

4.3.2 Rules for Allocation of MS and ES at LPAR Activation

Allocation of MS and ES at LPAR activation conforms to specific rules as shown below.

Rules for MS/ES allocation in Real MS Capacity Expansion mode

When no MS/ES origin (MSO/ESO) is specified on the LPRRSC frame, each LPAR allocates a contiguous MS/ES area out of a free logical (= physical) MS/ES area starting from the highest available MS/ES address. This free area is defined by the size of the specified MS/ES extent (MSE/ESE) and may overlap with an unused Reserved MS/ES area (MSR/ESR) of any other activated LPAR. When no adequate free area exists, the LPAR activation will fail.

When an MSO/ESO value is specified on the LPRRSC frame, each LPAR allocates a contiguous area out of a free logical (= physical) MS/ES area by the size of the specified MSE/ESE starting from the address specified by the said MSO/ESO. This free area may overlap with an unused MSR/ESR of any other activated LPAR. When an MSR/ESR has been specified, such MSR/ESR may overlap with the following of any other activated LPAR, as long as the specified MSR/ESR does not exceed a logical maximum of the MS/ES sizes: MSE/ESE and MSR/ESR. When no adequate free area exists, or when the specified MSR/ESR exceeds a logical maximum of the MS/ES sizes, the LPAR activation will fail.

Rules for MS/ES allocation not in Real MS Capacity Expansion mode

When no MS/ES origin (MSO/ESO) is specified on the LPRRSC frame, each LPAR allocates a contiguous MS/ES area out of a free logical (≠ physical) MS/ES area starting from the highest available MS/ES address. This free area is defined by the total size of the specified MS/ES extent (MSE/ESE) and Reserved MS/ES area (MSR/ESR), and must not overlap with an unused MSR/ESR of any other activated LPAR. When no adequate free area exists, the LPAR activation will fail.

When an MSO/ESO value is specified on the LPRRSC frame, each LPAR allocates a contiguous area out of a free logical (≠ physical) MS/ES area by the size of the specified MSE/ESE starting from the address specified by the said MSO/ESO. This free area must not overlap with an unused MSR/ESR of any other activated and MSO/ESO-defined LPAR. When an MSR/ESR has been specified, such MSR/ESR may overlap with the following of any other activated and MSO/ESO-defined LPAR, as long as the specified MSR/ESR does not exceed a logical maximum of the MS/ES sizes: MSE/ESE and MSR/ESR. When no adequate free area exists, or when the specified MSR/ESR exceeds a logical maximum of the MS/ES sizes, the LPAR activation will fail.

Note *on failing activation of MSO/ESO-defined LPAR: Activation of an MSO/ESO-defined LPAR, normally completed in MLPF 3.3.0 or below, may fail in MLPF 3.3.3 or above. In such a case, clear the value of MSO/ESO on the LPRRSC frame first, and then activate the LPAR again.*

4.3.3 Guide to Service Ratio Definition

This section provides a guide to the service ratio definition—specifically, how to obtain various usage ratios from a given service ratio.

Calculation Method of CPU Resource Usage Ratios

Each service ratio defined by the LPRRSC, LPRIPN, or SLPDEF frame controls the ratio of service with which an entity of the shared-mode logical IPs in the target LPAR can utilize an entity of the shared-mode physical IPs. The service ratio has no effect on any dedicated-mode logical IP.

Except on the CF2000-0xA Models, the entire physical IP resource (or “CPU resource”) available in the whole system usually consists of the “shared-mode CPU resource” and the “dedicated-mode CPU resource.” The shared-mode CPU resource means an entity of the physical IPs in shared mode in the whole system, whereas the dedicated-mode CPU resource means an entity of the physical IPs in dedicated mode in the whole system. In addition, an aggregate percentage of shared-mode and dedicated-mode CPU resources scheduled to each LPAR relative to the whole system’s CPU resource is called the LPAR’s “CPU resource usage ratio.”

Figure 4-5 illustrates how the CPU resource usage ratios are calculated, taking the case of three activated LPARs utilizing seven physical IPs as an example. Description of the calculation formula follows.

© COMPAREX Informationssysteme GmbH

```
LPAR  1 : LPAR0001  LPAR IP NUMERIC DEFINITION     (LPRIPN) YY/MM/DD HH:MM:SS
SCDS    : A0
                             <DEDICATED>  < SHARED  >
                             <INI> <RSV>  <INI> <RSV>  PIP ALT
L-LPAR       MODE ST SUM                              GRP IP  SRV USG%
  1 LPAR1    ESA  A   5        1     0      4     0          N  100 23.8
  2 LPAR2    ESA  A   6        2     0      4     0          N  200 47.6
  3 LPAR3    ESA  A   4        0     1      4     0          N  300 28.5
  :
               P-PHYSICAL IP  0  1  2  3  4  5  6
  :
  :             MODE          D  D  D  S  S  S  S
  :
```

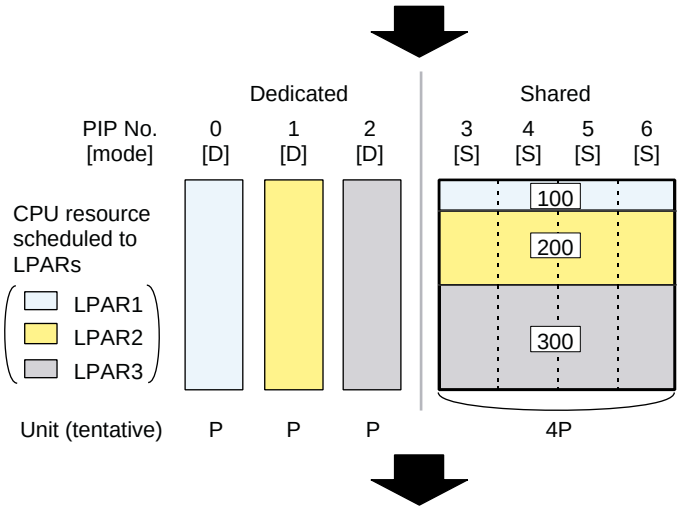

LPAR Name	Dedicated-mode CPU Resource	Shared-mode CPU Resource	CPU Resource Usage Ratio %
LPAR1	P	4P x 100 / 600	(P + 4P x 100 / 600) x 100 / 7P
LPAR2	2P	4P x 200 / 600	(2P + 4P x 200 / 600) x 100 / 7P
LPAR3	0	4P x 300 / 600	(0 + 4P x 300 / 600) x 100 / 7P

Figure 4-5 Calculation of CPU Resource Usage Ratio

The CPU resource usage ratio is actually obtained by the steps shown below, where the CPU resource unit “P” mentioned in the previous example is modified so as to attain precise and flexible control). Table 4-4 provides sample calculations of the CPU resource usage ratios, where it should be noted that the total CPU resource usage ratio is not necessarily equal to 100.0 %.

1. Find the following values. To be simple, LPARi ($1 \le i \le n$) is assumed activated.
   - Wi: Service ratio of LPARi.
   - Di Number of dedicated-mode logical IPs scheduled to LPARi.
   - Si: Number of shared-mode logical IPs scheduled to LPARi.
   - DP: Number of dedicated-mode physical IPs in the entire system.
   - SP: Number of shared-mode physical IPs in the entire system.
   - Pc: Theoretical CPU resource unit (constant). Fixed to 10^6 in decimal.

© COMPAREX Informationssysteme GmbH

2. Calculate Pv and Qi, and obtain Ui (the target), each representing the following:
   - Pv: Practical CPU resource unit (variant).
   - Qi: Shared-mode CPU resource of LPARi.
   - Ui: CPU resource usage ratio of LPARi in percentage.

   a) Calculate Pv and Qi from the substeps below.

      1) For LPARs of Si ≠ 0, calculate the temporary variant W from W = ΣWi. If W = 0, then Pv = Pc = 10^6 and Qi = 0.

      2) If W ≠ 0, calculate the temporary variant Ri for each LPAR of Si ≠ 0 from Ri = Pc × Wi / W. Omit figures below the decimal point. Then calculate Pv from Pv = ΣRi and Qi from Qi = SP × Ri.

   b) Obtain Ui from Ui = (Di × Pv + Qi) × 100 / {(DP + SP) × Pv}. Omit figures in and below the second place of decimals.

Table 4-4 Sample Calculations of CPU Resource Usage Ratios

LPAR Name	Wi	All-Shared Case (Pv = 999999)					Partly-Shared Case (Pv = 999999)				
		Di	Di x Pv	Si	Qi	Ui	Di	Di x Pv	Si	Qi	Ui
LPAR1	100	0	0	4	470588	11.7	0	0	3	352941	8.8
LPAR2	250	0	0	4	1176468	29.4	0	0	3	882351	22.0
LPAR3	300	0	0	4	1411764	35.2	1	999999	3	1058823	51.4
LPAR4	200	0	0	4	941176	23.5	0	0	3	705882	17.6
Total	850	0	0	16	3999996	99.8	1	999999	12	2999997	99.8

Autoadjustment at Fractional CPU Resource in Shared Mode

When any LPAR's shared-mode CPU resource per shared-mode logical IP (= "Qi" divided by "Si") turns out to be less than 1% of the practical CPU resource unit (= "Pv"), MLPF performs autoadjustment to avoid performance degradation of shared-mode logical IPs.

In this process, MLPF automatically raises the said usage to 1% and fine-tunes the entire CPU resource usages. The increment is taken from the other LPARs' shared-mode CPU resources according to their service ratios. Table 4-5 exemplifies this type of autoadjustment. The following explains a few tricks:

- "Qi before Adjustment" column provides the calculation results. Pv obtained in this example is 999998.Then, Q1 (10636) divided by S1 (4) is 2659, which turns out to be less than 1 % of Pv.
- To raise the above-mentioned usage to 1%, the increment 29364—calculated from ⌈S1 × Pv × 0.01⌉ - Q1—is added to Q1, resulting in 40000.
- The increment 29364 is taken from Q2, Q3, and Q4 proportionally with the service ratios W2, W3, and W4. Hence, the reductions are calculated as 29364 × 250 / 750, 29364 × 300 / 750, and 29364 × 200 / 750.

Note: *⌈x⌉ represents the ceiling of x, i.e., the nearest upward integer of x.*

Table 4-5 Sample Adjustment at Fractional Use of Shared-Mode CPU Resource

LPAR Name	Wi	Di	Di x Pv	Si	Qi before Adjustment	Value for Adjustment	Qi after Adjustment	Ui
LPAR1	2	0	0	4	10636	29364	40000	1.0
LPAR2	250	0	0	4	1329784	-9787	1319997	32.9
LPAR3	300	0	0	4	1595744	-11748	1583996	39.5
LPAR4	200	0	0	4	1063828	-7831	1055997	26.3
Total	752	0	0	16	3999992	-2	3999990	99.7

© COMPAREX Informationssysteme GmbH

Autoadjustment at Excessive CPU Resource in Shared Mode

When any LPAR's shared-mode CPU resource per shared-mode logical IP (= "Qi" divided by "Si") turns out to be greater than the practical CPU resource unit (= "Pv"), MLPF performs autoadjustment to accomplish an effective use of shared-mode physical IPs.

In this process, MLPF automatically lowers the said usage to Pv and fine-tunes the entire CPU resource usages. The decrement is given to the other LPARs' shared-mode CPU resources according to their service ratios. If there is no other LPAR utilizing shared-mode CPU resource, such decrement is discarded. Table 4-6 exemplifies this type of autoadjustment. The following explains a few tricks:

- "Qi before Adjustment" column provides the calculation results. Pv obtained in this example is 999999. Then, Q2 (1176468) divided by S2 (1) is 1176468, which turns out to be greater than Pv.
- To lower the above-mentioned usage to Pv, the decrement 176469—calculated from Q2 – S2 × Pv—is subtracted from Q2, resulting in 999999.
- The decrement 176469 is given to Q1, Q3, and Q4 proportionally with the service ratios W1, W3, and W4. Hence, the additions are calculated as 176469 × 100 / 850, 176469 × 300 / 850, and 176469 × 200 / 850.

Table 4-6 Sample Adjustment at Excessive Use of Shared-Mode CPU Resource

LPAR Name	Wi	Di	Di x Pv	Si	Qi before Adjustment	Value for Adjustment	Qi after Adjustment	Ui
LPAR1	100	0	0	4	470588	29411	499999	12.4
LPAR2	250	0	0	1	1176468	-176469	999999	25.0
LPAR3	300	0	0	4	1411764	88234	1499998	37.4
LPAR4	200	0	0	4	941176	58823	999999	25.0
Total	850	0	0	13	3999996	-1	3999995	99.8

Autoadjustment with PIPGSF at Excessive CPU Resource in Shared Mode

When the total amount of shared-mode CPU resources of LPARs belonging to a PIP group turns out to be greater than the summation of practical CPU resource units of the same group, MLPF automatically adjusts the shared-mode CPU resource usage ratios of all LPARs belonging to that group.

In this process, MLPF automatically lowers the said total amount of shared-mode CPU resources to the summation of practical CPU resource units of the same group. The decrement is taken from the shared-mode CPU resources of the subject LPARs and given to the shared-mode CPU resources of PIPGSF-disabled LPARs, both according to the service ratios. If there is no shared-mode CPU resource in the PIPGSF-disabled LPARs, the decrement is not redistributed. Table 4-7 exemplifies this type of autoadjustment. The following explains a few tricks:

- "Qi before Adjustment" column provides the calculation results. Pv obtained in this example is 999999. Then, the total of Q2 and Q3 (1176468 + 1411764 = 2588232) belonging to PIP Group 5 turns out to be greater than Pv multiplied by the number of applicable PIPs (999999 × 2 = 1999998).
- To lower the total of Q2 and Q3 to 1999998, the decrement 588234 is subtracted from Q2 and Q3 proportionally with their service ratios. Such decrement is calculated from the formula Q – N × Pv, where Q with no suffix means the total amount of shared-mode CPU resources owned by LPARs in the subject PIP group, and N means the number of shared-mode PIPs belonging to the same PIP group.
- The decrement 588234 is given to the shared-mode CPU resource of PIPGSF-disabled LPARs proportionally with their service ratios. In this example, LPAR1 is only such LPAR and hence the whole decrement is added to Q1.

© COMPAREX Informationssysteme GmbH

Table 4-7 Sample Adjustment at Excessive Shared-Mode CPU Resource with PIPGSF

LPAR Name	PIP Grp	Wi	Di	Di x Pv	Si	Qi before Adjustment	Value for Adjustment	Qi after Adjustment	Ui	PIP #	PIP Grp
LPAR1	–	100	0	0	4	470588	588234	1058822	26.4	0	–
LPAR2	5	250	0	0	2	1176468	-267378	909090	22.7	1	5
LPAR3	5	300	0	0	2	1411764	-320856	1090908	27.2	2	5
LPAR4	2	200	0	0	1	941176	0	941176	23.5	3	2
Total	–	850	0	0	9	3999996	0	3999996	99.8		

Pitfall in Autoadjustment with PIPGSF and Recommended Solution

Scheduling of shared-mode CPU resources to all LPARs always takes place prior to autoadjustment of shared-mode CPU resources among PIPGSF-enabled LPARs. Hence, if every LPAR has been scheduled to a certain PIP group, there may be cases when the entire CPU resources are not fully utilized. In the upper example of Table 4-8, Q2 and Q3 in PIP Group 5 are autoadjusted because their summation exceeds the result of multiplying Pv (999999) by the number of applicable PIPs (2). The decrement, however, is discarded since there is no PIPGSF-disabled LPAR.

Note: *In actual environment with this example, most of the decrement is redistributed to LPAR1 and LPAR4 as long as Resource Capping is disabled on these LPARs.*

To avoid the case, it is recommended to define service ratios as “Wg1 : Wg2 : … WgF = Pg1 : Pg2 : … PgF” (Wgi, the sum of LPAR service ratios in PIP Group i and Pgi, the total number of physical IPs in PIP Group i) shown in the lower part of Table 4-8.

As demonstrated herein, CPU resource usage ratios are determined by service ratios, and a service ratio change in one PIP group may sometimes affect other PIP groups. Every such change should therefore ensure resulting CPU usage ratios of all LPARs.

Table 4-8 Sample Pitfall and Solution in Autoadjustment with PIPGSF

LPAR Name	PIP Grp	Wi	Di	Di x Pv	Si	Qi before Adjustment	Value for Adjustment	Qi after Adjustment	Ui	PIP #	PIP Grp
LPAR1	2	100	0	0	3	588235	0	588235	11.7	0	2
LPAR2	5	250	0	0	2	1470585	-561495	909090	18.1	1	5
LPAR3	5	300	0	0	2	1764705	-673797	1090908	21.8	2	2
LPAR4	2	200	0	0	3	1176470	0	1176470	23.5	3	5
Total	–	850	0	0	10	4999995	-1235292	3764703	75.1	4	2

LPAR Name	PIP Grp	Wi	Di	Di x Pv	Si	Qi before Adjustment	Value for Adjustment	Qi after Adjustment	Ui	PIP #	PIP Grp
LPAR1	2	110	0	0	3	1000000	-1	999999	19.9	0	2
LPAR2	5	100	0	0	2	909090	0	909090	18.1	1	5
LPAR3	5	120	0	0	2	1090905	0	1090905	21.8	2	2
LPAR4	2	220	0	0	3	2000000	-2	1999998	39.9	3	5
Total	–	550	0	0	10	4999995	-3	4999992	99.7	4	2

© COMPAREX Informationssysteme GmbH

4.4 Definition of LPAR Control Items

The LPRCTL frame defines LPAR control items—Wait Completion, Resource Capping, SCDS Access Enable, RMF, Isolate, Protected LPAR, Dynamic LPAR Reconfiguration, ADMF, ICMF, Time Machine, Time Warp, Alarm Bell, MDC Enable (option), Policy Diagnose, and PMC command—for all LPARs. As an alternative, the SLPDEF frame can define the same items for a specific LPAR. Figures 4-6 thru 4-7 illustrate the respective definition images on the LPRCTL and SLPDEF frames by processor model. An underlined part denotes an input area to which a definition parameter is entered. Bold letters denote information relevant to the definition operation. Details of the definition operation are given in Table 4-9.

Note *on MDC Enable: This function is available ("MD" field displayed and effective) only when the machine-dependent constants (MDC) setting by the system control program is disabled (default) in the system installation setting. Alteration of such system installation setting is not released to the end user and must be conducted by the customer engineer or the field engineer.*

© COMPAREX Informationssysteme GmbH

```
         1         2         3         4         5         6         7         8
12345678901234567890123456789012345678901234567890123456789012345678901234567890
 1 LPAR  1 : LPAR0001  LPAR CONTROL DEFINITION        (LPRCTL) YY/MM/DD HH:MM:SS
 2 SCDS    : A0
 3 L-LPAR       MODE S  WC RC   IO RF IS PR XL AD MF TM TW BR MD PL PX
 4   1 LPAR0001 ESA  A  Y  Y    N  Y  N  N  Y  N  Y  Y  N  N  Y  Y  Y
 5   2 LPAR0002 ESA  D  N  N    N  N  N  Y  N  N  N  N  Y  N  Y  N  Y
 6   3 LPAR0003 HCF  D  N  N    N  N  N  N  N  N  Y  N  N  N  Y  N  Y
 7   4 LPAR0004 ESA  D  N  N    N  N  N  N  N  N  N  N  N  N  Y  N  N
 8   5 LPAR0005 ESA  D  N  N    N  N  N  N  N  N  N  N  N  N  Y  N  N
 9   6 LPAR0006 ESA  D  N  N    N  N  N  N  N  N  N  Y  N  N  Y  N  N
10   7 LPAR0007 ESA  D  N  N    N  N  N  N  N  N  N  Y  Y  N  Y  N  N
11   8 LPAR0008 ESA  D  N  N    N  N  N  N  N  N  N  N  N  N  Y  N  N
12   9 LPAR0009 ESA  D  N  N    Y  N  Y  Y  N  N  N  N  Y  N  Y  N  N
13  10 LPAR0010 DMY  D  N  N    N  N  N  N  N  N  N  N  N  N  N  N  N
14
15
16
17
18
19 F-FUNCTION             Z-LPAR FRAME INDEX (LPRIDX)           LU-LPAR PAGE UP
20  1-DEFINE/L            Z+FUNCTION CODE ON LPRIDX             LD-LPAR PAGE DOWN
21  2-SAVE                 -DIRECT LPAR FRAME CALL
22
```

```
         1         2         3         4         5         6         7         8
12345678901234567890123456789012345678901234567890123456789012345678901234567890
 1 LPAR  1 : LPAR0001  LPAR DEFINITION ASSORTED       (SLPDEF) YY/MM/DD HH:MM:SS
 2 SCDS    : A0
 3  STATUS : A  PIP : 11  LIP :  4  CH :  64  USG% : 100.0
 4 D-CONFIGURATION DEFINITION
 5    MODE : ESA  A : A    AP :  1
 6       F : N   IP : 0  DEV# : 0640  PARM :           VER : 8A  SER# : 10001
 7 I-IP DEFINITION
 8                    <DEDICATED>  < SHARED  >
 9                    <INI> <RSV>  <INI> <RSV>  PIP ALT
10           SUM                                GRP IP
11   LOGICAL  6        0  2  0  0   3  0  1  0       N
12 R-RESOURCE DEFINITION
13    SRV : 100   TIM :  50
14    MSO :       MSE :  256 MSR :    0 ESO :        ESE :    512 ESR :      0
15 T-CONTROL DEFINITION
16    WC : Y  RC : Y  IO : N  RF : Y  IS : N  PR : N  XL : Y  AD : N  MF : Y
17    TM : Y  TW : N  BR : N  MD : Y  PL : Y  PX : Y
18 F-FUNCTION              Z-LPAR FRAME INDEX (LPRIDX)
19  2-SAVE                 Z+FUNCTION CODE ON LPRIDX
20  3-ACTIVATE/SL           -DIRECT LPAR FRAME CALL
21  4-DEACTIVATE/SL
22
```

Figure 4-6 Definition of LPAR Control Items on C2000-xxA, C2000-xxB, and C2000-xxC

Note: *The lower display image denotes C2000-A2A in non-VSF mode with one IntCF IP by the number of IPs, version code, and certain field settings.These parameters vary with processor configurations.*

© COMPAREX Informationssysteme GmbH

```
         1         2         3         4         5         6         7         8
12345678901234567890123456789012345678901234567890123456789012345678901234567890
 1 LPAR  1 : HCF1      LPAR CONTROL DEFINITION        (LPRCTL) YY/MM/DD HH:MM:SS
 2 SCDS    : A0
 3 L-LPAR       MODE S  WC RC   IO RF IS PR XL    MF       BR MD PL PX
 4   1 HCF1     HCF  A  Y  Y    N  Y  N  N  Y     Y        N  Y  N  Y
 5   2 HCF2     HCF  D  N  N    N  N  N  Y  N     N        N  Y  N  Y
 6   3 HCF3     HCF  D  N  N    N  N  N  N  N     Y        N  Y  N  Y
 7   4 HCF4     HCF  D  N  N    N  N  N  N  N     N        N  Y  N  N
 8   5 HCF5     HCF  D  N  N    N  N  N  N  N     N        N  Y  N  N
 9   6 HCF6     HCF  D  N  N    N  N  N  N  N     N        N  Y  N  N
10   7 HCF7     HCF  D  N  N    N  N  N  N  N     N        N  Y  N  N
11   8 HCF8     HCF  D  N  N    N  N  N  N  N     N        N  Y  N  N
12   9 HCF9     HCF  D  N  N    Y  N  Y  Y  N     N        N  Y  N  N
13  10 HCF10    HCF  D  N  N    Y  N  Y  Y  N     N        N  Y  N  N
14
15
16
17
18
19 F-FUNCTION             Z-LPAR FRAME INDEX (LPRIDX)           LU-LPAR PAGE UP
20  1-DEFINE/L            Z+FUNCTION CODE ON LPRIDX             LD-LPAR PAGE DOWN
21  2-SAVE                 -DIRECT LPAR FRAME CALL
22
```

```
         1         2         3         4         5         6         7         8
12345678901234567890123456789012345678901234567890123456789012345678901234567890
 1 LPAR  1 : HCF1      LPAR DEFINITION ASSORTED       (SLPDEF) YY/MM/DD HH:MM:SS
 2 SCDS    : A0
 3  STATUS : A  PIP : 11  LIP :  4  CH :   8  USG% : 100.0
 4 D-CONFIGURATION DEFINITION
 5    MODE : HCF  A : A    AP :  1
 6       F : N   IP : 0  DEV# : 0000  PARM :           VER : 00  SER# : 10000
 7 I-IP DEFINITION
 8                    <DEDICATED>  < SHARED  >
 9                    <INI> <RSV>  <INI> <RSV>  PIP ALT
10           SUM                                GRP IP
11   LOGICAL  6        5     1      0     0          Y
12 R-RESOURCE DEFINITION
13    SRV : 100   TIM :  50
14    MSO :       MSE :  256 MSR :    0 ESO :        ESE :    512 ESR :      0
15 T-CONTROL DEFINITION
16    WC : Y  RC : Y  IO : N  RF : Y  IS : N  PR : N  XL : Y          MF : Y
17                    BR : N  MD : Y  PL : N  PX : Y
18 F-FUNCTION              Z-LPAR FRAME INDEX (LPRIDX)
19  2-SAVE                 Z+FUNCTION CODE ON LPRIDX
20  3-ACTIVATE/SL           -DIRECT LPAR FRAME CALL
21  4-DEACTIVATE/SL
22
```

Figure 4-7 Definition of LPAR Control Items on CF2000-0xA

Note: *The lower display image denotes CF2000-0xA by the number of IPs and version code. These parameters vary with processor configurations.*

© COMPAREX Informationssysteme GmbH

Table 4-9 Operation Details for Definition of LPAR Control Items

Definition Item	Field on Frame		Explanation (Sheet 1 of 2)
	LPRCTL	SLPDEF	
Wait Completion*	WC*	WC*	• Y: Enables Wait Completion function of the LPAR. When a wait event occurs on the current LPAR, control switch to the other LPAR is held pending until all time slice values given to the current LPAR are used up. • N: Disables Wait Completion function of the LPAR. WC=N cannot be specified to an LPAR scheduled by a physical IP in dedicated mode.
Resource Capping	RC	RC	• Y: Enables the Resource Capping function to the LPAR. • N: Disables the Resource Capping function to the LPAR.
SCDS Access Enable*	IO*	IO*	• Y: Enables write/read-access to SCDS and Dynamic I/O Reconfiguration Management (DRM). • N: Disables write/read-access to SCDS, in which case the active SCDS (used at the last SYSIML clear) can be read-accessed, and disables DRM.
RMF*	RF*	RF*	• Y: Causes the Resource Measurement Facility (RMF) and monitor programs running on the target LPAR to collect data of all LPARs. • N: Causes the RMF and monitor programs running on the target LPAR to collect data of this LPAR only.
Isolate†	IS†	IS†	• Y: Inhibits a channel path to be connected to or disconnected from the target LPAR for reconfiguration. • N: Allows a channel path to be connected to or disconnected from the target LPAR for reconfiguration.
Protected LPAR	PR	PR	• Y: Inhibits frame/command operation on the target LPAR (protected). The protected LPAR can be released only by an UNPROT command (LPAR control command). • N: Allows frame/command operation on the target LPAR (not protected).
Dynamic LPAR Reconfiguration*†	XL*†	XL*†	• Y: Enables the Dynamic LPAR Reconfiguration function to the target LPAR. • N: Disables the Dynamic LPAR Reconfiguration function to the target LPAR.
ADMF*†‡	AD*†‡	AD*†‡	• Y: Enables the Asynchronous Data Mover Facility (ADMF) to the target LPAR. • N: Disables the ADMF to the target LPAR.
ICMF*	MF*	MF*	• Y: Enables Integrated Coupling Migration Facility (ICMF) to the target LPAR. • N: Disables ICMF to the target LPAR.
Time Machine*†‡	TM* †‡	TM*†‡	• Y: Enables the Time Machine Facility to the target LPAR. • N: Disables the Time Machine Facility to the target LPAR.
Time Warp*†‡	TW*†‡	TW*†‡	• Y: Enables the Time Warp Facility to the target LPAR. • N: Disables the Time Warp Facility to the target LPAR.
Alarm Bell*†	BR*†	BR*†	• Y: Enables the Alarm Bell function to the target LPAR. This function causes the SVP alarm buzzer to beep when the guest OS loads a disabled wait PSW. • N: Disables the Alarm Bell function to the target LPAR.
MDC Enable*†	MD*†	MD*†	• Y: Enables the OS in the target LPAR to obtain the MDC and MPFACTOR information from the SCP INFO Block of the MLPF Hypervisor. • N: Returns zero for this MD field, allowing the OS in the target LPAR to obtain the MDC and MPFACTOR information from the OS's own software tables.

© COMPAREX Informationssysteme GmbH

Definition Item	Field on Frame		Explanation (Sheet 2 of 2)
	LPRCTL	SLPDEF	
Policy Diagnose*†	PL*†	PL*†	• Y: Allows writing of MLPF Policy with Policy Diagnose instructions to the target LPAR. • N: Inhibits writing of MLPF Policy with Policy Diagnose instructions to the target LPAR.
PMC Command	PX	PX	• Y: Allows editing of PMC commands for MLPF Policy to the target LPAR. • N: Inhibits editing of PMC commands for MLPF Policy to the target LPAR.

* Not effective on an LPAR in Dummy mode (treated as "N").
† Not effective on an LPAR in HCF mode (treated as "N").
‡ Not applicable to CF2000-0xA Models.

© COMPAREX Informationssysteme GmbH

4.5 Definition of Instruction Processors

4.5.1 Definition Operation on Frames

The LPRIPN frame defines Instruction Processors (IPs) for all LPARs, specifically the following:

- Logical IP (LIP) assignment
- Physical IP (PIP) grouping under Physical IP Group Scheduling Facility (PIPGSF)
- Alternate Processor (AP) availability control

MLPF defines the following automatically and dynamically at the LPAR activation:

- PIPs to be assigned to LIPs in dedicated mode
- CPU addresses for LIPs

As an alternative, the SLPDEF frame can define the same items for a specific LPAR.

Figures 4-8 thru 4-10 illustrate the respective definition images on the LPRIPN and SLPDEF frames by processor model. An underlined part denotes an input area to which a definition parameter is entered. Bold letters denote information relevant to the definition operation. Details of operations are given in Table 4-10. Sections 4.5.2 and 4.5.3 further explain the scheduling modes.

© COMPAREX Informationssysteme GmbH

```
         1         2         3         4         5         6         7         8
12345678901234567890123456789012345678901234567890123456789012345678901234567890
 1 LPAR  1 : LPAR0001  LPAR IP NUMERIC DEFINITION     (LPRIPN) YY/MM/DD HH:MM:SS
 2 SCDS    : A0
 3                             <DEDICATED>  < SHARED  >
 4                             <INI> <RSV>  <INI> <RSV>  PIP ALT
 5 L-LPAR       MODE ST SUM ICF=  -  +  -  +   -  +  -  +  GRP IP  SRV USG%
 6   1 LPAR0001 ESA  A   6        0  2  0  0   3  0  1  0       N  100 50.0
 7   2 LPAR0002 ESA  A   3        1  0  0  0   2  0  0  0       N  100 33.3
 8   3 LPAR0003 ESA  A   3        0  0  0  0   3  0  0  0       N  100 16.6
 9   4 LPAR0004 ESA  D   1        1  0  0  0   0  0  0  0       N  100 ****
10   5 LPAR0005 ESA  D   0        0  0  0  0   0  0  0  0       N  100 ****
11   6 LPAR0006 ESA  D   0        0  0  0  0   0  0  0  0       N  100 ****
12   7 LPAR0007 ESA  D   2        0  0  0  0   2  0  0  0       N  100 ****
13   8 LPAR0008 DMY  D   2        0  0  0  0   2  0  0  0       N  100 ****
14   9 LPAR0009 HCF  D   1        0  0  1  0   0  0  0  0       Y  100 ****
15  10 LPAR0010 HCF  D   5        1  0  1  0   3  0  0  0       Y  100 ****
16                                              LU-LPAR PAGE UP  LD-LPAR PAGE DOWN
17                P-PHYSICAL IP  0  1  2  3  4  5  6  7  8  9  A
18 F-FUNCTION      ICF(KSU ID)   0  .  0  .  .  .  .  .  .  .  .
19  1-DEFINE/L     ALTERNATE IP  .  .  .  .  .  .  .  .  .  .  I
20  2-SAVE         MODE          D  D  D  S  S  -  -  S  S  S  D
21                 PIP GROUP
22
```

```
         1         2         3         4         5         6         7         8
12345678901234567890123456789012345678901234567890123456789012345678901234567890
 1 LPAR  1 : LPAR0001  LPAR DEFINITION ASSORTED       (SLPDEF) YY/MM/DD HH:MM:SS
 2 SCDS    : A0
 3  STATUS : A  PIP : 11  LIP :  4  CH :  64  USG% : 100.0
 4 D-CONFIGURATION DEFINITION
 5    MODE : ESA  A : A    AP :  1
 6       F : N   IP : 0  DEV# : 0640  PARM :           VER : 8A  SER# : 10001
 7 I-IP DEFINITION
 8                    <DEDICATED>  < SHARED  >
 9                    <INI> <RSV>  <INI> <RSV>  PIP ALT
10           SUM ICF = -  +  -  +   -  +  -  +  GRP IP
11   LOGICAL  6        0  2  0  0   3  0  1  0       N
12 R-RESOURCE DEFINITION
13    SRV : 100   TIM :  50
14    MSO :       MSE :  256 MSR :    0 ESO :        ESE :    512 ESR :      0
15 T-CONTROL DEFINITION
16    WC : Y  RC : Y  IO : N  RF : Y  IS : N  PR : N  XL : Y  AD : N  MF : Y
17    TM : Y  TW : N  BR : N  MD : Y  PL : Y  PX : Y
18 F-FUNCTION              Z-LPAR FRAME INDEX (LPRIDX)
19  2-SAVE                 Z+FUNCTION CODE ON LPRIDX
20  3-ACTIVATE/SL           -DIRECT LPAR FRAME CALL
21  4-DEACTIVATE/SL
22
```

Figure 4-8 Definition of IPs on C2000-xxA, C2000-xxB, and C2000-xxC in non-VSF Mode

Note: *The display images denote C2000-A2A in non-VSF mode with one IntCF IP by the number of IPs, version code, and certain field settings. These parameters vary with processor configurations.*

© COMPAREX Informationssysteme GmbH

```
         1         2         3         4         5         6         7         8
12345678901234567890123456789012345678901234567890123456789012345678901234567890
 1 LPAR  1 : LPAR0001  LPAR IP NUMERIC DEFINITION     (LPRIPN) YY/MM/DD HH:MM:SS
 2 SCDS    : A0
 3                             <DEDICATED>  < SHARED  >
 4                             <INI> <RSV>  <INI> <RSV>  VS# ALT
 5 L-LPAR       MODE ST SUM ICF=  -  +  -  +   -  +  -  +      IP  SRV USG%
 6   1 LPAR0001 ESA  A   2        0  0  0  0   1  1  1  0   1   N  100 10.0
 7   2 LPAR0002 ESA  A   2        0  0  0  0   1  1  0  0   1   N  100 10.0
 8   3 LPAR0003 ESA  A   4        0  0  0  0   3  1  0  0   2   N  100 10.0
 9   4 LPAR0004 ESA  A   4        0  0  0  0   3  1  0  0   2   N  100 10.0
10   5 LPAR0005 ESA  A   4        0  0  0  0   3  1  0  0   2   N  100 10.0
11   6 LPAR0006 ESA  A   4        0  0  0  0   3  1  0  0   2   N  100 10.0
12   7 LPAR0007 ESA  A   3        0  0  0  0   3  0  0  0   3   N  100 10.0
13   8 LPAR0008 DMY  A   3        0  0  0  0   3  0  0  0   3   N  100 10.0
14   9 LPAR0009 HCF  A   2        0  0  0  0   2  0  0  0   4   Y  100 10.0
15  10 LPAR0010 HCF  A   2        0  0  0  0   2  0  0  0   4   Y  100 10.0
16                                          LU-LPAR PAGE UP  LD-LPAR PAGE DOWN
17               PHYSICAL IP    0  1  2  3  4  5  6  7  8  9  A
18 F-FUNCTION     ICF(KSU ID)   0  .  1  .  .  .  .  .  .  .  .
19  1-DEFINE/L    ALTERNATE IP  .  .  .  .  .  .  .  .  .  .  I
20  2-SAVE        MODE          S  S  S  S  S  S  S  S  S  S  S
21                VS#(PIP GRP#) 1  1  2  2  2  2  3  3  3  4  4
22
```

```
         1         2         3         4         5         6         7         8
12345678901234567890123456789012345678901234567890123456789012345678901234567890
 1  LPAR  1 : LPAR0001  LPAR DEFINITION ASSORTED       (SLPDEF) YY/MM/DD HH:MM:SS
 2 SCDS    : A0
 3  STATUS : A  PIP : 11  LIP :  4  CH :  64  USG% : 100.0
 4 D-CONFIGURATION DEFINITION
 5    MODE : ESA  A : A    AP :  1
 6       F : N   IP : 0  DEV# : 0640  PARM :           VER : 8A  SER# : 10001
 7 I-IP DEFINITION
 8                   <DEDICATED>  < SHARED  >
 9                   <INI> <RSV>  <INI> <RSV>  VS# ALT
10           SUM ICF = -  +  -  +   -  +  -  +      IP
11   LOGICAL  2        0  0  0  0   1  1  1  0   1   N
12 R-RESOURCE DEFINITION
13    SRV : 100   TIM :  50
14    MSO :       MSE :  256 MSR :    0 ESO :        ESE :    512 ESR :      0
15 T-CONTROL DEFINITION
16    WC : Y  RC : Y  IO : N  RF : Y  IS : N  PR : N  XL : Y  AD : N  MF : Y
17    TM : Y  TW : N  BR : N  MD : Y  PL : Y  PX : Y
18 F-FUNCTION              Z-LPAR FRAME INDEX (LPRIDX)
19  2-SAVE                 Z+FUNCTION CODE ON LPRIDX
20  3-ACTIVATE/SL           -DIRECT LPAR FRAME CALL
21  4-DEACTIVATE/SL
22
```

Figure 4-9 Definition of IPs on C2000-xxA, C2000-xxB, and C2000-xxC in VSF Mode

Note: *The display images denote C2000-A2A in VSF mode with one IntCF IP by the number of IPs, version code, and certain field settings. These parameters vary with processor configurations.*

© COMPAREX Informationssysteme GmbH

```
         1         2         3         4         5         6         7         8
12345678901234567890123456789012345678901234567890123456789012345678901234567890
 1 LPAR  1 : LPAR0001  LPAR IP NUMERIC DEFINITION     (LPRIPN) YY/MM/DD HH:MM:SS
 2 SCDS    : A0
 3                             <DEDICATED>  < SHARED  >
 4                             <INI> <RSV>  <INI> <RSV>  PIP ALT
 5 L-LPAR       MODE ST SUM                              GRP IP  SRV USG%
 6   1 HCF1     HCF  A   6        5     1      0     0          Y  100 41.6
 7   2 HCF2     HCF  A   4        3     1      0     0          Y  100 25.0
 8   3 HCF3     HCF  A   2        1     1      0     0          Y  100  8.3
 9   4 HCF4     HCF  D   0        0     0      0     0          Y  100 ****
10   5 HCF5     HCF  D   0        0     0      0     0          Y  100 ****
11   6 HCF6     HCF  D   0        0     0      0     0          Y  100 ****
12   7 HCF7     HCF  D   2        2     0      0     0          Y  100 ****
13   8 HCF8     HCF  D   2        2     0      0     0          Y  100 ****
14   9 HCF9     HCF  D   0        0     0      0     0          Y  100 ****
15  10 HCF10    HCF  D   0        0     0      0     0          Y  100 ****
16                                          LU-LPAR PAGE UP  LD-LPAR PAGE DOWN
17                P-PHYSICAL IP  0  1  2  3  4  5  6  7  8  9  A  B
18 F-FUNCTION
19  1-DEFINE/L     ALTERNATE IP  I  I  I  I  I  I  I  I  I  I  I  I
20  2-SAVE         MODE          D  D  D  D  D  D  D  D  D  D  D  D
21                 PIP GROUP
22
```

```
         1         2         3         4         5         6         7         8
12345678901234567890123456789012345678901234567890123456789012345678901234567890
 1 LPAR  1 : HCF1      LPAR DEFINITION ASSORTED       (SLPDEF) YY/MM/DD HH:MM:SS
 2 SCDS    : A0
 3  STATUS : A  PIP : 11  LIP :  4  CH :   8  USG% : 100.0
 4 D-CONFIGURATION DEFINITION
 5    MODE : HCF  A : A    AP :  1
 6       F : N   IP : 0  DEV# : 0000  PARM :           VER : 80  SER# : 10000
 7 I-IP DEFINITION
 8                    <DEDICATED>  < SHARED  >
 9                    <INI> <RSV>  <INI> <RSV>  PIP ALT
10           SUM                                GRP IP
11   LOGICAL  6        5     1      0     0          Y
12 R-RESOURCE DEFINITION
13    SRV : 100   TIM :  50
14    MSO :       MSE :  256 MSR :    0 ESO :        ESE :    512 ESR :      0
15 T-CONTROL DEFINITION
16    WC : Y  RC : Y  IO : N  RF : Y  IS : N  PR : N  XL : Y          MF : Y
17                    BR : N  MD : Y  PL : N  PX : Y
18 F-FUNCTION              Z-LPAR FRAME INDEX (LPRIDX)
19  2-SAVE                 Z+FUNCTION CODE ON LPRIDX
20  3-ACTIVATE/SL           -DIRECT LPAR FRAME CALL
21  4-DEACTIVATE/SL
22
```

Figure 4-10 Definition of IPs on CF2000-0xA

Note: *The display images denote CF2000-0xA by the number of IPs and version code. These parameters vary with processor configurations.*

© COMPAREX Informationssysteme GmbH

Table 4-10 Operation Details for Definition of Instruction Processors

Definition Item	Field on Frame		Explanation
	LPRIPN	**SLPDEF**	
Logical IP count by mode	One-letter input fields for each LPAR	One-letter input fields for each LPAR	• Defines the numbers of logical IPs (LIPs) for a deactivated LPAR within the range of 0 to F. • <DEDICATED> and <SHARED>: Dedicated mode and shared mode. • <INI> and <RSV>: Initial mode and reserved mode. A logical IP in initial mode is installed to an LPAR and onlined at activation. A logical IP in reserved mode is installed to an LPAR at activation, but not onlined. • ICF = - and +: "-" (ICF unavailable) or "+" (ICF available). Not displayed when ICF is not installed on the system.
Physical IP group sched-uling or Virtual Server number to LPAR	PIP GRP or VS#	PIP GRP or VS#	In non-VSF mode, defines the physical IP (PIP) scheduling group to an activated LPAR within the range of 1 to F or space (undefined). In VSF mode, defines the Virtual Server number to a deactivated LPAR within the range of 1 to F.
Alternate Processor availability	ALT IP	ALT IP	Defines the availability of Alternate Processors (APs) to be assigned to LIPs in dedicated mode prior to IPs for the target LPAR. Displayed only when IntCF is supported. Effective only on an LPAR in HCF mode. • Y: Allows assignment of APs to LIPs in dedicated mode prior to IPs. • N: Inhibits the assignment of APs.
Service ratio	SRV	—	Defines the service ratio (1 through 999) of the physical IP resource in shared mode by all logical IPs in shared mode of each LPAR. This is the relative ratio among LPARs having logical IPs in shared mode.
Physical IP group scheduling to physical IP	PIP GROUP	—	Defines the physical IP (PIP) scheduling group to each physical IP within the range of 1 to F or space (undefined). Not available in VSF mode.

4.5.2 Scheduling Matrix between Physical and Logical IPs

With PIPGSF disabled

A scheduling matrix between physical and logical IPs and the CPU address for each logical IP will be automatically determined by parameters specified on the frame at the LPAR activation. Table 4-11 shows a scheduling matrix between physical and logical IPs, taking the case of Figure 4-8 as an example (unassigned LPARs and IP8 thru IPA omitted). Figure 4-11 illustrates the scheduling given in Table 4-11.

To a physical IP in shared mode, any logical IP in shared mode can be assigned. Among LPARs assigned to shared physical IPs, processing is switched from one LPAR to another when service time for the LPAR in process has reached a specified time-slice value or a wait PSW has been loaded. On the other hand, an LPAR assigned to a dedicated-mode physical IP is not subject to processing switching and can continue to be serviced. Hence, such an LPAR can operate with smaller overhead and provide greater performance, especially in environments with many I/O interrupts.

Table 4-11 Scheduling Matrix between PIPs and LIPs with PIPGSF Disabled

Category		**Onlined**		**CPU Address [Scheduling Mode] (D: Dedicated, S: Shared, -: Offlined)**							
		D	**S**								
Physical IP (PIP)		3	3	0 [D]	1 [D]	2 [D]	3 [S]	4 [S]	5 [—]	6 [—]	7 [S]
Logical IP (LIP) assigned to LPAR	LPAR0001	2	3	[D]	[D]	—	[S]	[S]	[S]	—	
	LPAR0002	1	2	—		[D]	[S]	[S]	—		
	LPAR0003	0	3	—			[S]	[S]	[S]	—	

© COMPAREX Informationssysteme GmbH

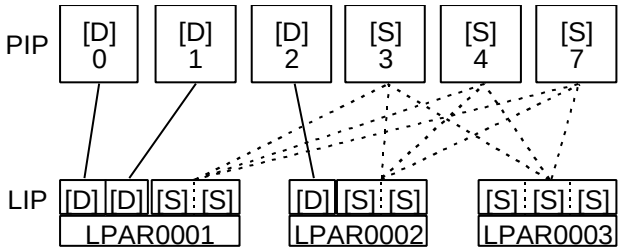

Figure 4-11 Combinations of PIPs and LIPs with PIPGSF Disabled

With PIPGSF enabled

A scheduling matrix between physical and logical IPs will be automatically determined within the same PIP Scheduling Group defined to each PIP and LPAR on the LPRIPN frame. Table 4-12 shows a scheduling matrix between physical and logical IPs as an example. Figure 4-12 illustrates the scheduling given in Table 4-12.

A scheduling matrix between physical and logical IPs both of which do not belong to any PIP scheduling group will be automatically determined when the number of such physical and logical IPs are the same. However, when the number of the said logical IPs exceeds that of the said physical IPs, physical IPs belonging to a PIP scheduling group may be assigned to the said logical IPs.

Table 4-12 Scheduling Matrix between PIPs and LIPs with PIPGSF Enabled

Category		**Onlined**		**GRP #**	**GRPCPU Address [Scheduling Mode] #(D: Dedicated, S: Shared, -: Offlined)**							
		D	**S**									
Physical IP (PIP)		3	5		0 [D]	1 [D]	2 [D]	3 [S]	4 [S]	5 [—]	6 [S]	7 [S]
					1	1	2	1	2	2	1	
Logical IP (LIP) assigned to LPAR	LPAR0001	2	3	1	[D]	[D]	—	[S]	—		[S]	—
	LPAR0002	1	2	2	—		[D]	—	[S]	[S]	—	
	LPAR0003	0	3		—			[S]	[S]	—		[S]
	LPAR0004	0	0	1	—			[S]	—		[S]	—

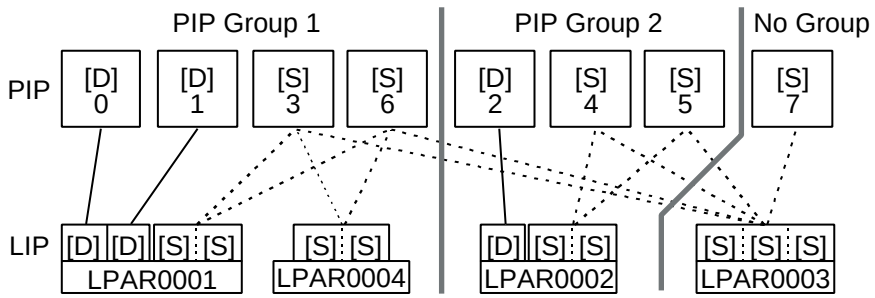

Figure 4-12 Combinations of PIPs and LIPs with PIPGSF Enabled

© COMPAREX Informationssysteme GmbH

4.5.3 Restrictions in Assignment of Logical IPs to Physical IPs

Depending on the combination of physical and logical IPs, MLPF has the restrictions in assignment of logical IPs to physical IPs as shown in Figure 4-13.

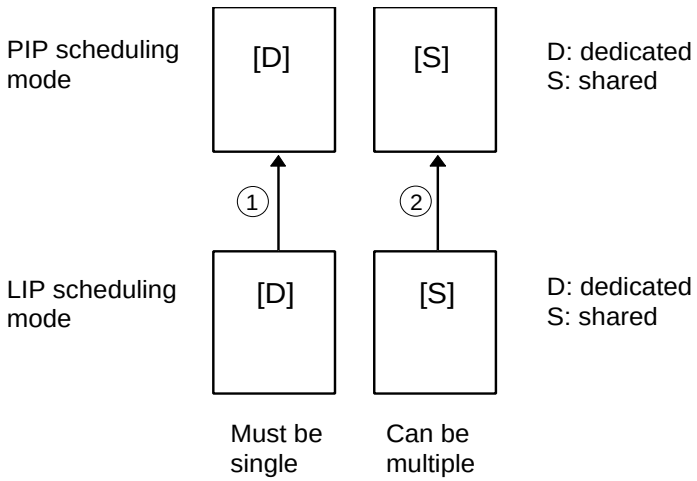

Figure 4-13 Restrictions in Assignment of Logical IPs to Physical IPs

Notes:

① *To a physical IP in dedicated mode, only one logical IP in dedicated mode can be assigned.*

② *To a physical IP in shared mode, any number of logical IPs in shared mode can be assigned*.

© COMPAREX Informationssysteme GmbH

4.6 Definition of Channels

Channel allocations for each LPAR in ESA mode or in HCF mode without ICMF must be defined on the LPRCH frame. For LPARs in Dummy mode and ICMF-specified LPARs in HCF mode, all the definition items on this frame are ignored. Figures 4-14 and 4-15 illustrate the frame images by processor model. An underlined part denotes an input area to which a definition parameter is entered. Bold letters denote information relevant to the definition operation. Details of operation are given in Table 4-13.

```
          1         2         3         4         5         6         7         8
12345678901234567890123456789012345678901234567890123456789012345678901234567890
 1 LPAR  1 : LPAR0001  LPAR CHANNEL DEFINITION        (LPRCH)  YY/MM/DD HH:MM:SS
 2 SCDS    : A0
 3 LPAR         MODE    ST                  ------CHPID------  ------CHPID------
 4   1 LPAR0001 ESA      A  INSTALLED&      00000000 00000000  11111111 11111111
 5   2 LPAR0002 ESA      D    ENABLED&      01234567 89ABCDEF  01234567 89ABCDEF
 6   3 LPAR0003 HCF      D    CONFIGURED  : +++++++- +++-++++  ++++++++ ++++++++
 7   4 LPAR0004 ESA      D   ONLINE       : ---+-+-- ------++  -------- --------
 8   5 LPAR0005 ESA      D
 9   6 LPAR0006 ESA      D   RECONFIG.    : RRRRRNN* RRR*RRRR  RRRRRRRR RRRRRRRR
10   7 LPAR0007 ESA      D   LPAR#/SHARED :                     1
11   8 LPAR0008 ESA      D                  7441111* 215*5699  0SS66666 6666S688
12   9 LPAR0009 ESA      A
13  10 LPAR0010 DMY      D
14  11 LPAR0011 ESA      D   CHANNEL TYPE : YLLLLLL* LLL*YLLL  NNNNNNNN TVVVNNNN
15  12 LPAR0012 ESA      D
16  13 LPAR0013 ESA      D
17  14 LPAR0014 ESA      D
18  15 LPAR0015 ESA      D
19 F-FUNCTION             Z-LPAR FRAME INDEX (LPRIDX)              U-PAGE UP
20  1-DEFINE              Z+FUNCTION CODE ON LPRIDX                D-PAGE DOWN
21  2-SAVE                 -DIRECT LPAR FRAME CALL
22
```

Figure 4-14 Definition of Channels on C2000-xxA, C2000-xxB, and C2000-xxC

```
          1         2         3         4         5         6         7         8
12345678901234567890123456789012345678901234567890123456789012345678901234567890
 1 LPAR  1 : HCF1      LPAR CHANNEL DEFINITION        (LPRCH)  YY/MM/DD HH:MM:SS
 2 SCDS    : A0
 3 LPAR         MODE    ST                  ------CHPID------  ------CHPID------
 4   1 HCF1     HCF      A  INSTALLED&      00000000 00000000  11111111 11111111
 5   2 HCF2     HCF      D    ENABLED&      01234567 89ABCDEF  01234567 89ABCDEF
 6   3 HCF3     HCF      D    CONFIGURED  : ----++-- ++--++--  ----++-- ++--++--
 7   4 HCF4     HCF      D   ONLINE       : ----++-- ++--++--  ----++-- ++--++--
 8   5 HCF5     HCF      D
 9   6 HCF6     HCF      D   RECONFIG.    : ****RR** RR**RR**  ****RR** RR**RR**
10   7 HCF7     HCF      D   LPAR#/SHARED :
11   8 HCF8     HCF      D                  ****11** 11**11**  ****11** 11**11**
12   9 HCF9     HCF      A
13  10 HCF10    HCF      D
14  11 HCF11    HCF      D   CHANNEL TYPE : ****RR** RR**RR**  ****RR** RR**RR**
15  12 HCF12    HCF      D
16  13 HCF13    HCF      D
17  14 HCF14    HCF      D
18  15 HCF15    HCF      D
19 F-FUNCTION             Z-LPAR FRAME INDEX (LPRIDX)              U-PAGE UP
20  1-DEFINE              Z+FUNCTION CODE ON LPRIDX                D-PAGE DOWN
21  2-SAVE                 -DIRECT LPAR FRAME CALL
22
```

Figure 4-15 Definition of Channels on CF2000-0xA

© COMPAREX Informationssysteme GmbH

Table 4-13 Operation Details for Definition of Channels

Definition Item	**Field on LPRCH Frame**	**Explanation**
Logical connection of physical channel path (display only)	INSTALLED& ENABLED& CONFIGURED	Displays whether each physical channel path is logically connected (+) or not (-).
Online/offline	ONLINE	Specifies online (+) or offline (-) status of each physical channel path.
CHPID-LPAR# [/SHARED]	LPAR#/ SHARED	Specifies LPAR number assigned to each physical channel path. Where "S" is indicated, the channel path is shared by multiple LPARs under EMIF. Where "*" is indicated, the channel path is not connected.
Reconfigurable (display only)	RECONFIG.	Displays whether each physical channel path is defined as Reconfigurable (R) or not (N). Where "*" is indicated, the channel path is not connected.
Channel type (display only)	CHANNEL TYPE	Shows the channel type of each physical channel path by the following one-character codes: L (block multiplexer), N (CNC), R (CFR), S (CFS), T (CTC), V (CVC), Y (byte multiplexer), and C (Open Systems Connection). Where "*" is indicated, the channel path is not connected.

© COMPAREX Informationssysteme GmbH

4.7 Definition of ICF Items

If the target machine is equipped with an Integrated Cryptographic Facility (ICF) option, such ICF-related parameters must be defined on the LPRICF frame as shown in Figure 4-16. Since the ICF option only applies to the C2000-xxA Models and C2000-xxB Models, the LPRICF frame is available only to these processor groups. An underlined portion denotes an input area to which a parameter is entered. Bold letters denote information relevant to the definition operation. Details of operations are given in Table 4-14.

```
          1         2         3         4         5         6         7         8
12345678901234567890123456789012345678901234567890123456789012345678901234567890
 1 LPAR  1 : LPAR0001  LPAR ICF DEFINITION            (LPRICF) YY/MM/DD HH:MM:SS
 2 SCDS    : A0
 3                                              ----CDX BIT MAP----
 4                                                          11 1111
 5 L-LPAR       MODE S  KSU  KE SPC ENA TIM CDX 0123 4567 8901 2345
 6   1 LPAR0001 ESA  A   0   Y   Y   Y   10  0  YYYY NNNN NNNN NNNN
 7   2 LPAR0002 ESA  D   1   N   Y   Y   10  4  NNNN YYNN NNNN NNNN
 8   3 LPAR0003 ESA  D   B   N   N   Y    1  6  NNNN NNYY NNNN NNNN
 9   4 LPAR0004 ESA  D   0   N   N   Y  500  8  NNNN NNNN YNNN NNNN
10   5 LPAR0005 ESA  D   0   N   Y   N  100  9  NNNN NNNN NYNN NNNN
11   6 LPAR0006 ESA  D   0   N   N   N  100 10  NNNN NNNN NNYN NNNN
12   7 LPAR0007 ESA  D   B   N   Y   Y  100 11  NNNN NNNN NNNY NNNN
13   8 LPAR0008 ESA  D   B   N   Y   Y  100 12  NNNN NNNN NNNN YNNN
14   9 LPAR0009 DMY  D   0   N   N   N  100     NNNN NNNN NNNN NNNN
15  10 LPAR0010 HCF  D       N   N   N  100     NNNN NNNN NNNN NNNN
16
17
18
19 F-FUNCTION            Z-LPAR FRAME INDEX (LPRIDX)
20  1-DEFINE/L           Z+FUNCTION CODE ON LPRIDX
21  2-SAVE                -DIRECT LPAR FRAME CALL
22
```

Figure 4-16 Definition of ICF Items on LPRICF Frame

Note: *The display image shown above applies to the display of up to 10 LPARs. For the display image of more than 10 LPARs, see chapter 7.*

Table 4-14 Operation Details for Definition of ICF Items

Definition Item	Field on LPRICF Frame	Explanation
Key Storage Unit	KSU	Specifies the Key Storage Unit (KSU) by the target KSU number: 0 (KSU0), 1 (KSU1), or B (both KSU numbers).
Key entry*	KE*	Specifies whether to enable (Y) or disable (N) a cryptographic key entry from keytops on the Key Storage Unit.
Special Secure mode*	SPC*	Specifies whether to enable (Y) or disable (N) Special Secure mode.
ICF Enable*	ENA*	Specifies whether to allow (Y) or prohibit (N) use of the ICF.
ICF time-slice value*	TIM*	Specifies the ICF time-slice value within the range of 1 ms thru 500 ms (absolute value) for the shared-mode IP resource in each LPAR with which a cryptographic instruction is dispatched only to an ICF-installed PIP.
CDX number (display only)*	CDX*	Displays the (smallest) CDX number for the LPAR. Highlighted if the LPAR has more than one CDX number.
CDX Bit Map (0–15)*	CDX BIT MAP (0–15)*	Specifies whether to enable (Y) or disable (N) the CDX number corresponding to the bit position.

* Not effective on an LPAR in Dummy mode (treated as “N”).

© COMPAREX Informationssysteme GmbH

4.8 Definition of MLPF System Option Setting

MLPF system option setting can be defined on the LPROPT frame as shown in Figure 4-17. An underlined portion denotes an input area to which a parameter is entered. Bold letters denote information relevant to the definition operation. Details of operations are given in Table 4-15.

```
          1         2         3         4         5         6         7         8
12345678901234567890123456789012345678901234567890123456789012345678901234567890
 1  LPAR  1 : LPAR0001  LPAR SYSTEM OPTION DEFINITION  (LPROPT) YY/MM/DD HH:MM:SS
 2  SCDS    : A0
 3
 4    OPTION ITEM     ENABLE    OPTION ITEM     ENABLE    OPTION ITEM     ENABLE
 5   1 AUTO SAVE          N
 6
 7   2 SYSACT PARTITION   N
 8
 9   3 CONFIRMATION       N
10
11   4 POLICY ERR SKIP    N
 :
18
19
20  F-FUNCTION             Z-LPAR FRAME INDEX (LPRIDX)
21   1-DEFINE              Z+FUNCTION CODE ON LPRIDX
22                          -DIRECT LPAR FRAME CALL
```

Figure 4-17 Definition of MLPF System Option Setting on LPROPT Frame

Table 4-15 Operation Details for Definition of MLPF System Option Setting

Definition Item	Field on LPROPT Frame	Explanation
Auto Save	ENABLE on AUTO SAVE	Specifies whether to enable (Y) or disable (N) the Auto Save function to all LPARs. Instead of normal save operation defined in section 4.13, the Auto Save function fast-saves the LPAR information every time the Enter key is pressed.
SYSACT Partition	ENABLE on SYS-ACT PARTITION	Specifies whether to enable (Y) or disable (N) the partitioned activity display on the SYSACT frame. • Y: Displays each LPAR busy rate in proportion to the total IP resource allocated to the target LPAR. • N: Displays each LPAR busy rate in proportion to the total IP resource in the processor complex.
Confirmation	ENABLE on CONFIRMATION	Specifies whether to enable (Y) or disable (N) every confirmation prompt prior to execution of applicable commands as detailed in chapter 7.
Policy Error Skip	ENABLE on POL-ICY ERR SKIP	Specifies whether to continue (Y) or terminate (N) MLPF Policy execution when an error occurs.

© COMPAREX Informationssysteme GmbH

4.9 Definition of PF Keys

PF key texts can be defined on the LPRPFK frame. Figure 4-18 illustrates the frame image. An underlined portion denotes an input area to which a PF key text is entered. Bold letters denote information relevant to the definition operation.

PF key texts can be defined individually. To change a once-defined text, just overwrite a new text. This frame corresponds to a physical console; that is, the PF key text defined on one Console Device (CD) applies only to that CD, not to the other CD(s).

```
          1         2         3         4         5         6         7         8
12345678901234567890123456789012345678901234567890123456789012345678901234567890
 1 LPAR  1 : LPAR0001  LPAR PF KEY DEFINITION         (LPRPFK) YY/MM/DD HH:MM:SS
 2 SCDS    : A0
 3
 4   PF1   (_____________________________________________________________)
 5   PF2   (_____________________________________________________________)
 6   PF3   (_____________________________________________________________)
 7   PF4   (_____________________________________________________________)
 8   PF5   (_____________________________________________________________)
 9   PF6   (_____________________________________________________________)
10   PF7   (_____________________________________________________________)
11   PF8   (_____________________________________________________________)
12   PF9   (_____________________________________________________________)
13   PF10  (_____________________________________________________________)
14   PF11  (_____________________________________________________________)
15   PF12  (_____________________________________________________________)
16
17
18
19 F-FUNCTION             Z-LPAR FRAME INDEX (LPRIDX)              U-PAGE UP
20  1-DEFINE              Z+FUNCTION CODE ON LPRIDX                D-PAGE DOWN
21  2-SAVE                 -DIRECT LPAR FRAME CALL
22
```

Figure 4-18 Definition of PF Keys on LPRPFK Frame

© COMPAREX Informationssysteme GmbH

4.10 Definition of MLPF Policy

MLPF Policy can be defined on the LPRPOL frame as shown in Figure 4-19. An underlined portion denotes an input area to which a parameter is entered. Bold letters denote information relevant to the definition operation. Details of operations are given in Table 4-16.

```
          1         2         3         4         5         6         7         8
12345678901234567890123456789012345678901234567890123456789012345678901234567890
 1 LPAR  1 : LPAR0001  MLPF POLICY DEFINITION        (LPRPOL) YY/MM/DD HH:MM:SS
 2 SCDS    : A0
 3 S-SELECTED PROFILE  : 01    PROFILE NAME : SAMP001   P-PROFILE STATUS : ACT
 4 NO. DATE       TIME                NO.     POLICY SCRIPT NAME
 5  1  1999/01/01 00:00               01      HOLYDAYS
 6  2  EVERYDAY   17:00               11      AFTER-5
 7  3  EVERYDAY   09:00               12      9-OCLOCK
 8  4  FRIDAY     17:00               21      WEEKEND
 9  5  MONDAY     09:00               22      NEWWEEK
10  6
11  7
12  8
13  9
14 10
15 11
16 12
17 13
18 14
19 15
20 F-FUNCTION           E-EDIT             L-LIST              EL-EDIT LINE
21  1-DEFINE             >1-POLICY PROFILE   1-POLICY PROFILE LIST
22  2-SAVE                2-POLICY SCRIPT    2-POLICY SCRIPT LIST
```

```
          1         2         3         4         5         6         7         8
12345678901234567890123456789012345678901234567890123456789012345678901234567890
 1 LPAR  1 : LPAR0001  MLPF POLICY DEFINITION        (LPRPOL) YY/MM/DD HH:MM:SS
 2 SCDS    : A0
 3 S-SELECTED SCRIPT NO.: 11    SCRIPT NAME : HOLIDAYS
 4 NO. PMC COMMAND                                                  TARGET
 5  1  (DEACT                                                       ) LPAR0001
 6  2  (DEACT                                                       ) LPAR0002
 7  3  (DEACT                                                       ) LPAR0010
 8  4  (SAVE                                                        )
 9  5  (                                                           )
10  6  (                                                           )
11  7  (                                                           )
12  8  (                                                           )
13  9  (                                                           )
14 10  (                                                           )
15 11  (                                                           )
16 12  (                                                           )
17 13  (                                                           )
18 14  (                                                           )
19 15  (                                                           )
20 F-FUNCTION         E-EDIT             L-LIST               EL-EDIT LINE
21  1-DEFINE           1-POLICY PROFILE    1-POLICY PROFILE LIST
22  2-SAVE            >2-POLICY SCRIPT     2-POLICY SCRIPT LIST
```

Figure 4-19 Definition of MLPF Policy on LPRPOL Frame

© COMPAREX Informationssysteme GmbH

Table 4-16 Operation Details for Definition of MLPF Policy

Definition Item	Field on LPROPT Frame	Explanation
Policy Profile	S-SELECTED PROFILE	Specifies Policy Profile number to be edited.
	PROFILE NAME	Defines Policy Profile name.
	P-PROFILE STATUS	Defines Policy Profile status.
	CLASS	Specifies Policy Profile class: "E" (emergency) or "N" (normal).
	DATE/EVENT	Defines date or event for scheduled execution.
	TIME	Defines time for scheduled execution.
	NO.	Specifies Policy Script number.
Policy Script	S-SELECTED SCRIPT NO.	Specifies Policy Script number to be edited.
	SCRIPT NAME	Defines Policy Script name.
	PMC COMMAND	Specifies the PMC command to be executed.
	TARGET	Specifies the execution target for the PMC command. Entering an LPAR name selects a specific LPAR and leaving the field blank selects the entire system.

© COMPAREX Informationssysteme GmbH

4.11 Definition of LPAR Local TOD and Time Accelerator

LPAR Local TOD and Time Accelerator can be defined on the LPRTOD frame as shown in Figure 4-20. An underlined portion denotes an input area to which a parameter is entered. Bold letters denote information relevant to the definition operation. Details of operations are given in Table 4-17.

```
          1         2         3         4         5         6         7         8
12345678901234567890123456789012345678901234567890123456789012345678901234567890
 1  LPAR  1 : LPAR0001  LPAR TOD CLOCK                  (LPRTOD)  YY/MM/DD HH:MM:SS
 2  SCDS    : A0
 3
 4                      CURRENT TIME(SYSTEM)   OFFSET        TID  PORT
 5    PROCESSOR         1997 /09/11 16:13:14
 6    SVP LOCAL         1997 /09/11 16:13:14   + 00:00:00
 7    EXTERNAL TIME     1997 /09/11 16:13:14                 01   02
 8  L-LPAR       MODE S CURRENT TIME(LPAR)     LOCAL OFFSET  OEN  TA  AMLT
 9    1 LPAR0001 ESA  A 1997 /09/11 16:13:14   + 00:00:00     N   N
10    2 LPAR0002 ESA  A 1997 /09/11 18:13:14   + 02:00:00     Y   N
11    3 LPAR0003 ESA  A 2000 /01/01 00:00:00   + **:**:**     N   N
12    4 LPAR0004 ESA  A 1997 /09/11 13:13:14   - 03:00:00     Y   N
13    5 LPAR0005 ESA  A 1999 /12/30 12:01:23   + **:**:**     N   Y    20
14    6 LPAR0006 ESA  D **** /**/** **:**:**   + 00:00:00     N   N
15    7 LPAR0007 ESA  D **** /**/** **:**:**   + 01:00:00     Y   N
16    8 LPAR0008 ESA  D **** /**/** **:**:**   - 01:00:00     Y   N
17    9 LPAR0009 HCF  D **** /**/** **:**:**   + 00:00:00     N   N
18   10 LPAR0010 HCF  D **** /**/** **:**:**   + 00:00:00     N   N
19  F-FUNCTION
20   2-SAVE       N-NEW DATE/L
21                L-LOCAL OFFSET/L
22                T-TIME ACCELERATOR/L
```

Figure 4-20 Definition on LPRTOD Frame

Note: *The display image shown above applies to the display of up to 10 LPARs. For the display image of more than 10 LPARs, see chapter 7.*

Table 4-17 Operation Details on LPRTOD Frame

Definition Item	Field on LPRTOD Frame	Explanation
LPAR Local TOD setting	CURRENT TIME (LPAR)	Specifies a local TOD value to each target LPAR.
LPAR Local Offset setting	LOCAL OFFSET	Specifies an offset to the local TOD setting of each target LPAR.
LPAR Local TOD/Offset enable	OEN	Enables (Y) or disables (N) LPAR Local TOD/ Offset setting to each target LPAR.
Time Accelerator enable	TA	Enables (Y) or disables (N) Time Accelerator to each target LPAR.
Acceleration multiplying factor	AMLT	Specifies an acceleration multiplying factor to each target LPAR.

© COMPAREX Informationssysteme GmbH

4.12 (Intentionally Left Blank)

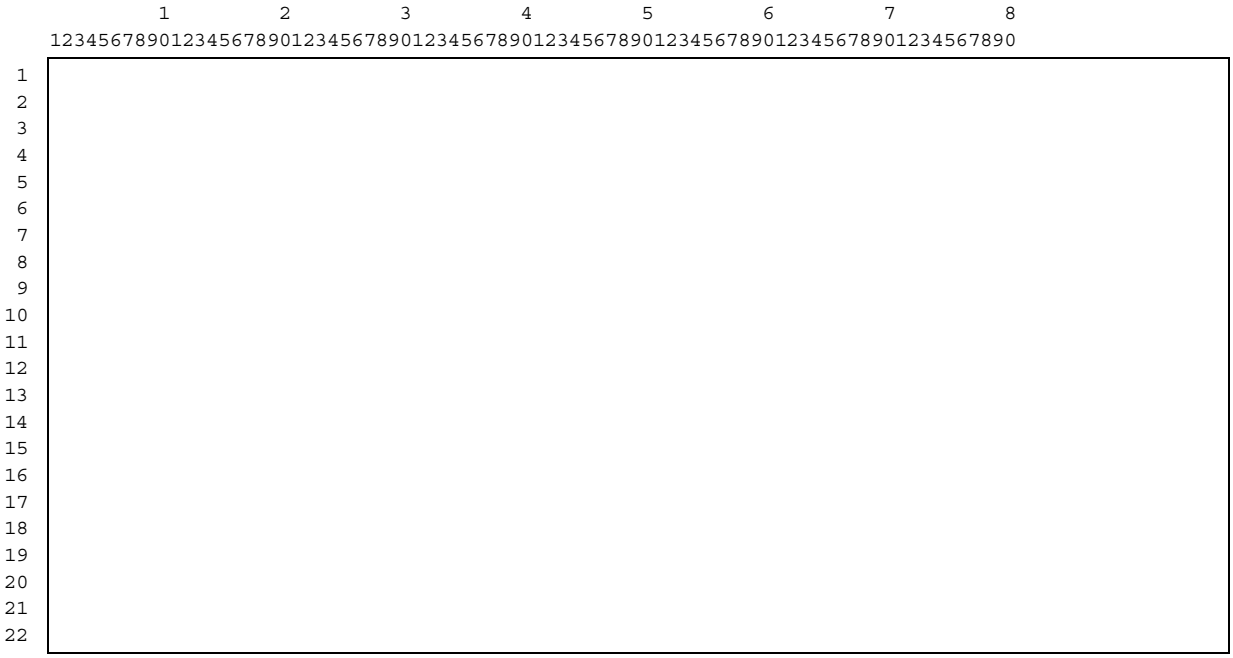

Figure 4-21 (Intentionally Left Blank)

Table 4-18 (Intentionally Left Blank)

© COMPAREX Informationssysteme GmbH

4.13 Saving of Definition Information

Most of the LPAR definition information can be saved in independent files through console operations of Normal Save or Auto Save. Normal Save is performed with the F2 (SAVE) frame command or the SAVE command provided as an LPAR control command. The F2 (SAVE) frame command causes the definition information on the subject frame to be saved altogether at a time. The same result is obtained by entering the SAVE command, provided as an LPAR control command, in the command input line of any LPAR frame. Auto Save, on the other hand, is usually an optional means of saving performed at every pressing of the Enter key.

Note: *To utilize Auto Save on LPAR frames other than LPROPT, the Auto Save setting on the LPROPT frame needs to be enabled in advance. On the LPROPT frame, Auto Save is always performed regardless of the setting.*

For saving of the LPAR definition information, two types of files are provided in addition to the SCDS.

- LPAR Configuration File

  LPAR Configuration Files are provided in one-to-one correspondence with SCDSs for LPAR mode; hence, the definition information for a maximum of 15 LPARs can be saved in one LPAR Configuration File. The configuration information of one LPAR name is kept updated across all LPAR Configuration Files to the last-saved one on any LPAR Configuration File.

  Every definition information on the LPRDEF, SLPDEF, LPRRSC, LPRCTL, LPRIPN, LPRCH, LPRICF, and LPRTOD frames except CPU ID (VER/SER#) on the LPRDEF or SLPDEF frame is saved in an LPAR Configuration File by Normal Save or Auto Save.

  Every definition information of the PROTECT, UNPROTECT and SYSTEM CHP (OFF) commands is also saved in an LPAR Configuration File by Normal Save or Auto Save.

- LPAR Control File

  The MLPF system option setting defined on the LPROPT frame, the PF key text defined on the LPRPFK frame and the MLPF Policy setting defined on the LPRPOL frame are saved in LPAR Control Files. Specifically, the PF key texts and the MLPF Policy setting are saved by means of the frame command F2 (each provided on the LPRPFK frame and the LPRPOL frame) or by Auto Save if enabled; the MLPF system option setting is automatically saved, regardless of the Auto Save setting, at every pressing of the Enter key on the LPROPT frame.

  The PF key text is provided in one-to-one correspondence with a physical Console Device. The MLPF system option setting and the LPAR frame security levels are provided in one-to-one correspondence with a current MLPF system.

Figures 4-22 and 4-23 on next page illustrate the relationships between SYSIML clear and saving of the LPAR definition information.

Figure 4-22 is a conceptual diagram on SYSIML clear with the updated SCDS for the LPAR mode specified. During SYSIML clear, a synthesis of the specified SCDS (LPAR names and channel path information) and initial values (those on the LPRDEF, SLPDEF, LPRRSC, LPRCTL, LPRIPN, LPRCH, LPRICF, and LPRTOD frames; Table 4-1 in section 4.1), as well as LPAR Control Files, is loaded into the EHSA (Extended HSA)[1]. The definition information entered from each frame in LPAR mode is laid out in the EHSA. Then, the definition information in the EHSA is saved in the LPAR Configuration Files or the LPAR Control Files corresponding to the SCDS specified at the SYSIML clear.

Figure 4-23 is a conceptual diagram on SYSIML clear without updating the SCDS. During SYSIML clear, a synthesis of the SCDS and LPAR Configuration Files, as well as LPAR Control Files, is laid out in the EHSA. Each LPAR configuration is automatically defined with the last-saved values.

Note: *The contents of the SCDS, LPAR Configuration Files, and LPAR Control Files remain saved even if the system is powered off.*

1. HSA (hardware system area) in main storage is extended for LPARs and is used to accommodate Hypervisor (LPAR-controlling macrocode) in addition to configuration definition information.

© COMPAREX Informationssysteme GmbH

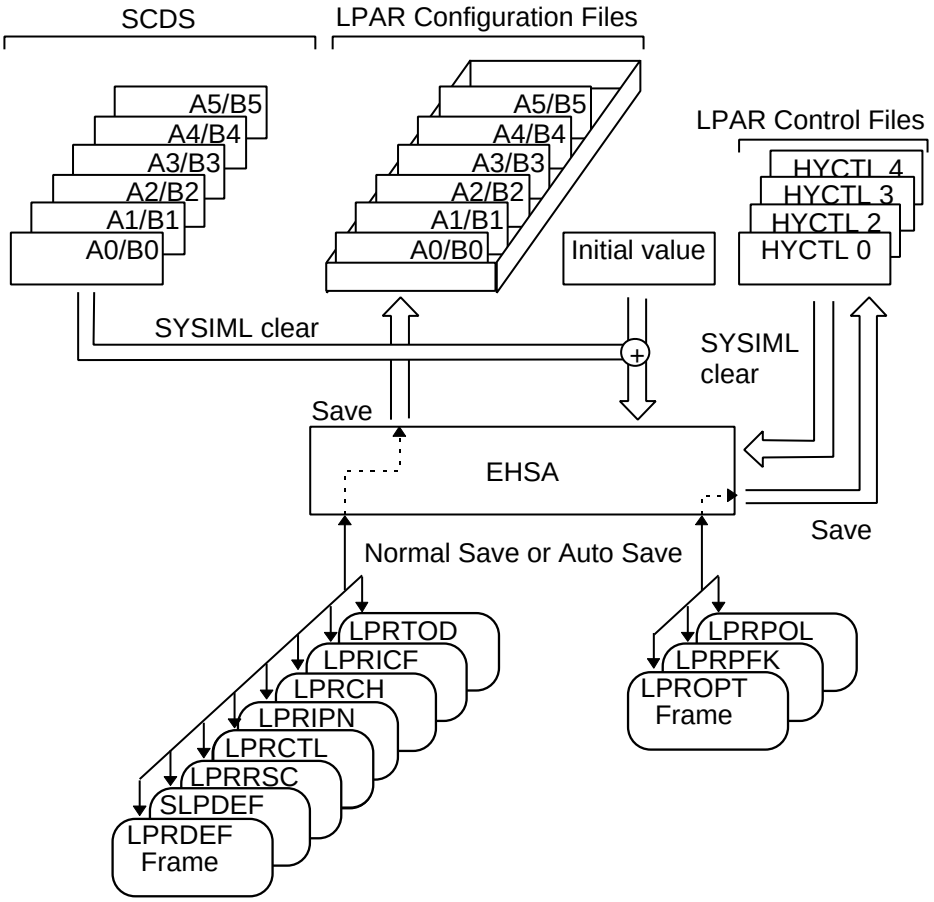

Figure 4-22 SYSIML Clear and Save with Updated SCDS

© COMPAREX Informationssysteme GmbH

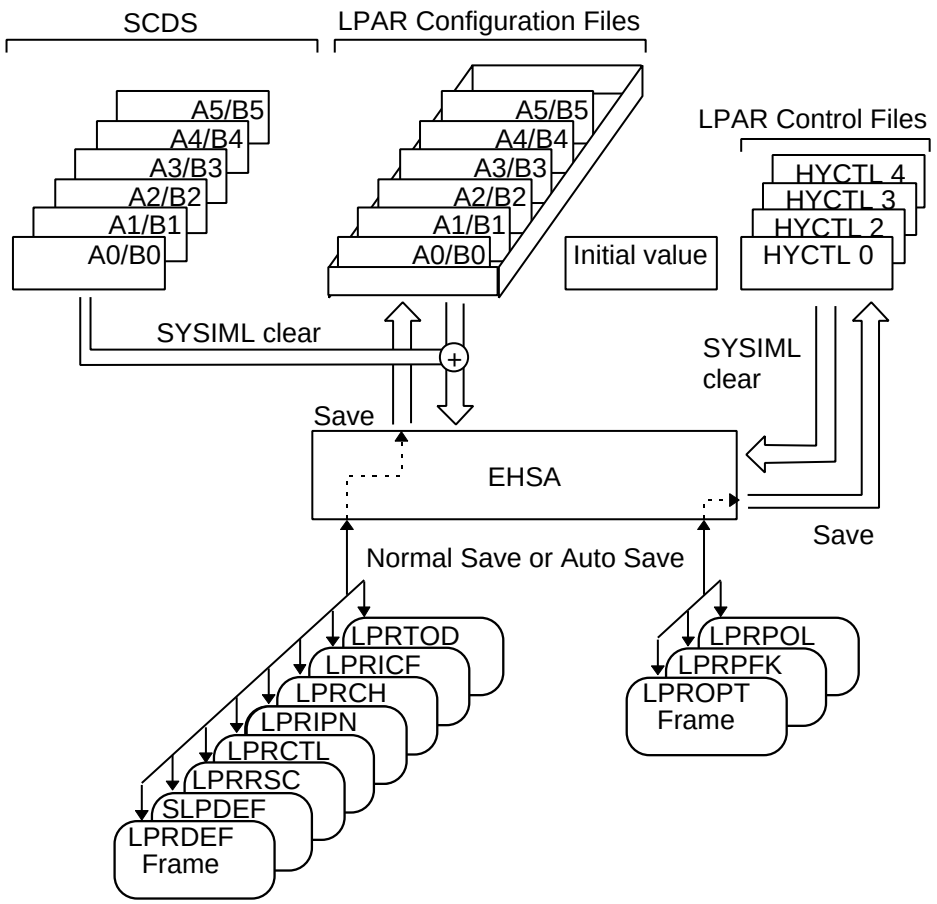

Figure 4-23 SYSIML Clear and Save without Updating SCDS

© COMPAREX Informationssysteme GmbH

5 INTRODUCTION TO MLPF OPERATING PROCEDURES

5.1 Overview of MLPF Operations

All control operations for the logical partition (LPAR) use the LPAR frames.

The LPAR frames are displayed in a separate window (LPAR Frame window) along with the window for the operator frames (Basic Frame window) on the SVP Desktop window provided on each Console Device (CD). Switching between an LPAR frame and an operator (Basic) frame is performed by double-clicking the target frame icon or by clicking the target frame window on the SVP Desktop window. Processing of each LPAR frame can continue independently even while the other frames are selected. However, a key input to an LPAR frame is possible only when the frame is selected.

An LPAR frame consists of

- Lines 1–22: lines for data display, menu display and data input
- Line 23: message display line (up to 72 characters)
- Line 24: command input line (up to 64 characters)

Two types of commands are used to control LPARs:

- LPAR frame commands: effective only to the LPAR frame being displayed
- LPAR control commands: effective to all LPAR frames

Under MLPF 3.5.1, LPAR frames and commands incorporate the same access control capability as Basic frames and system commands.

5.2 LPAR Frames

5.2.1 Frame Structure and Means of Frame Selection

In LPAR mode, an operator (Basic) frame and an LPAR frame are displayed in separate windows on the SVP Desktop window provided on each Console Device, and can be switched between each other by double-clicking the target frame icon or by clicking the target frame window (Figure 5-1). LPAR frames provide status display, configuration definition and control/supervision of LPARs. To display an operator frame of any other LPAR, another console dedicated to the other LPAR is required. As in Basic mode, frame selection can be performed by the Sel Frame key function or the CALL command. Additional means of frame selection among the LPAR frames shown in the index (LPRIDX) are provided as illustrated in Figure 5-2 (x, Z and Zx).

Sel Frame key function

Selecting the Sel Frame key function from the pull-down menu or pressing the short-cut key combination of Ctrl and F12 in the Basic Frame window calls up the INDEX frame. Then, a new frame can be called as follows:

- An operator frame indexed with a two-character frame ID can be selected by entering the frame ID in the command input field (bracketed field in line 24).
- An operator frame without a frame ID can be selected by first entering a one-character mnemonic for the frame group and then entering another one-character mnemonic for the frame in the command input field.
- The last-used LPAR frame can be selected by entering “LP” in the command input field.

CALL command

The CALL command causes a direct frame change among operator frames or among LPAR frames (not necessarily via the INDEX frame or the LPRIDX frame). Enter “CALL,” one space, and a frame code in the command input field.

© COMPAREX Informationssysteme GmbH

Additional means of frame selection among LPAR frames

See Figure 5-2. Certain LPAR frames may not show the guidance to this function (“Z” and “Z+FUNCTION CODE ON LPRIDX”) but the function is effective on all the LPAR frames displayed on the LPRIDX frame.

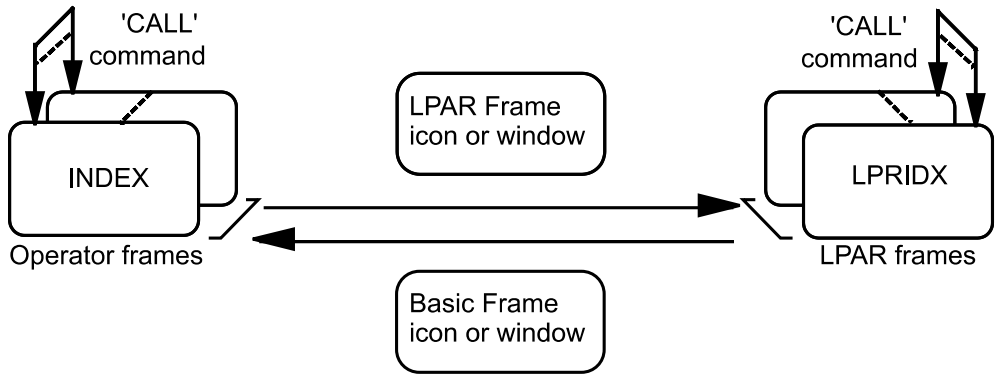

Figure 5-1 Frame Structure and Means of Frame Selection

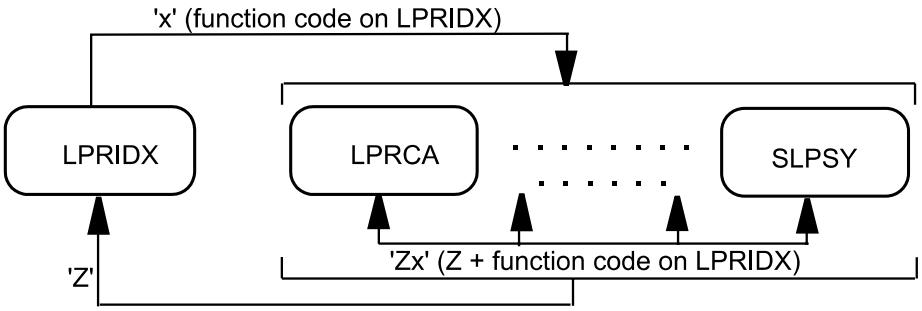

Figure 5-2 Additional Means of Selection among LPAR Frames

5.2.2 Functional Outline of LPAR Frames

The LPAR frames display the status of, define the settings of, and control LPARs as listed in Table 5-1. A frame with a frame code “LPRxxx” performs common control on all LPARs, while one with a frame code “SLPxxx” performs control on a selected LPAR. The frame name and frame code are displayed in the first line of each frame.

An “LPRxxx” frame other than LPRIDX, LPRLOG and LPROPC further displays, if running in 2-IOCDS mode, the paired SCDS number, the LPAR Group number and the number of activated LPARs in the second line. Also an “SLPxxx” frame further displays the SCDS number at the leftmost position in the second line and, if running in 2-IOCDS mode, the paired SCDS number, the LPAR Group number and the number of activated LPARs in the second line as well.

Table 5-1 List of LPAR Frames

Frame Code	Frame Name	Function (Sheet 1 of 2)
LPRCA	LPAR Channel Assignment	Displays channel information for LPARs.
LPRCH	LPAR Channel Definition	Defines channel information for LPARs.
LPRCTL	LPAR Control Definition	Defines LPAR control information.
LPRDEF	LPAR Config Definition	Defines LPAR configuration information.
LPRICF	LPAR ICF Definition	Defines information of the ICF for LPARs. Only available on ICF-installed processor models (C2000-xxA and C2000-xxB.
LPRIDX	LPAR Frame Index	Displays the menu of LPAR frames.
LPRIPA	LPAR IP Assignment	Displays IP scheduling information for LPARs.

© COMPAREX Informationssysteme GmbH

Frame Code	Frame Name	Function (Sheet 2 of 2)
LPRIPN	LPAR IP Numeric Definition	Defines IP scheduling information for LPARs.
LPRLOG	LPAR Log	Displays failure description and recovery guidance in the event of an IP failure.
LPROPC	LPAR Online Patch Control	Controls online patch operation in LPAR mode.
LPROPT	LPAR System Option Definition	Defines LPAR system options of Auto Save, SYSACT Partition, Confirmation, and Policy Error Skip.
LPRPFK	LPAR PF Key Definition	Defines command texts for PF keys used on LPAR frames.
LPRPOL	MLPF Policy Definition	Defines MLPF Policy information.
LPRRSC	LPAR Resource Definition	Defines LPAR resource information.
LPRSSR	LPAR System Status Recording	Displays a history of LPAR frame operations in time series.
LPRSTR	LPAR Storage Assignment	Displays the status of storage assignment to the LPARs in the activated status.
LPRSUM	LPAR Message Summary	Lists OS and HCCFA messages and their priorities received by all LPARs under console integration.
LPRTIP	LPAR Time Machine IP Definition	Displays and can alter the status of Time Machine Facility. Not applicable to CF2000 models.
LPRTOD	LPAR TOD Clock	Provides each LPAR with LPAR Local TOD and Time Accelerator Facilities.
*	*	*
SLPAC	LPAR Address Compare	Performs address/data comparison for a selected LPAR. Not applicable to CF2000-0xA models.
SLPAD	LPAR Alter/Display	Displays and can alter the contents of storages and registers for a selected LPAR. Not applicable to CF2000-0xA models.
SLPDEF	LPAR Definition Assorted	Defines major configuration and control information for a selected LPAR in an assorted manner.
SLPDEV	LPAR IO Device	Displays I/O device information for a selected LPAR. Not applicable to CF2000-0xA models.
SLPMSG	LPAR Operator Message	Provides a means of communications with OS and HCCFA messages on a selected LPAR under console integration.
SLPOP	LPAR Operator Control	Performs operator control functions for a selected LPAR such as IPL. Not applicable to CF2000-0xA models.
SLPOPC	LPAR HCCF Online Patch Control	Controls online patch operation for HCCFA running on a selected HCCF-LPAR.
SLPSY	LPAR System Control	Performs system control functions for a selected LPAR such as initialization of system control program. Not applicable to CF2000 models.
*	*	*

* Intentionally left blank.

© COMPAREX Informationssysteme GmbH

5.2.3 Basic Frames in LPAR Mode

Certain frames in Basic Frame window are modified, disabled, or enabled in LPAR mode as shown in Table 5-2. The other operator frames remain the same in their functions and usages as in Basic mode.

Table 5-2 Basic Frames Affected in LPAR Mode

Basic Frame	Behavior in LPAR Mode (Deviation from Basic Mode)		
	Category	**Contents**	**Frame**
ADRCMP*	Replacement with LPAR frame	SLPAC frame in LPAR Frame window replaces ADRCMP frame deleted from Basic Frame window.	SLPAC
ALTDSP*	Replacement with LPAR frame	SLPAD frame in LPAR Frame window replaces ALTDSP frame deleted from Basic Frame window.	SLPAD
CCHCNF	Functional degradation	The channel path online/offline function is deleted.	CCHCNF
	Partial replacement with LPAR frame	LPRCH frame in LPAR Frame window provides the function deleted from CCHCNF frame.	LPRCH
CNSCNF*	Deletion of frame	The frame and its functions are deleted from Basic Frame window.	—
CURCNF	Additional display	“LPAR” is added to the CPU MODE display.	CURCNF
HCFCNF**	Availability in LPAR mode only	The frame and its functions are available in LPAR mode only.	HCFCNF
INDEX	Display change	"LP" to jump to LPAR Frame window is added, and frames not available in LPAR mode are deleted.	INDEX
LPHDSP	Enablement of frame functions	The frame functions, all disabled in Basic mode, are enabled.	LPHDSP
MODSEL†	Functional addition	“LPAR” is added to the CPU MODE options.	MODSEL
OCFOAT†	Functional addition	LPAR number is added to parameters for specifying targets.	OCFOAT
ONPCTL*††	Replacement with LPAR frame	LPROPC frame in LPAR Frame window replaces ONPCTL frame deleted from Basic Frame window.	LPROPC
OPRCTL	Functional addition	The functions MLPF LOGOUT and SYSTEM INITIALIZE are added.	OPRCTL
	Functional degradation	Functions other than CHECK CONTROL are deleted.	
	Partial replacement with LPAR frame	SLPOP frame in LPAR Frame window provides the functions deleted from OPRCTL frame.	SLPOP
OPRMSG*	Replacement with LPAR frame	SLPMSG frame in LPAR Frame window replaces OPRMSG frame deleted from Basic Frame window.	SLPMSG
SYSACT	Functional addition	Activity of each LPAR is displayed.	SYSACT
SYSCNF	Additional display	“LPAR” is added to the CPU MODE display.	SYSCNF
SYSCTL*	Replacement with LPAR frame	SLPSY frame in LPAR Frame window replaces SYSCTL frame deleted from Basic Frame window.	SLPSY
SYSREC*	Replacement with LPAR frame	LPRSSR frame in LPAR Frame window replaces SYSREC frame deleted from Basic Frame window.	LPRSSR

* Made unavailable in LPAR mode. Accordingly, not applicable to CF200-0xA Models.
** Applicable only to CF2000-0xA Models.
† Not applicable to CF2000-0xA Models.
†† Meant for service personnel only.

© COMPAREX Informationssysteme GmbH

5.3 LPAR Control Commands

LPAR control commands are a group of commands which control LPAR operations and take effect on any LPAR frame. Each command is entered into the command input field (bracketed field in line 24) on an LPAR frame. Table 5-3 shows the menu and the functions of the LPAR control commands.

Table 5-3 List of LPAR Control Commands

Command	Function
ACTIVATE	Activates an LPAR.
CALL	Calls an LPAR frame.
CANCEL	Forcibly changes an LPAR frame displayed on the other CD to the LPRIDX frame.
CG	Toggles the target LPAR Group from one to the other. Only available in 2-IOCDS mode.
*	*
DEACTIVATE	Deactivates an LPAR.
DEACTPOL	Deactivates a Policy Profile.
LD	Scrolls down LPAR information display.
LU	Scrolls up LPAR information display.
MVSTOR	Dynamically changes the MS allocation of an LPAR.
PROTECT	Protects an LPAR from operation.
*	*
RETRIEVE	Displays up to 16 commands that has been entered since the opening of the target LPAR frame.
SAVE	Saves the currently-defined LPAR configuration information into the LPAR Configuration Files.
SELECT	Selects an LPAR to be operated.
SETIC	Sets an instruction counter. Meaningless and not effective to CF2000-0xA models.
SYSTEM CHP	Makes a channel path online/offline.
SYSTEM ETAF	Recovers ETR ports from disabled status. Not applicable to CF2000-0xA Models.
SYSTEM HCCFDUMP	Collects dump data of HCCFA.
SYSTEM INTERRUPT	Causes an external interruption. Meaningless and not effective to CF2000-0xA models.
SYSTEM IP	Reconnects or disconnects a physical IP.
SYSTEM IPL	Performs initial program loading. Meaningless and not effective to CF2000-0xA models.
SYSTEM ISTEP	Turns on/off the instruction step function. Meaningless and not effective to CF2000 models.
SYSTEM LIPCNV	Changes the scheduling mode of a logical IP.
SYSTEM LIPOFF	Offlines a logical IP.
SYSTEM LIPON	Onlines a logical IP.
*	*
SYSTEM RESET	Starts a system reset or system clear reset. Meaningless and not effective to CF2000-0xA models.
SYSTEM RESTART	Restarts a logical IP. Meaningless and not effective to CF2000-0xA models.
SYSTEM START	Starts a logical IP. Meaningless and not effective to CF2000-0xA models.
SYSTEM STOP	Stops a logical IP. Meaningless and not effective to CF2000-0xA models.
SYSTEM STORESTATUS	Stores the status of a logical IP. Meaningless and not effective to CF20000xA models.
TOD	Sets and synchronizes the TOD clock for all LPARs only when required at startup of MLPF.
UNPROTECT	Releases operation protection from an LPAR.

*Intentionally left blank.

© COMPAREX Informationssysteme GmbH

5.4 User Level Restrictions on LPAR Frames and LPAR Control Commands

Under MLPF 3.5.1, access control by user levels available for Basic frames and system commands is also available for LPAR frames and LPAR control commands.

An LPAR frame can be called in an appropriate user level other than AA (Access Administrator); operation thereafter is access-controlled by the user levels Op (Operator), AO (Advanced Operator), SP (System Programmer), and CE (Customer Engineer, for service personnel only) as provided in Table 5-4. For description of individual LPAR frame commands and definition fields, chapter 7.

An LPAR control command is access-controlled by the user levels Op, AO, SP, and CE as provided in Table 5-5. For description of individual LPAR control commands, see chapter 8.

© COMPAREX Informationssysteme GmbH

Table 5-4 User Level Restrictions on LPAR Frames

Frame Code	Frame Command or Definition Field (Sheet 1 of 6)		Application by User Level			
			Op	AO	SP	CE
LPRCA	U-PAGE UP		√	√	√	√
	D-PAGE DOWN		√	√	√	√
	S-STATUS VIEW (incl. subfunctions)		√	√	√	√
LPRCH	F-FUNCTION	1-DEFINE		√	√	√
		2-SAVE			√	
	U-PAGE UP		√	√	√	√
	D-PAGE DOWN		√	√	√	√
	ONLINE			√	√	√
	LPAR#/SHARED				√	√
LPRCTL	L-LPAR			√	√	√
	F-FUNCTION	1-DEFINE/L		√	√	√
		2-SAVE			√	
	LU-LPAR PAGE UP		√	√	√	√
	LD-LPAR PAGE DOWN		√	√	√	√
	WC				√	√
	RC				√	√
	IO				√	
	RF				√	
	IS				√	
	PR			√	√	√
	XL				√	
	AD				√	
	MF				√	√
	TM				√	
	TW				√	
	BR				√	√
	MD				√	√
	PL				√	
	PX				√	
LPRDEF	L-LPAR		√	√	√	√
	MODE				√	√
	AP			√	√	√
	A			√	√	√
	MS, ES				√	√
	F			√	√	√
	IP/DEV#			√	√	
	PARM			√	√	
	VER/SER#	(Version code)†			√	
		(Serial number)				
	F-FUNCTION	1-DEFINE/L		√	√	√
		2-SAVE			√	
		3-ACTIVATE/L	√	√	√	√
		4-DEACTIVATE/L		√	√	√

© COMPAREX Informationssysteme GmbH

Frame Code	Frame Command or Definition Field (Sheet 2 of 6)		Application by User Level			
			Op	AO	SP	CE
LPRICF	L-LPAR			√	√	
	KSU			√	√	
	KE			√	√	
	SPC			√	√	
	ENA			√	√	
	CDX BIT MAP			√	√	
	F-FUNCTION	1-DEFINE/L		√	√	
		2-SAVE			√	
LPRIDX	S1-LPAR CONTROL FRAMES		√	√	√	√
	S2-LPAR CONFIGURATION FRAMES		√	√	√	√
LPRIDO	LO-LPAR OPERATOR CONTROL		√	√	√	√
	LS-LPAR SYSTEM CONTROL		√	√	√	
	LA-LPAR ALTER/DISPLAY			√	√	
	LC-LPAR ADDRESS COMPARE			√	√	√
	LR-LPAR SYSTEM STATUS RECORDING		√	√	√	√
	LM-LPAR OPERATOR MESSAGE		√	√	√	√
	LU-LPAR MESSAGE SUMMARY		√	√	√	√
	LP-LPAR ONLINE PATCH CONTROL *				√	√
	**					
	LH-LPAR HCCF ONLINE PATCH CONTROL *				√	√
LPRIDD	D-LPAR CONFIGURATION DEFINITION		√	√	√	√
	I-LPAR IP DEFINITION			√	√	√
	C-LPAR CHANNEL DEFINITION		√	√	√	√
	S-LPAR IO DEVICE			√	√	√
	P-LPAR PF KEY DEFINITION		√	√	√	√
	R-LPAR RESOURCE DEFINITION			√	√	√
	T-LPAR CONTROL DEFINITION			√	√	√
	M-LPAR STORAGE ASSIGNMENT			√	√	√
	H-LPAR CHANNEL ASSIGNMENT		√	√	√	√
	F-LPAR ICF DEFINITION			√	√	
	Q-LPAR IP ASSIGNMENT			√	√	√
	A-LPAR DEFINITION ASSORTED		√	√	√	√
	N-LPAR TIME MACHINE IP DEFINITION				√	√
	X-LPAR TOD-CLOCK			√	√	√
	Y-LPAR SYSTEM OPTION DEFINITION			√	√	√
	O-LPAR POLICY DEFINITION			√	√	√
	**					
LPRIPA	S-SCHEDULE ASSIGNMENT		√	√	√	√
	I-LOGICAL ICF ASSIGNMENT		√	√	√	√
LPRIPN	L-LPAR		√	√	√	√
		LIP count by mode			√	√
		PIP GRP or VS#			√	√
		ALT IP			√	√
		SRV			√	√
	LU-PAGE UP		√	√	√	√
	LD-PAGE DOWN		√	√	√	√

© COMPAREX Informationssysteme GmbH

Frame Code	Frame Command or Definition Field (Sheet 3 of 6)			Application by User Level			
				Op	AO	SP	CE
LPRIPN (cont.)	F-FUNCTION	1-DEFINE/L				√	√
		2-SAVE				√	
	P-PHYSICAL IP††					√	√
		PIP GROUP††				√	√
LPRLOG	U-PAGE UP				√	√	√
	D-PAGE DOWN				√	√	√
LPROPC	SELECT S1-S3					√	√
	U-PAGE UP					√	√
	D-PAGE DOWN					√	√
	E-EXECUTE					√	√
	F-FUNCTION (incl. subfunctions)					√	√
	UNIT(S1), ST(S2), ECN(S3)					√	√
LPROPT	F-FUNCTION 1-DEFINE (incl. parameters)					√	
LPRPFK	PF1 thru PF12				√	√	
	F-FUNCTION	1-DEFINE			√	√	
		2-SAVE			√	√	
	U-PAGE UP			√	√	√	√
	D-PAGE DOWN			√	√	√	√
LPRPOL	F-FUNCTION	1-DEFINE				√	
		2-SAVE				√	
	E-EDIT	1-POLICY PROFILE			√	√	√
			S-SELECTED PROFILE		√	√	√
			P-PROFILE STATUS		√	√	√
			Parameters (PROFILE NAME, DATE, TIME, NO.,CLASS)			√	
		2-POLICY SCRIPT			√	√	√
			S-SELECTED SCRIPT NO.		√	√	√
			Parameters (SCRIPT NAME, PMC COMMAND, TARGET)			√	
	L-LIST	1-POLICY PROFILE LIST(incl. sub-functions)			√	√	√
		2-POLICY SCRIPT LIST(incl. sub-functions)			√	√	√
	EL-EDIT LINE				√	√	√
LPRRSC	L-LPAR				√	√	√
	F-FUNCTION		1-DEFINE/L			√	√
			2-SAVE			√	
	SRV					√	√
	TIM					√	√
	MSO, MSE, MSR					√	√
	ESO, ESE, ESR					√	√
LPRSSR	R-RECENT RECORDS			√	√	√	√
	E-ENTRY RECORDS			√	√	√	√
	U-PAGE UP			√	√	√	√
	D-PAGE DOWN			√	√	√	√
	RT-RIGHT			√	√	√	√
	LT-LEFT			√	√	√	√
	CM-CHANGE DISPLAY MODE			√	√	√	√

© COMPAREX Informationssysteme GmbH

Frame Code	Frame Command or Definition Field (Sheet 4 of 6)		Application by User Level			
			Op	AO	SP	CE
LPRSTR	(No object of user level restriction)					
LPRSUM	PERIOD (SEC)		√	√	√	√
LPRTIP	I-INSTRUCTIONS AND CONDITIONS (incl. parameters)				√	
	C-CONSOLE				√	
	T-TIME MACHINE OPTION				√	
	SP-SELECT PHYSICAL IP (incl. parameter)				√	
	F-FUNCTION 2-SAVE				√	
LPRTOD	L-LPAR (incl. parameters)			√	√	√
	F-FUNCTION	2-SAVE			√	
		N-NEW DATE/L		√	√	√
		L-LOCAL OFFSET/L		√	√	√
		T-TIME ACCELERATOR/L		√	√	
	LU-LPAR UP			√	√	√
	LD-LPAR DOWN			√	√	√
**	**					
	**					
	**					
	**					
SLPAC	G-OPERATION TYPE/C	1-STORE			√	
		3-INSTRUCTION			√	
	H-COMPARE ADDRESS/ DATA (incl. parameters)	1-STORE			√	
		3-INSTRUCTION			√	
	C-COMPARE STOP	1-ENABLED			√	
		2-DISABLED			√	
	SL-SELECT LOGICAL IP (incl. parameter)				√	
SLPAD	G-GENERAL REGISTERS				√	
	C-CONTROL REGISTERS				√	
	F-FLOATING POINT REGISTERS				√	
	P-CURRENT PSW			√	√	
	K-STORAGE KEYS				√	
	V-STORAGE VIRTUAL (PRI)				√	
	S-STORAGE VIRTUAL (SEC)				√	
	R-VIRTUAL:REAL (PRI)				√	
	E-VIRTUAL:REAL (SEC)				√	
	M-STORAGE REAL				√	
	T-PREFIX REGISTER				√	
	A-GENERAL/ACCESS REGISTER				√	
	B-STORAGE VIRTUAL (AR)				√	
	L-STORAGE VIRTUAL (ALET)				√	
	H-STORAGE VIRTUAL (HOME)				√	
	R-FPC REGISTER				√	
	U-PAGE UP				√	
	D-PAGE DOWN				√	
	SL-SELECT LOGICAL IP (incl. parameter)			√	√	

© COMPAREX Informationssysteme GmbH

Frame Code	Frame Command or Definition Field (Sheet 5 of 6)		Application by User Level			
			Op	AO	SP	CE
SLPDEF	D-CONFIGURATION DEFINITION			√	√	√
		MODE			√	√
		A		√	√	√
	D-CONF.-DEF. (cont.)	AP		√	√	√
		F		√	√	√
		IP		√	√	
		DEV#		√	√	
		PARM		√	√	
		VER			√	
		SER#			√	
	I-IP DEFINITION				√	√
		LIP count by mode			√	√
		PIP GRP			√	√
		ALT IP			√	√
	R-RESOURCE DEFINITION				√	√
		SRV			√	√
		TIM			√	√
		MSO, MSE, MSR			√	√
		ESO, ESE, ESR			√	√
	T-CONTROL DEFINITION			√	√	√
		WC			√	√
		RC			√	√
		IO			√	
		RF			√	
		IS			√	
		PR		√	√	√
		XL			√	
		AD			√	
		MF			√	√
		TM			√	
		TW			√	
		BR			√	√
		MD			√	√
		PL			√	
		PX			√	
	F-FUNCTION	2-SAVE			√	
		3-ACTIVATE/SL	√	√	√	√
		4-DEACTIVATE/SL		√	√	√
SLPDEV	F-DEFINE			√	√	√
	U-PAGE UP			√	√	√
	D-PAGE DOWN			√	√	√
	INPUT PHYSICAL DEV#			√	√	√
SLPMSG	PERIOD (SEC)		√	√	√	√
	LINES		√	√	√	√
	H or space (field preceding each message)		√	√	√	√
	SCP COMMAND =>		√	√	√	√

© COMPAREX Informationssysteme GmbH

Frame Code	Frame Command or Definition Field (Sheet 6 of 6)		Application by User Level			
			Op	AO	SP	CE
SLPOP	O-OPERATOR FUNCTION	2-RESTART/S		√	√	√
		3-SYSTEM RESET/S	√	√	√	√
		4-LOAD/S	√	√	√	√
		5-STORE STATUS/S		√	√	√
		6-SYSTEM RESET (CLEAR)	√	√	√	√
		7-LOAD (CLEAR)/S		√	√	√
		8-LPAR INITIALIZE		√	√	√
		9-LOAD (REWIND)/S		√	√	√
	L-LOAD (incl. parameters)	1-UNIT NO./S	√	√	√	√
		2-PARM	√	√	√	√
	R-RATE CONTROL/S	1-PROCESS			√	
		2-INSTRUCTION STEP			√	
	I-SET IC/S (incl. parameter)			√	√	
	T-START LOGICAL IP/S			√	√	√
	H-STOP LOGICAL IP/S			√	√	√
	SL-SEL. LOGICAL IP (incl. parameter)			√	√	√
SLPOPC	SELECT-S1, S2, S3				√	√
	U-PAGE UP				√	√
	D-PAGE DOWN				√	√
	E-EXECUTE				√	√
	F-FUNCTION (incl. subfunctions)				√	√
	UNIT(S1), ST(S2), ECN(S3)				√	√
SLPSTS	(No object of user level restriction)					
SLPSY	M-MODIFY LOAD PARAMETER (incl. parameter)		√	√	√	
	C-INITIALIZE SYSTEM CONTROL PROGRAM/S (incl. parameter)		√	√	√	
	D-INITIATE STANDALONE DUMP/S (incl. parameter)			√	√	
	P-PSW RESTART/S (incl. parameter)			√	√	
	E-EXECUTE		√	√	√	
	T-START LOGICAL IP/S			√	√	
	H-STOP LOGICAL IP/S			√	√	
	SL-SEL. LOGICAL IP (incl. parameter)			√	√	
**	**					
	**					
	**					

† Alteration disabled in VSF mode.
** Intentionally left blank.

© COMPAREX Informationssysteme GmbH

Table 5-5 User Level Restrictions on LPAR Control Commands

LPAR Control Command	**Application by User Level**			
	Op	**AO**	**SP**	**CE**
ACTIVATE	√	√	√	√
CALL	*	*	*	*
CANCEL	√	√	√	√
CG	√	√	√	√
**				
DEACTIVATE		√	√	√
LD	***	***	***	***
LU	***	***	***	***
MVSTOR			√	
PROTECT	√	√	√	√
**				
RETRIEVE	√	√	√	√
SAVE			√	
SELECT	√	√	√	√
SETIC		√	√	
SYSTEM CHP		√	√	√
SYSTEM ETAF		√	√	√
SYSTEM HCCFDUMP		√	√	√
SYSTEM INTERRUPT		√	√	√
SYSTEM IP		√	√	√
SYSTEM IPL	√	√	√	√
SYSTEM ISTEP			√	
SYSTEM LIPCNV	√	√	√	√
SYSTEM LIPOFF	√	√	√	√
SYSTEM LIPON	√	√	√	√
**				
SYSTEM RESET	√	√	√	√
SYSTEM RESTART		√	√	√
SYSTEM START		√	√	√
SYSTEM STOP		√	√	√
SYSTEM STORESTATUS		√	√	√
TOD		√	√	√
UNPROTECT	√	√	√	√

***Note** on Table 5-5:*

** Dependent on the target frame. Same as in selecting frames by commands on the LPRIDX frame.*
*** Intentionally left blank.*
**** Dependent on the subject frame. All levels on LPRCA; AO, SP, and CE on LPRCTL; all levels on LPRDEF; AO and SP on LPRICF; AO, SP, and CE on LPRIPN and LPRRSC; all levels on LPRSUM.*

© COMPAREX Informationssysteme GmbH

© COMPAREX Informationssysteme GmbH

6 LPAR OPERATION BASICS

6.1 Initial Setup

After power on, initial setup for LPARs proceeds with the following operations:

1. On each C2000-xxA, C2000-xxB, and C2000-xxC Model, set the CPU MODE to LPAR (C3) on the MODSEL frame (Figure 6-1). This step of the CPU mode setting is not required for the CF2000-0xA Models.
2. On each C2000-xxA Model, C2000-xxB Model, and C2000-xxC Model, select an SCDS for LPAR mode and specify that SCDS number using the "A-ACTIVE SCDS NO." function on the MODSEL frame (Figure 6-1). This step of the active SCDS selection is not required for the CF2000-0xA Models.
3. Execute SYSTEM INITIALIZE (SI) on the OPRCTL frame (SI, Enter, YES, Enter) as shown in Figure 6-2.

Note: *On the CF2000-0xA Models, the MODSEL frame is not available.*

© COMPAREX Informationssysteme GmbH

```
          1         2         3         4         5         6         7         8
12345678901234567890123456789012345678901234567890123456789012345678901234567890
 1                        * SCDS/CPU MODE SELECTION (MODSEL) *  96/12/18 17:46:42
 2
 3  C-CPU MODE                  SCDS LISTS
 4                                WP  NO.  NAME      TYPE   YY/MM/DD  HH:MM
 5   2-ESA/390(TM)              ( W ) A0   STANDARD  LPAR   96/12/01  00:00
 6  >3-LPAR                     ( W ) A1   STANDARD  LPAR   96/12/01  00:10
 7                              ( W ) A2   STANDARD  LPAR   96/12/01  01:00
 8                              ( W ) A3   STANDARD  LPAR   96/12/01  01:10
 9                              ( W ) A4   STANDARD  LPAR   96/12/01  02:00
10  A-ACTIVE SCDS NO.   : A0    ( W ) A5   STANDARD  LPAR   96/12/01  02:10
11
12
13  W-WRITE PROTECT     :
14  R-REL WRITE PROTECT :
15  S-SCDS/DF LISTS
16  NEXT OPERATION
17  Y-* PROCESSOR CONFIG
18  Z-* SYSTEM CONFIG
19
20  SELECTED CONFIG FILE NO.
21    = A0/C(CONFIGA0)
22                             ESA/390 IS A TRADEMARK OF IBM CORPORATION.
```

Figure 6-1 MODSEL on C000-xxA, C2000-xxB, or C2000-xxC

```
          1         2         3         4         5         6         7         8
12345678901234567890123456789012345678901234567890123456789012345678901234567890
 1                          * OPERATOR CONTROL (OPRCTL) *
 2
 3 O-OPERATOR FUNCTION       R-RATE CONTROL
 4  2-RESTART/S              >1-PROCESS
 5  3-SYSTEM RESET            2-INSTRUCTION STEP
 6  4-LOAD/S
 7  5-STORE STATUS/S         A-*ADDRESS COMPARE
 8  6-SYSTEM RESET(CLEAR)
 9  7-LOAD(CLEAR)/S          C-CHECK CONTROL
10  8-SYSIML CLEAR           >1-NO STOP
11    X-EXECUTE               2-STOP
12  9-LOAD(REWIND)/S
13                           I-SET IC/S
14
15 L-LOAD                                          ML-MLPF LOGOUT
16  1-UNIT NO.   0490
17  2-PARM.  ( 102      )                          SI-SYSTEM INITIALIZE
18                                                    YES-EXECUTE
19
20
21 S-SELECT IP 1
22
```

Figure 6-2 OPRCTL Frame

© COMPAREX Informationssysteme GmbH

6.2 Configuration Definition

In order to define configurations of LPARs after SYSIML clear, operations on the LPRCH, LPRCTL, LPRDEF, LPRIPN and LPRRSC frames are mandatory. Operations on the LPRCTL, LPRDEF, LPRIPN, and LPRRSC frames can be substituted by operation on the SLPDEF frame. In addition, if the target machine is equipped with an Integrated Cryptographic Facility (ICF) option, definition operation on the LPRICF frame is also mandatory. Operations on the LPROPT, LPRPFK, LPRPOL, and LPRTOD frames are optional (as necessary).

Briefly explained below are operations for mandatory configuration definitions. For the display images and the parameters, see chapter 7. Note that every definition operation requires an applicable user level as provided in chapter 5.

- LPRCH frame: Define configurations of all channel paths used by LPARs.
- LPRCTL, LPRDEF, LPRIPN, and LPRRSC frames: First, entering of “Lx” (x = LPAR number) or “LA” (for all LPARs) selects (an) LPAR(s) to be defined and causes “>” to appear on the left side of the corresponding LPAR number. Then, entering of “FI” enables configuration definition parameters to be entered. Finally, key input of configuration definition parameters followed by pressing of the Enter key executes validity check for the input parameters and, if the parameters prove to be valid, causes “>” to disappear; otherwise, the cursor will stop at an invalid parameter.
- SLPDEF frame: First, specify a target LPAR by the SELECT command (chapter 8). Then, specify the definition type by entering “D” (LPRDEF substitute), “I” (LPRIPN substitute), “R” (LPRRSC substitute), or “T” (LPRCTL substitute) to enable configuration definition parameters to be entered. Finally, key input of configuration definition parameters followed by pressing of the Enter key executes validity check for the input parameters. (If the parameters turn out to be invalid, the cursor will move to the position of an invalid parameter.) Repeat this operation for each definition type of each LPAR.
- LPRICF frame (when necessary): Define the Key Storage Unit configuration and the ICF-controlling parameters, which commonly apply to all LPARs.

© COMPAREX Informationssysteme GmbH

6.3 Activation

An LPAR can be activated automatically or manually.

6.3.1 Automatic Activation

When an SCDS storing an Auto-Activation-enabled LPAR has been selected for SYSIML clear, such LPAR is automatically (without operator's intervention) activated in the ascending order of the LPAR number or in the user-defined activation priority order after SYSIML clear.

When the automatic activation processing has started, the LPRDEF frame appears with "P" (pending) indicated for the status of a target LPAR. This pending status continues for approximately ten seconds showing the message "LPRM110I AUTO ACTIVATION IN PROCESS" on the frame. The operator can abort the activation processing for all LPARs by pressing the Esc key during the said message display.

Condition for enabling automatic activation

When LPAR definition information is stored into the LPAR Configuration File by the "SAVE" function available in the SP user level after the activation mode of the target LPAR is manually changed from Manual Activation (M) to Auto Activation (A) on the LPRDEF frame or on the SLPDEF frame.

Condition for disabling automatic activation

Unless the above-mentioned condition for enabling automatic activation is met, automatic activation is disabled by default.

Activation priority specifying

By specifying the sequence number in the two-digit "AP" field of the LPRDEF or SLPDEF frame in the AO, SP, or CE user level, the order of automatic activation will be established.
Specifying the autoactivation order must conform to the following rules:

- A smaller sequence number has a higher priority. A number can range from 1 thru 99.
- A number has a higher priority than a blank space.
- If the same number is specified to multiple LPARs, an LPAR with a smaller LPAR number or group number has a higher priority.
- If a blank space is specified to multiple LPARs, an LPAR with a smaller LPAR number or group number has a higher priority.

Note *on autoactivation behavior in MLPF 3.5.1 with old LPAR CONFIG file created in MLPF 3.1.2 or below: Since the Order field in the CONFIG file remains undefined, the Priority field setting is regarded as valid and the Activate First operation available in MLPF 3.1.2 or below takes place. Display on the LPRDEF or SLPDEF frame, however, appears as "1" in the AP field. The LPAR CONFIG file remains old until any Save operation is performed.*

6.3.2 Manual Activation

An LPAR can be manually activated by one of the operations given below in the Op, AO, SP, or CE user level. (See chapter 7 for the display images and the parameters of the relevant frames.)

LPRDEF frame operation

1. Call the LPRDEF frame.
2. Enter "Lx" (x = LPAR number) or "LA" (for all LPARs) to specify (an) LPAR(s) to be activated. Then, ">" will appear on the left side of the corresponding LPAR number.
3. Enter "F3" to activate the LPAR. Upon completion of activation, ">" will disappear and the LPAR status displayed in the STATUS(S) field will change from deactivated (D) to activated (A).

© COMPAREX Informationssysteme GmbH

SLPDEF frame operation

1. Enter the SELECT command and its operand (LPAR name or LPAR number) to specify an LPAR to be activated.
2. Call the SLPDEF frame.
3. Enter “F3” to activate the LPAR. Upon completion of activation, the LPAR status displayed in the STATUS field will change from deactivated (D) to activated (A).

SLPOP frame operation

1. Enter the SELECT command and its operand (LPAR name or LPAR number) to specify an LPAR to be activated.
2. Call the SLPOP frame.
3. Enter “O8” to activate the LPAR. Then, “>” will appear on the left side of “8-LPAR INITIALIZE” and remain displayed during activation. Upon completion of activation, “>” will disappear.

LPAR control command operation

Enter an LPAR name or an LPAR number as an operand of the ACTIVATE command.

6.3.3 Operation in Response to Activation Message

In the event that a message prompting the operator to refer details on the LPRSSR frame appears at the end of the activation process, call the LPRSSR frame and confirm the contents.

Figure 6-3 below shows an example of the LPRSSR frame texts in response to warning-level message IDs LPRL335W, LPRL329W, LPRL330W, and LPRL331W.

```
YY/MM/DD HH:MM:SS SSR                       DATA                                G L# C
97/01/15 23:01:43 LPRL335I : ACT COMPLETED. SEE LPRSSR FRAME ABOUT DETAIL.
97/01/15 23:01:39 CHPID=B0,B1,B5,F5
97/01/15 23:01:36 CHPID=10,11,15,16,19,28,39,49,59,69,79,7B,89,8B,9A,9C
97/01/15 23:01:32 LPRL329W : CH TYPE MISMATCH EXISTS IN CONF. CHP COUNT: 20      3 0
97/01/15 23:01:24 CHPID=13,B2,C5,D5
97/01/15 23:01:17 LPRL330W : FAILING CH EXISTS IN CONF. CHP COUNT: 4             3 0
97/01/15 23:00:58 LPRL331W : ALLOCATED TO PIP WITH TIME MACHINE ENABLED.        3 0
97/01/15 23:00:55 ACT L=3
```

Figure 6-3 Sample LPRSSR Frame Texts in Response to Warning Messages

© COMPAREX Informationssysteme GmbH

6.4 System Operation

6.4.1 System Operation Using LPAR Frames

System operations on activated LPARs (e.g., OS IPL, reset and alteration/display of logical MS) use LPAR frames in applicable user levels. As shown below, all the system operation frames in Basic mode (given in parentheses) are replaced with comparable LPAR frames.

- SLPAC frame (ADRCMP frame)
- SLPAD frame (ALTDSP frame)
- SLPMSG frame (OPRMSG frame)
- SLPOP frame (OPRCTL frame)
- SLPSY frame (SYSCTL frame)

These frames are effective only to the target LPAR (specified by the SELECT command). The selected LPAR name and LPAR number are displayed in the leftmost position of the first line on each SLPxxx frame. (See chapter 7 for the display images and the functions.)

SLPAC frame

The operation method for the SLPAC frame is the same as for the ADRCMP frame in Basic mode. However, the following functions are not supported on the SLPAC frame:

- Address comparison on store to MS or fetch from MS by the selected IOP
- Absolute address compare stop on store to MS or fetch from MS by the selected IP
- Logical address compare stop on fetch from MS by the selected IP

SLPAD frame

In functionality and operation method, the SLPAD frame is the same as the ALTDSP frame in Basic mode.

SLPMSG frame

In functionality and operation method, the SLPMSG frame is the same as the OPRMSG frame in Basic mode except that the SLPMSG frame also provides a means to operate the Highspeed Coupling Control Feature (HCCF).

SLPOP frame

The operation method for the SLPOP frame is the same as for the OPRCTL frame in Basic mode. However, the following functions are different:

- The “LPAR INITIALIZE” (O8) function is different from the “SYSIML CLEAR” function in Basic mode and is used to activate a specified LPAR.
- If the “INSTRUCTION STEP” (R2) is specified, the Program Event Recording (PER) function on the specified LPAR is invalidated. (No PER interruption will occur even if a PER event arises.)

SLPSY frame

In functionality and operation method, the SLPSY frame is the same as the SYSCTL frame in Basic mode.

6.4.2 System Operation Using LPAR Control Commands

Part of the system operations on LPAR frames can also be executed by LPAR control commands as described and exemplified below. Note that every LPAR control command requires an applicable user level as provided in chapter 5.

© COMPAREX Informationssysteme GmbH

IPL (initial program loading)

```
SYSTEM IPL,L=PROD,UNIT=0640,P=1,LOADPARM=102
```
Performs IPL of the LPAR named PROD from the device number 640 to the logical IP of the CPU address 1, using the load parameter 102.

System reset and system clear reset

```
SYSTEM RESET,L=PROD,CLEAR
```
Performs a system clear reset for the LPAR named PROD.

Logical IP start

```
SYSTEM START,L=PROD,P=1
```
Starts the logical IP of the CPU address 1 allocated to the LPAR named PROD.

Logical IP stop

```
SYSTEM STOP,L=PROD,P=ALL
```
Stops all the logical IPs allocated to the LPAR named PROD.

Restart interruption to logical IP

```
SYSTEM RESTART,L=PROD,P=1
```
Causes a restart interruption to the logical IP of the CPU address 1 assigned to the LPAR named PROD.

Store status

```
SYSTEM STORESTATUS,L=PROD,P=1
```
Performs a store status operation to the logical IP of the CPU address 1 allocated to the LPAR named PROD.

Enabling/disabling of instruction step mode

```
SYSTEM ISTEP,ON,L=PROD,P=1
```
Enables the instruction step mode for the logical IP of the CPU address 1 allocated to the LPAR named PROD.

Instruction counter setting for logical IP

```
SETIC IC=00000100,L=PROD,P=1
```
Stores “00000100” into the instruction counter of the logical IP of the CPU address 1 allocated to the LPAR named PROD.

External interruption to logical IP

```
SYSTEM INTERRUPT,L=PROD,P=1
```
Causes an external interruption to the logical IP of the CPU address 1 allocated to the LPAR named PROD.

© COMPAREX Informationssysteme GmbH

6.5 Deactivation

An LPAR can be deactivated by one of the operations given below in the AO, SP, or CE user level. See chapter 7 for the display image and the parameters of the relevant frames.

⚠ CAUTION

Deactivation of an LPAR would mean powering off of a processor complex in Basic mode. Pay extreme attention to this deactivation operation.

LPRDEF frame operation

1. Call the LPRDEF frame.
2. Enter “Lx” to specify an LPAR to be deactivated. Then, “>” will appear on the left side of the corresponding LPAR number.
3. Enter “F4” to deactivate the LPAR. Upon completion of deactivation, “>” will disappear and the LPAR status displayed in the STATUS(S) field will change from activated (A) to deactivated (D).

SLPDEF frame operation

1. Enter the SELECT command and its operand (LPAR name or LPAR number) to specify an LPAR to be deactivated.
2. Call the SLPDEF frame.
3. Enter “F4” to deactivate the LPAR. Upon completion of deactivation, the LPAR status displayed in the STATUS field will change from activated (A) to deactivated (D).

LPAR control command operation

Enter LPAR name or an LPAR number as an operand of the DEACTIVATE command.

© COMPAREX Informationssysteme GmbH

6.6 Reconfiguration

Resources once allocated to an LPAR can be re-allocated/reconfigured to another LPAR without SYSIML clear, depending on the user level and the activated or deactivated status of LPARs as shown in Table 6-1. Detailed in sections 6.6.1 thru 6.6.3 is reconfiguration of processor storage (MS and ES), IPs, and channel paths.

Table 6-1 Changeability of LPAR configuration Definition Items

(Sheet 1 of 2)

Definition Frame	Definition Item		User Level				Changeability of Defined Value	
			Op	AO	SP	CE	Deactivated	Activated
LPRDEF or part of SLPDEF	Operating mode				√	√	YES	NO
	Activation priority			√	√	√	YES	NO
	Auto Activation option			√	√	√	NO	YES
	MS size				√	√	YES	NO
	ES size				√	√	YES	NO
	Auto IPL option			√	√	√	YES*†	YES*†
		IPL CPU address		√	√		YES*†	YES*†
		IPL device number		√	√		YES*†	YES*†
		IPL load parameter		√	√		YES*†	YES*†
	CPU ID	Ver. code**			√		YES*	NO
		Ser. No.			√		YES*	NO
LPRRSC or part of SLPDEF	Service ratio				√	√	YES	YES
	Time-slice value				√	√	YES	YES
	MS origin				√	√	YES†	NO
	MS extent				√	√	YES†	NO
	Reserved MS size				√	√	YES†	NO
	ES origin				√	√	YES†	NO
	ES extent				√	√	YES†	NO
	Reserved ES size				√	√	YES†	NO
LPRCTL or part of SLPDEF	Wait Completion				√	√	YES†	YES†
	Resource Capping				√	√	YES	YES
	SCDS Access Enable and DRM				√		YES†	YES†
	RMF				√		YES†	YES†
	Isolate				√		YES*	YES*
	Protected LPAR			√	√	√	YES	YES
	Dynamic LPAR Reconfiguration				√		YES*†	YES*†
	ADMF***				√		YES*†	NO
	ICMF				√	√	YES†	NO
	Time Machine***				√		YES*†	NO
	Time Warp***				√		YES*†	NO
	Alarm Bell				√	√	YES*†	YES*
	MDC Enable				√	√	YES*†	NO
	Policy Diagnose				√		YES*†	YES*†
	PMC Command				√		YES*†	YES*†
LPRIPN or part of SLPDEF	Logical IP count by mode				√	√	YES	NO
	Physical IP group scheduling or Virtual Server number to LPAR				√	√	YES	NO
	Alternate Processor availability				√	√	YES	YES
	Service ratio				√	√	YES	YES

© COMPAREX Informationssysteme GmbH

(Sheet 2 of 2)

Definition Frame	Definition Item		User Level				Changeability of Defined Value	
			Op	AO	SP	CE	Deactivated	Activated
LPRIPN (cont.)	Physical IP group scheduling to physical IP††				√	√	YES	YES
LPRCH	Online/offline			√	√	√	NO	YES*†
	CHPID-LPAR#[/SHARED]				√	√	YES*	YES*
LPRICF‡	Key Storage Unit			√	√		YES*	NO
	Key entry			√	√		YES*†	YES*†
	Special Secure mode			√	√		YES*†	YES*†
	ICF Enable			√	√		YES*†	YES*†
	ICF time-slice value			√	√		YES	YES
	CDX Bit Map (0–15)			√	√		All YES*†	All NO
LPROPT	Auto Save				√		YES	YES
	SYSACT Partition				√		YES	YES
	Confirmation				√		YES	YES
	Policy error skip				√		YES	YES
LPRPFK	PF key text			√	√		YES	YES
LPRPOL	Policy Profile	Profile number		√	√	√	YES	YES
		Profile name			√		YES	YES
		Profile status		√	√	√	YES	YES
		Profile class			√		YES	YES
		Date/event, Time, No.			√		YES	YES
	Policy Script	Script number		√	√	√	YES	YES
		Script name			√		YES	YES
		PMC command			√		YES	YES
		Target LPAR			√		YES	YES
LPRTOD	LPAR Local TOD setting			√	√	√	NO	YES
	LPAR Local Offset setting			√	√	√	YES†	YES†
	LPAR Local TOD/Offset enable			√	√	√	YES†	YES†
	Time Accelerator enable			√	√		NO	YES†
	Acceleration multiplying factor			√	√		NO	YES†
‡‡								

* Ignored and treated as NO on an LPAR in HCF mode.
*** Not available of CF2000-0xA Models.
† Ignored and treated as NO on an LPAR in Dummy mode.
†† Not available in VSF mode, nor on IP definition part of SLPDEF frame.
‡ Available only on ICF-installed processor models (C2000-xxA, and C2000-xxB).
‡‡ Intentionally left blank.

6.6.1 Main Storage and Expanded Storage

Static reconfiguration

In static reconfiguration of main storage (MS) or expanded storage (ES) allocated to an LPAR, the SP or CE user level and a contiguous area are required. In Real MS Capacity Expansion mode, an MS or ES size must be specified on model-dependent unit size boundary. Otherwise, an MS or ES size can be specified on 1-M-byte boundary.

© COMPAREX Informationssysteme GmbH

When the size of MS or ES allocated to an LPAR is to be changed, the corresponding LPAR must be placed in the deactivated status. Besides, depending on the allocation status of MS or ES, not only the corresponding LPAR but also another LPAR must be deactivated as exemplified below.

Example (Figure 6-4): To allocate the 50-M-byte free area (shaded portion in Status l) additionally to the LPAR “TEST1,” both the LPAR “TEST1” and the LPAR “TEST2” must be deactivated temporarily. The LPAR “PROD” need not be deactivated.
The procedure is as follows:

1. Deactivate the LPAR “TEST1” (Status 2). At this moment, the total size of the free areas is 150 M bytes, but the maximum size of a contiguous free area is 100 M bytes. Hence, the LPAR “TEST1” cannot use 150 M bytes.
2. Deactivate the LPAR “TEST2” (Status 3). Now the total size of a contiguous free area is 200 M bytes. Specify 150 M bytes for the LPAR “TEST1” on the LPRDEF, LPRRSC or SLPDEF frame (chapter 7). If necessary, specify the MS origin on the LPRRSC or SLPDEF frame.
3. Activate both the LPAR “TEST1” and the LPAR “TEST2” (Status 4).

Note: *When an LPAR with no MS origin defined is activated, the Hypervisor checks the free MS areas for the smallest available gap where this LPAR can fit in, and allocates the area from the highest address. This gap includes the reserved MS of other activated LPARs.*

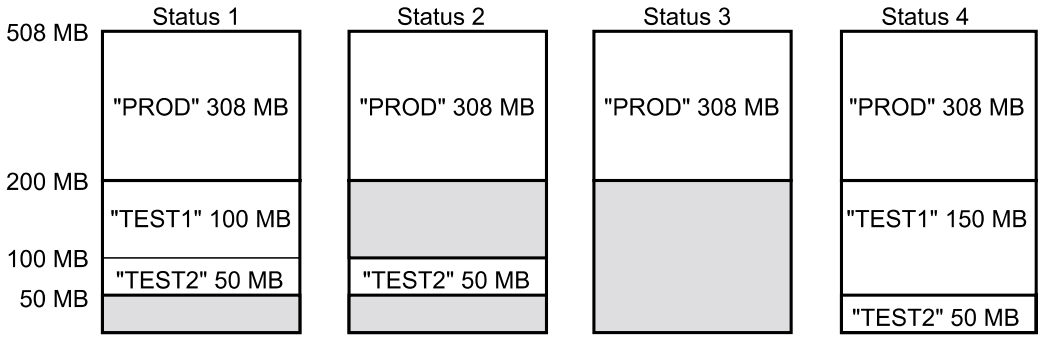

Figure 6-4 Example of Static Reconfiguration of MS

Dynamic connection/disconnection of MS

Dynamic connection/disconnection of MS is supported on an LPAR in the activated status, and is implemented in such a manner that all or part of the Reserved MS area (MSR) for the target LPAR is dynamically enabled/disabled by the OS command. In Real MS Capacity Expansion mode, an MS size must be specified on model-dependent unit size boundary. Otherwise, an MS size can be specified on 1-M-byte boundary.

Regardless of physical total MS size, dynamic connection/disconnection of MS is executed by the MVS/ESA system command “CF STOR(E=1),ON” or “CF STOR(E=1),OFF” (E: Storage Element ID). Specifying “I” for the Storage Element ID selects the MSR in entirety to be dynamically connected/disconnected. When more than 2 GB physical total MS is installed, dynamic connection/disconnection of MS can also be executed by the following MVS/ESA system commands:

- “CF STOR(nnnM),ON” or “CF STOR(nnnM),OFF” (nnn: MS size on model-dependent unit size boundary)
- “CF STOR(xxxM–yyyM),ON” or “CF STOR(xxxM–yyyM),OFF” (xxx and yyy: start address and end address on model-dependent unit size boundary).

The following must be noted:

- Prerequisite to this operation is specifying of the MS origin (MSO) and the MSR on the LPRRSC or SLPDEF frame (chapter 7) in the SP or CE user level while the subject LPAR is in the deactivated status.
- In case the Reserved MS area to be allocated for the subject LPAR is already used by another LPAR in the activated status, the dynamic MS connection/disconnection action will be aborted. To avoid the case, ensure on the LPRSTR frame (chapter 7) the status of MS allocation to the LPARs in the activated status.

© COMPAREX Informationssysteme GmbH

- If the RESET CLEAR or LOAD CLEAR command is executed to the MS-dynamically-connected LPAR, the Reserved MS area dynamically connected will be disconnected.

Dynamic relocation of MS

MS area of an LPAR is dynamically relocated by the LPAR control command MVSTOR, available in the SP user level, on an LPAR in the activated status. In Real MS Capacity Expansion mode, an MS size must be specified on model-dependent unit size boundary. Otherwise, an MS size can be specified on 1-M-byte boundary.

The following must be noted:

- As a result of the MVSTOR command execution, the CMSO setting on the LPRSTR frame (chapter 7) will change. However, note that the MSO setting on the LPRRSC or SLPDEF frame (chapter 7), which is saved in the configuration file, will not change.
- If the LPAR dynamically relocated of MS area is deactivated and then activated, a new MS area will be assigned as defined by the MSO on the LPRRSC frame. If the MSO has not been defined, a new MS area will be automatically assigned (randomized) by the MLPF Hypervisor.

Dynamic connection/disconnection of ES

Dynamic connection/disconnection of ES is supported on an LPAR in the activated status. In Real MS Capacity Expansion mode, an ES size must be specified on model-dependent unit size boundary. Otherwise, an ES size can be specified on 1-M-byte boundary.

The function is executed by the MVS/ESA system command "CF ESTOR(E=n),ON" or "CF ESTOR(E=n),OFF" (E: ES Element ID). Specifying "0" for the ES Element ID selects the initially-defined ES size (ESE on the LPRDEF, LPRRSC or SLPDEF frame) to be dynamically connected/disconnected; however, if the ESE value is zero, the Reserved ES size (ESR on the LPRRSC or SLPDEF frame) will be selected for dynamic connection/disconnection. Specifying "1" for the ES Element ID is accepted unless the ESE is zero, and selects the reserved ES size (ESR on the LPRRSC or SLPDEF frame) to be dynamically connected/disconnected. (See chapter 7 for the LPRDEF, LPRRSC and SLPDEF frames.)

The following must be noted:

- Prerequisite to the above-mentioned operation is specifying of the ES origin (ESO) and the ESR on the LPRRSC or SLPDEF frame in the SP or CE user level while the subject LPAR is in the deactivated status.
- In case the Reserved ES area to be allocated for the subject LPAR is already used by another LPAR in the activated status, the dynamic ES connection/disconnection action will be aborted. To avoid the case, ensure on the LPRSTR frame (chapter 7) the status of ES allocation to the LPARs in the activated status.
- Even if a system clear reset is executed to the ES-dynamically-connected LPAR, the Reserved ES area dynamically connected will remain unchanged.

Dynamic reconfiguration of MS/ES by means of FAR

Floating Address Register (FAR) implements dynamic reconfiguration of main storage or expanded storage on physically non-contiguous locations. FAR utilizes Dynamic Address Translation (DAT) which translates physical storage addresses to absolute storage addresses, thus enabling all definitions relating to LPAR storage resources to be treated within the absolute address space. The size of such absolute address space depends on the size and the number of FARs, and is usually larger than the physically-allocated storage size. The unit size of FAR-based storage assignment on each LPAR is model-dependent.

6.6.2 Instruction Processors

The following are precautions for reconfiguration of the Instruction Processors (IPs) and alteration of their scheduling modes:

- For a logical IP, reconfiguration and alteration of scheduling mode is available only in the SP or CE user level and when the corresponding LPAR is deactivated.

© COMPAREX Informationssysteme GmbH

- For a logical IP, alteration of scheduling mode without reconfiguration is available dynamically by the LPAR control command “SYSTEM LIPCNV” along with the operations of logical IP offline and logical IP online.
- Scheduling modes of physical IPs are automatically and dynamically determined by the setting of logical IPs. Manual reconfiguration or alteration of the physical IP scheduling mode is not directly available.

A logical IP allocated to an LPAR under the MVS/ESA operating system can be reconfigured by entering the system command “CF CPU(n),ON” or “CF CPU(n),OFF” (n: logical CPU address) on the SLPMSG frame (chapter 7) or on an MVS console.

In addition, the following must be noted:

- If the RESET CLEAR or LOAD CLEAR command is executed to the reconfigured logical IP, the current configuration of the logical IP will be reverted to the original configuration when it was activated.
- The physical IP scheduling mode of an HCCF-LPAR to which a CFR channel is connected must be set to dedicated mode. Otherwise, severe degradation of parallel sysplex performance will result.

6.6.3 Channel Paths

A channel path can be reconfigured among LPARs other than ICMF-specified HCCF-LPARs through the procedure given below with the SP or CE user level.

1. Place a target channel path into the offline status by any of the following operations:
   - Enter “-” in the “ONLINE” field on the LPRCH frame (chapter 7).
   - Enter the LPAR control command “SYSTEM CHP OFF=nn” (nn: CHPID).
   - Enter the system command “CF CHP(nn),OFFLINE” (nn: CHPID) on the SLPMSG frame (chapter 7) or on an MVS console, if the channel path is allocated to an LPAR running under the MVS/ESA operating system.
2. Switch the LPAR allocated to the channel path by entering the LPAR number in the “LPAR NUMBER” field on the LPRCH frame.
3. Place the channel path into the online status by any of the following operations:
   - Enter “+” in the “ONLINE” field on the LPRCH frame (chapter 7).
   - Enter the LPAR control command “SYSTEM CHP ON=nn” (nn: CHPID).
   - Enter the system command “CF CHP(nn),ONLINE” (nn: CHPID) on the SLPMSG frame (chapter 7) or on an MVS console, if the channel path is allocated to an LPAR running under the MVS/ESA operating system.

Note: *The channel path to be reconfigured should be Reconfigurable-specified. Reconfigurable channel paths have the display “R” in the “RECONFIG” field on the LPRCH frame (chapter 7).*

© COMPAREX Informationssysteme GmbH

6.7 Protection

Operations to a specific LPAR (such as configuration definition and IPL) can be suppressed by means of the protection function.

Operations for specifying of protection and unprotection

- To protect an LPAR, enter the LPAR control command “PROTECT L=name” (name: LPAR name or LPAR number) in the Op, AO, SP, or CE user level, or specify “Y” in the “PR” field of the LPRCTL frame in the AO, SP, or CE user level.
- To unprotect an LPAR, enter the LPAR control command “UNPROTECT L=name” (name: LPAR name or LPAR number) in the Op, AO, SP, or CE user level, or specify “N” in the “PR” field of the LPRCTL frame in the AO, SP, or CE user level.

Operations suppressed with protection specified

- All the LPAR control commands with the LPAR name or the LPAR number specified for their operands except UNPROTECT command.
- Operations for the protected LPAR on LPRxxx frames.
- All operations for the protected LPAR on SLPxxx frames (although calling of these frames remains effective).

6.8 Special Key Functions

The following special key functions are different from those in Basic mode:

- Inter: Has no effect. To cause an external interruption to a specific LPAR, use the LPAR control command “SYSTEM INTERRUPT.”
- PA1: Has the same function as the LPAR control command “RETRIEVE.”
- Start: Returns all LPARs to the start state simultaneously. To operate an LPAR, it must be placed in the start state.
- Stop: Places all LPARs into the stop state simultaneously. The stop state means that not only logical IPs are stopped but also every operation with respect to LPARs is disabled. To stop the logical IP of a specific LPAR, use the LPAR control command “SYSTEM STOP.”
- TOD Clock: Has no effect. Every LPAR is always enabled for the TOD update.

6.9 Indicator Area Messages

In LPAR mode, the display of the PSW (“IPn:X … X” in Basic mode) is not available (“IPn:RUNNING” instead). The PSW display appears when the physical IP enters a manual state or an interruption-inhibited wait state. (The PSW display does not appear when a logical IP enters a manual state or an interruption-inhibited wait state.)

Other messages in the indicator area remain unchanged between Basic mode and LPAR mode except on the CF2000-0xA Models. The CF2000-0xA Models do not display the PSW and IP statuses in the indicator area.

© COMPAREX Informationssysteme GmbH

6.10 Time Machine

To solve the year 2000 problem, three hardware facilities collectively called Time Machine are implemented in MLPF 3.5.1 as standard. See chapter 2 for individual functions of these facilities.

- LPAR Local TOD Facility
- Time Machine Facility
- Time Warp Facility

Operation of LPAR Local TOD Facility

The LPAR Local TOD Facility specifies the TOD clock setting for a specific LPAR by the LPAR TOD Clock (LPRTOD) frame functions available in the AO, SP, or CE user level. Normally, the TOD clock setting on the LPRTOD frame should be specified before IPL of the target LPAR because operation on this frame while the OS is running on that LPAR does not guarantee the OS operation.

Shown below is how to activate and use the LPAR Local TOD Facility. See chapter 7 for the display images and the parameters of the relevant frame. The whole procedure requires the AO, SP, or CE user level.

⚠ CAUTION

Do not use LPAR Local TOD Facility on any LPAR configured in a sysplex. Such use affects the entire sysplex and the result is unpredictable.

1. Using the ACTIVATE command, activate an LPAR to utilize the LPAR Local TOD Facility. (Such LPAR is hereafter called the Local TOD LPAR.)
2. Using the LPRTOD frame, set the TOD value of the Local TOD LPAR to a desired one, e.g., “2000/01/01” for January the 1st, 2000. Specify “Y” in the OEN field to enable the setting.
3. IPL the operating system.

Operation of Time Machine Facility

Shown below is how to activate and use the Time Machine Facility. See chapter 7 for the display images and the parameters of the relevant frames. The whole procedure requires the SP user level.

⚠ CAUTION

Enabling of Time Machine Facility causes a serious degradation of the Instruction Processor performance. Therefore, this facility should only be enabled on a specific physical IP and a specific LPAR assigned to that IP.

1. Specify an LPAR to utilize the Time Machine Facility. (Such LPAR is hereafter called Time Machine LPAR.) Specifically, the TM field is provided on the LPRCTL frame and the SLPDEF frame for the Time Machine Facility. Specify “Y” in that field of the target LPAR while the LPAR is in the deactivated status.

   Note: *On the LPRCTL frame and the SLPDEF frame, the TW field is also provided for the Time Warp Facility. Specify “Y” in that field of the target LPAR, if the Time Warp Facility is to be used after the Time Machine Facility.*

2. Specify the target physical IP(s), using the LPRTIP (LPAR Time Machine IP Definition) frame provided for support of the Time Machine Facility. Specifically, call that frame (“N” on the LPRIDD frame or “CALL LPRTIP” from any frame) and do the following:

   a) Using the frame command “SP-SELECT PHYSICAL IP,” specify the target physical IP number(s) corresponding to the Time Machine LPAR. If the Time Machine LPAR assigns multiple physical IPs, this operation as well as steps b and c below must be repeated on all such physical IPs.

   b) Using the frame command “T-TIME MACHINE OPTION,” specify “Y” to the target physical IP.

   c) Using the frame command “I-INSTRUCTIONS AND CONDITIONS,” set the trapping conditions for the facility’s special filter (hereafter called “microfilter”) used in tracing of user programs.

      Note: *The microfilter setting can be changed even while the Time Machine LPAR is activated.*

© COMPAREX Informationssysteme GmbH

3. Call the LPRRSC frame and specify a Reserved MS area for the Time Machine LPAR to store trace records. Consequently, conventional usage of the Reserved MS area (MS reallocation) is not available to the Time Machine LPAR.
4. Using the ACTIVATE command, activate the Time Machine LPAR.
5. Using the LPRTOD frame, set the TOD value of the Time Machine LPAR to a desired one, e.g., “2000/01/01” for January the 1st, 2000.
6. IPL the operating system and run user programs to be inspected by the Time Machine Facility.
7. Using a separate program product called Time Machine Utility, edit and print the trace records stored in the Reserved MS area of the Time Machine LPAR. Refer to *Time Machine Utility Manual* for details.

Operation of Time Warp Facility

Shown below is how to activate and use the Time Warp Facility. See chapter 7 for the display images and the parameters of the relevant frames. The whole procedure requires the SP user level.

⚠ CAUTION

Because user program may use the invalid operation code in normal process, Time Warp Facility should be used only on a specific LPAR.

1. Specify an LPAR to utilize the Time Warp Facility. (Such LPAR is hereafter called Time Warp LPAR.) Specifically, the TW field is provided on the LPRCTL frame and the SLPDEF frame for the Time Warp Facility. Specify “Y” in that field of the target LPAR while the LPAR is in the deactivated status.

   Note: *On the LPRCTL frame and the SLPDEF frame, the TM field is also provided for the Time Machine Facility. Specify “Y” in that field of the target LPAR beforehand, if the Time Machine Facility is to be used before the Time Warp Facility.*
2. Using the ACTIVATE command, activate the Time Warp LPAR.
3. Using the LPRTOD frame, set the TOD value of the Time Warp LPAR to a desired one, e.g., “2000/01/01” for January the 1st, 2000.
4. IPL the operating system.
5. Based on trace records of the Time Machine Facility, apply appropriate Warp instructions to the user programs checked out by the Time Machine Facility. Thereafter, rerun the user programs and ensure that the year 2000 problem is solved. Refer to *Time Machine Utility Manual* for details.

© COMPAREX Informationssysteme GmbH

6.11 Time Accelerator

Functional overview

Time Accelerator accelerates counting-up of the TOD and the CPU timer for a specific LPAR by the LPAR TOD Clock (LPRTOD) frame functions available in the AO or SP user level.

⚠ CAUTION

Do not use Time Accelerator on any LPAR configured in a sysplex. Such use affects the entire sysplex and the result is unpredictable.

Operation

Shown below is how to activate and use Time Accelerator. See chapter 7 for the display images and the parameters of the relevant frame. The whole procedure requires the AO or SP user level.

1. Using the ACTIVATE command, activate an LPAR to utilize Time Accelerator. (Such LPAR is hereafter called the Time Accelerator LPAR.)
2. Using the LPRTOD frame, set the TOD value of the Time Accelerator LPAR to a desired one, e.g., “2000/01/01” for January the 1st, 2000. Specify “Y” in the TA field and an acceleration multiplying factor (1–99 in decimal) in the AMLT field to enable Time Accelerator.
3. IPL the operating system.

***Notes** on usage*:

- *Processing of Time Accelerator on an LPAR running in ETR (External Timer Reference) mode does not recover from an ETR failure (e.g., ETR synchronization check). The result is unpredictable.*
- *Enabling of Time Accelerator under any of the following conditions may sometimes cause the OS to hang up:*
  - *Time Accelerator is enabled after the OS is IPLed.*
  - *Time Accelerator is enabled with the multiplying factor of 11 or more, and then the OS is IPLed.*
  - *Time Accelerator is enabled with the multiplying factor of 10 or less, then the OS is IPLed, and thereafter the multiplying factor is altered to 31 or more.*

Recommendations

In order to avoid the potential OS hang-up mentioned above, the following procedure and configuration are recommended:

- Recommended procedure: Enable Time Accelerator with the multiplying factor of 2 thru 10, then IPL the OS, and thereafter alter the multiplying factor to 2 thru 30.
- Recommended configuration:
  - MS: 256 MB or more
  - ES (if installed): 256 MB or more
  - OS parameter of MIH: 30 minutes
  - OS parameter of LOCKOUT: 15000 (defined by MASDEF statement)

© COMPAREX Informationssysteme GmbH

© COMPAREX Informationssysteme GmbH

7 LPAR FRAME DETAILS

This chapter provides detailed functions of each LPAR frame, appearing here in alphabetical order of the frame code. An input area is indicated as an underlined portion (definition field) in the subsequent figures.

Every function of a frame command is displayed as “x-yyyyyyyy” on each frame. If the frame command has any subfunction, “n-zzzzzzzz” will be displayed under the main function.

- x: Function ID in one or two alphabetic characters indicating the first letter(s) of a frame command.
- yyyyyyyy: Function name.
- n: Subfunction ID in one numeric character. To be entered together with the function ID. Not displayed if the frame command has no subfunction.
- zzzzzzzz: Subfunction name.

To enter a frame command, type a function ID (followed by a subfunction ID, if any, with no preceding space) in the command input line (line 24, omitted in the subsequent figures), and then press the Enter key.

If a processor complex is (capable of and) running in 2-IOCDS mode (LPAR/EX mode), almost every LPAR frame displays the paired SCDS number, the LPAR Group number and the number of activated LPARs in the second line. Such display available only in 2-IOCDS mode is indicated in ***bold italic*** texts in the subsequent figures.

Note: *Every frame command and definition field input requires an applicable user level as provided in chapter 5.*

© COMPAREX Informationssysteme GmbH

7.1 LPRCA Frame

The LPRCA frame displays channel paths in LPAR mode, including display of LPAR number assignment to each channel path. Figures 7-1 thru 7-2 illustrate the frame images by processor model. Tables 7-1 and 7-2 describe the frame commands and the display fields.

```
          1         2         3         4         5         6         7         8
12345678901234567890123456789012345678901234567890123456789012345678901234567890
 1 LPAR  1 : LPAR0001  LPAR CHANNEL ASSIGNMENT        (LPRCA)  YY/MM/DD HH:MM:SS
 2 SCDS    : A0
 3               -------------------- CHPID --------------------
 4 LPAR LIST     00 01 02 03 04 05 06 07 08 09 0A 0B 0C 0D 0E 0F
 5  NO NAME      -------------------- STATUS -------------------  MODE  ST
 6   1 LPAR0001   7 +S -S +U -U +U -U  *  2 -U +S  *  5 -U  7 11  ESA    A
 7   2 LPAR0002   7 +S -S  1 -U  .  .  * +U -U +S  *  5 -U  7 11  ESA    D
 8   3 LPAR0003   .  .  .  .  .  .  .  *  .  .  .  *  .  .  .  .  HCF    D
 9   4 LPAR0004   7 +S -S  1 -U  .  .  *  2 -U +S  *  5 -U  7 11  ESA    D
10   5 LPAR0005   7 +S -S  1 -U  .  .  *  2 -U +S  * +U -U  7 11  ESA    D
11   6 LPAR0006   7 +S -S  1 -U  .  .  *  2 -U +S  *  5 -U  7 11  ESA    D
12   7 LPAR0007  +U  .  .  .  .  .  .  *  .  .  .  *  .  . +U 11  ESA    D
13   8 LPAR0008   7  .  .  .  .  .  .  *  .  .  .  *  .  .  7 11  ESA    D
14   9 LPAR0009   7  .  .  .  .  .  .  *  .  .  .  *  .  .  7 11  ESA    D
15  10 LPAR0010   7  .  .  .  .  .  .  *  .  .  .  *  .  .  7 11  DMY    D
16
17 U-PAGE UP  D-PAGE DOWN
18 S-STATUS VIEW   > 1-ONLINE UNSHARED (+U)   > 5-AVAILABLE OFFLINE UNSHARED (-U)
19                 > 2-ONLINE SHARED   (+S)   > 6-LP NOT IN RCNF ACCESS LIST ( .)
20                 > 3-OFFLINE SHARED  (-S)   > 7-UNSHARED,ASSIGNED TO LP#   (NN)
21                 > 4-NOT DEFINED     ( *)
22
```

```
          1         2         3         4         5         6         7         8
12345678901234567890123456789012345678901234567890123456789012345678901234567890
 1 LPAR  1 : LPAR0001  LPAR CHANNEL ASSIGNMENT        (LPRCA)  YY/MM/DD HH:MM:SS
 2 SCDS    : A0
 3               -------------------- CHPID --------------------
 4 LPAR LIST     00 01 02 03 04 05 06 07 08 09 0A 0B 0C 0D 0E 0F
 5  NO NAME      -------------------- STATUS -------------------  MODE  ST
 6  11 LPAR0011   7 +S -S +U -U +U -U  *  2 -U +S  *  5 -U  7 +U  ESA    A
 7  12 LPAR0012   7 +S -S  1 -U  .  .  * +U -U +S  *  5 -U  7 11  ESA    D
 8  13 LPAR0013   .  .  .  .  .  .  .  *  .  .  .  *  .  .  .  .  HCF    D
 9  14 LPAR0014   7 +S -S  1 -U  .  .  *  2 -U +S  *  5 -U  7 11  ESA    D
10  15 LPAR0015   7 +S -S  1 -U  .  .  *  2 -U +S  * +U -U  7 11  ESA    D
11
12
13
14
15
16
17 U-PAGE UP  D-PAGE DOWN
18 S-STATUS VIEW   > 1-ONLINE UNSHARED (+U)   > 5-AVAILABLE OFFLINE UNSHARED (-U)
19                 > 2-ONLINE SHARED   (+S)   > 6-LP NOT IN RCNF ACCESS LIST ( .)
20                 > 3-OFFLINE SHARED  (-S)   > 7-UNSHARED,ASSIGNED TO LP#   (NN)
21                 > 4-NOT DEFINED     ( *)
22
```

Figure 7-1 LPRCA Frame on C2000-xxA, C2000-xxB, and C2000-xxC

Note: *The upper image shows an example of initial or LU-command-specified display, and the lower image shows its LD-command-specified counterpart.*

© COMPAREX Informationssysteme GmbH

```
          1         2         3         4         5         6         7         8
12345678901234567890123456789012345678901234567890123456789012345678901234567890
 1  LPAR  1 : HCF1      LPAR CHANNEL ASSIGNMENT        (LPRCA)  YY/MM/DD HH:MM:SS
 2  SCDS    : A0
 3               -------------------- CHPID --------------------
 4  LPAR LIST    00 01 02 03 04 05 06 07 08 09 0A 0B 0C 0D 0E 0F
 5   NO NAME     -------------------- STATUS ------------------  MODE  ST
 6    1 HCF1      *  *  *  * -U +U  *  *  2 -U  *  *  *  *  *  *  HCF    A
 7    2 HCF2      *  *  *  * -U  1  *  * +U -U  *  *  *  *  *  *  HCF    D
 8    3 HCF3      *  *  *  * -U  1  *  *  2 -U  *  *  *  *  *  *  HCF    D
 9    4 HCF4      *  *  *  * -U  1  *  *  2 -U  *  *  *  *  *  *  HCF    D
10    5 HCF5      *  *  *  * -U  1  *  *  2 -U  *  *  *  *  *  *  HCF    D
11    6 HCF6      *  *  *  * -U  1  *  *  2 -U  *  *  *  *  *  *  HCF    D
12    7 HCF7      *  *  *  * -U  1  *  *  2 -U  *  *  *  *  *  *  HCF    D
13    8 HCF8      *  *  *  * -U  1  *  *  2 -U  *  *  *  *  *  *  HCF    D
14    9 HCF9      *  *  *  * -U  1  *  *  2 -U  *  *  *  *  *  *  HCF    D
15   10 HCF10     *  *  *  * -U  1  *  *  2 -U  *  *  *  *  *  *  HCF    D
16
17  U-PAGE UP  D-PAGE DOWN
18  S-STATUS VIEW   > 1-ONLINE UNSHARED (+U)   > 5-AVAILABLE OFFLINE UNSHARED (-U)
19                  > 2-ONLINE SHARED   (+S)   > 6-LP NOT IN RCNF ACCESS LIST ( .)
20                  > 3-OFFLINE SHARED  (-S)   > 7-UNSHARED,ASSIGNED TO LP#   (NN)
21                  > 4-NOT DEFINED     ( *)
22
```

```
          1         2         3         4         5         6         7         8
12345678901234567890123456789012345678901234567890123456789012345678901234567890
 1  LPAR  1 : HCF1      LPAR CHANNEL ASSIGNMENT        (LPRCA)  YY/MM/DD HH:MM:SS
 2  SCDS    : A0
 3               -------------------- CHPID --------------------
 4  LPAR LIST    00 01 02 03 04 05 06 07 08 09 0A 0B 0C 0D 0E 0F
 5   NO NAME     -------------------- STATUS ------------------  MODE  ST
 6   11 HCF11     *  *  *  * -U +U  *  *  2 -U  *  *  *  *  *  *  HCF    A
 7   12 HCF12     *  *  *  * -U  1  *  *  2 -U  *  *  *  *  *  *  HCF    D
 8   13 HCF13     *  *  *  * -U  1  *  *  2 -U  *  *  *  *  *  *  HCF    D
 9   14 HCF14     *  *  *  * -U  1  *  *  2 -U  *  *  *  *  *  *  HCF    D
10   15 HCF15     *  *  *  * -U  1  *  *  2 -U  *  *  *  *  *  *  HCF    D
11
12
13
14
15
16
17  U-PAGE UP  D-PAGE DOWN
18  S-STATUS VIEW   > 1-ONLINE UNSHARED (+U)   > 5-AVAILABLE OFFLINE UNSHARED (-U)
19                  > 2-ONLINE SHARED   (+S)   > 6-LP NOT IN RCNF ACCESS LIST ( .)
20                  > 3-OFFLINE SHARED  (-S)   > 7-UNSHARED,ASSIGNED TO LP#   (NN)
21                  > 4-NOT DEFINED     ( *)
22
```

Figure 7-2 LPRCA Frame on CF2000-0xA

Note: *The upper image shows an example of initial or LU-command-specified display, and the lower image shows its LD-command-specified counterpart.*

© COMPAREX Informationssysteme GmbH

Table 7-1 LPRCA Frame—Frame Commands

Display	**Function**
U-PAGE UP	Causes display of subsequent channel path information by the following operation: type U and press the Enter key.
D-PAGE DOWN	Causes display of preceding channel path information by the following operation: type D and press the Enter key.
S-STATUS VIEW	Toggles display off/on of each physical channel path status in accordance with specified subfunction by the following operation: type S and a subfunction number, and press the Enter key.
1-ONLINE UNSHARED (+U)	Specifies the online unshared status (+U).
2-ONLINE SHARED (+S)	Specifies the online shared status (+S).
3-OFFLINE SHARED (-S)	Specifies the offline shared status (-S).
4-NOT DEFINED (*)	Specifies the not defined (disconnected) status (*).
5-AVAILABLE OFFLINE UNSHARED (-U)	Specifies the available offline unshared status (-U).
6-LP NOT IN RCNF ACCESS LIST (.)	Specifies the unavailable status (.).
7-UNSHARED, ASSIGNED TO LP# (NN)	Specifies the unshared and assigned to other LPAR status (NN).

Table 7-2 LPRCA Frame—Display Fields

Display	**Meaning** **(Sheet 1 of 2)**
SCDS	SCDS number(s) of active SCDS(s) currently selected. A pair of SCDS numbers are displayed only in 2-IOCDS mode. Otherwise, only one SCDS number is displayed.
LPAR GROUP	LPAR Group number currently selected. Displayed only in 2-IOCDS mode.
0	LPAR Group 0.
1	LPAR Group 1.
ACT LPAR	Total number of currently-activated LPARs (nn) in both LPAR Groups (0 and 1). Displayed only in 2-IOCDS mode.
nn	
STATUS	Status of physical channel path assignment.
+U	Status being unshared and attached to this LPAR, and will enter online status with activation of this LPAR.
+S	Status being shared and attached to this LPAR, and will enter online status with activation of this LPAR. Not applicable to a physical channel path of CFR, CVC, block-multiplexer, or byte-multiplexer; thus not applicable to the CF2000-0xA models.
-S	Status being shared and attached to this LPAR, and will not enter online status with activation of this LPAR. Not applicable to a physical channel path of CFR, CVC, block-multiplexer, or byte-multiplexer; thus not applicable to the CF2000-0xA models.
*	Status being disconnected.
-U	Status being unshared, reconfigurable and attached to this LPAR, and will not enter online status with activation of this LPAR.
.	Status being not connectable to this LPAR. Not applicable to the CF2000-0xA models.
NN	Status being unshared and will enter online status with activation of LPAR number NN.
MODE	CPU mode of each LPAR.
ESA	ESA/390 mode. Not available on the CF2000-0xA Models.
HCF	HCCF-LPAR.
DMY	Dummy mode. Not available on the CF2000-0xA Models.

© COMPAREX Informationssysteme GmbH

Display		**Meaning** **(Sheet 2 of 2)**
ST		Status of each LPAR.
	A	Activated status.
	D	Deactivated status.
	P	Pending status (activation pending).
	C	Check-stopped state.
LPAR NAME		Defined LPAR name.
	NOT USED	Undefined LPAR.

© COMPAREX Informationssysteme GmbH

7.2 LPRCH Frame

The LPRCH frame displays, and can alter, channels of each LPAR, including assignment of an LPAR number to each channel. For LPARs in Dummy mode and ICMF-specified LPARs in HCF mode, all the definition items on this frame are ignored. To an ICMF-not-specified LPARs in HCF mode, only a physical channel path of CFR channel type can be assigned. Figures 7-3 thru 7-4 illustrate the frame images by processor model. Tables 7-3 and 7-4 describe the frame commands, the definition fields, and the display fields.

```
          1         2         3         4         5         6         7         8
12345678901234567890123456789012345678901234567890123456789012345678901234567890
 1 LPAR  1 : LPAR0001  LPAR CHANNEL DEFINITION        (LPRCH)  YY/MM/DD HH:MM:SS
 2 SCDS    : A0
 3 LPAR         MODE    ST                  ------CHPID------  ------CHPID------
 4   1 LPAR0001 ESA      A  INSTALLED&      00000000 00000000  11111111 11111111
 5   2 LPAR0002 ESA      D    ENABLED&      01234567 89ABCDEF  01234567 89ABCDEF
 6   3 LPAR0003 HCF      D    CONFIGURED  : +++++++- +++-++++  ++++++++ ++++++++
 7   4 LPAR0004 ESA      D   ONLINE       : ---+-+-- ------++  -------- --------
 8   5 LPAR0005 ESA      D
 9   6 LPAR0006 ESA      D   RECONFIG.    : RRRRRNN* RRR*RRRR  RRRRRRRR RRRRRRRR
10   7 LPAR0007 ESA      D   LPAR#/SHARED :                     1
11   8 LPAR0008 ESA      D                 7441111* 215*5699  0SS66666 6666S688
12   9 LPAR0009 ESA      A
13  10 LPAR0010 DMY      D
14  11 LPAR0011 ESA      D   CHANNEL TYPE : YLLLLLLL LLLLYLLL  NNNNNNNN TVVVNNNN
15  12 LPAR0012 ESA      D
16  13 LPAR0013 ESA      D
17  14 LPAR0014 ESA      D
18  15 LPAR0015 ESA      D
19 F-FUNCTION             Z-LPAR FRAME INDEX (LPRIDX)              U-PAGE UP
20  1-DEFINE              Z+FUNCTION CODE ON LPRIDX                D-PAGE DOWN
21  2-SAVE                 -DIRECT LPAR FRAME CALL
22
```

Figure 7-3 LPRCH Frame on C2000-xxA, C2000-xxB, and C2000-xxC

```
          1         2         3         4         5         6         7         8
12345678901234567890123456789012345678901234567890123456789012345678901234567890
 1 LPAR  1 : HCF1      LPAR CHANNEL DEFINITION        (LPRCH)  YY/MM/DD HH:MM:SS
 2 SCDS    : A0
 3 LPAR         MODE    ST                  ------CHPID------  ------CHPID------
 4   1 HCF1     HCF      A  INSTALLED&      00000000 00000000  11111111 11111111
 5   2 HCF2     HCF      D    ENABLED&      01234567 89ABCDEF  01234567 89ABCDEF
 6   3 HCF3     HCF      D    CONFIGURED  : ----++-- ++--++--  ----++-- ++--++--
 7   4 HCF4     HCF      D   ONLINE       : ----++-- ++--++--  ----++-- ++--++--
 8   5 HCF5     HCF      D
 9   6 HCF6     HCF      D   RECONFIG.    : ****RR** RR**RR**  ****RR** RR**RR**
10   7 HCF7     HCF      D   LPAR#/SHARED :
11   8 HCF8     HCF      D                 ****11** 11**11**  ****11** 11**11**
12   9 HCF9     HCF      A
13  10 HCF10    HCF      D
14  11 HCF11    HCF      D   CHANNEL TYPE : ****RR** RR**RR**  ****RR** RR**RR**
15  12 HCF12    HCF      D
16  13 HCF13    HCF      D
17  14 HCF14    HCF      D
18  15 HCF15    HCF      D
19 F-FUNCTION             Z-LPAR FRAME INDEX (LPRIDX)              U-PAGE UP
20  1-DEFINE              Z+FUNCTION CODE ON LPRIDX                D-PAGE DOWN
21  2-SAVE                 -DIRECT LPAR FRAME CALL
22
```

Figure 7-4 LPRCH Frame on CF2000-0xA

© COMPAREX Informationssysteme GmbH

Table 7-3 LPRCH Frame—Frame Commands and Definition Fields

Display/Input		Function
F-FUNCTION		Executes the subfunctions 1 and 2 by the following operation: type F and a subfunction number, and press the Enter key.
	1-DEFINE	Enables key input to the definition fields.
	2-SAVE	Stores the entire channel definition information of all LPARs. The stored information remains unchanged until next execution of this subfunction regardless of system's power-off.
U-PAGE UP		Causes display of subsequent channel information by the following operation: type U and press the Enter key.
D-PAGE DOWN		Causes display of preceding channel information by the following operation: type D and press the Enter key.
ONLINE		Defines online (+) or offline (-) status of each physical channel path.
LPAR#/SHARED		Defines LPAR number assigned to each physical channel path.
	n	
	S	Shared by multiple LPARs under ESCON Multiple Image Facility (EMIF). Not applicable to a physical channel path of CFR, CVC, block-multiplexer, or byte-multiplexer; thus not applicable to the CF2000-0xA models.
	*	Not connected.

Table 7-4 LPRCH Frame—Display Fields

Display		Meaning
SCDS		SCDS number(s) of active SCDS(s) currently selected. A pair of SCDS numbers are displayed only in 2-IOCDS mode. Otherwise, only one SCDS number is displayed.
LPAR GROUP		LPAR Group number currently selected. Displayed only in 2-IOCDS mode.
	0	LPAR Group 0.
	1	LPAR Group 1.
ACT LPAR		Total number of currently-activated LPARs (nn) in both LPAR Groups (0 and 1). Displayed only in 2-IOCDS mode.
	nn	
MODE		CPU mode of each LPAR.
	ESA	ESA/390 mode. Not available on the CF2000 models.
	HCF	HCCF-LPAR.
	DMY	Dummy mode. Not available on the CF2000-0xA Models.
ST		Status of each LPAR.
	A	Activated status.
	D	Deactivated status.
	P	Pending status (activation pending).
	C	Check-stopped state.
INSTALLED & ENABLED & CONFIG-URED		Status of physical channel path connection.
	+	Connected.
	–	Disconnected.
RECONFIG		Reconfigurability of each physical channel path.
	N	Not reconfigurable. This indication is not applicable to the CF2000-0xA Mmodels.
	R	Reconfigurable.
	*	Not connected.
CHANNEL TYPE		Channel type of each physical channel path.
	L	Block-multiplexer channel. Not applicable to the CF2000-0xA Models.
	N	CNC channel. Not applicable to the CF2000-0xA Models.
	R	CFR channel.

© COMPAREX Informationssysteme GmbH

CHANNEL TYPE (cont.)	S	CFS channel. Not applicable to the CF2000-0xA Models.
	T	CTC channel. Not applicable to the CF2000-0xA Models.
	V	CVC channel. Not applicable to the CF2000-0xA Models.
	Y	Byte-multiplexer channel. Not applicable to the CF2000-0xA Models.
	C	OSC (Open Systems Connection) channel. Not applicable to the CF2000-0xA Models.
	*	Not connected.

© COMPAREX Informationssysteme GmbH

7.3 LPRCTL Frame

The LPRCTL frame displays, and can alter, specifying of the following functions for the LPARs configured: Wait Completion, Resource Capping, SCDS Access Enable control, Resource Measurement Facility control, Isolate control, Protection control, Dynamic LPAR Reconfiguration control, ADMF control, ICMF control, Time Machine Facility, Time Warp Facility, Alarm Bell, MDC Enable control (option), Policy Diagnose, and PMC command. Figures 7-5 thru 7-6 illustrate the frame images by processor model. Tables 7-5 and 7-6 describe the frame commands, the definition fields, and the display fields.

Note *on MDC Enable: This function is available ("MD" field displayed and effective) only when the machine-dependent constants (MDC) setting by the system control program is disabled (default) in the system installation setting. Alteration of such system installation setting is not released to the end user and must be conducted by the customer engineer or the field engineer.*

© COMPAREX Informationssysteme GmbH

```
          1         2         3         4         5         6         7         8
12345678901234567890123456789012345678901234567890123456789012345678901234567890
 1  LPAR  1 : LPAR0001  LPAR CONTROL DEFINITION        (LPRCTL) YY/MM/DD HH:MM:SS
 2  SCDS    : A0
 3  L-LPAR       MODE S  WC RC   IO RF IS PR XL AD MF TM TW BR MD PL PX
 4    1 LPAR0001 ESA  A  Y  Y    N  Y  N  N  Y  N  Y  Y  N  N  Y  Y  Y
 5    2 LPAR0002 ESA  D  N  N    N  N  N  Y  N  N  N  N  Y  N  Y  N  Y
 6    3 LPAR0003 HCF  D  N  N    N  N  N  N  N  N  Y  N  N  N  Y  N  Y
 7    4 LPAR0004 ESA  D  N  N    N  N  N  N  N  N  N  N  N  N  Y  N  N
 8    5 LPAR0005 ESA  D  N  N    N  N  N  N  N  N  N  N  N  N  Y  N  N
 9    6 LPAR0006 ESA  D  N  N    N  N  N  N  N  N  N  Y  N  N  Y  N  N
10    7 LPAR0007 ESA  D  N  N    N  N  N  N  N  N  N  Y  Y  N  Y  N  N
11    8 LPAR0008 ESA  D  N  N    N  N  N  N  N  N  N  N  N  N  Y  N  N
12    9 LPAR0009 ESA  D  N  N    Y  N  Y  Y  N  N  N  N  Y  N  Y  N  N
13   10 LPAR0010 DMY  D  N  N    N  N  N  N  N  N  N  N  N  N  N  N  N
14
15
16
17
18
19  F-FUNCTION             Z-LPAR FRAME INDEX (LPRIDX)           LU-LPAR PAGE UP
20   1-DEFINE/L            Z+FUNCTION CODE ON LPRIDX             LD-LPAR PAGE DOWN
21   2-SAVE                 -DIRECT LPAR FRAME CALL
22
```

```
          1         2         3         4         5         6         7         8
12345678901234567890123456789012345678901234567890123456789012345678901234567890
 1  SCDS    : A0
 2  L-LPAR       MODE S  WC RC   IO RF IS PR XL AD MF TM TW BR MD PL PX
 3   11 LPAR0011 ESA  A  Y  Y    N  Y  N  N  Y  N  Y  Y  N  N  Y  N  N
 4   12 LPAR0012 ESA  D  N  N    N  N  N  Y  N  N  N  N  Y  N  Y  N  N
 5   13 LPAR0013 HCF  D  N  N    N  N  N  N  N  N  Y  N  N  N  Y  N  N
 6   14 LPAR0014 ESA  D  N  N    N  N  N  N  N  N  N  N  N  N  Y  N  N
 7   15 LPAR0015 ESA  D  N  N    N  N  N  N  N  N  N  N  N  N  Y  N  N
 8
 9
10
11
12
13
14
15
16
17
18  F-FUNCTION             Z-LPAR FRAME INDEX (LPRIDX)           LU-LPAR PAGE UP
19   1-DEFINE/L            Z+FUNCTION CODE ON LPRIDX             LD-LPAR PAGE DOWN
20   2-SAVE                 -DIRECT LPAR FRAME CALL
21
22
```

Figure 7-5 LPRCTL Frame on C2000-xxA, C2000-xxB, and C2000-xxC

© COMPAREX Informationssysteme GmbH

```
          1         2         3         4         5         6         7         8
12345678901234567890123456789012345678901234567890123456789012345678901234567890
 1  LPAR  1 : HCF1      LPAR CONTROL DEFINITION        (LPRCTL) YY/MM/DD HH:MM:SS
 2  SCDS    : A0
 3  L-LPAR       MODE S  WC RC   IO RF IS PR XL    MF       BR MD PL PX
 4    1 HCF1     HCF  A  Y  Y    N  Y  N  N  Y     Y        N  Y  N  Y
 5    2 HCF2     HCF  D  N  N    N  N  N  Y  N     N        N  Y  N  Y
 6    3 HCF3     HCF  D  N  N    N  N  N  N  N     Y        N  Y  N  Y
 7    4 HCF4     HCF  D  N  N    N  N  N  N  N     N        N  Y  N  N
 8    5 HCF5     HCF  D  N  N    N  N  N  N  N     N        N  Y  N  N
 9    6 HCF6     HCF  D  N  N    N  N  N  N  N     N        N  Y  N  N
10    7 HCF7     HCF  D  N  N    N  N  N  N  N     N        N  Y  N  N
11    8 HCF8     HCF  D  N  N    N  N  N  N  N     N        N  Y  N  N
12    9 HCF9     HCF  D  N  N    Y  N  Y  Y  N     N        N  Y  N  N
13   10 HCF10    HCF  D  N  N    Y  N  Y  Y  N     N        N  Y  N  N
14
15
16
17
18
19  F-FUNCTION             Z-LPAR FRAME INDEX (LPRIDX)           LU-LPAR PAGE UP
20   1-DEFINE/L            Z+FUNCTION CODE ON LPRIDX             LD-LPAR PAGE DOWN
21   2-SAVE                 -DIRECT LPAR FRAME CALL
22
```

```
          1         2         3         4         5         6         7         8
12345678901234567890123456789012345678901234567890123456789012345678901234567890
 1  LPAR  1 : HCF1      LPAR CONTROL DEFINITION        (LPRCTL) YY/MM/DD HH:MM:SS
 2  SCDS    : A0
 3  L-LPAR       MODE S  WC RC   IO RF IS PR XL    MF       BR MD PL PX
 4   11 HCF11    HCF  D  N  N    N  N  N  N  N     N        N  Y  N  N
 5   12 HCF12    HCF  D  N  N    N  N  N  N  N     N        N  Y  N  N
 6   13 HCF13    HCF  D  N  N    N  N  N  N  N     N        N  Y  N  N
 7   14 HCF14    HCF  D  N  N    N  N  N  N  N     N        N  Y  N  N
 8   15 HCF15    HCF  D  N  N    N  N  N  N  N     N        N  Y  N  N
 9
10
11
12
13
14
15
16
17
18
19  F-FUNCTION             Z-LPAR FRAME INDEX (LPRIDX)           LU-LPAR PAGE UP
20   1-DEFINE/L            Z+FUNCTION CODE ON LPRIDX             LD-LPAR PAGE DOWN
21   2-SAVE                 -DIRECT LPAR FRAME CALL
22
```

Figure 7-6 LPRCTL Frame on CF2000-0xA

© COMPAREX Informationssysteme GmbH

Table 7-5 LPRCTL Frame—Frame Commands and Definition Fields

Display/Input	Function (Sheet 1 of 2)
L-LPAR and LPAR numbers (each followed by LPAR name)	Specifies the target LPAR by the following operation: type L and an LPAR number (1-15), and press the Enter key. Then, ">" will be displayed on the left of the LPAR number. Instead, entering LA specifies all LPARs at a time. This function must be selected before execution of the frame command suffixed with "/L."
F-FUNCTION	Executes the subfunctions 1 and 2 by the following operation: type F and a subfunction number, and press the Enter key.
1-DEFINE/L	Enables key input to definition fields for the specified LPAR.
2-SAVE	Stores the entire definition information of all LPARs. The stored information remains unchanged until next execution of this subfunction regardless of system's power-off.
LU-LPAR PAGE UP	Causes display of the subsequent (larger) LPAR number, if any, by the following operation: type LU and press the Enter key.
LD-LPAR PAGE DOWN	Causes display of the preceding (smaller) LPAR number, if any, by the following operation: type LD and press the Enter key.
WC*	Defines Wait Completion function of each LPAR.
Y	Enables the Wait Completion function of the LPAR.
N	Disables the Wait Completion function of the LPAR.
RC	Defines resource capping of each LPAR.
Y	Enables the resource capping of the LPAR.
N	Disables the resource capping of the LPAR.
IO*	Defines SCDS Access Enable control and Dynamic I/O Reconfiguration Management (DRM) control.
Y	Enables write/read-access to the SCDS, and enables DRM.
N	Disables write/read-access to the SCDS, and disables DRM.
RF*	Defines RMF (Resource Measurement Facility) control.
Y	Causes the RMF and monitor programs on the selected LPAR to collect data of all LPARs.
N	Causes the RMF and monitor programs on the selected LPAR to collect data of this LPAR only.
IS†	Defines Isolate control to connect a channel path to or disconnect it from the LPAR for reconfiguration.
Y	Inhibits a channel path reconfiguration.
N	Allows a channel path reconfiguration.
PR	Defines Protected LPAR.
Y	Inhibits all operations on the selected LPAR through the frame operation or by commands. (Protected.)
N	Allows operations on the selected LPAR through the frame operation or by commands. (Not protected.)
XL*†	Defines Dynamic LPAR Reconfiguration control.
Y	Enables the Dynamic LPAR Reconfiguration function to the LPAR.
N	Disables the Dynamic LPAR Reconfiguration function to the LPAR.
AD*†‡	Defines ADMF (Asynchronous Data Mover Facility) control.
Y	Defines ADMF (Asynchronous Data Mover Facility) control.
N	Disables the ADMF to the selected LPAR.
MF*	Defines ICMF (Integrated Coupling Migration Facility) control.
Y	Enables the ICMF to the selected LPAR.
N	Disables the ICMF to the selected LPAR.
TM*†‡	Defines setting of Time Machine Facility for each LPAR.
Y	Enables Time Machine Facility to the selected LPAR.
N	Disables Time Machine Facility to the selected LPAR.

© COMPAREX Informationssysteme GmbH

Display/Input		Function (Sheet 2 of 2)
TW*†‡		Defines setting of Time Warp Facility for each LPAR.
	Y	Enables Time Warp Facility to the selected LPAR.
	N	Disables Time Warp Facility to the selected LPAR.
BR*†		Defines setting of the Alarm Bell function to the target LPAR. This function, if enabled, causes the SVP alarm buzzer to beep when the guest OS loads a disabled wait PSW.
	Y	Enables Alarm Bell to the selected LPAR.
	N	Disables Alarm Bell to the selected LPAR.
MD*†		Defines how the OS in the target LPAR is to obtain the MDC and MPFACTOR information.
	Y	Enables the guest OS to obtain the MDC and MPFACTOR information from the SCP INFO Block of the MLPF Hypervisor.
	N	Returns zero for this MD field, allowing the guest OS to obtain the MDC and MPFACTOR information from the OS's own software tables.
PL*†		Defines Policy Diagnose control for MLPF Policy to the target LPAR.
	Y	Allows writing of MLPF Policy with Policy Diagnose instructions.
	N	Inhibits writing of MLPF Policy with Policy Diagnose instructions.
PX		Defines PMC command control for MLPF Policy to the target LPAR.
	Y	Allows editing of PMC commands.
	N	Inhibits editing of PMC commands.

* Not effective on an LPAR in Dummy mode (treated as "N").
† Not effective on an LPAR in HCF mode (treated as "N").
‡ Not applicable to CF2000-0xA Models.

Table 7-6 LPRCTL Frame—Display Fields

Display		Meaning
SCDS		SCDS number(s) of active SCDS(s) currently selected. A pair of SCDS numbers are displayed only in 2-IOCDS mode. Otherwise, only one SCDS number is displayed.
LPAR GROUP		LPAR Group number currently selected. Displayed only in 2-IOCDS mode.
	0	LPAR Group 0.
	1	LPAR Group 1.
ACT LPAR		Total number of currently-activated LPARs (nn) in both LPAR Groups (0 and 1). Displayed only in 2-IOCDS mode.
	nn	
MODE		CPU mode of each LPAR.
	ESA	ESA/390 mode. Not available on the CF2000-0xA.
	HCF	HCCF-LPAR.
	DMY	Dummy mode. Not available on the CF2000-0xA Models.
S		Status of each LPAR.
	A	Activated status.
	D	Deactivated status.
	P	Pending status (activation pending).

© COMPAREX Informationssysteme GmbH

7.4 LPRDEF Frame

The LPRDEF frame displays, and can alter, the following definition information for the LPARs configured: architecture mode, main storage capacity and expanded storage capacity, and HCCF-LPAR.

Figures 7-7 thru 7-9 illustrate the frame images by processor model. Tables 7-7 and 7-8 describe the frame commands, the definition fields, and the display fields.

Note *on LPRDEF frame images: Each LPRDEF frame image denotes a specific processor model by the number of IPs and the version code shown therein. Conversely, these parameters in each LPRDEF frame image vary with processor configurations.*

© COMPAREX Informationssysteme GmbH

```
          1         2         3         4         5         6         7         8
12345678901234567890123456789012345678901234567890123456789012345678901234567890
 1  LPAR  1 : LPAR0001  LPAR CONFIG DEFINITION         (LPRDEF) YY/MM/DD HH:MM:SS
 2  SCDS    : A0
 3              MODE S  AP  A    MS     ES IP  CH F IP/DEV# PARM     VER/SER#
 4  PHYSICAL                    1004   1024 11 128                    8A  00001
 5  L-LPAR
 6    1 LPAR0001 ESA  A   1  A   256    512  4  64 N 0 0640           8A  10001
 7    2 LPAR0002 ESA  D  99  A    96    128  2  32 N 0 0740           8A  20001
 8    3 LPAR0003 HCF  D      M   256      0  1   0 N 0 0470           8A  30001
 9    4 LPAR0004 ESA  D      M     0      0  0   0 N 0 0000           8A  40001
10    5 LPAR0005 ESA  D      M     0      0  0   0 N 0 0000           8A  50001
11    6 LPAR0006 ESA  D      M     0      0  0   0 N 0 0000           8A  60001
12    7 LPAR0007 ESA  D      M     0      0  0   0 N 0 0000           8A  70001
13    8 LPAR0008 ESA  D      M     0      0  0   0 N 0 0000           8A  80001
14    9 LPAR0009 ESA  D   3  A    32      0  2  16 N 0 0340           8A  90001
15   10 LPAR0010 DMY  D   2  A     0      0  2   0 N 0 0000
16
17  F-FUNCTION              Z-LPAR FRAME INDEX (LPRIDX)
18   1-DEFINE/L             Z+FUNCTION CODE ON LPRIDX
19   2-SAVE                  -DIRECT LPAR FRAME CALL
20   3-ACTIVATE/L
21   4-DEACTIVATE/L
22
```

```
          1         2         3         4         5         6         7         8
12345678901234567890123456789012345678901234567890123456789012345678901234567890
 1  LPAR  1 : LPAR0001  LPAR CONFIG DEFINITION         (LPRDEF) YY/MM/DD HH:MM:SS
 2  SCDS    : A0
 3              MODE S  AP  A    MS     ES IP  CH F IP/DEV# PARM     VER/SER#
 4  PHYSICAL                    1004   1024 11 128                    8A  00001
 5  L-LPAR
 6   11 LPAR0011 ESA  A   1  A   256    512  4  64 N 0 0640           8A  A0001
 7   12 LPAR0012 ESA  D  99  A    96    128  2  32 N 0 0740           8A  B0001
 8   13 LPAR0013 HCF  D      M   256      0  1   0 N 0 0470           8A  C0001
 9   14 LPAR0014 ESA  D      M     0      0  0   0 N 0 0000           8A  D0001
10   15 LPAR0015 ESA  D      M     0      0  0   0 N 0 0000           8A  E0001
11
12
13
14
15
16
17  F-FUNCTION              Z-LPAR FRAME INDEX (LPRIDX)
18   1-DEFINE/L             Z+FUNCTION CODE ON LPRIDX
19   2-SAVE                  -DIRECT LPAR FRAME CALL
20   3-ACTIVATE/L
21   4-DEACTIVATE/L
22
```

Figure 7-7 LPRDEF Frame on C2000-xxAv and C2000-xxB (Sheet 1 of2)

Note: *The upper image shows an example of initial or LU-command-specified display for the C2000-A2A in non-VSF mode with one IntCF IP, and the lower image shows its LD-command-specified counterpart*.

© COMPAREX Informationssysteme GmbH

```
          1         2         3         4         5         6         7         8
12345678901234567890123456789012345678901234567890123456789012345678901234567890
 1 LPAR  1 : LPAR0001  LPAR CONFIG DEFINITION         (LPRDEF) YY/MM/DD HH:MM:SS
 2 SCDS    : A0
 3              MODE S  AP  A    MS     ES IP  CH F IP/DEV# PARM     VER/SER#
 4 PHYSICAL                    1004   1024 11 128                     8A  00001
 5 L-LPAR
 6   1 LPAR0001 ESA  A   1  A   256    512  4  64 N 0 0640           82  10001
 7   2 LPAR0002 ESA  D  99  A    96    128  2  32 N 0 0740           82  20001
 8   3 LPAR0003 HCF  D      M   256      0  1   0 N 0 0470           82  30001
 9   4 LPAR0004 ESA  D      M     0      0  0   0 N 0 0000           82  40001
10   5 LPAR0005 ESA  D      M     0      0  0   0 N 0 0000           82  50001
11   6 LPAR0006 ESA  D      M     0      0  0   0 N 0 0000           82  60001
12   7 LPAR0007 ESA  D      M     0      0  0   0 N 0 0000           84  70001
13   8 LPAR0008 ESA  D      M     0      0  0   0 N 0 0000           84  80001
14   9 LPAR0009 ESA  D   3  A    32      0  2  16 N 0 0340           00  90001
15  10 LPAR0010 DMY  D   2  A     0      0  2   0 N 0 0000
16
17 F-FUNCTION              Z-LPAR FRAME INDEX (LPRIDX)
18  1-DEFINE/L             Z+FUNCTION CODE ON LPRIDX
19  2-SAVE                  -DIRECT LPAR FRAME CALL
20  3-ACTIVATE/L
21  4-DEACTIVATE/L
22
```

```
          1         2         3         4         5         6         7         8
12345678901234567890123456789012345678901234567890123456789012345678901234567890
 1  LPAR  1 : LPAR0001  LPAR CONFIG DEFINITION         (LPRDEF) YY/MM/DD HH:MM:SS
 2 SCDS    : A0
 3              MODE S  AP  A    MS     ES IP  CH F IP/DEV# PARM     VER/SER#
 4 PHYSICAL                    1004   1024 11 128                     8A  00001
 5 L-LPAR
 6   11 LPAR0011 ESA  A   1  A   256    512  4  64 N 0 0640           82  A0001
 7   12 LPAR0012 ESA  D  99  A    96    128  2  32 N 0 0740           82  B0001
 8   13 LPAR0013 HCF  D      M   256      0  1   0 N 0 0470           82  C0001
 9   14 LPAR0014 ESA  D      M     0      0  0   0 N 0 0000           84  D0001
10   15 LPAR0015 ESA  D      M     0      0  0   0 N 0 0000           84  E0001
11
12
13
14
15
16
17 F-FUNCTION              Z-LPAR FRAME INDEX (LPRIDX)
18  1-DEFINE/L             Z+FUNCTION CODE ON LPRIDX
19  2-SAVE                  -DIRECT LPAR FRAME CALL
20  3-ACTIVATE/L
21  4-DEACTIVATE/L
22
```

Figure 7-7 LPRDEF Frame on C2000-xxA and C2000-xxB (Sheet 2 of 2)

© COMPAREX Informationssysteme GmbH

```
          1         2         3         4         5         6         7         8
12345678901234567890123456789012345678901234567890123456789012345678901234567890
 1 LPAR  1 : HCF1      LPAR CONFIG DEFINITION         (LPRDEF) YY/MM/DD HH:MM:SS
 2 SCDS    : A0
 3              MODE S  AP  A    MS     ES IP  CH F IP/DEV# PARM     VER/SER#
 4 PHYSICAL                    1004   1024 11  32                     80  00000
 5 L-LPAR
 6   1 HCF1     HCF  A   1  A   256    512  4   8 N 0 0000           80  10000
 7   2 HCF2     HCF  D  99  A    96    128  2   8 N 0 0000           80  20000
 8   3 HCF3     HCF  D      M   256      0  1   0 N 0 0000           80  30000
 9   4 HCF4     HCF  D      M     0      0  0   0 N 0 0000           80  40000
10   5 HCF5     HCF  D      M     0      0  0   0 N 0 0000           80  50000
11   6 HCF6     HCF  D      M     0      0  0   0 N 0 0000           80  60000
12   7 HCF7     HCF  D      M     0      0  0   0 N 0 0000           80  70000
13   8 HCF8     HCF  D      M     0      0  0   0 N 0 0000           80  80000
14   9 HCF9     HCF  D   3  A    32      0  2   8 N 0 0000           80  90000
15  10 HCF10    HCF  D   2  A    32      0  2   8 N 0 0000           80  A0000
16
17 F-FUNCTION              Z-LPAR FRAME INDEX (LPRIDX)
18  1-DEFINE/L             Z+FUNCTION CODE ON LPRIDX
19  2-SAVE                  -DIRECT LPAR FRAME CALL
20  3-ACTIVATE/L
21  4-DEACTIVATE/L
22
```

```
          1         2         3         4         5         6         7         8
12345678901234567890123456789012345678901234567890123456789012345678901234567890
 1 LPAR  1 : HCF1      LPAR CONFIG DEFINITION         (LPRDEF) YY/MM/DD HH:MM:SS
 2 SCDS    : A0
 3              MODE S  AP  A    MS     ES IP  CH F IP/DEV# PARM     VER/SER#
 4 PHYSICAL                    1004   1024 11  32                     80  00000
 5 L-LPAR
 6  11 HCF11    HCF  A   1  A   256    512  4   8 N 0 0000           80  B0000
 7  12 HCF12    HCF  D  99  A    96    128  2   8 N 0 0000           80  C0000
 8  13 HCF13    HCF  D      M   256      0  1   0 N 0 0000           80  D0000
 9  14 HCF14    HCF  D      M     0      0  0   0 N 0 0000           80  E0000
10  15 HCF15    HCF  D      M     0      0  0   0 N 0 0000           80  F0000
11
12
13
14
15
16
17 F-FUNCTION              Z-LPAR FRAME INDEX (LPRIDX)
18  1-DEFINE/L             Z+FUNCTION CODE ON LPRIDX
19  2-SAVE                  -DIRECT LPAR FRAME CALL
20  3-ACTIVATE/L
21  4-DEACTIVATE/L
22
```

Figure 7-8 LPRDEF Frame on CF2000-0xA

Note: *The upper image shows an example of initial or LU-command-specified display for the CF2000-0xA, and the lower image shows its LD-command-specified counterpart.*

© COMPAREX Informationssysteme GmbH

```
          1         2         3         4         5         6         7         8
12345678901234567890123456789012345678901234567890123456789012345678901234567890
 LPAR  1 : LPAR0001  LPAR CONFIG DEFINITION         (LPRDEF) YY/MM/DD HH:MM:SS
SCDS    : A0
             MODE S  AP  A    MS     ES IP  CH F IP/DEV# PARM     VER/SER#
PHYSICAL                    1004   1024 13 128                     xx  00001
L-LPAR
  1 LPAR0001 ESA  A   1  A   256    512  4  64 N 0 0640           xx  10001
  2 LPAR0002 ESA  D  99  A    96    128  2  32 N 0 0740           xx  20001
  3 LPAR0003 HCF  D      M   256      0  1   0 N 0 0470           xx  30001
  4 LPAR0004 ESA  D      M     0      0  0   0 N 0 0000           xx  40001
  5 LPAR0005 ESA  D      M     0      0  0   0 N 0 0000           xx  50001
  6 LPAR0006 ESA  D      M     0      0  0   0 N 0 0000           xx  60001
  7 LPAR0007 ESA  D      M     0      0  0   0 N 0 0000           xx  70001
  8 LPAR0008 ESA  D      M     0      0  0   0 N 0 0000           xx  80001
  9 LPAR0009 ESA  D   3  A    32      0  2  16 N 0 0340           xx  90001
 10 LPAR0010 DMY  D   2  A     0      0  2   0 N 0 0000

F-FUNCTION              Z-LPAR FRAME INDEX (LPRIDX)
 1-DEFINE/L             Z+FUNCTION CODE ON LPRIDX
 2-SAVE                  -DIRECT LPAR FRAME CALL
 3-ACTIVATE/L
 4-DEACTIVATE/L
```

```
          1         2         3         4         5         6         7         8
12345678901234567890123456789012345678901234567890123456789012345678901234567890
LPAR  1 : LPAR0001  LPAR CONFIG DEFINITION         (LPRDEF) YY/MM/DD HH:MM:SS
SCDS    : A0
             MODE S  AP  A    MS     ES IP  CH F IP/DEV# PARM     VER/SER#
PHYSICAL                    1004   1024 13 128                     xx  00001
L-LPAR
 11 LPAR0011 ESA  A   1  A   256    512  4  64 N 0 0640           xx  A0001
 12 LPAR0012 ESA  D  99  A    96    128  2  32 N 0 0740           xx  B0001
 13 LPAR0013 HCF  D      M   256      0  1   0 N 0 0470           xx  C0001
 14 LPAR0014 ESA  D      M     0      0  0   0 N 0 0000           xx  D0001
 15 LPAR0015 ESA  D      M     0      0  0   0 N 0 0000           xx  E0001
F-FUNCTION              Z-LPAR FRAME INDEX (LPRIDX)
 1-DEFINE/L             Z+FUNCTION CODE ON LPRIDX
 2-SAVE                  -DIRECT LPAR FRAME CALL
 3-ACTIVATE/L
 4-DEACTIVATE/L
```

Figure 7-9 LPRDEF Frame on C2000-xxC (Sheet 1 of 2)

Note: *The upper image shows an example of initial or LU-command-specified display for the C2000-C2D in non-VSF mode with one IntCF IP, and the lower image shows its LD-command-specified counterpart. Version codes for C2000-xxC Models are not determined yet.*

© COMPAREX Informationssysteme GmbH

```
          1         2         3         4         5         6         7         8
12345678901234567890123456789012345678901234567890123456789012345678901234567890
 1  LPAR  1 : LPAR0001  LPAR CONFIG DEFINITION         (LPRDEF) YY/MM/DD HH:MM:SS
 2  SCDS    : A0
 3              MODE S  AP  A    MS     ES IP  CH F IP/DEV# PARM     VER/SER#
 4  PHYSICAL                    1004   1024 13 128                    xx  00001
 5  L-LPAR
 6    1 LPAR0001 ESA  A   1  A   256    512  4  64 N 0 0640           xx  10001
 7    2 LPAR0002 ESA  D  99  A    96    128  2  32 N 0 0740           xx  20001
 8    3 LPAR0003 HCF  D      M   256      0  1   0 N 0 0470           xx  30001
 9    4 LPAR0004 ESA  D      M     0      0  0   0 N 0 0000           xx  40001
10    5 LPAR0005 ESA  D      M     0      0  0   0 N 0 0000           xx  50001
11    6 LPAR0006 ESA  D      M     0      0  0   0 N 0 0000           xx  60001
12    7 LPAR0007 ESA  D      M     0      0  0   0 N 0 0000           xx  70001
13    8 LPAR0008 ESA  D      M     0      0  0   0 N 0 0000           xx  80001
14    9 LPAR0009 ESA  D   3  A    32      0  2  16 N 0 0340           xx  90001
15   10 LPAR0010 DMY  D   2  A     0      0  2   0 N 0 0000
16
17  F-FUNCTION              Z-LPAR FRAME INDEX (LPRIDX)
18   1-DEFINE/L             Z+FUNCTION CODE ON LPRIDX
19   2-SAVE                  -DIRECT LPAR FRAME CALL
20   3-ACTIVATE/L
21   4-DEACTIVATE/L
22
```

```
          1         2         3         4         5         6         7         8
12345678901234567890123456789012345678901234567890123456789012345678901234567890
 1  LPAR  1 : LPAR0001  LPAR CONFIG DEFINITION         (LPRDEF) YY/MM/DD HH:MM:SS
 2  SCDS    : A0
 3              MODE S  AP  A    MS     ES IP  CH F IP/DEV# PARM     VER/SER#
 4  PHYSICAL                    1004   1024 13 128                    xx  00001
 5  L-LPAR
 6   11 LPAR0011 ESA  A   1  A   256    512  4  64 N 0 0640           xx  A0001
 7   12 LPAR0012 ESA  D  99  A    96    128  2  32 N 0 0740           xx  B0001
 8   13 LPAR0013 HCF  D      M   256      0  1   0 N 0 0470           xx  C0001
 9   14 LPAR0014 ESA  D      M     0      0  0   0 N 0 0000           xx  D0001
10   15 LPAR0015 ESA  D      M     0      0  0   0 N 0 0000           xx  E0001
11
12
13
14
15
16
17  F-FUNCTION              Z-LPAR FRAME INDEX (LPRIDX)
18   1-DEFINE/L             Z+FUNCTION CODE ON LPRIDX
19   2-SAVE                  -DIRECT LPAR FRAME CALL
20   3-ACTIVATE/L
21   4-DEACTIVATE/L
22
```

Figure 7-9 LPRDEF Frame on C2000-xxC (Sheet 2 of 2)

Note: *The upper image shows an example of initial or LU-command-specified display for the C2000-C2D in VSF mode with one IntCF IP, and the lower image shows its LD-command-specified counterpart.Version codes for C2000-xxC models are not determined yet.*

© COMPAREX Informationssysteme GmbH

Table 7-7 LPRDEF Frame—Frame Commands and Definition Fields

Display/Input		Function
L-LPAR and LPAR numbers (each followed by LPAR name)		Specifies the target LPAR by the following operation: type L and an LPAR number (1-15), and press the Enter key. Then, ">" will be displayed on the left of the LPAR number. Instead, entering LA specifies all LPARs at a time. This function must be selected before execution of the frame command suffixed with "/L."
MODE		Defines CPU mode of each LPAR as applicable.
	ESA	ESA/390 mode. Not available on the CF2000 models.
	HCF	HCCF-LPAR. Available only when the HCCF is installed.
	DMY	Dummy mode. Not effective to an activated LPAR or the CF2000-0xA Models.
AP		Specifies the order of automatic activation in decimal numbers 1 thru 99. A smaller number gives a higher priority. If the same number is specified to multiple LPARs, an LPAR with a smaller LPAR number or group number has a higher priority.
A		Defines Activate mode of each LPAR (for display and specifying).
	A	Defines Auto Activate mode.
	M	Manual Activate mode.
MS nnnn for LPARs		Defines LPAR-wise MS size in MB. In real MS Capacity Expansion mode, the MS size must be defined here in a model-dependent unit size increment and can be increased up to 2048MB.
ES nnnnnn for LPARs		Defines LPAR-wise ES size in MB. In real MS Capacity Expansion mode, the ES size must be defined here in a model-dependent unit size increment.
F		Defines Auto IPL or manual IPL for each LPAR.
	Y	Auto IPL. Has no effect on an LPAR in HCF mode or Dummy mode (treated as "N").
	N	Manual IPL.
IP/DEV# n nnnn		Defines a set of LIP CPU address and device number for each LPAR when auto IPL is specified. With no input in the IP field, the system assumes the smallest available CPU address. Has no effect on an LPAR in HCF mode or Dummy mode.
PARM nnnnnnnn		Defines load parameter for each LPAR when auto IPL is specified. Has no effect on an LPAR in HCF mode or Dummy mode.
VER SER# nn nnnnn for LPARs		Defines a set of version code and serial number of each LPAR. Has no effect on an LPAR in HCF mode or Dummy mode. In VSF mode, alteration of version code is disabled and a possible version code "00" means that the Virtual Server assigned to the LPAR is disabled.
F-FUNCTION		Executes the subfunctions 1 thru 4 by the following operation: type F and a subfunction number, and press the Enter key.
	1-DEFINE/L	Enables key input to definition fields for the specified LPAR.
	2-SAVE	Stores the entire definition information of all LPARs. Regardless of system's power-off, the stored information remains unchanged until next execution of this subfunction, its counterpart on the SLPDEF frame, or the SAVE command.
	3-ACTIVATE/L	Activates the specified LPAR. Upon completion of this subfunction, display of ">" caused by L-LPAR will disappear.
	4-DEACTIVATE/L	Deactivates the specified LPAR. Upon completion of this subfunction, display of ">" caused by L-LPAR will disappear.

© COMPAREX Informationssysteme GmbH

Table 7-8 LPRDEF Frame—Display Fields

Display	Meaning
SCDS	SCDS number(s) of active SCDS(s) currently selected. A pair of SCDS numbers are displayed only in 2-IOCDS mode. Otherwise, only one SCDS number is displayed.
LPAR GROUP	LPAR Group number 0 or 1 currently selected. Displayed only in 2-IOCDS mode.
ACT LPAR nn	Total number of currently-activated LPARs (nn) in both LPAR Groups (0 and 1). Displayed only in 2-IOCDS mode.
S	Status of each LPAR: "A" (activated), "D" (deactivated), "P" (activation pending), or "C" (check-stopped).
MS nnnn at PHYSICAL	Physical total MS size in MB minus Hypervisor-allocated block size (model-dependent unit size boundary in Real MS Capacity Expansion mode; 1MB boundary otherwise).
ES nnnnnn at PHYSICAL	Physical total ES size in MB.
IP (lefthand) n	Physical total or LPAR-wise number of IPs.
CH nnn	Physical total or LPAR-wise number of channel paths.
VER/SER# nn nnnnn at PHYSICAL	Version code and serial number of physical CPU ID.

© COMPAREX Informationssysteme GmbH

7.5 LPRICF Frame

The LPRICF frame-applicable to the C2000-xxA Models and C2000-xxB Models only-displays, and can alter, the definition information related to the Integrated Cryptographic Facility (ICF) for the LPARs configured not as an HCCF-LPAR. For each HCCF-LPAR, all the definition items on this frame are ignored and treated as not specified. Figure 7-10 illustrates the frame image. Tables 7-9 and 7-10 describe the frame commands, the definition fields, and the display fields.

```
         1         2         3         4         5         6         7         8
12345678901234567890123456789012345678901234567890123456789012345678901234567890
 1 LPAR  1 : LPAR0001  LPAR ICF DEFINITION            (LPRICF) YY/MM/DD HH:MM:SS
 2 SCDS    : A0
 3                                            ----CDX BIT MAP----
 4                                                        11 1111
 5 L-LPAR       MODE S  KSU  KE SPC ENA TIM CDX 0123 4567 8901 2345
 6   1 LPAR0001 ESA  A   0   Y   Y   Y   10  0  YYYY NNNN NNNN NNNN
 7   2 LPAR0002 ESA  D   1   N   Y   Y   10  4  NNNN YYNN NNNN NNNN
 8   3 LPAR0003 ESA  D   B   N   N   Y    1  6  NNNN NNYY NNNN NNNN
 9   4 LPAR0004 ESA  D   0   N   N   Y  500  8  NNNN NNNN YNNN NNNN
10   5 LPAR0005 ESA  D   0   N   Y   N  100  9  NNNN NNNN NYNN NNNN
11   6 LPAR0006 ESA  D   0   N   N   N  100 10  NNNN NNNN NNYN NNNN
12   7 LPAR0007 ESA  D   B   N   Y   Y  100 11  NNNN NNNN NNNY NNNN
13   8 LPAR0008 ESA  D   B   N   Y   Y  100 12  NNNN NNNN NNNN YNNN
14   9 LPAR0009 DMY  D   0   N   N   N  100     NNNN NNNN NNNN NNNN
15  10 LPAR0010 HCF  D       N   N   N  100     NNNN NNNN NNNN NNNN
16
17
18
19 F-FUNCTION            Z-LPAR FRAME INDEX (LPRIDX)
20  1-DEFINE/L           Z+FUNCTION CODE ON LPRIDX
21  2-SAVE                -DIRECT LPAR FRAME CALL
22
```

```
         1         2         3         4         5         6         7         8
12345678901234567890123456789012345678901234567890123456789012345678901234567890
 1  LPAR  1 : LPAR0001  LPAR ICF DEFINITION            (LPRICF) YY/MM/DD HH:MM:SS
 2 SCDS    : A0
 3                                            ----CDX BIT MAP----
 4                                                        11 1111
 5 L-LPAR       MODE S  KSU  KE SPC ENA TIM CDX 0123 4567 8901 2345
 6  11 LPAR0011 ESA  A   0   Y   Y   Y   10  4  NNNN YYNN NNNN NNNN
 7  12 LPAR0012 ESA  D   1   N   Y   Y  100     NNNN NNNN NNNN NNNN
 8  13 LPAR0013 ESA  D   B   N   N   Y  100     NNNN NNNN NNNN NNNN
 9  14 LPAR0014 ESA  D   0   N   N   Y  100     NNNN NNNN NNNN NNNN
10  15 LPAR0015 ESA  D   0   N   Y   N  100     NNNN NNNN NNNN NNNN
11
12
13
14
15
16
17
18
19 F-FUNCTION            Z-LPAR FRAME INDEX (LPRIDX)
20  1-DEFINE/L           Z+FUNCTION CODE ON LPRIDX
21  2-SAVE                -DIRECT LPAR FRAME CALL
22
```

Figure 7-10 LPRICF Frame

Note: *The upper image shows an example of initial or LU-command-specified display, and the lower image shows its LD-command-specified counterpart.*

© COMPAREX Informationssysteme GmbH

Table 7-9 LPRICF Frame—Frame Commands and Definition Fields

Display/Input		Function
L-LPAR and LPAR numbers (each followed by LPAR name)		Specifies the target LPAR by the following operation: type L and an LPAR number (1-15), and press the Enter key. Then, ">" will be displayed on the left of the LPAR number. Instead, entering LA specifies all LPARs at a time. This function must be selected before execution of the frame command suffixed with "/L."
KSU		Defines the Key Storage Unit (KSU) by the target number.
	0	The KSU0 can be used for the LPAR.
	1	The KSU1 can be used for the LPAR.
	B	Both of the KSU numbers can be used for the LPAR.
KE*		Defines enabling/disabling of cryptographic key entry from keytops on KSU.
	Y	Enables the key entry.
	N	Disables the key entry.
SPC*		Defines enabling/disabling of special secure mode.
	Y	Enables the special secure mode.
	N	Disables the special secure mode.
ENA*		Defines allowing/prohibiting use of ICF.
	Y	Allows the LPAR to use the specified ICF(s).
	N	Prohibits the LPAR to use the specified ICF(s).
TIM*		Defines the ICF time-slice value within the range of 1 ms thru 500 ms (absolute value) for the shared-mode IP resource in each LPAR with which a cryptographic instruction is dispatched only to an ICF-installed PIP.
CDX BIT MAP*		Defines specifying of CDX numbers for the LPAR.
	Y	Specifies the CDX number corresponding to the bit position.
	N	Does not specify the CDX number corresponding to the bit position.
F-FUNCTION		Executes the subfunctions 1 and 2 by the following operation: type F and a subfunction number, and press the Enter key.
	1-DEFINE/L	Enables key input to definition fields for the specified LPAR.
	2-SAVE	Stores the entire definition information of all LPARs. The stored information remains unchanged until next execution of this subfunction regardless of system's power-off.

* Not effective on an LPAR in Dummy mode (treated as "N").

© COMPAREX Informationssysteme GmbH

Table 7-10 LPRICF Frame—Display Fields

Display/Input		Function
SCDS		SCDS number(s) of active SCDS(s) currently selected. A pair of SCDS numbers are displayed only in 2-IOCDS mode. Otherwise, only one SCDS number is displayed.
LPAR GROUP		LPAR Group number currently selected. Displayed only in 2-IOCDS mode.
	0	LPAR Group 0.
	1	LPAR Group 1.
ACT LPAR		Total number of currently-activated LPARs (nn) in both LPAR Groups (0 and 1). Displayed only in 2-IOCDS mode.
	nn	
MODE		CPU mode of each LPAR.
	ESA	ESA/390 mode.
	HCF	HCCF-LPAR.
	DMY	Dummy mode.
S		Status of each LPAR.
	A	Activated status.
	D	Deactivated status.
	P	Pending status (activation pending).
	C	Check-stopped state.
CDX*		Display of [the smallest] CDX number for the LPAR.
	nn	Highlighted if the LPAR has more than one CDX.

* Not available on an LPAR in Dummy mode.

© COMPAREX Informationssysteme GmbH

7.6 LPRIDX Frame

The LPRIDX frame displays the menu of selectable LPAR frames in two subindex frames—LPRIDO (Operator Control Frame Index) and LPRIDD (Configuration Definition Frame Index). Figure 7-11 illustrates the LPRIDX frame image. Tables 7-11 and 7-12 describe its frame commands and display fields. Sections 7.6.1 and 7.6.2 describe the subindex frames.

```
          1         2         3         4         5         6         7         8
12345678901234567890123456789012345678901234567890123456789012345678901234567890
 1                     LPAR FRAME INDEX              (LPRIDX)
 2                                                              VER:35-01
 3 LPAR FRAMES                                                 MODE:VSF
 4  S1-LPAR CONTROL FRAMES
 5  S2-LPAR CONFIGURATION FRAMES
 6
 7                 **************((ATTENTION))***************
 8                 *                                        *
 9                 *   POLICY PROFILE HAS BEEN ACTIVATED.   *
10                 *                                        *
11                 *   PLEASE WAIT FOR COMPLETION OR        *
12                 *   DEACTIVATE IT ON LPRPOL FRAME.       *
13                 *                                        *
14                 * PROFILE NO.      : 01                  *
15                 * SCRIPT NO.       : 11                  *
16                 * COMMAND LINE NO. : 01                  *
17                 ******************************************
18
19
20
21 ------------------- COUPLING FACILITY NODE DESCRIPTOR --------------------------
22  TYPE : 009672  MFG : HTC  PLANT : 02  SEQUENCE : 00001  CPCID : 00
```

Figure 7-11 LPRIDX Frame

Table 7-11 LPRIDX Frame—Frame Commands

Display/Input	Function
S1-LPAR CONTROL FRAMES	Calls the LPRIDO frame.
S2-LPAR CONFIGURATION FRAMES	Calls the LPRIDD frame.

Table 7-12 LPRIDX Frame—Display Fields

Display		Meaning
VER		Displays the version of MLPF.
MODE: VSF		Displayed when the system is operating in VSF mode.
COUPLING FACILITY NODE DESCRIPTOR	TYPE	Displays the six-character machine type "009672" on C2000-xxA and C2000-xxC.
	MFG	Displays the three-character manufacturer identification.
	PLANT	Displays the two-character code representing plant of manufacture. Usually 02.
	SEQUENCE	Displays the five-character sequence number.
	CPCID	Displays the two-digit qualifier to identify a central processor complex (CPC). 00 on C2000-xxA and C2000-xxC.
((ATTENTION))		Guidance displayed when a Policy Profile is activated.
PROFILE NO.		Displays the active Policy Profile number.
SCRIPT NO.		Displays the Policy Script number in progress.
COMMAND LINE NO.		Displays the PMC command line number in progress.

© COMPAREX Informationssysteme GmbH

7.6.1 LPRIDO Frame

The LPRIDO frame displays selectable LPAR frames for operator control in “ii-t … t” format where “ii” represents a mnemonic in two characters, and “t … t” represents a frame name. To select a desired frame, type the mnemonic in the command input field and press the Enter key. Figure 7-12 illustrates the frame image. Table 7-13 describes the frame commands.

```
          1         2         3         4         5         6         7         8
12345678901234567890123456789012345678901234567890123456789012345678901234567890
 1                      OPERATOR CONTROL FRAME INDEX    (LPRIDO)
 2                                                              VER:35-01
 3  LPAR CONTROL FRAMES
 4   LO-LPAR OPERATOR CONTROL
 5   LS-LPAR SYSTEM CONTROL
 6   LA-LPAR ALTER/DISPLAY
 7   LC-LPAR ADDRESS COMPARE
 8   LR-LPAR SYSTEM STATUS RECORDING
 9
10   LM-LPAR OPERATOR MESSAGE
11   LU-LPAR MESSAGE SUMMARY
12
13
14
15   LI-LPAR STATUS DISPLAY
16
17
18
19
20
21
22
```

Figure 7-12 LPRIDO Frame

Table 7-13 LPRIDO Frame—Frame Commands

Display/Input	Function
LO-LPAR OPERATOR CONTROL*	Calls the SLPOP frame.
LS-LPAR SYSTEM CONTROL*	Calls the SLPSY frame.
LA-LPAR ALTER/DISPLAY*	Calls the SLPAD frame.
LC-LPAR ADDRESS COMPARE*	Calls the SLPAC frame.
LR-LPAR SYSTEM STATUS…	Calls the LPRSSR frame.
LM-LPAR OPERATOR MESSAGE	Calls the SLPMSG frame.
LU-LPAR MESSAGE SUMMARY	Calls the LPRSUM frame.
LP-LPAR ONLINE PATCH…**	Calls the LPROPC frame.
***	***
LH-LPAR HCCF ONLINE PATCH…**	Calls the SLPOPC frame.
LI-LPAR STATUS DISPLAY	Calls the SLPSTS frame.

* Displayed but not effective on the CF2000-0xA Models.
** Not displayed but effective.
*** Intentionally left blank.

© COMPAREX Informationssysteme GmbH

7.6.2 LPRIDD Frame

The LPRIDD frame displays selectable LPAR frames for configuration definition in “i-t … t” format where “i” represents a mnemonic in one character, and “t … t” represents a frame name. To select a desired frame, type the mnemonic in the command input field and press the Enter key. Figures 7-13 and 7-14 illustrate the frame images by processor model. Table 7-14 describes the frame commands.

```
          1         2         3         4         5         6         7         8
12345678901234567890123456789012345678901234567890123456789012345678901234567890
 1                CONFIGURATION DEFINITION FRAME INDEX (LPRIDD)
 2                                                              VER:35-01
 3  LPAR CONFIGURATION FRAMES
 4   D-LPAR CONFIGURATION DEFINITION
 5   I-LPAR IP NUMERIC DEFINITION
 6   C-LPAR CHANNEL DEFINITION
 7   S-LPAR IO DEVICE
 8   P-LPAR PF KEY DEFINITION
 9   R-LPAR RESOURCE DEFINITION
10   T-LPAR CONTROL DEFINITION
11   M-LPAR STORAGE ASSIGNMENT
12   H-LPAR CHANNEL ASSIGNMENT
13   F-LPAR ICF DEFINITION
14   Q-LPAR IP ASSIGNMENT
15   A-LPAR DEFINITION ASSORTED
16   N-LPAR TIME MACHINE IP DEFINITION
17   X-LPAR TOD-CLOCK
18   Y-LPAR SYSTEM OPTION DEFINITION
19   O-LPAR POLICY DEFINITION
20
21
22
```

Figure 7-13 LPRIDD Frame on C2000-xxA, C2000-xxB, and C2000-xxC

Note: *F-LPAR ICF DEFINITION is not available on C2000-xxC.*

```
          1         2         3         4         5         6         7         8
12345678901234567890123456789012345678901234567890123456789012345678901234567890
 1                CONFIGURATION DEFINITION FRAME INDEX (LPRIDD)
 2                                                              VER:35-01
 3  LPAR CONFIGURATION FRAMES
 4   D-LPAR CONFIGURATION DEFINITION
 5   I-LPAR IP NUMERIC DEFINITION
 6   C-LPAR CHANNEL DEFINITION
 7   S-LPAR IO DEVICE
 8   P-LPAR PF KEY DEFINITION
 9   R-LPAR RESOURCE DEFINITION
10   T-LPAR CONTROL DEFINITION
11   M-LPAR STORAGE ASSIGNMENT
12   H-LPAR CHANNEL ASSIGNMENT
13
14   Q-LPAR IP ASSIGNMENT
15   A-LPAR DEFINITION ASSORTED
16
17   X-LPAR TOD-CLOCK
18   Y-LPAR SYSTEM OPTION DEFINITION
19   O-LPAR POLICY DEFINITION
20
21
22
```

Figure 7-14 LPRIDD Frame on CF2000-0xA

© COMPAREX Informationssysteme GmbH

Table 7-14 LPRIDD Frame—Frame Commands

Display/Input	**Function**
D-LPAR CONFIGURATION…	Calls the LPRDEF frame.
I-LPAR IP NUMERIC DEFINITION	Calls the LPRIPN frame.
C-LPAR CHANNEL DEFINITION	Calls the LPRCH frame.
S-LPAR IO DEVICE*	Calls the SLPDEV frame.
P-LPAR PF KEY DEFINITION	Calls the LPRPFK frame.
R-LPAR RESOURCE DEFINITION	Calls the LPRRSC frame.
T-LPAR CONTROL DEFINITION	Calls the LPRCTL frame.
M-LPAR STORAGE ASSIGNMENT	Calls the LPRSTR frame.
H-LPAR CHANNEL ASSIGNMENT	Calls the LPRCA frame.
F-LPAR ICF DEFINITION	Calls the LPRICF frame. Available only on ICF-installed processor models (C2000-xxA, and C2000-xxB).
Q-LPAR IP ASSIGNMENT	Calls the LPRIPA frame.
A-LPAR DEFINITION ASSORTED	Calls the SLPDEF frame.
N-LPAR TIME MACHINE IP…	Calls the LPRTIP frame. Not available on CF2000-0xA.
X-LPAR TOD-CLOCK	Calls the LPRTOD frame.
Y-LPAR SYSTEM OPTION…	Calls the LPROPT frame.
O-LPAR POLICY DEFINITION	Calls the LPRPOL frame.
**	**

* Displayed but not effective on the CF2000 Models.

** Intentionally left blank.

© COMPAREX Informationssysteme GmbH

7.7 LPRIPA Frame

The LPRIPA frame displays the scheduling information and ICF availability of logical IPs defined on the LPRIPN frame. Figures 7-15 thru 7-16 illustrate the frame images by processor model. Tables 7-15 and 7-16 describe the frame commands, the definition fields, and the display fields.

```
          1         2         3         4         5         6         7         8
12345678901234567890123456789012345678901234567890123456789012345678901234567890
 1  LPAR  1 : LPAR0001  LPAR IP ASSIGNMENT             (LPRIPA) YY/MM/DD HH:MM:SS
 2  SCDS    : A0
 3
 4  LOGICAL IP ASSIGNMENT    0  1  2  3  4
 5     1 LPAR0001  A  5 IP   S  S -D  4  5
 6     2 LPAR0002  D
 7     3 LPAR0003  D
 8     4 LPAR0004  A  3 IP  1S 1S 1S
 9     5 LPAR0005  D
10     6 LPAR0006  A  5 IP   S  S  S #D -S
11     7 LPAR0007  D
12     8 LPAR0008  D
13     9 LPAR0009  D
14    10 LPAR0010  D
15    11 LPAR0011  D
16    12 LPAR0012  D
17    13 LPAR0013  D
18    14 LPAR0014  D
19    15 LPAR0015  D
20
21    ->S-SCHEDULE ASSIGNMENT        I-LOGICAL ICF ASSIGNMENT
22
```

```
          1         2         3         4         5         6         7         8
12345678901234567890123456789012345678901234567890123456789012345678901234567890
 1  LPAR  1 : LPAR0001  LPAR IP ASSIGNMENT             (LPRIPA) YY/MM/DD HH:MM:SS
 2  SCDS    : A0
 3
 4  LOGICAL IP ASSIGNMENT    0  1  2  3  4
 5     1 LPAR0001  A  5 IP   .  . -.  .  .
 6     2 LPAR0002  D
 7     3 LPAR0003  D
 8     4 LPAR0004  A  3 IP   0  .  .
 9     5 LPAR0005  D
10     6 LPAR0006  A  5 IP   0  .  .  . -.
11     7 LPAR0007  D
12     8 LPAR0008  D
13     9 LPAR0009  D
14    10 LPAR0010  D
15    11 LPAR0011  D
16    12 LPAR0012  D
17    13 LPAR0013  D
18    14 LPAR0014  D
19    15 LPAR0015  D
20
21    S-SCHEDULE ASSIGNMENT      ->I-LOGICAL ICF ASSIGNMENT
22
```

Figure 7-15 LPRIPA Frame on C2000-xxA, C2000-xxB, and C2000-xxC

Note: The upper image shows an example of initial or S-command-specified display, and the lower image shows its I-command-specified counterpart.

© COMPAREX Informationssysteme GmbH

```
          1         2         3         4         5         6         7         8
12345678901234567890123456789012345678901234567890123456789012345678901234567890
 LPAR  1 : LPAR0001  LPAR IP ASSIGNMENT            (LPRIPA) YY/MM/DD HH:MM:SS
SCDS    : A0

LOGICAL IP ASSIGNMENT    0  1  2  3  4
   1 HCF1      A  5 IP   S  S -D  4  5
   2 HCF2      D
   3 HCF3      D
   4 HCF4      A  3 IP  1S 1S 1S
   5 HCF5      D
   6 HCF6      A  5 IP   S  S  S #D -S
   7 HCF7      D
   8 HCF8      D
   9 HCF9      D
  10 HCF10     D
  11 HCF11     D
  12 HCF12     D
  13 HCF13     D
  14 HCF14     D
  15 HCF15     D
```

Figure 7-16 LPRIPA Frame on CF2000-0xA

Table 7-15 LPRIPA Frame—Frame Commands

Display/Input	Function
S-SCHEDULE ASSIGNMENT	Displays the scheduling mode of each logical IP. Only displayed when ICF is installed.
I-LOGICAL ICF ASSIGNMENT	Displays whether ICF is available or not. Only displayed when ICF is installed (hence not applicable to CF2000-0xA or C2000-xxC).

Table 7-16 LPRIPA Frame—Display Fields

Display		Meaning
(LIP number)		CPU address.
(LPAR status)		Status of each LPAR: "A" (activated), "D" (deactivated), "P" (activation pending), or "C" (check-stopped).
(No. of LIPs)		Number of LIPs defined to an LPAR.
(LIP status with scheduling mode)		LIP status along with scheduling mode.
	n	Online to physical IP n, dedicated.
	-D	Offline, dedicated.
	#D	Check-stopped, dedicated.
	S	Online, shared, no PIP scheduling group specified.
	Sn	Online, shared, PIP scheduling group n specified.
	-S	Offline, shared.
	#S	Check-stopped, shared.
(LIP status with ICF availability)		LIP status along with ICF availability. Only displayed when ICF is installed (hence not applicable to CF2000-0xA or C2000-xxC).
	.	Online, ICF not available.
	n	Online, ICF available (n = KSU ID).
	-.	Offline, ICF not available.
	-n	Offline, ICF available (n = KSU ID).

© COMPAREX Informationssysteme GmbH

7.8 LPRIPN Frame

The LPRIPN frame displays, and can alter, the following definition information for each LPAR: the number of logical IPs by mode, physical IP scheduling group, Alternate Processor availability, and IP service ratio. Figures 7-17 thru 7-19 illustrate the frame images by processor model. Tables 7-17 and 7-18 describe the frame commands, the definition fields, and the display fields.

```
         1         2         3         4         5         6         7         8
12345678901234567890123456789012345678901234567890123456789012345678901234567890
 1 LPAR  1 : LPAR0001  LPAR IP NUMERIC DEFINITION     (LPRIPN) YY/MM/DD HH:MM:SS
 2 SCDS    : A0
 3                              <DEDICATED>  < SHARED  >
 4                              <INI> <RSV>  <INI> <RSV>  PIP ALT
 5 L-LPAR       MODE ST SUM ICF=  -  +  -  +   -  +  -  +  GRP IP  SRV USG%
 6   1 LPAR0001 ESA  A   6        0  2  0  0   3  0  1  0       N  100 33.3
 7   2 LPAR0002 ESA  A   3        1  0  0  0   2  0  0  0       N  100 22.2
 8   3 LPAR0003 ESA  A   3        0  0  0  0   3  0  0  0       N  100 11.1
 9   4 LPAR0004 ESA  A   1        1  0  0  0   0  0  0  0       N  100 11.1
10   5 LPAR0005 ESA  D   0        0  0  0  0   0  0  0  0       N  100 ****
11   6 LPAR0006 ESA  D   0        0  0  0  0   0  0  0  0       N  100 ****
12   7 LPAR0007 ESA  D   2        0  0  0  0   2  0  0  0       N  100 ****
13   8 LPAR0008 DMY  D   2        0  0  0  0   2  0  0  0       N  100 ****
14   9 LPAR0009 HCF  D   1        0  0  1  0   0  0  0  0       Y  100 ****
15  10 LPAR0010 HCF  A   5        1  0  1  0   3  0  0  0       Y  100 22.2
16                                          LU-LPAR PAGE UP  LD-LPAR PAGE DOWN
17                P-PHYSICAL IP  0  1  2  3  4  5  6  7  8  9  A
18 F-FUNCTION      ICF(KSU ID)   0  .  1  .  .  .  .  .  .  .  .
19  1-DEFINE/L     ALTERNATE IP  .  .  .  .  .  .  .  .  .  .  I
20  2-SAVE         MODE          D  D  D  D  S  -  -  S  S  S  D
21                 PIP GROUP
22
```

```
         1         2         3         4         5         6         7         8
12345678901234567890123456789012345678901234567890123456789012345678901234567890
 1 LPAR  1 : LPAR0001  LPAR IP NUMERIC DEFINITION     (LPRIPN) YY/MM/DD HH:MM:SS
 2 SCDS    : A0
 3                              <DEDICATED>  < SHARED  >
 4                              <INI> <RSV>  <INI> <RSV>  PIP ALT
 5 L-LPAR       MODE ST SUM ICF=  -  +  -  +   -  +  -  +  GRP IP  SRV USG%
 6  11 LPAR0011 ESA  D   0        0  0  0  0   0  0  0  0       N  100 ****
 7  12 LPAR0012 ESA  D   0        0  0  0  0   0  0  0  0       N  100 ****
 8  13 LPAR0013 ESA  D   0        0  0  0  0   0  0  0  0       N  100 ****
 9  14 LPAR0014 ESA  D   1        0  0  1  0   0  0  0  0       N  100 ****
10  15 LPAR0015 ESA  D   5        1  0  1  0   3  0  0  0       N  100 ****
11
12
13
14
15
16                                          LU-LPAR PAGE UP  LD-LPAR PAGE DOWN
17                P-PHYSICAL IP  0  1  2  3  4  5  6  7  8  9  A
18 F-FUNCTION      ICF(KSU ID)   0  .  1  .  .  .  .  .  .  .  .
19  1-DEFINE/L     ALTERNATE IP  .  .  .  .  .  .  .  .  .  .  I
20  2-SAVE         MODE          D  D  D  D  S  -  -  S  S  S  D
21                 PIP GROUP
22
```

Figure 7-17 LPRIPN Frame on C2000-xxA and C2000-xxB (Sheet 1 of 2)

Note: *The upper image denotes C2000-A2A or C2000-A2B in non-VSF mode with two ICFs and one IntCF IP, displayed on the frame call or with LU-LPAR PAGE UP specified.The lower image shows its counterpart with LD-LPAR PAGE DOWN specified.*

© COMPAREX Informationssysteme GmbH

```
          1         2         3         4         5         6         7         8
12345678901234567890123456789012345678901234567890123456789012345678901234567890
 1  LPAR  1 : LPAR0001  LPAR IP NUMERIC DEFINITION     (LPRIPN) YY/MM/DD HH:MM:SS
 2  SCDS    : A0
 3                              <DEDICATED>  < SHARED  >
 4                              <INI> <RSV>  <INI> <RSV>  VS# ALT
 5  L-LPAR       MODE ST SUM ICF=  -  +  -  +   -  +  -  +      IP  SRV USG%
 6    1 LPAR0001 ESA  A   2        0  0  0  0   1  1  1  0   1   N  100 10.0
 7    2 LPAR0002 ESA  A   2        0  0  0  0   1  1  0  0   1   N  100 10.0
 8    3 LPAR0003 ESA  A   4        0  0  0  0   3  1  0  0   2   N  100 10.0
 9    4 LPAR0004 ESA  A   4        0  0  0  0   3  1  0  0   2   N  100 10.0
10    5 LPAR0005 ESA  A   4        0  0  0  0   3  1  0  0   2   N  100 10.0
11    6 LPAR0006 ESA  A   4        0  0  0  0   3  1  0  0   2   N  100 10.0
12    7 LPAR0007 ESA  A   3        0  0  0  0   3  0  0  0   3   N  100 10.0
13    8 LPAR0008 DMY  A   3        0  0  0  0   3  0  0  0   3   N  100 10.0
14    9 LPAR0009 HCF  A   2        0  0  0  0   2  0  0  0   4   Y  100 10.0
15   10 LPAR0010 HCF  A   2        0  0  0  0   2  0  0  0   4   Y  100 10.0
16                                                LU-LPAR PAGE UP  LD-LPAR PAGE DOWN
17                 PHYSICAL IP    0  1  2  3  4  5  6  7  8  9  A
18  F-FUNCTION      ICF(KSU ID)   0  .  1  .  .  .  .  .  .  .  .
19   1-DEFINE/L     ALTERNATE IP  .  .  .  .  .  .  .  .  .  .  I
20   2-SAVE         MODE          S  S  S  S  S  S  S  S  S  S  S
21                  VS#(PIP GRP#) 1  1  2  2  2  2  3  3  3  4  4
22
```

```
          1         2         3         4         5         6         7         8
12345678901234567890123456789012345678901234567890123456789012345678901234567890
 1   LPAR  1 : LPAR0001  LPAR IP NUMERIC DEFINITION     (LPRIPN) YY/MM/DD HH:MM:SS
 2  SCDS    : A0
 3                              <DEDICATED>  < SHARED  >
 4                              <INI> <RSV>  <INI> <RSV>  VS# ALT
 5  L-LPAR       MODE ST SUM ICF=  -  +  -  +   -  +  -  +      IP  SRV USG%
 6   11 LPAR0011 ESA  D   0        0  0  0  0   1  1  0  0   1   N  100 ****
 7   12 LPAR0012 ESA  D   0        0  0  0  0   1  1  0  0   1   N  100 ****
 8   13 LPAR0013 ESA  D   0        0  0  0  0   3  1  0  0   2   N  100 ****
 9   14 LPAR0014 ESA  D   1        0  0  0  0   3  1  0  0   2   N  100 ****
10   15 LPAR0015 ESA  D   3        0  0  0  0   3  0  0  0   3   N  100 ****
11
12
13
14
15
16                                                LU-LPAR PAGE UP  LD-LPAR PAGE DOWN
17                 PHYSICAL IP    0  1  2  3  4  5  6  7  8  9  A
18  F-FUNCTION      ICF(KSU ID)   0  .  1  .  .  .  .  .  .  .  .
19   1-DEFINE/L     ALTERNATE IP  .  .  .  .  .  .  .  .  .  .  I
20   2-SAVE         MODE          S  S  S  S  S  S  S  S  S  S  S
21                  VS#(PIP GRP#) 1  1  2  2  2  2  3  3  3  4  4
22
```

Figure 7-17 LPRIPN Frame on C2000-xxA and C2000-xxB (Sheet 2 of 2)

Note: *The upper image denotes C2000-A2A or C2000-A2B in VSF mode with two ICFs and one IntCF IP, displayed on the frame call or with LU-LPAR PAGE UP specified.The lower image shows its counterpart with LD-LPAR PAGE DOWN specified.*

© COMPAREX Informationssysteme GmbH

```
         1         2         3         4         5         6         7         8
12345678901234567890123456789012345678901234567890123456789012345678901234567890
 1 LPAR  1 : LPAR0001  LPAR IP NUMERIC DEFINITION     (LPRIPN) YY/MM/DD HH:MM:SS
 2 SCDS    : A0
 3                              <DEDICATED>  < SHARED  >
 4                              <INI> <RSV>  <INI> <RSV>  PIP ALT
 5 L-LPAR       MODE ST SUM                                GRP IP  SRV USG%
 6   1 HCF1     HCF  A   6        0     0      5     1          Y  100 33.3
 7   2 HCF2     HCF  A   4        0     0      3     1          Y  100 33.3
 8   3 HCF3     HCF  A   4        0     0      3     1          Y  100 33.3
 9   4 HCF4     HCF  D   0        0     0      0     0          Y  100 ****
10   5 HCF5     HCF  D   0        0     0      0     0          Y  100 ****
11   6 HCF6     HCF  D   0        0     0      0     0          Y  100 ****
12   7 HCF7     HCF  D   2        2     0      0     0          Y  100 ****
13   8 HCF8     HCF  D   2        2     0      0     0          Y  100 ****
14   9 HCF9     HCF  D   0        0     0      0     0          Y  100 ****
15  10 HCF10    HCF  D   0        0     0      0     0          Y  100 ****
16                                          LU-LPAR PAGE UP  LD-LPAR PAGE DOWN
17                P-PHYSICAL IP  0  1  2  3  4  5  6  7  8  9  A
18 F-FUNCTION
19  1-DEFINE/L     ALTERNATE IP  I  I  I  I  I  I  I  I  I  I  I
20  2-SAVE         MODE          S  S  S  S  S  S  S  S  S  S  S
21                 PIP GROUP
22
```

```
         1         2         3         4         5         6         7         8
12345678901234567890123456789012345678901234567890123456789012345678901234567890
 1 LPAR  1 : LPAR0001  LPAR IP NUMERIC DEFINITION     (LPRIPN) YY/MM/DD HH:MM:SS
 2 SCDS    : A0
 3                              <DEDICATED>  < SHARED  >
 4                              <INI> <RSV>  <INI> <RSV>  PIP ALT
 5 L-LPAR       MODE ST SUM                                GRP IP  SRV USG%
 6  11 HCF11    HCF  D   0        0     0      0     0          Y  100 ****
 7  12 HCF12    HCF  D   0        0     0      0     0          Y  100 ****
 8  13 HCF13    HCF  D   0        0     0      0     0          Y  100 ****
 9  14 HCF14    HCF  D   1        0     1      0     0          Y  100 ****
10  15 HCF15    HCF  D   5        1     1      3     0          Y  100 ****
11
12
13
14
15
16                                          LU-LPAR PAGE UP  LD-LPAR PAGE DOWN
17                P-PHYSICAL IP  0  1  2  3  4  5  6  7  8  9  A
18 F-FUNCTION
19  1-DEFINE/L     ALTERNATE IP  I  I  I  I  I  I  I  I  I  I  I
20  2-SAVE         MODE          S  S  S  S  S  S  S  S  S  S  S
21                 PIP GROUP
22
```

Figure 7-18 LPRIPN Frame on CF2000-0xA

Note: *The upper image denotes CF2000-0xA, displayed on the frame call or with LU-LPAR PAGE UP specified. The lower image shows its counterpart with LD-LPAR PAGE DOWN specified.*

© COMPAREX Informationssysteme GmbH

```
         1         2         3         4         5         6         7         8
12345678901234567890123456789012345678901234567890123456789012345678901234567890
 1 LPAR  1 : LPAR0001  LPAR IP NUMERIC DEFINITION     (LPRIPN) YY/MM/DD HH:MM:SS
 2 SCDS    : A0
 3                             <DEDICATED>  < SHARED  >
 4                             <INI> <RSV>  <INI> <RSV>  PIP ALT
 5 L-LPAR       MODE ST                                  GRP IP  SRV USG%
 6   1 LPAR0001 ESA  A   6        2     0      3     1          N  100 33.3
 7   2 LPAR0002 ESA  A   3        1     0      2     0          N  100 22.2
 8   3 LPAR0003 ESA  A   3        0     0      3     0          N  100 11.1
 9   4 LPAR0004 ESA  A   1        1     0      0     0          N  100 11.1
10   5 LPAR0005 ESA  D   0        0     0      0     0          N  100 ****
11   6 LPAR0006 ESA  D   0        0     0      0     0          N  100 ****
12   7 LPAR0007 ESA  D   2        0     0      2     0          N  100 ****
13   8 LPAR0008 DMY  D   2        0     0      2     0          N  100 ****
14   9 LPAR0009 HCF  D   1        0     1      0     0          Y  100 ****
15  10 LPAR0010 HCF  A   5        1     1      3     0          Y  100 22.2
16                                          LU-LPAR PAGE UP  LD-LPAR PAGE DOWN
17               P-PHYSICAL IP  0  1  2  3  4  5  6  7  8  9  A  B  C
18 F-FUNCTION
19  1-DEFINE/L     ALTERNATE IP  .  .  .  .  .  .  .  .  .  .  .  .  I
20  2-SAVE         MODE          D  D  D  D  S  -  -  S  S  S  D  D  D
21                 PIP GROUP
22
```

```
         1         2         3         4         5         6         7         8
12345678901234567890123456789012345678901234567890123456789012345678901234567890
 1 LPAR  1 : LPAR0001  LPAR IP NUMERIC DEFINITION     (LPRIPN) YY/MM/DD HH:MM:SS
 2 SCDS    : A0
 3                             <DEDICATED>  < SHARED  >
 4                             <INI> <RSV>  <INI> <RSV>  PIP ALT
 5 L-LPAR       MODE ST                                  GRP IP  SRV USG%
 6  11 LPAR0011 ESA  D   0        0     0      0     0          N  100 ****
 7  12 LPAR0012 ESA  D   0        0     0      0     0          N  100 ****
 8  13 LPAR0013 ESA  D   0        0     0      0     0          N  100 ****
 9  14 LPAR0014 ESA  D   1        0     1      0     0          N  100 ****
10  15 LPAR0015 ESA  D   5        1     1      3     0          N  100 ****
11
12
13
14
15
16                                          LU-LPAR PAGE UP  LD-LPAR PAGE DOWN
17               P-PHYSICAL IP  0  1  2  3  4  5  6  7  8  9  A  B  C
18 F-FUNCTION
19  1-DEFINE/L     ALTERNATE IP  .  .  .  .  .  .  .  .  .  .  .  .  I
20  2-SAVE         MODE          D  D  D  D  S  -  -  S  S  S  D  D  D
21                 PIP GROUP
22
```

Figure 7-19 LPRIPN Frame on C2000-xxC (Sheet 1 of 2)

Note: *The upper image denotes C2000-C2D in non-VSF mode with one IntCF IP, displayed on the frame call or with LU-LPAR PAGE UP specified.The lower image shows its counterpart with LD-LPAR PAGE DOWN specified.*

© COMPAREX Informationssysteme GmbH

```
          1         2         3         4         5         6         7         8
12345678901234567890123456789012345678901234567890123456789012345678901234567890
 1  LPAR  1 : LPAR0001  LPAR IP NUMERIC DEFINITION     (LPRIPN) YY/MM/DD HH:MM:SS
 2  SCDS    : A0
 3                              <DEDICATED>  < SHARED  >
 4                              <INI> <RSV>  <INI> <RSV>  VS# ALT
 5  L-LPAR       MODE ST SUM                                   IP  SRV USG%
 6    1 LPAR0001 ESA  A   2        0     0      2     1      1   N  100 10.0
 7    2 LPAR0002 ESA  A   2        0     0      2     0      1   N  100 10.0
 8    3 LPAR0003 ESA  A   4        0     0      4     0      2   N  100 10.0
 9    4 LPAR0004 ESA  A   4        0     0      4     0      2   N  100 10.0
10    5 LPAR0005 ESA  A   3        0     0      3     0      3   N  100 10.0
11    6 LPAR0006 ESA  A   3        0     0      3     0      3   N  100 10.0
12    7 LPAR0007 ESA  A   2        0     0      2     0      4   N  100 10.0
13    8 LPAR0008 DMY  A   2        0     0      2     0      4   N  100 10.0
14    9 LPAR0009 HCF  A   2        0     0      2     0      5   Y  100 10.0
15   10 LPAR0010 HCF  A   2        0     0      2     0      5   Y  100 10.0
16                                              LU-LPAR PAGE UP  LD-LPAR PAGE DOWN
17                PHYSICAL IP    0  1  2  3  4  5  6  7  8  9  A  B  C
18  F-FUNCTION
19   1-DEFINE/L     ALTERNATE IP  .  .  .  .  .  .  .  .  .  .  .  .  I
20   2-SAVE         MODE          S  S  S  S  S  S  S  S  S  S  S  S  S
21                  VS#(PIP GRP#) 1  1  2  2  2  2  3  3  3  4  4  5  5
22
```

```
          1         2         3         4         5         6         7         8
12345678901234567890123456789012345678901234567890123456789012345678901234567890
 1  LPAR  1 : LPAR0001  LPAR IP NUMERIC DEFINITION     (LPRIPN) YY/MM/DD HH:MM:SS
 2  SCDS    : A0
 3                              <DEDICATED>  < SHARED  >
 4                              <INI> <RSV>  <INI> <RSV>  VS# ALT
 5  L-LPAR       MODE ST SUM                                   IP  SRV USG%
 6   11 LPAR0011 ESA  D   2        0     0      2     0      1   N  100 ****
 7   12 LPAR0012 ESA  D   2        0     0      2     0      1   N  100 ****
 8   13 LPAR0013 ESA  D   4        0     0      4     0      2   N  100 ****
 9   14 LPAR0014 ESA  D   4        0     0      4     0      2   N  100 ****
10   15 LPAR0015 ESA  D   3        0     0      3     0      3   N  100 ****
11
12
13
14
15
16                                              LU-LPAR PAGE UP  LD-LPAR PAGE DOWN
17                PHYSICAL IP    0  1  2  3  4  5  6  7  8  9  A  B  C
18  F-FUNCTION
19   1-DEFINE/L     ALTERNATE IP  .  .  .  .  .  .  .  .  .  .  .  .  I
20   2-SAVE         MODE          S  S  S  S  S  S  S  S  S  S  S  S  S
21                  VS#(PIP GRP#) 1  1  2  2  2  2  3  3  3  4  4  5  5
22
```

Figure 7-19 LPRIPN Frame on C2000-xxC (Sheet 2 of 2)

Note: *The upper image denotes C2000-C2D in VSF mode with one IntCF IP, displayed on the frame call or with LU-LPAR PAGE UP specified.The lower image shows its counterpart with LD-LPAR PAGE DOWN specified.*

© COMPAREX Informationssysteme GmbH

Table 7-17 LPRIPN Frame—Frame Commands and Definition Fields

Display/Input	Function
L-LPAR and LPAR numbers (each followed by LPAR name)	Specifies the target LPAR by the following operation: type L and an LPAR number (1-15), and press the Enter key. Then, ">" will be displayed on the left of the LPAR number. Instead, entering LA specifies all LPARs at a time. This function must be selected before execution of the frame command suffixed with "/L."
(Logical IP count by mode)	Defines the numbers of logical IPs (LIPs) for a deactivated LPAR within the range of 0 to F. • <DEDICATED> and <SHARED>: Dedicated mode and shared mode. • <INI> and <RSV>: Initial mode and reserved mode. A logical IP in initial mode is installed to an LPAR and onlined at activation. A logical IP in reserved mode is installed to an LPAR at activation, but not onlined. • ICF = - and +: "-" (ICF unavailable) or "+" (ICF available). Not displayed when ICF is not installed on the system (hence not applicable to CF2000-0xA or C2000-xxC).
PIP GRP or VS#	In non-VSF mode, defines the physical IP scheduling group to an activated LPAR within the range of 1 to F or space (undefined). In VSF mode, defines the Virtual Server number to a deactivated LPAR within the range of 1 to F, necessary to activate the LPAR.
ALT IP	Defines the availability of Alternate Processors (APs) to be assigned to LIPs in dedicated mode prior to IPs for the target LPAR. Displayed only when IntCF is supported. Effective only on an LPAR in HCF mode.
Y	Allows assignment of APs to LIPs in dedicated mode prior to IPs.
N	Inhibits the assignment of APs.
SRV	Defines the service ratio (1 through 999) of the physical IP resource in shared mode by all logical IPs in shared mode of each LPAR. This is the relative ratio among LPARs having logical IPs in shared mode.
LU-LPAR PAGE UP	Causes display of the subsequent (larger) LPAR number, if any, by the following operation: type LU and press the Enter key.
LD-LPAR PAGE DOWN	Causes display of the preceding (smaller) LPAR number, if any, by the following operation: type LD and press the Enter key.
F-FUNCTION	Executes the subfunctions 1 and 2 by the following operation: type F and a subfunction number, and press the Enter key.
1-DEFINE/L	Enables key input to the definition fields.
2-SAVE	Stores the entire definition information of all LPARs. The stored information remains unchanged until next execution of this subfunction regardless of system's power-off.
P-PHYSICAL IP	Enables key input to the definition field of "PIP GROUP" by the following operation: type P and press the Enter key. Numbers in the right of this frame command indicate physical IP numbers. Not available in VSF mode.
PIP GROUP	Defines the physical IP (PIP) scheduling group to each physical IP within the range of 1 to F or space (undefined). Not available in VSF mode.

© COMPAREX Informationssysteme GmbH

Table 7-18 LPRIPN Frame—Display Fields

Display		Meaning
SCDS		SCDS number(s) of active SCDS(s) currently selected. A pair of SCDS numbers are displayed only in 2-IOCDS mode. Otherwise, only one SCDS number is displayed.
LPAR GROUP		LPAR Group number currently selected. Displayed in 2-IOCDS mode.
	0	LPAR Group 0.
	1	LPAR Group 1.
ACT LPAR		Total number of currently-activated LPARs (nn) in both LPAR Groups (0 and 1). Displayed only in 2-IOCDS mode.
	nn	
MODE		CPU mode of each LPAR.
	ESA	ESA/390 mode. Not available on the CF2000-0xA Models.
	HCF	HCCF-LPAR.
	DMY	Dummy mode. Not available on the CF2000-0xA Models.
ST		Status of each LPAR: "A" (activated), "D" (deactivated), "P" (activation pending), or "C" (check-stopped).
SUM		Total number of logical IPs defined to each LPAR by the number of 1 through 16, or "**" (above 16).
USG%		Usage ratio of physical IP resource by each LPAR.
ICF (KSU ID)		Key Storage Unit ID or "." (ICF unavailable). Not displayed when ICF is not supported (hence not applicable to CF2000-0xA or C 2000-xxC).
ALTERNATE IP		Type of physical IP. Not displayed when IntCF is not supported.
	.	[Regular] IP.
	I	IntCF IP (AP in online status).
	S	Standby AP (AP in offline status).
MODE		Physical IP scheduling mode.
	D	Dedicated mode. Allocated only to the specified logical IP in dedicated mode.
	S	Shared mode. Allocated to one of specified logical IPs in shared mode.
	I	IntCF mode. Allocated to shared logical IP on HCCF-LPAR.
	-	Offline mode. Not allocated to any logical IP.
	#	Check-stopped mode. Not allocated to any logical IP.
	%	Abend mode. Not allocated to any logical IP.
VS# (PIP GRP#)		Virtual Server number pre-defined to each physical IP. Displayed only in VSF mode.

© COMPAREX Informationssysteme GmbH

7.9 LPRLOG Frame

The LPRLOG frame displays failure description and recovery guidance in the event of an IP failure in LPAR mode. Figure 7-20 shows examples of frame images. Tables 7-19 and 7-20 describe the frame commands and the display fields.

```
          1         2         3         4         5         6         7         8
12345678901234567890123456789012345678901234567890123456789012345678901234567890
1  PAGE XX / YY        LPAR LOG                       (LPRLOG) YY/MM/DD HH:MM:SS
2
3  FAILURE : MACHINE CHECK  DATE : YY/MM/DD HH:MM:SS           MSGID# : MCK00001
4  IP NO.  :  0             MCIC : XXXXXXXX XXXXXXXX           U-PAGE UP
5                                                             D-PAGE DOWN
6  EXPLANATION : SINCE UNRECOVERABLE MACHINE CHECK OCCURRED ON PHYSICAL IP  0,
7                THE IP WENT INTO CHECK STOP STATE. MLPF RECOVERY PROCESS
8                SUCCEEDED. CONTINUE PROCESSING WITHOUT THE IP.
9
10 RESTRICTION : DEPENDING ON MACHINE CHECK CONDITION, THERE IS A POSSIBILITY
11               THAT SOME OPERATION OR PROCESS IS NOT PERFORMED.
12
13 OPERATOR    : IF PERFORMANCE IS NOT SENSITIVE, NO ACTION IS REQUIRED UNTIL IP
14 ACTION        IS REPAIRED. THE MACHINE CHECK IP CAN THEN BE PLACED ONLINE
15               DYNAMICALLY. RECOVERY PROCEDURE IS AS FOLLOWS:
16               .ENTER "SYS IP,OFF=1" CMD ON LPAR FRAME TO BE IP OFFLINE.
17               .PERFORM NECESSARY REPAIRS.
18               .BRING IP ONLINE USING SVP FRAME.
19               .THEN ENTER "SYS IP.ON=X" CMD ON LPAR FRAME TO BE IP ONLINE.
20               .ENTER SCP IP ONLINE CMD ON EACH SCP IF LOGICAL IP IS DEFINED,
21                OR SHUTDOWN ALL SCPS IN ALL ACTIVE LPARS. PERFORM SYSTEM
22                INITIALIZE ("SI" ON OPRCTL FRAME) AND RE-IPL THE SCPS.
```

Figure 7-20 LPRLOG Frame (Sheet 1 of 2)

Note: *This display image shows an example at a disabled wait.*

© COMPAREX Informationssysteme GmbH

```
         1         2         3         4         5         6         7         8
12345678901234567890123456789012345678901234567890123456789012345678901234567890
 1  PAGE XX / YY        LPAR LOG                        (LPRLOG) YY/MM/DD HH:MM:SS
 2
 3  FAILURE : CHECK STOPPED    DATE : YY/MM/DD HH:MM:SS         MSGID# : LIPPR001
 4  IP NO.  : XX               FAILURE LEVEL: XX                U-PAGE UP
 5                                                              D-PAGE DOWN
 6  EXPLANATION : PHYSICAL IP XX CHECK-STOPPED. MLPF APPLICATION PRESERVATION
 7                SUCCEEDED. CONTINUE PROCESSING WITHOUT THE IP.
 8
 9  RESTRICTION : THE DEDICATED ON THE IP XX WAS CHECK-STOPPED.
10
11
12
13  OPERATOR    : NO ACTION IS REQUIRED UNTIL IP IS REPAIRED.
14  ACTION        RECOVERY PROCEDURE IS AS FOLLOWS:
15                .ENTER IP OFFLINE CMD ON LPAR FRAME
16                .PERFORM NECESSARY REPAIRS
17                .BRING IP ONLINE USING SVP FRAME
18                .ENTER IP ONLINE CMD ON LPAR FRAME AFTER REPLACING THE IP
19                .ENTER SCP IP ONLINE CMD ON EACH SCP IF LOGICAL IP IS DEFINED.
20
21
22
```

```
         1         2         3         4         5         6         7         8
12345678901234567890123456789012345678901234567890123456789012345678901234567890
 1  PAGE XX / YY        LPAR LOG                        (LPRLOG) YY/MM/DD HH:MM:SS
 2
 3  FAILURE : CHECK STOPPED    DATE : YY/MM/DD HH:MM:SS         MSGID# : LIPCK001
 4  IP NO.  : XX               FAILURE LEVEL: XX                U-PAGE UP
 5                                                              D-PAGE DOWN
 6  EXPLANATION : PHYSICAL IP XX CHECK-STOPPED. MLPF RECOVERY PROCESS SUCCEEDED.
 7                CONTINUE PROCESSING WITHOUT THE CHECK-STOPPED IP.
 8
 9  RESTRICTION : LOGICAL IP YY OF GROUP X LPAR XX CHECK-STOPPED.
10
11
12
13  OPERATOR    : IF PERFORMANCE IS NOT SENSITIVE, NO ACTION IS REQUIRED UNTIL IP
14  ACTION        IS REPAIRED. THE CHECK-STOPPED IP CAN THEN BE PLACED ONLINE
15                DYNAMICALLY. RECOVERY PROCEDURE IS AS FOLLOWS:
16                .ENTER IP OFFLINE CMD ON LPAR FRAME
17                .PERFORM NECESSARY REPAIRS
18                .BRING IP ONLINE USING SVP FRAME
19                .ENTER IP ONLINE CMD ON LPAR FRAME AFTER REPLACING THE IP
20                .ENTER SCP IP ONLINE CMD ON EACH SCP IF LOGICAL IP IS DEFINED.
21                 OR ENTER DEACT CMD TO RESET ALL LIPS.
22
```

Figure 7-25 LPRLOG Frame (Sheet 2 of 2)

Note: *The upper image shows an example at a check stop when Process Succession is successful. The lower image shows an example at a check stop when Process Succession is not successful or not available.*

© COMPAREX Informationssysteme GmbH

Table 7-19 LPRLOG Frame—Frame Commands

Display	Function
U-PAGE UP	Causes display of the subsequent (newer) IP failure log by the following operation: type U and press the Enter key.
D-PAGE DOWN	Causes display of the preceding (older) IP failure log by the following operation: type D and press the Enter key.

Table 7-20 LPRLOG Frame—Display Fields

Display	Meaning
PAge xx/yy	Current page (XX) in the total page (YY) of failure logs.
failure	Type of failure.
date	Date and time of failure occurrence (detection).
msgid#	Failure ID and sequence number.
ip no.	IP number where failure is detected.
mcic	MCIC. This information is displayed at an MLPF abend or a machine check other than IP check stop (exclusive with “FAILURE LEVEL”).
FAILURE LEVEL	Internal recovery information number in MLPF Hypervisor (decimal number 0 to 10). This information is displayed at an IP check stop (exclusive with “MCIC”).
EXPLANATION	Failure description. May contain reference to LPAR Group 0 or 1 as applicable in 2-IOCDS mode; may contain reference to LPAR Group 0 otherwise, despite the then absence of LPAR Group.
RESTRICTION	Restriction due to failure occurrence. May contain reference to LPAR Group 0 or 1 as applicable in 2-IOCDS mode; may contain reference to LPAR Group 0 otherwise, despite the then absence of LPAR Group.
OPERATOR ACTION	Recovery guidance to the operator. May contain reference to LPAR Group 0 or 1 as applicable in 2-IOCDS mode; may contain reference to LPAR Group 0 otherwise, despite the then absence of LPAR Group.

© COMPAREX Informationssysteme GmbH

7.10 LPROPC Frame

The LPROPC frame provides for installing/deinstalling online patches for MLPF Hypervisor. Figure 7-21 illustrates the frame image. Tables 7-21 and 7-22 describe the frame commands, the definition fields, and the display fields.

To call this frame on one console, the other consoles are required to display the LPRIDX frame. During any command execution on the LPROPC frame, further command execution on any other frame will be held pending.

```
          1         2         3         4         5         6         7         8
12345678901234567890123456789012345678901234567890123456789012345678901234567890
 1                    LPAR ONLINE PATCH CONTROL        (LPROPC) YY/MM/DD HH:MM:SS
 2  SELECT S1-S3      UNIT(S1) ST(S2)          ECN(S3)
 3                    31-02-23
 4  CURRENT REV       --------------------PATCH STATUS--------------------------
 5  (31-02-2A)        UNIT REV STATUS COMPDATE ECN NO. TITLE
 6                    31-02-24 A-COMP 96/12/01 HYCF020 SMALL PROBLEM
 7  LAST UNIT REV#    31-02-25 DISBL  96/12/08 HYCF021 DANGEROUS PATCH
 8  (31-02-23)        31-02-26 N-SYS  96/12/15 HYCF022 MODIFY LOADER
 9  U-PAGE UP         31-02-27 COMP   96/12/22 HYCF023 GOOD PATCH
10  D-PAGE DOWN       31-02-28 OLD-NG 97/01/01 HYCF024 INCORRECT PATCH
11                    31-02-29 D-CMP  97/01/08 HYCF025 CAUSE OTHER PROBLEM
12  E-EXECUTE         31-02-2A AWAIT  97/01/15 HYCF026 1106 ABEND PART3
13
14
15  F-FUNCTION
16   5-READ FILE
17   6-INSTALL
18   7-INSTALL-F
19   8-DEINSTALL-P
20   9-DEINSTALL-A
21
22
```

Figure 7-21 LPROPC Frame

Table 7-21 LPROPC Frame—Frame Commands and Definition Fields

Display/Input	Function (Sheet 1 of 2)
SELECT S1-S3	Selects the patch file display mode by the following operation: type S1, S2 or S3, press the Enter key, type a parameter in the relevant definition field UNIT(S1), ST(S2) or ECN(S3), and press the Enter key. • S1: Status listing of patch files in the ascending order of the unit revision, starting from the one specified in the UNIT(S1) field. • S2: Status listing of patch files, the status parameter of which is specified in the ST(S2) field, in the ascending order of the unit revision. • S3: Status listing of patch files in the ascending order of the ECN number, starting from the one specified in the ECN(S3) field.
U-PAGE UP	Causes display of the subsequent status listing of patch files by the following operation: type U and press the Enter key.
D-PAGE DOWN	Causes display of the preceding status listing of patch files by the following operation: type D and press the Enter key.
E-EXECUTE	Executes the function specified with the F command by the following operation: type E and press the Enter key.

© COMPAREX Informationssysteme GmbH

Display/Input	Function (Sheet 2 of 2)
F-FUNCTION	Specifies the subfunctions 5 thru 9 by the following operation: type F and a subfunction number, and press the Enter key.
5-READ FILE	Reads and verifies the patch file contents from the Verified Patch Data file.
6-INSTALL	Reads and verifies the patch file contents from the Verified Patch Data file, and, if successful with all the patch files, installs the patches into Hypervisor.
7-INSTALL-F	Reads and verifies the patch file contents from the Verified Patch Data file, and, if successful with all or part of the patch files, installs the successfully verified patches into Hypervisor.
8-DEINSTALL-P	Deinstalls the patches last-installed by the F6 or F7 subfunction. Once this F8 subfunction is executed, further execution of this subfunction results in no operation until next execution of the F6 or F7 subfunction.
9-DEINSTALL-A	Deinstalls all the patches installed by the F6 and F7 subfunctions. Once this F9 subfunction is executed, further execution of this subfunction results in no operation until next execution of the F6 or F7 subfunction.
UNIT(S1)	Specifies the starting unit revision for the patch file display mode of S1.
ST(S2)	Specifies the status parameter for the patch file display mode of S2.
AWAIT	Awaiting for installation.
A-COMP	Automatically installed upon SYSTEM INITIALIZE on the OPRCTL frame.
COMP	Installed with the F6 or F7 subfunction.
DISBL	Disabled (prohibited) against installation.
D-CMP	Once installed and now deinstalled.
N-SYS	Needing SYSIML for installation.
OLD-NG	Installation suppressed because of incorrect old pattern.
ECN(S3)	Specifies the starting ECN number for the patch file display mode of S3.

Table 7-22 LPROPC Frame – Display Fields

Display		Meaning
CURRENT REV (nn-nn-nn)		Unit revision of the last-installed patch file.
LAST UNIT REV# (nn-nn-nn)		Unit revision of the last-read patch file.
PATCH STATUS		Status listing of patch files.
	UNIT REV	Unit revision.
	STATUS	Status (same as defined in the ST(S2) field).
	COMPDATE	Date when the status is determined.
	ECN NO	ECN number.
	TITLE	ECN title.

© COMPAREX Informationssysteme GmbH

7.11 LPROPT Frame

The LPROPT frame defines the setting of the MLPF system options: Auto Save, SYSACT Partition, Confirmation, and Policy Error Suppression. Figure 7-22 illustrates the frame image. Tables 7-23 and 7-24 describe the frame command, the definition fields, and the display fields. Any information defined on this frame is automatically saved, regardless of the Auto Save setting, at every pressing of the Enter key on this frame.

```
          1         2         3         4         5         6         7         8
12345678901234567890123456789012345678901234567890123456789012345678901234567890
 1 LPAR  1 : LPAR0001  LPAR SYSTEM OPTION DEFINITION  (LPROPT) YY/MM/DD HH:MM:SS
 2 SCDS    : A0 / A1   LPAR GROUP : 0                ACT LPAR :  1 (MAX15)
 3
 4    OPTION ITEM     ENABLE    OPTION ITEM     ENABLE    OPTION ITEM     ENABLE
 5   1 AUTO SAVE          N
 6
 7   2 SYSACT PARTITION   N
 8
 9   3 CONFIRMATION       N
10
11   4 POLICY ERR SKIP    N
12
13
14
15
16
17
18
19
20  F-FUNCTION             Z-LPAR FRAME INDEX (LPRIDX)
21   1-DEFINE              Z+FUNCTION CODE ON LPRIDX
22                          -DIRECT LPAR FRAME CALL
```

Figure 7-22 LPROPT Frame

Table 7-23 LPROPT Frame—Frame Commands and Definition Fields

Display/Input		Function
F-FUNCTION 1-DEFINE		Enables key input to definition fields by entering F1.
OPTION ITEM and ENABLE		Defines the setting of the target MLPF system option (shown in the OPTION ITEM field) to all LPARs by entering Y (enable) or N (disable) in the ENABLE field.
	AUTO SAVE	Auto Save fast-saves every definition information with each pressing of the Enter key. By contrast, normal save operation causes all definition information on the subject LPAR frame to be saved at a time.
	SYSACT PARTITION	Specifies whether to enable (Y) or disable (N) the partitioned activity display on the SYSACT frame. • Y: Displays each LPAR busy rate in proportion to the total IP resource allocated to the target LPAR. • N: Displays each LPAR busy rate in proportion to the total IP resource in the processor complex.
	CONFIRMATION	Specifies whether to enable (Y) or disable (N) every confirmation prompt prior to execution of applicable commands as detailed in Table 7-25.
	POLICY ERR SKIP	Specifies whether to continue (Y) or terminate (N) MLPF Policy execution when an error occurs.

© COMPAREX Informationssysteme GmbH

Table 7-24 LPROPT Frame—Display Fields

Display		**Meaning**
SCDS		SCDS number(s) of active SCDS(s) currently selected. A pair of SCDS numbers are displayed only in 2-IOCDS mode. Otherwise, only one SCDS number is displayed.
LPAR GROUP		LPAR Group number currently selected. Displayed only in 2-IOCDS mode.
	0	LPAR Group 0.
	1	LPAR Group 1.
ACT LPAR		Total number of currently-activated LPARs (nn) in both LPAR Groups (0 and 1). Displayed only in 2-IOCDS mode.
	nn	

Table 7-25 LPROPT Frame—Target Commands for Confirmation Option

Confirmation Measure	**Command Type**	**Command**		
Double action	Frame command	LPRDEF	F-FUNCTION	4-DEACTIVATE/L
		SLPDEF	F-FUNCTION	4-DEACTIVATE/SL
		SLPOP	O-OPERATOR FUNCTION	2-RESTART/S
				3-SYSTEM RESET/S
				4-LOAD/S
				6-SYSTEM RESET (CLEAR)
				7-LOAD (CLEAR)/S
				8-LPAR INTIALIZE
				9-LOAD (REWIND)/S
			H-STOP LOGICAL IP/S (including HA)	
	LPAR control command	DEACTIVATE		
		SYSTEM CHP, OFF		
		SYSTEM HCCFDUMP		
		SYSTEM IP, OFF		
		SYSTEM IPL		
		SYSTEM RESET		
		SYSTEM RESTART		
		SYSTEM STOP		
Warning message	Frame command	LPRCH	F-FUNCTION	1-DEFINE
		SLPSY	C-INITIALIZE SYSTEM CONTROL PROGRAM/S	
			D-INITIATE STAND ALONE DUMP/S	
			P-PSW RESTART/S	
			H-STOP LOGICAL IP/S	

© COMPAREX Informationssysteme GmbH

7.12 LPRPFK Frame

The LPRPFK frame defines command texts for PF keys for LPARs. When a command text has been entered with “/E” suffix, pressing of the applicable PF key executes the specified command. When a command text has been entered without “/E” suffix, pressing of the applicable PF key only displays the specified command, in which case the command execution needs pressing of the Enter key. Figure 7-23 illustrates the frame image. Tables 7-26 and 7-27 describe the frame commands, the definition fields, and the display fields.

```
          1         2         3         4         5         6         7         8
12345678901234567890123456789012345678901234567890123456789012345678901234567890
 1 LPAR  1 : LPAR0001  LPAR PF KEY DEFINITION         (LPRPFK) YY/MM/DD HH:MM:SS
 2 SCDS    : A0 / A1   LPAR GROUP : 0                ACT LPAR :  1 (MAX15)
 3
 4   PF1   (                                                              )
 5   PF2   (                                                              )
 6   PF3   (                                                              )
 7   PF4   (                                                              )
 8   PF5   (                                                              )
 9   PF6   (                                                              )
10   PF7   (                                                              )
11   PF8   (                                                              )
12   PF9   (                                                              )
13   PF10  (                                                              )
14   PF11  (                                                              )
15   PF12  (                                                              )
16
17
18
19 F-FUNCTION             Z-LPAR FRAME INDEX (LPRIDX)              U-PAGE UP
20  1-DEFINE              Z+FUNCTION CODE ON LPRIDX                D-PAGE DOWN
21  2-SAVE                 -DIRECT LPAR FRAME CALL
22
```

Figure 7-23 LPRPFK Frame

Table 7-26 LPRPFK Frame—Frame Commands and Definition Fields

Display/Input		Function
PF1 thru PF12 (x … x)		Defines PF key texts.
F-FUNCTION		Executes the subfunctions 1 and 2 by the following operation: type F and a subfunction number, and press the Enter key.
	1-DEFINE	Enables key input of a command text for each PF key.
	2-SAVE	Saves the PF key texts entered on the CD into the LPAR control file.
U-PAGE UP		Causes display of subsequent PF key information by the following operation: type U and press the Enter key.
D-PAGE DOWN		Causes display of preceding PF key information by the following operation: type D and press the Enter key.

Table 7-27 LPRPFK Frame—Display Fields

Display		Meaning
SCDS		SCDS number(s) of active SCDS(s) currently selected. A pair of SCDS numbers are displayed only in 2-IOCDS mode. Otherwise, only one SCDS number is displayed.
LPAR GROUP		LPAR Group number currently selected. Displayed only in 2-IOCDS mode.
	0	LPAR Group 0.
	1	LPAR Group 1.
ACT LPAR		Total number of currently-activated LPARs (nn) in both LPAR Groups (0 and 1). Displayed only in 2-IOCDS mode.
	nn	

© COMPAREX Informationssysteme GmbH

7.13 LPRPOL Frame

The LPRPOL frame displays and defines the following information on MLPF Policy: the Policy PMC commands, the numbers and names of Policy profiles and Policy script files, the Policy execution time, and the Policy profile activation. Figures 7-24 thru 7-27 illustrate the frame images. Tables 7-28 thru 7-30 describe the frame commands, the definition fields, and the display fields.

```
          1         2         3         4         5         6         7         8
12345678901234567890123456789012345678901234567890123456789012345678901234567890
 1 LPAR  1 : LPAR0001  MLPF POLICY DEFINITION        (LPRPOL) YY/MM/DD HH:MM:SS
 2 SCDS    : A0 / A1   LPAR GROUP : 0                 ACT LPAR :  1 (MAX15)
 3 S-SELECTED PROFILE  : 01    PROFILE NAME : SAMP001   P-PROFILE STATUS : ACT
 4 NO. DATE/EVENT  TIME              NO.     POLICY SCRIPT NAME      CLASS : N
 5  1  1999/01/01  00:00             01      HOLYDAYS
 6  2  EVERYDAY    17:00             11      AFTER-5
 7  3  EVERYDAY    09:00             12      9-OCLOCK
 8  4  FRIDAY      17:00             21      WEEKEND
 9  5  MONDAY      09:00             22      NEWWEEK
10  6
11  7
12  8
13  9
14 10
15 11
16 12
17 13
18 14
19 15
20 F-FUNCTION           E-EDIT             L-LIST              EL-EDIT LINE
21  1-DEFINE             >1-POLICY PROFILE   1-POLICY PROFILE LIST
22  2-SAVE                2-POLICY SCRIPT    2-POLICY SCRIPT LIST
```

Figure 7-24 LPRPOL Frame—Policy Profile

```
          1         2         3         4         5         6         7         8
12345678901234567890123456789012345678901234567890123456789012345678901234567890
 1 LPAR  1 : LPAR0001  MLPF POLICY DEFINITION        (LPRPOL) YY/MM/DD HH:MM:SS
 2 SCDS    : A0 / A1   LPAR GROUP : 0                 ACT LPAR :  1 (MAX15)
 3 S-SELECTED SCRIPT NO.: 11    SCRIPT NAME : HOLIDAYS
 4 NO. PMC COMMAND                                                  TARGET
 5  1  (DEACT                                                      ) LPAR0001
 6  2  (DEACT                                                      ) LPAR0001
 7  3  (DEACT                                                      ) LPAR0010
 8  4  (SAVE                                                       )
 9  5  (                                                           )
10  6  (                                                           )
11  7  (                                                           )
12  8  (                                                           )
13  9  (                                                           )
14 10  (                                                           )
15 11  (                                                           )
16 12  (                                                           )
17 13  (                                                           )
18 14  (                                                           )
19 15  (                                                           )
20 F-FUNCTION          E-EDIT             L-LIST               EL-EDIT LINE
21  1-DEFINE            1-POLICY PROFILE    1-POLICY PROFILE LIST
22  2-SAVE             >2-POLICY SCRIPT     2-POLICY SCRIPT LIST
```

Figure 7-25 LPRPOL Frame—Policy Script

© COMPAREX Informationssysteme GmbH

```
          1         2         3         4         5         6         7         8
12345678901234567890123456789012345678901234567890123456789012345678901234567890
 1 LPAR  1 : LPAR0001  MLPF POLICY DEFINITION        (LPRPOL) YY/MM/DD HH:MM:SS
 2 SCDS    : A0 / A1   LPAR GROUP : 0                 ACT LPAR :  1 (MAX15)
 3 POLICY PROFILE LIST
 4 J-JUMP TO SELECT PROFILE NO. : 02
 5 NO. PROFILE NAME  CL   NO. PROFILE NAME  CL   NO. PROFILE NAME  CL
 6  1  EMERGENC      E     2  SAMP001.      N     3  ........      N
 7  4  ........      N     5  ........      N     6  ........      N
 8  7  ........      N     8  ........      N     9  ........      N
 9 10  ........      N    11  ........      N    12  ........      N
10 13  ........      N    14  ........      N    15  ........      N
11 16  ........
12
13
14
15
16
17
18
19
20 F-FUNCTION           E-EDIT             L-LIST
21                        1-POLICY PROFILE  >1-POLICY PROFILE LIST
22  2-SAVE                2-POLICY SCRIPT    2-POLICY SCRIPT LIST
```

Figure 7-26 LPRPOL Frame—Policy Profile List

```
          1         2         3         4         5         6         7         8
12345678901234567890123456789012345678901234567890123456789012345678901234567890
 1 LPAR  1 : LPAR0001  MLPF POLICY DEFINITION        (LPRPOL) YY/MM/DD HH:MM:SS
 2 SCDS    : A0 / A1   LPAR GROUP : 0                 ACT LPAR :  1 (MAX15)
 3 POLICY SCRIPT LIST
 4 J-JUMP TO SELECT SCRIPT NO. : 01
 5 NO. SCRIPT NAME         NO. SCRIPT NAME         NO. SCRIPT NAME
 6  1  HOLIDAYS             2  ........             3  ........
 7  4  ........             5  ........             6  ........
 8  7  ........             8  ........             9  ........
 9 10  ........            11  AFTER-5.            12  9-OCLOCK
10 13  ........            14  ........            15  ........
11 16  ........            17  ........            18  ........
12 19  ........            20  ........            21  WEEKEND.
13 22  NEWWEEK.            23  ........            24  ........
14 25  ........            26  ........            27  ........
15 28  ........            29  ........            30  ........
16 31  ........            32  ........
17
18
19
20 F-FUNCTION           E-EDIT             L-LIST
21                        1-POLICY PROFILE   1-POLICY PROFILE LIST
22  2-SAVE                2-POLICY SCRIPT   >2-POLICY SCRIPT LIST
```

Figure 7-27 LPRPOL Frame—Policy Script List

© COMPAREX Informationssysteme GmbH

Table 7-28 PRPOL Frame—Common Frame Commands

Display		Function
F-FUNCTION		Executes the subfunctions 1 and 2 by the following operation: type F and a sub-function number, and press the Enter key.
	1-DEFINE	Enables key input to the definition fields.
	2-SAVE	Saves the Policy information defined on this frame.
E-EDIT		Executes the subfunctions 1 and 2 by the following operation: type E and a sub-function number, and press the Enter key.
	1-POLICY PROFILE	Displays the Policy Profile to be edited.
	2-POLICY SCRIPT	Displays the Policy Script to be edited.
L-LIST		Executes the subfunctions 1 and 2 by the following operation: type L and a sub-function number, and press the Enter key.
	1-POLICY PROFILE	Displays the list of Policy Profiles.
	2-POLICY SCRIPT	Displays the list of Policy Scripts.
EL-EDIT LINE		Enables input to the NO. fields. Only available on E2-command-specified display.

Table 7-29 LPRPOL Frame—Frame Commands and Definition Fields by Target

Target	Display/Input		Function
POLICY PROFILE	S-SELECTED PROFILE		Specifies Policy Profile number to be edited.
	PROFILE NAME		Defines Policy Profile name.
	P-PROFILE STATUS		Defines Policy Profile status.
		ACT	Activates Policy Profile.
		INACT	Deactivates Policy Profile.
	CLASS		Specifies Policy Profile class.
		E	Emergency class. Only one profile can be specified into the emergency class.
		N	Normal class.
	DATE/EVENT		Defines date or event for scheduled execution.
		yyyy/mm/dd	Specific date. Not available in the emergency-class profile.
		EVERYDAY	Everyday. Not available in the emergency-class profile.
		SUNDAY to SATURDAY	Specified day of week. Not available in the emergency-class profile.
		IMMEDIATE	Immediately at Policy Profile activation.
		FLTIP=n	Specified PIP n at a check stop or disabled wait. (n=0 thru F as applicable)
		FLTIPG=n	Specified PIP group n at a check stop or disabled wait on any of the member PIPs. (n=1 thru F as applicable, or space for no group)
	TIME (hh/mm)		Defines time for scheduled execution. Ignored if IMMEDIATE is specified in DATE field.
	NO.		Specifies the target Policy Script number within 01 to 32.
POLICY SCRIPT	S-SELECTED SCRIPT NO.		Specifies Policy Script number to be edited.
	SCRIPT NAME		Defines Policy Script name.
	PMC COMMAND		Specifies PMC command to be executed.
	TARGET		Specifies the execution target for the PMC command. Entering an LPAR name selects a specific LPAR and leaving the field blank selects the entire system.
POLICY PROFILE LIST	J-JUMP TO SELECT PROFILE NO.		Specifies Policy Profile number to be edited.
POLICY SCRIPT LIST	J-JUMP TO SELECT SCRIPT NO.		Specifies Policy Script number to be edited.

© COMPAREX Informationssysteme GmbH

Table 7-30 LPRPOL Frame—Display Fields

Display	**Meaning**
SCDS	SCDS number(s) of active SCDS(s) currently selected. A pair of SCDS numbers are displayed only in 2-IOCDS mode. Otherwise, only one SCDS number is displayed.
LPAR GROUP	LPAR Group number currently selected. Displayed only in 2-IOCDS mode.
0	LPAR Group 0.
1	LPAR Group 1.
ACT LPAR	Total number of currently-activated LPARs (nn) in both LPAR Groups (0 and 1). Displayed only in 2-IOCDS mode.
nn	
CL (with L1 function)	Policy Profile class: E (emergency) or N (normal).

© COMPAREX Informationssysteme GmbH

7.14 LPRRSC Frame

The LPRRSC frame displays, and can alter, the following definition information for the LPARs configured: service ratio, time-slice value, MS origin, MS size, Reserved MS size, ES origin, ES size and Reserved ES size. Figures 7-28 and 7-29 illustrate the frame images by processor model. Tables 7-31 and 7-32 describe the frame commands, the definition fields, and the display fields.

```
          1         2         3         4         5         6         7         8
12345678901234567890123456789012345678901234567890123456789012345678901234567890
 1 LPAR  1 : LPAR0001  LPAR RESOURCE DEFINITION       (LPRRSC) YY/MM/DD HH:MM:SS
 2 SCDS    : A0
 3 L-LPAR       MODE S  SRV TIM  USG%        MSO  MSE  MSR    ESO    ESE    ESR
 4   1 LPAR0001 ESA  A  150   3  22.5          0  256    0      0    512      0
 5   2 LPAR0002 ESA  A  350   3  23.3        256  256    0             0      0
 6   3 LPAR0003 HCF  A  250   3  16.6        512  256    0             0      0
 7   4 LPAR0004 ESA  A  250   3  37.5        768  256    0    512    512      0
 8   5 LPAR0005 ESA  D   50  50 *****               0    0             0      0
 9   6 LPAR0006 ESA  D   50  50 *****               0    0             0      0
10   7 LPAR0007 ESA  D   50  50 *****               0    0             0      0
11   8 LPAR0008 DMY  D   50  50 *****               0    0             0      0
12   9 LPAR0009 ESA  D   50  50 *****              32    0             0      0
13  10 LPAR0010 ESA  D   50  50 *****              32    0             0      0
14
15                              PHYSICAL  :      1024               1024
16                              MAX ADDR  :      2048               2048
17                              DEFINED   :      1024               1024
18                              ACTIVATED :      1024               1024
19 F-FUNCTION                   REMAINING :         0                  0
20  1-DEFINE/L                  UNIT      :        16                 16
21  2-SAVE                      REMAINING HSA :     8(MB)
22
```

```
          1         2         3         4         5         6         7         8
12345678901234567890123456789012345678901234567890123456789012345678901234567890
 1 LPAR  1 : LPAR0001  LPAR RESOURCE DEFINITION       (LPRRSC) YY/MM/DD HH:MM:SS
 2 SCDS    : A0
 3 L-LPAR       MODE S  SRV TIM  USG%        MSO  MSE  MSR    ESO    ESE    ESR
 4  11 LPAR0011 ESA  D  100  50 *****             256    0           512      0
 5  12 LPAR0012 ESA  D  100  50 *****           0   96    0      0    128     32
 6  13 LPAR0013 HCF  D   50  50 *****             256    0             0      0
 7  14 LPAR0014 ESA  D   50  50 *****               0    0             0      0
 8  15 LPAR0015 ESA  D   50  50 *****               0    0             0      0
 9
10
11
12
13
14
15                              PHYSICAL  :      1024               1024
16                              MAX ADDR  :      2048               2048
17                              DEFINED   :      1024               1024
18                              ACTIVATED :      1024               1024
19 F-FUNCTION                   REMAINING :         0                  0
20  1-DEFINE/L                  UNIT      :        16                 16
21  2-SAVE                      REMAINING HSA :     8(MB)
22
```

Figure 7-28 LPRRSC Frame on C2000-xxA, C2000-xxB, and C2000-xxC

Note: *The upper image shows an example of initial or LU-command-specified display, and the lower image shows its LD-command-specified counterpart.*

© COMPAREX Informationssysteme GmbH

```
          1         2         3         4         5         6         7         8
12345678901234567890123456789012345678901234567890123456789012345678901234567890
 1  LPAR  1 : HCF1      LPAR RESOURCE DEFINITION       (LPRRSC) YY/MM/DD HH:MM:SS
 2  SCDS    : A0
 3  L-LPAR       MODE S  SRV TIM  USG%        MSO  MSE  MSR    ESO    ESE    ESR
 4    1 HCF1     HCF  A  150   3  22.5          0  256    0      0    512      0
 5    2 HCF2     HCF  A  350   3  23.3        256  256    0             0      0
 6    3 HCF3     HCF  A  250   3  16.6        512  256    0             0      0
 7    4 HCF4     HCF  A  250   3  37.5        768  256    0    512    512      0
 8    5 HCF5     HCF  D   50  50 *****              0    0             0      0
 9    6 HCF6     HCF  D   50  50 *****              0    0             0      0
10    7 HCF7     HCF  D   50  50 *****              0    0             0      0
11    8 HCF8     HCF  D   50  50 *****              0    0             0      0
12    9 HCF9     HCF  D   50  50 *****             32    0             0      0
13   10 HCF10    HCF  D   50  50 *****             32    0             0      0
14
15                            PHYSICAL  :      1024              1024
16                            MAX ADDR  :      2048              2048
17                            DEFINED   :      1024              1024
18                            ACTIVATED :      1024              1024
19 F-FUNCTION                 REMAINING :         0                 0
20  1-DEFINE/L                UNIT      :        16                16
21  2-SAVE                    REMAINING HSA :     8(MB)
22
```

```
          1         2         3         4         5         6         7         8
12345678901234567890123456789012345678901234567890123456789012345678901234567890
 1  LPAR  1 : HCF1      LPAR RESOURCE DEFINITION       (LPRRSC) YY/MM/DD HH:MM:SS
 2  SCDS    : A0
 3  L-LPAR       MODE S  SRV TIM  USG%        MSO  MSE  MSR    ESO    ESE    ESR
 4   11 HCF11    HCF  D  100  50 *****             256    0             512      0
 5   12 HCF12    HCF  D  100  50 *****           0   96    0      0    128     32
 6   13 HCF13    HCF  D   50  50 *****             256    0             0      0
 7   14 HCF14    HCF  D   50  50 *****               0    0             0      0
 8   15 HCF15    HCF  D   50  50 *****               0    0             0      0
 9
10
11
12
13
14
15                            PHYSICAL  :      1024              1024
16                            MAX ADDR  :      2048              2048
17                            DEFINED   :      1024              1024
18                            ACTIVATED :      1024              1024
19 F-FUNCTION                 REMAINING :         0                 0
20  1-DEFINE/L                UNIT      :        16                16
21  2-SAVE                    REMAINING HSA :     8(MB)
22
```

Figure 7-29 LPRRSC Frame on CF2000-0xA

Note: *The upper image shows an example of initial or LU-command-specified display, and the lower image shows its LD-command-specified counterpart.*

© COMPAREX Informationssysteme GmbH

Table 7-31 LPRRSC Frame—Frame Commands and Definition Fields

Display/Input	Function
L-LPAR and LPAR numbers (each followed by LPAR name)	Specifies the target LPAR by the following operation: type L and an LPAR number (1-15), and press the Enter key. Then, ">" will be displayed on the left of the LPAR number. Instead, entering LA specifies all LPARs at a time. This function must be selected before execution of the frame command suffixed with "/L."
F-FUNCTION	Executes the subfunctions 1 and 2 by the following operation: type F and a subfunction number, and press the Enter key.
1-DEFINE/L	Enables key input to definition fields for the specified LPAR.
2-SAVE	Stores the entire definition information of all LPARs. The stored information remains unchanged until next execution of this subfunction regardless of system's power-off.
SRV	Defines service ratio (relative value) for each LPAR in three digits.
TIM	Defines time-slice value for the shared-mode IP resource in each LPAR within the range of 1 ms to 100 ms (absolute value). Not applicable to the dedicated-mode IP resource, to which the system-defined fixed value of 500 ms applies.
MSO*	Defines LPAR-wise MS origin in MB in five digits on the boundary of model-dependent unit size (in Real MS Capacity Expansion mode) or 1 MB (otherwise).
MSE*	Defines LPAR-wise MS extent (physical capacity limit) in MB in four digits on the boundary of model-dependent unit size (in Real MS Capacity Expansion mode) or 1 MB (otherwise).
MSR*	Defines LPAR-wise Reserved MS size in MB in four digits on the boundary of model-dependent unit size (in Real MS Capacity Expansion mode) or 1 MB (otherwise).
ESO*	Defines LPAR-wise ES origin in MB in six digits on the boundary of model-dependent unit size (in Real MS Capacity Expansion mode) or 1 MB (otherwise).
ESE*	Defines LPAR-wise ES extent (physical capacity limit) in MB in six digits on the boundary of model-dependent unit size (in Real MS Capacity Expansion mode) or 1 MB (otherwise).
ESR*	Defines LPAR-wise Reserved ES size in MB in six digits on the boundary of model-dependent unit size (in Real MS Capacity Expansion mode) or 1 MB (otherwise).

* Has no effect on an LPAR in Dummy mode.

© COMPAREX Informationssysteme GmbH

Table 7-32 LPRRSC Frame—Display Fields

Display		Meaning
SCDS		SCDS number(s) of active SCDS(s) currently selected. A pair of SCDS numbers are displayed only in 2-IOCDS mode. Otherwise, only one SCDS number is displayed.
LPAR GROUP		LPAR Group number currently selected. Displayed only in 2-IOCDS mode.
	0	LPAR Group 0.
	1	LPAR Group 1.
ACT LPAR		Total number of currently-activated LPARs (nn) in both LPAR Groups (0 and 1). Displayed only in 2-IOCDS mode.
	nn	
MODE		CPU mode of each LPAR.
	ESA	ESA/390 mode. Not available on the CF2000-0xA models.
	HCF	HCCF-LPAR.
	DMY	Dummy mode. Not available on the CF2000-0xA Models.
S		Status of each LPAR.
	A	Activated status.
	D	Deactivated status.
	P	Pending status (activation pending).
	C	Check-stopped state.
USG% nnn.n		Resource usage ratio (percentage).
PHYSICAL		Size of physically-allocated storage in MB.
	n … n (left)	Size of physically-allocated MS minus Hypervisor-allocated block in five digits.
	n … n (right)	Size of physically-allocated ES in six digits.
MAX ADDR		Size of absolutely-allocated storage in MB.
	n … n (left)	Size of absolutely-allocated MS minus Hypervisor-allocated block in five digits.
	n … n (right)	Size of absolutely-allocated ES in six digits.
DEFINED		Total size of storage allocated to LPARs in MB.
	n … n (left)	Total size of MS allocated to LPARs in five digits.
	n … n (right)	Total size of ES allocated to LPARs in six digits.
ACTIVATED		Total size of storage used by activated LPARs in MB.
	n … n (left)	Total size of MS used by activated LPARs in five digits.
	n … n (right)	Total size of ES used by activated LPARs in six digits.
REMAINING		Size of unused storage (PHYSICAL minus ACTIVATED) in MB.
	n … n (left)	Size of unused MS in five digits.
	n … n (right)	Size of unused ES in six digits.
UNIT		Model-dependent (in Real MS Capacity Expansion mode) or common (not in Real MS Capacity Expansion mode) unit size of storage in MB.
	nn (left)	MS unit size in two digits.
	nn (right)	ES unit size in two digits.
REMAINING HSA		Size of unused HSA in MB in three digits. Displayed only when total MS size is more than 2GB.

© COMPAREX Informationssysteme GmbH

7.15 LPRSSR Frame

The LPRSSR frame displays a history of LPAR frame operations after system bring-up in time series. Up to 1024 system status records (SSRs) can be recorded. If the number of LPAR SSRs exceeds 1024, the oldest records are deleted one by one at each addition of a new record. Figure 7-30 illustrates the frame image. Tables 7-33 and 7-34 describe the frame commands, the definition field, and the display fields.

```
          1         2         3         4         5         6         7         8
12345678901234567890123456789012345678901234567890123456789012345678901234567890
 1 LPAR  1 : LPAR0001  LPAR SYSTEM STATUS RECORDING   (LPRSSR) YY/MM/DD HH:MM:SS
 2 SCDS    : A0 / A1   LPAR GROUP : 0                 ACT LPAR :  1 (MAX15)
 3 FACILITIES             SYSTEM STATUS RECORDING                         G L# C
 4  R-RECENT RECORDS      YY/MM/DD HH:MM:SS SSR DATA
 5  E-ENTRY RECORDS    85 98/05/28 17:00:11 LPRF680I : SCRIPT 11 HAS BEEN 0
 6  U-PAGE UP             98/05/28 17:00:10 *POLRC* RTN=0000 MSG=750
 7  D-PAGE DOWN           98/05/28 17:00:07 SAVE
 8  RT-RIGHT              98/05/28 17:00:06 *POLRC* RTN=0000 MSG=750
 9  LT-LEFT               98/05/28 17:00:04 DEFINE RC=NO                  0 1
10  CM-CHANGE DSPLY MODE  98/05/28 17:00:03 *POLRC* RTN=0000 MSG=750
11  FIRST RECORD          98/05/28 17:00:01 DEFINE SRV=100                0 1
12    98/04/15 22:25:42   98/05/28 17:00:00 LPRF678I : SCRIPT 11 HAS BEEN 0
13                        98/05/28 09:20:02 LPRF670I : PROFILE 01 HAS BEE 0
14  LAST RECORD           98/05/28 09:20:01 CALL LPRIDX                       0
15    98/05/28 17:00:11   98/05/28 09:20:00 CALL LPRIDO                       0
16                        98/05/28 09:10:10 F1                                0
17  NUMBER OF RECORDS     98/05/28 09:10:00 E1                                0
18          256           98/05/28 09:00:20 F1                                0
19                        98/05/28 09:00:10 E2                                0
20  CD. NO.    0          98/05/28 09:00:00 CALL LPRPOL                       0
21
22
```

```
          1         2         3         4         5         6         7         8
12345678901234567890123456789012345678901234567890123456789012345678901234567890
 1 LPAR  1 : LPAR0001  LPAR SYSTEM STATUS RECORDING   (LPRSSR) YY/MM/DD HH:MM:SS
 2 SCDS    : A0 / A1   LPAR GROUP : 0                 ACT LPAR :  1 (MAX15)
 3 FACILITIES             SYSTEM STATUS RECORDING                         G L# C
 4  R-RECENT RECORDS      USER ID  HH:MM:SS SSR DATA
 5  E-ENTRY RECORDS    85 HKATOU   17:00:11 LPRF680I : SCRIPT 11 HAS BEEN 0
 6  U-PAGE UP             HKATOU   17:00:10 *POLRC* RTN=0000 MSG=750
 7  D-PAGE DOWN           HKATOU   17:00:07 SAVE
 8  RT-RIGHT              HKATOU   17:00:06 *POLRC* RTN=0000 MSG=750
 9  LT-LEFT               HKATOU   17:00:04 DEFINE RC=NO                  0 1
10  CM-CHANGE DSPLY MODE  HKATOU   17:00:03 *POLRC* RTN=0000 MSG=750
11  FIRST RECORD          HKATOU   17:00:01 DEFINE SRV=100                0 1
12    98/04/15 22:25:42   HKATOU   17:00:00 LPRF678I : SCRIPT 11 HAS BEEN 0
13                        HKATOU   09:20:02 LPRF670I : PROFILE 01 HAS BEE 0
14  LAST RECORD           HKATOU   09:20:01 CALL LPRIDX                       0
15    98/05/28 17:00:11   HKATOU   09:20:00 CALL LPRIDO                       0
16                        HKATOU   09:10:10 F1                                0
17  NUMBER OF RECORDS     HKATOU   09:10:00 E1                                0
18          256           HKATOU   09:00:20 F1                                0
19                        HKATOU   09:00:10 E2                                0
20  CD. NO.    0          HKATOU   09:00:00 CALL LPRPOL
21
22
```

Figure 7-30 LPRSSR Frame

Note: *The upper image shows an example with the YY/MM/DD field specified, and the lower image shows its counterpart with the USER ID field specified.*

© COMPAREX Informationssysteme GmbH

Table 7-33 LPRSSR Frame—Frame Commands and Definition Field

Display/Input	Function
FACILITIES	Selects the mode of LPAR SSR display.
R-RECENT RECORDS	Displays the most recent 16 records (the newest record at the top) by the following operation: type R and press the Enter key.
E-ENTRY RECORDS nnnn	Displays 16 records preceding the specified entry number in time series by the following operation: type E, press the Enter key, type a desired entry number in the definition field, and press the Enter key.
U-PAGE UP	Causes display of the subsequent 16 records by the following operation: type U and press the Enter key.
D-PAGE DOWN	Causes display of the preceding 16 records by the following operation: type D and press the Enter key.
RT-RIGHT	Right-justifies the display text to byte 31 or to the rightmost end of the field by the following operation: type RT and press the Enter key.
LT-LEFT	Left-justifies the display text to byte 31 or to the leftmost end of the field by the following operation: type LT and press the Enter key.
CM-CHANGE DSPLY MODE	Alternately displays the YY/MM/DD field showing dates and the USER ID field showing userids by the following operation: type CM and press the Enter key. The initial display of the LPRSSR frame (just after the frame call) defaults to the YY/MM/DD display.

Table 7-34 LPRSSR Frame—Display Fields

Display	Meaning
SCDS	SCDS number(s) of active SCDS(s) currently selected. A pair of SCDS numbers are displayed only in 2-IOCDS mode. Otherwise, only one SCDS number is displayed.
LPAR GROUP	LPAR Group number currently selected. Displayed only in 2-IOCDS mode.
0	LPAR Group 0.
1	LPAR Group 1.
ACT LPAR	Total number of currently-activated LPARs (nn) in both LPAR Groups (0 and 1). Displayed only in 2-IOCDS mode.
nn	
FIRST RECORD yy/mm/ddhh:mm:ss	Recording date and time for the oldest LPAR SSR.
LAST RECORD yy/mm/ddhh:mm:ss	Recording date and time for the newest LPAR SSR.
NUMBER OF RECORDS nnnn	Number of LPAR SSRs recorded: up to 1024. If the number of LPAR SSRs exceeds 1024, the oldest records are deleted one by one at each addition of new one.
CD. NO. n	CD number. System-defined but meaningless to the user.
G	LPAR Group for the LPAR number displayed in L# field. 0 or 1 as applicable in 2-IOCDS mode; 0 otherwise, despite the then absence of LPAR Group.
L#	Currently selected LPAR number on the SLPxxx frame on the target CD at the time of command input or message output. If the target CD is displaying an LPRxxx frame or a message like LPRL272E automatically appearing during LPAR execution, the LPAR number is not indicated.
C	CD number(s). System-defined but meaningless to the user.

© COMPAREX Informationssysteme GmbH

7.16 LPRSTR Frame

The LPRSTR frame displays, in the descending order of the current MS origin address (= order of activation), the following for the LPARs in the activated status: MS/ES origin, defined MS/ES extent, reserved MS/ES extent, currently-used MS/ES extent and unused MS/ES gap between LPARs. No alteration capability is supported on this frame. Figures 7-31 and 7-32 illustrate the frame images by processor model. Table 7-35 describes the display fields.

```
          1         2         3         4         5         6         7         8
12345678901234567890123456789012345678901234567890123456789012345678901234567890
 1  LPAR  1 : LPAR0001  LPAR STORAGE ASSIGNMENT        (LPRSTR) YY/MM/DD HH:MM:SS
 2  SCDS    : A0
 3  LPAR         MODE      CMSO  MSE  MSR CMSE CMSG   CESO   ESE   ESR  CESE  CESG
 4    2 LPAR0002 ESA        940   64    0   64  508    896   128     0   128   360
 5    1 LPAR0001 ESA        812  128   16  128   16    768   128    32   128    32
 6    3 LPAR0003 HCF        684   44    0   44    0    640   128    32   128    32
 7    6 LPAR0006 ESA        640  128   32  128   32    512   128     0   128     0
 8    4 LPAR0004 ESA        512  128    0  128    0    384   128     0   128     0
 9    5 LPAR0005 ESA        384  128    0  128    0    256   128     0   128     0
10    7 LPAR0007 ESA        256  128    0  128    0    128   128     0   128     0
11    8 LPAR0008 ESA        128  128   32  128   32      0   128    32   128    32
12   10 LPAR0010 ESA         64   64    0   64    0          0     0     0     0
13    9 LPAR0009 DMY          0    0    0    0    0          0     0     0     0
14   12 LPAR0012 ESA       1940   64    0   64    0   1896   128     0   128    24
15   11 LPAR0011 ESA       1812  128   16  128   16   1768   128    32   128    32
16   13 LPAR0013 HCF       1684   44    0   44    0   1640   128    32   128    32
17   15 LPAR0015 ESA       1640  128   32  128   32   1512   128     0   128     0
18   14 LPAR0014 ESA       1512  128    0  128    0   1384   128     0   128     0
19
20                        Z-LPAR FRAME INDEX (LPRIDX)
21                        Z+FUNCTION CODE ON LPRIDX
22                         -DIRECT LPAR FRAME CALL
```

Figure 7-31 LPRSTR Frame on C2000-xxA, C2000-xxB, and C2000-xxC

```
          1         2         3         4         5         6         7         8
12345678901234567890123456789012345678901234567890123456789012345678901234567890
 1  LPAR  1 : HCF1      LPAR STORAGE ASSIGNMENT        (LPRSTR) YY/MM/DD HH:MM:SS
 2  SCDS    : A0
 3  LPAR         MODE      CMSO  MSE  MSR CMSE CMSG   CESO   ESE   ESR  CESE  CESG
 4    2 HCF2     HCF        940   64    0   64    0    896   128     0   128     0
 5    1 HCF1     HCF        812  128   16  128   16    768   128    32   128    32
 6    3 HCF3     HCF        684   44    0   44    0    640   128    32   128    32
 7    6 HCF6     HCF        640  128   32  128   32    512   128     0   128     0
 8    4 HCF4     HCF        512  128    0  128    0    384   128     0   128     0
 9    5 HCF5     HCF        384  128    0  128    0    256   128     0   128     0
10    7 HCF7     HCF        256  128    0  128    0    128   128     0   128     0
11    8 HCF8     HCF        128  128   32  128   32      0   128    32   128    32
12   10 HCF10    HCF         64   64    0   64    0          0     0     0     0
13    9 HCF9     HCF          0   64    0   64    0          0     0     0     0
14   12 HCF12    HCF       1940   64    0   64    0   1896   128     0   128    24
15   11 HCF11    HCF       1812  128   16  128   16   1768   128    32   128    32
16   13 HCF13    HCF       1684   44    0   44    0   1640   128    32   128    32
17   15 HCF15    HCF       1640  128   32  128   32   1512   128     0   128     0
18   14 HCF14    HCF       1512  128    0  128    0   1384   128     0   128     0
19
20                        Z-LPAR FRAME INDEX (LPRIDX)
21                        Z+FUNCTION CODE ON LPRIDX
22                         -DIRECT LPAR FRAME CALL
```

Figure 7-32 LPRSTR Frame on CF2000-0xA

© COMPAREX Informationssysteme GmbH

Table 7-35 LPRSTR Frame—Display Fields

Display		**Meaning**
SCDS		SCDS number(s) of active SCDS(s) currently selected. A pair of SCDS numbers are shown only in 2-IOCDS mode. Otherwise, only one SCDS number is shown.
LPAR GROUP		LPAR Group number currently selected. Displayed only in 2-IOCDS mode.
	0	LPAR Group 0.
	1	LPAR Group 1.
ACT LPAR		Total number of currently-activated LPARs (nn) in both LPAR Groups (0 and 1). Displayed only in 2-IOCDS mode.
	nn	
MODE		CPU mode of each LPAR.
	ESA	ESA/390 mode. Not available on the CF2000-0xA Models.
	HCF	HCCF-LPAR.
	DMY	Dummy mode. Not available on the CF2000-0xA Models.
CMSO n … n		Currently assigned MS origin of each activated LPAR in megabytes.
MSE n … n		Initially defined MS size of each LPAR in megabytes.
MSR n … n		Reserved MS size of each LPAR in megabytes.
CMSE n … n		Currently assigned MS size of each activated LPAR in megabytes.
CMSG n … n		Currently unassigned upward MS size (gap) between activated LPARs in megabytes.
CESO n … n		Currently assigned ES origin of each activated LPAR in megabytes.
ESE n … n		Initially defined ES size of each LPAR in megabytes.
ESR n … n		Reserved ES size of each LPAR in megabytes.
CESE n … n		Currently assigned ES size of each activated LPAR in megabytes.
CESG n … n		Currently unassigned upward ES size (gap) between activated LPARs in megabytes.

© COMPAREX Informationssysteme GmbH

7.17 LPRSUM Frame

The LPRSUM frame displays a list of OS and HCCFA messages and their priorities received by all LPARs under console integration. This frame can be displayed on multiple Console Devices at a time. Figures 7-33 and 7-34 illustrate the frame images by processor model. Tables 7-36 and 7-37 describe the definition field and the display fields.

```
          1         2         3         4         5         6         7         8
12345678901234567890123456789012345678901234567890123456789012345678901234567890
 1 LPAR  1 : LPAR0001  LPAR MESSAGE SUMMARY          (LPRSUM) YY/MM/DD HH:MM:SS
 2 SCDS    : A0
 3 PERIOD(SEC): 10   ON                              SPACE UTILIZATION
 4 LPAR LIST                                        0---+---+---+---100 (%)
 5  NO NAME     MODE ST   MESSAGE PENDING           ***********       TOTAL
 6   1 LPAR0001 ESA   A   HIGH PRIORITY             *****
 7   2 LPAR0002 ESA   A   NONE
 8   3 LPAR0003 HCF   A   LOW PRIORITY              ******
 9   4 LPAR0004 ESA   A   NONE
10   5 LPAR0005 ESA   D   NONE
11   6 LPAR0006 ESA   A   NONE
12   7 LPAR0007 ESA   D   NONE
13   8 LPAR0008 ESA   D   NONE
14   9 LPAR0009 ESA   A   NONE
15  10 LPAR0010 DMY   A   NONE
16
17
18
19                      Z-LPAR FRAME INDEX (LPRIDX)
20                      Z+FUNCTION CODE ON LPRIDX
21                       -DIRECT LPAR FRAME CALL
22
```

```
          1         2         3         4         5         6         7         8
12345678901234567890123456789012345678901234567890123456789012345678901234567890
 1 LPAR  1 : LPAR0001  LPAR MESSAGE SUMMARY          (LPRSUM) YY/MM/DD HH:MM:SS
 2 SCDS    : A0
 3 PERIOD(SEC): 10   ON                              SPACE UTILIZATION
 4 LPAR LIST                                        0---+---+---+---100 (%)
 5  NO NAME     MODE ST   MESSAGE PENDING           ***********       TOTAL
 6  11 LPAR0011 ESA   A   NONE
 7  12 LPAR0012 ESA   D   NONE
 8  13 LPAR0013 ESA   D   NONE
 9  14 LPAR0014 ESA   A   NONE
10  15 LPAR0015 ESA   A   NONE
11
12
13
14
15
16
17
18
19                      Z-LPAR FRAME INDEX (LPRIDX)
20                      Z+FUNCTION CODE ON LPRIDX
21                       -DIRECT LPAR FRAME CALL
22
```

Figure 7-33 LPRSUM Frame on C2000-xxA, C2000-xxB, and C2000-xxC

Note: *The upper image shows an example of initial or LU-command-specified display, and the lower image shows its LD-command-specified counterpart.*

© COMPAREX Informationssysteme GmbH

```
          1         2         3         4         5         6         7         8
12345678901234567890123456789012345678901234567890123456789012345678901234567890
 1  LPAR  1 : HCF1      LPAR MESSAGE SUMMARY          (LPRSUM) YY/MM/DD HH:MM:SS
 2  SCDS    : A0
 3  PERIOD(SEC): 10   ON                               SPACE UTILIZATION
 4  LPAR LIST                                        0---+---+---+---100 (%)
 5   NO NAME     MODE ST   MESSAGE PENDING           ***********       TOTAL
 6    1 HCF1     HCF   A   HIGH PRIORITY             *****
 7    2 HCF2     HCF   A   NONE
 8    3 HCF3     HCF   A   LOW PRIORITY              ******
 9    4 HCF4     HCF   A   NONE
10    5 HCF5     HCF   D   NONE
11    6 HCF6     HCF   A   NONE
12    7 HCF7     HCF   D   NONE
13    8 HCF8     HCF   D   NONE
14    9 HCF9     HCF   A   NONE
15   10 HCF10    HCF   A   NONE
16
17
18
19                      Z-LPAR FRAME INDEX (LPRIDX)
20                      Z+FUNCTION CODE ON LPRIDX
21                       -DIRECT LPAR FRAME CALL
22
```

```
          1         2         3         4         5         6         7         8
12345678901234567890123456789012345678901234567890123456789012345678901234567890
 1  LPAR  1 : HCF1      LPAR MESSAGE SUMMARY          (LPRSUM) YY/MM/DD HH:MM:SS
 2  SCDS    : A0
 3  PERIOD(SEC): 10   ON                               SPACE UTILIZATION
 4  LPAR LIST                                        0---+---+---+---100 (%)
 5   NO NAME     MODE ST   MESSAGE PENDING           ***********       TOTAL
 6   11 HCF11    HCF   A   HIGH PRIORITY             *****
 7   12 HCF12    HCF   A   NONE
 8   13 HCF13    HCF   A   LOW PRIORITY              ******
 9   14 HCF14    HCF   A   NONE
10   15 HCF15    HCF   D   NONE
11
12
13
14
15
16
17
18
19                      Z-LPAR FRAME INDEX (LPRIDX)
20                      Z+FUNCTION CODE ON LPRIDX
21                       -DIRECT LPAR FRAME CALL
22
```

Figure 7-34 LPRSUM Frame on CF2000-0xA

Note: *The upper image shows an example of initial or LU-command-specified display, and the lower image shows its LD-command-specified counterpart.*

© COMPAREX Informationssysteme GmbH

Table 7-36 LPRSUM Frame—Definition Field

Display/Input	Function
PERIOD (SEC): nn ON or OFF	When ON is displayed, entering a parameter in this field specifies auto refreshing mode and interval (1 thru 30 seconds; 10 seconds by default), or manual refreshing mode (0 second) in which the frame display can be refreshed with each pressing of the Esc key. To enable this field for parameter input (from OFF to ON), press the Enter or Esc key; to disable this field for parameter input (from ON to OFF), press the Page Down key.

Table 7-37 LPRSUM Frame—Display Fields

Display		Meaning
SCDS		SCDS number(s) of active SCDS(s) currently selected. A pair of SCDS numbers are displayed only in 2-IOCDS mode. Otherwise, only one SCDS number is displayed.
LPAR GROUP		LPAR Group number currently selected. Displayed only in 2-IOCDS mode.
	0	LPAR Group 0.
	1	LPAR Group 1.
ACT LPAR		Total number of currently-activated LPARs (nn) in both LPAR Groups (0 and 1). Displayed only in 2-IOCDS mode.
	nn	
GROUPS		Presence/absence and priority class of messages received by the other (not currently displayed) LPAR Group. Displayed only in 2-IOCDS mode.
	HIGH PRIORITY	Status in which at least one high priority message is received.
	LOW PRIORITY	Status in which only low priority messages are received.
	NONE	Status in which no message is received.
MODE		CPU mode of each LPAR.
	ESA	ESA/390 mode. Not available on the CF2000-0xA models.
	HCF	HCCF-LPAR.
	DMY	Dummy mode. Not available on the CF2000-0xA Models.
ST		Status of each LPAR.
	A	Activated status.
	D	Deactivated status.
	P	Pending status (activation pending).
	C	Check-stopped state.
MESSAGE PENDING		Presence/absence and priority class of messages received by each LPAR.
	HIGH PRIORITY	Presence of messages including at least one high-priority message.
	LOW PRIORITY	Presence of messages not including any high-priority message.
	NONE	Absence of message.
SPACE UTILIZATION		Amount of messages received by each LPAR, represented in utilization ratio of each message receiving area (up to 16 x 128 message lines).

© COMPAREX Informationssysteme GmbH

7.18 LPRTIP Frame

The LPRTIP frame displays and can alter the status of Time Machine Facility on a specific physical IP. Figures 7-35 and 7-36 illustrate the frame images by processor model. Table 7-38 describes the frame commands and the definition fields. Tables 7-39 and 7-40 further explain the microfilter settings depending on the instruction. Table 7-41 describes the display fields.

```
          1         2         3         4         5         6         7         8
12345678901234567890123456789012345678901234567890123456789012345678901234567890
 1 LPAR  1 : LPAR0001  LPAR TIME MACHINE IP DEFINITION(LPRTIP) YY/MM/DD HH:MM:SS
 2 SCDS    : A0
 3  PHYSICAL  ST 11 IP    IP0:D  IP1:S  IP2:S  IP3:S  IP4:S  IP5:S  IP6:S  IP7:S
 4  TIME MACHINE OPTION       Y      Y      N      N      N      N      N      N
 5  PHYSICAL              IP8:D  IP9:S  IPA:D
 6  TIME MACHINE OPTION       Y      Y      Y
 7
 8 I-INSTRUCTIONS AND CONDITIONS
 9  OP-CODE      EM  EU  EL  CND  UL                LL                SPV PRB
10  SUBTRACT     E   E   E   AND  FFFFFFFF          FFFFFF9D          D   E
11  STORE CLOCK  D                                                     D   E
12  COMPARE      E   E   E   AND  00000063          00000000          D   E
13  COMPARE(L)   E   E   D   AND  00000000 0000F9F9  00000000 0000F0F0  D   E
14
15 C-CONSOLE (TIP/TSO)   : TIP
16 T-TIME MACHINE OPTION : Y
17 SP-SELECT PHYSICAL IP : 0
18
19 F-FUNCTION             Z-LPAR FRAME INDEX (LPRIDX)
20  2-SAVE                Z+FUNCTION CODE ON LPRIDX
21                         -DIRECT LPAR FRAME CALL
22
```

Figure 7-35 LPRTIP Frame on C2000-xxA and C2000-xxB

```
          1         2         3         4         5         6         7         8
12345678901234567890123456789012345678901234567890123456789012345678901234567890
 1 LPAR  1 : LPAR0001  LPAR TIME MACHINE IP DEFINITION(LPRTIP) YY/MM/DD HH:MM:SS
 2 SCDS    : A0
 3  PHYSICAL  ST 13 IP    IP0:D  IP1:S  IP2:S  IP3:S  IP4:S  IP5:S  IP6:S  IP7:S
 4  TIME MACHINE OPTION       Y      Y      N      N      N      N      N      N
 5  PHYSICAL              IP8:D  IP9:S  IPA:D  IPB:D  IPC:D
 6  TIME MACHINE OPTION       Y      Y      Y      Y      Y
 7
 8 I-INSTRUCTIONS AND CONDITIONS
 9  OP-CODE      EM  EU  EL  CND  UL                LL                SPV PRB
10  SUBTRACT     E   E   E   AND  FFFFFFFF          FFFFFF9D          D   E
11  STORE CLOCK  D                                                     D   E
12  COMPARE      E   E   E   AND  00000063          00000000          D   E
13  COMPARE(L)   E   E   D   AND  00000000 0000F9F9  00000000 0000F0F0  D   E
14
15 C-CONSOLE (TIP/TSO)   : TIP
16 T-TIME MACHINE OPTION : Y
17 SP-SELECT PHYSICAL IP : 0
18
19 F-FUNCTION             Z-LPAR FRAME INDEX (LPRIDX)
20  2-SAVE                Z+FUNCTION CODE ON LPRIDX
21                         -DIRECT LPAR FRAME CALL
22
```

Figure 7-36 LPRTIP Frame on C2000-xxC

© COMPAREX Informationssysteme GmbH

Table 7-38 LPRTIP Frame—Frame Commands and Definition Fields

Display/Input	Function
I-INSTRUCTIONS AND CONDI-TIONS	Specifies the microfilter setting for each instruction code: • SUBTRACT: SR, S, SH, SP, SLR, SL • STORE CLOCK: STCK • COMPARE: CR, C, CH, CP • COMPARE(L): CLR, CL, CLI, CLC, CLM • Upon entering I, the parameters EM, EU, EL, CND, UL, LL, SPV and PRB as applicable become acceptable for input.
EM	Enables or disables the microfilter on the specified operation code by entering E or D, respectively.
EU	Enables or disables the microfilter on the specified processing result by entering E or D, respectively. See Table 7-39 for details.
EL	Enables or disables the microfilter on the specified processing result by entering E or D, respectively. See Table 7-39 for details.
CND	Defines the condition for enabling the microfilter. • AND: Enables when both UL and LL are met. • OR: Enables when either UL or LL is met.
UL	Specifies the upper limit for the target instruction code. See Table 7-40 for details.
LL	Specifies the lower limit for the target instruction code. See Table 7-40 for details.
SPV	Enables or disables the microfilter in the PSW mode of Supervisor by entering E or D (default), respectively.
PRB	Enables or disables the microfilter in the PSW mode of Problem by entering E (default) or D, respectively.
C-CONSOLE (…)	Defines the console mode by entering TIP or TSO.
TIP	Targets the microfilter setting to the LPRTIP frame.
TSO	Targets the microfilter setting to the OS.
T-TIME MACHINE OPTION	Changes the status of Time Machine Facility by the following operation: type T, press the Enter key, type Y to enable or N to disable, and press the Enter key.
SP-SELECT PHYSICAL IP n	Specifies the target physical IP number by the following operation: type SP, press the Enter key, type the physical IP number, and press the Enter key.
F-FUNCTION 2-SAVE	Stores the entire definition information of all LPARs by entering F2. The stored information remains unchanged until next execution of this function regardless of system's power-off.

© COMPAREX Informationssysteme GmbH

Table 7-39 LPRTIP Frame—Microfilter Activation Conditions

Instruction Type	Combination of Parameters				Microfilter Action
	EM	EU	EL	CND	
SUBTRACT	D	x	x	x	Disabled
	E	D	D	x	Enabled for non-conditional filtering
	E	D	E	x	Enabled when LL ≤ result
	E	E	D	x	Enabled when result ≤ UL
	E	E	E	AND	Enabled when LL ≤ result and result ≤ UL
	E	E	E	OR	Enabled when LL ≤ result or result ≤ UL
STORE CLOCK	D	x	x	x	Disabled
	E	x	x	x	Enabled
COMPARE and COMPARE (L)	D	x	x	x	Disabled
	E	D	D	x	Enabled for non-conditional filtering
	E	D	E	x	Enabled when LL ≤ MIN
	E	E	D	x	Enabled when MAX ≤UL
	E	E	E	AND	Enabled when LL ≤ MIN and MAX ≤ UL
	E	E	E	OR	Enabled when LL ≤ MIN ≤ UL, OR when LL ≤ MAX ≤ UL

LL: lower limit, UL: upper limit, MIN: smaller operand, MAX: equal or greater operand, x: Don't care

Table 7-40 LPRTIP Frame—Definition Field of UL and LL

Instruction Type	Initial Value	Allowable Value
SUBTRACT	0	Hexadecimal number in 4 bytes or smaller
COMPARE	0	Hexadecimal number in 4 bytes or smaller
COMPARE(L)	0	Hexadecimal number in 8 bytes or smaller

Table 7-41 LPRTIP Frame—Display Fields

Display	Function
SCDS	SCDS number(s) of active SCDS(s) currently selected. A pair of SCDS numbers are displayed only in 2-IOCDS mode. Otherwise, only one SCDS number is displayed.
LPAR GROUP	LPAR Group number currently selected. Displayed only in 2-IOCDS mode.
0	LPAR Group 0.
1	LPAR Group 1.
ACT LPAR	Total number of currently-activated LPARs (nn) in both LPAR
nn	Groups (0 and 1). Displayed only in 2-IOCDS mode.
PHYSICAL ST nn IP	Number of physical IPs installed.
IPn:m	IP number (n) and one of the following scheduling modes (m) of each physical IP: D (dedicated), X (fixed-shared), and L (floating-shared).
Time Machine Option	Status of Time Machine Facility currently specified to each physical IP: Y (enabled) or N (disabled).

© COMPAREX Informationssysteme GmbH

Remarks

- Processing results of SLR and SL instructions are treated as signed 32-bit binary numbers.
- UL and LL of COMPARE(L) instructions are treated as non-signed 32-bit binary numbers.
- When UL or LL of COMPARE(L) instructions exceeds 4 bytes, CLR, CL, CLI and CLM instructions use only the lower 4 bytes as UL or LL (the higher 4 bytes are ignored).
- An operand of CLM instruction designates the one produced after mask control.
- An operand of CLC instruction is always compared with UL or LL in 8 bytes. When the operand of CLC instruction is more than 8 bytes, only the lowest (rightmost) 8 bytes are compared with UL or LL. When the operand of CLC instruction is less than 8 bytes, the operand is first aligned to 8 bytes with zeros filled in the highest (leftmost) bit positions, and then compared with UL or LL.
- The operands of CLI, CH and CLM instructions are first aligned to 4 bytes, and then compared with UL and LL. A sign bit of CH instruction is transferred to first 16 bits.
- The low-order 4 bytes in UL and LL for the following instructions are treated as signed 32-bit binary numbers: SR, S, SH, SL, SLR, CR, C, and CH.
- The microfilter setting is effective only to the specified physical IP(s).
- The I-INSTRUCTIONS AND CONDITIONS command is usable even when any LPAR is in the activated status. In such a case, the user must in advance stop all the logical IPs subject to Time Machine and Time Warp Facilities by the SYSTEM STOP command. Otherwise, the timing of changing the microfilter setting by itself is not guaranteed.
- The SP-SELECT PHYSICAL IP command cannot select a physical IP not installed to the system.
- If there exists a physical IP to which the microfilter is enabled but the Time Machine option is disabled, a warning message will be displayed.

© COMPAREX Informationssysteme GmbH

7.19 LPRTOD Frame

The LPRTOD frame displays the current timer values of the system, the SVP and the External Timer Reference, and also provides each LPAR with LPAR Local TOD and Time Accelerator Facilities. Figures 7-37 thru 7-38 illustrate the frame images by processor model. Tables 7-42 and 7-43 describe the frame commands, the definition fields, and the display fields.

Notes:

- *LPAR Local Offset values are retained regardless of the system's power off.*
- *When an LPAR Local TOD value is specified, MLPF calculates the offset to the system's TOD and displays the result in the LOCAL OFFSET field. Conversely, when an LPAR Local Offset value is specified, MLPF calculates the LPAR Local TOD value and displays the result in the CURRENT TIME (LPAR) field.*
- *All the current timer values displayed on the LPRTOD frame are refreshed by every pressing of the Enter or Esc key.*
- *When the timer value is changed by ETR operation after SYSIML, the LPAR Local TOD values displayed on the LPRTOD frame may differ from the OS timer values. When LPAR Local Offset value is specified under such condition, the timer values of LPAR Local TOD and those of the OS are respectively changed based on the offset value.*
- *By the setting of the LPRTOD frame, the year 2000 testing can be performed in either non-parallel (Local) mode or parallel (ETR) mode configuration without necessitating changes to the OS parameters.*

© COMPAREX Informationssysteme GmbH

```
          1         2         3         4         5         6         7         8
12345678901234567890123456789012345678901234567890123456789012345678901234567890
 1  LPAR  1 : LPAR0001  LPAR TOD CLOCK                 (LPRTOD)  YY/MM/DD HH:MM:SS
 2  SCDS    : A0
 3
 4                      CURRENT TIME(SYSTEM)   OFFSET        TID  PORT
 5    PROCESSOR         1998 /09/11 16:13:14
 6    SVP LOCAL         1998 /09/11 16:13:14   + 00:00:00
 7    EXTERNAL TIME     1998 /09/11 16:13:14                 01   02
 8  L-LPAR       MODE S CURRENT TIME(LPAR)     LOCAL OFFSET  OEN  TA  AMLT
 9    1 LPAR0001 ESA  A 1998 /09/11 16:13:14   + 00:00:00     N   N
10    2 LPAR0002 ESA  A 1998 /09/11 18:13:14   + 02:00:00     Y   N
11    3 LPAR0003 HCF  A 2000 /01/01 00:00:00   + **:**:**     N   N
12    4 LPAR0004 ESA  A 1998 /09/11 13:13:14   - 03:00:00     Y   N
13    5 LPAR0005 ESA  A 1999 /12/30 12:01:23   + **:**:**     N   Y    20
14    6 LPAR0006 ESA  D **** /**/** **:**:**   + 00:00:00     N   N
15    7 LPAR0007 ESA  D **** /**/** **:**:**   + 01:00:00     Y   N
16    8 LPAR0008 ESA  D **** /**/** **:**:**   - 01:00:00     Y   N
17    9 LPAR0009 ESA  D **** /**/** **:**:**   + 00:00:00     N   N
18   10 LPAR0010 DMY  D **** /**/** **:**:**   + 00:00:00     N   N
19  F-FUNCTION
20   2-SAVE      N-NEW DATE/L
21               L-LOCAL OFFSET/L
22               T-TIME ACCELERATOR/L
```

```
          1         2         3         4         5         6         7         8
12345678901234567890123456789012345678901234567890123456789012345678901234567890
 1  LPAR  1 : LPAR0001  LPAR TOD CLOCK                 (LPRTOD)  YY/MM/DD HH:MM:SS
 2  SCDS    : A0
 3
 4                      CURRENT TIME(SYSTEM)   OFFSET        TID  PORT
 5    PROCESSOR         1998 /09/11 16:13:14
 6    SVP LOCAL         1998 /09/11 16:13:14   + 00:00:00
 7    EXTERNAL TIME     1998 /09/11 16:13:14                 01   02
 8  L-LPAR       MODE S CURRENT TIME(LPAR)     LOCAL OFFSET  OEN  TA  AMLT
 9   11 LPAR0011 ESA  A 1998 /09/11 16:13:14   + 00:00:00     N   N
10   12 LPAR0012 ESA  A 1998 /09/11 18:13:14   + 02:00:00     Y   N
11   13 LPAR0013 HCF  A 2000 /01/01 00:00:00   + **:**:**     N   N
12   14 LPAR0014 ESA  A 1998 /09/11 13:13:14   - 03:00:00     Y   N
13   15 LPAR0015 ESA  A 1999 /12/30 12:01:23   + **:**:**     N   Y    20
14
15
16
17
18
19  F-FUNCTION
20   2-SAVE      N-NEW DATE/L
21               L-LOCAL OFFSET/L
22               T-TIME ACCELERATOR/L
```

Figure 7-37 LPRTOD Frame on C2000-xxA, C2000-xxB, and C2000-xxC

Note: *The upper image shows an example of initial or LU-command-specified display, and the lower image shows its LD-command-specified counterpart.*

© COMPAREX Informationssysteme GmbH

```
          1         2         3         4         5         6         7         8
12345678901234567890123456789012345678901234567890123456789012345678901234567890
 1  LPAR  1 : HCF1      LPAR TOD CLOCK                 (LPRTOD)  YY/MM/DD HH:MM:SS
 2  SCDS    : A0
 3
 4                      CURRENT TIME(SYSTEM)   OFFSET        TID  PORT
 5    PROCESSOR         1998 /09/11 16:13:14
 6    SVP LOCAL         1998 /09/11 16:13:14   + 00:00:00
 7    EXTERNAL TIME     1998 /09/11 16:13:14                 01   02
 8  L-LPAR       MODE S CURRENT TIME(LPAR)     LOCAL OFFSET  OEN  TA  AMLT
 9    1 HCF1     HCF  A 1998 /09/11 16:13:14   + 00:00:00     N   N
10    2 HCF2     HCF  A 1998 /09/11 18:13:14   + 02:00:00     Y   N
11    3 HCF3     HCF  A 2000 /01/01 00:00:00   + **:**:**     N   N
12    4 HCF4     HCF  A 1998 /09/11 13:13:14   - 03:00:00     Y   N
13    5 HCF5     HCF  A 1999 /12/30 12:01:23   + **:**:**     N   Y    20
14    6 HCF6     HCF  D **** /**/** **:**:**   + 00:00:00     N   N
15    7 HCF7     HCF  D **** /**/** **:**:**   + 01:00:00     Y   N
16    8 HCF8     HCF  D **** /**/** **:**:**   - 01:00:00     Y   N
17    9 HCF9     HCF  D **** /**/** **:**:**   + 00:00:00     N   N
18   10 HCF10    HCF  D **** /**/** **:**:**   + 00:00:00     N   N
19  F-FUNCTION
20   2-SAVE      N-NEW DATE/L
21               L-LOCAL OFFSET/L
22               T-TIME ACCELERATOR/L
```

```
          1         2         3         4         5         6         7         8
12345678901234567890123456789012345678901234567890123456789012345678901234567890
 1  LPAR  1 : HCF1      LPAR TOD CLOCK                 (LPRTOD)  YY/MM/DD HH:MM:SS
 2  SCDS    : A0
 3
 4                      CURRENT TIME(SYSTEM)   OFFSET        TID  PORT
 5    PROCESSOR         1998 /09/11 16:13:14
 6    SVP LOCAL         1998 /09/11 16:13:14   + 00:00:00
 7    EXTERNAL TIME     1998 /09/11 16:13:14                 01   02
 8  L-LPAR       MODE S CURRENT TIME(LPAR)     LOCAL OFFSET  OEN  TA  AMLT
 9   11 HCF11    HCF  A 1998 /09/11 16:13:14   + 00:00:00     N   N
10   12 HCF12    HCF  A 1998 /09/11 18:13:14   + 02:00:00     Y   N
11   13 HCF13    HCF  A 2000 /01/01 00:00:00   + **:**:**     N   N
12   14 HCF14    HCF  A 1998 /09/11 13:13:14   - 03:00:00     Y   N
13   15 HCF15    HCF  A 1999 /12/30 12:01:23   + **:**:**     N   Y    20
14
15
16
17
18
19  F-FUNCTION
20   2-SAVE      N-NEW DATE/L
21               L-LOCAL OFFSET/L
22               T-TIME ACCELERATOR/L
```

Figure 7-38 LPRTOD Frame on CF2000-0xA

Note: *The upper image shows an example of initial or LU-command-specified display, and the lower image shows its LD-command-specified counterpart.*

© COMPAREX Informationssysteme GmbH

Table 7-42 LPRTOD Frame—Frame Commands and Definition Fields

Display/Input	Function
L-LPAR and LPAR numbers	Same as LPRCTL, LPRDEF, or LPRRSC.
F-FUNCTION	Executes the subfunctions 2, N, L and T by the following operation: type F and a subfunction alphanumeric, and press the Enter key.
2-SAVE	Stores the entire definition information of all LPARs. The stored information remains unchanged until next execution of this subfunction regardless of system's power-off.
N-NEW ...	Enables key input to the CURRENT TIME (LPAR) field, unless the LPAR is deactivated.
L-LOCAL ...	Enables key input to the LOCAL OFFSET and OEN (Offset Enable) fields.
T-TIME ...	Enables key input to the TA (Time Accelerator) and AMLT (Acceleration Multiple) fields, unless the LPAR is deactivated.
CURRENT TIME (LPAR)	Specifies a TOD value for the target LPAR by entering the date and time data based on the time in the CURRENT TIME (SYSTEM) field. Cannot specify or display the year 2040 or later. Such attempt causes "*…*" to be displayed in this field.
LOCAL OFFSET	Specifies an LPAR Local Offset value to the OEN-enabled target LPAR by entering a plus (+) or minus (-) sign (or a blank defaulting to a plus sign) followed by the time data. Cannot display more than 24 hours (indicated by "*…*" in this field).
OEN	Enables or disables the LPAR Local TOD/Offset setting to the target LPAR by entering Y or N, respectively. While Time Accelerator is enabled, the setting of this OEN field cannot be changed.
Y	Enables the LPAR Local TOD/Offset setting.
N	Disables the LPAR Local TOD/Offset setting.
TA	Enables the Time Accelerator setting to the target LPAR by entering Y, or specifies disablement of the Time Accelerator by entering N.
Y	Enables the Time Accelerator setting.
N	Specifies disablement of the Time Accelerator. Deactivation of the subject LPAR in addition to entry of "N" in this field is required.
AMLT	Specifies an acceleration multiplying factor (1–99 in decimal) to the target LPAR by entering an appropriate number.

© COMPAREX Informationssysteme GmbH

Table 7-43 PRTOD Frame—Display Fields

Display			Meaning
SCDS			SCDS number(s) of active SCDS(s) currently selected. A pair of SCDS numbers are displayed only in 2-IOCDS mode. Otherwise, only one SCDS number is displayed.
LPAR GROUP			LPAR Group number currently selected. Displayed only in 2-IOCDS mode.
	0		LPAR Group 0.
	1		LPAR Group 1.
ACT LPAR			Total number of currently-activated LPARs (nn) in both
	nn		LPAR Groups (0 and 1). Displayed only in 2-IOCDS mode.
CURRENT TIME (SYSTEM)			Current settings of processor complex's TOD, SVP Timer, and External Timer Reference (ETR) Timer at the last-refreshed time due to pressing of the Enter or Esc key (not dynamic).
	PROCESSOR		Processor complex's TOD.
	SVP LOCAL		SVP Timer.
	EXTERNAL TIME		ETR Timer.
OFFSET			Offset specified on the SVP.
TID			ETR ID.
PORT			Active port ID.
MODE			CPU mode of each LPAR.
	ESA		ESA/390 mode. Not available on the CF2000-0xA Models.
	HCF		HCCF-LPAR.
	DMY		Dummy mode. Not available on the CF2000-0xA Models.
S			Status of each LPAR.
	A		Activated status.
	D		Deactivated status.
	P		Pending status (activation pending).
	C		Check-stopped state.

Notes on usage of Time Accelerator

- *Processing of Time Accelerator on an LPAR running in ETR (External Timer Reference) mode does not recover from an ETR failure (e.g., ETR synchronization check). The result is unpredictable.*
- *Enabling of Time Accelerator under any of the following conditions may sometimes cause the OS to hang up:*
  - *Time Accelerator is enabled after the OS is IPLed.*
  - *Time Accelerator is enabled with the multiplying factor of 11 or more, and then the OS is IPLed.*
  - *Time Accelerator is enabled with the multiplying factor of 10 or less, then the OS is IPLed, and thereafter the multiplying factor is altered to 31 or more.*

In order to avoid the potential OS hang-up mentioned above, the following procedure and configuration are recommended:

- *Recommended procedure: Enable Time Accelerator with the multiplying factor of 2 thru 10, then IPL the OS, and thereafter alter the multiplying factor to 2 thru 30.*
- *Recommended configuration:*
  - *MS: 256 MB or more*
  - *ES (if installed): 256 MB or more*
  - *OS parameter of MIH: 30 minutes*
  - *OS parameter of LOCKOUT: 15000 (defined by MASDEF statement)*
- *To disable the once enabled Time Accelerator, deactivation of the subject LPAR is required. To stop the running Time Accelerator function temporarily, enter "1" in the AMLT field corresponding to the subject LPAR.*

© COMPAREX Informationssysteme GmbH

7.20 (Intentionally Left Blank)

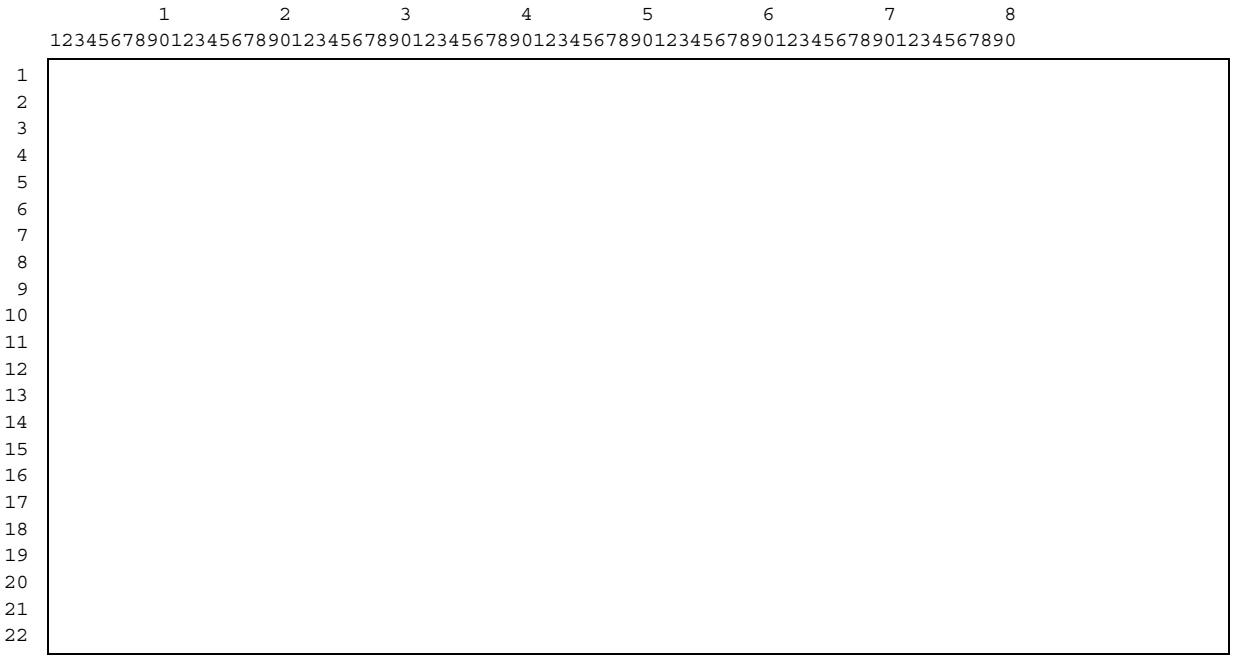

Figure 7-39 (Intentionally Left Blank)

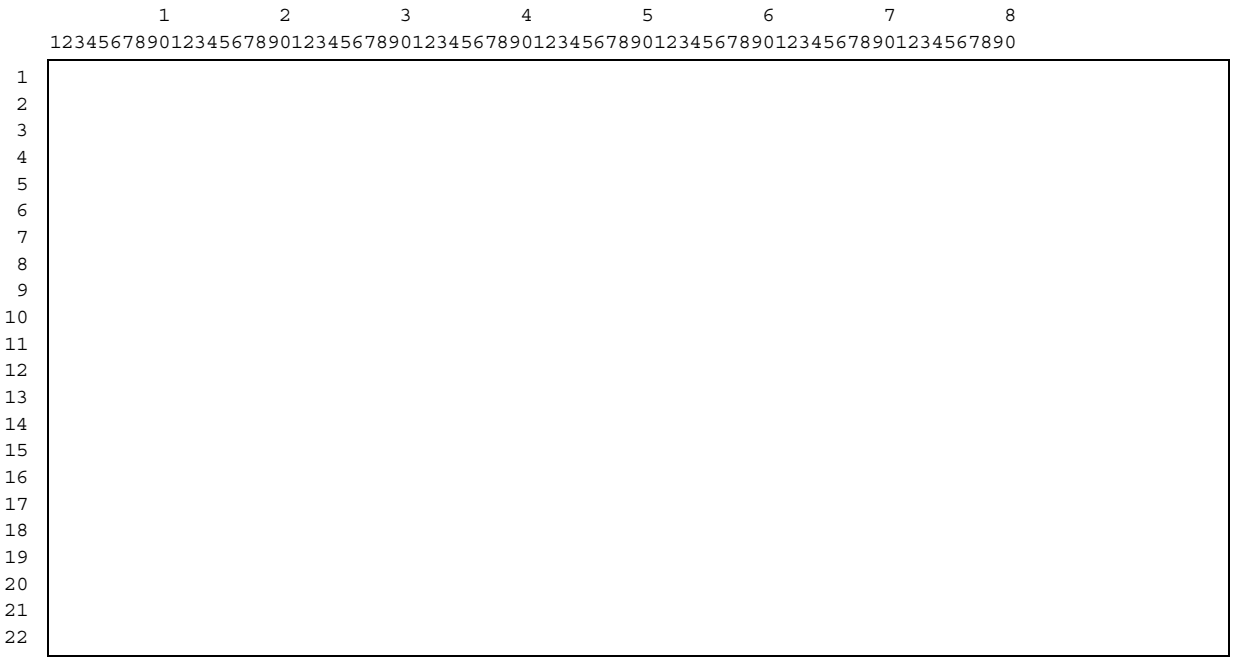

Figure 7-40 (Intentionally Left Blank)

© COMPAREX Informationssysteme GmbH

Table 7-44 (Intentionally Left Blank)

Table 7-45 (Intentionally Left Blank)

© COMPAREX Informationssysteme GmbH

7.21 SLPAC Frame

The SLPAC frame enables address/data compare stop for a selected logical IP of an ESA-mode LPAR. When one frame command is entered before completion of another in progress, their processing order will not be guaranteed. Display and functions of this frame are not available to an LPAR in HCF mode or Dummy mode.

Figures 7-41 and 7-42 illustrate the frame images by processor model. Tables 7-46 and 7-47 describe the frame commands, the definition fields, and the display fields.

```
          1         2         3         4         5         6         7         8
12345678901234567890123456789012345678901234567890123456789012345678901234567890
 1 LPAR  1 : LPAR0001  LPAR ADDRESS COMPARE           (SLPAC)  YY/MM/DD HH:MM:SS
 2 SCDS    : A0
 3 IP ADDR COMP(LOGL)/S
 4  G-OPERATION TYPE/C
 5   1-STORE
 6
 7   3-INSTRUCTION
 8
 9  H-COMPARE ADDRESS/DATA
10   1-STORE ADDR FFFFFFFF    DATA   EQ   FFFFFFFF
11
12   3-INST. ADDR 00100000
13
14  C-COMPARE STOP
15   1-ENABLED
16   2-DISABLED
17
18  SL-SELECT LOGICAL IP : 0
19    0-IP0 CMP-STOP  4-IP4 RUNNING   8-IP8 RUNNING
20    1-IP1 RUNNING   5-IP5 RUNNING   9-IP9 RUNNING
21    2-IP2 RUNNING   6-IP6 RUNNING   A-IPA RUNNING
22    3-IP3 RUNNING   7-IP7 RUNNING
```

Figure 7-41 SLPAC Frame on C2000-xxA and C2000-xxB

```
          1         2         3         4         5         6         7         8
12345678901234567890123456789012345678901234567890123456789012345678901234567890
 1 LPAR  1 : LPAR0001  LPAR ADDRESS COMPARE           (SLPAC)  YY/MM/DD HH:MM:SS
 2 SCDS    : A0
 3 IP ADDR COMP(LOGL)/S
 4  G-OPERATION TYPE/C
 5   1-STORE
 6
 7   3-INSTRUCTION
 8
 9  H-COMPARE ADDRESS/DATA
10   1-STORE ADDR FFFFFFFF    DATA   EQ   FFFFFFFF
11
12   3-INST. ADDR 00100000
13
14  C-COMPARE STOP
15   1-ENABLED
16   2-DISABLED
17
18  SL-SELECT LOGICAL IP : 0
19    0-IP0 CMP-STOP  4-IP4 RUNNING   8-IP8 RUNNING   C-IPC RUNNING
20    1-IP1 RUNNING   5-IP5 RUNNING   9-IP9 RUNNING
21    2-IP2 RUNNING   6-IP6 RUNNING   A-IPA RUNNING
22    3-IP3 RUNNING   7-IP7 RUNNING   B-IPB RUNNING
```

Figure 7-42 SLPAC Frame on C2000-xxC

© COMPAREX Informationssysteme GmbH

Table 7-46 SLPAC Frame—Frame Commands and Definition Fields

Display/Input	Function
IP ADDR COMP (LOGL)/S	Specifies logical address comparison between a compare address and an MS address referenced by the selected IP. Multiple addresses can be specified at a time.
G-OPERATION TYPE/C	Specifies the subfunction 1 or 3 by the following operation: type G1 or G3 and press the Enter key. Another specifying of the same subfunction cancels the former specifying.
1-STORE	Address comparison on store to MS.
3-INSTRUCTION	Address comparison on instruction fetch from MS.
H-COMPARE ADDRESS/DATA	Specifies the subfunction 1 or 3 by the following operation: type H1 or H3, press the Enter key, type (a) necessary parameter(s) in the relevant field(s), and press the Enter key.
1-STORE ADDR nnnnnnnn DATA xx nnnnnnnn	Specifying of 8-digit compare address, 2-character compare data type and 8-digit compare data for address comparison on store to MS. The compare address must reside on 1-byte boundaries. The compare data type must be specified as EQ (equal to data), NE (not equal to data), B0 (with at least one bit of specified mask data being 0), or B1 (with at least one bit of specified mask data being 1). The width of compare data must be specified in bytes as follows: “EQ” in 1 or 4 bytes, “NE” in 1 or 4 bytes, “B0” in 1 byte and “B1” in 1 byte.
3-INST.ADDR nnnnnnnn	Specifying of 8-digit compare address for address comparison on instruction fetch from MS. The compare address must reside on 2-byte boundaries.
C-COMPARE STOP	Specifies the subfunction 1 or 2 by the following operation: type C1 or C2 and press the Enter key.
1-ENABLED	Enabling of compare stop which stops the logical IP on the specified comparison condition.
2-DISABLED	Disabling of compare stop, thus allowing continued LPAR operation regardless of comparison conditions.
SL-SELECT LOGICAL IP : n	Specifies a CPU address of a logical IP to which the address compare function applies. Type SL, press the Enter key, type a CPU address, and press the Enter key. This function must be specified before the other address compare parameters are specified.
n-IPn xxxxxxxx	Displays status of the logical IP(s) belonging to the selected LPAR as follows: • RUNNING: Running. • STOP: Stopped. • CHK-STP: Check-stopped. • RAT-STP: Rate-stopped. • CMP-STP: Compare-stopped. • DS-WAIT: Disabled-waited. • (Space): In error due to unknown cause.

Table 7-47 SLPAC Frame—Display Fields

Display	Meaning
SCDS	SCDS number(s) of active SCDS(s) currently selected. A pair of SCDS numbers are displayed only in 2-IOCDS mode. Otherwise, only one SCDS number is displayed.
LPAR GROUP	LPAR Group number currently selected. Displayed only in 2-IOCDS mode.
0	LPAR Group 0.
1	LPAR Group 1.
ACT LPAR	Total number of currently-activated LPARs (nn) in both LPAR Groups (0 and 1). Displayed only in 2-IOCDS mode.
nn	

© COMPAREX Informationssysteme GmbH

7.22 SLPAD Frame

The SLPAD frame displays, and can alter, the contents of registers and storages for a selected logical IP of an ESA-mode LPAR. The frame functions are effective only when the logical IP is in a stopped state. When one frame command is entered before completion of another in progress, their processing order will not be guaranteed. Display and functions of this frame are not available to an LPAR in HCF mode or Dummy mode.

Figure 7-43 illustrates the frame image. Tables 7-48 and 7-49 describe the frame commands, the definition fields, and the display fields.

```
          1         2         3         4         5         6         7         8
12345678901234567890123456789012345678901234567890123456789012345678901234567890
 1 LPAR  1 : LPAR0001  LPAR ALTER/DISPLAY             (SLPAD)  YY/MM/DD HH:MM:SS
 2 SCDS    : A0 / A1   LPAR GROUP : 0                 ACT LPAR :  1 (MAX15)
 3
 4 FACILITIES
 5  G-GENERAL REGISTERS
 6  C-CONTROL REGISTERS
 7  F-FLOATING POINT REGISTERS
 8  P-CURRENT PSW
 9  K-STORAGE KEYS
10  V-STORAGE VIRTUAL(PRI)
11  S-STORAGE VIRTUAL(SEC)
12  M-STORAGE REAL
13  T-PREFIX REGISTER
14  A-GENERAL/ACCESS REGISTER
15  B-STORAGE VIRTUAL(AR)
16  L-STORAGE VIRTUAL(ALET)
17  H-STORAGE VIRTUAL(HOME)
18  R-FPC REGISTER
19  U-PAGE UP    D-PAGE DOWN
20
21  SL-SELECT LOGICAL IP : 1
22
```

Figure 7-43 SLPAD Frame

© COMPAREX Informationssysteme GmbH

Table 7-48 SLPAD Frame—Frame Commands and Definition Field

Display/Input	Function (Sheet 1 of 2)
FACILITIES	Specifies an item to be displayed or altered by the following operation: type a function code, press the Enter key, type a parameter where necessary, and press the Enter key.
G-GENERAL REGISTERS C-CONTROL REGISTERS	Displays/alters the contents of a specified general or control register (0–15). • Parameter: 1-digit register number in hexadecimal. • Display format: 16 bytes in hexadecimal x 4 lines.
F-FLOATING POINT REGISTERS	Displays/alters the contents of a specified floating-point register (0-15). • Parameter: 1-digit register number in hexadecimal. • Display format: 16 bytes in hexadecimal x 2 lines.
P-CURRENT PSW	Displays/alters the contents of the current PSW. • Parameter: None. • Display format: 8 bytes in hexadecimal x 1 line plus function type.
K-STORAGE KEYS	Assuming a specified parameter as a real address, this function displays/alters the storage key of a corresponding page. • Parameter: 8-digit address in hexadecimal. • Display format: 2 bytes in binary x 1 line.
V-STORAGE VIRTUAL (PRI)	Assuming a specified parameter as a primary virtual address, this function displays/alters the contents of a corresponding 64-byte-boundary block of data and the subsequent 64-byte data. • Parameter: 8-digit address in hexadecimal. • Display format: 16 bytes in hexadecimal x 8 lines.
S-STORAGE VIRTUAL (SEC)	Assuming a specified parameter as a secondary virtual address, this function performs the same function as V-STORAGE VIRTUAL (PRI).
M-STORAGE REAL	Assuming a specified parameter as a real address, this function displays/alters the contents of a corresponding 64-byte-boundary block of data and the subsequent 64-byte data. • Parameter: 8-digit address in hexadecimal. • Display format: 16 bytes in hexadecimal x 8 lines.
T-PREFIX REGISTER	Displays/alters the contents of the prefix register (4 bytes). • Parameter: None. • Display format: 4 bytes in hexadecimal x 1 line.
A-GENERAL/ ACCESS REGISTER	Displays/alters the contents of a specified general register or access register (0–15). • Parameter: 1-digit register number in hexadecimal. • Display format: 16 bytes in hexadecimal x 8 lines.
B-STORAGE VIRTUAL (AR)	Assuming the specified parameter as an AR-designated virtual address, this function alters/displays a block of data on a 64-byte boundary containing the address and the subsequent 64-byte data. • Parameters: 1-digit register number in hexadecimal and 8-digit virtual address in hexadecimal. • Display format: 16 bytes in hexadecimal x 8 lines.
L-STORAGE VIRTUAL (ALET)	Assuming the specified parameter as an ALET-designated virtual address, this function alters/displays a block of data on a 64-byte boundary containing the address and the subsequent 64-byte data. • Parameters: 8-digit ALET in hexadecimal and 8-digit virtual address in hexadecimal. • Display format: 16 bytes in hexadecimal x 8 lines.
H-STORAGE VIRTUAL (HOME)	Assuming the specified parameter as a virtual address in the home address space, this function alters/displays a block of data on a 64-byte boundary containing the address and the subsequent 64-byte data. • Parameter: 8-digit virtual address in hexadecimal. • Display format: 16 bytes in hexadecimal x 8 lines.

© COMPAREX Informationssysteme GmbH

Display/Input	Function (Sheet 2 of 2)
R-FPC REGISTER	Displays/alters the contents of the floating-point control register (4 bytes). • Parameter: None. • Display format: 4 bytes in hexadecimal x 1 line.
U-PAGE UP	Causes display of the subsequent data by the following operation: type U and press the Enter key.
D-PAGE DOWN	Causes display of the preceding data by the following operation: type D and press the Enter key.
SL-SELECT LOGICAL IP : n	Specifies a CPU address of a logical IP for alteration/display by the following operation: type SL, press the Enter key, type a CPU address (hexadecimal number), and press the Enter key.

Table 7-49 SLPAD Frame – Display Fields

Display		Meaning
SCDS		SCDS number(s) of active SCDS(s) currently selected. A pair of SCDS numbers are displayed only in 2-IOCDS mode. Otherwise, only one SCDS number is displayed.
LPAR GROUP		LPAR Group number currently selected. Displayed only in 2-IOCDS mode.
	0	LPAR Group 0.
	1	LPAR Group 1.
ACT LPAR		Total number of currently-activated LPARs (nn) in both LPAR Groups (0 and 1). Displayed only in 2-IOCDS mode.
	nn	

© COMPAREX Informationssysteme GmbH

7.23 SLPDEF Frame

The SLPDEF frame defines almost all configuration and control information (with exceptions of MS, ES and channel configurations) for a selected LPAR in an assorted manner, thus eliminating the need to go through the LPRCTL, LPRDEF, LPRIPN, and LPRRSC frames in defining a selected LPAR. Figures 7-44 thru 7-46 illustrate the frame images by processor model. Tables 7-50 and 7-51 describe the frame commands, the definition fields, and the display fields.

Note *on SLPDEF frame images: Each SLPDEF frame image denotes a specific processor model by the number of IPs and the version code shown therein. Conversely, these parameters in each SLPDEF frame image vary with processor configurations.*

```
         1         2         3         4         5         6         7         8
12345678901234567890123456789012345678901234567890123456789012345678901234567890
 1 LPAR  1 : LPAR0001  LPAR DEFINITION EXTENDED       (SLPDEF) YY/MM/DD HH:MM:SS
 2 SCDS    : A0
 3  STATUS : A  PIP : 11  LIP :  4  CH :  64  USG% : 100.0
 4 D-CONFIGURATION DEFINITION
 5    MODE : ESA  A : A    AP :  1
 6       F : N   IP : 0  DEV# : 0640  PARM :           VER : 8A  SER# : 10001
 7 I-IP DEFINITION
 8                    <DEDICATED>  < SHARED  >
 9                    <INI> <RSV>  <INI> <RSV>  PIP ALT
10            SUM ICF = -  +  -  +   -  +  -  +  GRP IP
11   LOGICAL  6        0  2  0  0   3  0  1  0       N
12 R-RESOURCE DEFINITION
13    SRV : 100   TIM :  50
14    MSO :       MSE :  256 MSR :    0 ESO :        ESE :    512 ESR :      0
15 T-CONTROL DEFINITION
16    WC : Y  RC : Y  IO : N  RF : Y  IS : N  PR : N  XL : Y  AD : N  MF : Y
17    TM : Y  TW : N  BR : N  MD : Y  PL : Y  PX : Y
18 F-FUNCTION              Z-LPAR FRAME INDEX (LPRIDX)
19  2-SAVE                 Z+FUNCTION CODE ON LPRIDX
20  3-ACTIVATE/SL           -DIRECT LPAR FRAME CALL
21  4-DEACTIVATE/SL
22
```

```
         1         2         3         4         5         6         7         8
12345678901234567890123456789012345678901234567890123456789012345678901234567890
 1  LPAR  1 : LPAR0001  LPAR DEFINITION EXTENDED       (SLPDEF) YY/MM/DD HH:MM:SS
 2 SCDS    : A0
 3  STATUS : A  PIP : 11  LIP :  4  CH :  64  USG% : 100.0
 4 D-CONFIGURATION DEFINITION
 5    MODE : ESA  A : A    AP :  1
 6       F : N   IP : 0  DEV# : 0640  PARM :           VER : 8A  SER# : 10001
 7 I-IP DEFINITION
 8                    <DEDICATED>  < SHARED  >
 9                    <INI> <RSV>  <INI> <RSV>  VS# ALT
10            SUM ICF = -  +  -  +   -  +  -  +      IP
11   LOGICAL  6        0  2  0  0   3  0  1  0   1   N
12 R-RESOURCE DEFINITION
13    SRV : 100   TIM :  50
14    MSO :       MSE :  256 MSR :    0 ESO :        ESE :    512 ESR :      0
15 T-CONTROL DEFINITION
16    WC : Y  RC : Y  IO : N  RF : Y  IS : N  PR : N  XL : Y  AD : N  MF : Y
17    TM : Y  TW : N  BR : N  MD : Y  PL : Y  PX : Y
18 F-FUNCTION              Z-LPAR FRAME INDEX (LPRIDX)
19  2-SAVE                 Z+FUNCTION CODE ON LPRIDX
20  3-ACTIVATE/SL           -DIRECT LPAR FRAME CALL
21  4-DEACTIVATE/SL
22
```

Figure 7-44 SLPDEF Frame on C2000-xxA and C2000-xxB

Note: *The upper frame image denotes C2000-A2A in non-VSF mode with two ICFs and one IntCF IP. The lower frame image denotes C2000-A2A in VSF mode with two ICFs and one IntCF IP.*

© COMPAREX Informationssysteme GmbH

```
          1         2         3         4         5         6         7         8
12345678901234567890123456789012345678901234567890123456789012345678901234567890
 1 LPAR  1 : HCF1      LPAR DEFINITION EXTENDED       (SLPDEF) YY/MM/DD HH:MM:SS
 2 SCDS    : A0
 3  STATUS : A  PIP : 11  LIP :  4  CH :   8  USG% : 100.0
 4 D-CONFIGURATION DEFINITION
 5    MODE : HCF  A : A    AP :  1
 6       F : N   IP : 0  DEV# : 0000  PARM :           VER : 80  SER# : 10000
 7 I-IP DEFINITION
 8                    <DEDICATED>  < SHARED  >
 9                    <INI> <RSV>  <INI> <RSV>  PIP ALT
10           SUM                                GRP IP
11   LOGICAL  6        5     1      0     0          Y
12 R-RESOURCE DEFINITION
13    SRV : 100   TIM :  50
14    MSO :       MSE :  256 MSR :    0 ESO :        ESE :    512 ESR :      0
15 T-CONTROL DEFINITION
16    WC : Y  RC : Y  IO : N  RF : Y  IS : N  PR : N  XL : Y          MF : Y
17                    BR : N  MD : Y  PL : N  PX : Y
18 F-FUNCTION              Z-LPAR FRAME INDEX (LPRIDX)
19  2-SAVE                 Z+FUNCTION CODE ON LPRIDX
20  3-ACTIVATE/SL           -DIRECT LPAR FRAME CALL
21  4-DEACTIVATE/SL
22
```

Figure 7-45 SLPDEF Frame on CF2000-0xA

© COMPAREX Informationssysteme GmbH

```
          1         2         3         4         5         6         7         8
12345678901234567890123456789012345678901234567890123456789012345678901234567890
 1 LPAR  1 : LPAR0001  LPAR DEFINITION EXTENDED       (SLPDEF) YY/MM/DD HH:MM:SS
 2 SCDS    : A0
 3  STATUS : A  PIP : 13  LIP :  4  CH :  64  USG% : 100.0
 4 D-CONFIGURATION DEFINITION
 5    MODE : ESA  A : A    AP :  1
 6       F : N   IP : 0  DEV# : 0640  PARM :           VER : xx  SER# : 10001
 7 I-IP DEFINITION
 8                    <DEDICATED>  < SHARED  >
 9                    <INI> <RSV>  <INI> <RSV>  PIP ALT
10           SUM                                GRP IP
11   LOGICAL  6        2     0      3     1          N
12 R-RESOURCE DEFINITION
13    SRV : 100   TIM :  50
14    MSO :       MSE :  256 MSR :    0 ESO :        ESE :    512 ESR :      0
15 T-CONTROL DEFINITION
16    WC : Y  RC : Y  IO : N  RF : Y  IS : N  PR : N  XL : Y  AD : N  MF : Y
17    TM : Y  TW : N  BR : N  MD : Y  PL : Y  PX : Y
18 F-FUNCTION              Z-LPAR FRAME INDEX (LPRIDX)
19  2-SAVE                 Z+FUNCTION CODE ON LPRIDX
20  3-ACTIVATE/SL           -DIRECT LPAR FRAME CALL
21  4-DEACTIVATE/SL
22
```

```
          1         2         3         4         5         6         7         8
12345678901234567890123456789012345678901234567890123456789012345678901234567890
 1 LPAR  1 : LPAR0001  LPAR DEFINITION EXTENDED       (SLPDEF) YY/MM/DD HH:MM:SS
 2 SCDS    : A0
 3  STATUS : A  PIP : 13  LIP :  4  CH :  64  USG% : 100.0
 4 D-CONFIGURATION DEFINITION
 5    MODE : ESA  A : A    AP :  1
 6       F : N   IP : 0  DEV# : 0640  PARM :           VER : xx  SER# : 10001
 7 I-IP DEFINITION
 8                    <DEDICATED>  < SHARED  >
 9                    <INI> <RSV>  <INI> <RSV>  VS# ALT
10           SUM                                   IP
11   LOGICAL  6        2     0      3     1      1   N
12 R-RESOURCE DEFINITION
13    SRV : 100   TIM :  50
14    MSO :       MSE :  256 MSR :    0 ESO :        ESE :    512 ESR :      0
15 T-CONTROL DEFINITION
16    WC : Y  RC : Y  IO : N  RF : Y  IS : N  PR : N  XL : Y  AD : N  MF : Y
17    TM : Y  TW : N  BR : N  MD : Y  PL : Y  PX : Y
18 F-FUNCTION              Z-LPAR FRAME INDEX (LPRIDX)
19  2-SAVE                 Z+FUNCTION CODE ON LPRIDX
20  3-ACTIVATE/SL           -DIRECT LPAR FRAME CALL
21  4-DEACTIVATE/SL
22
```

Figure 7-46 SLPDEF Frame on C2000-xxC

Note: *The upper frame image denotes C2000-C2D in non-VSF mode with one IntCF IP. The lower frame image denotes C2000-C2D in VSF mode with one IntCF IP. Version codes for C2000-xxC Models are not determined yet.*

© COMPAREX Informationssysteme GmbH

Table 7-50 SLPDEF Frame—Frame Commands and Definition Fields

Display/Input	**Function** **(Sheet 1 of 3)**
D-CONFIGURATION DEFINITION	Enables key input to the configuration definition fields by the following operation: type D and press the Enter key. Although limited to the currently-selected LPAR, the defining actions with this command serve as comparable functions on the LPRDEF frame.
MODE	Defines CPU mode for the currently-selected LPAR.
ESA	ESA/390 mode. Not available on the CF2000 models.
HCF	HCCF-LPAR. Available only when the HCCF is installed.
DMY	Dummy mode. Not effective to an activated LPAR or the CF2000-0xA Models.
A	Defines mode for activation of the currently-selected LPAR.
A	Auto Activate mode.
M	Manual Activate mode.
AP	Specifies the order of automatic activation in decimal numbers 1 thru 99. A smaller number gives a higher priority. If the same number is specified to multiple LPARs, an LPAR with a smaller LPAR number or group number has a higher priority.
F	Defines Auto IPL or manual IPL for each LPAR.
Y	Auto IPL. Has no effect on an LPAR in HCF mode or Dummy mode (treated as "N").
N	Manual IPL.
IP	Defines CPU address for the logical IP of the currently-selected LPAR when auto IPL is specified. With no input in this field, the system assumes the smallest available CPU address. Has no effect on an LPAR in HCF mode or Dummy mode.
DEV#	Defines device number for the currently-selected LPAR when auto IPL is specified. Has no effect on an LPAR in HCF mode or Dummy mode.
PARM	Defines load parameter for the currently-selected LPAR when auto IPL is specified. Has no effect on an LPAR in HCF mode or Dummy mode.
VER	Version code of the currently-selected LPAR. Has no effect on an LPAR in HCF mode or Dummy mode. In VSF mode, alteration of version code is disabled and a possible version code "00" means that the Virtual Server assigned to the currently-selected LPAR is disabled.
SER#	Serial number of the currently-selected LPAR. Has no effect on an LPAR in HCF mode or Dummy mode.
I-IP DEFINITION	Enables key input to the logical IP definition fields by the following operation: type I and press the Enter key. Although limited to the currently-selected LPAR, the defining actions with this command serve as comparable functions on the LPRIPN frame.
(Logical IP count by mode)	Defines the numbers of logical IPs (LIPs) for the currently-selected LPAR within the range of 0 to F. Effective only when the LPAR is in deactivated status. • <DEDICATED> and <SHARED>: Dedicated mode and shared mode. • <INI> and <RSV>: Initial mode and reserved mode. A logical IP in initial mode is installed to an LPAR and onlined at activation. A logical IP in reserved mode is installed to an LPAR at activation, but not onlined. • ICF = - and +: "-" (ICF unavailable) or "+" (ICF available). Not displayed when ICF is not installed on the system (hence not applicable to CF2000-0xA or C2000-xxC).
PIP GRP or VS#	In non-VSF mode, defines the physical IP scheduling group to the currently-selected LPAR within the range of 1 to F or space (undefined). Effective only when the LPAR is in activated status. In VSF mode, defines the Virtual Server number to the currently-selected LPAR within the range of 1 to F. Not effective when the LPAR is in activated status.
ALT IP	Defines the availability of Alternate Processors (APs) to be assigned to LIPs in dedicated mode prior to IPs. Displayed only when IntCF is supported. Effective only on an LPAR in HCF mode.
Y	Allows the assignment of APs prior to IPs.
N	Inhibits the assignment of APs.
R-RESOURCE DEFINITION	Enables key input to the resource definition fields by the following operation: type R and press the Enter key. Although limited to the currently-selected LPAR, the defining actions with this command serve as comparable functions on the LPRRSC frame.

© COMPAREX Informationssysteme GmbH

Display/Input	Function (Sheet 2 of 3)
SRV	Defines service ratio (relative value) in three digits.
TIM	Defines time-slice value for the shared-mode IP resource in the currently-selected LPAR within the range of 1 ms to 100 ms (absolute value). Not applicable to the dedicated-mode IP resource, to which the system-defined fixed value of 500 ms applies.
MSO*	Defines MS origin in MB in five digits on the boundary of model-dependent unit size (in Real MS Capacity Expansion mode) or 1 MB (otherwise).
MSE*	Defines MS extent (physical capacity limit) in MB in four digits on the boundary of model-dependent unit size (in Real MS Capacity Expansion mode) or 1 MB (otherwise).
MSR*	Defines Reserved MS size in MB in four digits on the boundary of model-dependent unit size (in Real MS Capacity Expansion mode) or 1 MB (otherwise).
ESO*	Defines ES origin in MB in six digits on the boundary of model-dependent unit size (in Real MS Capacity Expansion mode) or 1 MB (otherwise).
ESE*	Defines ES extent (physical capacity limit) in MB in six digits on the boundary of model-dependent unit size (in Real MS Capacity Expansion mode) or 1 MB (otherwise).
ESR*	Defines Reserved ES size in MB in six digits on the boundary of model-dependent unit size (in Real MS Capacity Expansion mode) or 1 MB (otherwise).
T-CONTROL DEFINITION	Enables key input to the control definition fields by the following operation: type T and press the Enter key. Although limited to the currently-selected LPAR, the defining actions with this command serve as comparable functions on the LPRCTL frame.
WC*	Defines Wait Completion function.
Y	Enables Wait Completion.
N	Disables Wait Completion.
RC	Defines resource capping.
Y	Enables the resource capping of the LPAR.
N	Disables the resource capping of the LPAR.
IO*	Defines SCDS Access Enable control and DRM control.
Y	Enables write/read-access to the SCDS, and enables DRM.
N	Disables write/read-access to the SCDS, and disables DRM.
RF	Defines RMF (Resource Measurement Facility) control.
Y	Causes data of all LPARs to be collected.
N	Causes data of this only LPAR to be collected.
IS†	Defines Isolate control to cause a channel path to be connected to or disconnected from the currently-selected LPAR for reconfiguration.
Y	Inhibits a channel path reconfiguration.
N	Allows a channel path reconfiguration.
PR	Defines protection control (protected or not protected).
Y	Inhibits all operations through frames or by commands.
N	Allows operations through frames or by commands.
XL*†	Defines Dynamic LPAR Reconfiguration control.
Y	Enables Dynamic LPAR Reconfiguration function.
N	Disables Dynamic LPAR Reconfiguration function.
AD*†‡	Defines ADMF (Asynchronous Data Mover Facility) control.
Y	Enables ADMF.
N	Disables ADMF.
MF*	Defines ICMF control.
Y	Enables ICMF.
N	Disables ICMF.
TM*†‡	Defines setting of Time Machine Facility.
Y	Enables Time Machine Facility.
N	Disables Time Machine Facility.

© COMPAREX Informationssysteme GmbH

Display/Input	Function (Sheet 3 of 3)
TW*†‡	Defines setting of Time Warp Facility.
Y	Enables Time Warp Facility.
N	Disables Time Warp Facility.
BR*†	Defines setting of the Alarm Bell function to the target LPAR. This function, if enabled, causes the SVP alarm buzzer to beep when the guest OS loads a disabled wait PSW.
Y	Enables Alarm Bell to the selected LPAR.
N	Disables Alarm Bell to the selected LPAR.
MD*†	Defines how the OS in the target LPAR is to obtain the MDC and MPFACTOR information.
Y	Enables the guest OS to obtain the MDC and MPFACTOR information from the SCP INFO Block of the MLPF Hypervisor.
N	Returns zero for this MD field, allowing the guest OS to obtain the MDC and MPFACTOR information from the OS's own software tables.
PL*†	Defines Policy Diagnose control for MLPF Policy.
Y	Allows writing of MLPF Policy with Policy Diagnose instructions.
N	Inhibits writing of MLPF Policy with Policy Diagnose instructions.
PX	Defines PMC command control for MLPF Policy.
Y	Allows editing of PMC commands.
N	Inhibits editing of PMC commands.
F-FUNCTION	Executes the subfunctions 2 thru 4 by the following operation: type F and a subfunction number, and press the Enter key.
2-SAVE	Stores the entire definition information of all LPARs. Regardless of system's power-off, the stored information remains unchanged until next execution of this subfunction, its counterpart on the LPRDEF frame, or the SAVE command.
3-ACTIVATE/SL	Activates the currently-selected LPAR.
4-DEACTIVATE/SL	Deactivates the specified LPAR.

* Not effective on an LPAR in Dummy mode.
† Not applicable on an LPAR in HCF mode.
‡ Not applicable CF200-0xA Models.

Table 7-51 SLPDEF Frame—Display Fields

Display	Meaning
SCDS	SCDS number(s) of active SCDS(s) currently selected. A pair of SCDS numbers are displayed only in 2-IOCDS mode. Otherwise, only one SCDS number is displayed.
LPAR GROUP	LPAR Group number currently selected. Displayed only in 2-IOCDS mode.
0	LPAR Group 0.
1	LPAR Group 1.
ACT LPAR	Total number of currently-activated LPARs (nn) in both LPAR Groups (0 and 1). Displayed only in 2-IOCDS mode.
nn	
STATUS	Status of the currently-selected LPAR in one-character codes: "A" (activated), "D" (deactivated), "P" (activation pending), and "C" (check-stopped).
PIP	Number of total physical IPs.
LIP	Number of logical IPs allocated to the currently-selected LPAR.
CH	Number of channel paths allocated to the currently-selected LPAR.
USG% nnn.n	Resource usage ratio (percentage).

© COMPAREX Informationssysteme GmbH

7.24 SLPDEV Frame

The SLPDEV frame displays information of specified subchannels for an ESA-mode LPAR. To call display of another LPAR, specify the desired LPAR number by entering the SELECT command (chapter 8). Display and functions of this frame are not available to an LPAR in HCF mode or Dummy mode.

Figure 7-47 illustrates the frame image. Tables 7-52 and 7-53 describe the frame commands, the definition fields, and the display fields.

```
          1         2         3         4         5         6         7         8
12345678901234567890123456789012345678901234567890123456789012345678901234567890
1  LPAR  1 : LPAR0001  LPAR IO DEVICE                 (SLPDEV) YY/MM/DD HH:MM:SS
2  SCDS    : A0 / A1   LPAR GROUP : 0                ACT LPAR :  1 (MAX15)
3   <PHYSICAL>                                                   CPU MODE = ESA
4   DEV# SCH#              UA     CH *  CH *  CH *  CH *  CH *  CH *  CH *  CH *
5   0140 0003              04     00 +  10 -
6   0150 0004              50     00 +  10 -
7   0340 0010              0B     01 +  11 -
8   0410 0020              10     01 +  11 -
9   0411 0021              11     01 +  11 -
10  0412 0022              12     08 +  18 +
11  0413 0023              13     08 +  18 +
12  0480 0030              80     08 +  18 +
13  0490 0070              90     09 +  19 +
14  0491 0071              91     09 +  19 +
15
16
17
18
19
20
21   INPUT PHYSICAL DEV# : 0410     F-DEFINE / U-PAGE UP / D-PAGE DOWN
22
```

Figure 7-47 SLPDEV Frame

© COMPAREX Informationssysteme GmbH

Table 7-52 SLPDEV Frame—Frame Commands and Definition Fields

Display/Input	Function
F-DEFINE	Enables key input to the INPUT PHYSICAL DEV# field by the following operation: type F and press the Enter key.
U-PAGE UP	Causes display of subsequent subchannel information by the following operation: type U and press the Enter key.
D-PAGE DOWN	Causes display of preceding subchannel information by the following operation: type D and press the Enter key.
INPUT PHYSICAL DEV# : nnnn	Causes display of subchannel information subsequent to a specified device number by the following operation: type a device number and press the Enter key.

Table 7-53 SLPDEV Frame—Display Fields

Display	Meaning
SCDS	SCDS number(s) of active SCDS(s) currently selected. A pair of SCDS numbers are displayed only in 2-IOCDS mode. Otherwise, only one SCDS number is displayed.
LPAR GROUP	LPAR Group number currently selected. Displayed only in 2-IOCDS mode.
0	LPAR Group 0.
1	LPAR Group 1.
ACT LPAR	Total number of currently-activated LPARs (nn) in both LPAR Groups (0 and 1). Displayed only in 2-IOCDS mode.
nn	
CPU MODE = ESA	CPU mode of currently-selected LPAR being ESA (ESA/390).
(Subchannel information)	Subchannel information.
<PHYSICAL> DEV#	Physical device number for each subchannel in four digits.
<PHYSICAL> SCH#	Subchannel number for each subchannel in four digits.
UA	Unit address of each subchannel in two digits.
CH	Channel path ID for each subchannel (PIM bit = on) in two digits.
*	Status of each channel path shown by “+” (online) and “-” (offline).

© COMPAREX Informationssysteme GmbH

7.25 SLPMSG Frame

The SLPMSG frame provides a means of communicating with OS messages on a selected OS-LPAR under console integration, and a means of operating a selected HCCF-LPAR. To call display of another LPAR on this frame, specify the desired LPAR number by the SELECT command (chapter 8). Display and functions of this frame are not available to an LPAR in Dummy mode.

Figure 7-48 illustrates the frame image. Tables 7-54 and 7-55 describe the definition fields and the display fields.

```
          1         2         3         4         5         6         7         8
12345678901234567890123456789012345678901234567890123456789012345678901234567890
1  LPAR  1 : LPAR0001  LPAR OPERATOR MESSAGE          (SLPMSG) YY/MM/DD HH:MM:SS
2   SCDS     : A0 / A1   LPAR GROUP : 0                ACT LPAR :  1 (MAX15)
3                      - LOW  PRIORITY SCREEN -
4   PERIOD(SEC): 10   OFF   LINE:   5  PGUP KEY: HIGH PRIORITY  LPS: NONE
5     HH:MM:SS XXXXXXXXXXXXXXXXXXXXXXXXXXXXXXXXXXXXXXXXXXXXXXXXXXXXXXXXXXXXXXXXXXX
6      XXXXXXXXXXXXXXXXXXXXXXXXXXXXXXXXXXXXXXXXXXXXXXXXXXXXXXXXXXXXXXXXXXXXXXXXXX
7   H HH:MM:SS XXXXXXXXXXXXXXXXXXXXXXXXXXXXXXXXXXXXXXXXXXXXXXXXXXXXXXXXXXXXXXXXX
8
9
10
11
12
13
14
15
16
17
18
19  **** TO RESTART AUTO-REFRESH, ENTER AN SCP COMMAND OR PRESS CANCEL KEY. ****
20  SCP COMMAND =>
21
22
```

Figure 7-48 SLPMSG Frame

Table 7-54 SLPMSG Frame—Definition Fields

Display/Input		Function
PERIOD(SEC): nn ON or OFF		When ON is displayed, entering a parameter in this field specifies auto refreshing mode and interval (1 thru 30 seconds; 5 seconds by default), or manual refreshing mode (0 second) in which the frame display can be refreshed with each pressing of the Esc key. To enable this field for parameter input (from OFF to ON), press the Enter or Esc key; to disable this field for parameter input (from ON to OFF), press the Page Down key. When ON is displayed, input to the other definition fields is not available; when OFF is displayed, input to the other definition fields is available.
LINES nn		While OFF is displayed in the PERIOD(SEC) field, specifies the scroll line count for the message display between 1 and 14 (5 lines by default).
H or space (field preceding each message)		Indicates the message status and, by overwriting the character H with the character D, deletes the message.
	H	Indicates Hold status. Such a message will not be deleted until D is entered in this field while OFF is displayed in the PERIOD(SEC) field.
	Space	Indicates not Hold status. Such messages will be automatically deleted one after another when received messages exceed the scroll line count.
SCP COMMAND => x … x		While OFF is displayed in the PERIOD(SEC) field, serves as an input field for an SCP (system control program) command and an HCCF operator command.

© COMPAREX Informationssysteme GmbH

Table 7-55 SLPMSG Frame—Display Fields

Display	Meaning
SCDS	SCDS number(s) of active SCDS(s) currently selected. A pair of SCDS numbers are displayed only in 2-IOCDS mode. Otherwise, only one SCDS number is displayed.
LPAR GROUP	LPAR Group number currently selected. Displayed only in 2-IOCDS mode.
0	LPAR Group 0.
1	LPAR Group 1.
ACT LPAR	Total number of currently-activated LPARs (nn) in both LPAR Groups (0 and 1). Displayed only in 2-IOCDS mode.
nn	
PGUP KEY	Display mode (high priority screen or low priority screen) at next pressing of the Page Up key.
HIGH	High priority screen (including at least one high priority message).
LOW	Low priority screen (not including any high priority message).
HIGH/LOW PRIORITY SCREEN	Current display mode (high priority screen or low priority screen).
HIGH	High priority screen (including at least one high priority message).
LOW	Low priority screen (not including any high priority message).
LPS	Presence/absence and priority class of messages received by the other (not currently displayed) LPARs.
HIGH PRIORITY	Status in which at least one high priority message is received.
LOW PRIORITY	Status in which only low priority messages are received.
NONE	Status in which no message is received.
TO RESTART … KEY.	Guidance while OFF is displayed in the PERIOD(SEC) field. While ON is displayed in the same field, the following sentence is displayed instead: “TO ENTER AN SCP COMMAND, PRESS PAGE DOWN KEY TO PAUSE AUTO-REFRESH.”

© COMPAREX Informationssysteme GmbH

7.26 SLPOP Frame

The SLPOP frame executes operator control functions such as system initialization, IPL and restart for a specified ESA-mode LPAR. In some cases, the operator must specify a logical IP number in advance, using the “SL-SEL. LOGICAL IP” function. When one frame command is entered before completion of another in progress, their processing order will not be guaranteed. Display and functions of this frame are not available to an LPAR in HCF mode or Dummy mode.

Figures 7-49 and 7-50 illustrate the frame images by processor model. Tables 7-56 and 7-57 describe the frame commands, the definition fields, and the display fields.

```
         1         2         3         4         5         6         7         8
12345678901234567890123456789012345678901234567890123456789012345678901234567890
 1 LPAR  1 : LPAR0001  LPAR OPERATOR CONTROL          (SLPOP)  YY/MM/DD HH:MM:SS
 2 SCDS    : A0
 3 O-OPERATOR FUNCTION         R-RATE CONTROL/S            T-START LOGICAL IP/S
 4  2-RESTART/S                >1-PROCESS                    (TA-ALL)
 5  3-SYSTEM RESET/S            2-INSTRUCTION STEP         H-STOP LOGICAL IP/S
 6  4-LOAD/S                                                 (HA-ALL)
 7  5-STORE STATUS/S                                       SL-SEL. LOGICAL IP:
 8  6-SYSTEM RESET (CLEAR)                                   0-IP0   8-IP8
 9  7-LOAD (CLEAR)/S                                         1-IP1   9-IP9
10  8-LPAR INITIALIZE                                        2-IP2   A-IPA
11  9-LOAD (REWIND)/S          I-SET IC/S                    3-IP3
12                               XXXXXXXX                    4-IP4
13                                                           5-IP5
14 L-LOAD                                                    6-IP6
15  1-UNIT NO./S 0640                                        7-IP7
16  2-PARM. ( 102      )
17
18
19
20
21
22
```

Figure 7-49 SLPOP Frame on C2000-xxA and C2000-xxB

```
         1         2         3         4         5         6         7         8
12345678901234567890123456789012345678901234567890123456789012345678901234567890
 1 LPAR  1 : LPAR0001  LPAR OPERATOR CONTROL          (SLPOP)  YY/MM/DD HH:MM:SS
 2 SCDS    : A0
 3 O-OPERATOR FUNCTION         R-RATE CONTROL/S            T-START LOGICAL IP/S
 4  2-RESTART/S                >1-PROCESS                    (TA-ALL)
 5  3-SYSTEM RESET/S            2-INSTRUCTION STEP         H-STOP LOGICAL IP/S
 6  4-LOAD/S                                                 (HA-ALL)
 7  5-STORE STATUS/S                                       SL-SEL. LOGICAL IP:
 8  6-SYSTEM RESET (CLEAR)                                   0-IP0   8-IP8
 9  7-LOAD (CLEAR)/S                                         1-IP1   9-IP9
10  8-LPAR INITIALIZE                                        2-IP2   A-IPA
11  9-LOAD (REWIND)/S          I-SET IC/S                    3-IP3   B-IPB
12                               XXXXXXXX                    4-IP4   C-IPC
13                                                           5-IP5
14 L-LOAD                                                    6-IP6
15  1-UNIT NO./S 0640                                        7-IP7
16  2-PARM. ( 102      )
17
18
19
20
21
22
```

Figure 7-50 SLPOP Frame on C2000-xxC

© COMPAREX Informationssysteme GmbH

Table 7-56 SLPOP Frame—Frame Commands and Definition Fields

Display/Input	Function
O-OPERATOR FUNCTION	Executes the subfunctions 2 to 9 by the following operation: type O and a subfunction number, and press the Enter key.
2-RESTART/S	Causes a restart interruption (stores the old PSW into address 8 in main storage and resumes operation using the new PSW in address 0).
3-SYSTEM RESET/S	Causes system reset.
4-LOAD/S	Executes an IPL (initial program loading) from the device specified by L-LOAD.
5-STORE STATUS/S	Starts a store status operation.
6-SYSTEM RESET (CLEAR)	Causes system clear reset.
7-LOAD (CLEAR)/S	Executes an IPL from the device specified by L-LOAD upon completion of system clear reset.
8-LPAR INITIALIZE	Starts initialization sequence (causes the same action as the LPAR activation).
9-LOAD(REWIND)/S	Issues a rewind command for the magnetic tape device specified by L-LOAD and then starts IPL.
L-LOAD	Specifies a unit number for a loading device for IPL.
1-UNIT NO./S nnnn	Type L1, press the Enter key, type a device number, and press the Enter key.
2-PARM. (nnnnnnnn)	Type L2 and press the Enter key; then, type a load parameter and press the Enter key.
R-RATE CONTROL/S	Specifies or resets the instruction step mode.
1-PROCESS	Resets the instruction step mode by the following operation: type R1 and press the Enter key. Then, specifying of T-START LOGICAL IP/S will start normal processing.
2-INSTRUCTION STEP	Specifies the instruction step mode by the following operation: type R2 and press the Enter key. Then, each specifying of T-START LOGICAL IP/S will execute only one instruction and cause the system to enter the stopped state.
I-SET IC/S nnnnnnnn	Specifies a start address to start program execution by the following operation: type I, press the Enter key, type an 8-digit address, and press the Enter key. Then, specifying of T-START LOGICAL IP/S will start the program execution.
T-START LOGICAL IP/S (TA-ALL)	Starts a specified logical IP by the following operation: type T and press the Enter key. To start all logical IPs at a time, type TA and press the Enter key.
H-STOP LOGICAL IP/S (HA-ALL)	Stops a specified logical IP by the following operation: type H and press the Enter key. To stop all logical IPs at a time, type HA and press the Enter key.
SL-SEL LOGICAL IP: n	Specifies the CPU address of a logical IP to be selected for execution of a frame command suffixed with "/S." Type SL, press the Enter key, type a CPU address, and press the Enter key.

Table 7-57 SLPOP Frame—Display Fields

Display	Meaning
SCDS	SCDS number(s) of active SCDS(s) currently selected. A pair of SCDS numbers are displayed only in 2-IOCDS mode. Otherwise, only one SCDS number is displayed.
LPAR GROUP	LPAR Group number currently selected. Displayed only in 2-IOCDS mode.
0	LPAR Group 0.
1	LPAR Group 1.
ACT LPAR	Total number of currently-activated LPARs (nn) in both LPAR Groups (0 and 1). Displayed only in 2-IOCDS mode.
nn	

© COMPAREX Informationssysteme GmbH

7.27 SLPOPC Frame

The SLPOPC frame provides for installing/deinstalling online patches for Highspeed Coupling Control Feature Assist (HCCFA). Figure 7-51 illustrates the frame image. Tables 7-58 and 7-59 describe the frame commands, the definition fields, and the display fields.

During any command execution on the SLPOPC frame, further command execution on any other frame will be held pending.

```
          1         2         3         4         5         6         7         8
12345678901234567890123456789012345678901234567890123456789012345678901234567890
1  LPAR  1 : LPAR0001  LPAR HCCF ONLINE PATCH CONTROL (SLPOPC) YY/MM/DD HH:MM:SS
2   SCDS     : A0 / A1   LPAR GROUP : 0                 ACT LPAR :  1 (MAX15)
3   SELECT-S1,S2,S3    UNIT(S1) ST(S2)          ECN(S3)
4                      00-00-01
5   CURRENT REV        --------------------PATCH STATUS--------------------------
6   (00-00-01)         UNIT REV STATUS COMPDATE ECN NO. TITLE
7                      00-00-01 A-COMP 96/10/01 222-001 HCCFA MSG FAIL
8   LAST UNIT REV#     00-00-02 COMP   96/10/05 222-002 HANG UP AT HCCFA IPL
9   (00-00-0F)         00-00-03 D-COMP 96/10/05 222-003 ABEND 456 IN HCCFA
10                     00-00-04 N-SYS           222-004 R=15 FAILURE HCCFA ABEND
11  U-PAGE UP          00-00-05 OLD-NG          222-005 INCORRECT CC
12  D-PAGE DOWN        00-00-06 DISBL           222-006 WRITE EVENT DATA NG
13                     00-00-07 AWAIT           222-007 READ EVENT FAIL
14  E-EXECUTE          00-00-08 N-SYS           222-008 UNEXPECTED PGMINT
15                     00-00-09 OLD-NG          222-009 ABEND 567 IN HCCFA
16  F-FUNCTION         00-00-0A DISBL           222-010 Z5555HCF DETECTED ERROR
17   5-READ FILE       00-00-0B AWAIT           222-011 HCCFA HUNG UP 456PG
18   6-INSTALL         00-00-0C N-SYS           222-012 DUMP IPL ERROR
19   7-INSTALL-F       00-00-0D OLD-NG          222-013 COMMAND LOG DATA NG
20   8-DEINSTALL-P     00-00-0E DISBL           222-014 TITLE DATA NG
21   9-DEINSTALL-A     00-00-0F AWAIT           222-015 COMMAND INPUT DATA LNG NG
22
```

Figure 7-51 SLPOPC Frame

Table 7-58 SLPOPC Frame—Frame Commands and Definition Fields

Display/Input	Function (Sheet 1 of 2)
SELECT-S1,S2,S3	Selects the patch file display mode by the following operation: type S1, S2 or S3, press the Enter key, type a parameter in the relevant field UNIT(S1), ST(S2) or ECN(S3), and press the Enter key. • S1: Status listing of patch files in the ascending order of the unit revision, starting from the one specified in the UNIT(S1) field. • S2: Status listing of patch files, the status parameter of which is specified in the ST(S2) field, in the ascending order of the unit revision. • S3: Status listing of patch files in the ascending order of the ECN number, starting from the one specified in the ECN(S3) field.
U-PAGE UP	Causes display of the subsequent status listing of patch files by the following operation: type U and press the Enter key.
D-PAGE DOWN	Causes display of the preceding status listing of patch files by the following operation: type D and press the Enter key.
E-EXECUTE	Executes the function specified with the F command by the following operation: type E and press the Enter key.

© COMPAREX Informationssysteme GmbH

Display/Input	Function (Sheet 2 of 2)
F-FUNCTION	Specifies the subfunctions 5 thru 9 by the following operation: type F and a subfunction number, and press the Enter key.
5-READ FILE	Reads and verifies the patch file contents from the Verified Patch Data file.
6-INSTALL	Reads and verifies the patch file contents from the Verified Patch Data file, and, if successful with all the patch files, installs the patches into HCCFA.
7-INSTALL-F	Reads and verifies the patch file contents from the Verified Patch Data file, and, if successful with all or part of the patch files, installs the successfully verified patches into HCCFA.
8-DEINSTALL-P	Deinstalls the patches last-installed by the F6 or F7 subfunction. Once this F8 subfunction is executed, further execution of this subfunction results in no operation until next execution of the F6 or F7 subfunction.
9-DEINSTALL-A	Deinstalls all the patches installed by the F6 and F7 subfunctions. Once this F9 subfunction is executed, further execution of this subfunction results in no operation until next execution of the F6 or F7 subfunction.
UNIT(S1)	Specifies the starting unit revision for the patch file display mode of S1.
ST(S2)	Specifies the status parameter for the patch file display mode of S2.
AWAIT	Awaiting for installation.
A-COMP	Automatically installed upon SYSTEM INITIALIZE on the OPRCTL frame.
COMP	Installed with the F6 or F7 subfunction.
DISBL	Disabled (prohibited) against installation.
D-CMP	Once installed and now deinstalled.
N-SYS	Needing SYSIML for installation.
OLD-NG	Installation suppressed because of incorrect old pattern.
ECN(S3)	Specifies the starting ECN number for the patch file display mode of S3.

Table 7-59 SLPOPC Frame—Display Fields

Display	Meaning
SCDS	SCDS number(s) of active SCDS(s) currently selected. A pair of SCDS numbers are displayed only in 2-IOCDS mode. Otherwise, only one SCDS number is displayed.
LPAR GROUP	LPAR Group number currently selected. Displayed only in 2-IOCDS mode.
0	LPAR Group 0.
1	LPAR Group 1.
ACT LPAR	Total number of currently-activated LPARs (nn) in both LPAR Groups (0 and 1). Displayed only in 2-IOCDS mode.
nn	
CURRENT REV (nn-nn-nn)	Unit revision of the last-installed patch file.
LAST UNIT REV# (nn-nn-nn)	Unit revision of the last-read patch file.
PATCH STATUS	Status listing of patch files.
UNIT REV	Unit revision.
STATUS	Status (same as defined in the ST(S2) field).
COMPDATE	Date when the status is determined.
ECN NO	ECN number.
TITLE	ECN title.

© COMPAREX Informationssysteme GmbH

7.28 SLPSTS Frame

The SLPSTS frame displays the logical IP status and PSW on a specified LPAR. Figures 7-52 and 7-53 illustrate the frame images by processor model. Table 7-60 describes the display fields. Display of this frame is not available to an LPAR in Dummy mode.

```
          1         2         3         4         5         6         7         8
12345678901234567890123456789012345678901234567890123456789012345678901234567890
 1  LPAR  1 : LPAR0001  LPAR STATUS DISPLAY            (SLPSTS) YY/MM/DD HH:MM:SS
 2  SCDS    : A0
 3
 4   LOGICAL IP STATUS / PSW
 5     IP0 : STOP         00000000 00000000
 6     IP1 : STOP         00000000 00000000
 7     IP2 : OFFLINE
 8     IP3 : CHECK STOP   04080000 80001000
 9     IP4 : RUNNING      04080000 80080000
10     IP5 : D-WAIT       000A0000 00000EEE
11     IP6 : E-WAIT       070E0000 00000000
12     IP7 : RUNNING      04080000 80080000
13     IP8 : E-WAIT       070E0000 00000000
14     IP9 : RUNNING      04080000 80100000
15     IPA : OFFLINE
16
 :
22
```

Figure 7-52 SLPSTS Frame on C2000-xxA, C2000-xxB, or CF2000-0xA

```
          1         2         3         4         5         6         7         8
12345678901234567890123456789012345678901234567890123456789012345678901234567890
 1  LPAR  1 : LPAR0001  LPAR STATUS DISPLAY            (SLPSTS) YY/MM/DD HH:MM:SS
 2  SCDS    : A0
 3
 4   LOGICAL IP STATUS / PSW
 5     IP0 : STOP         00000000 00000000
 6     IP1 : STOP         00000000 00000000
 7     IP2 : OFFLINE
 8     IP3 : CHECK STOP   04080000 80001000
 9     IP4 : RUNNING      04080000 80080000
10     IP5 : D-WAIT       000A0000 00000EEE
11     IP6 : E-WAIT       070E0000 00000000
12     IP7 : RUNNING      04080000 80080000
13     IP8 : E-WAIT       070E0000 00000000
14     IP9 : RUNNING      04080000 80100000
15     IPA : OFFLINE
16     IPB : RUNNING      04080000 80080000
 :     IPC : RUNNING      04080000 80080000
22
```

Figure 7-53 SLPSTS Frame on C2000-xxC

© COMPAREX Informationssysteme GmbH

Table 7-60 SLPSTS Frame—Display Fields

Display		Meaning
SCDS		SCDS number(s) of active SCDS(s) currently selected. A pair of SCDS numbers are displayed only in 2-IOCDS mode. Otherwise, only one SCDS number is displayed.
LPAR GROUP		LPAR Group number currently selected. Displayed only in 2-IOCDS mode.
	0	LPAR Group 0.
	1	LPAR Group 1.
ACT LPAR		Total number of currently-activated LPARs (nn) in both LPAR Groups (0 and 1). Displayed only in 2-IOCDS mode.
	nn	
IPn		Logical IP number: 0-A on C2000-xxA, and 0-C on C2000-xxC.
LOGICAL IP STATUS		Logical IP status.
	OFFLINE	Offline status.
	CHECK STOP	Check-stopped state.
	RUNNING	Running state.
	D-WAIT	Disabled wait.
	E-WAIT	Enabled wait.
	STOP	Stopped state.
	CMP-STOP	Compare-stopped state.
	RAT-STOP	Rate-stopped state.
PSW		PSW of logical IP in online status.

© COMPAREX Informationssysteme GmbH

7.29 SLPSY Frame

The SLPSY frame executes system control functions such as load parameter setting, system control program initialization, standalone dump initiation and PSW restart for a specified ESA-mode LPAR. When one frame command is entered before completion of another in progress, their processing order will not be guaranteed. Display and functions of this frame are not available to an LPAR in HCF mode or Dummy mode.

Figures 7-54 and 7-55 illustrate the frame images by processor model. Tables 7-61 and 7-62 describe the frame commands, the definition fields, and the display fields.

```
          1         2         3         4         5         6         7         8
12345678901234567890123456789012345678901234567890123456789012345678901234567890
1  LPAR  1 : LPAR0001  LPAR SYSTEM CONTROL            (SLPSY)  YY/MM/DD HH:MM:SS
2  SCDS    : A0
3  M-MODIFY LOAD PARAMETER (      102 )         T-START LOGICAL IP/S
4                                                  (TA-ALL)
5                                                H-STOP LOGICAL IP/S
6  C-INITIALIZE SYSTEM CONTROL PROGRAM/S           (HA-ALL)
7      LOAD UNIT  0640                           SL-SEL. LOGICAL IP:
8                                                  0-IP0  4-IP4  8-IP8
9                                                  1-IP1  5-IP5  9-IP9
10 D-INITIATE STANDALONE DUMP/S                    2-IP2  6-IP6  A-IPA
11     AUTO STORE STATUS IS ( OFF )                3-IP3  7-IP7
12     LOAD UNIT  0641
13                                              (RESTART REASONS)
14                             ( 0 - ABEND CURRENT PROGRAM                  )
15 P-PSW RESTART/S             ( 1 - PERFORM MVS SYSTEM DIAGNOSTICS         )
16     (REASON : 0 )           (                                            )
17                             (                                            )
18 E-EXECUTE                   (                                            )
19                             (                                            )
20                             (                                            )
21                             (                                            )
22                             (                                            )
```

Figure 7-54 SLPSY Frame on C2000-xxA and C2000-xxB

```
          1         2         3         4         5         6         7         8
12345678901234567890123456789012345678901234567890123456789012345678901234567890
1  LPAR  1 : LPAR0001  LPAR SYSTEM CONTROL            (SLPSY)  YY/MM/DD HH:MM:SS
2  SCDS    : A0
3  M-MODIFY LOAD PARAMETER (      102 )         T-START LOGICAL IP/S
4                                                  (TA-ALL)
5                                                H-STOP LOGICAL IP/S
6  C-INITIALIZE SYSTEM CONTROL PROGRAM/S           (HA-ALL)
7      LOAD UNIT  0640                           SL-SEL. LOGICAL IP:
8                                                  0-IP0  4-IP4  8-IP8  C-IPC
9                                                  1-IP1  5-IP5  9-IP9
10 D-INITIATE STANDALONE DUMP/S                    2-IP2  6-IP6  A-IPA
11     AUTO STORE STATUS IS ( OFF )                3-IP3  7-IP7  B-IPB
12     LOAD UNIT  0641
13                                              (RESTART REASONS)
14                             ( 0 - ABEND CURRENT PROGRAM                  )
15 P-PSW RESTART/S             ( 1 - PERFORM MVS SYSTEM DIAGNOSTICS         )
16     (REASON : 0 )           (                                            )
17                             (                                            )
18 E-EXECUTE                   (                                            )
19                             (                                            )
20                             (                                            )
21                             (                                            )
22                             (                                            )
```

Figure 7-55 SLPSY Frame on C2000-xxC

© COMPAREX Informationssysteme GmbH

Table 7-61 SLPSY Frame—Frame Commands and Definition Fields

Display/Input	Function
M-MODIFY LOAD PARAMETER (nnnnnnnn)	Specifies a load parameter for IPL by the following operation: type M, press the Enter key, type a load parameter, and press the Enter key.
C-INITIALIZE SYSTEM CONTROL PROGRAM/S LOAD UNIT nnnn	Specifies IPL of the system control program (SCP) after system clear reset and assigns a loading device number for the IPL. Entering C displays a previously-specified device number, if any, in the LOAD UNIT field, and places the cursor at the first input field. To alter or newly specify a device number, type the device number and press the Enter key; otherwise, just press the Enter key after entering C. Execution of system clear reset and IPL of SCP at a specified device number can be started by entering E.
D-INITIATE STAND ALONE DUMP/S AUTO STORE STATUS IS (ON) LOAD UNIT nnnn	Specifies IPL of the standalone dump program. Entering D displays a previously-specified device number, if any, in the LOAD UNIT field, and places the cursor at the first character position. To alter or newly specify a device number, type the device number and press the Enter key; otherwise, just press the Enter key after entering D. Execution of standalone dump at a specified device number can be started by entering E. When “AUTO STORE STATUS IS (ON)” is displayed, store status will be performed before standalone dump execution. When “AUTO STORE STATUS IS (OFF)” is displayed, standalone dump will be executed without store status.
P-PSW RESTART/S (REASON : n)	Specifies a restart reason for a logical IP. Entering P places the cursor at the REASON field; type one-digit reason code as shown in the “(RESTART REASONS)” fields, and press the Enter key. Execution of restart can be started by entering E in accordance with the selected restart reason.
E-EXECUTE	Starts execution of C, D, P, T and H functions.
T-START LOGICAL IP/S (TA-ALL)	Specifies start of a logical IP by the following operation: type T and press the Enter key. The specified action can be executed by entering E. To start all logical IPs at a time, type TA and press the Enter key.
H-STOP LOGICAL IP/S (HA-ALL)	Specifies stop of a logical IP by the following operation: type H and press the Enter key. The specified action can be executed by entering E. To stop all logical IPs at a time, type HA and press the Enter key.
SL-SEL. LOGICAL IP: n	Specifies the CPU address of a logical IP to be selected for execution of a frame command suffixed with “/S.” Type SL, press the Enter key, type a CPU address, and press the Enter key.

Table 7-62 SLPSY Frame—Display Fields

Display	Meaning
SCDS	SCDS number(s) of active SCDS(s) currently selected. A pair of SCDS numbers are displayed only in 2-IOCDS mode. Otherwise, only one SCDS number is displayed.
LPAR GROUP	LPAR Group number currently selected. Displayed only in 2-IOCDS mode.
0	LPAR Group 0.
1	LPAR Group 1.
ACT LPAR	Total number of currently-activated LPARs (nn) in both LPAR Groups (0 and 1). Displayed only in 2-IOCDS mode.
nn	

© COMPAREX Informationssysteme GmbH

7.30 (Intentionally Left Blank)

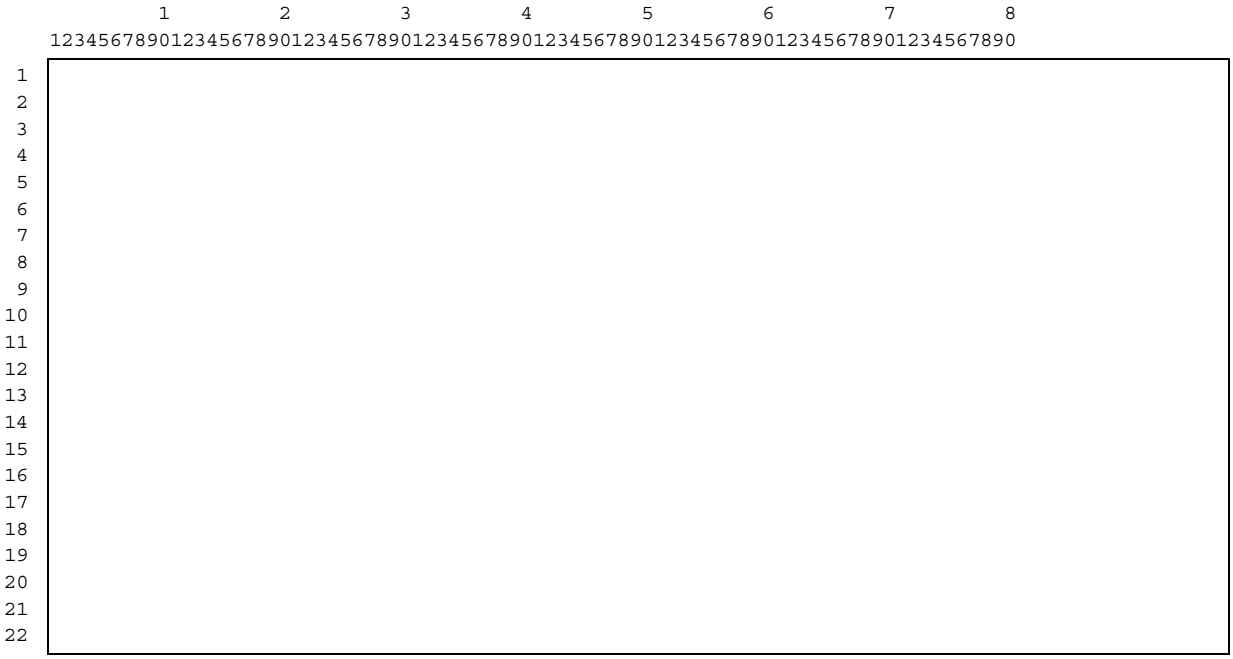

Figure 7-56 (Intentionally Left Blank)

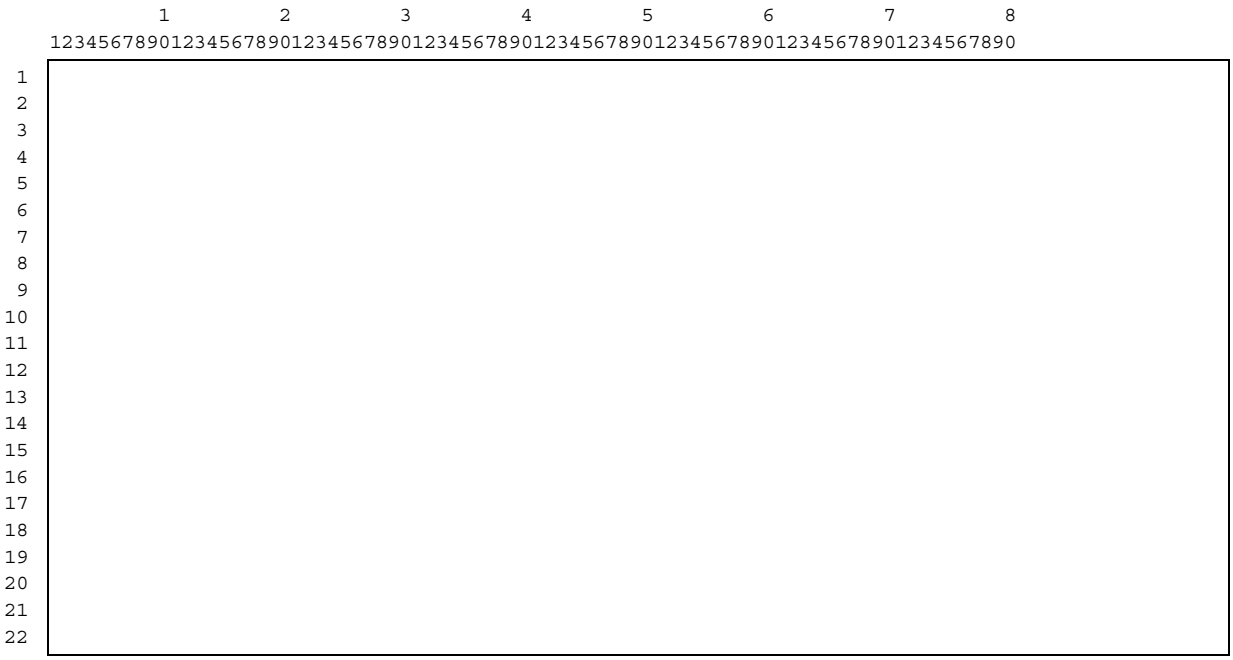

Figure 7-57 (Intentionally Left Blank)

© COMPAREX Informationssysteme GmbH

Table 7-63 (Intentionally Left Blank)

Table 7-64 (Intentionally Left Blank)

© COMPAREX Informationssysteme GmbH

8 LPAR CONTROL COMMAND DETAILS

This chapter describes LPAR control commands in alphabetical order of the command name. Two types of LPAR control commands are available: one for control of a specific LPAR and the other for control of all LPARs. Of the commands for control of a specific LPAR, certain commands are effective only to an OS-LPAR whereas the SYSTEM HCCFDUMP command is effective only to an HCCF-LPAR.

Every LPAR control command requires an applicable user level as defined in chapter 5.

Symbolic conventions

- $\left\{\begin{matrix}\underline{\texttt{X}}\\ \texttt{Y}\end{matrix}\right\}$: Indicates either X or Y can be selected. When choice can be omitted (indicated in a bracket) and no selection is made, an underlined choice will be taken as a default.
- [X]: Indicates X can be omitted.
- Δ: Indicates that one or more blanks are required.
- `Normal_text`: Indicates that the text must be typed as it is.
- *`Italic_text`*: Indicates that what is meant by the text must be entered as a specific text or value.

Explanation of terms

- *`LPAR#`*: A sequential number in one digit starting from 1, displayed on the left of each LPAR name listed on any LPRxxx frame.
- *`LPAR_name`*: A character string for the name of an LPAR beginning with an alphabetic character.
- *`Group#`*: “0” or “1” representing the LPAR Group. Available only in 2-IOCDS mode.

8.1 ACTIVATE Command

- Function: Activates a specified LPAR.
- Input format: $\left\{\begin{matrix}\texttt{ACT}\\ \texttt{ACTIVATE}\end{matrix}\right\}\left[\Delta\left\{\begin{matrix}\texttt{L = }\textit{LPAR\#}\\ \texttt{L = }\textit{LPAR\#,G = Group\#}\\ \texttt{G = }\textit{Group\#}\\ \texttt{L = }\textit{LPAR\_name}\end{matrix}\right\}\right]$
- Operand: With one of the following operands specified, a target LPAR or LPAR Group is assumed. When no operand is specified, the system assumes the currently selected LPAR.
- `L=`*`LPAR#`*: Specifies the target LPAR number. When this operand is specified in 2-IOCDS mode, the system assumes the target LPAR number in the currently selected LPAR Group.
  - `L=`*`LPAR#`*`,G=`*`Group#`*: Specifies the target LPAR number in the target LPAR Group. Available only in 2-IOCDS mode.
  - `G=`*`Group#`*: Specifies the target LPAR Group number, inheriting the currently selected LPAR number. Available only in 2-IOCDS mode.
  - `L=`*`LPAR_name`*: Specifies the target LPAR name.
- Functionally equivalent commands: LPAR frame command F3 on LPRDEF and SLPDEF frames.

8.2 CALL Command

- Function: Calls a specified frame.
- Input format: `CALL`Δ*`Frame_code`*
- Operand (*`Frame_code`*): Specifies a frame code to be called.
- Functionally equivalent command: None.

© COMPAREX Informationssysteme GmbH

8.3 CANCEL Command

- Function: Forcibly changes an LPAR frame displayed on the other CD to the LPRIDX frame.
- Input format: `CANCEL`Δ{`ALL` | *`Frame_code`*}
- Operands:
  - `ALL`: Changes LPAR frames displayed on all the CDs to the LPRIDX frame except on the CD to which this CANCEL command is entered.
  - *`Frame_code`*: Scans LPAR frames displayed on all the other CDs, and changes any LPAR frame on such CDs, if exclusive with the specified one, to the LPRIDX frame. (If not exclusive, no frame change to LPRIDX occurs.) Table 8-1 shows such exclusive (√) and non-exclusive (space) combinations among LPAR frames.
- Functionally equivalent command: None.

© COMPAREX Informationssysteme GmbH

Table 8-1 Exclusive Combinations among LPAR Frames

Frame Code Specified	Frame on Other CD																														
	LPRCA	LPRCH	LPRCTL	LPRDEF	LPRICF	LPRIDX	LPRIPA	LPRIPN	LPRLOG	LPROPC	LPROPT	LPRPFK	LPRPOL	LPRRSC	LPRSSR	LPRSTR	LPRSUM	LPRTIP	LPRTOD	*	SLPAC	SLPAD	SLPDEF	SLPDEV	SLPMSG	SLPOP	SLPOPC	SLPSTS	SLPSY	*
LPRCA		√	√	√	√		√	√		√	√		√	√		√	√	√	√				√			√	√			
LPRCH	√	√	√	√	√		√	√		√	√		√	√		√	√	√	√				√			√	√			
LPRCTL	√	√	√	√	√		√	√		√	√		√	√		√	√	√	√				√			√	√			
LPRDEF	√	√	√	√	√		√	√		√	√		√	√		√	√	√	√				√			√	√			
LPRICF	√	√	√	√	√					√	√		√	√		√	√	√	√				√			√	√			
LPRIDX																														
LPRIPA	√	√	√	√	√		√	√		√	√		√	√		√	√	√	√				√			√	√			
LPRIPN	√	√	√	√	√		√	√		√	√		√	√		√	√	√	√				√			√	√			
LPRLOG							√	√		√																				
LPROP	√	√	√	√	√		√	√	√	√	√	√	√	√	√	√	√	√	√		√	√	√	√	√	√	√	√	√	
LPROPT	√	√	√	√	√					√	√		√	√		√	√	√	√				√			√	√			
LPRPFK							√	√		√																				
LOG-	√	√	√	√	√		√	√		√	√			√		√	√	√	√				√			√	√	√		
LPRRSC	√	√	√	√	√		√	√		√	√		√	√		√	√	√	√				√				√	√		
LPRSSR										√																	√	√		
LPRSTR	√	√	√	√	√		√	√		√	√		√	√		√	√	√	√				√				√			
LPR-	√	√	√	√	√		√	√		√	√		√	√		√	√	√	√				√				√	√		
LPRTIP	√	√	√	√	√		√	√		√	√		√	√		√	√	√	√				√				√	√		
LPRTOD	√	√	√	√	√		√	√		√	√		√	√		√	√	√	√				√				√			
SLPAC										√											√						√	√		
SLPAD										√												√					√			
SLPDEF	√	√	√	√	√		√	√		√	√		√	√		√	√	√	√				√				√	√		
SLPDEV										√														√			√			
SLPMS										√															√		√			
SLPOP										√																√	√	√	√	
SLPOPC	√	√	√	√	√		√	√		√	√	√	√	√	√	√	√	√	√		√	√	√	√	√	√	√	√	√	
SLPSTS	√	√	√	√	√		√	√		√	√	√	√	√	√	√	√	√	√		√	√	√	√	√	√	√	√	√	
SLPSY										√																√	√		√	
*																														

Note: *LPRICF is available only on ICF-installed processor models (C2000-xxA and C2000-xxB). LPRTIP, SLPAC, SLPAD, SLPDEV, SLPOP, and SLPSY are not available on CF2000-0xA Models.*

*Intentionally left blank.

8.4 CG Command

- Function: Available only in 2-IOCDS mode, this command toggles the target LPAR Group from one to the other. Execution of this command automatically selects the LPAR having the smallest LPAR number in the other LPAR Group unless such an LPAR is placed in the status where display of the current LPAR frame is unavailable (command execution cancelled).
- Input format: CG
- Operand: None.
- Functionally equivalent command: None.

8.5 (Intentionally Left Blank)

© COMPAREX Informationssysteme GmbH

8.6 DEACTIVATE Command

- Function: Deactivates a specified LPAR.
- Input format: $\left\{\begin{matrix}\texttt{DEACT}\\ \texttt{DEACTIVATE}\end{matrix}\right\}\Delta\left\{\begin{matrix}\texttt{L = }\textit{LPAR\#}\\ \texttt{L = }\textit{LPAR\#,G = Group\#}\\ \texttt{L = }\textit{LPAR\_nam}\end{matrix}\right\}\texttt{[,FORCE]}$
- Operand: With one of the following operands specified, a target LPAR is assumed.
  - `L=`*`LPAR#`*: Specifies the target LPAR number. Not available in 2-IOCDS mode.
  - `L=`*`LPAR#`*`,G=`*`Group#`*: Specifies the target LPAR number in the target LPAR Group. Available only in 2-IOCDS mode.
  - `L=`*`LPAR_name`*: Specifies the target LPAR name.
- Functionally equivalent commands (except forced deactivation capability): LPAR frame command F4 on LPRDEF and SLPDEF frames.

8.7 DEACTPOL Command

- Function: Deactivates the active Policy Profile.
- Input format: `DEACTPOL`
- Operand: None.
- Functionally equivalent command: None

8.8 LD Command

- Function: Scrolls down the LPAR information display.
- Input format: LD
- Operand: None.
- Functionally equivalent command: None.

8.9 LU Command

- Function: Scrolls up the LPAR information display.
- Input format: LU
- Operand: None.
- Functionally equivalent command: None.

© COMPAREX Informationssysteme GmbH

8.10 MVSTOR Command

- Function: Relocates the MS area assigned to the LPARs in the activated status. The target MS area must be a not-used area.
- Input format: `MVSTOR`Δ{`MSO = Address` / `UP` / `DOWN`},{`L = LPAR#` / `L = LPAR#,G = Group#` / `L = LPAR_name`}
- Operands:
  - 1st operand:
    - `MSO=address`: Specifies a physical MS origin address for relocation. In Real MS Capacity Expansion mode, the address value must be represented as a decimal integer on model-dependent unit size boundaries; otherwise, the address value must be represented as a decimal integer on megabyte boundaries.
    - `UP`: Specifies relocation to the highest possible physical MS area allowable in the current physical MS allocation status.
    - `DOWN`: Specifies relocation to the lowest possible physical MS area allowable in the current physical MS allocation status.
  - 2nd operand: With one of the following operands specified, a target LPAR (in a target LPAR Group if the system is running in 2-IOCDS mode) is assumed. When a proper operand is not specified, the command execution will be cancelled.
    - `L=LPAR#`: Specifies the target LPAR number. Not available in 2-IOCDS mode.
    - `L=LPAR#,G=Group#`: Specifies the target LPAR number in the target LPAR Group. Available only in 2-IOCDS mode.
    - `L=LPAR_name`: Specifies the target LPAR name.
- Functionally equivalent command: None.

8.11 PROTECT Command

- Function: Protects a specified LPAR from the operator's attempts in frame operation and command input other than the UNPROTECT command (section 8.34).

Note: *In MLPF 3.3.0 or below, viewing of any frame on an LPAR protected by the PROTECT command has been impossible. In MLPF 3.3.3, viewing of any frame on an LPAR protected by the PROTECT command has become available.*

- Input format: {`PROT` / `PROTECT`}[Δ{`L = LPAR#` / `L = LPAR#,G = Group#` / `G = Group#` / `L = LPAR_name` / `L = ALL`}]
- Operand: With one of the following operands specified, a target LPAR or LPAR Group is assumed. When no operand is specified, the system assumes the currently selected LPAR.
  - `L=LPAR#`: Specifies the target LPAR number. When this operand is specified in 2-IOCDS mode, the system assumes the target LPAR number in the currently-selected LPAR Group.
  - `L=LPAR#,G=Group#`: Specifies the target LPAR number in the target LPAR Group. Available only in 2-IOCDS mode.
  - `G=Group#`: Specifies the target LPAR Group number, inheriting the currently selected LPAR number. Available only in 2-IOCDS mode.
  - `L=LPAR_name`: Specifies the target LPAR name.
  - `L=ALL`: Specifies all LPARs.
- Functionally equivalent command: None.

© COMPAREX Informationssysteme GmbH

8.12 (Intentionally Left Blank)

8.13 RETRIEVE Command

- Function: Displays up to 16 commands that has been entered since the opening of the target frame.
- Input format: {RET / RETRIEVE}
- Operand: None.
- Functionally equivalent command: PA1 key function in the pull-down menu of Keyboard in LPAR Frame window.

8.14 SAVE Command

- Function: Saves the currently-defined LPAR configuration information into the LPAR configuration file in the SVP hard disk.
- Input format: `SAVE`
- Operand: None.
- Functionally equivalent commands: F2 on LPRCH, LPRCTL, LPRDEF, LPRICF, LPRIP, LPRIPE, LPRRSC, LPRTIP, LPRTOD, and SLPDEF frames.

Note: *The SAVE command is not effective for saving of PF key texts, MLPF system option setting, or MLPF Policy setting. To save the PF key texts and MLPF Policy setting into the corresponding LPAR control file in the SVP, the frame command F2 (each provided on the LPRPFK frame and the LPRPOL frame) must be entered. On the other hand, the control information defined on the LPROPT frame is automatically saved, regardless of the Auto Save setting, at every pressing of the Enter key on the LPROPT frame.*

8.15 SELECT Command

- Function: Selects a specified LPAR as a target LPAR.
- Input format: {SEL / SELECT} Δ {L = *LPAR#* / L = *LPAR#*,G = *Group#* / G = *Group#* / L = *LPAR_name*}
- Operand: With one of the following operands specified, a target LPAR (in a target LPAR Group if the system is running in 2-IOCDS mode) is assumed. When a proper operand is not specified, the command execution will be cancelled. If the operand is specified during display of an SLPxxx frame, the then displayed information on a selected LPAR will change to that of the specified LPAR unless such an LPAR is placed in the status where display of the SLPxxx frame is unavailable (command execution cancelled). On the other hand, if the operand is specified during display of an LPRxxx frame, the then displayed information on entire LPARs will change to that of the relevant LPAR Group unless such an LPAR is placed in the status where display of the LPRxxx frame is unavailable (command execution cancelled).
  - `L=`*`LPAR#`*: Specifies the target LPAR number. When this operand is specified in 2-IOCDS mode, the system assumes the target LPAR number in the currently selected LPAR Group.
  - `L=`*`LPAR#`*`,G=`*`Group#`*: Specifies the target LPAR number in the target LPAR Group. Available only in 2-IOCDS mode.
  - `G=`*`Group#`*: Specifies the target LPAR Group number, inheriting the currently selected LPAR number. Available only in 2-IOCDS mode.
  - `L=`*`LPAR_name`*: Specifies the target LPAR name.
- Functionally equivalent command: None.

© COMPAREX Informationssysteme GmbH

8.16 SETIC Command

- Function: Sets the instruction counter (a register for containing the next-to-be-processed instruction address) of a logical IP. Effective only to an OS-LPAR (consequently meaningless to CF2000-0xA).
- Input format: $\texttt{SETIC}\Delta\texttt{IC} = \mathit{Address}\left[,\left\{\begin{array}{l}\texttt{L} = \mathit{LPAR\#}\\ \texttt{L} = \mathit{LPAR\#,G} = \mathit{Group\#}\\ \texttt{G} = \mathit{Group\#}\\ \texttt{L} = \mathit{LPAR\_name}\end{array}\right\}\right][,\texttt{P} = \mathit{CPU\_address}]$
- Operands:
  - 1st operand (`IC=`*`Address`*): Specifies a hexadecimal 8-digit value to be placed in the instruction counter.
  - 2nd operand: With one of the following operands specified, a target LPAR or LPAR Group is assumed. When no operand is specified, the system assumes the currently-selected LPAR.
    - `L=`*`LPAR#`*: Specifies the target LPAR number. When this operand is specified in 2-IOCDS mode, the system assumes the target LPAR number in the currently selected LPAR Group.
    - `L=`*`LPAR#`*`,G=`*`Group#`*: Specifies the target LPAR number in the target LPAR Group. Available only in 2-IOCDS mode.
    - `G=`*`Group#`*: Specifies the target LPAR Group number, inheriting the currently selected LPAR number. Available only in 2-IOCDS mode.
    - `L=`*`LPAR_name`*: Specifies the target LPAR name.
  - 3rd operand (`P=`*`CPU_address`*): Specifies the CPU address for a selected logical IP. When omitted, the system assumes the latest logical IP selected on any SLPxxx frame.
- Functionally equivalent commands:
  - LPAR frame command I on SLPOP frame.
  - LPAR frame command P on SLPAD frame.

8.17 SYSTEM CHP Command

- Function: Sets the channel path status of a specified LPAR to online/offline.
- Input format: $\left\{\begin{array}{l}\texttt{SYS}\\ \texttt{SYSTEM}\end{array}\right\}\Delta\texttt{CHP},\left\{\begin{array}{l}\texttt{ON}\\ \texttt{OFF}\end{array}\right\} = \mathit{CHPID},\left\{\begin{array}{l}\texttt{L} = \mathit{LPAR\#}\\ \texttt{L} = \mathit{LPAR\#,G} = \mathit{Group\#}\\ \texttt{L} = \mathit{LPAR\_name}\\ \texttt{L} = \mathit{ALL}\end{array}\right\}$

  Note: *Specifying L = ALL in the 3rd operand is available only when OFF is specified in the 2nd operand.*
- Operands:
  - 1st operand (`CHP`): Subcommand (mandatory input).
  - 2nd operand:
    - `ON=`*`CHPID`*: Sets the status of a specified channel path to online.
    - `OFF=`*`CHPID`*: Sets the status of a specified channel path to offline.
  - 3rd operand: With one of the following operands specified, a target LPAR (in a target LPAR Group if the system is running in 2-IOCDS mode) is assumed. When a proper operand is not specified, the command execution will be cancelled.
    - `L=`*`LPAR#`*: Specifies the target LPAR number. Not available in 2-IOCDS mode.
    - `L=`*`LPAR#`*`,G=`*`Group#`*: Specifies the target LPAR number in the target LPAR Group. Available only in 2-IOCDS mode.
    - `L=`*`LPAR_name`*: Specifies the target LPAR name.
    - `L=ALL`: Specifies all LPARs. Available only when channel path is set to the offline status (i.e., OFF is specified in the 2nd operand).
- Functionally equivalent command: Input to ONLINE field on LPRCH frame.

© COMPAREX Informationssysteme GmbH

8.18 SYSTEM ETAF Command

- Function: oFunction: Recovers the ETR ports from the disabled status. This command is not applicable to the CF2000-0xA Models.
- Input format: $\left\{\begin{matrix}\texttt{SYS}\\\texttt{SYSTEM}\end{matrix}\right\}\Delta\texttt{ETAF,ON}$
- Operands:
  - 1st operand (`ETAF`): Subcommand (mandatory input).
  - 2nd operand (`ON`): Enables the ETR ports (mandatory input).
- Functionally equivalent command: None.

8.19 SYSTEM HCCFDUMP Command

- Function: Effective only to an LPAR in HCF mode, this command collects dump data of HCCFA on a specified logical IP (LIP), and activates restart of that LIP.
- Input format: $\left\{\begin{matrix}\texttt{SYS}\\\texttt{SYSTEM}\end{matrix}\right\}\Delta\texttt{HCCFDUMP,}\left\{\begin{matrix}\texttt{L = }\textit{LPAR\#}\\\texttt{L = }\textit{LPAR\#,G = Group\#}\\\texttt{L = }\textit{LPAR\_name}\end{matrix}\right\}\texttt{[,P = }\textit{CPU\_address}\texttt{]}$
- Operands:
  - 1st operand (`HCCFDUMP`): Subcommand (mandatory input).
  - 2nd operand: With one of the following operands specified, a target LPAR (in a target LPAR Group if the system is running in 2-IOCDS mode) is assumed as a target HCCF-LPAR. When a proper operand is not specified, the command execution will be cancelled.
    - `L=`*`LPAR#`*: Specifies the target LPAR number. Not available in 2-IOCDS mode.
    - `L=`*`LPAR#`*`,G=`*`Group#`*: Specifies the target LPAR number in the target LPAR Group. Available only in 2-IOCDS mode.
    - `L=`*`LPAR_name`*: Specifies the target LPAR name.
  - 3rd operand (`P=`*`CPU_address`*): Specifies the CPU address for a selected logical IP. When omitted, the system assumes the logical IP with the smallest CPU address.
- Functionally equivalent command: None.

© COMPAREX Informationssysteme GmbH

8.20 SYSTEM INTERRUPT Command

- Function: Causes an external interruption to a logical IP (LIP). This command is effective only to an LPAR in ESA mode (consequently meaningless to CF2000-0xA Models).
- Input format: $\left\{\begin{matrix}\texttt{SYS}\\\texttt{SYSTEM}\end{matrix}\right\}\Delta\left\{\begin{matrix}\texttt{INT}\\\texttt{INTERRUPT}\end{matrix}\right\}\left[,\left\{\begin{matrix}\texttt{L = }\textit{LPAR\#}\\\texttt{L = }\textit{LPAR\#,G = Group\#}\\\texttt{G = }\textit{Group\#}\\\texttt{L = }\textit{LPAR\_name}\end{matrix}\right\}\right]\texttt{[,P = }\textit{CPU\_address}\texttt{]}$
- Operands:
  - 1st operand `(INT or INTERRUPT)`: Subcommand (mandatory input).
  - 2nd operand: With one of the following operands specified, a target LPAR or LPAR Group is assumed. When no operand is specified, the system assumes the currently-selected LPAR.
    - `L=`*`LPAR#`*: Specifies the target LPAR number. When this operand is specified in 2-IOCDS mode, the system assumes the target LPAR number in the currently selected LPAR Group.
    - `L=`*`LPAR#`*`,G=`*`Group#`*: Specifies the target LPAR number in the target LPAR Group. Available only in 2-IOCDS mode.
    - `G=`*`Group#`*: Specifies the target LPAR Group number, inheriting the currently selected LPAR num ber. Available only in 2-IOCDS mode.
    - `L=`*`LPAR_name`*: Specifies the target LPAR name.
  - 3rd operand `(P=`*`CPU_Address`*`)`: Specifies the CPU address for a selected logical IP to cause an external interruption. When omitted, the system assumes the latest logical IP selected on any SLPxxx frame.
- Functionally equivalent command: None.

8.21 SYSTEM IP Command

- Function: Reconnects or disconnects a physical IP.
- Input format: $\left\{\begin{matrix}\texttt{SYS}\\\texttt{SYSTEM}\end{matrix}\right\}\Delta\texttt{IP,}\left\{\begin{matrix}\texttt{ON}\\\texttt{OFF}\end{matrix}\right\}\texttt{ = }\textit{Physical\_IP\_address}$
- Operands:
  - 1st operand (`IP`): Subcommand (mandatory input).
  - 2nd operand:
    - `ON=`*`Physical_IP_address`*: Specifies the target physical IP to be reconnected.
    - `OFF=`*`Physical_IP_address`*: Specifies the target physical IP to be disconnected. Prerequires offlining of any logical IP fixed-shared by the target physical IP from the operating system.
- Functionally equivalent command: None.

© COMPAREX Informationssysteme GmbH

8.22 SYSTEM IPL Command

- Function: Executes IPL of a specified logical IP (LIP). This command is effective only to an LPAR in ESA mode (consequently meaningless to CF2000-0xA Models).

- Input format:

```
{SYS    }
{SYSTEM}ΔIPL,UNIT = Unit_address[,LOADPARM = Parameter]
[,{CLEAR  }]
[,{REWIND}]
[,{L = LPAR#                  }]
[,{L = LPAR#,G = Group#       }]
[,{G = Group#                 }]
[,{L = LPAR_name              }]
[,P = CPU_address]
```

- Operands:
  - 1st operand `(IPL)`: Subcommand (mandatory input).
  - 2nd operand `(UNIT=`*`Unit_address`*`)`: Specifies the loading device for IPL of an LPAR. Input as the unit address must be a device number.
  - 3rd operand `(LOADPARM=`*`Parameter`*`)`: Specifies a load parameter in up to eight characters to be used by the OS during IPL.
  - 4th operand `(CLEAR or REWIND)`: `CLEAR` starts IPL after execution of system clear reset, whereas `REWIND` starts IPL after issuance of a rewind command to a magnetic tape unit specified by the `UNIT` operand.
  - 5th operand: With one of the following operands specified, a target LPAR or LPAR Group to which a logical IP to be IPLed belongs is assumed. When no operand is specified, the system assumes the currently-selected LPAR.
    - `L=`*`LPAR#`*: Specifies the target LPAR number. When this operand is specified in 2-IOCDS mode, the system assumes the target LPAR number in the currently selected LPAR Group.
    - `L=`*`LPAR#`*`,G=`*`Group#`*: Specifies the target LPAR number in the target LPAR Group. Available only in 2-IOCDS mode.
    - `G=`*`Group#`*: Specifies the target LPAR Group number, inheriting the currently selected LPAR number. Available only in 2-IOCDS mode.
    - `L=`*`LPAR_name`*: Specifies the target LPAR name.
- 6th operand `(P=`*`CPU_address`*`)`: Specifies the CPU address for a logical IP to be IPLed. When omitted, the system assumes the latest logical IP selected on any SLPxxx frame.
- Functionally equivalent commands:
  - LPAR frame commands O4, O7 (CLEAR), and O9 (REWIND) on SLPOP frame.
  - LPAR frame command C on SLPSY frame.

© COMPAREX Informationssysteme GmbH

8.23 SYSTEM ISTEP Command

- Function: Specifies/resets the instruction step mode to a specified logical IP (LIP). This command is effective only to an LPAR in ESA mode (consequently meaningless to CF2000-0xA Models).
- Input format:

```
{SYS    }
{SYSTEM } ΔISTEP [,{ON }] [,{L = LPAR#                }] [,P = CPU_address]
                   {OFF}    {L = LPAR#,G = Group#     }
                             {G = Group#               }
                             {L = LPAR_name            }
```

- Operands:
  - 1st operand (`ISTEP`): Subcommand (mandatory input).
  - 2nd operand (`ON` or `OFF`): `ON` specifies the instruction step mode, whereas `OFF` resets the instruction step mode. When this operand is omitted, `OFF` will be assumed.
  - 3rd operand: With one of the following operands specified, a target LPAR or LPAR Group is assumed. When no operand is specified, the system assumes the currently-selected LPAR.
    - `L=`*`LPAR#`*: Specifies the target LPAR number. When this operand is specified in 2-IOCDS mode, the system assumes the target LPAR number in the currently selected LPAR Group.
    - `L=`*`LPAR#`*`,G=`*`Group#`*: Specifies the target LPAR number in the target LPAR Group. Available only in 2-IOCDS mode.
    - `G=`*`Group#`*: Specifies the target LPAR Group number, inheriting the currently selected LPAR number. Available only in 2-IOCDS mode.
    - `L=`*`LPAR_name`*: Specifies the target LPAR name.
  - 4th operand (`P=`*`CPU_address`*): Specifies the CPU address of a logical IP to be driven in the instruction step mode. When omitted, the system assumes the latest logical IP selected on any SLPxxx frame.
- Functionally equivalent command: LPAR frame command Rn on SLPOP frame.

8.24 SYSTEM LIPCNV Command

- Function: Changes the scheduling mode of a specified logical IP (LIP) from dedicated-offline status to shared-offline status or vice versa.
- Input format:

```
{SYS    }
{SYSTEM } ΔLIPCNV [,{L = LPAR#                }] [,P = CPU_address]
                   {L = LPAR#,G = Group#     }
                   {L = LPAR_name            }
```

- Operands:
  - 1st operand (`LIPCNV`): Subcommand (mandatory input).
  - 2nd operand: Specifies a target LPAR or LPAR Group. When no operand is specified, the system assumes the currently-selected LPAR.
    - *`L=LPAR#`*: Specifies the target LPAR number. Not available in 2-IOCDS mode.
    - *`L=LPAR#,G=Group#`*: Specifies the target LPAR number in the target LPAR Group. Available only in 2-IOCDS mode.
    - *`L=LPAR_name`*: Specifies the target LPAR name.
- 3rd operand (*`P=CPU_address`*): Specifies the CPU address of the target LIP.
- Functionally equivalent command: None.

© COMPAREX Informationssysteme GmbH

8.25 SYSTEM LIPOFF Command

- Function: Offlines a specified online logical IP (LIP).
- Input format: $\left\{\begin{matrix}\texttt{SYS}\\\texttt{SYSTEM}\end{matrix}\right\}\Delta\texttt{LIPOFF}\left[,\left\{\begin{matrix}\texttt{L = }\textit{LPAR\#}\\\texttt{L = }\textit{LPAR\#,G = Group\#}\\\texttt{L = }\textit{LPAR\_name}\end{matrix}\right\}\right]\texttt{[,P = }\textit{CPU\_address}\texttt{]}$
- Operands:
  - 1st operand (*LIPOFF*): Subcommand (mandatory input).
  - 2nd operand: Specifies a target LPAR or LPAR Group. When no operand is specified, the system assumes the currently-selected LPAR.
    - *L=LPAR#*: Specifies the target LPAR number. Not available in 2-IOCDS mode.
    - *L=LPAR#,G=Group#*: Specifies the target LPAR number in the target LPAR Group. Available only in 2-IOCDS mode.
    - *L=LPAR_name*: Specifies the target LPAR name.
  - 3rd operand (*P=CPU_address*): Specifies the CPU address of the target LIP.
- Functionally equivalent command: None.

8.26 SYSTEM LIPON Command

- Function:Onlines a specified offline logical IP (LIP).
- Input format: $\left\{\begin{matrix}\texttt{SYS}\\\texttt{SYSTEM}\end{matrix}\right\}\Delta\texttt{LIPON}\left[,\left\{\begin{matrix}\texttt{L = }\textit{LPAR\#}\\\texttt{L = }\textit{LPAR\#,G = Group\#}\\\texttt{L = }\textit{LPAR\_name}\end{matrix}\right\}\right]\texttt{[,P = }\textit{CPU\_address}\texttt{]}$
- Operands:
  - 1st operand (*LIPON*): Subcommand (mandatory input).
  - 2nd operand: Specifies a target LPAR or LPAR Group. When no operand is specified, the system assumes the currently-selected LPAR.
    - *L=LPAR#*: Specifies the target LPAR number. Not available in 2-IOCDS mode.
    - *L=LPAR#,G=Group#*: Specifies the target LPAR number in the target LPAR Group. Available only in 2-IOCDS mode.
    - *L=LPAR_name*: Specifies the target LPAR name.
  - 3rd operand (P=CPU_address): Specifies the CPU address of the target LIP.
- Functionally equivalent command: None.

8.27 (Intentionally Left Blank)

© COMPAREX Informationssysteme GmbH

8.28 SYSTEM RESET Command

- Function: Starts a system reset or system clear reset. This command is effective only to an LPAR in ESA mode (consequently meaningless to CF2000-0xA Models).
- Input format:

$$\left\{\begin{matrix}\texttt{SYS}\\ \texttt{SYSTEM}\end{matrix}\right\}\Delta\texttt{RESET[,CLEAR]}\left[,\left\{\begin{matrix}\texttt{L = }\textit{LPAR\#}\\ \texttt{L = }\textit{LPAR\#,G = Group\#}\\ \texttt{G = }\textit{Group\#}\\ \texttt{L = }\textit{LPAR\_name}\end{matrix}\right\}\right]$$

- Operands:
  - 1st operand (RESET): Subcommand (mandatory input).
  - 2nd operand (CLEAR): Specifies a system clear reset. When omitted, the system assumes a system reset.
  - 3rd operand: With one of the following operands specified, a target LPAR or LPAR Group is assumed. When no operand is specified, the system assumes the currently-selected LPAR.
    - L=*LPAR#*: Specifies the target LPAR number. When this operand is specified in 2-IOCDS mode, the system assumes the target LPAR number in the currently selected LPAR Group.
    - L=*LPAR#*,G=*Group#*: Specifies the target LPAR number in the target LPAR Group. Available only in 2-IOCDS mode.
    - G=*Group#*: Specifies the target LPAR Group number, inheriting the currently selected LPAR num ber. Available only in 2-IOCDS mode.
    - L=*LPAR_name*: Specifies the target LPAR name.
- Functionally equivalent commands: LPAR frame commands O3 and O6 on SLPOP frame.

8.29 SYSTEM RESTART Command

- Function: Causes a restart interruption to a specified logical IP (LIP). This command is effective only to an LPAR in ESA mode (consequently meaningless to CF2000-0xA Models).
- Input format:

$$\left\{\begin{matrix}\texttt{SYS}\\ \texttt{SYSTEM}\end{matrix}\right\}\Delta\left\{\begin{matrix}\texttt{RST}\\ \texttt{RESTART}\end{matrix}\right\}\left[,\left\{\begin{matrix}\texttt{L = }\textit{LPAR\#}\\ \texttt{L = }\textit{LPAR\#,G = Group\#}\\ \texttt{G = }\textit{Group\#}\\ \texttt{L = }\textit{LPAR\_name}\end{matrix}\right\}\right]\texttt{[,P = }\textit{CPU\_address}\texttt{]}$$

- Operands:
  - 1st operand (RST or RESTART): Subcommand (mandatory input).
  - 2nd operand: With one of the following operands specified, a target LPAR or LPAR Group to which a logical IP to be restarted belongs is assumed. When no operand is specified, the system assumes the currently-selected LPAR.
    - L=*LPAR#*: Specifies the target LPAR number. When this operand is specified in 2-IOCDS mode, the system assumes the target LPAR number in the currently selected LPAR Group.
    - L=*LPAR#*,G=*Group#*: Specifies the target LPAR number in the target LPAR Group. Available only in 2-IOCDS mode.
    - G=*Group#*: Specifies the target LPAR Group number, inheriting the currently selected LPAR number. Available only in 2-IOCDS mode.
    - L=*LPAR_name*: Specifies the target LPAR name.
  - 3rd operand (P=*CPU_address*): Specifies the CPU address of a logical IP to be restarted. When omitted, the system assumes the latest logical IP selected on any SLPxxx frame.
- Functionally equivalent commands:
  - LPAR frame command O2 on SLPOP frame.
  - LPAR frame command P on SLPSY frame.

© COMPAREX Informationssysteme GmbH

8.30 SYSTEM START Command

- Function: Starts a specified logical IP (LIP). If the LIP is in the instruction step mode, one entry of this command executes only one instruction. This command is effective only to an LPAR in ESA mode (consequently meaningless to CF2000-0xA Models).
- Input format:

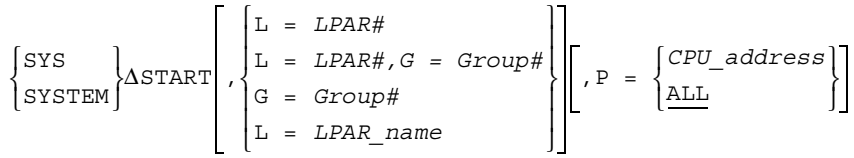

- Operands:
  - 1st operand (`START`): Subcommand (mandatory input).
  - 2nd operand: With one of the following operands specified, a target LPAR or LPAR Group to which a logical IP to be started belongs is assumed. When no operand is specified, the system assumes the currently-selected LPAR.
    - `L=`*`LPAR#`*: Specifies the target LPAR number. When this operand is specified in 2-IOCDS mode, the system assumes the target LPAR number in the currently selected LPAR Group.
    - `L=`*`LPAR#`*`,G=`*`Group#`*: Specifies the target LPAR number in the target LPAR Group. Available only in 2-IOCDS mode.
    - `G=`*`Group#`*: Specifies the target LPAR Group number, inheriting the currently selected LPAR number. Available only in 2-IOCDS mode.
    - `L=`*`LPAR_name`*: Specifies the target LPAR name.
  - 3rd operand (`P=`*`CPU_address`* `or P=ALL`): Specifies the CPU address of a logical IP to be started. When omitted, the system assumes all logical IPs.
- Functionally equivalent commands: LPAR frame command T on SLPOP frame and T on SLPSY frame.

8.31 SYSTEM STOP Command

- Function: Stops a specified logical IP (LIP). This command is effective only to an LPAR in ESA mode (consequently meaningless to CF2000-0xA Models).
- Input format:

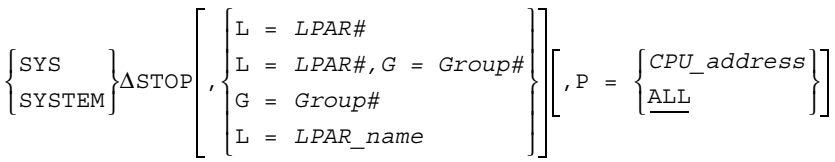

- Operands:
  - 1st operand (`STOP`): Subcommand (mandatory input).
  - 2nd operand: With one of the following operands specified, a target LPAR or LPAR Group to which a logical IP to be stopped belongs is assumed. When no operand is specified, the system assumes the currently-selected LPAR.
    - `L=`*`LPAR#`*: Specifies the target LPAR number. When this operand is specified in 2-IOCDS mode, the system assumes the target LPAR number in the currently selected LPAR Group.
    - `L=`*`LPAR#`*`,G=`*`Group#`*: Specifies the target LPAR number in the target LPAR Group. Available only in 2-IOCDS mode.
    - `G=`*`Group#`*: Specifies the target LPAR Group number, inheriting the currently selected LPAR number. Available only in 2-IOCDS mode.
    - `L=`*`LPAR_name`*: Specifies the target LPAR name.
  - 3rd operand (`P=`*`CPU_address`* `or P=ALL`): Specifies the CPU address of a logical IP to be stopped. When omitted, the system assumes all logical IPs.
- Functionally equivalent commands: H on SLPOP frame and H on SLPSY frame.

© COMPAREX Informationssysteme GmbH

8.32 SYSTEM STORESTATUS Command

- Function: Stores the status of a specified logical IP (LIP). This command is effective only to an LPAR in ESA mode (consequently meaningless to CF2000-0xA Models).
- Input format: $\left\{\begin{matrix}\texttt{SYS}\\ \texttt{SYSTEM}\end{matrix}\right\}\Delta\left\{\begin{matrix}\texttt{STS}\\ \texttt{STORESTATUS}\end{matrix}\right\}\left[,\left\{\begin{matrix}\texttt{L = }\mathit{LPAR\#}\\ \texttt{L = }\mathit{LPAR\#,G = Group\#}\\ \texttt{G = }\mathit{Group\#}\\ \texttt{L = }\mathit{LPAR\_name}\end{matrix}\right\}\right][\texttt{,P = }\mathit{CPU\_address}]$
- Operands:
  - 1st operand (`STS` or `STORESTATUS`): Subcommand (mandatory input).
  - 2nd operand: With one of the following operands specified, a target LPAR or LPAR Group to which a logical IP for the store status operation belongs is assumed. When no operand is specified, the system assumes the currently-selected LPAR.
    - `L=`*`LPAR#`*: Specifies the target LPAR number. When this operand is specified in 2-IOCDS mode, the system assumes the target LPAR number in the currently selected LPAR Group.
    - `L=`*`LPAR#`*`,G=`*`Group#`*: Specifies the target LPAR number in the target LPAR Group. Available only in 2-IOCDS mode.
    - `G=`*`Group#`*: Specifies the target LPAR Group number, inheriting the currently selected LPAR number. Available only in 2-IOCDS mode.
    - `L=`*`LPAR_name`*: Specifies the target LPAR name.
  - 3rd operand (`P=`*`CPU_address`*): Specifies the CPU address of a logical IP for the store status operation. When omitted, the system assumes the latest logical IP selected on any SLPxxx frame.
- Functionally equivalent command: LPAR frame commandO5 on SLPOP frame.

8.33 TOD Command

- Function: Specifies time to be set to the TOD in response to the message “MTR001: TOD IS NOT SET OR NOT SYNC” displayed when the TOD value is missing (discharged battery or any other reason) at startup of MLPF. The TOD value set with this command is effective to all LPARs.
- Input format: `TODΔDATE=`*`yymmdd`*`,TIME=`*`hhmmss`*
- Operands:
  - 1st operand (`DATE=`*`yymmdd`*): Year, month and day each in two digits.
    Years 88–99 represent 1988–1999 A.D., and years 00–41 represent 2000–2041 A.D.
  - 2nd operand (`TIME=`*`hhmmss`*): Hour, minute and second each in two digits.
- Functionally equivalent command: None.

© COMPAREX Informationssysteme GmbH

8.34 UNPROTECT Command

- Function: Releases protection specified by the PROTECT command (section 8.11) from a designated LPAR and enables further frame operation and command input to the LPAR.
- Input format:

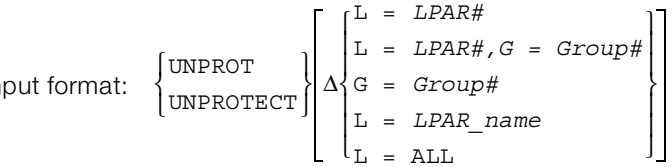

- Operand: With one of the following operands specified, a target LPAR or LPAR Group is assumed. When no operand is specified, the system assumes the currently selected LPAR.
  - `L=`*`LPAR#`*: Specifies the target LPAR number. When this operand is specified in 2-IOCDS mode, the system assumes the target LPAR number in the currently selected LPAR Group.
  - `L=`*`LPAR#`*`,G=`*`Group#`*: Specifies the target LPAR number in the target LPAR Group. Available only in 2-IOCDS mode.
  - `G=`*`Group#`*: Specifies the target LPAR Group number, inheriting the currently selected LPAR number. Available only in 2-IOCDS mode.
  - `L=`*`LPAR_name`*: Specifies the target LPAR name.
  - `L=ALL`: Specifies all LPARs.
- Functionally equivalent command: None.

© COMPAREX Informationssysteme GmbH

9 MLPF ERROR RECOVERY

9.1 Outline of MLPF Error Recovery

Figure 9-1 provides an outline flowchart for recovery of an MLPF error.

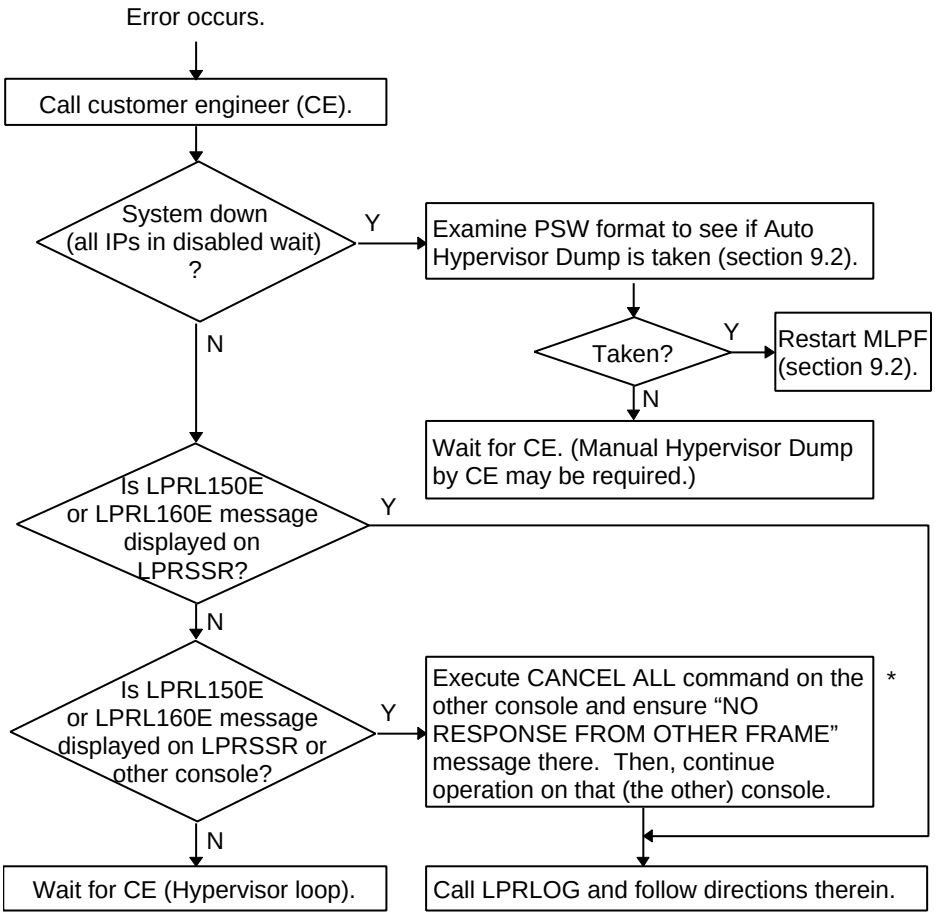

Figure 9-1 MLPF Error Recovery Flowchart

* Without this step, calling of certain frames on the other console will be cancelled.

© COMPAREX Informationssysteme GmbH

9.2 Detailed Recovery Actions at MLPF Abend

At an MLPF abend (system down), follow the steps below to recover the system.

1. Examine the PSW on the then-displayed console frame to see if Auto Hypervisor Dump is taken (PSW format in Figure 9-2). If not, wait for your customer engineer (CE) because Manual Hypervisor Dump operation by CE may be required.
2. Upon request from CE, print hardcopy of the then-displayed console frame and restart the MLPF by executing SYSTEM INITIALIZE (SI) on the Operator Control (OPRCTL) frame.

When Auto Hypervisor Dump has been taken, the PSW will provide the MLPF failure information as illustrated in Figure 9-2. The format and the meaning of such MLPF failure information are as follows:

- Abend code: Shows the failure contents. See Table 9-1 for details.
- Reason code: Shows supplementary failure information. See Table 9-1 for details.
- Routine code: Shows the routine where a failure or an abnormal condition is detected.
  - 0: MLPF Initializer
  - 1: Execution Management routine or Error Management routine
  - 4: Hypervisor Dump Control routine or HCCF Dump Control routine
  - 6: PMC Broadcast routine or PMC Control routine
  - 8: Section Management routine (part of Execution Management routine)
  - 9: TOD Synchronization routine (part of Execution Management routine)
  - A: LPAR Frame Control routine
  - B: Resource Management routine
  - C: LPAR Control routine
  - D: LPAR Control routine for 2-IOCDS mode (on M2000 only)
  - F: Logical IP Control routine

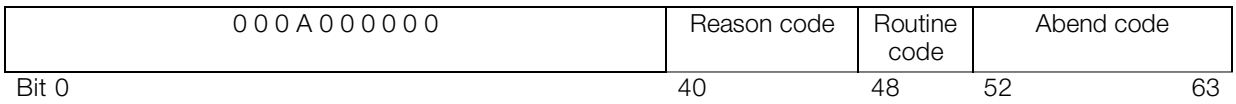

Figure 9-2 PSW Format at MLPF Abend

© COMPAREX Informationssysteme GmbH

Table 9-1 Details of Abend Codes and Reason Codes

Abend Type	**Abend Code**		**Reason Code**	**(Sheet 1 of 2)**
	Value	**Meaning**	**Value**	**Meaning**
Macro Error	021	CC=1 detected in macro	SVC code	—
Hardware	008	Invalid restart	—	—
	018	Invalid external interruption	—	—
	020	Invalid SVC interruption	SVC code	—
	028	Invalid program interruption	PGM INT code	—
	030	Invalid MCK interruption	MCIC byte 0	—
	038	Invalid I/O interruption	ISC	—
	040	SIE Interception	01	Invalid SD
	041	HVA	01	CC
			02	HSW
			03	Timeout
	042	Memory error	—	—
	043	Invalid instruction by Hypervisor	—	—
	044*	ETAF synchronization failure*	—	—
Stack	027 or 100	GR stack destroyed	—	—
Internal Interface Error	101	Incorrect command code	01	Undefined code
			02	Unacceptable code
	102	Incorrect data	00	Unidentified
			01	GR2 has additional information (normally a table address).
	103	Incorrect GR	—	—
	104	Initial setup failing	00	Cause unknown
			01	Insufficient memory
	105	Limit over	01	Insufficient display buffer
			02	Insufficient error information buffer
			03	Over the concurrent-command-processing limit (8 commands)
	106	Time over	01	Lock
			02	Response
	107	Monitor error	75	Unmatching task status
			76	Queue violation
			77	Missing area for scheduler's use
	108	Destroyed queue	—	—
	109	Unpredictable status	—	—
	111	Storage Manager fault	—	—
External Interface Error	230	Invalid AEID	AEID	—
	231	Incorrect AE code	AEID	—
	232	Incorrect ECB	—	—
	233	Error report from the requesting equipment (processing discontinued)	Last digit of Transfer ID	—
			0	Cause unknown

© COMPAREX Informationssysteme GmbH

Abend Type	Abend Code		Reason Code	(Sheet 2 of 2)
	Value	**Meaning**	**Value**	**Meaning**
Loader	301	HVACTL instruction	01	CC
			02	HSW
	310	Incorrect hardware information	00	Unidentified
			01	GR2 has hardware information ID.
			02**	Duplicated LPAR name**
	311	Incorrect file information	Hyper device #	—
	313	Incorrect hardware information	00	Unidentified
			01	GR2 has hardware information ID.
	318	Invalid external interruption	—	—
	320	Invalid SVC interruption	—	—
	328	Invalid program interruption	—	—
	330	Invalid MCK interruption	—	—
	338	Invalid I/O interruption	—	—
Recovery	B00	IP recovered from error	—	—
	B01	TOD processing error	—	—
Unidentified	FF0	—	—	—

* Applicable only to ETAF-installed processor models (M2000, C2000-xx6, C2000-xxA, and C2000-xxB).
** Applicable only to M2000 capable of 2-IOCDS mode operation.

© COMPAREX Informationssysteme GmbH

10 MLPF MESSAGES

10.1 Introduction to MLPF Messages

10.1.1 Display Format

The display format of each message is represented as “LPRsnnnl: text.” In some cases, a message may indicate an abend code to provide further information as shown in chapter 9.

- s: Section ID usually represented by an initial character of routine name which issued the message.
  - M: Monitor routine
  - F: LPAR Frame Control routine
  - R: Resource Management routine
  - L: LPAR Control routine
  - P: Logical IP Control routine
  - B: PMC Broadcast routine
  - G: PMC Control routine
- nnn: Message code represented by a decimal number from 001 to 999.
- l: Level code in one character representing a message level.
  - I: Information. Not an error but for information only.
  - W: Warning. A failure occurred but has been recovered without affecting the system.
  - E: Error. A failure occurred, and the system has failed to recover it and has been affected. The system has continued processing except the failure portion.
  - S: Syntax error. Because of a syntax error in a specified operation, the system has aborted processing but has not been affected.
  - U: Severe error. A serious failure occurred and has caused a serious effect to the system. If no action is taken, the result may be a hang-up of processing.
  - A: Operator action. The system is requesting an operator action.
- text: Message text that gives detailed information on the message.

10.1.2 Explanation Format

In section 10.2, each message is explained in the following format (example):

①→	LPRF099E
②→	UNEXPECTED MESSAGE CODE=|message code|.
③→	A message code not defined to the MLPF has been detected.
④→	S: Continues processing.
⑤→	O: Report the message ID and the message text to the field engineer.

①: Message ID.
②: Message text.
③: Meaning/explanation.
④: System’s action after the message output.
⑤: Operator’s action required.

Note: *Message ID in section 10.2 shows a typical section ID; actual messages sometimes appear with different section IDs.*

10.1.3 Symbolic Conventions

- |X| : Indicates that X is displayed as supplementary information.
- $\left\{\begin{matrix}X\\Y\end{matrix}\right\}$: Indicates that either X or Y is displayed.
- [X] : Indicates that X is displayed or not, depending on cases.

© COMPAREX Informationssysteme GmbH

10.2 Contents and Explanation of MLPF Messages

LPRF001S
ERROR OCCURRED.
A field data entry or a command execution has encountered an error. S: Suspends the specified operation. O: Reenter a correct field data or command.

LPRL020E
RESOURCE--LPAR INTERFACE ERROR. RC=|reason code|
An error has occurred on the interface between the resource management routine and the LPAR control routine. S: Suspends the specified operation. O: Report the message ID and the message text to the field engineer.

LPRL021E
FRAME--LPAR INTERFACE ERROR. RC=|reason code|
An error has occurred on the interface between the LPAR frame control routine and the LPAR control routine. S: Suspends the specified operation. O: Report the message ID and the message text to the field engineer.

LPRL022E
LOGICAL IP--LPAR INTERFACE ERROR. RC=|reason code|
An error has occurred on the interface between the logical IP control routine and the LPAR control routine. S: Suspends the specified operation. O: Report the message ID and the message text to the field engineer.

LPRR040E
ERROR DETECTED IN RESOURCE MANAGEMENT ROUTINE.
An error has been detected in the resource management routine. S: Suspends the specified operation. O: Report the message ID and the message text to the field engineer.

LPRL050W
COMMAND ENDED WITH WARNINGS. CALL LPRSSR FOR DETAILS.
The specified command has ended with a warning-level message. See the LPRSSR frame for the contents of the warning-level message. S: Continues processing. O: See the LPRSSR frame for the contents of the warning-level message.

LPRL051E
COMMAND FAILED WITH WARNINGS. CALL LPRSSR FOR DETAILS.
The specified command has failed with a warning-level message. See the LPRSSR frame for the contents of the warning-level message. S: Continues processing. O: See the LPRSSR frame for the contents of the warning-level message.

© COMPAREX Informationssysteme GmbH

LPRF099E
UNEXPECTED MESSAGE CODE=|message code|.
A message code not defined to the MLPF has been detected. S: Continues processing. O: Report the message ID and the message text to the field engineer.

LPRM100A
SET TOD CLOCK. REASON = {ASYN / NOTS}
Setting of the TOD clock is required because the TOD clock on the physical processor complex is not synchronized (ASYN) or is not set (NOTS). S: Waits for setting of the TOD clock. O: Set the TOD clock by entering the TOD command and specifying the TOD Clock key function (selection from the pull-down menu or pressing of the Alt + E key combination in the LPAR Frame window) on any CD.

LPRM101U
TOD CLOCK SETTING FAILED. REASON = {ASYN / SEC}
Attempt to set the TOD clock has failed because the TOD clock on the physical processor complex has not been synchronized (ASYN) or has been placed in the secured state (SEC). S: Waits for setting of the TOD clock. O: Retry setting of the TOD clock.

LPRM102U
TOD CLOCK NOT ACTIVE.
The TOD clock has been stopped and cannot be activated. S: Comes to a system down. O: Report the message ID and the message text to the field engineer.

LPRM103I
MLPF INITIALIZATION IN PROCESS.
The MLPF is in the process of initialization. S: Continues processing. O: No action.

LPRM109W
AUTO ACTIVATION COMPLETED WITH WARNINGS. CALL LPRSSR FOR DETAILS.
Automatic activation process has ended with a warning-level message. See the LPRSSR frame for the contents of the warning-level message. S: Continues processing. O: See the LPRSSR frame for the contents of the warning-level message.

LPRM110I
AUTO ACTIVATION IN PROCESS.
Auto activation for (a) specified LPAR(s) is in process. The operator can abort the auto activation processing for all the specified LPARs by pressing the Esc key within 10 seconds from when this message appears. S: Continues processing. O: No action.

© COMPAREX Informationssysteme GmbH

LPRM111I
AUTO ACTIVATION CANCELED.
A cancel request for the ongoing auto activation has been accepted and the auto activation has been aborted. S: Continues processing. O: Activate each LPAR manually. Once the LPAR configuration information is saved before activation of any LPAR, auto activation in next MLPF start will be disabled.

LPRM112I
CANCEL KEY REJECTED.
The Esc key input intended to abort the ongoing auto activation has been rejected because the key was pressed over the acceptable interval (10 seconds from when the message LPRM110I appears) or a previous Esc key input has already been accepted. S: Continues processing. O: No action.

LPRM113I
AUTO ACTIVATION ENDED.
Auto activation for (a) specified LPAR(s) has ended. S: Continues processing. O: No action.

LPRM114I
INITIALIZATION PENDING FOR I/O P.ON COMP. WAIT TIME=|minutes| MIN.
Initialization of LPAR is pending by xxx minutes for I/O power-on completion. The purpose of this is to set all I/Os to ready status before auto IPL. S: Starts MLPF initialization after xxx minutes. O: No action.

LPRM115U
FAILURE OCCURRED DURING SYNCHRONIZED PROCESS IN ETAF.
MLPF initialization failed during synchronizing process with the ETAF. This message only applies to a processor model on which an External Timer Attachment Feature is installed. S: Unable to recover. Requires the MLPF Initialize operation again. O: Ensure the connection with the ETAF, and try to initialize MLPF again. If this problem continues, report the message ID and the message text to the field engineer.

LPRM116E
PHYSICAL IP ONLINE COMMAND FAILED DUE TO UNEXPECTED IP STATUS.
Execution of the Physical IP Online command has failed because the specified IP is not in applicable status. S: Suspends the specified operation. O: Reenter a correct IP number and retry the suspended operation.

LPRM117E
COMMAND REJECTED, MLPF REQUIRED AT LEAST ONE PHYSICAL IP.
The Physical IP Offline command has been rejected because the specified IP is the last online physical IP (minimum requirement). S: Suspends the specified operation. O: Reenter a correct IP number and retry the suspended operation.

© COMPAREX Informationssysteme GmbH

LPRM118E
PHYSICAL IP n OFFLINE FAILED: UNEXPECTED PIP STATUS.
Offlining of the physical IP (PIP) n has failed because it is unexpectedly found in the status unable to be offlined. S: Suspends the specified operation. O: Reenter a correct IP number and retry the suspended operation.

LPRM119E
PHYSICAL IP n ONLINE FAILED: IP IS NOT INSTALLED.
Onlining of the physical IP n has failed because it is not installed. S: Suspends the specified operation. O: Reenter a correct IP number and retry the suspended operation.

LPRM120E
PHYSICAL IP n OFFLINE FAILED: IP IS NOT INSTALLED.
Offlining of the physical IP n has failed because it is not installed. S: Suspends the specified operation. O: Reenter a correct IP number and retry the suspended operation.

LPRM121E
HYPERVISOR ABNORMAL CONDITION (|abend code|) DETECTED. DUMP IN PROCESS.
MLPF Hypervisor has detected its own abnormal condition, and hence dump of Hypervisor is being taken. S: Continues processing, while causing only the error-detected Hypervisor task to abend. O: Report the message ID and the message text to the field engineer.

LPRM122I
MLPF-DUMP PROCESSING ENDED NORMALLY.
MLPF-dump processing has ended normally S: Continues processing. O: Follow guidance on the LPRLOG frame.

LPRM123W
ASYNCHRONOUS MESSAGE BUFFER FULL. |No. of messages nnnnn| MESSAGES DELETED.
The indicated number of messages have been deleted from the asynchronous message buffer because the buffer has become full. S: Continues processing. O: Follow guidance on the LPRLOG frame.

LPRM129E
FAILURE NOT HANDLED BY POLICY TASK: TASK BUSY OR NOT RESPONDING.
A failure occurred but no error handling action by the Policy task has been initiated because the task was busy or not responding. S: No action. O: Perform the error recovery operation or consult the field engineer.

© COMPAREX Informationssysteme GmbH

LPRM130E
FAILURE NOT REPORTED TO POLICY TASK: STACK OVERFLOW.
A failure occurred but no error handling action by the Policy task has been initiated because the task was busy or not responding. S: No action. O: Perform the error recovery operation or consult the field engineer.

LPRM131E
PHYSICAL IP n ONLINE FAILED: IP IS CHECK-STOPPED.
Onlining of the physical IP n has failed because it is check-stopped. S: Suspends the specified operation. O: No action.

LPRM132E
PHYSICAL IP n ONLINE FAILED: UNEXPECTED CODE=|response code xxxx|.
Onlining of the physical IP n has failed because of the given unexpected response code. S: Suspends the specified operation. O: Report the message ID and the message text to the field engineer.

LPRM133E
PHYSICAL IP n ONLINE FAILED: UNEXPECTED STATE AT CPU RESET.
Onlining of the physical IP n has failed because an unexpected state was detected at the CPU reset processing on this physical IP. S: Suspends the specified operation. O: Report the message ID and the message text to the field engineer.

LPRM134E
PHYSICAL IP n ONLINE FAILED: CPU RESET PROCESSING TIMEOUT.
Onlining of the physical IP n has failed because the CPU reset processing did not complete within the system-defined time. S: Suspends the specified operation. O: Report the message ID and the message text to the field engineer.

LPRM135E
PHYSICAL IP n ONLINE FAILED: UNEXPECTED STATE DURING SET PREFIX.
Onlining of the physical IP n has failed because an unexpected state was detected at the set prefix processing on this physical IP. S: Suspends the specified operation. O: Report the message ID and the message text to the field engineer.

LPRM136E
PHYSICAL IP n ONLINE FAILED: SET PREFIX PROCESSING TIMEOUT.
Onlining of the physical IP n has failed because the set prefix processing did not complete within the system-defined time. S: Suspends the specified operation. O: Report the message ID and the message text to the field engineer.

© COMPAREX Informationssysteme GmbH

LPRM137E
PHYSICAL IP n ONLINE FAILED: UNEXPECTED STATE AT CPU START.
Onlining of the physical IP n has failed because the set prefix processing did not complete within the system-defined time. S: Suspends the specified operation. O: Report the message ID and the message text to the field engineer.

LPRM138E
PHYSICAL IP n ONLINE FAILED: CPU START PROCESSING TIMEOUT.
Onlining of the physical IP n has failed because the CPU start processing on this physical IP did not complete within the system-defined time. S: Suspends the specified operation. O: Report the message ID and the message text to the field engineer.

LPRM139E
PHYSICAL IP n ONLINE CANCELLED: IP ALREADY ONLINE.
Onlining of the physical IP n has been cancelled because it is already onlined. S: Suspends the specified operation. O: Confirm the status of the physical IP.

LPRM140E
PHYSICAL IP n ONLINE FAILED: IP FAILURE.
Onlining of the physical IP n has failed because it is faulty. S: Suspends the specified operation. O: Enter "SYSTEM IP,OFFLINE" command and retry the onlining operation.

LPRM141E
PHYSICAL IP n ONLINE FAILED: NOT SUPPORTED IN HARDWARE.
Onlining of the physical IP n has failed because of the lack of necessary hardware support. S: Suspends the specified operation. O: No action.

LPRM143E
PHYSICAL IP n OFFLINE FAILED: CPU STOP PROCESSING TIMEOUT.
Offlining of the physical IP n has failed because the CPU stop processing on this physical IP did not complete within the system-defined time. S: Suspends the specified operation. O: Report the message ID and the message text to the field engineer.

LPRM144E
PHYSICAL IP n OFFLINE FAILED: UNEXPECTED STATE AT CPU RESET.
Offlining of the physical IP n has failed because an unexpected state was detected at the CPU reset processing on this physical IP. S: Suspends the specified operation. O: Report the message ID and the message text to the field engineer.

© COMPAREX Informationssysteme GmbH

LPRM146E
PHYSICAL IP n OFFLINE FAILED: UNEXPECTED CODE=|response code xxxx|.
Offlining of the physical IP n has failed because of the given unexpected response code. S: Suspends the specified operation. O: Report the message ID and the message text to the field engineer.

LPRM147E
PHYSICAL IP n OFFLINE CANCELLED: IP ALREADY OFFLINE.
Offlining of the physical IP n has been cancelled because it is already offlined. S: Suspends the specified operation. O: Confirm the status of the physical IP.

LPRL150E
PHYSICAL IP n DISABLED WAIT STATE. CALL LPRLOG FRAME TO REFER THE DETAIL.
The physical IP n has entered a disabled wait because of a hardware failure. See the LPRLOG frame for details. S: Continues processing. O: Follow guidance on the LPRLOG frame.

LPRL151I
MLPF-DUMP PROCESSING CANCELLED: DUMP ALREADY IN PROGRESS.
MLPF-dump processing has been cancelled because another dump process has been started. S: Suspends the dump processing. O: No action.

LPRL152E
MLPF-DUMP PROCESSING CANCELLED: DUMP INIT FAILURE.
MLPF-dump processing has been cancelled because of a failure in setting up the necessary environment. S: Suspends the dump processing. O: No action.

LPRL153E
MLPF-DUMP PROCESSING ABENDED: ACCESS ERROR TO SVP FILE.
MLPF-dump processing has abended because of an error in accessing the SVP file. S: Suspends the dump processing. O: Report the message ID and the message text to the field engineer.

LPRL154E
MLPF-DUMP PROCESSING FAILED: INVALID DATA FOUND.
MLPF-dump processing has failed because of invalid data residing in MLPF. S: Suspends the dump processing. O: Report the message ID and the message text to the field engineer.

LPRL160E
PHYSICAL IP n CHECK-STOPPED. CALL LPRLOG FOR DETAILS.
The physical IP n has been check-stopped because of a hardware failure. See the LPRLOG frame for details. S: Continues processing through graceful degradation. O: Follow guidance on the LPRLOG frame.

© COMPAREX Informationssysteme GmbH

LPRL161I
PHYSICAL IP n RECEIVED INVALID MALFUNCTION ALERT.
The physical IP n has received an invalid malfunction alert from the processor hardware. S: Continues processing, ignoring the alert. O: Report the message ID and the message text to the field engineer.

LPRL162I
PHYSICAL IP n RECEIVED INVALID EMERGENCY SIGNAL.
The physical IP n has received an invalid emergency signal from the processor hardware. S: Continues processing, ignoring the alert. O: Report the message ID and the message text to the field engineer.

LPRL163I
INTCF ON PHYSICAL IP n DEINSTALLED BY DYNAMIC IP ALTERNATION.
IntCF (Integrated Coupling Facility) on the physical IP n has been deinstalled with dynamic IP alternation. S: Disconnects the target physical IP and makes it unavailable on LPAR frames. O: No action.

LPRL164I
ICF ON PHYSICAL IP n DISABLED BY DYNAMIC IP ALTERNATION.
ICF (Integrated Cryptographic Facility) on the physical IP n has been disabled with dynamic IP alternation. S: Continues processing. O: No action.

LPRL165I
PHYSICAL IP x NOW AVAILABLE TO SYSTEM.
As a result of concurrent IP upgrade, physical IP x has been made available to the system and information relating to physical IP x has been added in applicable LPAR frames. S: Adds information relating to physical IP x in applicable LPAR frames. O: Confirm the addition of information relating to physical IP x on applicable LPAR frames.

LPRL166I
ATTEMPT TO ADD PHYSICAL IP x FAILED.
As a result of concurrent IP upgrade in vain, an attempt to add physical IP x to the system has failed. S: No action. O: Report the message ID and the message text to the field engineer.

LPRL167I
PHYSICAL IP x NOW DELETED FROM SYSTEM.
As a result of concurrent IP downgrade or dynamic IP alternation, physical IP x has been deleted from the system and information relating to physical IP x has been deleted from applicable LPAR frames. S: Deletes information relating to physical IP x from applicable LPAR frames. O: Confirm the deletion of information relating to physical IP x on applicable LPAR frames.

© COMPAREX Informationssysteme GmbH

LPRL170E
[GROUPx]CHPID nn CHECK-STOPPED: CHANNEL PATH FAILURE.
The CHPID nn [of Group x] has been check-stopped because of a channel path failure. An LPAR Group number is indicated only on a processor model operating in 2-IOCDS mode. S: Continues processing. O: Report the message ID and the message text to the field engineer.

LPRM180I
PATCH COMMAND IN PROCESS. WAIT 5 MINUTES.
Execution of an online patch command is in progress. The operator is requested to wait for five minutes. S: Continues processing, ignoring the specified operation. O: Retry the ignored operation after the message disappears.

LPRM182W
HYPERVISOR TASK (|task ID xxxx|) ERROR: TASK NOT READY.
The Hypervisor task having the task ID given by the message text is not placed in the ready state. S: Continues processing, ignoring the specified operation. O: Report the message ID and the message text to the field engineer.

LPRM183W
[GROUPx]LPARmm DOES NOT ENTER QUIESCE STATE.
[LPAR Group x] LPAR mm does not enter the quiesced state. An LPAR Group number is indicated only on a processor model operating in 2-IOCDS mode. S: Continues processing, ignoring the specified operation. O: Enter the Quiesce command from the OS running on [LPAR Group x] LPAR mm, and then retry the ignored operation.

LPRM184I
SERVICE TIME PROCESSING RESTARTED.
The service time processing, once disrupted, has been successfully restarted. S: Continues processing. O: No action.

LPRM192E
ABNORMAL CONDITION DETECTED ON [GROUPx]LPARmm.
An unexpected abnormal condition has been detected on LPAR mm [of Group x]. An LPAR Group number is indicated only on a processor model operating in 2-IOCDS mode. S: Continues processing. O: Report the message ID and the message text to the field engineer.

LPRM193I
DEACT WITH FORCE OPERAND ENDED NORMALLY.
The Deact command with Force operand on the specified LPAR has ended normally. S: Continues processing. O: No action.

© COMPAREX Informationssysteme GmbH

LPRM194E
DEACT WITH FORCE OPERAND ABENDED.
The Deact command with Force operand on the specified LPAR has abended. S: Suspends the specified operation. O: No action.

LPRM195S
DEACT WITH FORCE OPERAND REJECTED: LPAR IS NOT CHECK-STOPPED.
The Deact command with Force operand has been rejected because the specified LPAR is not check-stopped. S: Suspends the specified operation. O: Retry the suspended operation on a check-stopped LPAR.

LPRM196E
DEACT WITH FORCE OPERAND REJECTED: RESOURCE TASK IS BUSY.
The Deact command with Force operand has been rejected because the resource control routine is busy in processing the ongoing process. S: Suspends the specified operation. O: Reenter the rejected command.

LPRL200E
IPL FAILED DUE TO UNEXPECTED DEVICE CONDITION. CC=|condition code|
LPAR IPL on LOAD or AUTO LOAD has failed due to an invalid CC factor in the loading device: • CC=l: Occurrence of a CC=l factor at device initiation. • CC=2: Occurrence of a CC=2 factor at device initiation. • CC=3: Device not assigned or not usable. S: Suspends the IPL. O: Change the loading device number and retry the load operation.

LPRL201E
IPL FAILED DUE TO UNEXPECTED DEVICE STATUS. DSB/SSB=|status code|
LPAR IPL on LOAD or AUTO LOAD has failed due to an invalid DSB/SSB factor in the loading device. S: Suspends the IPL. O: Reset the status of the loading device given in the status code or change the loading device number, and retry the load operation.

LPRL202W
IPL FAILED DUE TO UNASSIGNED DEVICE. DEV=|device number|.
LPAR IPL has failed because the specified loading device number does not exist. S: Suspends the IPL. O: Change the loading device number on SLPOP frame or assign the loading device after changing the SCDS contents, and retry the IPL operation.

LPRL203E
IPL FAILED DUE TO LOGICAL IP OFFLINE. IP=|IP number|
LPAR IPL has failed because the specified logical IP is in an offline state. S: Suspends the IPL. O: Change the logical IP number or re-activate (ACTIVATE after DEACTIVATE) the LPAR, and retry the IPL operation.

© COMPAREX Informationssysteme GmbH

LPRL204E
IPL FAILED: I/O INTERRUPT TIMEOUT ON IPL DEVICE. DEV=|device number xxxx|.
LPAR IPL has failed because of an I/O interrupt timeout detected on the IPL device. S: Suspends the IPL. O: Retry the IPL operation.

LPRL207I
SELECTED LPAR IS INACTIVE.
The selected LPAR is inactive. S: Continues processing. O: No action.

LPRL208E
ACTIVATION FAILED DUE TO DUPLICATED DEVICE NUMBER. DEV=|device number|
LPAR activation has failed because the same device number shown by the operand of “DEV=” is specified for multiple devices per LPAR. S: Suspends the LPAR activation. O: Reenter a correct device number for each device and retry the LPAR activation.

LPRL209E
DEACTIVATION FAILED DUE TO ADMF SCH NOT QUIESCE. SCH=|subchannel number|
LPAR deactivation has failed because the ADMF subchannel shown by the operand of “SCH=” is not yet quiesced. S: Suspends the LPAR deactivation. O: Stop the system program running on the target LPAR and retry the LPAR deactivation.

LPRL210A
MS RELOCATION IN PROCESS. TRY LATER.
The MVSTOR or DEACT command is rejected because the previously-entered MVSTOR command is in process. S: Suspends the second MVSTOR command or the DEACT command. O: Wait for the completion of the ongoing command execution and reenter the rejected command.

LPRL211E
COMMAND REJECTED DUE TO INCORRECT PARAMETER. RC=|reason code|
The MVSTOR command is rejected on a parameter error shown by the reason code as follows: • 0074: Invalid MS origin parameter. • 0089: No higher free area against UP operand. • 008B: MS origin already 0 against DOWN operand. • 00CB: No lower free area against DOWN operand. • 00F4: Invalid or deactivated LPAR specified. • 00F5: MS origin parameter specified in the same as current MS origin. • 00F9: MS origin parameter specified on an invalid boundary. • 00FA: MS capacity is not enough for command execution. S: Suspends the specified operation. O: Retry the suspended operation with a correct parameter.

© COMPAREX Informationssysteme GmbH

LPRL221S
COMMAND REJECTED: LIP n ALREADY ONLINE TO [GROUP x]LPARmm.
The specified onlining command for the logical IP (LIP) n is rejected because the LIP is already online to [Group x] LPAR mm. An LPAR Group number is indicated only on a processor model operating in 2-IOCDS mode. S: Suspends the specified operation. O: Confirm the LIP status on the LPRIPA frame.

LPRL222S
COMMAND REJECTED: LIP n ALREADY OFFLINE FOR [GROUP x]LPARmm.
The specified offlining command for the logical IP (LIP) n is rejected because the LIP is already offline for [Group x] LPAR mm. An LPAR Group number is indicated only on a processor model operating in 2-IOCDS mode. S: Suspends the specified operation. O: Confirm the LIP status on the LPRIPA frame.

LPRL223S
COMMAND REJECTED: LIP n NOT DEFINED TO [GROUP x]LPARmm.
The specified onlining or offlining command for the logical IP (LIP) n is rejected because the LIP is not defined to [Group x] LPAR mm. An LPAR Group number is indicated only on a processor model operating in 2-IOCDS mode. S: Suspends the specified operation. O: Confirm the LIP status on the LPRIPA frame.

LPRL224S
COMMAND REJECTED: LIP n IS LAST ONLINE LIP IN [GROUP x]LPARmm.
The specified offlining command for the logical IP (LIP) n is rejected because it is the last online LIP (minimum requirement) in [Group x] LPAR mm. An LPAR Group number is indicated only on a processor model operating in 2-IOCDS mode. S: Suspends the specified operation. O: Confirm the LIP status on the LPRIPA frame.

LPRL225E
[GROUPx]LPARmm LIPn ONLINE FAILED: LIP IS CHECK-STOPPED.
Onlining of the logical IP (LIP) n of [Group x] LPAR mm has failed because it is check-stopped. An LPAR Group number is indicated only on a processor model operating in 2-IOCDS mode. S: Places the target LIP into a check-stopped state. O: Report the message ID and the message text to the field engineer.

LPRL226E
[GROUPx]LPARmm LIPn OFFLINE FAILED: LIP IS CHECK-STOPPED.
Offlining of the logical IP (LIP) n of [Group x] LPAR mm has failed because it is check-stopped. An LPAR Group number is indicated only on a processor model operating in 2-IOCDS mode. S: Places the target LIP into a check-stopped state. O: Report the message ID and the message text to the field engineer.

© COMPAREX Informationssysteme GmbH

LPRL227E
[GROUPx]LPARmm LIPn RESET FAILED: LIP IS CHECK-STOPPED.
Resetting of the logical IP (LIP) n of [Group x] LPAR mm has failed because it is check-stopped. An LPAR Group number is indicated only on a processor model operating in 2-IOCDS mode. S: Places the target LIP into a check-stopped state. O: Report the message ID and the message text to the field engineer.

LPRL228E
[GROUPx]LPARmm LIPn FAILED: COMMUNICATION ERROR IN HYPERVISOR.
The ongoing operation on the logical IP (LIP) n of [Group x] LPAR mm has failed on the occurrence of an internal communication error in MLPF Hypervisor. An LPAR Group number is indicated only on a processor model operating in 2-IOCDS mode. S: Places the target LIP into a check-stopped state. O: Report the message ID and the message text to the field engineer.

LPRL229E
[GROUPx]LPARmm LIPn FAILED AT HYPERVISOR CODE=|code xxxx|.
The ongoing operation on the logical IP (LIP) n of [Group x] LPAR mm has failed because of an unexpected condition that cannot be handled at the given code of MLPF Hypervisor. An LPAR Group number is indicated only on a processor model operating in 2-IOCDS mode. S: Places the target LIP into a check-stopped state. O: Report the message ID and the message text to the field engineer.

LPRL230E
[GROUPx]LPARmm MS CLEAR FAILED. ADDR=|address xxxxxxxx|.
MS clear processing during activation, deactivation or clear reset for LPAR mm [of Group x] has failed at the given address. An LPAR Group number is indicated only on a processor model operating in 2-IOCDS mode. S: Suspends the specified operation. O: Report the message ID and the message text to the field engineer.

LPRL231E
I/O SUBSYSTEM RESET FAILED: DEVICE INITIALIZATION FAILURE. DEV=|device number xxxx|.
I/O subsystem reset processing has failed because of a device initialization failure at the indicated device number. S: Suspends the specified operation. O: Retry the suspended operation.

LPRL232E
I/O SUBSYSTEM RESET FAILED:CRW REPORT TIMEOUT. PATH=|CHPID xx|.
I/O subsystem reset processing has failed because of a CRW report timeout at the indicated channel path ID. S: Suspends the specified operation. O: Retry the suspended operation.

LPRL233E
[GROUPx]LPAR mm I/O SUBSYSTEM WAIT TIMEOUT. DEV=|device number xxxx|.
In order to reconfigure MS, [LPAR Group x] LPAR mm was waiting for the completion of all the I/O devices' operations but a timeout was detected; consequently, the MS reconfiguration operation was suspended. An LPAR Group number is indicated only on a processor model operating in 2-IOCDS mode. S: Suspends the specified operation. O: Retry the suspended operation.

© COMPAREX Informationssysteme GmbH

LPRL234E
I/O SUBSYSTEM RESET FAILED: TIMEOUT ON DEVICES. COUNT=xxx.
The I/O subsystem reset operation has failed on the given number of devices because of an I/O interrupt time-out. See the LPRSSR frame for specific device addresses or device numbers. S: Suspends the specified operation. O: Retry the suspended operation. If it fails again, inspect the device addresses or device numbers on the LPRSSR frame and consult the field engineer.

LPRL235E
I/O SUBSYSTEM RESET FAILED: TIMEOUT ON CHPS. COUNT=xxx.
The I/O subsystem reset operation has failed on the given number of channel paths because of a CRW report timeout. See the LPRSSR frame for specific channel path IDs. S: Suspends the specified operation. O: Retry the suspended operation. If it fails again, inspect the channel path IDs on the LPRSSR frame and consult the field engineer.

LPRL236W
DEVICE INITIALIZATION FAILED. DEV=xxxx, STATE=xxxxxxxx xxxxxxxx.
The specified channel onlining or offlining operation has encountered a device initialization failure at the addressed device in the indicated state. S: Suspends the specified operation. O: Retry the suspended operation. If it fails again, consult the field engineer.

LPRL239S
COMMAND REJECTED: NO ONLINE LOGICAL IP.
The specified command has been rejected because there is no target logical IP (online logical IP). S: Suspends the specified operation. O: Online a logical IP and retry the suspended operation.

LPRL240S
COMMAND REJECTED: LPAR ACTIVE.
The specified command has been rejected because the LPAR is in an activated status. S: Suspends the specified operation. O: Deactivate the LPAR and reenter the command.

LPRL241S
COMMAND REJECTED: LPAR INACTIVE.
The specified command has been rejected because the LPAR is in an deactivated status. S: Suspends the specified operation. O: Activate the LPAR and reenter the command.

LPRL242S
COMMAND REJECTED: LOGICAL IP OFFLINE.
The specified command has been rejected because the logical IP is in an offline state. S: Suspends the specified operation. O: Set the state of logical IP to online and reenter the command.

© COMPAREX Informationssysteme GmbH

LPRL243S
COMMAND REJECTED: LOGICAL IP CHECK-STOP.
The specified command has been rejected because the logical IP is in a check-stop state. S: Suspends the specified operation. O: Reset the logical IP check-stop state on the SLPOP frame and reenter the command.

LPRL244S
COMMAND REJECTED: LOGICAL IP NOT STOPPED.
The specified command has been rejected because the logical IP is not in a stop state. S: Suspends the specified operation. O: Stop the logical IP and reenter the command.

LPRL245S
INVALID ALTERNATE DATA IN PSW.
Alternate data in PSW is invalid. S: Suspends the specified operation. O: Reenter a correct alternate data in PSW and retry the suspended operation.

LPRL246S
INVALID ADDR (ADDRESSING EXCEPTION).
An addressing exception has been detected on the specified address. S: Suspends the specified operation. O: Reenter a correct address and retry the suspended operation.

LPRL247S
INVALID ADDR (TRANSLATION SPECIFICATION EXCEPTION).
A translation specification exception has been detected on the specified address. S: Suspends the specified operation. O: Reenter a correct address and retry the suspended operation.

LPRL248S
INVALID ADDR (PAGE TRANSLATION EXCEPTION).
A page translation exception has been detected on the specified address. S: Suspends the specified operation. O: Reenter a correct address and retry the suspended operation.

LPRL249S
INVALID ADDR (SEGMENT TRANSLATION EXCEPTION).
A segment translation exception has been detected on the specified address. S: Suspends the specified operation. O: Reenter a correct address and retry the suspended operation.

LPRL250S
INVALID ADDR (AR TRANSLATION EXCEPTION).
An AR (Access Register) translation exception has been detected on the specified address. S: Suspends the specified operation. O: Reenter a correct address and retry the suspended operation.

© COMPAREX Informationssysteme GmbH

LPRL254E
TMPLOAD FAILED: LOGICAL IP OFFLINE = (IPn).
Loading of MLPF-integrated TMP onto the logical IPn has failed because that logical IP has been placed in the offline status. S: Continues processing, ignoring the TMP loading operation. O: Let the field engineer retry the TMP loading operation after letting him/her specify a new logical IP among those placed in the online status, or after letting him/her place the offline logical IP into the online status.

LPRL255E
TMPLOAD FAILED: LOGICAL IP CHECK-STOPPED = (IPn).
Loading of MLPF-integrated TMP onto the logical IPn has failed because that logical IP has been placed in the check-stopped status. S: Continues processing, ignoring the TMP loading operation. O: Let the field engineer retry the TMP loading operation after letting him/her specify a new logical IP among those not check-stopped, or after letting him/her cancel the check-stopped status.

LPRL256E
TMPLOAD FAILED: SYSTEM NOT IN CE MODE.
Loading of MLPF-integrated TMP has failed because the system is not in CE mode. S: Continues processing, ignoring the TMP loading operation. O: Let the field engineer place the CE key into the CE position, and let him/her retry the TMP loading operation.

LPRL261E
CF INITIALIZATION FAILED: NO AVAILABLE LOGICAL IP.
HCCF initialization processing has failed because no logical IP available for such initialization processing is defined. S: Suspends the HCCF initialization. O: Deactivate the target LPAR and redefine the logical IP number. Then, activate the same LPAR and retry the HCCF initialization.

LPRL262E
CF INITIALIZATION FAILED: HARDWARE ERROR.
HCCF initialization processing has failed because of a hardware failure. S: Suspends the HCCF initialization. O: Report the message ID and the message text to the field engineer.

LPRL263I
CF DUMP COMPLETE FOR [GROUPx]LPARmm.
HCCF dump processing for the [LPAR Group x] LPAR mm has completed. An LPAR Group number is indicated only on a processor model operating in 2-IOCDS mode. S: Continues processing. O: Report the message ID and the message text to the field engineer. Then, act as instructed by the reference manual.

© COMPAREX Informationssysteme GmbH

LPRL264E

```
CF DUMP FAILED: RC=|reason code xxxx| FOR [GROUPx ]LPARmm.
```

HCCF dump processing for the [LPAR Group x] LPAR mm has failed and the reason is given by the reason code as follows. An LPAR Group number is indicated only on a processor model operating in 2-IOCDS mode.

- 0130: The dump request is rejected because the target file in the hard disk is busy.
- 0240: The dump processing started but encountered a hardware failure.

S: Suspends the dump processing and starts HCCF initialization processing.

O: Report the message ID and the message text to the field engineer.

LPRL266I

```
[GROUPx ]LPAR mm RECEIVED RESET AND RESTART ORDER.
```

The RESET AND RESTART order for re-initialization of HCCF on [LPAR Group x] LPAR mm has been received. An LPAR Group number is indicated only on a processor model operating in 2-IOCDS mode.

S: Performs re-initialization of HCCF for the subject LPAR.

O: Report the message ID and the message text to the field engineer.

LPRL268I

```
CF DUMP STARTED FOR [GROUPx ]LPARmm.
```

HCCF dump processing for the [LPAR Group x] LPAR mm has started. An LPAR Group number is indicated only on a processor model operating in 2-IOCDS mode.

S: Continues processing.

O: Report the message ID and the message text to the field engineer.

LPRL270E

```
[GROUPx ]LPARmm LIP n ENTERED CHECK-STOPPED STATE.
```

The logical IPn configured to the [LPAR Group x] LPAR mm has entered a check-stop state. An LPAR Group number is indicated only on a processor model operating in 2-IOCDS mode.

S: Continues processing.

O: Report the message ID and the message text to the field engineer. Also, reset the logical IP check-stop state on the SLPOP frame and retry the IPL.

LPRP271E

```
[GROUPx ]LPARmm LIP n ENTERED DISABLED WAIT.
PSW=|PSW contents xxxxxxxx xxxxxxxx|.
```

The logical IPn configured to the [LPAR Group x] LPAR mm has entered the disabled-wait state. An LPAR Group number is indicated only on a processor model operating in 2-IOCDS mode.

S: Continues processing.

O: Re-IPL the OS on the corresponding LPAR.

LPRL272E

```
[GROUPx ]LPARmm LIP n ENTERED STOPPED STATE.
```

The logical IPn configured to the [LPAR Group x] LPAR mm has been forced into a stopped state because the OS on that LPAR encountered a format error in the interruption new PSW. If this message occurred during IPL the most probable reason is that the IPL device contains an IPL Bootstrap Record 1 with an invalid IPL PSW. An LPAR Group number is indicated only on a processor model operating in 2-IOCDS mode.

S: Continues processing.

O: See if the IPL device is correct, and re-IPL the OS on the corresponding LPAR.

© COMPAREX Informationssysteme GmbH

LPRP273I

```
[GROUPx ]LPARmm LIP n RATE-STOPPED. PSW=|PSW contents xxxxxxxx xxxxxxxx|.
```

The logical IPn configured to the [LPAR Group x] LPAR mm has entered the rate-stop state. An LPAR Group number is indicated only on a processor model operating in 2-IOCDS mode.

S: Continues processing.

O: No action.

LPRL274I

```
[GROUPx ]LPARmm LIP n COMPARE-STOPPED. PSW=|PSW contents xxxxxxxx xxxxxxxx|.
```

The logical IPn configured to the [LPAR Group x] LPAR mm has entered the compare-stop state. An LPAR Group number is indicated only on a processor model operating in 2-IOCDS mode.

S: Continues processing.

O: No action.

LPRL275I

```
SIGP: [GROUPx ]LPARmm LIP n RECEIVED CPU-RESET ORDER.
```

The logical IPn configured to the [LPAR Group x] LPAR mm has received the CPU-reset order of the SIGP instruction. An LPAR Group number is indicated only on a processor model operating in 2-IOCDS mode.

S: Executes the CPU-reset processing to the subject logical IP.

O: If the OS on the corresponding LPAR has given any relevant message, follow the instruction of the OS message. If there is no such OS message and the LPAR is running normally, this MLPF message is a result of normal SIGP instruction processing and requires no action.

LPRL276I

```
SIGP: [GROUPx ]LPARmm LIP n RECEIVED INITIAL-CPU-RESET ORDER.
```

The logical IPn configured to the [LPAR Group x] LPAR mm has received the initial-CPU-reset order of the SIGP instruction. An LPAR Group number is indicated only on a processor model operating in 2-IOCDS mode.

S: Executes the initial-CPU-reset processing to the subject logical IP.

O: The same action as for the message LPRL275I.

LPRL277I

```
SIGP: [GROUPx ]LPARmm LIP n RECEIVED PROGRAM-RESET ORDER.
```

The logical IPn configured to the [LPAR Group x] LPAR mm has received the program-reset order of the SIGP instruction. An LPAR Group number is indicated only on a processor model operating in 2-IOCDS mode.

S: Executes the program-reset processing to the subject logical IP.

O: The same action as for the message LPRL275I.

LPRL278I

```
SIGP: [GROUPx ]LPARmm LIP n RECEIVED INITIAL-PROGRAM-RESET ORDER.
```

The logical IPn configured to the [LPAR Group x] LPAR mm has received the initial-program-reset order of the SIGP instruction. An LPAR Group number is indicated only on a processor model operating in 2-IOCDS mode.

S: Executes the initial-program-reset processing to the subject logical IP.

O: The same action as for the message LPRL275I.

LPRL279I

```
SIGP: [GROUPx ]LPARmm LIP n RECEIVED STOP ORDER.
```

The logical IPn configured to the [LPAR Group x] LPAR mm has received the stop order of the SIGP instruction. An LPAR Group number is indicated only on a processor model operating in 2-IOCDS mode.

S: Places the subject logical IP into a stop state.

O: The same action as for the message LPRL275I.

© COMPAREX Informationssysteme GmbH

LPRL280E

[GROUPx]LPARmm ENTERED SYSTEM CHECK STOP. RC=|reason code xxxx|.

LPAR mm [of Group x] has entered a system check stop due to the reason code shown below. An LPAR Group number is indicated only on a processor model operating in 2-IOCDS mode.

- 0001: A non-recoverable failure occurred while LPAR mm was holding a lock.

S: Makes LPAR mm [of Group x] inoperative.

O: Report the message ID and the message text to the field engineer. Also, apply a clear reset and re-IPL on LPAR mm [of Group x].

LPRL282I

[GROUPx]LPARmm MS EID n NOW OFFLINE.

Placing the main storage area of EID n of [LPAR Group x] LPAR mm into offline status was successful. An LPAR Group number is indicated only on a processor model operating in 2-IOCDS mode.

S: Continues processing.

O: No action.

LPRL283I

[GROUPx]LPARmm MS EID n NOW ONLINE.

Placing the main storage area of EID n of [LPAR Group x] LPAR mm into online status was successful. An LPAR Group number is indicated only on a processor model operating in 2-IOCDS mode.

S: Continues processing.

O: No action.

LPRL284I

[GROUPx]LPARmm ES EID n NOW OFFLINE.

Placing the expanded storage area of EID n of [LPAR Group x] LPAR mm into offline status was successful. An LPAR Group number is indicated only on a processor model operating in 2-IOCDS mode.

S: Continues processing.

O: No action.

LPRL285I

[GROUPx]LPARmm ES EID n NOW ONLINE.

Placing the expanded storage area of EID n of [LPAR Group x] LPAR mm into online status was successful. An LPAR Group number is indicated only on a processor model operating in 2-IOCDS mode.

S: Continues processing.

O: No action.

LPRL286I

[GROUPx]LPARmm LIP n NOW OFFLINE.

Placing the logical IP n configured to the [LPAR Group x] LPAR mm into offline status was successful. An LPAR Group number is indicated only on a processor model operating in 2-IOCDS mode.

S: Continues processing.

O: No action.

LPRL287I

[GROUPx]LPARmm LIP n NOW ONLINE.

Placing the logical IP n configured to the [LPAR Group x] LPAR mm into online status was successful. An LPAR Group number is indicated only on a processor model operating in 2-IOCDS mode.

S: Continues processing.

O: No action.

© COMPAREX Informationssysteme GmbH

LPRL288I
[GROUPx]LPARmm CHPID nn NOW ONLINE.
Placing the CHPID nn configured to the [LPAR Group x] LPAR mm into online status was successful. An LPAR Group number is indicated only on a processor model operating in 2-IOCDS mode. S: Continues processing. O: No action.

LPRL289I
[GROUPx]LPARmm CHPID nn NOW OFFLINE.
Placing the CHPID nn configured to the [LPAR Group x] LPAR mm into offline status was successful. An LPAR Group number is indicated only on a processor model operating in 2-IOCDS mode. S: Continues processing. O: No action.

LPRL290E
[GROUPx]LPARmm NOT AUTHORIZED FOR RECONFIGURATION.
Dynamic LPAR Reconfiguration is not authorized to the [LPAR Group x] LPAR mm. An LPAR Group number is indicated only on a processor model operating in 2-IOCDS mode. S: Continues processing. O: Change the Dynamic LPAR Reconfiguration setting on the LPRCTL frame and reenter the command.

LPRL291E
[GROUPx]LPARmm MISMATCH IN RECONFIGURATION AUTHORIZATION DATA.
The Authorization parameter for LPAR Reconfiguration does not match the target LPAR. An LPAR Group number is indicated only on a processor model operating in 2-IOCDS mode. S: Continues processing. O: If the OS on the corresponding LPAR has given any relevant message, follow the instruction of the OS message. If there is no such OS message and the LPAR is running normally, this MLPF message is a result of normal Service Call instruction processing and requires no action.

LPRL292I
[GROUPx]LPARmm SYSTEM RESET COMPLETE.
The system reset operation for the specified LPAR has been completed. An LPAR Group number is indicated only on a processor model operating in 2-IOCDS mode. S: Continues processing. O: No action.

LPRL293I
[GROUPx]LPARmm DEACTIVATION COMPLETE.
The deactivation operation for the specified LPAR has been completed. An LPAR Group number is indicated only on a processor model operating in 2-IOCDS mode. S: Continues processing. O: No action.

LPRP294U
[GROUPx]LPARmm LIP n HAS ABENDED (AC=|abend code xxxx|). DUMP WAS TAKEN.
The logical IPn configured to the [LPAR Group x] LPAR mm has abended. The abend code represents the failure contents as detailed in chapter 9. An LPAR Group number is indicated only on a processor model operating in 2-IOCDS mode. S: Unable to recover. O: Report the abend code to the field engineer.

© COMPAREX Informationssysteme GmbH

LPRL295I
[GROUPx]LPARmm DYNAMIC I/O RECONFIGURATION STARTED.
The [LPAR Group x] LPAR mm has started DRM processing. An LPAR Group number is indicated only on a processor model operating in 2-IOCDS mode. S: Continues processing. O: No action.

LPRL296I
[GROUPx]LPARmm DYNAMIC I/O RECONFIGURATION COMPLETE.
The [LPAR Group x] LPAR mm has ended DRM processing. An LPAR Group number is indicated only on a processor model operating in 2-IOCDS mode. S: Continues processing. O: No action.

LPRL297I
[GROUPx]LPAR mm COMMAND REJECT: DYNAMIC I/O RECONFIGURATION IN PROCESS.
The command issued to the [LPAR Group x] LPAR mm is rejected because DRM processing is in progress. An LPAR Group number is indicated only on a processor model operating in 2-IOCDS mode. S: Suspends the specified operation. O: Retry the specified operation after completion of the ongoing DRM processing.

LPRL298I
SCP-INITIATED RESET (I/O INTERFACE RESET) OCCURRED ON [GROUPx]LPARmm.
An SCP-initiated reset (or sometimes called I/O interface reset) has occurred on LPAR mm [of Group x]. An LPAR Group number is indicated only on a processor model operating in 2-IOCDS mode. S: Continues processing. O: No action.

LPRL299E
[GROUPx]LPARmm CHECK-STOPPED: ALL ALLOCATED LIPS INOPERABLE.
LPAR mm [of Group x] has entered a check-stopped state because all the allocated logical IPs (LIPs) have been turned inoperable. An LPAR Group number is indicated only on a processor model operating in 2-IOCDS mode. S: Places the target LPAR into a check-stopped state. O: Report the message ID and the message text to the field engineer.

LPRL300I
[GROUPx]LPARmm HIGH-PRIORITY MSG FROM SCP. CALL SLPMSG FOR DETAILS.
The operator is requested to call the SLPMSG frame because a high-priority message has arrived from an SCP running on [LPAR Group x] LPAR mm. An LPAR Group number is indicated only on a processor model operating in 2-IOCDS mode. S: Continues processing. O: Follow guidance on the SLPMSG frame.

LPRL301I
[GROUPx]LPARmm LOW-PRIORITY MSG FROM SCP. CALL SLPMSG FOR DETAILS.
The operator is requested to call the SLPMSG frame because a low-priority message has arrived from an SCP running on [LPAR Group x] LPAR mm. An LPAR Group number is indicated only on a processor model operating in 2-IOCDS mode. S: Continues processing. O: Follow guidance on the SLPMSG frame.

© COMPAREX Informationssysteme GmbH

LPRL302I
SCP MESSAGE FILES FULL. USE SLPMSG TO VIEW AND DELETE MESSAGES.
The operator message files have been filled up. The operator is suggested to call the SLPMSG frame for viewing and deleting messages. S: Continues processing. O: Specify display or deletion of messages on the SLPMSG frame.

LPRL303A
SCP COMMAND LOST: STACK OVER FLOW
An SCP command entered on the SLPMSG frame has been lost and unable to reach the SCP because of a stack overflow. S: Cancels the command. O: Reenter the SCP command.

LPRL311E
ACTIVATION ERROR: CANNOT ASSIGN PHYSICAL RESOURCE.
LPAR activation has failed because of an error in assigning a physical resource. S: Suspends the LPAR activation. O: Reenter correct input parameters and retry the LPAR activation.

LPRL312E
ACTIVATION ERROR: MACROINSTRUCTION FAILED IN RESOURCE MANAGER.
LPAR activation has failed because of an error detected while executing macroinstruction in resource manager. S: Suspends the LPAR activation. O: Reenter correct input parameters and retry the LPAR activation.

LPRL313E
ACTIVATION ERROR: INVALID LIP COUNT (0 OR MORE THAN MAXIMUM).
LPAR activation has failed because no logical IP is defined, or the specified logical IP count is greater than the maximum allowable count of a 370-mode LPAR. The latter condition is not applicable to a processor model running under MLPF 3.5.0. S: Suspends the LPAR activation. O: Reenter correct input parameters and retry the LPAR activation.

LPRL314E
ACTIVATION ERROR: MS SIZE NOT DEFINED.
LPAR activation has failed because MS size is not defined. S: Suspends the LPAR activation. O: Reenter correct input parameters and retry the LPAR activation.

LPRL315E
ACTIVATION ERROR: MS ALLOCATION WITHOUT MS ORIGIN HAS FAILED.
LPAR activation has failed because allocation of the specified MS size without storage origin has failed. S: Suspends the LPAR activation. O: Reenter correct input parameters and retry the LPAR activation.

© COMPAREX Informationssysteme GmbH

LPRL316E
ACTIVATION ERROR: MS ALLOCATION WITH MS ORIGIN HAS FAILED.
LPAR activation has failed because allocation of the specified MS size with storage origin has failed. S: Suspends the LPAR activation. O: Reenter correct input parameters and retry the LPAR activation.

LPRL317E
ACTIVATION ERROR: NO CHANNEL PATH DEFINED.
LPAR activation has failed because no channel path is defined. S: Suspends the LPAR activation. O: Reenter correct input parameters and retry the LPAR activation.

LPRL319E
ACTIVATION ERROR: CANNOT RESERVE MS WORK AREA FOR LPAR ACTIVATION.
LPAR activation has failed because MS work area necessary for LPAR activation cannot be reserved with the specified input parameters. S: Suspends the LPAR activation. O: Reenter correct input parameters and retry the LPAR activation.

LPRL320E
ACTIVATION ERROR: CRYPTOGRAPHIC DOMAIN INDEX# NOT UNIQUELY DEFINED.
LPAR activation has failed because the same Cryptographic Domain Index number is specified twice or more. This message only applies to a processor model on which an Integrated Cryptographic Facility is installed. S: Suspends the LPAR activation. O: Reenter correct input parameters and retry the LPAR activation.

LPRL321E
ACTIVATION ERROR: VER/SER# NOT UNIQUELY DEFINED.
LPAR activation has failed because the same VER/SER# is specified for multiple LPARs on the LPRDEF frame. S: Suspends the LPAR activation. O: Reenter correct input parameters and retry the LPAR activation.

LPRL322E
ACTIVATION ERROR: ACTIVATED HCF LPAR COUNT IS ALREADY AT MAXIMUM.
LPAR activation has failed because the specified number of HCCF-LPARs is greater than the upper limit (two). S: Suspends the LPAR activation. O: Reenter correct input parameters and retry the LPAR activation.

LPRL323E
ACTIVATION ERROR: AT LEAST 8MB MS IS NECESSARY ON HCF LPAR.
HCCF-LPAR activation has failed because the specified MS size is smaller than the lower limit (eight megabytes). S: Suspends the LPAR activation. O: Reenter correct input parameters and retry the LPAR activation.

LPRL325E
ACTIVATION ERROR: NO CFR CHANNEL PATH DEFINED.
LPAR activation has failed because no CFR channel path is defined. S: Suspends the LPAR activation. O: Reenter correct input parameters and retry the LPAR activation.

© COMPAREX Informationssysteme GmbH

LPRL327E
ACTIVATION ERROR: ES ALLOCATION WITHOUT ES ORIGIN HAS FAILED.
LPAR activation has failed because allocation of the specified ES size without storage origin has failed. S: Suspends the LPAR activation. O: Reenter correct input parameters and retry the LPAR activation.

LPRL328E
ACTIVATION ERROR: ES ALLOCATION WITH ES ORIGIN HAS FAILED.
LPAR activation has failed because allocation of the specified ES size with storage origin has failed. S: Suspends the LPAR activation. O: Reenter correct input parameters and retry the LPAR activation.

LPRL329W
CHANNEL TYPE MISMATCH: CHANNEL PATHS OFFLINE. COUNT=xxx.
LPAR activation has completed but resulting configuration includes one or more offline channel paths caused by a channel type mismatch. The number of such channel paths is xxx. S: Continues processing. O: See CCHCNF and CHPSTS frames for problem determination, and consult the field engineer for solution.

LPRL330W
CHANNEL FAILURE: CHANNEL PATHS OFFLINE. COUNT=xxx.
LPAR activation has completed but resulting configuration includes one or more offline channel paths caused by a channel failure. The number of such channel paths is xxx. S: Continues processing. O: See CCHCNF and CHPSTS frames for problem determination, and consult the field engineer for solution.

LPRL331W
LIP ALLOCATED TO PIP WHICH HAS TIME MACHINE FEATURE ENABLED.
A physical IP to which Time Machine Facility is enabled is targeted for allocation. This message only applies to a processor model on which Time Machine is available. S: Continues processing. O: Disable Time Machine Facility on the target physical IP. A degradation of LPAR performance may occur.

LPRL332E
ACTIVATION ERROR: TIME MACHINE SERVICE CODE NOT AVAILABLE.
Activation of Time Machine LPAR or Time Warp LPAR has ended up in an error because Service Code (special code for processing of Time Machine) has not been loaded. This message only applies to a processor model on which Time Machine is available. S: Suspends the LPAR activation processing. O: Have the field engineer load Service Code. Then, retry the activation processing.

LPRL333W
LIP ALLOCATED TO PIP WHICH HAS TIME MACHINE FEATURE DISABLED.
A physical IP to which Time Machine Facility is disabled is targeted for allocation. This message only applies to a processor model on which Time Machine is available. S: Continues processing. O: Enable Time Machine Facility on the target physical IP. An incorrect tracing by Time Machine Facility may occur.

© COMPAREX Informationssysteme GmbH

LPRL334W
TIME MACHINE INITIALIZATION FAILED: SERVICE CODE ERROR.
Initialization of Service Code (special code for processing of Time Machine) has failed. This message only applies to a processor model on which Time Machine is available. S: Continues processing of LPAR activation. O: Report the message ID and the message text to the field engineer.

LPRL335W
ACTIVATION COMPLETED WITH WARNINGS. CALL LPRSSR FOR DETAILS.
LPAR activation process has ended with a warning-level message. See the LPRSSR frame for the contents of the warning-level message. S: Continues processing. O: See the LPRSSR frame for the contents of the warning-level message.

LPRL336E
ACTIVATION ERROR: NON-ZERO MS/ES DEFINED TO DUMMY-MODE LPAR.
LPAR activation has failed because other than 0 is defined to the MSE, MSR, ESE, or ESR setting of the dummy-mode LPAR. S: Continues processing. O: Retry the activation operation with a correct parameter.

LPRM337W
AUTOMATIC IP ONLINE PROCESS FAILED FOR PHYSICAL IP n.
Placing the physical IP n into online status has failed in an automatic activation sequence. S: Continues the automatic activation sequence. O: Report the message ID and the message text to the field engineer.

LPRM338W
AUTOMATIC IP OFFLINE PROCESS FAILED FOR PHYSICAL IP n.
Placing the physical IP n into offline status has failed in an automatic activation sequence. S: Continues the automatic activation sequence. O: Report the message ID and the message text to the field engineer.

LPRL340E
ACTIVATION ERROR: LIP NUMBER ASSIGNMENT FAILURE.
LPAR activation has failed while assigning logical IP (LIP) numbers to the LIPs. S: Suspends the specified operation. O: Review the LIP settings on the LPRIPN or SLPDEF frame, review the PIP scheduling numbers on the LPRIPN frame, and retry the activation operation.

LPRL341E
ACTIVATION ERROR: TOO MANY DEDICATED INITIAL LIPS SPECIFIED.
LPAR activation has failed because the specified number of logical IPs (LIPs) in dedicated-and-initial mode defined on the LPRIPN or SLPDEF frame is exceeding the maximum limit. S: Suspends the specified operation. O: Within the entire system or within the subject PIP group as applicable, first take one of the following actions. • Online an offlined physical IP. • Reduce the number of dedicated-and-initial LIPs on the LPRIPN or SLPDEF frame. Then, retry the activation operation.

© COMPAREX Informationssysteme GmbH

LPRL342E

ACTIVATION ERROR: TOO MANY SHARED INITIAL LIPS SPECIFIED.

LPAR activation has failed because the specified number of logical IPs (LIPs) in shared-and-initial mode defined on the LPRIPN or SLPDEF frame is exceeding the maximum limit.

S: Suspends the specified operation.

O: Within the entire system or within the subject PIP group as applicable, first take one of the following actions.
- Online an offlined physical IP.
- Reduce the number of dedicated-and-initial LIPs on the LPRIPN or SLPDEF frame.

Then, retry the activation operation.

LPRL343E

ACTIVATION ERROR: TOO MANY RESERVED LIPS SPECIFIED.

LPAR activation has failed because the specified number of logical IPs (LIPs) in reserved mode (either dedicated or shared) defined on the LPRIPN or SLPDEF frame is exceeding the maximum limit.

S: Suspends the specified operation.

O: Within the entire system or within the subject PIP group as applicable, reduce the number of reserved LIPs on the LPRIPN or SLPDEF frame. Then, retry the activation operation.

LPRL346E

ACTIVATION ERROR: FAILURE IN ALLOCATING DEDICATED INITIAL LIPS.

LPAR activation has failed while allocating the specified number of logical IPs (LIPs) in dedicated-and-initial mode. There already exists an online LIP in shared mode.

S: Suspends the specified operation.

O: Within the entire system or within the subject PIP group as applicable, first take one of the following actions.
- Online an offlined physical IP.
- Reduce the number of dedicated-and-initial LIPs on the LPRIPN or SLPDEF
- frame.
- Offline an onlined shared LIP.

Then, retry the activation operation.

LPRL347E

ACTIVATION ERROR: TOO MANY DEDICATED INITIAL ICF LIPS SPECIFIED.

LPAR activation has failed because the specified number of logical IPs (LIPs) in dedicated-and-initial-and-ICF mode defined on the LPRIPN or SLPDEF frame is exceeding the maximum limit.

S: Suspends the specified operation.

O: Within the entire system or within the subject PIP group as applicable, first take one of the following actions.
- Online an offlined and ICF-installed physical IP.
- Reduce the number of dedicated-and-initial-and-ICF LIPs on the LPRIPN or SLPDEF frame.

Then, retry the activation operation.

LPRL348E

ACTIVATION ERROR: TOO MANY SHARED INITIAL ICF LIPS SPECIFIED.

LPAR activation has failed because the specified number of logical IPs (LIPs) in dedicated-and-initial-and-ICF mode defined on the LPRIPN or SLPDEF frame is exceeding the maximum limit.

S: Suspends the specified operation.

O: Within the entire system or within the subject PIP group as applicable, first take one of the following actions.
- Online an offlined and ICF-installed physical IP.
- Reduce the number of dedicated-and-initial-and-ICF LIPs on the LPRIPN or SLPDEF frame.

Then, retry the activation operation.

© COMPAREX Informationssysteme GmbH

LPRL349E

ACTIVATION ERROR: TOO MANY RESERVED ICF LIPS SPECIFIED.

LPAR activation has failed because the specified number of logical IPs (LIPs) in dedicated-and-initial-and-ICF mode defined on the LPRIPN or SLPDEF frame is exceeding the maximum limit.

S: Suspends the specified operation.

O: Within the entire system or within the subject PIP group as applicable, reduce the number of reserved-and-ICF LIPs on the LPRIPN or SLPDEF frame. Then, retry the activation operation.

LPRL352E

[GROUPx]LPARmm LIPn (DEDICATED) ONLINE FAILED: NO RESCHEDULABLE PIP.

An attempt to online the logical IP (LIP) n of [Group x] LPAR mm defined as dedicated LIP has failed. There exists no physical IP (PIP) that can be dynamically rescheduled from shared to dedicated mode. An LPAR Group number is indicated only on a processor model operating in 2-IOCDS mode.

S: Suspends the specified operation.

O: Within the entire system or within the subject PIP group as applicable, first take one of the following actions.
- Online an offlined PIP.
- Offline any other onlined LIP.
- Deactivate any other LPAR.

Then, retry the LIP onlining operation.

LPRL353E

[GROUPx]LPARmm LIPn (DEDICATED) ONLINE FAILED: NO AVAILABLE PIP.

An attempt to online the logical IP (LIP) n of [Group x] LPAR mm defined as dedicated LIP has failed. There remains no physical IP (PIP) that can switch from shared to dedicated mode since all the PIPs are already allocated to online LIPs in shared mode. An LPAR Group number is indicated only on a processor model operating in 2-IOCDS mode.

S: Suspends the specified operation.

O: Within the entire system or within the subject PIP group as applicable, first take one of the following actions.
- Online an offlined PIP.
- Offline an onlined LIP of an LPAR not using Physical IP Group Scheduling Facility.
- Deactivate an LPAR not using Physical IP Group Scheduling Facility.

Then, retry the LIP onlining operation.

LPRL354E

[GROUPx]LPARmm LIPn (SHARED) ONLINE FAILED: NO AVAILABLE PIP.

An attempt to online the logical IP (LIP) n of [Group x] LPAR mm defined as dedicated LIP has failed. There remains no physical IP (PIP) that can switch from shared to dedicated mode since all the PIPs are already allocated to online LIPs in shared mode. An LPAR Group number is indicated only on a processor model operating in 2-IOCDS mode.

S: Suspends the specified operation.

O: First take one of the following actions.
- Within the entire system or within the subject PIP group as applicable, online an offlined PIP.
- Within the same LPAR, offline any other onlined LIP.

Then, retry the LIP onlining operation.

© COMPAREX Informationssysteme GmbH

LPRL355E

[GROUPx]LPARmm LIPn (SHARED) ONLINE FAILED: NO AVAILABLE ICF PIP.

An attempt to online the logical IP (LIP) n of [Group x] LPAR mm defined as shared-and-ICF LIP has failed. Within the same LPAR, all the ICF-installed physical IPs (PIPs) in shared mode are already allocated to online LIPs in shared-and-ICF mode. An LPAR Group number is indicated only on a processor model operating in 2-IOCDS mode.

S: Suspends the specified operation.

O: First take one of the following actions.
- Within the entire system or within the subject PIP group as applicable, online an ICF-usable but offlined PIP.
- Within the same LPAR, offline any other ICF-usable online LIP.

Then, retry the LIP onlining operation.

LPRL356E

ACTIVATION ERROR: KSU ID OR CDX NUMBER NOT DEFINED.

LPAR activation has failed because the logical IP (LIP) for use by the ICF is defined on the LPRIPN or SLPDEF frame but the KSU ID or the CDX number is not defined for the target LPAR on the LPRICF frame.

S: Suspends the specified operation.

O: Define the KSU ID or the CDX number on the LPRICF frame and retry the activation oepration.

LPRL357E

ACTIVATION ERROR: FAILURE IN ALLOCATING DEDICATED ICF LIPS.

LPAR activation has failed because of an error in allocating the specified number of logical IPs (LIPs) in dedicated-and-initial-and-ICF mode. There already exists an online LIP in shared-and-ICF mode.

S: Suspends the specified operation.

O: Within the entire system or within the subject PIP group as applicable, first take one of the following actions.
- Online an ICF-usable but offlined PIP.
- Reduce the number of LIPs in dedicated-and-initial-and-ICF mode on the LPRIPN or SLPDEF frame.
- Offline the existing LIP in shared-and-ICF mode.

Then, retry the activation operation.

LPRL358E

[GROUPx]LPARmm LIPn (DEDICATED) ONLINE FAILED: NO AVAILABLE ICF PIP.

An attempt to online the logical IP (LIP) n of [Group x] LPAR mm defined as dedicated-and-ICF LIP has failed. There remains no ICF-installed physical IP (PIP) that can switch from shared to dedicated mode since all the ICF-installed PIPs are already allocated to online LIPs in shared-and-ICF mode. An LPAR Group number is indicated only on a processor model operating in 2-IOCDS mode.

S: Suspends the specified operation.

O: Within the entire system or within the subject PIP group as applicable, first take one of the following actions.
- Online an offlined PIP.
- Offline an ICF-usable online LIP of an LPAR not using Physical IP Group Scheduling Facility.
- Deactivate an LPAR having an ICF-usable online LIP and not using Physical IP Group Scheduling Facility.

Then, retry the LIP onlining operation.

© COMPAREX Informationssysteme GmbH

LPRL359E

ACTIVATION ERROR: INSUFFICENT SHARED PIPS.

LPAR activation has failed because of an error in allocating a physical IP (PIP) in shared mode. There exists an LPAR that configures the number of online logical IPs (LIPs) in shared mode exceeding that of online PIPs in shared mode. Chances are a failure or offlining occurrence on PIPs in shared mode. Consequently, no more LPARs can be activated.

S: Suspends the specified operation.

O: Within the entire system or within the subject PIP group as applicable, first take one of the following actions.
- Online an offlined PIP.
- Offline an onlined LIP in shared mode in an LPAR having excessive number of shared LIPs.
- Deactivate an LPAR having excessive number of shared LIPs.

Then, retry the LIP onlining operation.

LPRL360E

[GROUPx]LPARmm LIPn ONLINE FAILED: LIP ALLOCATION FAILURE.

An attempt to online the logical IP (LIP) n of [Group x] LPAR mm has failed because a physical IP in dedicated mode has already been allocated to the onlining target. An LPAR Group number is indicated only on a processor model operating in 2-IOCDS mode.

S: Suspends the specified operation.

O: Within the entire system or within the subject PIP group as applicable, first take one of the following actions.
- Online an offlined PIP.
- Offline an onlined LIP in shared mode.

Then, retry the LIP onlining operation.

LPRL361E

ACTIVATION ERROR: ICF-DEFINED LIP CANNOT OPERATE IN TARGET MODE.

LPAR activation has failed because the logical IP (LIP) for use by the ICF (Integrated Cryptographic Facility) can only operate in ESA/390 mode but the mode of the LIP target(s) currently allocated on the LPRIPN or SLPDEF frame is not ESA/390.

S: Suspends the specified operation.

O: Place the target LPAR into ESA/390 mode on the LPRDEF frame, or redefine the number of LIPs available for the ICF to 0 on the LPRIPN or SLPDEF frame. Then, retry the activation operation.

LPRL362E

COMMAND REJECTED: INSUFFICENT SHARED PIPS IN NEW PIP GROUP.

The specified attempt of assigning a new physical IP (PIP) group number to an activated LPAR has been rejected. The number of online logical IPs (LIPs) in shared mode in the subject LPAR exceeds the number of online PIPs in shared mode in the specified new PIP group.

S: Suspends the specified operation.

O: Within the entire system or within the subject PIP group as applicable, first take one of the following actions.
- Offline an online LIP in shared mode of the subject LPAR.
- Online an offlined PIP in the specified new PIP group.
- Specify another new PIP group number.

Then, retry the suspended operation.

© COMPAREX Informationssysteme GmbH

LPRL363E
COMMAND REJECTED: INSUFFICENT SHARED ICF PIPS IN NEW PIP GROUP.
The specified attempt of assigning a new physical IP (PIP) group number to an activated LPAR has been rejected. The number of online logical IPs (LIPs) in shared-and-ICF mode in the subject LPAR exceeds the number of online PIPs in shared-and-ICF mode in the specified new PIP group. S: Suspends the specified operation. O: Within the entire system or within the subject PIP group as applicable, first take one of the following actions. • Offline an online LIP in shared-and-ICF mode of the subject LPAR. • Online an offlined ICF-usable PIP in the specified new PIP group. • Specify another new PIP group number. Then, retry the suspended operation.

LPRL390A
[GROUPx]LPAR mm BUSY. TRY LATER.
The specified command has been rejected because [LPAR Group x] LPAR mm is busy. An LPAR Group number is indicated only on a processor model operating in 2-IOCDS mode. S: Suspends the specified operation. O: Retry the specified operation after the busy status is over.

LPRL391E
ETAF PORT n OF SIDE m IS DISABLED DUE TO HARDWARE ERROR.
ETAF port n of side m is disabled because of a hardware error. This message only applies to a processor model on which an External Timer Attachment Feature is installed. S: Continues processing. O: Report the message ID and the message text to the field engineer.

LPRL392E
DEACTIVATION FAILURE: FAILED PIP EXISTS.
LPAR deactivation has failed because a failing physical IP (PIP) exists in the system. S: Suspends the LPAR deactivation. O: Recover the failing PIP and retry the LPAR deactivation.

LPRL395I
UNEXPECTED SVP CONDITION DETECTED ON SOP=xxxxxxxx. CC=x.
An unexpected condition code x is detected on completion of the SVP operation xxxxxxxx. S: Suspends the SVP operation. O: Report the message ID and the message text to the field engineer.

LPRL396I
UNEXPECTED SVP CONDITION DETECTED ON CMD=xxxxxxxx. CC=x.
An unexpected condition code x is detected on completion of the SVP operation xxxxxxxx. S: Suspends the SVP operation. O: Report the message ID and the message text to the field engineer.

LPRL397I
SVP OPERATION FAILED: TIMEOUT ON SOP=xxxxxxxx.
The SVP operation has failed because of a timeout check for the SVP operation xxxxxxxx. S: Suspends the SVP operation. O: Report the message ID and the message text to the field engineer.

© COMPAREX Informationssysteme GmbH

LPRL398I
SVP OPERATION FAILED: TIMEOUT ON CMD=xxxxxxxx.
The SVP operation has failed because of a timeout check for the SVP operation xxxxxxxx. S: Suspends the SVP operation. O: Report the message ID and the message text to the field engineer.

LPRL399I
UNEXPECTED INTERRUPT ARRIVED FROM SVP. STATUS=xxxxxxxx xxxxxxxx.
An unexpected interrupt has arrived from the SVP. The status shows xxxxxxxx xxxxxxxx. S: Continues processing, ignoring the interrupt. O: Report the message ID and the message text to the field engineer.

LPRR400S
SPECIFIED LPAR NUMBER IS UNDEFINED.
The specified LPAR number is undefined. S: Suspends the specified operation. O: Reenter a correct LPAR number.

LPRR410S
COMMAND REJECTED:S INVALID LPAR STATUS.
The specified command has been rejected because the command is not executable in the current LPAR status. S: Suspends the specified operation. O: Change the LPAR status and reenter the command.

LPRR420S
INVALID LPAR PROCESSING MODE.
The specified LPAR processing mode is invalid. S: Suspends the specified operation. O: Specify a correct LPAR processing mode and retry the suspended operation.

LPRR430S
NO TARGET DATA.
Target data for the specified input parameter does not exist. S: Suspends the specified operation. O: Reenter a correct input parameter.

LPRR440S
INVALID INPUT PARAMETER.
The specified input parameter is invalid. S: Suspends the specified operation. O: Reenter a correct input parameter.

LPRR441S
INVALID LOGICAL IP NUMBER.
The specified logical IP number is invalid, e.g., it is already assigned or unassignable. S: Suspends the specified operation. O: Reenter a correct logical IP number.

© COMPAREX Informationssysteme GmbH

LPRR443S
SPECIFIED OPERATION IS INVALID IN CURRENT LPAR PROCESSING MODE.
The specified operation is not executable in the current processing mode of the corresponding LPAR. S: Suspends the specified operation. O: Change the processing mode of the LPAR and retry the suspended operation.

LPRR444S
CHANNEL PATH NOT CONFIGURED.
The specified channel path is not configured. S: Suspends the specified operation. O: Ensure current channel path configuration on LPRCH frame and configure the target channel path on the same frame.

LPRR447S
THE CHP IS ALREADY IN THE DESIRED STATE.
The specified operation to place the target channel path online or offline has been ignored because the target channel path is already placed in the desired state. S: Continues processing. O: Retry the operation, if necessary, with correct operands.

LPRR448E
CHANNEL ONLINE PROCESS FAILED: CHANNEL TYPE MISMATCH.
The channel onlining process has failed because of a channel type mismatch on the target channel. S: Suspends the specified operation. O: See CCHCNF and CHPSTS frames for problem determination, and consult the field engineer for solution.

LPRR449E
CHANNEL ONLINE PROCESS FAILED: FAILED CHANNEL EXISTS.
The channel onlining process has failed because of a failure on the target channel. S: Suspends the specified operation. O: See CCHCNF and CHPSTS frames for problem determination, and consult the field engineer for solution.

LPRR450S
LPAR ACTIVATION FAILED: INCORRECT DEFINITION INFORMATION.
LPAR activation has failed due to incorrect definition information on LPRCH, LPRDEF, LPRIPN, LPRRSC, or SLPDEF frame. S: Suspends the LPAR activation. O: Reenter correct definition information on LPRCH, LPRDEF, LPRIPN, LPRRSC, or SLPDEF frame, and retry the LPAR activation.

LPRR460W
SPECIFIED LPAR IS PROTECTED.
The protection or isolation function is active on the specified LPAR. S: Suspends the specified operation. O: Unprotect the LPAR, or cancel the protection or isolation function using the LPRCTL frame, and reenter the command or the field data.

© COMPAREX Informationssysteme GmbH

LPRR470E
COMMAND REJECTED: DUPLICATE DEVICE NUMBER.
The command to reconfigure channel paths on the LPRCH frame was rejected because of redundancy in device numbers. S: Suspends the specified operation. O: Correct the redundant device number condition and reenter the command.

LPRR475W
CHANNEL RECONFIGURATION WARNING: DUPLICATE DEVICE NUMBER DETECTED.
While the OS command or the System CHP command is executed, redundancy in device numbers is detected. S: Continues processing (partially placed into online status). O: Correct the redundant device number condition and reenter the command.

LPRR480E
STORAGE ALLOCATION FAILURE: LOW ON MEMORY.
Allocation of storage area failed because of insufficient free space. S: Suspends the specified operation. O: Change the storage assignment and reenter the command.

LPRR481S
MS DEFINITION IS NOT A MULTIPLE OF LPRRSC UNIT SIZE.
The specified MS size is not a multiple of the MS unit size defined on the LPRRSC frame. S: Suspends the specified operation. O: Confirm the MS unit size defined on the LPRRSC frame, and retry the suspended operation with a proper MS size.

LPRR482S
ES DEFINITION IS NOT A MULTIPLE OF LPRRSC UNIT SIZE.
The specified ES size is not a multiple of the ES unit size defined on the LPRRSC frame. S: Suspends the specified operation. O: Confirm the ES unit size defined on the LPRRSC frame, and retry the suspended operation with a proper ES size.

LPRR483S
MS DEFINITION EXCEEDS AVAILABLE STORAGE.
The specified MS size is invalid because it exceeds the available size. S: Suspends the specified operation. O: Reenter a correct input parameter.

LPRR484S
ES DEFINITION EXCEEDS AVAILABLE STORAGE.
The specified ES size is invalid because it exceeds the available size. S: Suspends the specified operation. O: Reenter a correct input parameter.

© COMPAREX Informationssysteme GmbH

LPRR485W
STORAGE IS PARTIALLY ALLOCATED.
When allocating storage area, contiguous unused area was smaller than the required storage capacity; hence, as much part of the storage area as the contiguous unused area has been allocated. S: Continues processing. O: Change the current storage allocation so as to secure enough storage area, deactivate the partially allocated storage area, and re-allocate the storage area.

LPRR490A
RESOURCE BUSY, TRY LATER.
The command is rejected because the resource is processing a previously-entered command. S: Continues processing. O: Wait for completion of the ongoing processing and reenter the rejected command.

LPRR510I
SCP COMMAND REJECTED: COMMAND TYPE MASKED OFF BY SCP.
The specified command to the SCP is rejected because the type of that command has been masked off (defined as not acceptable) by the SCP. S: Continues processing, ignoring the specified operation. O: No action (give up specifying the ignored command).

LPRR520E
COMMAND REJECTED: TIME MACHINE/WARP LPAR IS ACTIVE.
Loading of Service Code (special code for processing of Time Machine) has been cancelled because any Time Machine LPAR or Time Warp LPAR in the activated status exists. This message only applies to a processor model on which Time Machine is available. S: Cancels loading of Service Code. O: Have the field engineer stop the attempt of Service Code loading.

LPRR521S
INVALID PHYSICAL IP NUMBER.
The specified physical IP number is invalid. Chances are the physical IP does not exist. S: Suspends the specified operation. O: Reenter a correct physical IP number.

LPRR522U
CANNOT CHANGE MICRO-FILTER SETTING.
Change of microfilter setting has been failed. This message only applies to a processor model on which Time Machine is available. S: Suspends the specified operation. O: Stop the attempt of changing microfilter setting. Unless such attempt has been made, wait a while and retry the suspended operation.

LPRR523W
MICRO-FILTER IS ON, AND TIME MACHINE OPTION IS OFF.
Microfilter is enabled, and Time Machine is disabled on the physical IP. This message only applies to a processor model on which Time Machine is available. S: Continues processing. O: If necessary, enable Time Machine on the target physical IP.

© COMPAREX Informationssysteme GmbH

LPRR524E

COMMAND REJECTED: CONSOLE MODE SET TO TSO.

The command is rejected because the console mode of the target physical IP under Time Machine is TSO. This message only applies to a processor model on which Time Machine is available.

S: Suspends the specified operation.

O: Change the console mode to TIP by specifying the C option, and reenter the rejected command.

LPRR525S

COMMAND REJECTED: EITHER SPV OR PRB SETTING MUST BE E.

The command is rejected because its operation code settings for Supervisor (SPV) and Problem (PRB) modes are both disabled (D). This message only applies to a processor model on which Time Machine is available.

S: Suspends the specified operation.

O: Change either or both of the SPV and PRB settings to be enabled (E) and reenter the rejected command.

LPRR526E

COMMAND REJECTED: TARGET PIP IN DEDICATED MODE.

The specified command has been rejected because the target physical IP (PIP) is scheduled in dedicated mode.

S: Suspends the specified operation.

O: Offline the corresponding LIP in dedicated mode or deactivate the subject LPAR, and reenter the command.

LPRR527E

COMMAND REJECTED: SHORTAGE OF SHARED PIPS IN SAME PIP GROUP.

The specified command has been rejected because all the physical IPs (PIPs) in shared mode are already allocated to online logical IPs (LIPs) in shared mode in the same PIP scheduling group.

S: Suspends the specified operation.

O: First take one of the following actions.
- Offline some onlined LIPs in shared mode.
- Deactivate the subject LPAR.
- Online an offlined PIP within the same PIP scheduling group.
- Include an online PIP, either belonging to any other PIP scheduling group or not belonging to any PIP scheduling group, into the target PIP scheduling group.
  Then, reenter the command.

LPRR528E

COMMAND REJECTED: SHORTAGE OF SHARED ICF PIPS IN SAME PIP GROUP.

The specified command has been rejected because all the ICF-installed physical IPs (PIPs) in shared mode are already allocated to online logical IPs (LIPs) in shared-and-ICF mode in the same PIP scheduling group.

S: Suspends the specified operation.

O: First take one of the following actions.
- Offline some onlined LIPs in shared-and-ICF mode.
- Deactivate the subject LPAR.
- Online an ICF-usable but offlined PIP within the same PIP scheduling group.
- Include an ICF-usable online PIP, either belonging to any other PIP scheduling group or not belonging to any PIP scheduling group, into the target PIP scheduling group.
  Then, reenter the command.

LPRR529E

PHYSICAL IP n OFFLINE FAILED: DEDICATED LIP ONLINE.

An attempt to offline the physical IP (PIP) n has failed because a logical IP (LIP) in dedicated mode is onlined to the target physical IP.

S: Suspends the specified operation.

O: Offline the subject LIP in dedicated mode or deactivate the LPAR having that LIP, and retry the PIP offlining operation.

© COMPAREX Informationssysteme GmbH

LPRR530E
PHYSICAL IP n OFFLINE FAILED: MLPF REQUIRES AT LEAST ONE SHARED PIP.
An attempt to offline the physical IP (PIP) n has failed because the specified PIP is the last online PIP in shared mode (minimum requirement). S: Suspends the specified operation. O: Within the entire system or within the subject PIP group as applicable, first take one of the following actions. • Online an offlined PIP. • Offline an onlined logical IP (LIP) in shared mode. • Deactivate the LPAR having an onlined LIP in shared mode. Then, retry the PIP offlining operation.

LPRR531E
INVALID INPUT PARAMETER: TOO MANY LIPS SPECIFIED.
An attempt to allocate logical IPs (LIPs) on the LPRIPN or SLPDEF frame has failed because the specified number of LIPs is exceeding the maximum limit. S: Suspends the specified operation. O: Redefine the number of LIPs not to exceed the limit. Then, retry the LIP allocation operation.

LPRR590E
OPERATION TERMINATED: HARDWARE ERROR.
A hardware error has been detected and operation has been terminated. S: Terminates the specified operation. O: Report the message ID and the message text to the field engineer.

LPRR595E
OPERATION NULLIFIED: HARDWARE ERROR.
A hardware error has been detected and operation has been nullified. S: Suspends the specified operation. O: Try again. If the failure persists, report the message ID and the message text to the field engineer.

LPRF600A
FRAME BUSY, TRY LATER.
The command is rejected because the frame is processing a previously-entered command. S: Suspends the specified operation. O: Wait for completion of the ongoing command execution and reenter the rejected command.

LPRF601A
INITIALIZATION IN PROCESS, TRY LATER.
The command is rejected because the system is in the process of initialization. S: Suspends the specified operation. O: Wait for completion of the initialization processing and reenter the command.

LPRF602A
COMMUNICATION WITH LPAR CONTROL ROUTINE IS BUSY, TRY LATER.
The command is rejected because the frame control routine is busy communicating with the LPAR control routine for processing of a previous command. S: Suspends the specified operation. O: Wait for completion of the ongoing command execution and reenter the rejected command.

© COMPAREX Informationssysteme GmbH

LPRF603A
COMMUNICATION WITH MASTER ROUTINE IS BUSY, TRY LATER.
The command is rejected because the frame control routine is busy communicating with the master routine for processing of a previous command. S: Suspends the specified operation. O: Wait for completion of the ongoing command execution and reenter the rejected command.

LPRF604A
COMMUNICATION WITH ANOTHER FRAME ROUTINE IS BUSY, TRY LATER.
The command is rejected because the frame control routine is busy communicating with another frame control routine for processing of a previous command. S: Suspends the specified operation. O: Wait for completion of the ongoing command execution and reenter the rejected command.

LPRF610A
LPAR ACTIVATION IN PROCESS, TRY LATER.
The command is rejected because the LPAR specified by the command is in the process of activation. S: Suspends the specified operation. O: Wait for completion of the activation processing and reenter the command.

LPRF611S
SPECIFIED LPAR IS PROTECTED.
The command is rejected because the LPAR specified by the command is protected. S: Suspends the specified operation. O: Unprotect the LPAR and reenter the command.

LPRF620S
FRAME OR LPAR IS IN USE BY ANOTHER CONSOLE PORT.
The frame or LPAR specified by the command is now being displayed on another CD; so, the specified frame or LPAR cannot be displayed on this CD. S: Suspends the specified operation. O: Change the frame on the other CD displaying the specified frame or LPAR, and reenter the command on this CD.

LPRF621E
PMC INTERFACE ERROR.
An interface error has occurred on the interface with the PMC or HMC. S: Suspends the specified operation. O: Report the message ID and the message text to the field engineer.

LPRF622E
USER LOGON INTERFACE ERROR.
The SVP has failed to reject the user's logon in an incorrect user level, but MLPF Hypervisor has detected such discrepancy on its interface with the SVP. S: Suspends the specified operation. O: Report the message ID and the message text to the field engineer.

© COMPAREX Informationssysteme GmbH

LPRF623I
COMMAND REJECTED: POLICY IS ACTIVE.
Command execution request has been rejected because the specified command is effective only when the policy task is inactive. S: Suspends the specified operation. O: Deactivate the policy task and retry the suspended operation.

LPRF635I
[GROUPx]LPAR mm RECOVERED FROM COMMUNICATION ERROR.
Command execution request to [LPAR Group x] LPAR mm becomes acceptable because a response from the same LPAR, which has been delayed by the cause of the message ID LPRF640E, is returned. An LPAR Group number is indicated only on a processor model operating in 2-IOCDS mode. S: Continues processing. O: No action.

LPRF636I
MASTER TASK RECOVERED FROM COMMUNICATION ERROR.
Command execution request to the master task becomes acceptable because a response from the master task, which has been delayed by the cause of the message ID LPRF641E, is returned. S: Continues processing. O: No action.

LPRF637I
OTHER FRAME TASK RECOVERED FROM COMMUNICATION ERROR.
Command execution request to the other frame task becomes acceptable because a response from the frame task, which has been delayed by the cause of the message ID LPRF642E, is returned. S: Continues processing. O: No action.

LPRF638
POLICY TASK RECOVERED FROM COMMUNICATION ERROR.
Command execution request to the policy task becomes acceptable because a response from the policy task, which has been delayed by the cause of the message ID LPRF643E, is returned. S: Continues processing. O: No action.

LPRF639E
SYSTEM CAN NOT COMMUNICATE ANY MORE.
Further frame operation is unavailable because all command execution tasks suffer certain troubles. S: Continues processing. O: Report the message ID and the message text to the field engineer.

LPRF640E
NO RESPONSE FROM [GROUPx]LPAR mm.
Command execution completion is not reported from [LPAR Group x] LPAR mm to the frame within system-defined time. Suspected is an error in that LPAR or a temporary system wait caused by specifying of the Stop key function during the command execution. If this message is followed by the message ID LPRF635I, the error is temporary. An LPAR Group number is indicated only on a processor model operating in 2-IOCDS mode. S: Continues processing. O: Since an error in the subject LPAR is suspect, report the message ID and the message text to the field engineer.

© COMPAREX Informationssysteme GmbH

LPRF641E
NO RESPONSE FROM MASTER TASK.
Command execution completion is not reported from the master task within the system-defined time. Suspected is an error in the master task or a temporary system wait caused by specifying of the Stop key function during the command execution. If this message is followed by the message ID LPRF636I, the error is temporary. S: Continues processing. O: Since an error in the master task is suspect, report the message ID and the message text to the field engineer.

LPRF642E
NO RESPONSE FROM OTHER FRAME.
Command execution completion is not reported from the other frame within the system-defined time. Suspected is an error in that frame or a temporary system wait caused by specifying of the Stop key function during the command execution. If this message is followed by the message ID LPRF637I, the error is temporary. S: Continues processing. O: Since an error in the subject frame task is suspect, report the message ID and the message text to the field engineer.

LPRF643E
NO RESPONSE FROM POLICY TASK.
Command execution completion is not reported from the policy task within system-defined time. Suspected is an error in the policy task or a temporary system wait caused by specifying of the Stop key function during the command execution. If this message is followed by the message ID LPRF638I, the error is temporary. S: Continues processing. O: Report the message ID and the message text to the field engineer.

LPRF650U
GET-MAIN FAILED.
An attempt to secure a work area for frame operation has failed. S: Suspends the specified operation. O: Report the message ID and the message text to the field engineer.

LPRF668U
LOCAL TIME NOW DYNAMICALLY ALTERED. POLICY MAY BE AFFECTED.
As a result of dynamic SVP local time alteration, certain policy scheduling may be affected. S: Continues processing. O: Redefine the policy scheduling if necessary.

LPRF669I
OPERATION CANCELLED: POLICY PROFILE IS ALREADY INACTIVE.
The specified operation has been cancelled because the policy profile is already inactive. S: Continues processing. O: No action.

LPRF670I
POLICY PROFILE |profile number mm| NOW ACTIVE.
The policy profile with the given profile number mm has been successfully made active. S: Continues processing. O: No action.

© COMPAREX Informationssysteme GmbH

LPRF671I
POLICY PROFILE |profile number mm| |line nn| ENABLED FOR SPECIFIED DATE.
The policy profile has been partially made active so that the given profile number mm line nn is enabled to be active on the specified date. S: Continues processing. O: No action.

LPRF672W
POLICY PROFILE |profile number mm| IS PARTIALLY ACTIVE.
The policy profile with the given profile number mm has been made partially active. An old date or an invalid policy script (policy script not defined to any policy profile) has been detected in the policy profile. S: Continues processing, ignoring the unsuccessful part. O: No action. If necessary, deactivate the subject policy profile, correct that policy profile or is policy script, and retry activation of the policy profile.

LPRF673I
POLICY PROFILE ALREADY PLACED IN TARGET STATE.
The specified operation has been ignored because the policy profile is already placed in the target state. S: Continues processing. O: No action. If necessary, deactivate the subject policy profile and activate another (target) policy profile.

LPRF675S
POLICY PROFILE STILL INACTIVE. INVALID DATE OR SCRIPT DETECTED.
An attempt to make the policy profile active has failed and the policy profile remains inactive. This condition occurs when an old date or an invalid policy script (policy script not defined to any policy profile) has been detected in the policy profile. This condition also occurs when the class of the specified profile has been turned from emergency to normal but the policy script still contains any emergency event keyword. S: Continues processing. O: Correct the target policy profile or its policy script, and retry activation of the policy profile.

LPRF676S
POLICY PROFILE STILL INACTIVE. INVALID PROFILE SPECIFIED.
An attempt to make the policy profile active has failed and the policy profile remains inactive. An invalid profile was specified. S: Continues processing. O: Specify another policy profile and retry activation of that policy profile.

LPRF677I
POLICY PROFILE |profile number mm| NOW INACTIVE.
The policy profile with the given profile number mm has been made inactive. S: Continues processing. O: No action.

LPRF678I
POLICY SCRIPT |script number mm| NOW ACTIVE.
The inactive policy script with the given script number mm has been made active. S: Continues processing. O: No action.

© COMPAREX Informationssysteme GmbH

LPRF679E
POLICY SCRIPT |script number mm| FAILED: INVALID FORMAT DETECTED.
Execution of the policy script with the given script number mm has been disrupted because an invalid format is detected within the policy script. S: Deactivates the subject policy profile. O: Report the message ID and the message text to the field engineer.

LPRF680E
POLICY SCRIPT |script number mm| NOW INACTIVE.
The policy script with the given script number mm has been made inactive. S: Continues processing. O: No action.

LPRF681W
PMC COMMAND IN POLICY SCRIPT |script number mm| |line nn| IGNORED: LPAR DEFINED PX=N.
The PMC command in the given policy script number mm line nn has been ignored because the specified LPAR in the operand is defined as PX=N, i.e., not permitted to be the PMC command target. S: Continues processing, ignoring the PMC command in the given portion. O: No action.

LPRF682W
INVALID DATE DETECTED IN POLICY PROFILE |profile number mm| |line nn|.
An invalid date has been detected in the policy profile number mm line nn. The date of 1 January 2040 or above is not supported. S: Continues processing, ignoring the specified date. O: No action.

LPRF683S
INVALID DATE OR EVENT SPECIFIED FOR TARGET PROFILE CLASS.
An invalid date or event has been specified for the target profile class. S: Suspends the specified operation. O: Reenter a correct date or event, or specify another profile class.

LPRF684W
EMERGENCY-CLASS PROFILE NOT PERFORMED FOR SPECIFIED EVENT.
An event specified for an emergency-class profile occurred but the profile script has not been executed. S: Suspends the specified operation. O: No action.

LPRF685W
CANNOT ACTIVATE SPECIFIED PROFILE: EMERGENCY-CLASS PROFILE.
The specified profile cannot be activated because it is an emergency-class profile. S: Suspends the specified operation. O: No action.

© COMPAREX Informationssysteme GmbH

LPRF686I
EXISTING EMERGENCY-CLASS PROFILE HAS BEEN SUPERCEDED.
A profile has been specified into emergency class and hence the current emergency-class profile, if existing, may automatically turn into normal class. S: Continues processing. O: No action.

LPRF687W
TARGET PROFILE OR SCRIPT ACCESS REJECTED: EXCLUSIVE CONTROL ENABLED.
An attempt to access the target profile or script has been rejected because it is in use with exclusive control enabled. S: Suspends the specified operation. O: No action.

LPRF689I
COMMAND PROCESSING SUSPENDED: ANOTHER FRAME CHECK-STOPPED.
The specified command processing has been suspended because a frame other than the target one entered a check-stopped state. S: Suspends the command processing. O: See the LPRSSR frame for problem determination.

LPRF690A
OTHER COMMAND IN PROCESS, TRY LATER.
The specified command has been rejected because execution of a previously-entered command is in progress. S: Suspends the specified operation. O: Retry the operation after the ongoing command execution is completed.

LPRF691E
ANOTHER COMMAND IS BEING PROCESSED, TRY LATER.
The specified command has abended because the command-processing LPAR entered a check-stopped state. S: Suspends the specified operation. O: See the LPRSSR frame for problem determination, and consult the field engineer.

LPRF692I
TARGET LPAR CHECK-STOPPED.
The target LPAR has entered a check-stopped state. S: Continues processing. O: No action.

LPRF693E
COMMAND REJECTED: RESULTING TOD IS OUT OF RANGE.
The command is rejected because the resulting TOD with the specified date, time, and offset entries is out of the acceptable range. A valid TOD must be from 1989/01/01 00:00:00 to 2039/12/31 23:59:59, both times included. S: Suspends the specified operation. O: Retry the operation with a proper combination of date, time, and offset entries.

© COMPAREX Informationssysteme GmbH

LPRF694E
COMMAND REJECTED: NOT AVAILABLE IN VSF MODE.
The specified command has been rejected because it is not available in VSF mode. S: Suspends the specified operation. O: Quit specifying this command.

LPRF700S
COMMAND SYNTAX ERROR.
A syntax error has been found in the entered command. S: Suspends the specified operation. O: Reenter a correct command.

LPRF701S
COMMAND NAME IS INVALID.
The command name is invalid. S: Suspends the specified operation. O: Correct the command name and reenter the command.

LPRF702S
ENTER A TARGET COMMAND BEFORE EXECUTE.
The command that must be specified before the E command was not specified. S: Suspends the specified operation. O: Enter a target command and reenter the E command.

LPRF705I
COMMAND REJECTED: NOT ACCEPTABLE FOR CURRENT USER LEVEL.
The specified command has been rejected because the current user level is not allowed to use that command. S: Suspends the specified operation. O: Have a user in an applicable user level retry the operation.

LPRF706I
COMMAND REJECTED: PMCA INTERFACE NOT ACTIVE.
The specified command has been rejected because the PMC or HMC is not active. S: Suspends the specified operation. O: Activate the PMC or HMC and retry the operation.

LPRF707S
SF COMMAND REJECTED: INVALID EDIT MODE.
The command that must be specified before the SF command has not been specified. S: Suspends the specified operation. O: Enter the E3 or E4 command and reenter the SF command.

LPRF708S
UNSUPPORTED COMMAND. CALL LPRTOD FRAME AND EXECUTE SIMILAR FUNCTION.
The command is not supported in the current MLPF version. The operator is prompted to call the LPRTOD frame and execute the similar function. S: Suspends the specified operation. O: Call the LPRTOD frame and execute the target function.

© COMPAREX Informationssysteme GmbH

LPRF710S
KEYWORD IS INVALID.
The keyword of the entered command is invalid. S: Suspends the specified operation. O: Correct the keyword and reenter the command.

LPRF712S
SUBCOMMAND NAME OR FRAME NAME IS INVALID.
The subcommand name of the entered system command or the frame name of the entered CALL command is invalid. S: Suspends the specified operation. O: Correct the subcommand name or the frame name, and reenter the command.

LPRF713S
OPERAND VALUE IS INVALID.
The operand value of the entered command is invalid. S: Suspends the specified operation. O: Correct the operand value and reenter the command.

LPRF714S
UNDEFINED LPAR.
The LPAR specified by the command is undefined. S: Suspends the specified operation. O: Correct the specified LPAR and reenter the command.

LPRF715S
FRAME NAME IS INVALID.
The frame name specified by the CALL command is invalid. S: Suspends the specified operation. O: Correct the frame name and reenter the command.

LPRF716S
ESSENTIAL KEYWORD IS MISSING.
A keyword essential to the command is missing. S: Suspends the specified operation. O: Reenter a correct command.

LPRF717S
CONFLICTING KEYWORDS ARE SPECIFIED.
Keywords conflicting with each other are specified in the command. S: Suspends the specified operation. O: Reenter a correct command.

LPRF718S
KEYWORD IS NOT UNIQUELY SPECIFIED.
A keyword is specified twice or more in the command. S: Suspends the specified operation. O: Reenter a correct command.

© COMPAREX Informationssysteme GmbH

LPRF719S
LOGICAL IP NUMBER IS INVALID.
An invalid logical IP number is specified in the command. S: Suspends the specified operation. O: Correct the logical IP number and reenter the command.

LPRF720S
UNIT OPERAND IS INVALID.
An invalid unit operand is specified in the command. S: Suspends the specified operation. O: Correct the unit operand and reenter the command.

LPRF721S
HEX-ASSUMED OPERAND VALUE IS NOT HEX.
A hexadecimal-assumed operand value in the specified command is not hexadecimal. S: Suspends the specified operation. O: Correct the operand value and reenter the command.

LPRF722I
BEGINNING OF DATA.
The current display is the beginning of data. S: Continues processing. O: No action.

LPRF723I
END OF DATA.
The current display is the end of data. S: Continues processing. O: No action.

LPRF725S
INVALID INPUT PARAMETER.
The specified input parameter is invalid. S: Suspends the specified operation. O: Reenter a correct input parameter.

LPRF726E
COMMAND REJECTED: SYSTEM NOT IN CE MODE.
The specified command is rejected because the system is not placed in CE mode. S: Suspends the specified operation. O: Consult the field engineer. If necessary, let him/her place the CE key in the CE position, and retry the rejected command.

LPRF727I
COMMAND SENT TO SCP.
The SCP command entered from the SLPMSG frame has been sent to the SCP. S: Continues processing. O: No action.

© COMPAREX Informationssysteme GmbH

LPRF728S
SPECIFIED GROUP NOT DEFINED, OR LPAR NOT FOUND IN SPECIFIED GROUP.
The specified LPAR Group or the specified LPAR in the LPAR Group is undefined. This message only applies to a processor model operating in 2-IOCDS mode. S: Suspends the specified operation. O: Specify a correct LPAR Group number or LPAR number, and retry the operation.

LPRF730E
CANCEL COMMAND REJECTED.
The CANCEL command has been rejected because the target CD is in a frame busy status. S: Suspends the specified operation. O: Reenter the CANCEL command until accepted.

LPRF731S
PAGE UP/PAGE DOWN COMMAND REJECTED.
The PAGE UP/PAGE DOWN command specified on the SLPAD frame has been rejected because the command is not applicable to the selected facility. The command is effective only with the V, S and M facilities on the SLPAD frame. S: Suspends the specified operation. O: Enter a correct facility code. Then, if necessary, reenter the PAGE UP/PAGE DOWN command.

LPRF732S
TOD COMMAND REJECTED.
The TOD command has been rejected because the TOD clock on the physical processor complex is running normally. S: Suspends the specified operation. O: No action.

LPRF740I
|command name xxxxxxxxxxxx| COMMAND IS BEING PROCESSED. WAIT FOR END OF PROCESSING.
The xxxx command is being processed and the operator is prompted to wait for the end of processing. This message appears not as a result of an error but for information only. S: Continues processing. O: No action.

LPRF741I
|command name xxxxxxxxxxxx| COMMAND EXECUTION HAS BEEN COMPLETED.
The xxxx command has been completed. This message appears not as a result of an error but for information only. S: Continues processing. O: No action.

LPRF742A
CONFIRM |command name xxxxxxxxxxxx| COMMAND EXECUTION? (YES/NO)
The command is requesting the operator's confirmation for the command execution. S: Waits for the operator's confirmation for the command execution. O: Enter "YES" to execute. Enter "NO" or select the Cancel key function from the Keyboard pull-down menu to cancel.

© COMPAREX Informationssysteme GmbH

LPRF743I
|command name xxxxxxxxxxxx| COMMAND PROCESSING CANCELLED BY USER.
The processing of the command has been cancelled. S: Continues processing. O: No action.

LPRF744I
CAUTION: |command name xxxxxxxxxxxx| COMMAND MAY DISRUPT ONGOING SCP OPERATION.
The command may disrupt the ongoing SCP operation. S: Continues processing. O: No action.

LPRF750I
COMMAND COMPLETE.
Command execution has completed. This message appears not as a result of an error but for information only. S: Continues processing. O: No action.

LPRF751E
COMMAND REJECTED: TIME MACHINE FEATURE IS NOT SUPPORTED.
Time Machine is recognized as not installed on this model. This message only applies to a processor model on which Time Machine is available. S: Suspends the specified operation. O: Reinstallation of Time Machine is necessary; call the field engineer.

LPRF760S
INVALID INPUT PARAMETER: TIME ACCELERATOR IS ON.
The parameter is rejected because Time Accelerator is on. This message only applies to a processor model on which Time Accelerator is available. S: Suspends the specified operation. O: System-initialize the target LPAR and reenter the rejected command.

LPRF770E
PMC/HMC ASSIGNMENT ERROR.
An error occurred while operating on the PMC or HMC. S: Suspends the specified operation. O: Report the message ID and the message text to the field engineer.

LPRF780S
PF KEY TEXT IS UNDEFINED.
A PF key without command text definition has been pressed. S: Causes no operation. O: Define a command text for the PF key on the LPRPFK frame, if necessary.

© COMPAREX Informationssysteme GmbH

LPRF781E
PF KEY DIRECTORY IS UNDEFINED.
The PF key directory is not defined to the LPAR control file. S: Suspends saving of PF key texts. O: Report the message ID and the message text to the field engineer.

LPRF782S
COMMAND REJECTED: LPAR PROCESSING MODE IS NOT HCF.
The specified command has been rejected because the target LPAR is not defined as an HCCF-LPAR. S: Suspends the specified operation. O: Redefine the target LPAR into an HCCF-LPAR, and reenter the rejected command.

LPRF783S
COMMAND REJECTED: LPAR PROCESSING MODE IS HCF.
The specified command has been rejected because the target LPAR is defined as an HCCF-LPAR. S: Suspends the specified operation. O: Redefine the target LPAR into an LPAR other than HCCF-LPAR, and reenter the rejected command.

LPRF785S
COMMAND REJECTED: TARGET LPAR DEFINED AS DUMMY-MODE LPAR.
The specified command has been rejected because the target LPAR is defined as a dummy-mode LPAR. S: Suspends the specified operation. O: Redefine the target LPAR into an LPAR other than dummy-mode LPAR, and reenter the rejected command.

LPRF786S
NO VS# ASSIGNED TO TARGET PHYSICAL IP.
No virtual server number is assigned to the target physical IP. S: Suspends the specified operation. O: Specify a correct virtual server number to the target physical IP.

LPRF790S
COMMAND REJECTED: INCORRECT TOD SETTING. ADJUST TOD FIRST.
The specified command has been rejected because the TOD setting is incorrect. The operator is prompted to adjust the TOD clock. S: Suspends the specified operation. O: Adjust the TOD clock by entering the TOD command and specifying the TOD Clock key function from any CD. Then, reenter the rejected command.

LPRF791S
COMMAND REJECTED: LPROPC FRAME IS ALREADY ACTIVE.
The specified command has been rejected because the other CD is displaying the LPROPC frame. S: Suspends the specified operation. O: Have the frame on the other CD closed, and reenter the command on this CD.

LPRF792S
COMMAND REJECTED: SLPOPC FRAME IS ALREADY ACTIVE.
The specified command has been rejected because the other CD is displaying the SLPOPC frame. S: Suspends the specified operation. O: Have the frame on the other CD closed, and reenter the command on this CD.

© COMPAREX Informationssysteme GmbH

LPRF794I
PMC/HMC HAS FORCED FRAME CHANGE TO LPRIDX.
The frame has been forced to change into the LPRIDX frame according to operation on the PMC (Processor Management Console) or HMC (Hardware Management Console). S: Continues processing. O: No action.

LPRF795A
INPUT PARAMETER REJECTED: LPAR IS DEACTIVATED. SELECT CANCEL.
The command with the specified input parameter has been rejected because the target LPAR is deactivated. Select the Cancel key function from the Keyboard pull-down menu. S: Suspends the specified operation but accepts the data entered before the error detection. O: Select the Cancel key function from the Keyboard pull-down menu.

LPRF796I
PMC/HMC SELECTED AS TARGET CONSOLE FOR OS/CF MESSAGES FOR THIS LPAR.
This LPAR is selecting the PMC (Processor Management Console) or HMC (Hardware Management Console) as the target console for the OS and/or HCCF messages. S: Continues processing. O: Refer the OS and/or HCCF messages on this LPAR to the PMC or HMC.

LPRF798E
POLICY TASK CHECK-STOPPED.
The Policy task check-stopped. S: Suspends the specified operation. O: Report the message ID and the message text to the field engineer.

LPRF800S
INCORRECT/INVALID DATA IN FIELD.
An attribute error has been found in field data. S: Suspends the specified operation. O: Correct and reenter the field data.

LPRF801S
UNDEFINED LOGICAL IP NUMBER.
The specified logical IP number is undefined. S: Suspends the specified operation. O: Reenter a defined (displayed) logical IP number.

LPRF802S
UNDEFINED REASON CODE.
The specified reason code is undefined. S: Suspends the specified operation. O: Reenter a defined (displayed on the SLPSY frame) reason code.

LPRF803S
UNDEFINED ENTRY RECORD NUMBER.
The entry record number specified on the LPRSSR frame is undefined. S: Suspends the specified operation. O: Reenter a defined entry record number, i.e., up to the given number of records.

© COMPAREX Informationssysteme GmbH

LPRF804S
UNDEFINED PHYSICAL DEV#/CHPID.
The physical device number or CHPID specified on the SLPDEV frame is undefined. S: Suspends the specified operation. O: Reenter a correct physical device number or CHPID.

LPRF805S
INVALID COMBINATION BETWEEN TYPE AND DATA LENGTH.
The combination between compare data type and data length is invalid. If the compare data type is EQ or NE, the data length must be one or four bytes. If the compare data type is B0 or BI, the data length must be one byte. S: Suspends the specified operation. O: Correct the compare data type or the compare data, and reenter.

LPRF806E
NO FAILURE LOG RECORDED.
A attempt to call the LPRLOG frame is rejected because no failure log is recorded (failure not detected). S: Continues processing. O: No action.

LPRF807I
FRAME--POLICY INTERFACE ERROR. RC=|reason code xxxx|.
An error with the given reason code has occurred on the interface between the frame control routine and the policy control routine. S: Suspends the specified operation. O: Report the message ID and the message text to the field engineer.

LPRF900E
HARDWARE ERROR WHILE SAVING PF KEY TEXT.
A hardware error has been detected on saving the PF key command texts into the LPAR control file. The SAVE operation for the PF key command texts has failed but other definition information remains valid. S: Suspends the specified operation. O: Report the message ID and the message text to the field engineer.

LPRR901E
HARDWARE ERROR WHILE SAVING LPAR CONFIGURATION INFORMATION.
A hardware error has been detected on saving the LPAR configuration information into the LPAR configuration file. The SAVE operation has failed. S: Suspends the specified operation. O: Report the message ID and the message text to the field engineer.

LPRM902S
SPECIFIED DATA SET NOT FOUND.
The specified data set (file) is not found. S: Suspends the read operation. O: Retry the suspended operation by entering a correct data set name.

© COMPAREX Informationssysteme GmbH

LPRM903E
SVP FILE ACCESS ERROR: HARDWARE FAILURE.
A hardware failure has caused an SVP file access error. S: Suspends the read operation. O: Report the message ID and the message text to the field engineer.

LPRM904I
PATCH FILE DOES NOT EXIST.
Online patch is not executable because no patch file exists. S: Suspends the specified operation. O: Have the field engineer abort the online patch session.

LPRM905A
PATCH FILE NOT VERIFIED.
Online patch is not executable because the subject patch file is not verified. S: Suspends the specified operation. O: Have the field engineer verify the patch file on the VRFY frame, and let him/her retry the suspended operation.

LPRM906W
PATCH FILE READ ERROR.
An error is detected on reading the patch file. S: Suspends the specified operation. O: Report the message ID and the message text to the field engineer, and let him/her abort the online patch session.

LPRM907E
NO RESPONSE FROM CF IN [GROUPx]LPARmm.
To an online patch query command, no response from HCCFA running on the [LPAR Group x] LPAR mm is returned within the system-defined time. Suspected is a failure in HCCFA, or a temporary system stop caused by inadvertent selection of the Stop key function during the command execution. An LPAR Group number is indicated only on a processor model operating in 2-IOCDS mode. S: Suspends the specified operation. O: Report the message ID and the message text to the field engineer because there may be a failure in HCCFA running on the subject LPAR.

LPRM908U
TIME MACHINE SERVICE CODE READ ERROR.
A file read error is detected while loading Service Code (special code for processing of Time Machine). This message only applies to a processor model on which Time Machine is available. S: Cancels loading of Service Code. O: Have the field engineer stop the attempt of Service Code loading.

LPRM909I
SERVICE CODE LOADED.
Service Code (special code for processing of Time Machine) has been loaded successfully. This message only applies to a processor model on which Time Machine is available. S: Continues processing. O: No action.

© COMPAREX Informationssysteme GmbH

LPRL911W
DEACTIVATION FAILURE: HARDWARE ERROR.
A hardware error during the LPAR deactivation is detected. S: Continues processing. O: Report the message ID and the message text to the field engineer.

LPRL912W
ALARM BELL ACTIVATION FAILED: HARDWARE ERROR.
A hardware error on activating the alarm bell is detected and no sound has resulted. S: Aborts the alarm bell activation. O: Report the message ID and the message text to the field engineer.

LPRL913W
HARDWARE ERROR DETECTED DURING LPAR CLEAR RESET.
A hardware error during LPAR clear reset has been detected. S: Continues processing. O: Report the message ID and the message text to the field engineer.

LPRL914E
HARDWARE ERROR DETECTED DURING LPAR ACTIVATION.
A hardware error during LPAR activation has been detected. S: Continues processing. O: Report the message ID and the message text to the field engineer.

LPRM950U
MLPF INITIALIZATION FAILED: DUPLICATED LPAR NAME (|LPAR name xxxxxxxx|).
MLPF initialization processing with 2-IOCDS mode specified has failed because the selected pair of active SCDS files assign the same LPAR name (in parentheses). This message applies only to a processor model capable of 2-IOCDS mode operation. S: Suspends the MLPF initialization. O: Specify 1-IOCDS mode and retry the MLPF initialization. Otherwise, select an active SCDS pair with all unique LPAR names, and retry the MLPF initialization.

© COMPAREX Informationssysteme GmbH