AT&T PRACTICE
Provisional

Task Oriented Practice
(TOP)

OFFICE EQUIPMENT

3"ESS" SWITCH
(GENERIC SO-2 AND 3E3)

Copyright ©1984 AT&T Technologies
All Rights Reserved

Printed in U.S.A.

Issue 3	AUG 1984
233-142-100	TPG
TITLE PAGE	000

FIND YOUR JOB IN THE LIST BELOW	THEN GO TO
3A CC Control Unit and System Status – Display Panels – Check	NTP-016
7A Recorded Announcement Set – Miscellaneous Frame – Service	NTP-005
Acceptance	NTP-002
Alarms; Office – Check	NTP-004
Announcement – 7A or 13A Announcement Set – Record	NTP-006
Backup Tape Cartridge – Cartridge Tape Transport – Update	NTP-015
Bootstrap; Off-line – 3E3 Generic or Later – Perform	NTP-009
Bootstrap; Off-line – SO-2 Generic – Perform	NTP-003
Cartridge Tape Transport (Minirecorder) – Maintenance Frame – Service	NTP-007
Clock; System – Check	DLP-525
Coin Control Circuit (SD-3H411-01 [CPS-FB423]) – Add	NTP-010
Dial Pulse Receiver Circuit (SD-3H410-01) – Add	NTP-013
Dial Pulse Transmitter Circuit (SD-3H403-01) – Add	NTP-017
Display Panels – System Status and 3A CC Control Unit – Check	NTP-016
Generic Patch – 3E3 Generic or Later – Install	NTP-018
Generic Patch – SO-2 Generic – Install	NTP-019
Ground Start – Network Frame – Strap	NTP-020
Loop Start – Network Frame – Strap	NTP-020
Minirecorder (Cartridge Tape Transport) – Maintenance Frame – Service	NTP-007

FIND YOUR JOB IN THE LIST BELOW	THEN GO TO
Multifrequency Receiver Circuit (SD-3H402-01) – Add	NTP-022
Multifrequency Transmitter Circuit (SD-3H404-01) – Add	NTP-023
Office Alarms – Check	NTP-004
Off-line Bootstrap – 3E3 Generic or Later – Perform	NTP-009
Off-line Bootstrap – SO-2 Generic – Perform	NTP-003
Patch; Generic – 3E3 Generic or Later – Install	NTP-018
Patch; Generic – SO-2 Generic – Install	NTP-019
Record Announcement on 7A or 13A Announcement Set	NTP-006
Recorded Announcement Set; 7A – Miscellaneous Frame – Service	NTP-005
Regular Ringing Circuit (SD-3H410-01) – Add	NTP-024
Remote Recording – 7A or 13A Announcement Circuit (SD-3H411-01 [CPS-FB426 for 7A or CPS-FB686 for 13A]) – Add	NTP-048
Superimposed Ringing Circuit (SD-3H406-01) – Add	NTP-025
System Clock – Check	NTP-525
System Status and 3A CC Control Unit – Display Panels – Check	NTP-016
Tape Cartridge (Backup) – Cartridge Tape Transport – Update	NTP-015
Tape Transport; Cartridge (Minirecorder) – Maintenance Frame – Service	NTP-007
Test Voltages – Trunk and Line Test Panel – Check	NTP-523
Tone and Announcement Circuit (SD-3H411-01 [CPS-FB383]) – 7A or 13A Announcement – Add	NTP-026
Tone and Announcement Circuit (SD-3H411-01 [CPS-FB383]) – Tone Operation – Add	NTP-027
Touch-Tone Receiver Circuit (SD-3H401-01 and SD-3H410-01) – Add	NTP-028

FIND YOUR JOB IN THE LIST BELOW	THEN GO TO
Translations – Reallocate	NTP-029
Transmission Levels – Trunk – Measure	NTP-011
Transmission and Noise Levels – Trunk – Measure	NTP-012
Transmission Measuring Equipment – Milliwatt Reference Generator and 23CR Set – Calibrate	NTP-014
Trunk and Line Test Panel – Test Voltages – Check	DLP-523
Universal Trunk Circuit – Add	NTP-030
Update Backup Tape Cartridge	NTP-015

The acceptance tasks are procedures done to verify that new equipment has been installed properly and is operating as intended. Acceptance procedures precede any work performed to place the equipment in service.

Documents stored in the office useful in acceptance task procedures include: Input/Output Manuals (IM/OMs), Schematic Diagrams (SDs), Program Applications (PAs), Program Listings (PRs), and Bell System Practices (BSPs).

TABLE A contains an alphabetical list of the acceptance tasks and corresponding procedure numbers necessary for accepting office equipment. Acceptance tasks can be performed in a random order or sequenced according to any local circumstances. Procedures for accepting office power are in Volume 233-144-100. Refer all trouble encountered during the performance of the acceptance procedures to the installation group.

TABLE A	
ACCEPTANCE TASKS	PROCEDURE NUMBER
Alarms; Office – Accept	NTP-041
Autoconnect Facility – Check	DLP-536
Automatic Message Accounting Recording Service (AMARS) – Accept	NTP-044
Backup Tapes – Check	NTP-008
Backup TTY Controller – Maintenance Frame – Check	NTP-042
CAMA Trunk – Charging Capabilities – Check	NTP-038
Coin Control Circuits – Accept	NTP-039
Display Panel – 3A CC Control Unit – Accept	NTP-045
Display Panel – System Status – Accept	NTP-046
Half Office Test – Perform	NTP-036
Hashsums – Check	NTP-021
Line-Up Tests – Trunk Circuit – Perform	NTP-034
Longitudinal Voltage Measurements – Make	NTP-043
Network Fabric Exercises – Perform	NTP-032
Nightly Routine – Diagnostics Test Results – Check	DLP-565
Office Routing Capability – Check	NTP-037
Office-to-Office Tests – Perform	NTP-040
Operational Volume Tests – Procedures and Results – Observe	NTP-033
Recorded Announcement Set – Functional Capability – Check	NTP-047
System Initialization – Ability – Check	NTP-035
Test Calls – Special and Custom Calling Features – Perform	–
Test Circuits Not Tested by Diagnostics – Test Frame – Check	NTP-031

DO THE ITEMS BELOW IN THE ORDER LISTED		FOR DETAILS, GO TO
	NOTE: The TAPE AUDIT required during this procedure requires approximately 2.5 hours (minimum) per tape to run and may take longer depending on traffic. Other Multiscan Functions are not possible while TAPE AUDIT is in process	
1	Obtain the Following Support Apparatus • Cloth (KS-2423) • Cleaning solvent (94% [or 91%] isopropyl alcohol and cleaning pad) • Vacuum cleaner (KS-14377,L5)	–
2	At System Status Panel, Verify **SYSTEM NORMAL** Lamp is ON	–
3	Remove Cartridge Tape Transport Unit 1 (Minirecorder) From Service	DLP-684
4	Perform Tape Diagnostics on Tape 1	DLP-685
5	Remove Cartridge Tape Transport Unit 0 (Minirecorder) From Service	DLP-684
6	Perform Tape Diagnostics on Tape 0	DLP-685
7	Update Translation Files	DLP-681
8	Prepare System for Off-Line Bootstrap Procedure	DLP-675
9	Verify Generic Hashsums Using Broadcast Warning Message (BWM)	DLP-676
10	Calculate Translation Hashsums	DLP-677
11	Print Translation Hashsums	DLP-678
12	Power Down Off-Line Control Unit by Depressing **POWER** Key on 3A Central Control Panel	–
13	Power Up Off-Line Control Unit by Depressing **POWER** Key on 3A Central Control Panel	–
14	Perform Off-Line Bootstrap	DLP-686
15	Verify Generic Hashsums Using Previous Values	DLP-693
16	Verify Translation Hashsums Using Previous Values	DLP-694
17	Perform Post Off-Line Bootstrap Procedures	DLP-689
18	Remove Cartridge Tape Transport Unit 1 (Minirecorder) From Service	DLP-684

DO THE ITEMS BELOW IN THE ORDER LISTED	FOR DETAILS, GO TO
19 Remove Tape Cartridge from TDC1 and Label with Time and Date	DLP-695
20 Clean Tape Cartridge Head Assembly and Chassis	DLP-687
21 Depress **TDC POWER** to Restore Power to Tape Unit	–
22 Obtain Backup Tape Cartridge and Insert into CTT 1	–
23 Perform Tape Diagnostics on Tape 1	DLP-685
24 Perform Tape Audit on Tape 1 (Copy Data from Tape 0 to Tape 1)	DLP-709

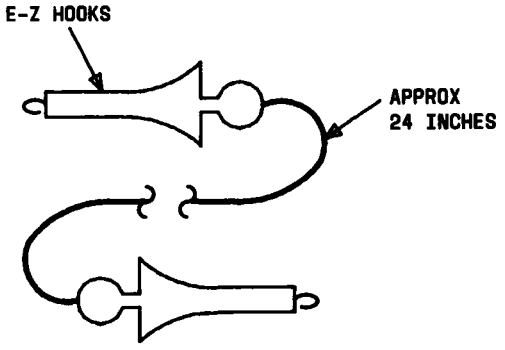

FIG. 1 – Test Cord

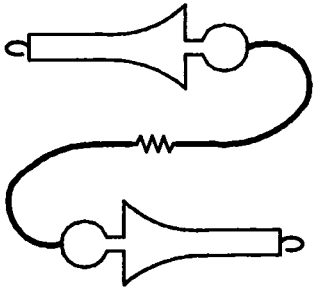

FIG. 2 – Test Cord With 300-Ohm to 1000-Ohm Resistor in Cord

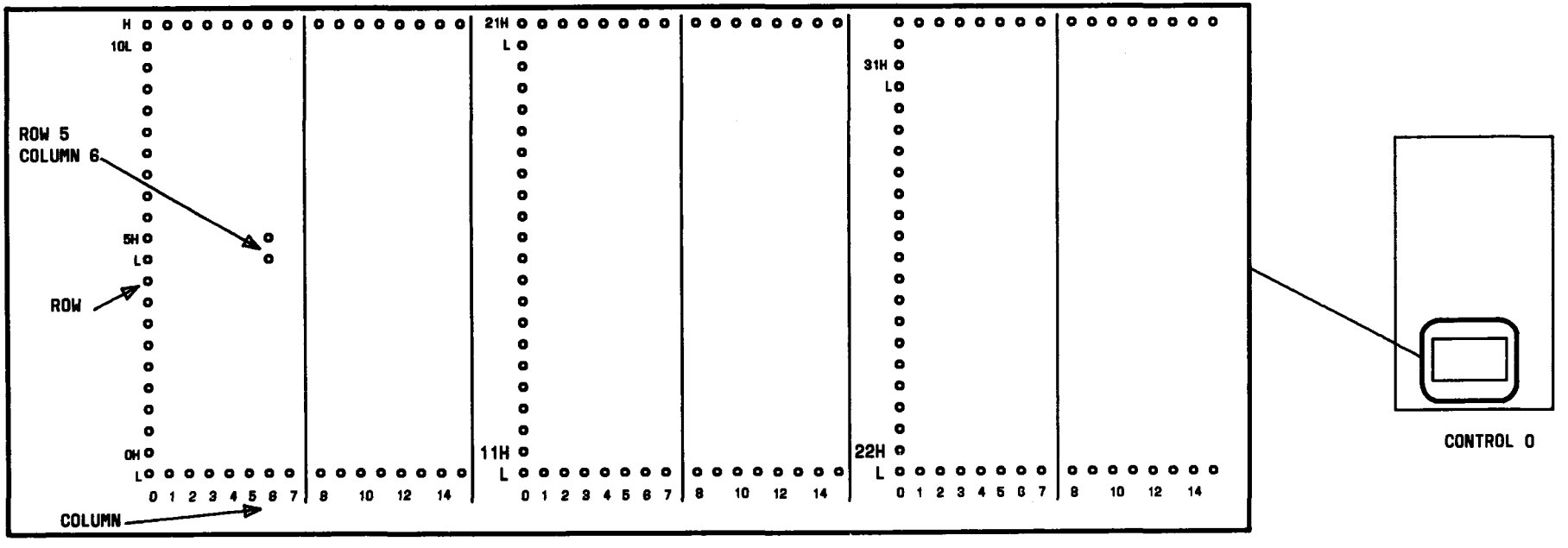

FIG. 3 – Master Scanner Terminal Strip Numbering Scheme

CHECK OPERATION OF OFFICE ALARMS

DO THE ITEMS BELOW IN THE ORDER LISTED	FOR DETAILS, GO TO
1 Obtain Support Apparatus Listed Below • One Test Cord (See FIG. 1) • One Test Cord (See FIG. 2) • 300-Ohm to 1000-Ohm Resistor • Ohmmeter (KS-14510 or Equivalent)	–
2 Notify Switching Control Center of Alarm Testing	–
3 At System Status Panel (SSP), Depress **ALARM CONTROL – ALARM TRFR** Until It Extinguishes	–
4 See FIG. 3 for Master Scanner Terminal Numbering Scheme	–
5 Check Operation of Power Alarms in the Following Order	
1. Test AC Distribution Alarm	DLP-577
2. Test Commercial Power Failure Alarm	DLP-580
3. Test Alarm Battery Alarm	DLP-581
4. Test Toll Distribution Alarm	DLP-582
6 From Office Records Form ESS 3506 (Alarm Monitor Data Table) Identify and Record Row and Column (Point) of Scan Point Numbers Assigned to the Following Building Alarms: • High Water and Sump Pump Failure • High or Low Temperature and Air Conditioning • High or Low Humidity • Intrusion	–
7 Check Operation of Available Building Alarms in the Following Order	
1. Test High Water and Sump Pump Failure Alarm	DLP-597
2. Test High or Low Temperature and Air Conditioning Alarm	DLP-597
3. Test High or Low Humidity Alarm	DLP-597
(Continued on Page 3)	

DO THE ITEMS BELOW IN THE ORDER LISTED	FOR DETAILS, GO TO
7 (Contd) 4. Test Intrusion alarm	DLP-597
5. Test Fire alarm	DLP-598
8 Check Maintenance Frame Alarms in the Following Order	
1. Test TTY Controller Out-Of-Service Alarm	DLP-599
2. Test Tape Data Controller Major Power Alarm	DLP-600
3. Test Maintenance Frame Converter Out-of-Limits Alarm	DLP-601
4. Test System Status Panel Fuse Alarm	DLP-602
9 Check Ringing and Tone (RT) Plants 0 and 1 Alarms in the Following Order	
1. Test Manual Override – Forced Alarm	DLP-603
2. Test Ringer Voltage Inverter Alarm	DLP-604
3. Test Fuse Alarm	DLP-605
4. Test Touch-Tone Low Voltage Alarm	DLP-606
5. Test Low Tone Voltage Alarm	DLP-607
6. Test Audible Ring Alarm	DLP-608
7. Test High Tone Low Voltage Alarm	DLP-609
8. Test Call Waiting Low Voltage Alarm	DLP-611
10 Check Network Frame Office Alarms in the Following Order	
1. Test Fuse Alarm For Trunks, Junctors, and Service Circuits	DLP-621
2. Test Line Ferrod Fuse Alarm	DLP-622
3. Test Battery Boost Power Alarm	DLP-623
11 Check Processor Alarms in the Following Order	
1. Test Bay 0 Major Power Alarm	DLP-624
2. Test Bay 0 Minor Power Alarm	DLP-625
(Continued on Page 4)	

CHECK OPERATION OF OFFICE ALARMS

DO THE ITEMS BELOW IN THE ORDER LISTED	FOR DETAILS, GO TO
11 (Contd) 3. Test Bay 1 Major Power Alarm	DLP-626
4. Test Bay 1 Minor Power Alarm	DLP-627
12 Check Miscellaneous Power Frame Alarms in the Following Order	
1. Test +24V Converter Fuse Alarm	DLP-635
2. Test +24V Converter Failure Alarm	DLP-636
3. Test +48V Converter Fuse Alarm	DLP-638
4. Test +48V Converter Failure Alarm	DLP-639
5. Test +48V Converter Manual Off Alarm	DLP-642
6. Test ±130V Converter Fuse Alarm	DLP-644
7. Test ±130V Converter Failure Alarm	DLP-646
8. Test ±130V Converter Manual Off Alarm	DLP-650
13 Notify Switching Control Center of Alarm Verification Completion	–
14 Depress **ALARM CONTROL – ALARM TRFR**	–

DO THE ITEMS BELOW IN THE ORDER LISTED	FOR DETAILS, GO TO
1 Obtain the Following Support Apparatus • Cloth (KS-2423) • Cleaner-Lubricant (KS-16328, L2) • Oil (KS-16326, L1) • Oil Can (486A) • Brush (KS-14164)	–
2 Type **RMV:SVC (a, b)!** a = Group Number of Recorded Announcement Set b = Member of Recorded Announcement Set	–
3 Remove Power from Recorded Announcement Set (Disconnect Power Cord)	–
4 Remove Dust Cover from Recorded Announcement Set	–
5 Clean Recorded Announcement Set	DLP-560
6 Lubricate Recorded Announcement Set	DLP-561
7 Check Belts for Wear and Tension	DLP-562
8 Check Magnetic Head for Wear	DLP-554
9 Replace Dust Cover	–
10 Restore Power to Recorded Announcement Set (Connect Power Cord)	–
11 Type **RST:SVC (a, b)!**	–
12 Depending on Generic, Activate Trunk and Line Test Panel (TLTP) Using Method A or B	–
A. In Offices With 3E3 Generic or Later, Depress **ON** Key at TLTP	–
B. In Offices With SO-2 Generic, Activate TLTP	DLP-578
13 Set Up TLTP for Testing Recorded Announcement Circuit	DLP-579
14 Check Recording for Clarity	DLP-563
15 Repeat Step 2 Through Step 11 for Remaining Recorded Announcement Sets	–

DO THE ITEMS BELOW IN THE ORDER LISTED	FOR DETAILS, GO TO
1 Obtain the Following Support Apparatus • 52-Type Head Telephone Set	–
2 Depending on Announcement System, Record Announcement Using Method A or B	
A. Record Announcement At 7A Announcement Set	DLP-652
B. Record Announcement At 13A Announcement Set By Following Directions on Front Panel of 13A Announcement Set or Using Section 201-519-301	–

DO THE ITEMS BELOW IN THE ORDER LISTED	FOR DETAILS, GO TO
NOTE: The TAPE AUDIT required during this procedure requires approximately 2.5 hours (minimum) per tape to run and may take longer depending on traffic. Other Multiscan Functions are not possible while TAPE AUDIT is in process	
1 Obtain the Following Support Apparatus • Cloth (KS-2423) • Cleaning Solvent (94% [or 91%] isopropyl alcohol and cleaning pad) • Vacuum cleaner (KS-14377, L5) • Orange stick (KS-6320) • Flashlight	–
2 Remove Cartridge Tape Transport from Service	DLP-684
3 Remove Cartridge From Cartridge Tape Transport	DLP-695
4 Clean Cartridge Tape Transport Head Assembly and Chassis	DLP-687
5 Inspect Cartridge Tape Transport for Wear	DLP-688
6 Depress **TDC POWER** to Restore Power to Cartridge Tape Transport	–
7 Replace Cartridge	–
8 Perform Tape Diagnostics	DLP-685
9 Perform Tape Audit	DLP-709

DO THE ITEMS BELOW IN THE ORDER LISTED	FOR DETAILS, GO TO
NOTES: 1. Perform check of backup tapes during a period of minimum recent change activity because this procedure will block all recent change activity 2. The TAPE AUDIT required during this procedure requires approximately 45 minutes (minimum) per tape to run. Other Multiscan Functions are not possible while TAPE AUDIT is in process 3. All offices must have at least six good tapes in office at all times 4. All tapes should be marked with current generic and date of last update 5. A Broadcast Warning Message (BWM) log should be kept identifying BWMs on each tape	
1 Obtain the Following Support Apparatus • Cloth (KS-2423) • Cleaning Solvent (94% [or 91%] Isopropyl Alcohol) NOTE: TEXPAD-Manufactured by Texwipe, Hillsdale, N.J. 07642 Will Eliminate the Need of the Cloth and Solvent • Vacuum Cleaner (KS-14377, L5)	–
2 At System Status Panel, Verify **SYSTEM NORMAL** Lamp is ON	–
3 Remove Cartridge Tape Transport Unit 1 (Minirecorder) From Service	DLP-684
4 Perform Tape Diagnostics on Tape 1	DLP-685
5 Remove Cartridge Tape Transport Unit 0 (Minirecorder) From Service	DLP-684
6 Perform Tape Diagnostics on Tape 0	DLP-685
7 Update Translation Files	DLP-681
8 Verify Hashsum Values Using Broadcast Warning Message (BWM)	DLP-549
9 Perform Off-Line Bootstrap (All Recent Change Activity Will be Blocked During This Step)	DLP-551
10 Verify Hashsum Values Using Previous Values	DLP-552
11 Remove Cartridge Tape Transport Unit 1 (Minirecorder) From Service	DLP-684
12 Remove Tape Cartridge From TDC 1 and Label per Notes 4 and 5	DLP-695
13 Clean Tape Cartridge Head Assembly and Chassis	DLP-687
14 Depress **TDC POWER** to Restore Power to Tape Unit	–

CHECK BACKUP TAPES

DO THE ITEMS BELOW IN THE ORDER LISTED	FOR DETAILS, GO TO
15 Obtain Backup Tape Cartridge and Insert into CTT1	-
16 Perform Tape Diagnostics on Tape 1	DLP-685
17 Perform Tape Audit on Tape 1 (Copy Data from Tape 0 to Tape 1)	DLP-709
18 Repeat from Step 11 for Each Backup Tape	-

DO THE ITEMS BELOW IN THE ORDER LISTED	FOR DETAILS, GO TO
NOTES: 1. Perform off-line bootstrap during a period of minimum recent change activity because this procedure will block all recent change activity 2. The TAPE AUDIT required during this procedure requires approximately 45 minutes (minimum) per tape to run and may take longer depending on traffic. Other Multiscan Functions are not possible while TAPE AUDIT is in progress	
1 Obtain the Following Support Apparatus • Cloth (KS-2423) • Cleaning Solvent (94% [or 91%] Isopropyl Alcohol) NOTE: TEXPAD-Manufactured by Texwipe, Hillsdale, N.J. 07642 Will Eliminate the Need of the Cloth and Solvent • Vacuum Cleaner (KS-14377, L5)	–
2 At System Status Panel, Verify **SYSTEM NORMAL** Lamp is ON	–
3 Remove Cartridge Tape Transport Unit 1 (Minirecorder) From Service	DLP-684
4 Perform Tape Diagnostics on Tape 1	DLP-685
5 Remove Cartridge Tape Transport Unit 0 (Minirecorder) From Service	DLP-684
6 Perform Tape Diagnostics on Tape 0	DLP-685
7 Update Translation Files	DLP-681
8 Verify Hashsum Values Using Broadcast Warning Message (BWM)	DLP-549
9 Perform Off-Line Bootstrap (All Recent Change Activity Will be Blocked During This Step)	DLP-551
10 Verify Hashsum Values Using Previous Values	DLP-552
11 Remove Cartridge Tape Transport Unit 1 (Minirecorder) From Service	DLP-684
12 Remove Tape Cartridge From TDC1 and Label with Time and Date	DLP-695
13 Clean Tape Cartridge Head Assembly and Chassis	DLP-687
14 Depress **TDC POWER** to Restore Power to Tape Unit	–
15 Obtain Backup Tape Cartridge and Insert Into CTT 1	–

DO THE ITEMS BELOW IN THE ORDER LISTED		FOR DETAILS, GO TO
16	Perform Tape Diagnostics on Tape 1	DLP-685
17	Perform Tape Audit on Tape 1 (Copy Data From Tape 0 to Tape 1)	DLP-709

DO THE ITEMS BELOW IN THE ORDER LISTED	FOR DETAILS, GO TO
1 Identify the Following Parameters for the Coin Control Circuit to be Installed: Trunk Group Number (GRP 071) Member Number (TER) Office Equipment Number (OE) Scan Point Number (SP) Distributor Triplet (DP) Mounting Location for Coin Control Circuit Equipment Frame Equipment Frame Level (EQL) Circuit Pack (FB 423) Position (0-3) at EQL	–
A. All Offices May Obtain Parameter Information From Circuit Order or Office Records Form ESS 3201	–
B. If Office Has 3E3 or Later Generic, Parameter Information May Be Obtained from Office Records by Typing the Following on MC TTY OP:OFR/ FORM 3201/ HDR YES/ GRP 071/ TER ALL/ END! AND OP:OFR/ FORM 3171/ HDR YES/ OE ALL/ END!	–
2 At Distributing Frame, Locate Office Equipment Terminals (OE)	DLP-710
3 At Distributing Frame, Install Wiring for Coin Control Circuit	DLP-649
4 Install Coin Control Circuit Pack FB 423 in Assigned Position at Equipment Frame	–
5 Add Coin Control Circuit	DLP-653
6 Put Coin Control Circuit into Service	DLP-550
7 Update Office Records per Local Procedures	–

DO THE ITEMS BELOW IN THE ORDER LISTED	FOR DETAILS, GO TO
1 Obtain Following Support Apparatus • Two 3P6E Cords • 1024 B Headset • 23A Portable Transmission Measuring Set (TMS)	–
2 Obtain Test Number from Distant Office for Transmission Testing	–
3 Depending on Generic, Activate Trunk and Line Test Panel (TLTP) Using Method A or B	–
A. In Offices with 3E3 or Later Generic, Depress **ON** Key	–
B. In Offices with SO-2 Generic, Activate TLTP	DLP-578
4 Set Up Trunk Circuit to TLTP for Testing. Select One of the Following Procedures for Type of Trunk	–
A. For Outgoing or Two-Way Trunk Circuits, Key in Test Number as Digits to be Outpulsed in Keying Format	DLP-579
B. For Incoming Trunk Circuits Have Distant Office Dial Directory Number Assigned to TLTP Access Trunk 1	–
C. For Trunk Circuits Which Connect to ACD (Automatic Call Distribution) Trunks	–
1. Obtain J94742A Test Set	–
2. Condition J94742A Test Set	DLP-575
3. Set Trunk Circuit Up to TLTP **ACCESS TRUNK 1**	DLP-579
D. For Intercept Trunks or Directory Assistance Trunks Not Connecting to ACD Trunks, Key in Special Code as Digits to be Outpulsed in Keying Format	DLP-579
E. For Operator Verification Trunks Have Distant Office Dial Directory Number Assigned to TLTP **ACCESS TRUNK 1**	–
5 At TLTP Depress **TRMT 1** Key	–
6 Make 1000 Hz Transmission Level Measurements	DLP-568
7 At TLTP Release **TRMT 1** Key	–
8 Release J94742A Test Set From TLTP if Connected	–

MEASURE TRUNK TRANSMISSION LEVELS

DO THE ITEMS BELOW IN THE ORDER LISTED	FOR DETAILS, GO TO
9 Release Circuit from TLTP	–
A. Make Circuit Available for Service – Depress **ACTIVE IDLE**, then **RELEASE** 1 Key	–
B. Make Circuit Unavailable for Service – Depress **OUT OF SERVICE**, then **RELEASE** 1 Key	–
10 Repeat Steps 2 Through 9 on Every Trunk to be Tested	–

DO THE ITEMS BELOW IN THE ORDER LISTED	FOR DETAILS, GO TO
1 Obtain the Following Support Apparatus • 3A Portable Noise Measuring Set • Two 3P6E Cords • 1024 B Headset • 23A Portable Transmission Measuring Set (TMS)	–
2 Obtain Test Number from Distant Office for Transmission Testing	
3 Depending on Generic, Activate Trunk and Line Test Panel (TLTP) Using Method A or B	–
A. In Offices with 3E3 or Later Generic, Depress **ON** Key at TLTP	–
B. In Offices with SO-2 Generic, Activate TLTP	DLP-578
4 Set Up Trunk Circuit to TLTP for Testing. Select One of the Following Procedures for Type of Trunk	–
A. For Outgoing or Two-Way Trunk Circuits, Key in Test Number as Digits to be Outpulsed in Keying Format	DLP-579
B. For Incoming Trunk Circuits, Have Distant Office Dial Directory Number Assigned to TLTP **ACCESS TRUNK 1**	–
C. For Trunk Circuits Which Connect to ACD (Automatic Call Distribution) Trunks	–
1. Obtain J94742A Test Set	–
2. Condition J94742A Test Set	DLP-575
3. Set Trunk Circuit up to TLTP **ACCESS TRUNK 1**	DLP-579
D. For Intercept Trunks or Directory Assistance Trunks Not Connecting to ACD Trunks, Key in Special Code as Digits to be Outpulsed in Keying Format	DLP-579
E. For Operator Verification Trunks, Have Distant Office Dial Directory Number Assigned to TLTP **ACCESS TRUNK 1** Key	–
5 At TLTP Depress **TRMT 1** Key	–
6 Make 1000 Hz Transmission Level Measurements	DLP-568
7 Condition 3A Noise Measuring Test Set	DLP-683

MEASURE TRUNK TRANSMISSION AND NOISE LEVELS

DO THE ITEMS BELOW IN THE ORDER LISTED	FOR DETAILS, GO TO
8 Make Noise Level Measurements	DLP-570
9 At TLTP Release **TRMT** 1 Key	–
10 Release J94742A Test Set from TLTP if Connected	DLP-576
11 Release Circuit from TLTP	–
A. Make Circuit Available for Service – Depress **ACTIVE IDLE**, then **RELEASE** 1 Key	–
B. Make Circuit Unavailable for Service – Depress **OUT OF SERVICE**, then **RELEASE** 1 Key	–
12 Repeat Steps 2 Through 11 on Every Trunk to be Tested	

DO THE ITEMS BELOW IN THE ORDER LISTED	FOR DETAILS, GO TO
1 Identify the Following Parameters for the Customer Dial Pulse Receiver (CDPR) to be Installed: Trunk Group Number (GRP 065) Member Number (TER) Office Equipment Number (OE) Supervisory Scan Point Number (SP) Distributor Triplet (DP) Mounting Location for CDPR Circuit Pack (FB 367) Equipment Frame (Network or Control) Equipment Frame Level (EQL) Circuit Pack Position at EQL	–
A. All Offices May Obtain Parameter Information from Circuit Order or Office Records Form ESS 3201	–
B. If Office Has 3E3 or Later Generic, Parameter Information May Be Obtained from Office Records by Typing the Following on MC TTY OP:OFR/ FORM 3201/ HDR YES/ GRP 065/ TER ALL/ END! AND OP:OFR/ FORM 3171/ HDR YES/ OE ALL/ END!	–
2 At Distributing Frame Identify CDPR Tip (DTO_) and Ring (DRO_) Terminations	DLP-640
3 At Distributing Frame Locate Office Equipment (OE) Terminations Indicated on Circuit Order	DLP-710
4 At Distributing Frame Cross-Connect CDPR Terminals (DTO_ and DRO_) to OE Terminals (T_ and R_)	–
5 Install CDPR Circuit Pack FB 367	–
6 Add CDPR Circuit	DLP-653
7 Put CDPR Circuit into Service	DLP-550
8 Update Office Records per Local Procedures	–

DO THE ITEMS BELOW IN THE ORDER LISTED		FOR DETAILS, GO TO
1	Obtain J94022A (22A) Milliwatt Reference Meter and 3P15A Cord Assembly	–
2	Verify that all Milliwatt Reference Generator Outlets are Properly Terminated (No Plugs or Cords in Milliwatt Reference Jacks)	–
3	Place 22A Meter in Horizontal Position and Calibrate per Instructions on Front Panel	–
4	Remove Faceplate Cover at Level 44	–
5	Calibrate Milliwatt Reference Generator	DLP-566
6	Calibrate 23CR Transmission Measuring Set on TLTP	DLP-567
7	Replace Faceplate Cover at Level 44	–

DO THE ITEMS BELOW IN THE ORDER LISTED	FOR DETAILS, GO TO
NOTE: The TAPE AUDIT required during this procedure takes approximately 2.5 hours (minimum) per tape to run and may take longer depending on traffic. Other Multiscan Functions are not possible while TAPE AUDIT is in process	
1 Obtain the Following Support Apparatus • Cloth (KS-2423) • Cleaning Solvent (94% [or 91%] isopropyl alcohol and cleaning pad) • Vacuum cleaner (KS-14377,L5)	
2 Update On-Line Tape Copies of Translations	DLP-699
3 Remove TDC 1 from Service	DLP-684
4 Remove Tape Cartridge from CTT of TDC 1 (CCT 1)	DLP-695
5 Clean CTT 1 Head Assembly and Chassis	DLP-687
6 Obtain Backup Tape Cartridge and Insert into CTT 1	–
7 Perform Tape Audit on Tape 1 (Copy Data from Tape 0 to Tape 1)	DLP-709
8 Remove TDC 1 from Service	DLP-684
9 Remove Updated Backup Tape Cartridge from CTT 1	DLP-695
10 Mark Cartridge for Identification as a Most Up-to-Date Backup Tape Cartridge	–
11 If More Backup Tape Cartridges are to be Updated Repeat from Step 6	–
12 Insert Tape Cartridge, which was set Aside in Step 4, into CTT 1	–
13 Type: **RST: TAPE 1!**	–

DO THE ITEMS BELOW IN THE ORDER LISTED	FOR DETAILS, GO TO
1 Obtain the Following Support Apparatus • KS-14510 Volt-Ohm Milliammeter (VOM) or Equivalent	–
2 Test System Status Panel Input Voltages	DLP-664
3 Test Lamps and LEDs on System Status Panel (SSP)	DLP-657
4 Test SSP System Control (SYC) 0 and SYC 1 Status Indicators	DLP-658
5 Test SSP Panel Time Out Function	DLP-659
6 Test **PASS**, **FAIL**, and **EXECUTE** Lamps	DLP-660
7 Test Peripheral Unit Status Display LEDs	DLP-661
8 Test Lamps at **STATUS** Section of Not Active 3A CC Control Unit	DLP-662
9 Test 3A CC Panel Status Functions and Indicators for Not Active 3A CC Control Unit	DLP-663
10 At SSP, Depress **LOCK** Key	–
11 At STATUS Section of Not Active 3A CC Depress **MANUAL** Key	–
12 Test LEDs and Switches of **REGISTER LOAD** and **DISPLAY** Function for Not Active 3A CC Control Unit	DLP-665
13 Test LEDs and Switches of **COMPARE** Function on Not Active 3A CC Control Unit	DLP-666
14 Test 3A CC Panel Memory Functions and Indicators	DLP-667
15 Test 3A CC Panel Enable Manual Parity Function and Indicator	DLP-668
16 Test 3A CC Panel Reject Function and Indicators	DLP-669
17 Test 3A CC Panel Step Function	DLP-672
18 Return 3A CC to Normal Operating Condition	DLP-670
19 At TTY Type **SW:SYC!** and Repeat Items 8 Through 18 for Untested 3A CC Panel	–

CHECK SYSTEM STATUS AND 3A CC CONTROL UNIT DISPLAY PANELS

DO THE ITEMS BELOW IN THE ORDER LISTED	FOR DETAILS, GO TO
1	Identify the Following Parameters for the Dial Pulse Transmitter Circuit to be Installed: Trunk Group Number (GRP 068) Member Number (TER) Office Equipment Number (OE) Supervisory Scan Number (SP) Directed Scan Point Number (DSP) Distributor Triplet (DP) Mounting Location for Circuit Pack FB 403 Equipment Frame (Misc Frame) Equipment Frame Level (EQL) Circuit Pack Position at EQL	–
	A. All Offices May Obtain Parameter Information from Circuit Order or Office Records Form ESS 3201	–
	B. If Office Has 3E3 or Later Generic, Parameter Information May Be Obtained from Office Records by Typing the Following on MC TTY **OP:OFR/ FORM 3201/ HDR YES/ GRP 068/ TER ALL/ END!** AND **OP:OFR/ FORM 3171/ HDR YES/ OE ALL/ END!**	–
2	At Distributing Frame Identify Dial Pulse Transmitter Circuit Tip (T_) and Ring (R_) Terminations [NOTE: These terminations must be identified at the Distributing Frame Connector Block stenciled T3H403-11]	–
3	At Distributing Frame Locate Office Equipment (OE) Terminations Indicated on Service Order	DLP-710
4	At Distributing Frame Cross-Connect Dial Pulse Transmitter Circuit T_ and R_ Terminations to OE Terminals (T_ and R_)	–
5	Install Circuit Pack FB 403	–
6	Add Dial Pulse Transmitter Circuit	DLP-653
7	Put Dial Pulse Transmitter Circuit into Service	DLP-550
8	Update Office Records per Local Procedures	–

DO THE ITEMS BELOW IN THE ORDER LISTED	FOR DETAILS, GO TO
NOTES: 1. Perform procedure during a period of minimum recent change activity because this procedure will block all recent change activity 2. The TAPE AUDIT required during this procedure requires approximately 45 minutes (minimum) per tape to run and may take longer depending on traffic. Other Multiscan Functions are not possible while TAPE AUDIT is in progress	
1 Obtain the Following Support Apparatus • Cloth (KS-2423) • Cleaning solvent (94% [or 91%] Isopropyl Alcohol) NOTE: (TEXPAD-Manufactured by Texwipe, Hillsdale, N.J., 07642 Will Eliminate the Need of the Cloth and Solvent) • Vacuum cleaner (KS-14377, L5)	–
2 Check Patch Status	DLP-548
3 Verify Generic Hashsum Values Using Broadcast Warning Message (BWM)	DLP-549
4 Install Generic Patch	DLP-679
5 At System Status Panel, Verify **SYSTEM NORMAL** Lamp is ON	–
6 Remove Cartridge Tape Transport Unit 1 (Minirecorder) From Service	DLP-684
7 Perform Tape Diagnostics on Tape 1	DLP-685
8 Remove Cartridge Tape Transport Unit 0 (Minirecorder) From Service	DLP-684
9 Perform Tape Diagnostics on Tape 0	DLP-685
10 Update Translation Files	DLP-681
11 Verify Generic Hashsum Values Using Broadcast Warning Message (BWM)	DLP-549
12 Perform Off-Line Bootstrap (All Recent Change Activity Will be Blocked During This Step)	DLP-551
13 Verify Hashsum Values Using Previous Values	DLP-552
14 Remove Cartridge Tape Transport Unit 1 (Minirecorder) From Service	DLP-684
15 Remove Tape Cartridge From TDC1 and Label With Time and Date	DLP-695

INSTALL GENERIC PATCH FOR OFFICES WITH 3E3 GENERIC OR LATER

DO THE ITEMS BELOW IN THE ORDER LISTED		FOR DETAILS, GO TO
16	Clean Tape Cartridge Head Assembly and Chassis	DLP-687
17	Obtain Backup Tape Cartridge and Insert Into CTT1	-
18	Perform Tape Diagnostics on Tape 1	DLP-685
19	Perform Tape Audit on Tape 1 (Copy Data From Tape 0 to Tape 1)	DLP-709

DO THE ITEMS BELOW IN THE ORDER LISTED	FOR DETAILS, GO TO
NOTE: The TAPE AUDIT required during this procedure requires approximately 2.5 hours (minimum) per tape to run and may take longer depending on traffic. Other Multiscan Functions are not allowed while TAPE AUDIT is in progress	
1 Obtain the Following Support Apparatus • Cloth (KS-2423) • Cleaning Solvent (94%[or 91%] Isopropyl Alcohol and Cleaning Pad) • Vacuum Cleaner (KS-14377, L5)	–
2 Check Patch Status	DLP-548
3 Verify Generic Hashsums Using Broadcast Warning Message (BWM)	DLP-676
4 Install Generic Patch	DLP-702
5 At System Status Panel, Verify **SYSTEM NORMAL** Lamp is ON	–
6 Remove Cartridge Tape Transport Unit 1 (Minirecorder) From Service	DLP-684
7 Perform Tape Diagnostics on Tape 1	DLP-685
8 Remove Cartridge Tape Transport Unit 0 (Minirecorder) From Service	DLP-684
9 Perform Tape Diagnostics on Tape 0	DLP-685
10 Update Translation Files	DLP-681
11 Prepare System for Off-Line Bootstrap Procedure	DLP-675
12 Verify Generic Hashsums Using Broadcast Warning Message (BWM)	DLP-676
13 Calculate Translation Hashsums	DLP-677
14 Print Translation Hashsums	DLP-678
15 Power Down Off-Line Control Unit by Depressing **POWER** Key on 3A CC Panel	–
16 Power Up Off-Line Control Unit by Depressing **POWER** Key on 3A CC Panel	–
17 Perform Off-Line Bootstrap	DLP-686
18 Verify Generic Hashsums Using Previous Values	DLP-693

INSTALL GENERIC PATCH FOR OFFICES WITH GENERIC SO-2

DO THE ITEMS BELOW IN THE ORDER LISTED		FOR DETAILS, GO TO
19	Verify Translation Hashsums Using Previous Values	DLP-694
20	Perform Post Off-Line Bootstrap Procedures	DLP-689
21	Remove Cartridge Tape Transport Unit 1 (Minirecorder) From Service	DLP-684
22	Remove Tape Cartridge From TDC 1 and Label with Time and Date	DLP-695
23	Clean Tape Cartridge Head Assembly and Chassis	DLP-687
24	Depress **TDC POWER** to Restore Power to Tape Unit	–
25	Obtain Backup Tape Cartridge and Insert into CTT 1	–
26	Perform Tape Diagnostics on Tape 1	DLP-685
27	Perform Tape Audit on Tape 1 (Copy Data From Tape 0 to Tape 1)	DLP-709

DO THE ITEMS BELOW IN THE ORDER LISTED	FOR DETAILS, GO TO
NOTE: All equipment is furnished with the loop start option. Only lines with the following switch and level number can be modified for ground start: SWITCH LEVEL(S) 0 7 1 6,7 2 6,7 3 7 4 7 5 6,7 6 6,7 7 7	
1 From Service Order, Identify Office Equipment (OE) Number to be Changed: OE gg cwsi: gg = concentrator group (1-15) (network frame number) c = concentrator (0-1) w = switch group (0-2) s = switch (0-7) i = input level (0-7)	–
2 At 296-6C Switch on Network Frame, Locate Line Sensor Coil to be Modified	DLP-524
3 Remove All Straps on Line Sensor Coil	–
4 Install Straps on Line Sensor Coil For Ground Start Line or Loop Start Line	DLP-526
5 Repeat Items 1 Through 4 for Strapping of Additional Lines	–

STRAP LINE FOR GROUND START OR LOOP START

DO THE ITEMS BELOW IN THE ORDER LISTED	FOR DETAILS, GO TO
NOTE 1: This procedure will block all recent change activity	
1 Check Patch Status	DLP-548
2 Verify All Hashsum Values	DLP-555

DO THE ITEMS BELOW IN THE ORDER LISTED	FOR DETAILS, GO TO
1 Identify the Following Parameters for the Multifrequency Receiver Circuit to be Installed: Trunk Group Number (GRP 066) Member Number (TER) Office Equipment Number (OE) Supervisory Scan Point Number (SP) Directed Scan Point Number (DSP) Distributor Triplet (DP) Mounting Location for Circuit Packs A260, A261, A262, A263, A152 (three), A264, A265, A266 Equipment Frame (Misc Frame) Equipment Frame Level (EQL) Circuit Pack Positions at EQL	–
A. All Offices May Obtain Parameter Information from Circuit Order or Office Records Form ESS 3201	–
B. If Office Has 3E3 or Later Generic, Parameter Information May Be Obtained From Office Records by Typing the Following on MC TTY OP:OFR/ FORM 3201/ HDR YES/ GRP 066/ TER ALL/ END! AND OP:OFR/ FORM 3171/ HDR YES/ OE ALL/ END!	–
2 At Distributing Frame Connector Block Stenciled per T3H402-11, Identify Multifrequency Receiver T- and R- Terminations	–
3 At Distributing Frame Locate Office Equipment (OE) Terminations Indicated on Service Order	DLP-710
4 At Multifrequency Receiver Circuit Packs Mounting Location, Remove Power (Power is Off When **PWR OFF** Key Lamp is Lighted)	–
5 At Distributing Frame Cross-Connect Multifrequency Receiver Circuit T- and R- Terminations to OE Terminals (T- and R-)	–
6 Install Circuit Packs A260, A261, A262, A263, A152 (three), A264, A265, A266	–
7 At Multifrequency Receiver Circuit Packs Mounting Location, Restore Power. (Power is Restored When **PWR OFF** Key Lamp is Extinguished)	–

ADD MULTIFREQUENCY RECEIVER CIRCUIT (SD-3H402-01)

DO THE ITEMS BELOW IN THE ORDER LISTED	FOR DETAILS, GO TO
8 Add Multifrequency Receiver Circuit	DLP-653
9 Put Multifrequency Receiver Into Service	DLP-550
10 Update Office Records per Local Procedures	-

DO THE ITEMS BELOW IN THE ORDER LISTED	FOR DETAILS, GO TO
1 Identify the Following Parameters for the Multifrequency Transmitter Circuit to be Installed: Trunk Group Number (GRP 067) Member Number (TER) Office Equipment Number (OE) Supervisory Scan Point Number (SP) Directed Scan Point Number (DSP) Distributor Triplet (DP) Mounting Location for Circuit Packs FB 362, FB 363, and FB 364 Equipment Frame (Misc Frame) Equipment Frame Level (EQL) Circuit Pack Positions at EQL	–
A. All Offices May Obtain Parameter Information from Circuit Order or Office Records Form ESS 3201	–
B. If Office Has 3E3 or Later Generic, Parameter Information May Be Obtained from Office Records by Typing the Following on MC TTY **OP:OFR/ FORM 3201/ HDR YES/ GRP 067/ TER ALL/ END!** AND **OP:OFR/ FORM 3171/ HDR YES/ OE ALL/ END!**	–
2 At Distributing Frame Identify Multifrequency Transmitter T- and R- Terminations	DLP-645
3 At Distributing Frame Locate Office Equipment (OE) Terminations Indicated on Service Order	DLP-710
4 At Distributing Frame Cross-Connect Multifrequency Transmitter Circuit T- and R- Terminations to OE Terminals (T- and R-)	
5 Install Circuit Packs FB 362, FB 363, and FB 364	
6 Add Multifrequency Transmitter Circuit	DLP-653
7 Put Multifrequency Transmitter Circuit into Service	DLP-550
8 Update Office Records per Local Procedures	–

ADD MULTIFREQUENCY TRANSMITTER CIRCUIT (SD-3H404-01)

DO THE ITEMS BELOW IN THE ORDER LISTED	FOR DETAILS, GO TO
1 Identify the Following Parameters for the Regular Ringing Circuit to be Installed: Trunk Group Number (GRP 069) Member Number (TER) Office Equipment Number (OE) Supervisory Scan Point Number (SP) Directed Scan Point Number (DSP) Distributor Triplet (DP) Mounting Location for Regular Ringing Circuit Packs (FB 358): Equipment Frame (Network or Control) Equipment Frame Level (EQL) Circuit Pack Position at EQL	–
A. All Offices May Obtain Parameter Information from Circuit Order or Office Records Form ESS 3201	–
B. If Office Has 3E3 or Later Generic, Parameter Information May Be Obtained from Office Records by Typing the Following on MC TTY OP:OFR/ FORM 3201/ HDR YES/ GPR 069/ TER ALL/ END! AND OP:OFR/ FORM 3171/ HDR YES/ OE ALL/ END!	–
2 At Distributing Frame Identify Regular Ringing Circuit Tip (T_) and Ring (R_) Terminations	DLP-643
3 At Distributing Frame Locate Office Equipment (OE) Terminations Indicated on Circuit Order	DLP-710
4 At Distributing Frame Cross-Connect Regular Ringing Circuit Terminals (T_, R_) to OE Terminals (T_, R_)	–
5 Install Regular Ringing Circuit Pack FB 358	–
6 Add Regular Ringing Circuit	DLP-653
7 Put Regular Ringing Circuit into Service	DLP-550
8 Update Office Records per Local Procedures	–

ADD REGULAR RINGING CIRCUIT (SD-3H410-01)

DO THE ITEMS BELOW IN THE ORDER LISTED	FOR DETAILS, GO TO
1 Identify the Following Parameters for the Superimposed Ringing Circuit to be Installed: Trunk Group Number (GRP 070) Member Number (TER) Office Equipment Number (OE) Supervisory Scan Point Number (SP) Directed Scan Point Number (DSP) Distributor Triplet (DP) Mounting Locations for Superimposed Ringing Circuit Packs (FB 375 and FB 376) Equipment Frame (Misc Frame) Equipment Frame Level (EQL) Circuit Pack Positions at EQL	–
A. All Offices May Obtain Parameter Information from Circuit Order or Office Records Form ESS 3201	–
B. If Office Has 3E3 or Later Generic, Parameter Information May Be Obtained from Office Records by Typing the Following on MC TTY OP:OFR/ FORM 3201/ HDR YES/ GRP 070/ TER ALL/ END! AND OP:OFR/ FORM 3171/ HDR YES/ OE ALL/ END!	–
2 At Distributing Frame Identify Superimposed Ringing Circuit Tip (T_) and Ring (R_) Terminations [NOTE: These terminations must be identified at the Distributing Frame Connector Block stenciled T3H406-11]	–
3 At Distributing Frame Locate Office Equipment (OE) Terminations Indicated on Service Order	DLP-718
4 At Distributing Frame Cross-Connect Superimposed Ringing Circuit T_ and R_ Terminations to OE Terminals (T_ and R_)	–
5 Install Circuit Packs FB 375 and FB 376	–
6 Add New Superimposed Ringing Circuit (Service Circuit)	DLP-653
7 Put Superimposed Ringing Circuit into Service	DLP-550
8 Update Office Records per Local Procedures	–

ADD SUPERIMPOSED RINGING CIRCUIT (SD-3H406-01)

DO THE ITEMS BELOW IN THE ORDER LISTED	FOR DETAILS, GO TO
1 Identify the Following Parameters for the Tone and Announcement Circuit to be Installed: Trunk Group Number (GRP) Two Member Numbers (TER) Two Office Equipment Numbers (OE) One Supervisory Scan Point Number Mounting Location for Tone and Announcement Circuit Pack Equipment Frame Equipment Frame Level Circuit Pack (FB 383) Position at EQL Mounting Location of 7A or 13A Announcement Machine on Miscellaneous Frame	–
A. All Offices May Obtain Parameter Information from Circuit Order Office Records Form ESS 3201	–
B. If Office Has 3E3 or Later Generic, Parameter Information May Be Obtained from Office Records by Typing the Following on MC TTY OP:OFR/ FORM 3201/ HDR YES/ GRP ALL/ TER ALL/ END! AND OP:OFR/ FORM 3171/ HDR YES/ OE ALL/ END!	–
2 At Distributing Frame, Locate Office Equipment Terminals (OE)	DLP-710
3 Install Wiring at Distributing Frame	DLP-647
4 Install Circuit Pack FB 383	–
5 Add Tone and Announcement Circuit. [NOTE: One message is required for each of the member numbers. The scan point number is used in the first message only]	DLP-653
6 Put Tone and Announcement Circuit into Service	DLP-550
7 Dial a Number Which Will Result in Connection to the Announcement	–
8 Update Office Records per Local Procedures	–

DO THE ITEMS BELOW IN THE ORDER LISTED	FOR DETAILS, GO TO
1 Identify the Following Parameters for the Tone and Announcement Circuit to be Installed: Trunk Group Number (GRP) Two Member Numbers (TER) Two Office Equipment Numbers (OE) Mounting Location for Tone and Announcement Circuit Equipment Frame Equipment Frame Level (EQL) Circuit Pack (FB 383) Position at EQL	–
A. All Offices May Obtain Parameter Information from Circuit Order or Office Records Form ESS 3201	–
B. If Office Has 3E3 or Later Generic, Parameter Information May Be Obtained from Office Records by Typing the Following on MC TTY **OP:OFR/ FORM 3201/ HDR YES/ GRP ALL/ TER ALL/ END!** AND **OP:OFR/ FORM 3171/ HDR YES/ OE ALL/ END!**	–
2 At Distributing Frame, Locate Office Equipment Terminals (OE)	DLP-710
3 Install Wiring at Distributing Frame	DLP-648
4 Install Circuit Pack FB 383	–
5 Add Tone and Announcement Circuit (NOTE: One Message is Required for Each of The Member Numbers. No Scan Point Number is Used)	DLP-653
6 Put Tone and Announcement Circuit into Service	DLP-550
7 Update Office Records per Local Procedures	–

DO THE ITEMS BELOW IN THE ORDER LISTED	FOR DETAILS, GO TO
1 Identify the Following Parameters for the TOUCH-TONE Receiver to be Installed: Trunk Group Number (GRP 064) Member Number (TER) Office Equipment Number (OE) Supervisory Scan Point Number (SP) Directed Scan Point Number (DSP) Distributor Triplet (DP) Mounting Location for CDPR Circuit Pack (FB 367) Equipment Frame (Network or Control Frame) Equipment Frame Level (EQL) Circuit Pack Position at EQL Mounting Location for TOUCH-TONE Detector Circuit Packs A118, A120, A121, A122, A123, A124, A946, A1025 Equipment Frame (Misc Frame) Equipment Frame Level (EQL) Circuit Pack Positions at EQL	–
A. All Offices May Obtain Parameter Information from Circuit Order or Office Records Form ESS 3201	–
B. If Office Has 3E3 or Later Generic, Parameter Information May Be Obtained from Office Records by Typing the Following on MC TTY OP:OFR/ FORM 3201/ HDR YES/ GRP 064/ TER ALL/ END! AND OP:OFR/ FORM 3171/ HDR YES/ OE ALL/ END!	–
2 At TOUCH-TONE Detector Circuit Packs Mounting Location, Remove Power (**PWR OFF** Key Lamp is Lighted when Power is Off)	–
3 At Distributing Frame Identify CDPR Tip (DTO_) and Ring (DRO_) Terminations	DLP-640
4 At Distributing Frame Identify TOUCH-TONE Detector Circuit Tip (T_) and Ring (R_) Terminations NOTE: These terminations must be identified at the Distributing Frame Connector Block stenciled T3H401-11	–

ADD TOUCH-TONE RECEIVER CIRCUIT (SD-3H401-01 AND SD-3H410-01)

DO THE ITEMS BELOW IN THE ORDER LISTED	FOR DETAILS, GO TO
5 At Distributing Frame Cross-Connect CDPR Terminations (DTO_ and DRO_) to TOUCH-TONE Detector Terminations (T_ and R_)	–
6 At Distributing Frame Locate OE Terminations Indicated on Circuit Order	DLP-710
7 At Distributing Frame Cross-Connect CDPR Terminations (DTO_ and DRO_) to OE Terminations (T_ and R_)	–
8 Install CDPR Circuit Pack FB 367 per CP Location	–
9 Install TOUCH-TONE Detector Circuit Packs A118, A120, A121, A122, A123, A124, A946, and A1025	–
10 At TOUCH-TONE Detector Circuit Packs Mounting Location, Restore Power (Power is on when **PWR OFF** Key Lamp is Extinguished)	–
11 Add TOUCH-TONE Receiver Circuit	DLP-653
12 Put TOUCH-TONE Receiver Circuit into Service	DLP-550
13 Update Office Records per Local Procedures	–

DO THE ITEMS BELOW IN THE ORDER LISTED		FOR DETAILS, GO TO
	NOTE: Reallocations involve taking the off-line SYC out of service	
1	Provide for an Attendant at Either 3ESS Switch or Switching Control Center	
2	From Circuit Order Identify Translators to be Reallocated	–
	CAUTION: Schedule reallocations to be performed during a period of light traffic in case a memory reload must be performed due to system failure	
3	Notify Service Order Bureau of Schedule and Request That No TTY Messages be Input During Reallocation	–
4	Update Tape Copies of Translation	DLP-699
5	Perform Reallocation Procedures	DLP-700
6	Notify Service Order Bureau That Reallocation is Complete	–
7	Allow System to Soak (Operate) for at Least 24 Hours With New Translation Layout	–
8	Verify Success of System Soak	DLP-538

DO THE ITEMS BELOW IN THE ORDER LISTED	FOR DETAILS, GO TO
1 Obtain the Following Support Apparatus • KS-19353, L1 Oscillator • 23A Transmission Test Set • 3A Noise Measuring Test Set	–
2 Identify the Following Parameters for the Universal Trunk Circuit to be Installed Using Method A or B Trunk Group Number (GRP) Member Number (TER) Office Equipment Number (OE) Equipment Location (EQL) Circuit Code (CKT) Scan Point Number (SP) Distributor Triplet (DP) Circuit Pack (FBXXX)	
A. In All Offices Parameters May be Obtained From Office Records Form ESS 3201 or Circuit Order	–
B. If Office Has 3E3 or Later Generic, Parameter Information May Be Obtained From Office Records by Typing the Following on MC TTY OP:OFR/ FORM 3201/ HDR YES/ GRP ALL/ END! AND OP:OFR/ FORM 3171/ HDR YES/ OE ALL/ END!	–
3 At Distributing Frame Install Wiring for Trunk Circuit	DLP-637
4 Install Universal Trunk Circuit Pack in Assigned Slot of Equipment Frame	–
5 Add New Trunk Circuit	DLP-653
6 At Maintenance TTY, Type DGN:TRK (a,b)! a = GRP, b = TER	–
7 Depending on Generic, Activate Trunk and Line Test Panel (TLTP) Using Method A or B	–
A. Activate TLTP in Offices with SO-2 Generic	DLP-578
B. Activate TLTP in Offices with 3E3 or Later Generic. Depress ON Key on TLTP	–

DO THE ITEMS BELOW IN THE ORDER LISTED	FOR DETAILS, GO TO
8 Set Up Trunk Circuit TLTP for Testing Using Access Trunk 1	DLP-579
9 At TLTP Depress **TRMT** 1 Key	–
10 Contact Distant Office to Set Up Schedule for Transmission Level Test	–
11 Measure 1000 Hz Transmission Levels	DLP-568
12 Condition Portable KS-19353, L1 Oscillator	DLP-682
13 Make Slope Gain Measurements	DLP-569
14 Condition Portable 3A Noise Measuring Set	DLP-683
15 Make Noise Level Measurements	DLP-570
16 At TLTP Release **TRMT** 1 Key	–
17 Release Circuit from TLTP	
A. Make Circuit Available for Service. Depress **ACTIVE IDLE**, then **RELEASE** 1 Key	–
B. Make Circuit Unavailable for Service. Depress **OUT OF SERVICE**, then **RELEASE** Key	
18 At Maintenance TTY Type: RST:TRK (a,b)! a = GRP, b = TER	–
19 Update Office Records per Local Procedures	–

DO THE ITEMS BELOW IN THE ORDER LISTED	FOR DETAILS, GO TO
1 Obtain The Following Support Apparatus • E-Z Hook Clip Leads • 900-Ohm Resistor • Oscilloscope (Tektronix Model 465) • Voltage Probe (Tektronix P6006)	–
2 Depending on Generic, Activate Trunk and Line Test Panel (TLTP)	–
A. Activate TLTP in Office with SO-2 Generic	DLP-578
B. Activate TLTP in Office with 3E3 Generic by Depressing **ON** key	–
3 Check Trunk and Line Test Panel Test Voltages	DLP-523
4 Set Up Trunk and Line Test Panel for Testing Dial Pulse Receiver Test Circuit on Access Trunk 1 (Use Trunk Group Number 111 and Member Number 005)	DLP-579
5 Test Operation of Dial Pulse Receiver Test Circuit	DLP-533
6 Set Up Trunk and Line Test Panel for Testing Transmission Test Termination Circuit on Access Trunk 1 (Use Trunk Group Number 111 and Member Number 006)	DLP-579
7 Test Operation of Transmission Test Termination Circuit	DLP-534
8 Set Up Trunk and Line Test Panel for Testing Loop Environment Test Circuit on Access Trunk 1 (Use Trunk Group Number 111 and Member Number 003)	DLP-579
9 Test Operation of Loop Environment Test Circuit	DLP-541
10 Set Up Trunk and Line Test Panel for Testing Touch-Tone Receiver Test Circuit on Access Trunk 1 (Use Trunk Group Number 111 and Member Number 008)	DLP-579
11 Condition Oscilloscope	DLP-712
12 Test Operation of Touch-Tone Receiver Test Circuit	DLP-571
13 Test Operation of Station Ringer Test Circuit	DLP-539

DO THE ITEMS BELOW IN THE ORDER LISTED	FOR DETAILS, GO TO
14 Test Operation of Automatic Line Insulation Test (ALIT) Circuit Using One of the Following Methods:	–
A. Verify Tests Performed by Installation Group Using Western Electric Handbook 269, Section 544	–
B. Perform Following Tests:	–
1. Verify ALIT Short or Ring to Ground Test Capability	DLP-572
2. Verify ALIT Tip or Ring to Ground Test Capability	DLP-573
3. Verify ALIT Foreign EMF Test Capability	DLP-574

DO THE ITEMS BELOW IN THE ORDER LISTED	FOR DETAILS, GO TO
1 Verify That Diagnostic Tests Have Been Successfully Completed on All Network Controllers and Scanner Controllers	–
2 Verify Both SYCs; One Should Be Active, the Other in Standby	–
3 Verify That All Keys on SSP are Nonoperated	–
4 Exercise Network	DLP-542

PERFORM NETWORK FABRIC EXERCISES

DO THE ITEMS BELOW IN THE ORDER LISTED	FOR DETAILS, GO TO
1 Obtain the Following Support Apparatus • Speed Call 8 Load Boxes	
2 Verify That All Change Notices (CNs) Are Installed for Program Issue Being Used at Cutover	–
3 Verify That All Error Detection Systems and All TTYs Are Enabled During Test Periods	–
4 Initialize System From System Status Panel Using Stable Clear (Level 5)	DLP-613
5 Observe Procedures and Results of Maintenance Volume Tests	DLP-628
6 Check and Reset System Clock to Correct Time	DLP-525
7 Initialize System From System Status Panel Using Stable Clear (Level 5)	DLP-613
8 Observe Procedures and Results of Simulated Commercial Power Failure Tests	DLP-629
9 Observe Procedures and Results of Integrated Volume Tests	DLP-546
10 File Copies of Test Results (Form SD-97-1313 and SD-97-1315) Provided by the Installer and Retain for at Least 30 Days after Cutover	–

DO THE ITEMS BELOW IN THE ORDER LISTED	FOR DETAILS, GO TO
1 Obtain the Following Support Apparatus • Portable KS-19353, L1 Oscillator • Portable 23A Transmission Measuring Set • Portable 3A Noise Measuring Set • Two 3P6E Cords • 1024 B Headset	–
2 Obtain Test Numbers from Distant Office for Transmission Testing	–
3 Verify Number of Trunk Circuits Installed Using Office Records, Form E3202-3	–
4 Depending on Generic, Activate Trunk and Line Test Panel (TLTP) Using Method A or B	–
A. In Offices with 3E3 or Later Generic, Depress **ON** Key at TLTP	DLP-578
B. In Offices with SO-2 Generic, Activate TLTP	–
5 Set Up Trunk Circuit to TLTP for Testing Using One of the Following Procedures:	–
A. For Outgoing or Two-Way Trunk Circuits, Key in Test Number as Digits to be Outpulsed in Keying Format	DLP-579
B. For Incoming Trunk Circuits, Have Distant Office Dial Directory Number Assigned to TLTP Access Trunk 1	–
C. For Trunk Circuits Which Connect to ACD (Automatic Call Distribution) Trunks	–
1. Obtain J94742A Test Set	–
2. Condition J94742A Test Set	DLP-575
3. Set Up Trunk Circuit to TLTP **ACCESS TRUNK 1**	DLP-579
D. For Intercept Trunks or Directory Assistance Trunks Not Connecting to ACD Trunks, Key in Special Code as Digits to be Outpulsed in Keying Format	DLP-579
(Continued on Page 2)	

DO THE ITEMS BELOW IN THE ORDER LISTED	FOR DETAILS, GO TO
5 (Contd) E. For Operator Verification Trunks, Have Distant Office Dial Directory Number Assigned to TLTP **ACCESS TRUNK** 1 Key	–
6 At TLTP Depress **TRMT** 1 Key	
7 Measure 1000 Hz Transmission Levels (Circuit Net Loss)	DLP-568
8 Condition KS-19353, L1 Oscillator	DLP-682
9 Make Gain-Slope Measurements	DLP-569
10 Set Up 3A Noise Measuring Set	DLP-683
11 Make Noise Level Measurements	DLP-570
12 At TLTP Release **TRMT** 1 Key	–
13 Release J94742A Test Set From TLTP if Connected	DLP-576
14 Release Circuit from TLTP	–
A. If Circuit is to be Made Available for Service, Depress **ACTIVE IDLE**, then **RELEASE** 1 Key	–
B. If Circuit is to be Made Unavailable for Service – Depress **OUT OF SERVICE**, then **RELEASE** 1 Key	–
15 Repeat Tests From Step 3 on Every Trunk Circuit Installed	–

DO THE ITEMS BELOW IN THE ORDER LISTED	FOR DETAILS, GO TO
1 Verify That **SYSTEM NORMAL** Lamp on SSP is Lighted	–
2 On MC TTY Type OP:DATA;CURR!	–
3 Initialize System From SSP Using Manual Transient Clear	DLP-612
4 Initialize System From SSP Using Stable Clear	DLP-613
5 Initialize System From SSP Using Memory Reload	DLP-614
6 Initialize System From SSP Using Past Office Data	DLP-615
7 Initialize System From SSP Using Backdate Office Data	DLP-616
8 Initialize System From 3A CC Panel, Program Timer Timeout Check	DLP-617
9 On MC TTY Type SW:SYC!	–
10 Initialize System From 3A CC Panel, Program Timer Timeout Check	DLP-617
11 Initialize System From 3A CC Panel, Error Register Bit Set Check	DLP-618
12 Verify that System Switched CUs While Performing Step 10	–
13 Initialize System From SSP Using Memory Reload (Reload Current Memory)	DLP-614
14 Reset System Clock	DLP-525

CHECK ABILITY OF SYSTEM TO INITIALIZE

DO THE ITEMS BELOW IN THE ORDER LISTED	FOR DETAILS, GO TO
NOTE: This test should be made prior to installing the protectors in CDF. The office must be in the cutover mode	
1 Obtain the Following Support Apparatus • 1014A Test Set • ITE-4674 Test Set	
2 Obtain a List of All Assigned Directory Numbers (Subscriber Lines) and Their Associated Cable and Pair, OE, and Class of Service from Service Order Assignment Group	–
3 Identify all Ground Start Lines	–
4 Test for Dial Tone from Every Subscriber Line	DLP-704
5 Make a List of Random-Sampled Subscriber Lines Consisting of all Classes of Service [10% of Total]	–
6 Make Call Termination and Ringing Polarity Test of Subscriber Lines Selected in Step 5	DLP-705
7 If Error Rate of Test in Step 6 is More Than 1%, Select a Second Sample and Repeat Step 6	–

DO THE ITEMS BELOW IN THE ORDER LISTED		FOR DETAILS, GO TO
1	Test Routing to all NXX Codes in the Immediate Dialing Area	DLP-630
2	Repeat Step 1 on Each Class of Service	–
3	Test Routing to all NPA (Area) Codes	DLP-631
4	Test Routing to 3-Digit (411, 611, 911) Service Codes	–

CHECK CAPABILITY OF OFFICE ROUTING

DO THE ITEMS BELOW IN THE ORDER LISTED	FOR DETAILS, GO TO
1 Establish Schedule to Test CAMA Trunks with CAMA Office and Accounting Department	–
2 Obtain 7-Digit Test Number at CAMA Office Location	–
3 Verify Number of CAMA Trunks Installed in Office Records, Form 3202-3	–
4 Prepare Log to List all Test Calls Dialed (See FIG. 1)	–
5 Make All Trunks Busy	DLP-610
6 Place Test Call on CAMA Trunk	DLP-671
7 Make Test Call to a Busy Number	DLP-692
8 Restore all CAMA Trunks to Service One at a Time Using TTY Message RST:TRK aaa,bbb;UCL! aaa = Trunk Group Number, bbb = Member Number	–
9 Make Test Call to Toll Directory Information (1+555-1212)	–
10 Make Test Call to Test for Billing in Different Area Code Location	–
11 Make Test Call to CAMA Office Test Number from 4-or 8-Party Line	–
12 Verify That all Calls Have Been Listed on Test Log	–
13 Verify Accuracy of Toll Billing Between Accounting Departments Billing Records and Test Log	–

CAMA BILLING TEST LOG DATE: _____

Telephone No. Originating Call	Telephone Number Dialed	Time Call Made	Time of Disconnect	Duration of Call in Minutes	Busy	No Answer	Wrong Number (List Number Reached)

FIG. 1

CHECK CAMA TRUNK CHARGING CAPABILITIES

DO THE ITEMS BELOW IN THE ORDER LISTED	FOR DETAILS, GO TO
1 Install Single Slot Coin Telephone in Vicinity of the TLTP. Build Loop Resistance to Maximum 1300 Ohms and Station Ground Resistance to 50 Ohms	–
2 Determine From Office Records, Form ESS 3201-1, the Number of Coin Control Circuits Installed	–
3 Remove From Service All Coin Control Circuits Except One Circuit Using TTY Message RMV:SVC aaa,bbb! aaa = Trunk Group Number, bbb = Member Number	–
4 Make Local Charge Test	DLP-632
5 Check for Refund After Abandon Call	DLP-633
6 Check Stuck Coin Alarm Operation	DLP-634
7 If Equipped for Local Overtime Charging, Check Overtime Charging Feature	DLP-654
8 Perform the Following Tests on the Type of Coin Control Circuits Installed	–
A. Coin First Coin Control Circuits	–
1. Make Partial Dial Test	DLP-655
2. Make Local Operational Tests with the Operator	DLP-656
B. Dial Tone First Coin Control Circuits	–
1. Check Recorded Announcement for Partial Deposit	DLP-690
2. Make Local Operational Tests with the Operator	DLP-691
9 Remove From Service the Coin Control Circuit Just Tested Using TTY Message RMV:SVC aaa,bbb! aaa = Trunk Group Number, bbb = Member Number	–
10 Restore to Service a Different Coin Control Circuit Using TTY Message RST:SVC aaa,bbb;UCL! aaa = Trunk Group Number, bbb = Member Number	–
11 Repeat Steps 4 Through 10 Until Every Coin Control Circuit Has Been Tested	–

DO THE ITEMS BELOW IN THE ORDER LISTED	FOR DETAILS, GO TO
1 Obtain a Trunk Circuit Pack FB-429	–
2 Plug Trunk Circuit Pack FB-429 into a Spare Universal Trunk Circuit Slot	–
3 Add New Trunk Circuit	DLP-706
4 Establish Test Circuit Between Old and New Offices	DLP-711
5 On MC TTY Type **ALW:TOCO!**	–
6 On MC TTY Type **SET:PRECUT!**	–
7 Install Protectors on CDF (Heat Coils or Cut Through Devices)	–
8 Verify that all Service Orders are Up-to-Date and are Input to Recent Change	–
9 Verify that Cross-Connections are Run for all Service Orders	–
10 On MC TTY Type **EX:OTO(nxx,xxxx,yyyy),GLP!** nxx = The Office Code xxxx = The First Telephone Number to be Tested yyyy = The Last Telephone Number to be Tested	–
11 Analyze MC TTY Trouble Printouts and Correct Faults	DLP-707
12 Verify that all Telephone Numbers have been Tested	DLP-708
13 On MC TTY Type **ABT:MSF!**	–
14 Remove Trunk Circuit Installed in Step 3	DLP-696
15 Remove Circuit Pack FB-429 Installed in Step 2	–
16 Remove CDF Cross-Connections Installed in Step 4	–

PERFORM OFFICE-TO-OFFICE TESTS

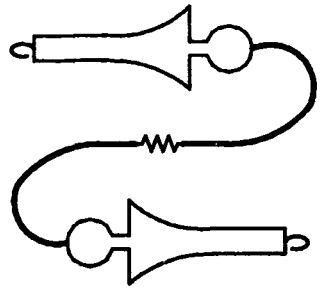

FIG. 1 – Test Cord With 300-Ohm to 1000-Ohm Resistor in Cord

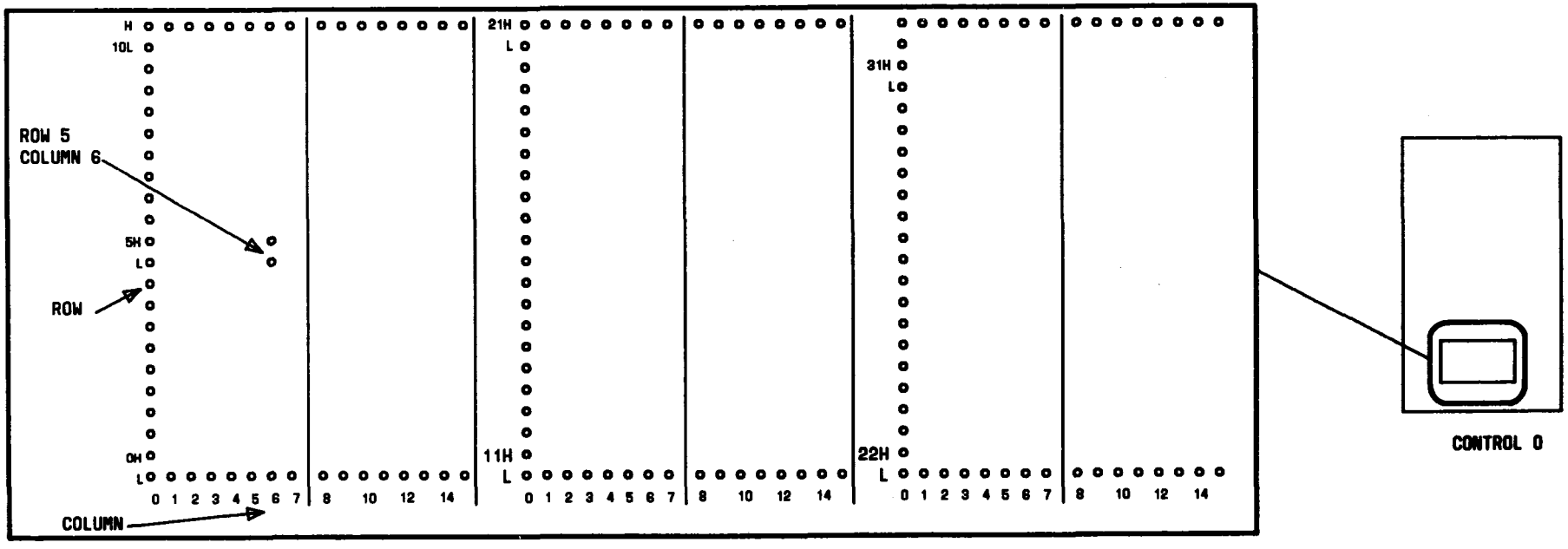

FIG. 2 – Master Scanner Terminal Strip Numbering Scheme

Issue 3	AUG 1984
233-142-100	NTP
PAGE 1 of 2	041

ACCEPT OFFICE ALARMS

DO THE ITEMS BELOW IN THE ORDER LISTED	FOR DETAILS, GO TO
1 Obtain the Following Support Apparatus • One Test Cord (See FIG. 1) • 300-Ohm to 1000-Ohm Resistor	–
2 Notify Switching Control Center of Alarm Acceptance Testing	–
3 On SYSTEM STATUS PANEL Depress **ALARM CONTROL-ALARM TRFR** Until It Extinguishes	–
4 Obtain Open Type 70 Fuse	–
NOTE: See FIG. 2 for Master Scanner Terminal Numbering Scheme	
5 Test FIRE Alarm	DLP-500
6 Test TAPE DATA CONTROLLER POWER Alarm	DLP-501
7 Test TTY CONTROLLER POWER Alarm	DLP-502
8 Test SYSTEM STATUS PANEL POWER Alarm	DLP-503
9 Test SYSTEM STATUS PANEL POWER Status Switching	DLP-504
10 Test EMERGENCY LINE TRANSFER Status	DLP-505
11 Test MAINTENANCE FRAME CONVERTER LIMIT Alarm	DLP-506
12 Test TRUNK, JUNCTOR, and SERVICE CIRCUIT FUSE Alarm	DLP-507
13 Test LINE FERROD FUSE Alarm	DLP-508
14 Test CONTROL UNIT 0 POWER Alarm	DLP-509
15 Test CONTROL UNIT 1 POWER Alarm	DLP-510
16 On SSP Depress **ALARM TRFR**	–
17 Notify Switching Control Center of Testing Completion	–

DO THE ITEMS BELOW IN THE ORDER LISTED	FOR DETAILS, GO TO
1 Depending on Teletypewriter Type, Check Operation of Backup TTY Controller	
A. For 35 ASR Type	–
1. Switch Local Teletypewriter From Maintenance TTY Controller (TTYC 0) to Backup TTY Controller (TTYC 1)	DLP-619
2. Verify That Local TTY is Operational While Using Backup TTY Controller	–
3. Switch Local Teletypewriter From Backup TTY Controller (TTYC 1) to Maintenance TTY Controller (TTYC 0)	DLP-528
B. For 43A Type	–
1. Switch Local Teletypewriter From Maintenance TTY Controller (TTYC 0) to Backup TTY Controller (TTYC 1)	DLP-527
2. Verify That Local TTY is Operational While Using Backup TTY Controller	–
3. Switch Local Teletypewriter From Backup TTY Controller (TTYC 1) to Maintenance TTY Controller (TTYC 0)	DLP-556

DO THE ITEMS BELOW IN THE ORDER LISTED	FOR DETAILS, GO TO
NOTE: If an oscilloscope is not available, use an RMS type digital multimeter, isolated from ground	–
1 Obtain a 1370-Ohm Resistor and One of the Following Type Test Sets	–
A. Tektronix Oscilloscope Type 465 and a Tektronix P6011 Voltage Probe	–
B. Hickok Model 3310 Digital Multimeter (DMM) must be a True RMS Meter, Isolated From Ground	–
2 On Combined Distributing Frame (CDF), Remove Protectors From Cable Pair (Subscriber Line) to be Tested	–
3 Connect 1370-Ohm Resistor in Series Between the Ring Side of Line and –48 Volt Battery	
4 Measure Longitudinal Voltage Using One of the Following Test Sets	–
A. Oscilloscope	–
1. Condition Oscilloscope	DLP-712
2. Measure Longitudinal Voltage Using Oscilloscope	DLP-697
B. Digital Multimeter	DLP-698
5 Remove 1370-Ohm Resistor Connected in Step 4	–
6 Replace Protectors Removed in Step 2	–
7 Repeat From Step 2 on all Ground Start Lines	–

DO THE ITEMS BELOW IN THE ORDER LISTED	FOR DETAILS, GO TO
NOTE : Revenue loss may occur on calls during performance of this procedure	
1 Update Tape Copies of Translations	DLP-699
2 Inhibit Maintenance Functions	DLP-511
3 Set AMA Buffer to 100 Words	DLP-512
4 Type in the Following: **RC:OFFICE/** **AMA:YES/** **END!**	–
5 Depress **TTY INIT**	–
6 Prepare Log to List All Test Calls Dialed (See FIG. 1)	–
7 Notify AMARC to Monitor Test Line(s) Billing	–
8 Test Billing of Calls Into Local Test Line	DLP-513

(Continued on Page 2)

AMARC BILLING TEST LOG DATE _____

Telephone No. Originating Call	Telephone Number Dialed	Time Call Mode	Time of Disconnect	Duration of Call in Minutes	Custom Calling Feature(s)	Notes Busy, No Answer, Wrong Number, etc

FIG. 1

DO THE ITEMS BELOW IN THE ORDER LISTED	FOR DETAILS, GO TO
9 Test Billing of Calls Into Regular Hold Trunk Line	DLP-514
10 Test Billing of Calls From Private Message-Rate Line Through All Trunk Groups	DLP-515
11 Test Billing of Miscellaneous Calls	DLP-516
12 Test Time Release Disconnect Billing	DLP-517
13 Test Custom Calling Features Billing	DLP-518
14 Test Switch to Backup Data Link	DLP-519
15 Repeat Items 7 Through 12 for Testing of Backup Facility	–
16 Test Switch to Primary Link	DLP-520
17 Type in the Following: RC:OFFICE/ AMA:YES/ END!	–
18 Depress **TTY INIT**	–
19 Reconfigure Software Message Area	DLP-521
20 Allow Maintenance Functions	DLP-522
21 Type in the Following: RC:OFFICE/ AMA:YES/ END!	–
22 Depress **TTY INIT**	–
23 Notify AMARC of Start Billing Time	–
24 Type in OP:DATA;CURR! to Place Translations on Tape Current File	–
NOTE: System can fall back to original translations by initializing using PAST OFFICE DATA	
25 Soak System for at Least One Full Day	–
26 Update Tape Copies of Translations	DLP-699
(Continued on Page 3)	

DO THE ITEMS BELOW IN THE ORDER LISTED	FOR DETAILS, GO TO
27 Notify Service Bureau of the Following:	–
A. Line Software Registers can be Removed	
B. Normal Toll Calls can be Routed Through Network Rather Than TSPS or CAMA Office	
C. Recent Changes on Message Rate Lines do not Need Message Register Index	

DO THE ITEMS BELOW IN THE ORDER LISTED		FOR DETAILS, GO TO
1	Condition System Controller for Testing	DLP-584
2	Depress and Hold **LAMP TEST** to Test **STATUS** Lamps at Not Active 3A Central Control Panel	–
3	At Not Active 3A Central Control Panel Verify All Switches Are In Down Position	–
4	Test Control Unit **STATUS** Functions and Indicators	DLP-585
5	Test Loading and Displaying of Registers	DLP-586
6	Test **COMPARE** Indicator	DLP-587
7	Test **MEMORY** Functions and Indicators	DLP-588
8	Test **ENABLE MANUAL PAR** (Parity) Functions and Indicator	DLP-589
9	Test **REJECT** Function and Indicator	DLP-590
10	Test **STEP** Function	DLP-591
11	Restore System to Normal Operating Condition	DLP-592
12	Type in **SW:SYC!**	–
13	Repeat Steps 1 Through 11 for Other Control Unit	–

ACCEPT 3A CENTRAL CONTROL UNIT DISPLAY PANEL

DO THE ITEMS BELOW IN THE ORDER LISTED		FOR DETAILS, GO TO
1	Diagnose System Status Panel Controller	DLP-593
2	Test System Status Panel Indicators	DLP-594
3	Test System Status Panel Power Controls	DLP-595
4	Test PANEL TIME OUT Function	DLP-596

DO THE ITEMS BELOW IN THE ORDER LISTED		FOR DETAILS, GO TO
1	If No Announcements Have Been Recorded, Record a Test Announcement Using Method A or B	–
	A. Record Announcement at 7A Announcement Set	DLP-652
	B. Record Announcement at 13A Announcement Set by Following Directions on Front Panel of 13A Announcement Set or Using Section 201-519-301	–
2	Depending On Generic, Activate Trunk and Line Test Panel (TLTP) Using Method A or B	–
	A. In Offices with 3E3 Generic or Later, Depress **ON** Key at TLTP	–
	B. In Offices with SO-2 Generic Activate TLTP	DLP-578
3	Set Up TLTP for Testing Recorded Announcement Circuit	DLP-579
4	Perform Clarity Check on Recorded Announcement	DLP-537
5	At TLTP, Depress **ON** Key to Deactivate	–

DO THE ITEMS BELOW IN THE ORDER LISTED	FOR DETAILS, GO TO
1 Identify the Following Parameters for the Remote Recording of Announcement Circuit to be Installed: Trunk Group Number (GRP) Member Number (TER) Office Equipment Number (OE) Supervisory Scan Point Number (SP) Directed Scan Point Number (DSP) Distributor Triplet (DP) Mounting Location for Announcement Circuit Equipment Frame Equipment Frame Level (EQL) Circuit Pack [(FB 426 for 7A) or (FB 686 for 13A)] Position at EQL Mounting Location of 7A or 13A Announcement on Miscellaneous Frame Trigger Number	–
A. All Offices May Obtain Parameter Information from Circuit Order or Office Records Form ESS 3201	–
B. If Office Has 3E3 or Later Generic, Parameter Information May Be Obtained From Office Records by Typing the Following on MC TTY OP:OFR/ FORM 3201/ HDR YES/ GRP ALL/ TER ALL/ END! AND OP:OFR/ FORM 3171/ HDR YES/ OE ALL/ END!	–
2 At Distributing Frame, Locate Office Equipment Terminals (OE)	DLP-710
3 At Distributing Frame, Install Wiring for Remote Recording of Announcement Circuit	DLP-651
4 Depending on Announcement System, Install Remote Recording of Announcement Circuit Pack in Assigned Slot of Equipment Frame	–
A. For 7A Announcement Set, Install Circuit Pack FB 426	–
B. For 13A Announcement Set, Install Circuit Pack FB 686	–

DO THE ITEMS BELOW IN THE ORDER LISTED		FOR DETAILS, GO TO
5	Add Remote Recording of Announcement Circuit	DLP-653
6	Put Remote Recording of Announcement Circuit into Service	DLP-550
7	Request Remote Location to Verify Operation of Announcement Circuit	–
8	Update Office Records per Local Procedures	–

[1] Has **FB 425** in Control Frame 0 been changed

Yes

[5] Does audible alarm sound for other office alarms

Yes

[7] Check translations per TAP-113

No

No

[6] Inspect wiring per TAD-111

[2] Remove fuse **OFAL** [FIG. 1]

[3] Replace **FB 425** in Control Frame 0, Bay 1 (44-44) with new circuit pack

AND

[4] Replace fuse **OFAL**

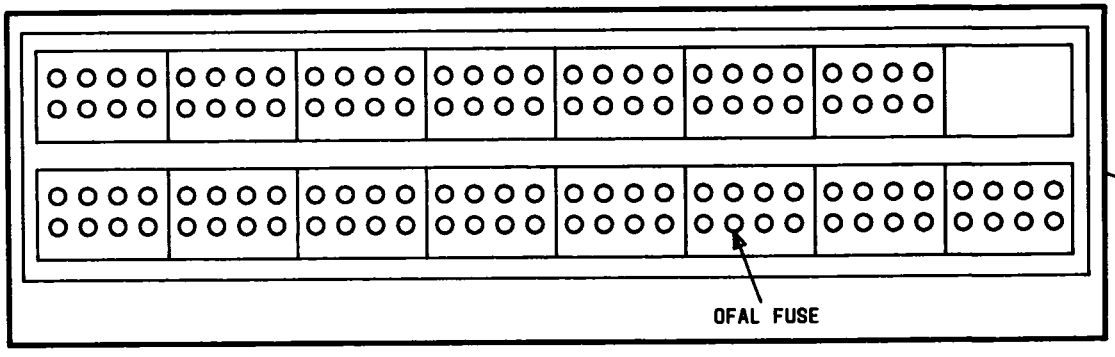

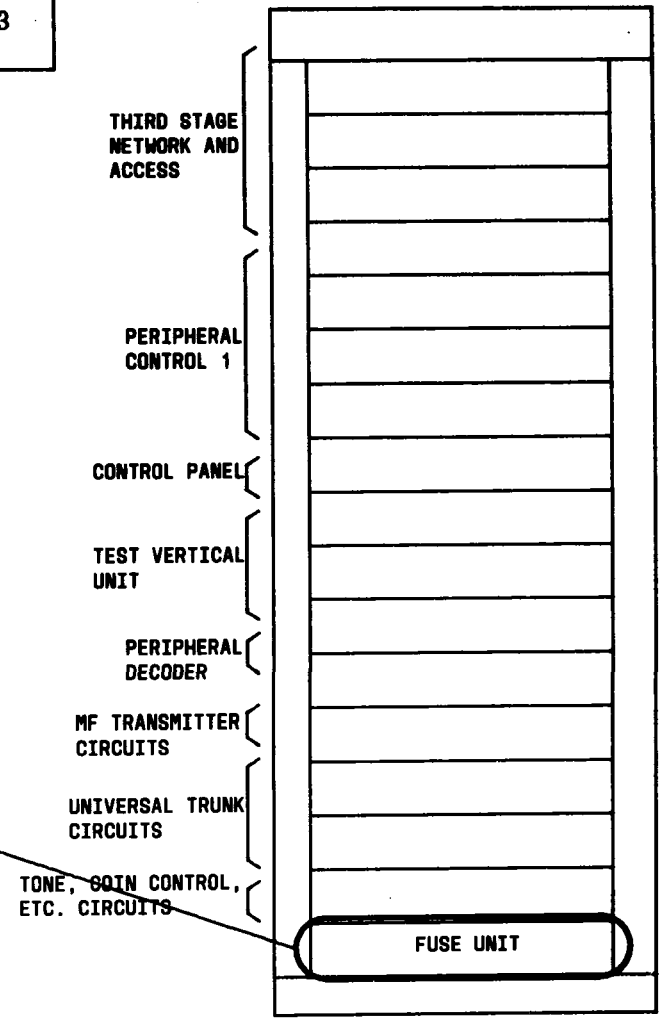

FIG. 1 – Control Frame 0, Bay 1 Fuse Unit

Issue 3	AUG 1984
233-142-100	TAP
PAGE 1 of 1	100

ANALYZE AUDIBLE ALARM FAULT

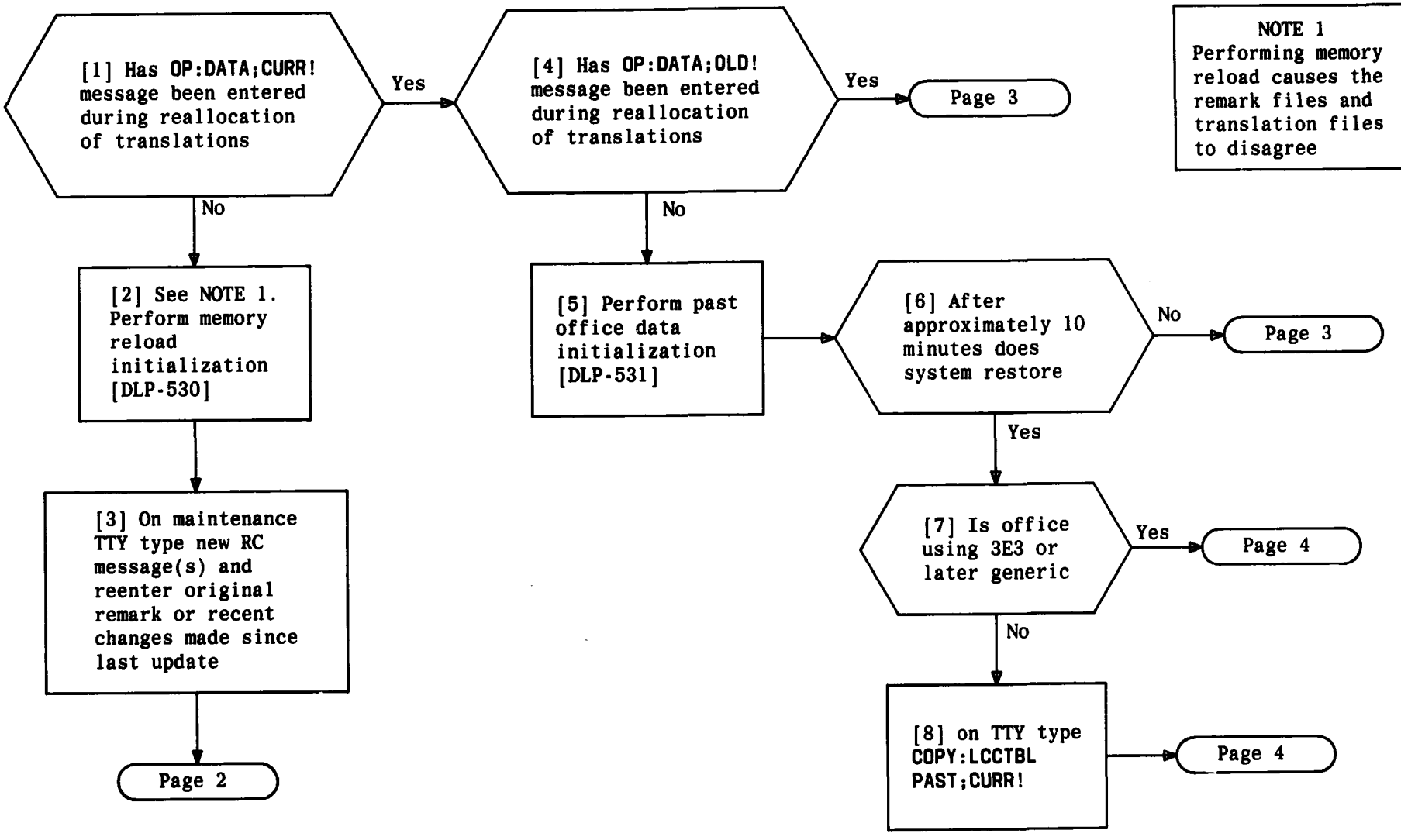

CLEAR TROUBLE ENCOUNTERED DURING REALLOCATION

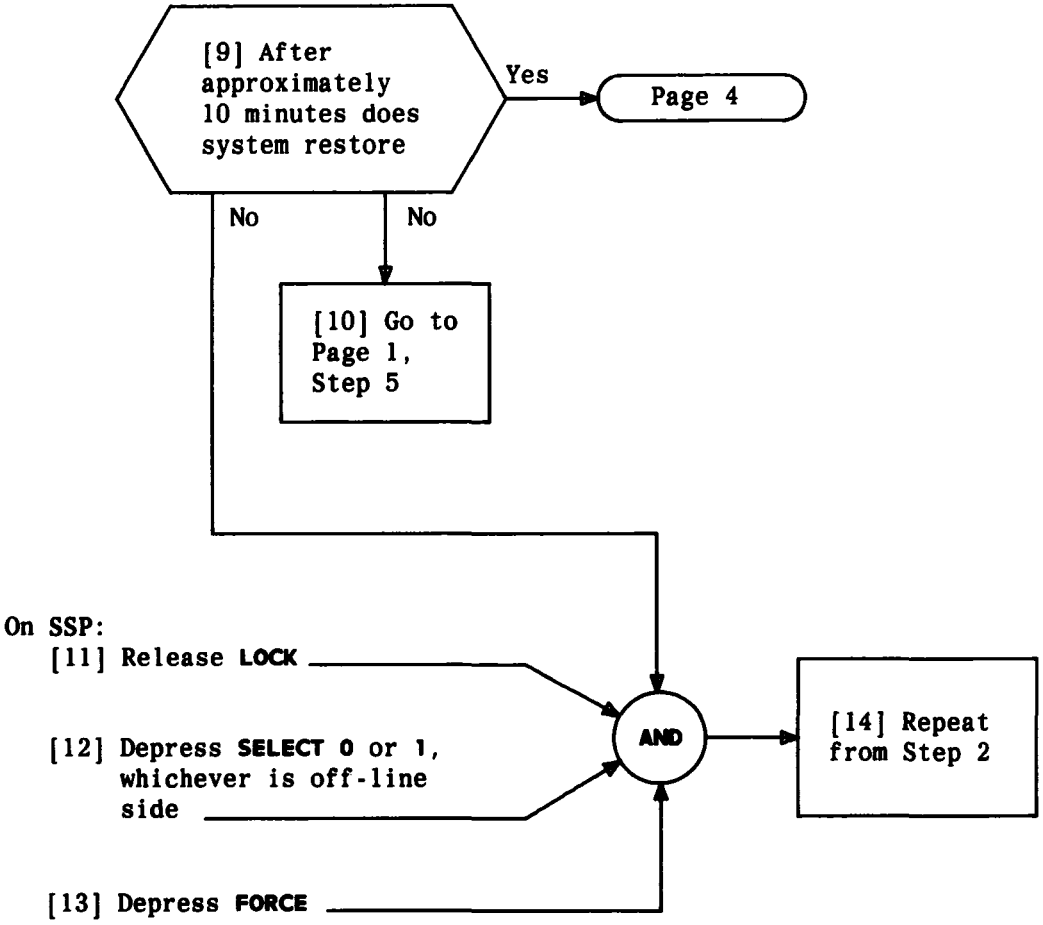

CLEAR TROUBLE ENCOUNTERED DURING REALLOCATION

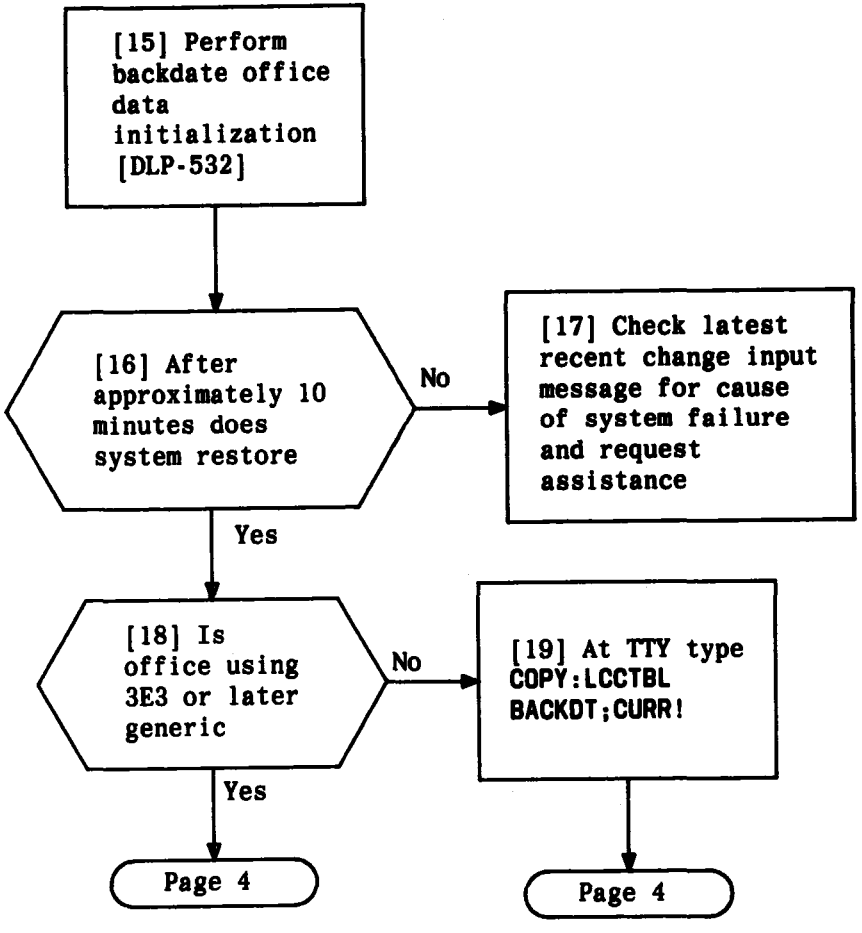

CLEAR TROUBLE ENCOUNTERED DURING REALLOCATION

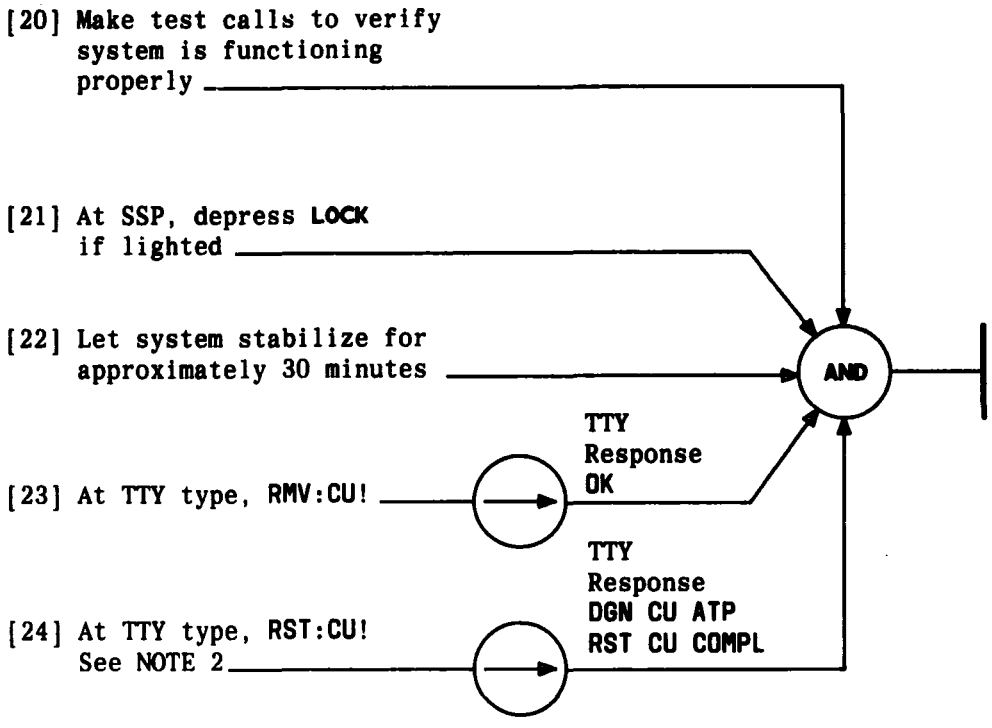

NOTE 2
It takes approximately 10 minutes for CU diagnostics to run

CLEAR TROUBLE ENCOUNTERED DURING REALLOCATION

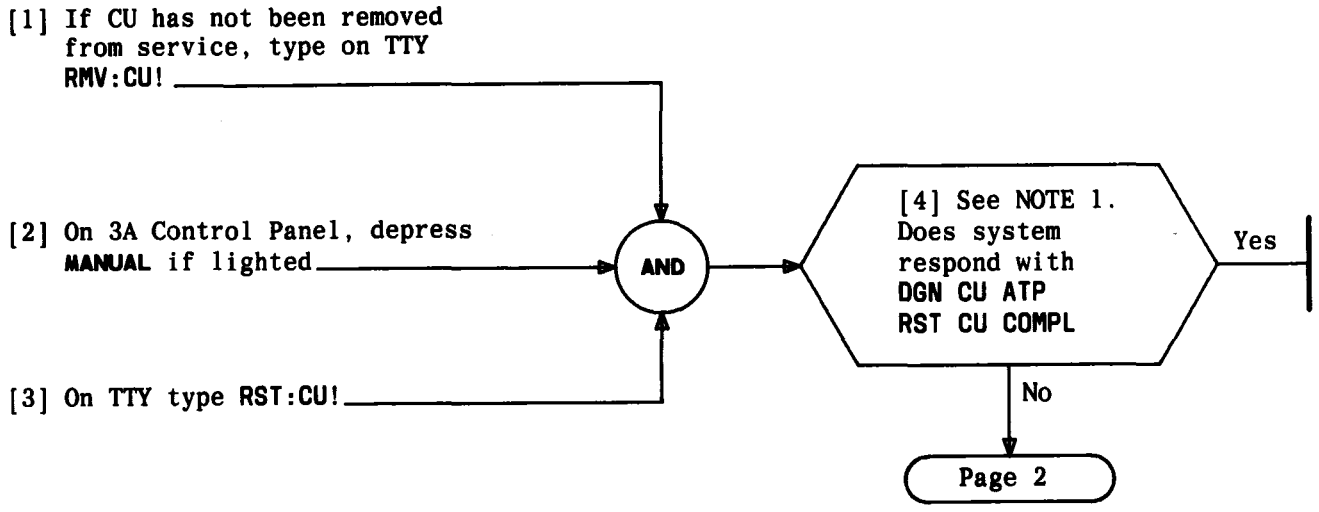

CLEAR CONTROL UNIT (CU) REMOVED FROM SERVICE

NOTE 1	
It takes approximately 10 minutes for CU diagnostics to run	
Issue 3	AUG 1984
233-142-100	TAP
PAGE 1 of 7	102

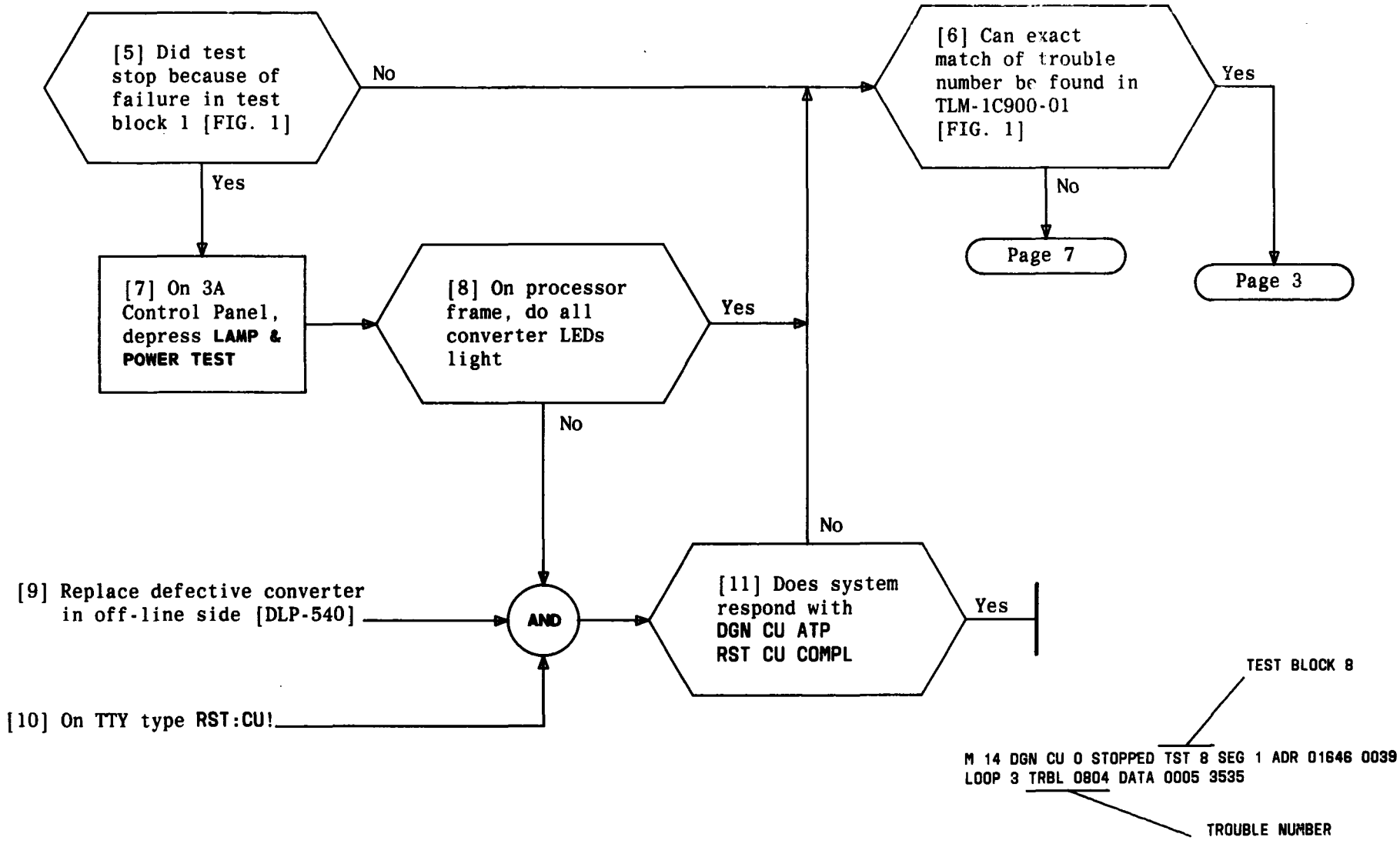

FIG. 1

CLEAR CONTROL UNIT (CU) REMOVED FROM SERVICE

[12] On TTY type
DGN:CU;STEP:aa!
aa = test number received
when test failed

[13] On SSP depress
TEST CONTROL – EXECUTE
to repeat diagnostic test
of test that failed

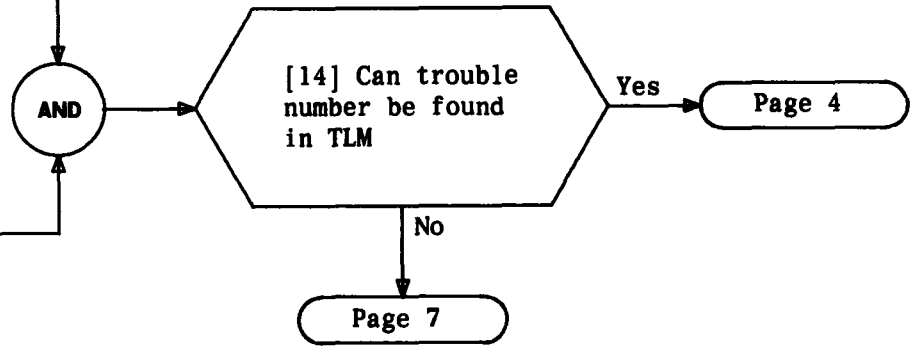

CLEAR CONTROL UNIT (CU) REMOVED FROM SERVICE

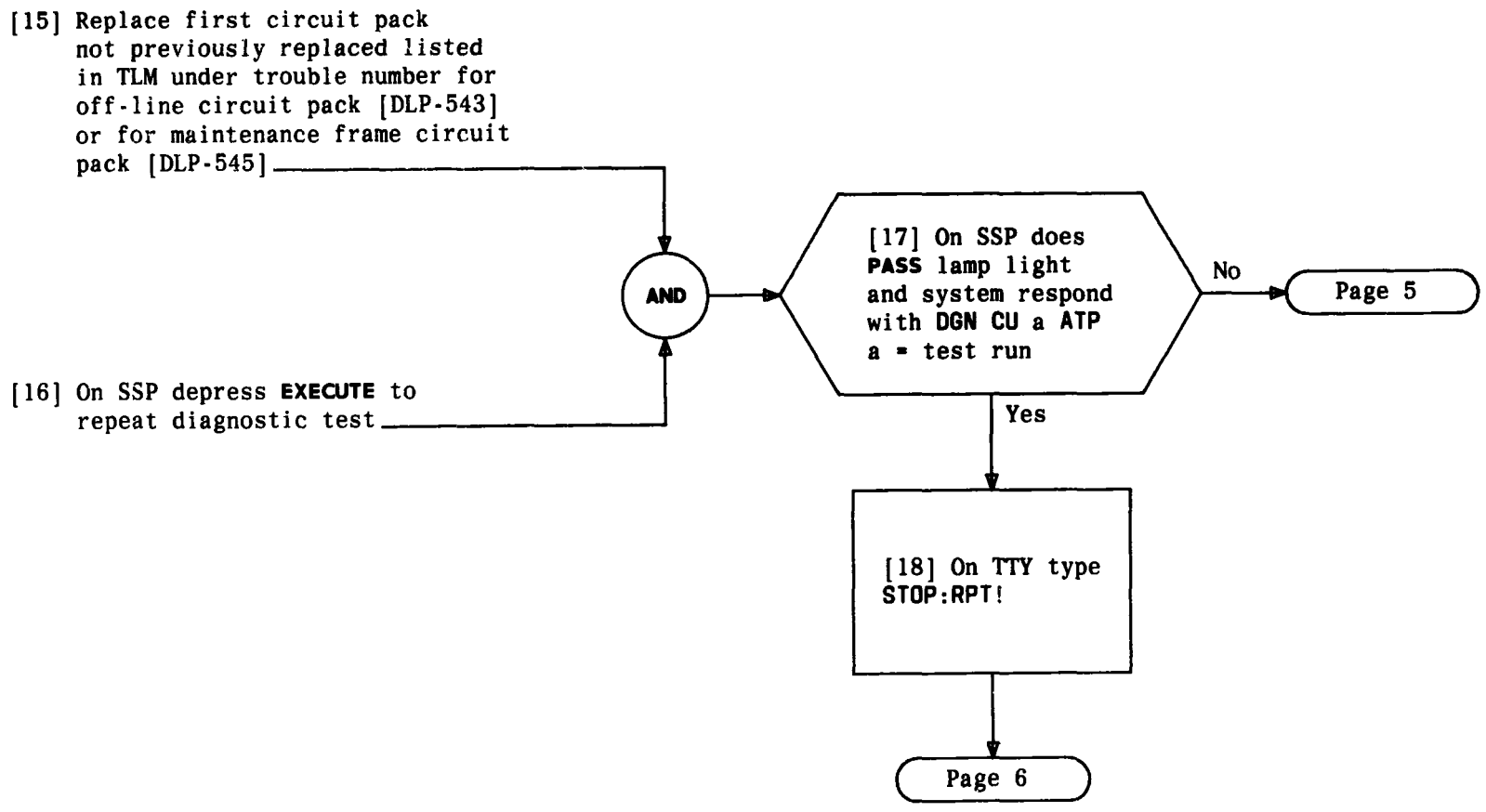

CLEAR CONTROL UNIT (CU) REMOVED FROM SERVICE

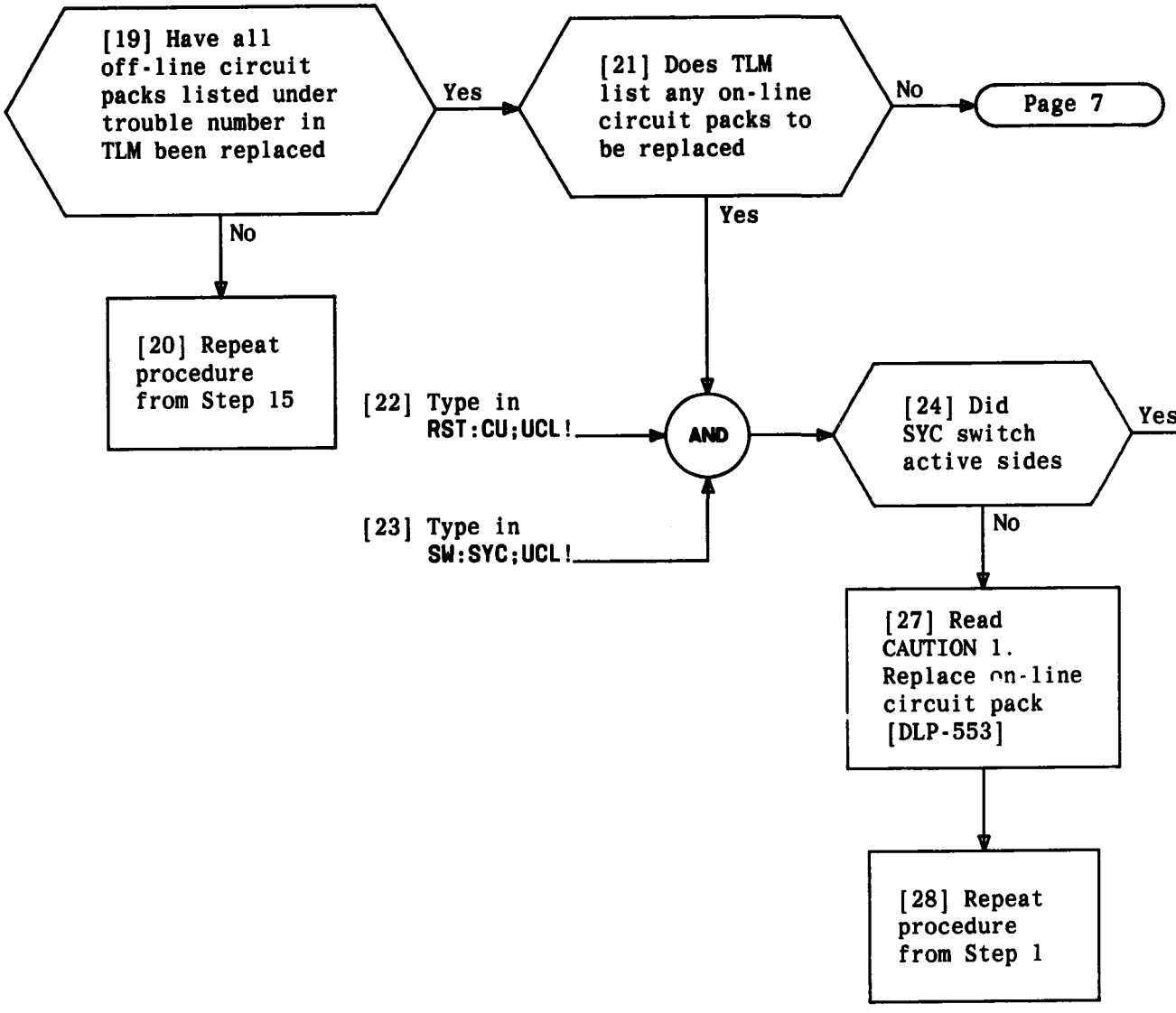

CAUTION 1
On-line circuit packs cannot be replaced without causing a service loss. Replace only during low traffic periods if possible

CLEAR CONTROL UNIT (CU) REMOVED FROM SERVICE

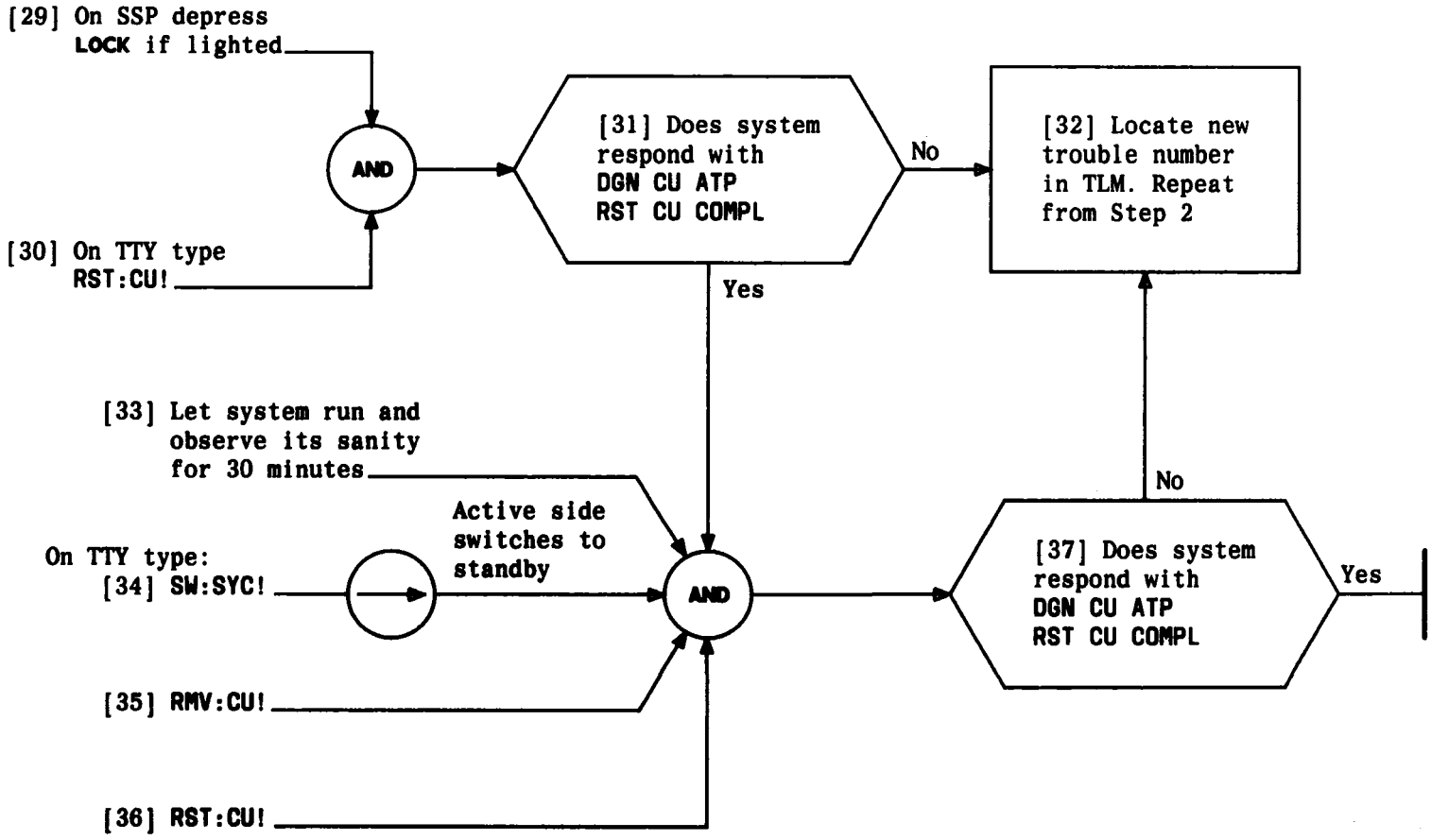

CLEAR CONTROL UNIT (CU) REMOVED FROM SERVICE

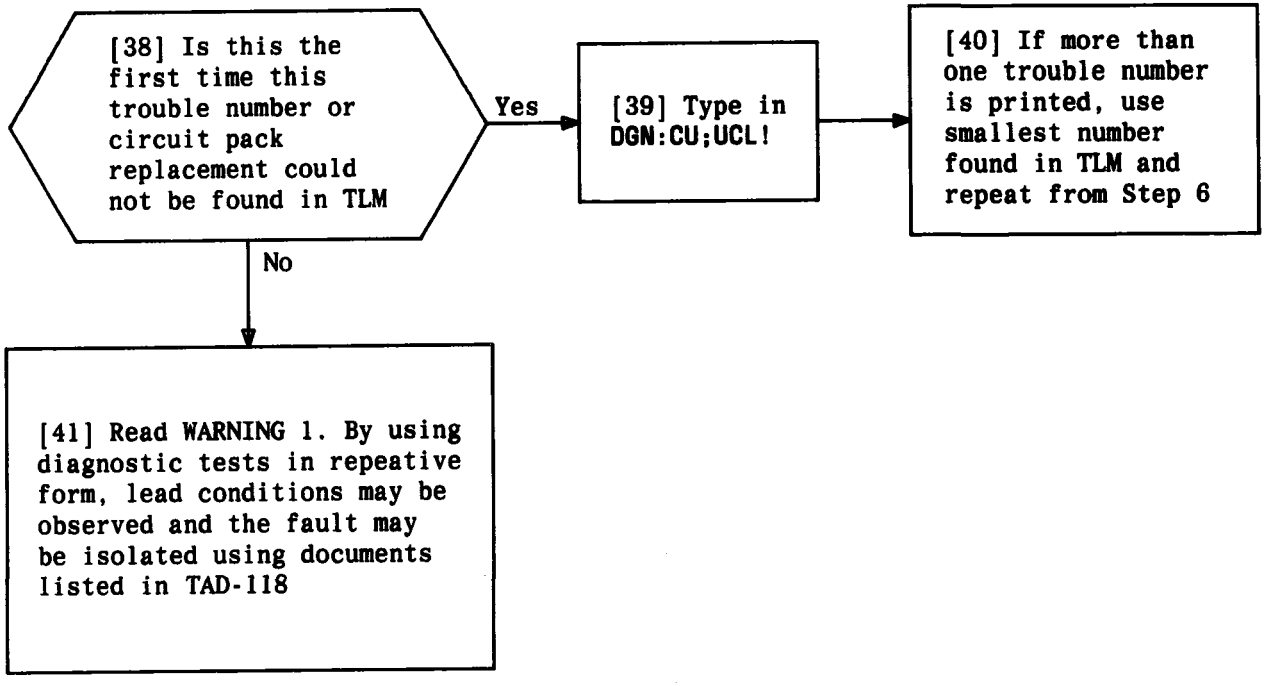

WARNING 1
Running diagnostic tests 37 and 54 in repeative form may cause equipment damage. Use step form

CLEAR CONTROL UNIT (CU) REMOVED FROM SERVICE

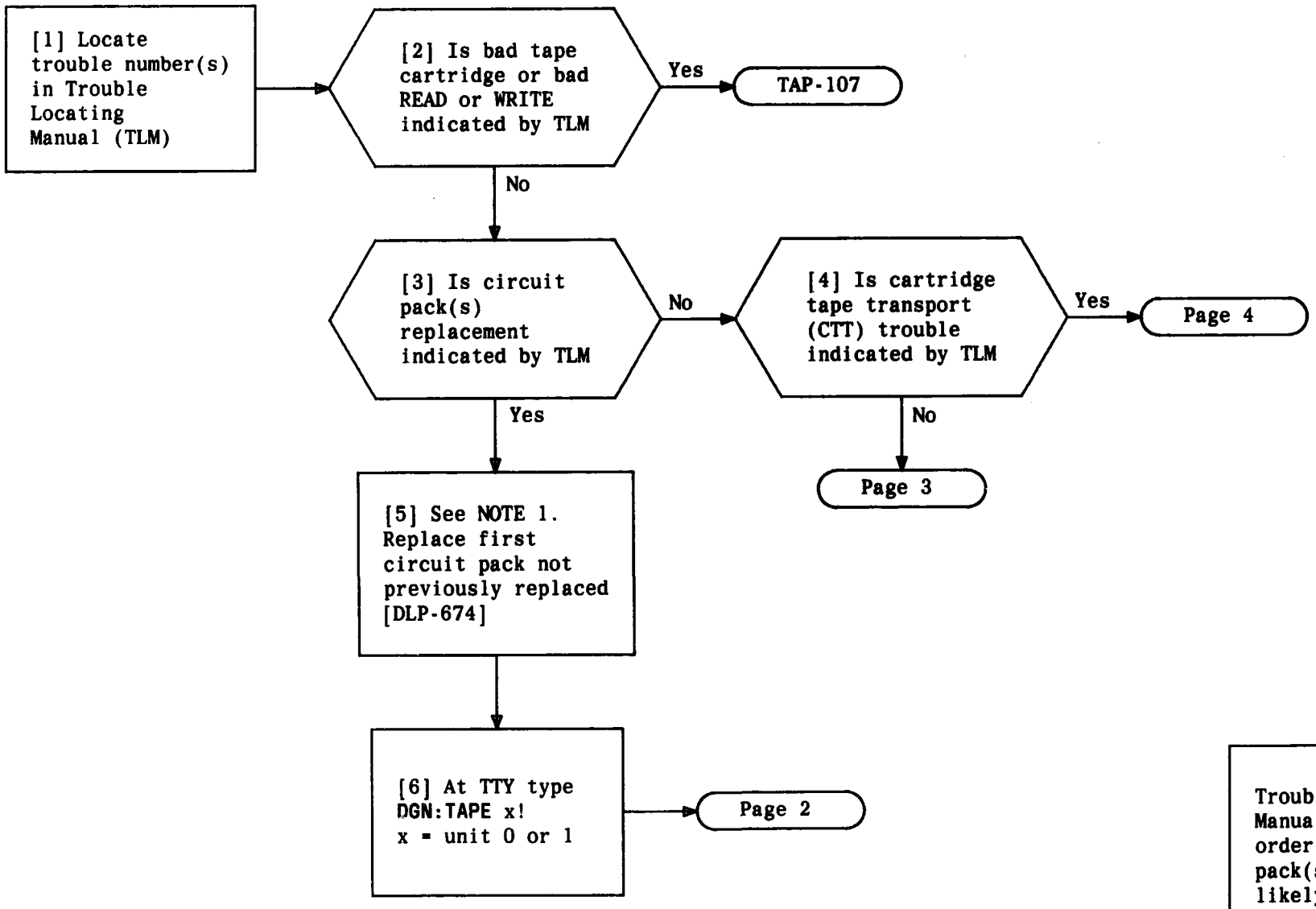

NOTE 1
Trouble Locating Manuals list in order the circuit pack(s) most likely to cause failure

CLEAR TROUBLE IN CARTRIDGE TAPE TRANSPORT SUBSYSTEM

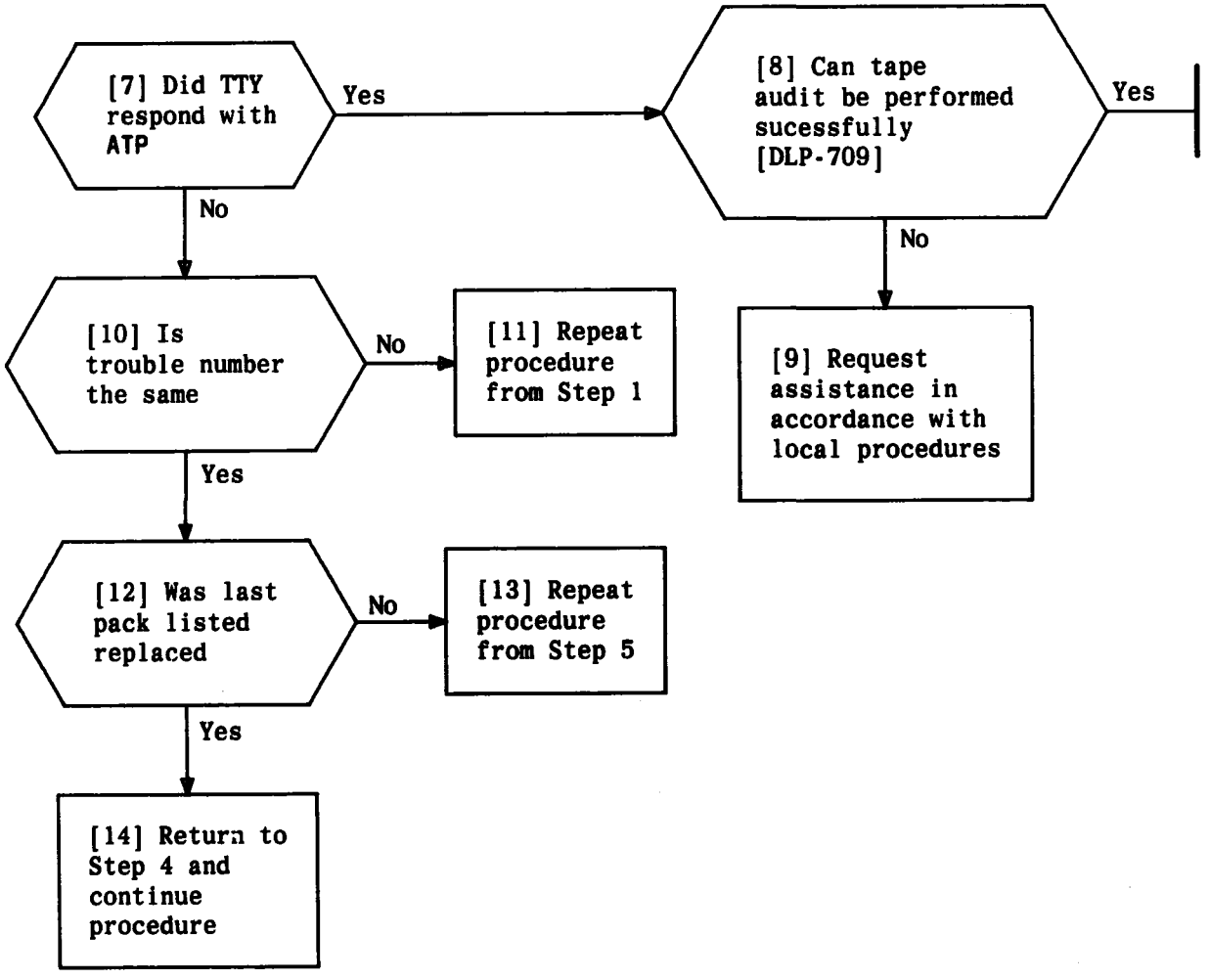

CLEAR TROUBLE IN CARTRIDGE TAPE TRANSPORT SUBSYSTEM

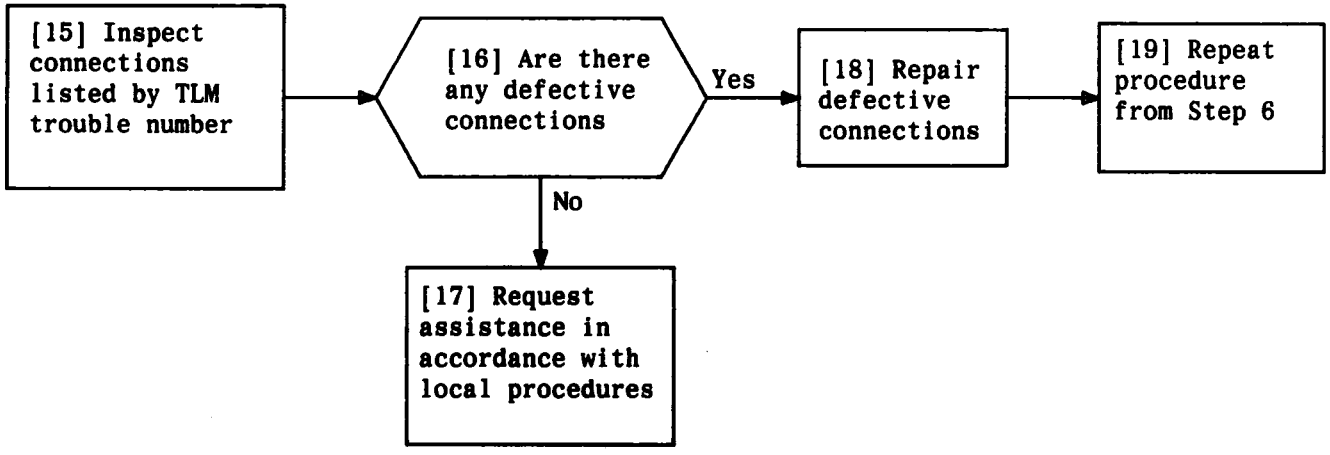

CLEAR TROUBLE IN CARTRIDGE TAPE TRANSPORT SUBSYSTEM

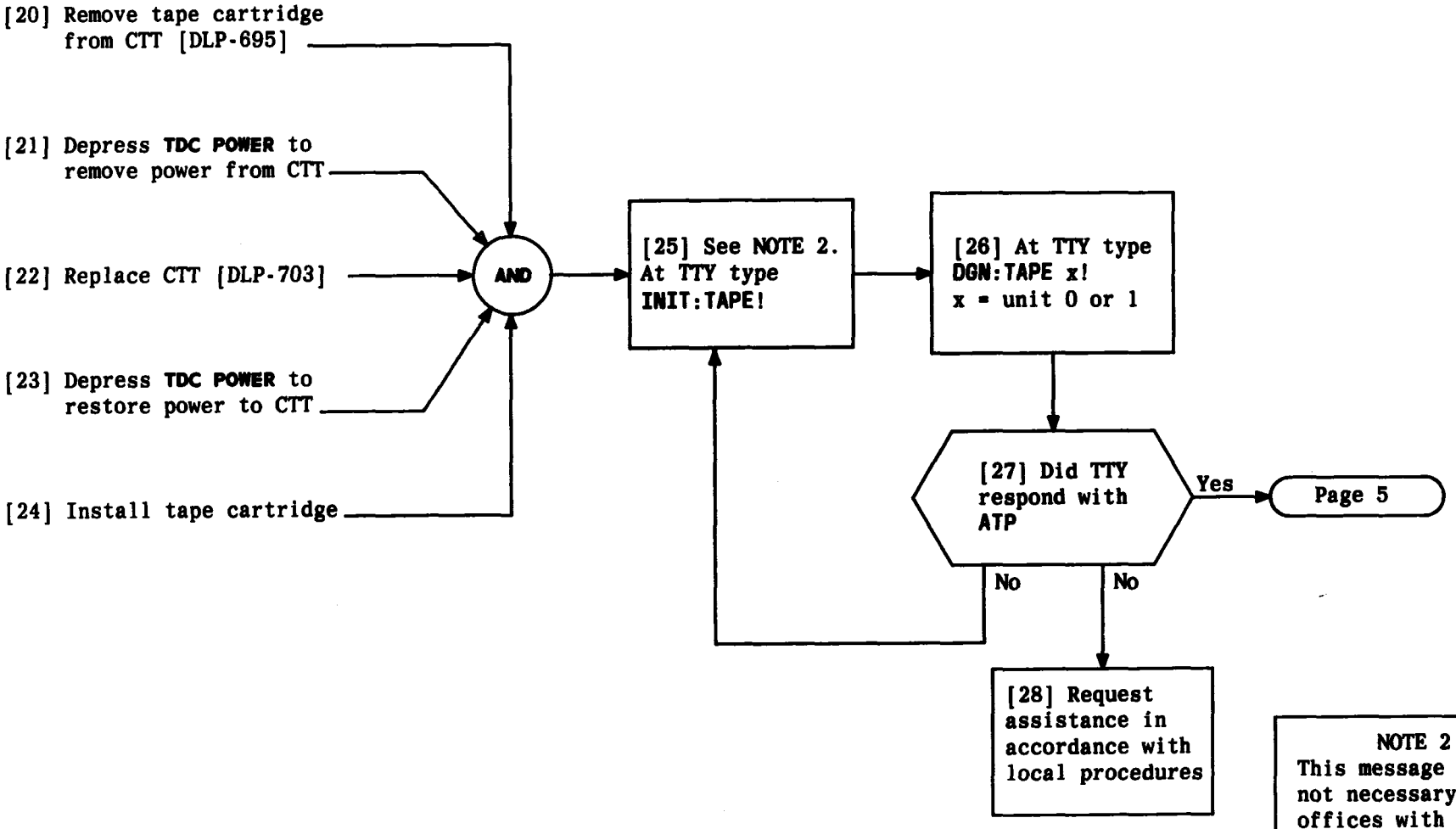

NOTE 2
This message is not necessary for offices with 3E3 generic or later. Tape initiation is run automatically during tape diagnostics

CLEAR TROUBLE IN CARTRIDGE TAPE TRANSPORT SUBSYSTEM

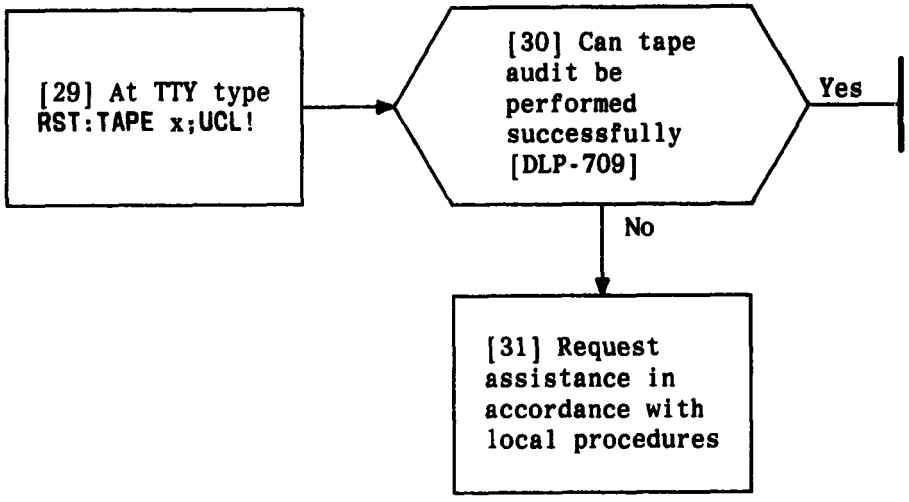

CLEAR TROUBLE IN CARTRIDGE TAPE TRANSPORT SUBSYSTEM

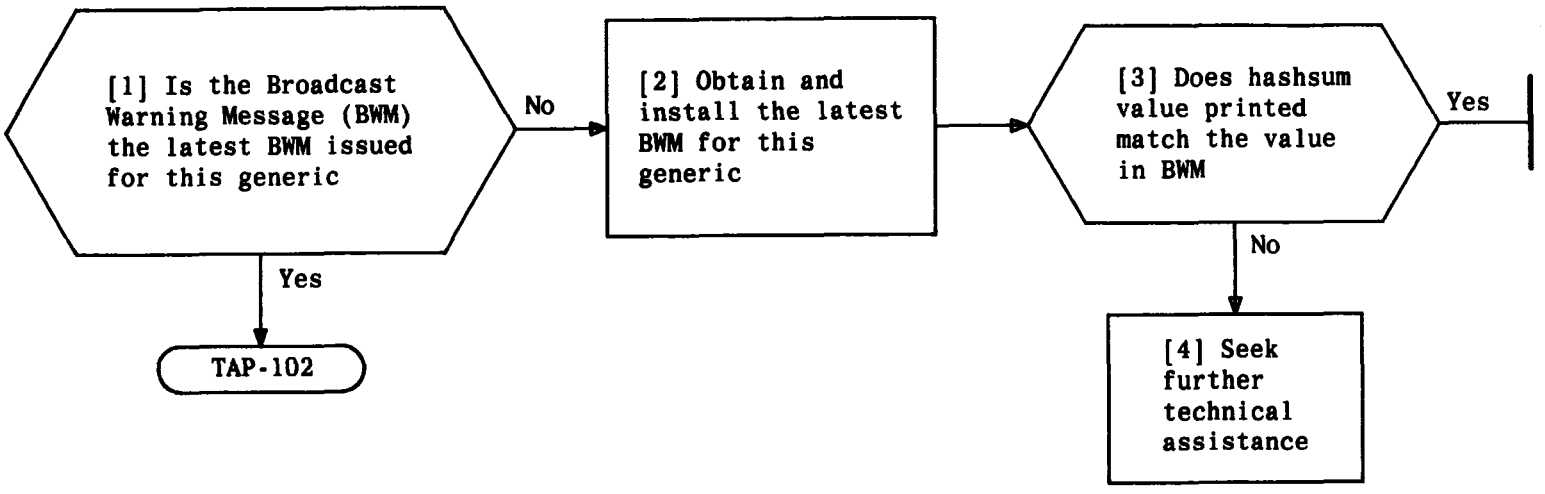

CORRECT BROADCAST WARNING MESSAGE (BWM) HASHSUMS MISMATCH

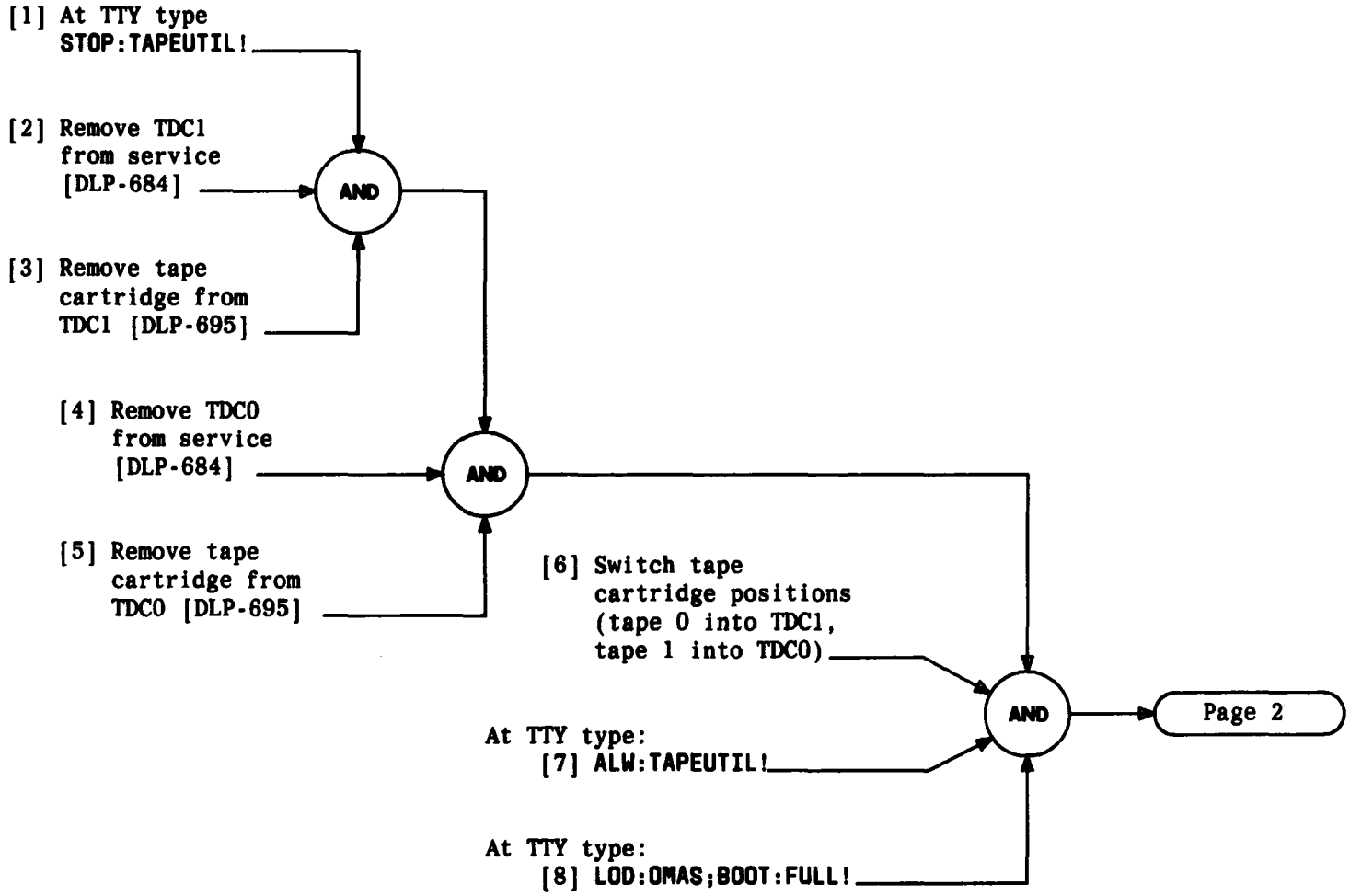

CLEAR BOOTSTRAP OPERATION TROUBLE

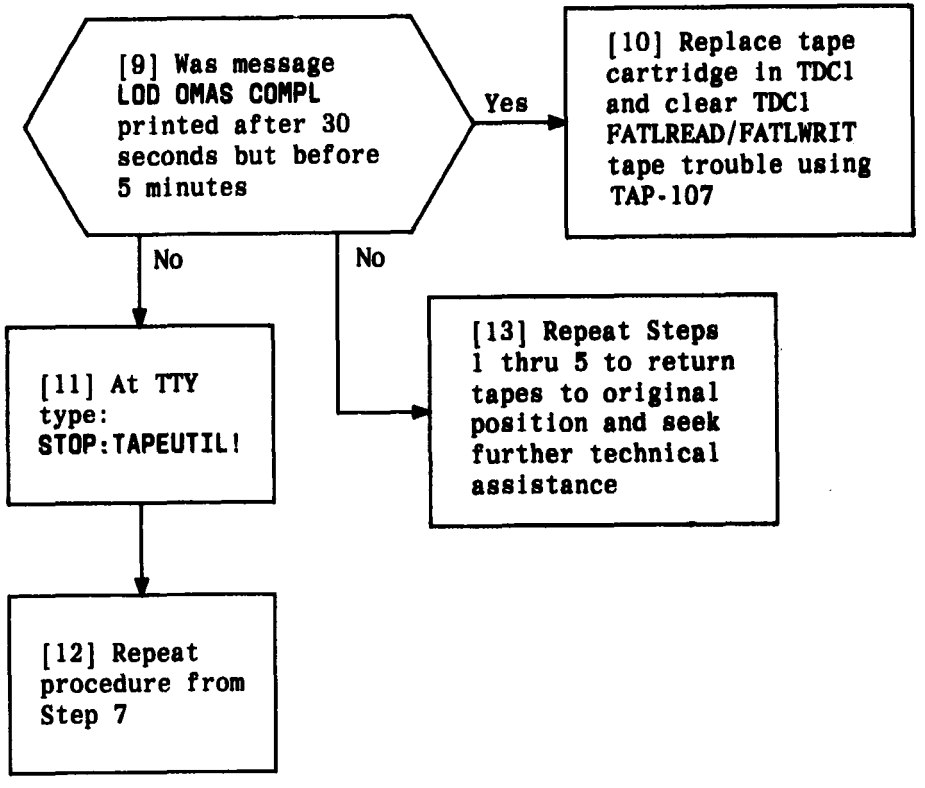

CLEAR BOOTSTRAP OPERATION TROUBLE

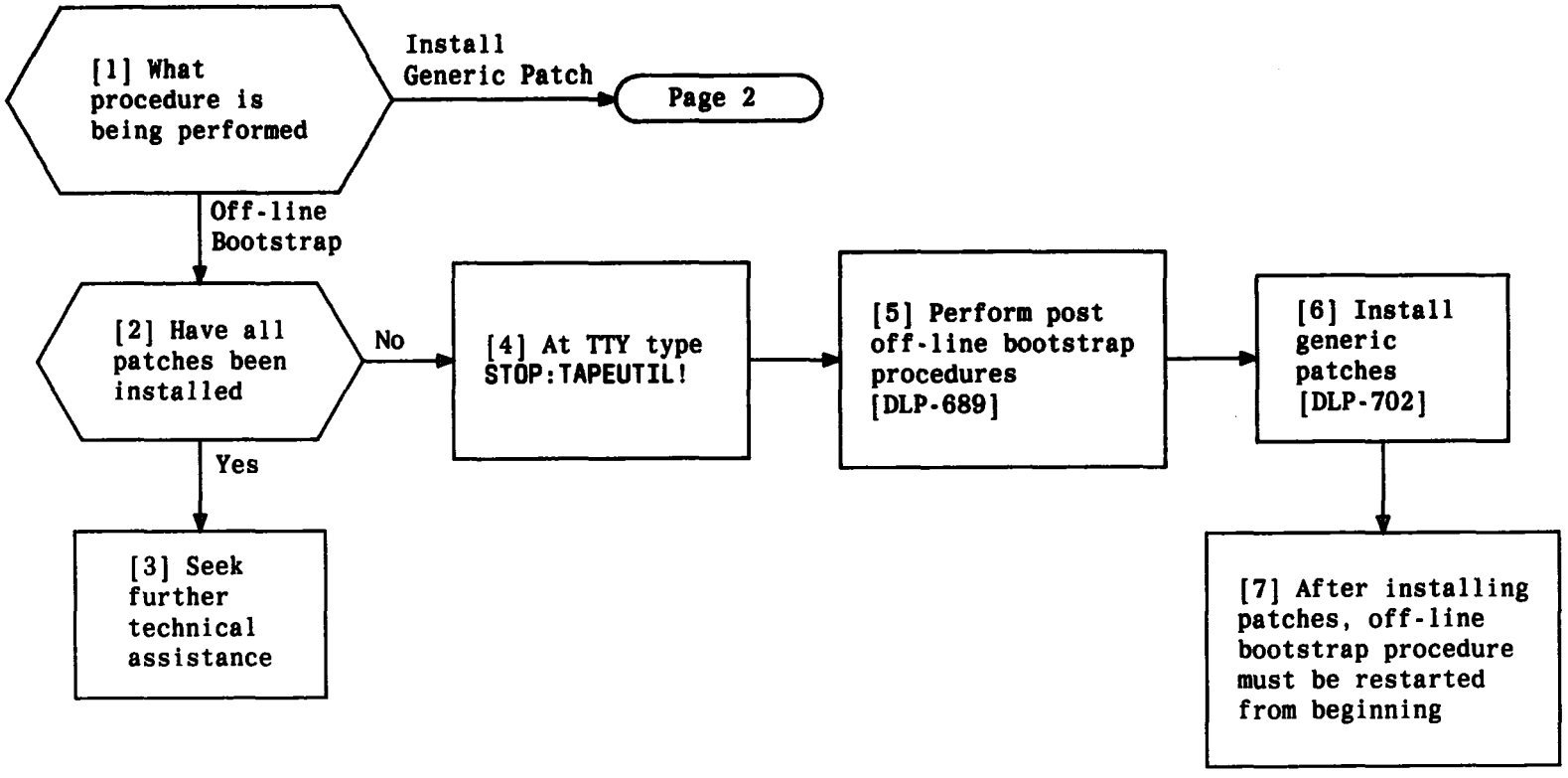

CORRECT GENERIC HASHSUMS MISMATCH (SO-2 GENERIC)

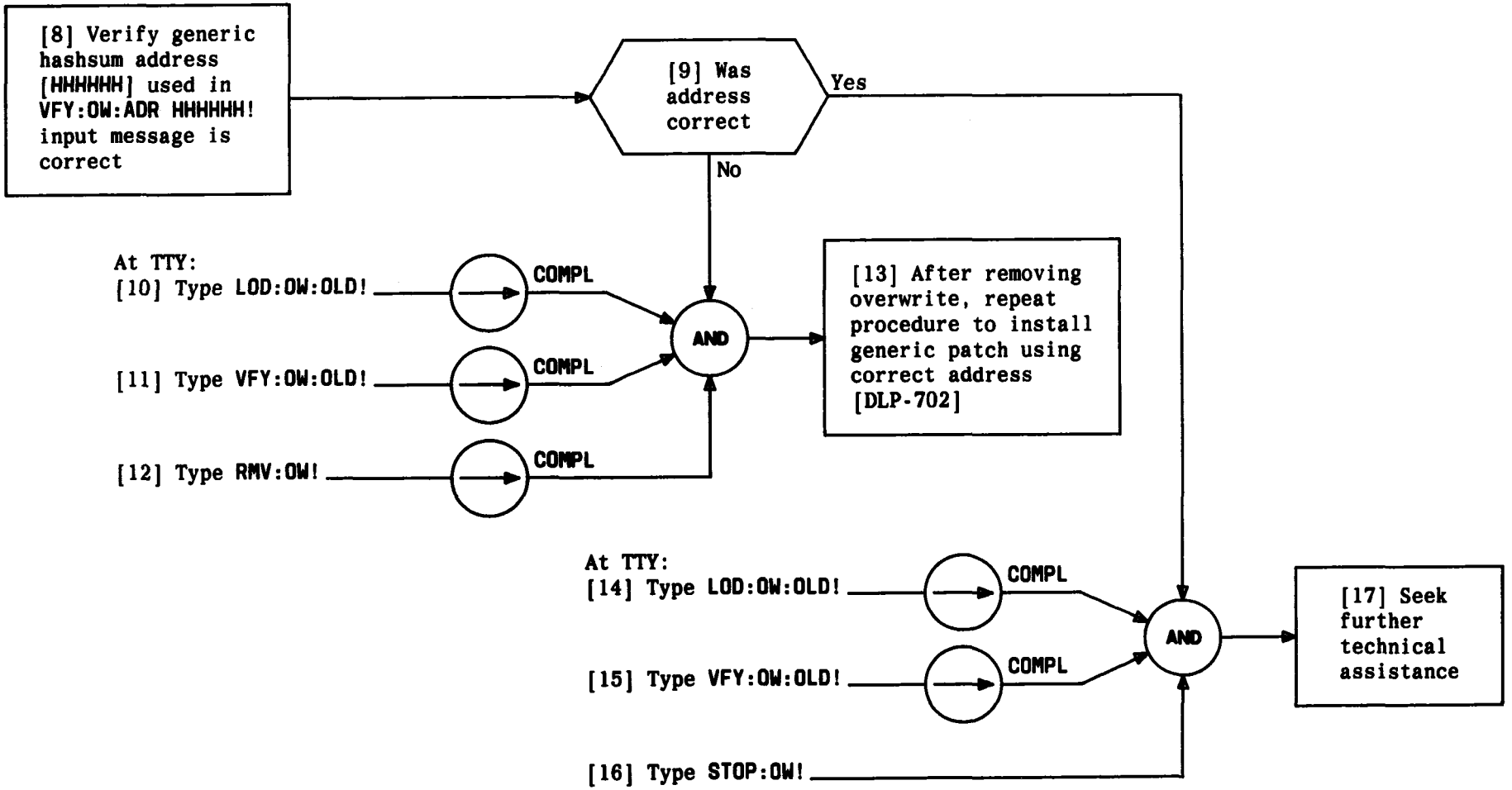

CORRECT GENERIC HASHSUMS MISMATCH (SO-2 GENERIC)

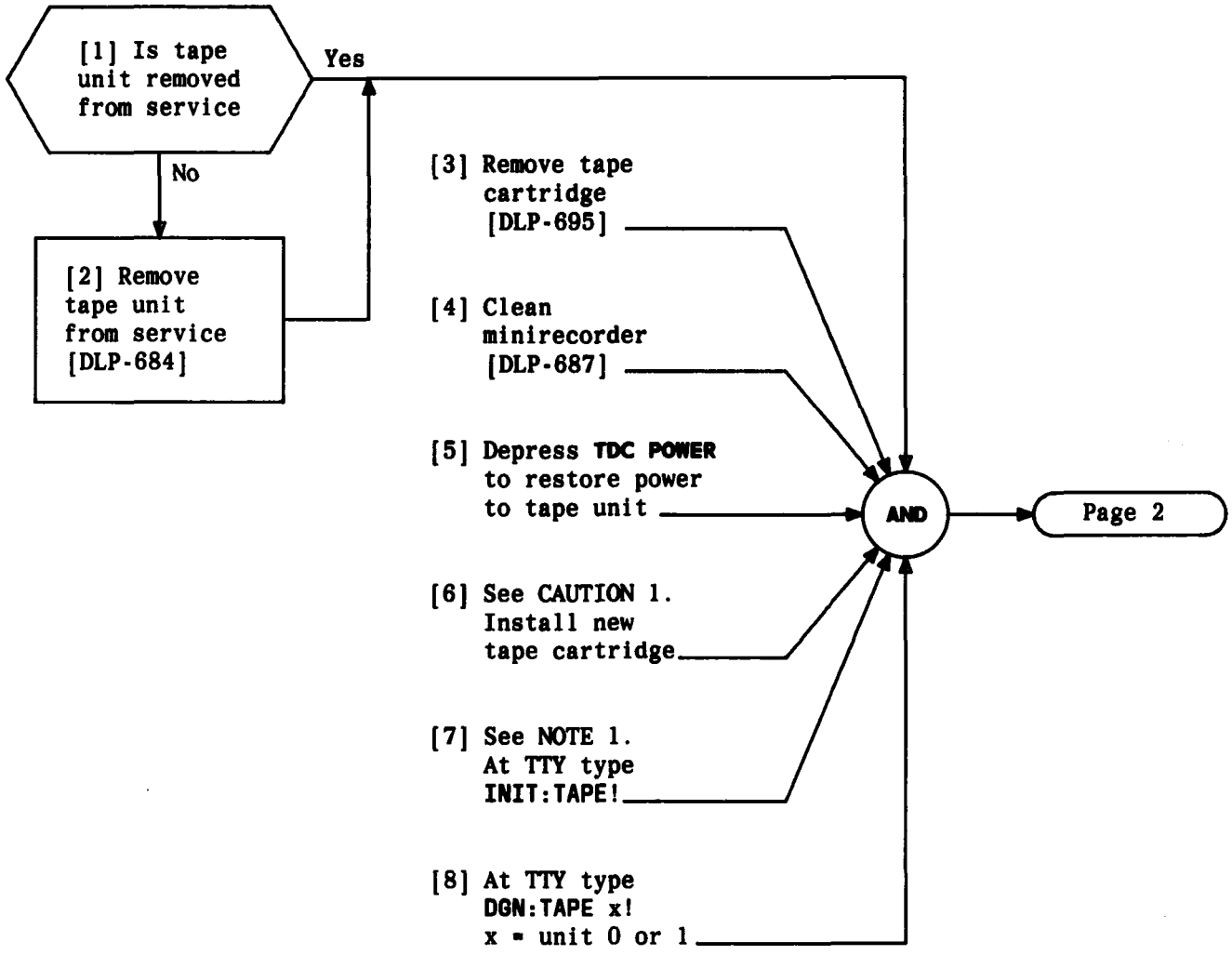

CLEAR TAPE DATA CONTROLLER FATLREAD/FATLWRIT TROUBLE

NOTE 1
This message is not necessary for offices with 3E3 generic or later. Tape initiation is run automatically during tape diagnostics

CAUTION 1
The replacement tape must be same generic and issue as removed tape

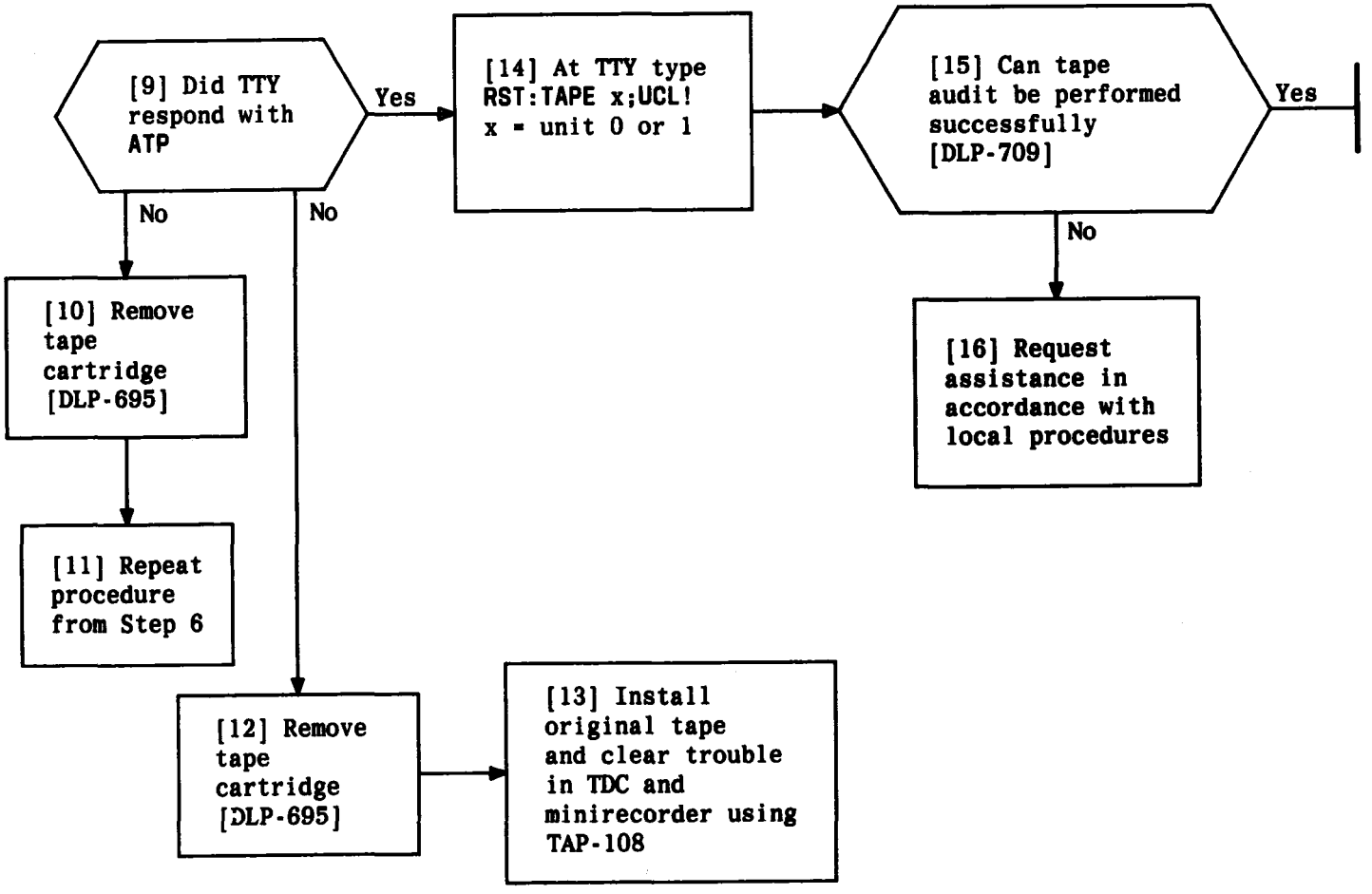

CLEAR TAPE DATA CONTROLLER FATLREAD/FATLWRIT TROUBLE

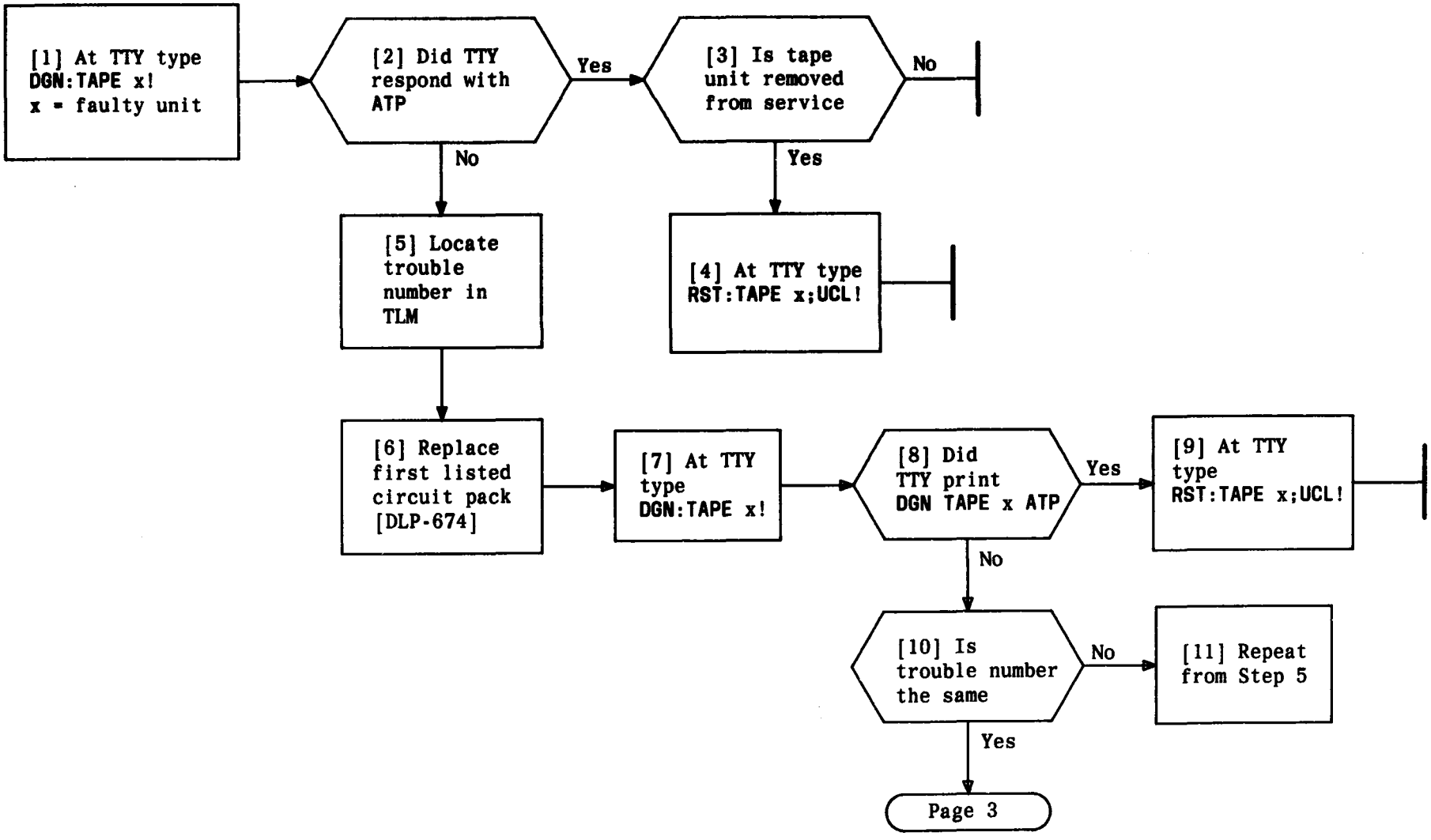

CLEAR TROUBLE IN TAPE DATA CONTROLLER AND MINIRECORDER

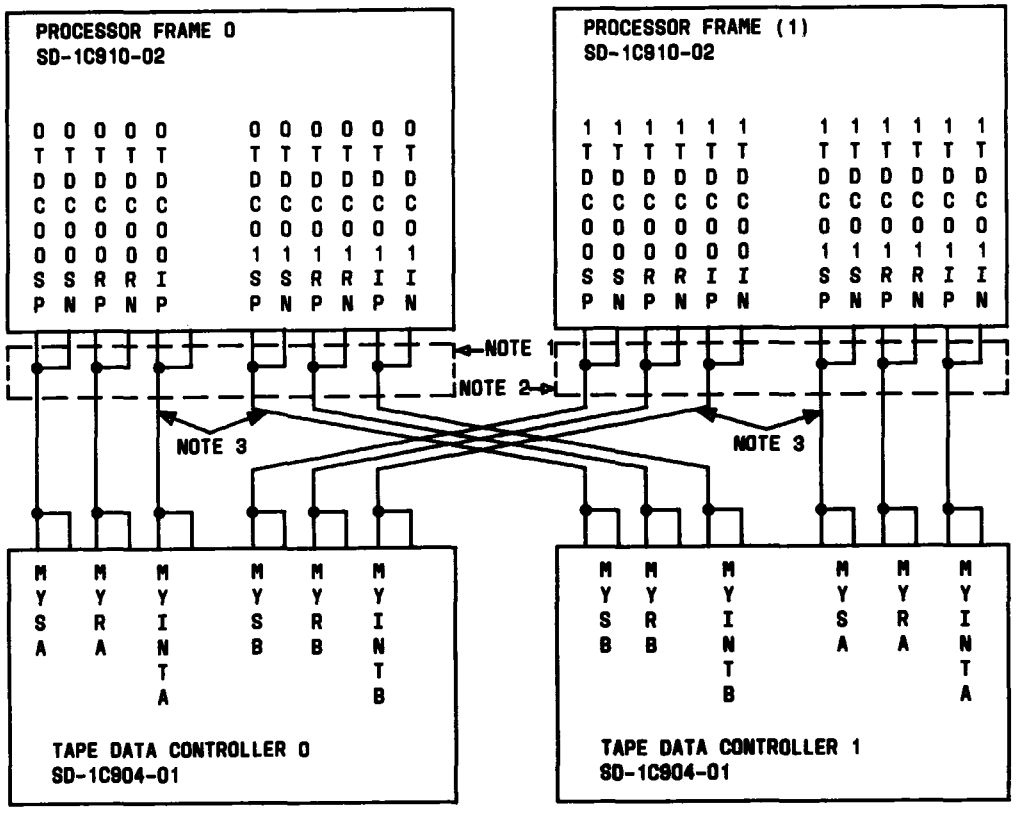

NOTE 1 – CONNECTOR PIN IDENTIFICATION, PROCESSOR FRAME 0

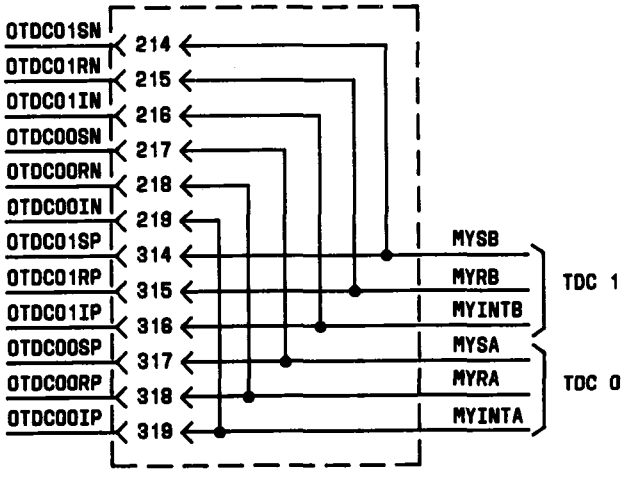

NOTE 2 – CONNECTOR PIN IDENTIFICATION, PROCESSOR FRAME 1

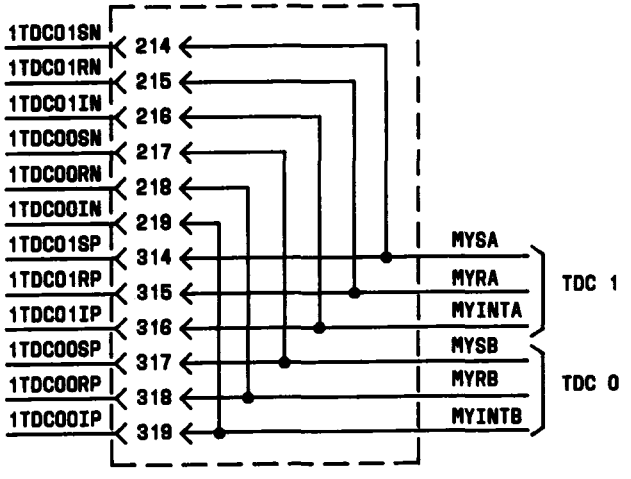

NOTE 3 – CABLING IS 30GA 100Ω COAX KS-21112,L2

FIG. 1 Tape Data Controller – 3A CC Cabling

CLEAR TROUBLE IN TAPE DATA CONTROLLER AND MINIRECORDER

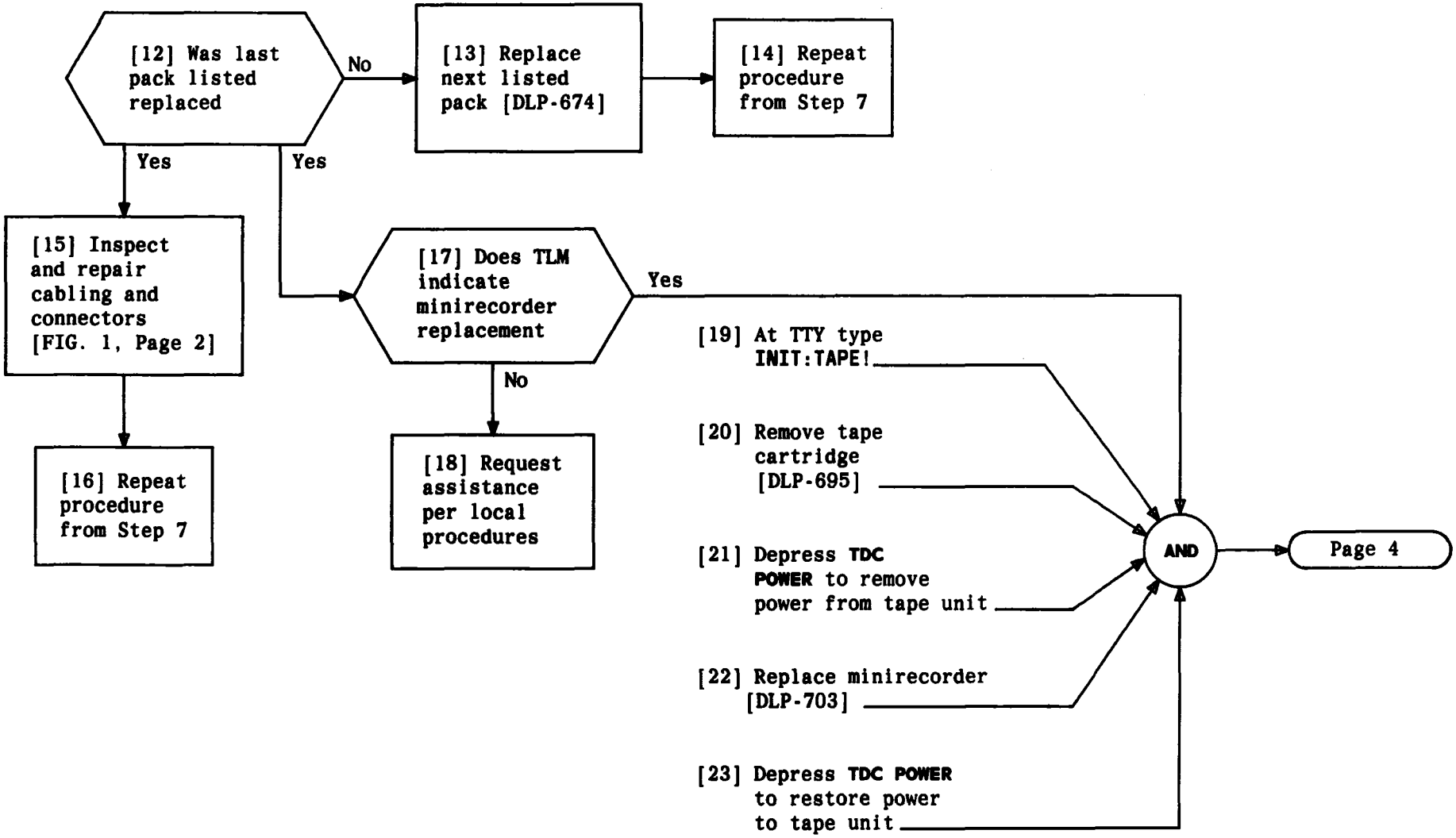

CLEAR TROUBLE IN TAPE DATA CONTROLLER AND MINIRECORDER

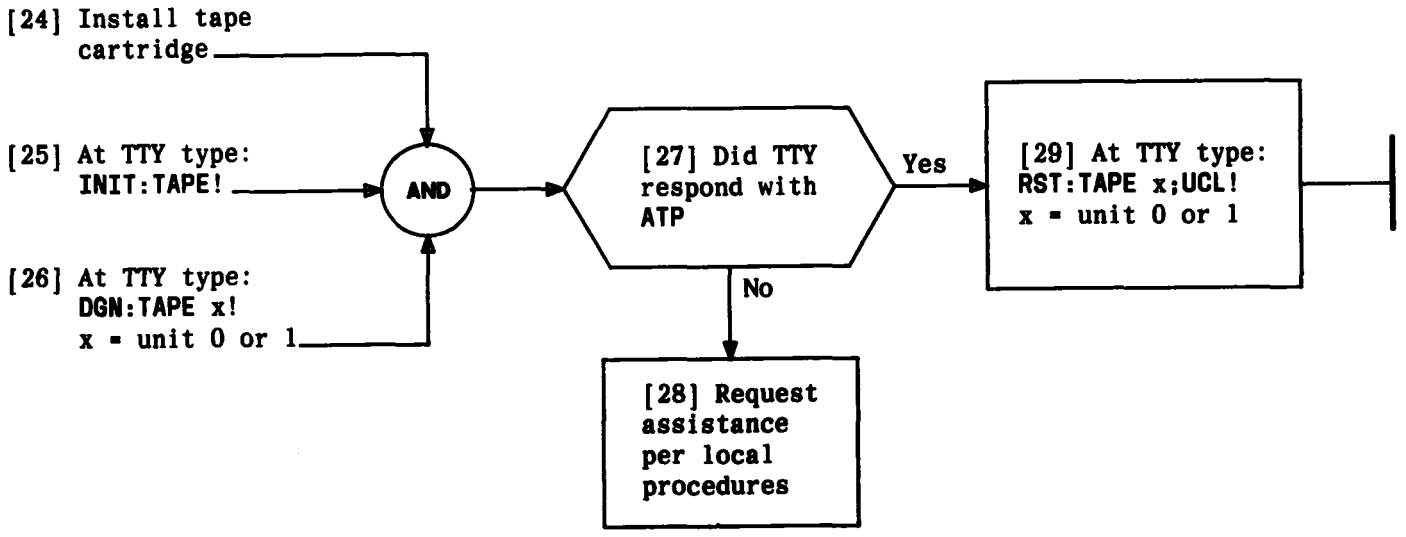

CLEAR TROUBLE IN TAPE DATA CONTROLLER AND MINIRECORDER

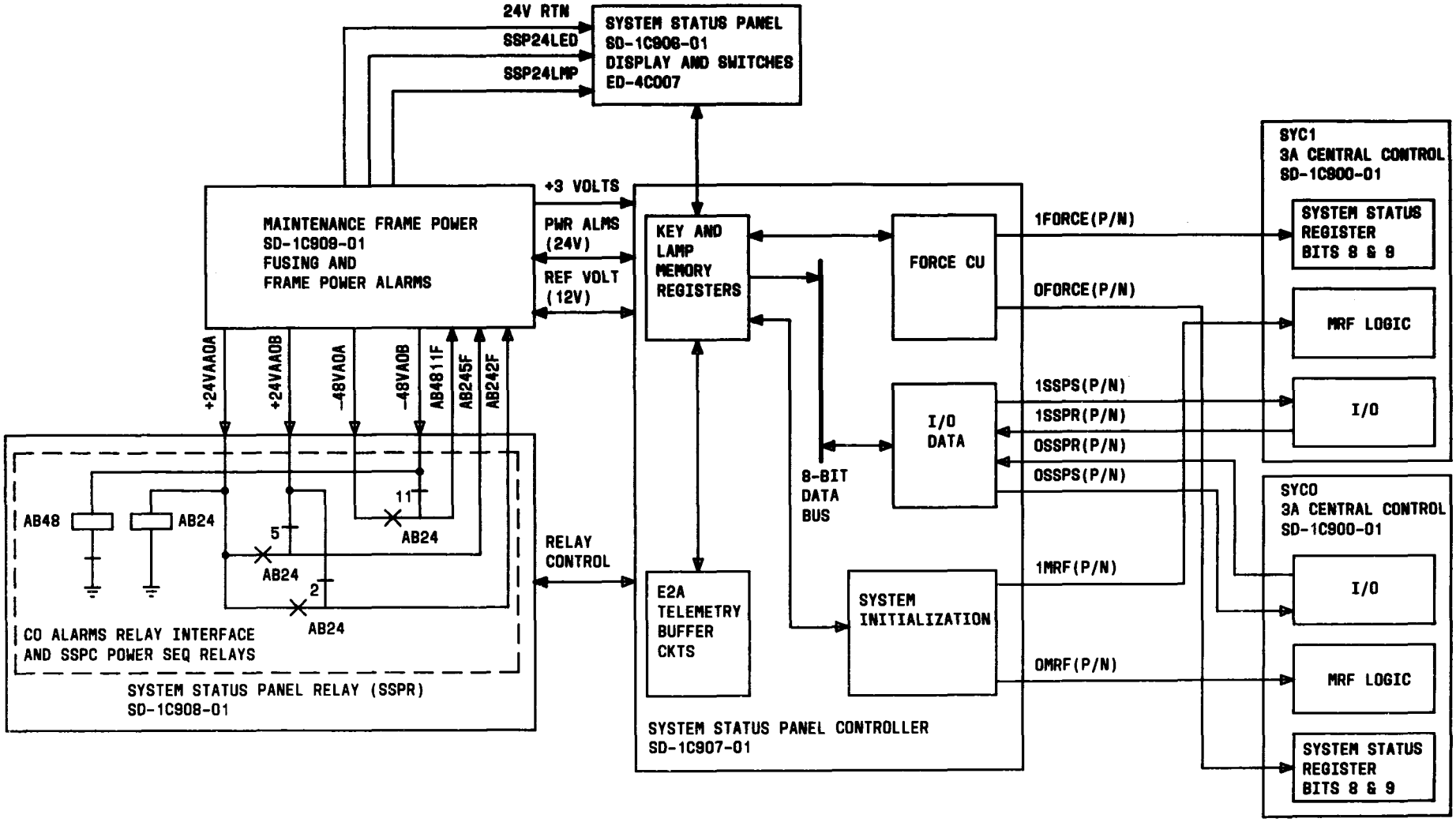

Issue 3	AUG 1984
233-142-100	TAD
PAGE 1 of 1	109

SYSTEM STATUS PANEL CONTROL INTERFACE

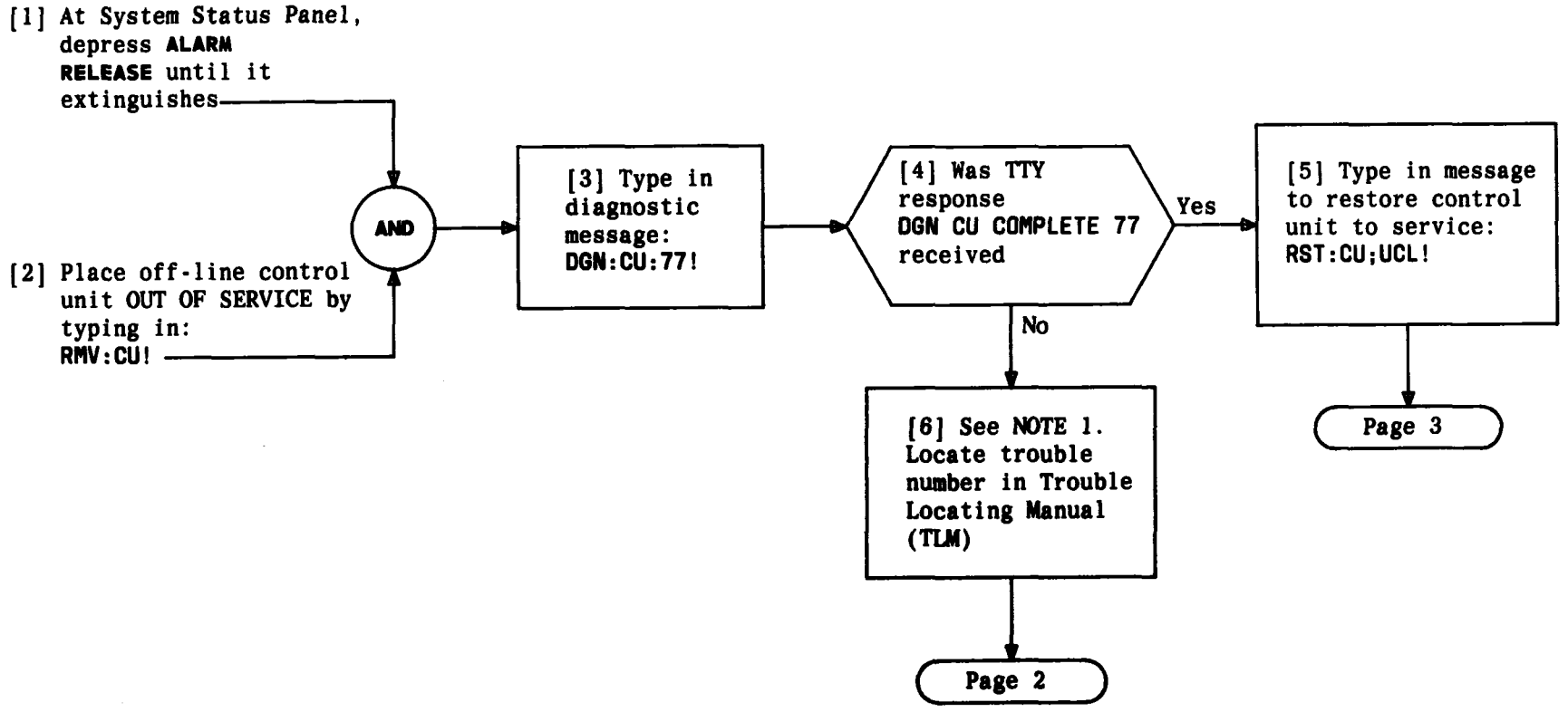

NOTE 1
Trouble Locating Manuals list in order circuit pack(s) most likely to cause failure.

Issue 3	AUG 1984
233-142-100	TAP
PAGE 1 of 3	110

CLEAR TROUBLE IN SYSTEM STATUS PANEL CONTROLLER (SSPC)

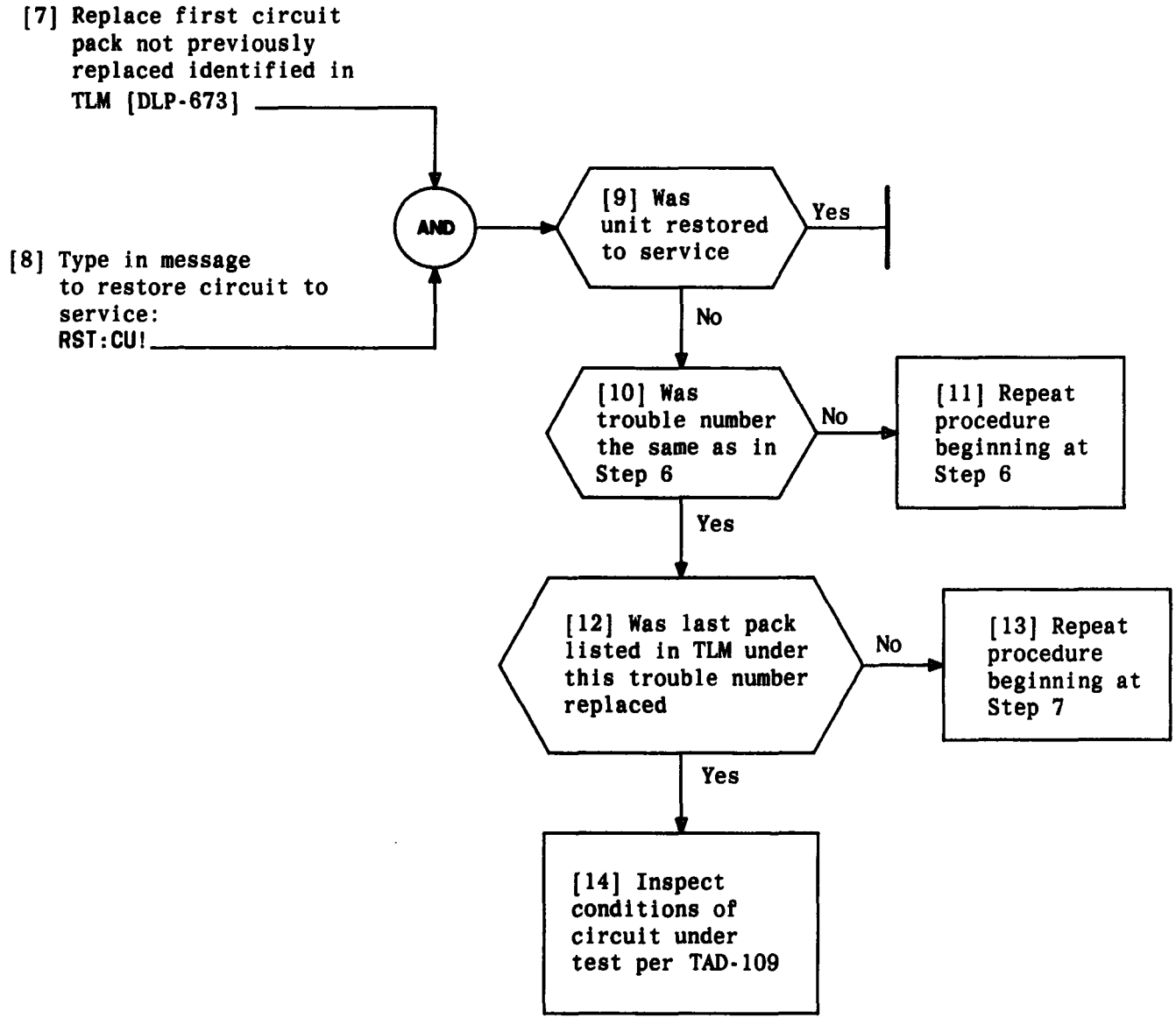

CLEAR TROUBLE IN SYSTEM STATUS PANEL CONTROLLER (SSPC)

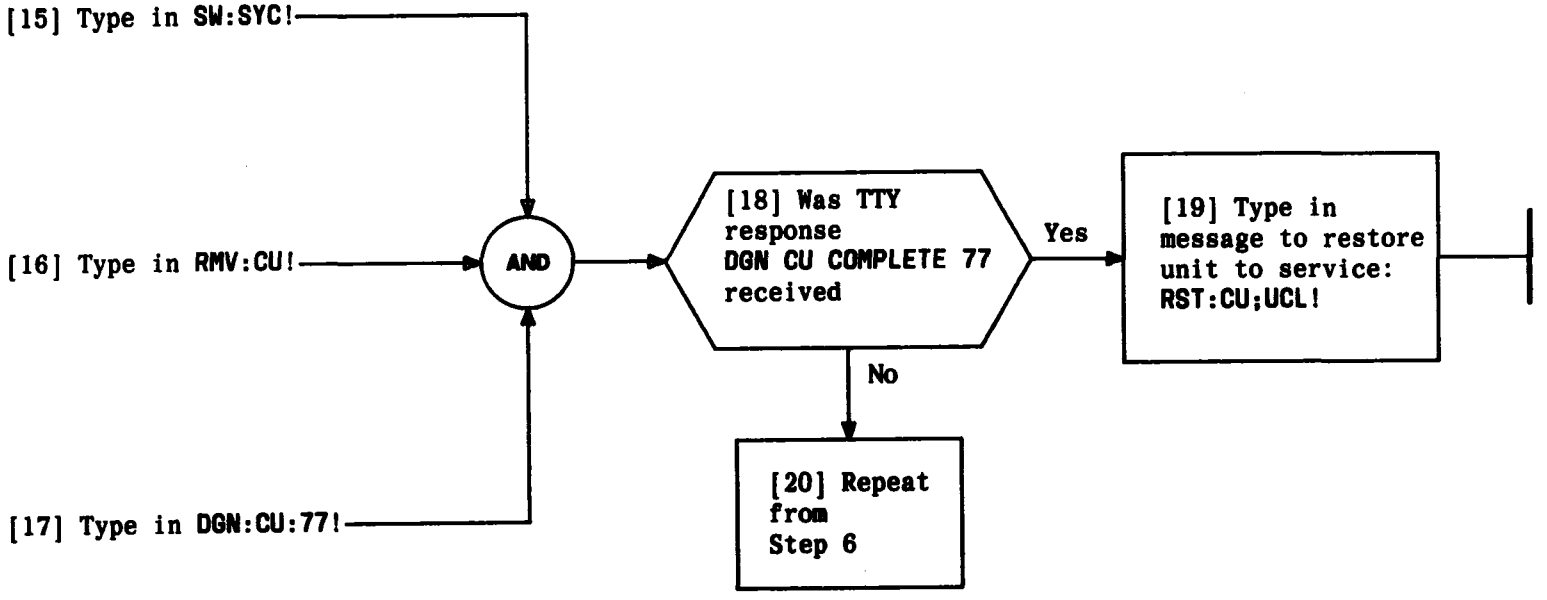

CLEAR TROUBLE IN SYSTEM STATUS PANEL CONTROLLER (SSPC)

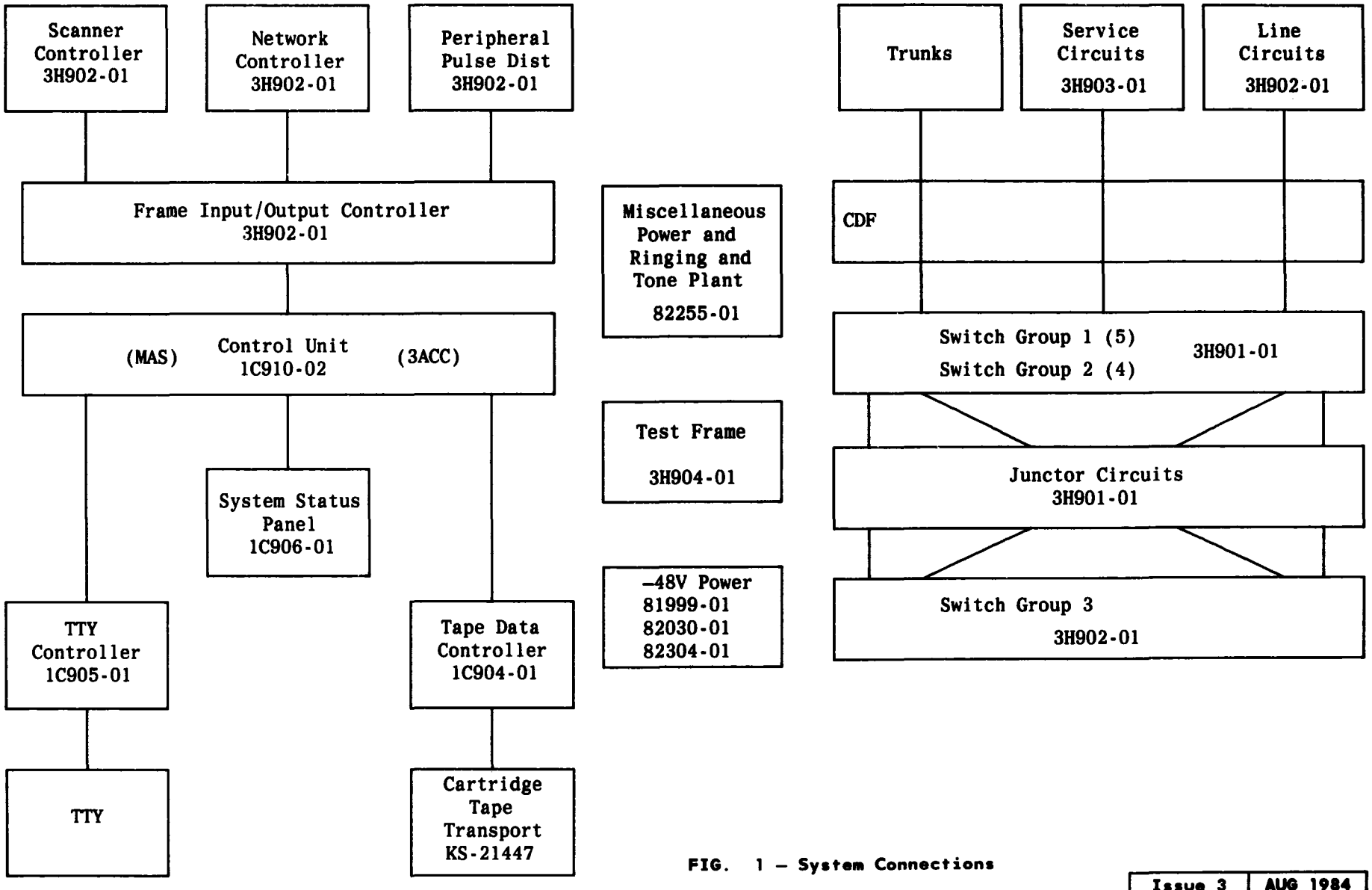

FIG. 1 – System Connections

OFFICE SYSTEM CONNECTIONS

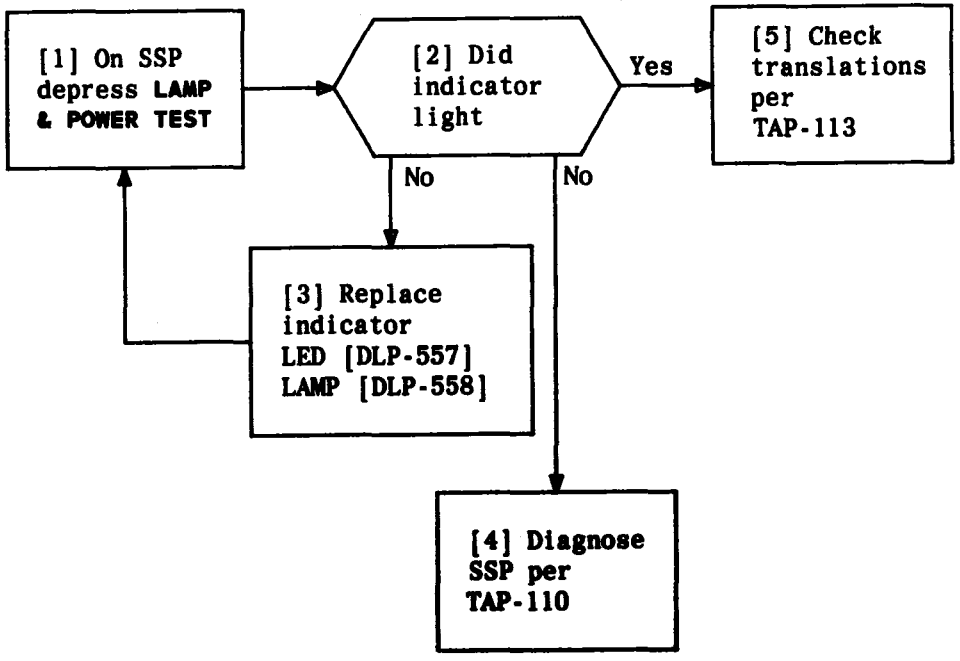

ANALYZE SYSTEM STATUS PANEL ALARM FAULT

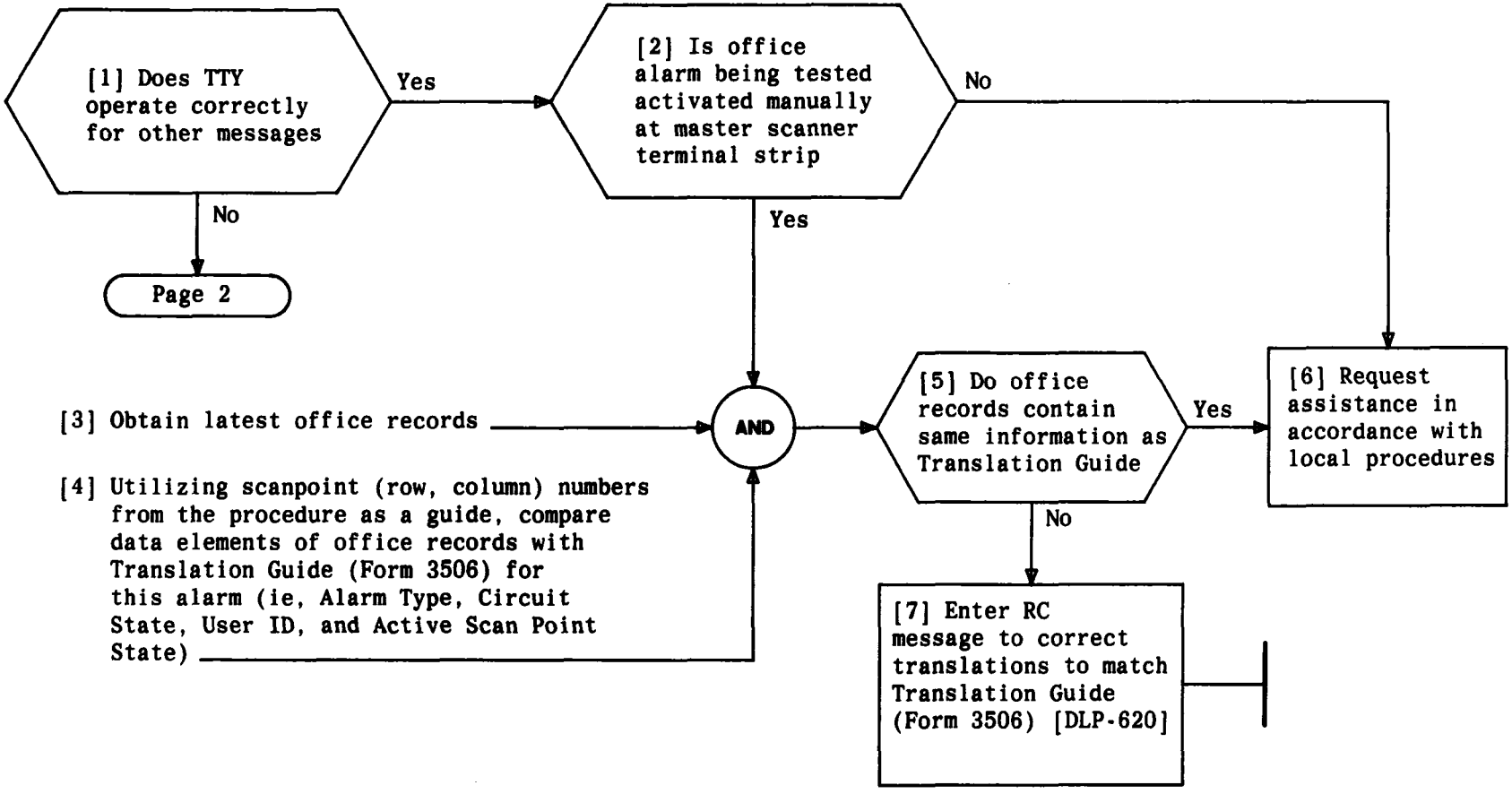

ANALYZE INCORRECT TTY ALARM REPORTING

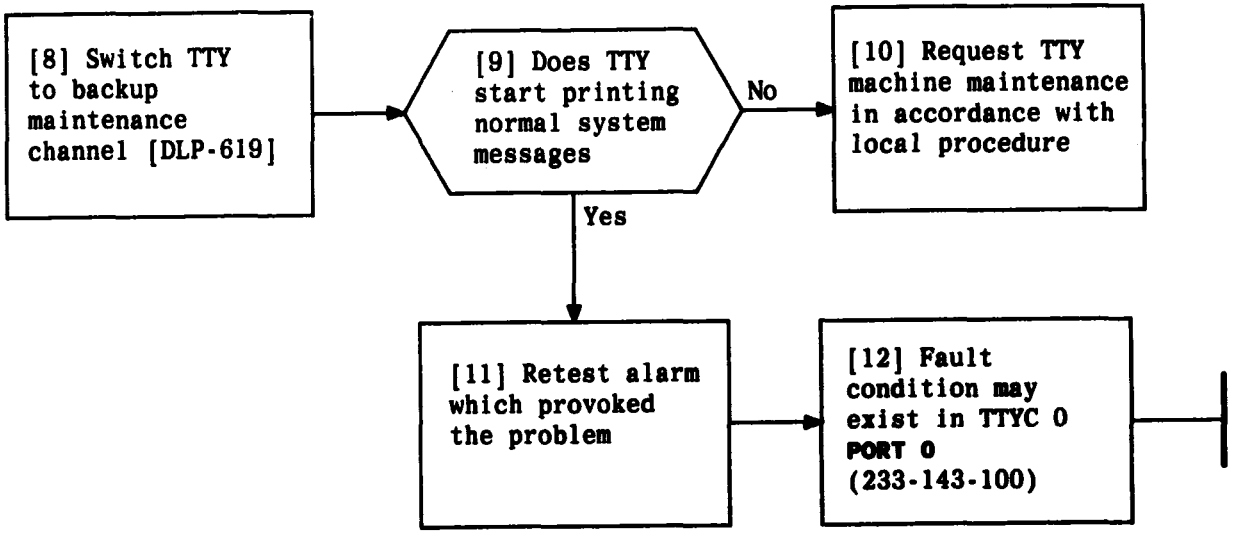

ANALYZE INCORRECT TTY ALARM REPORTING

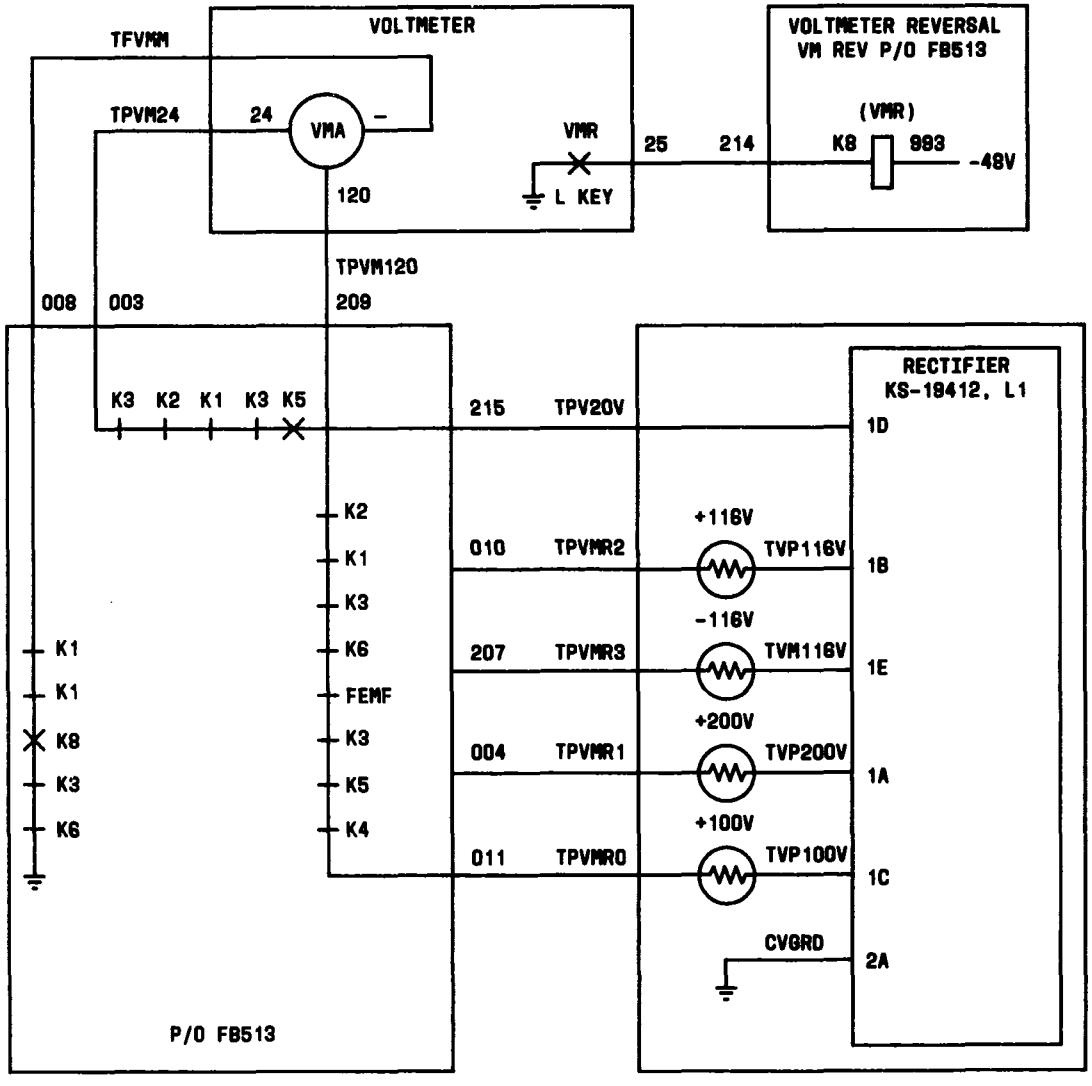

RELAY IDENTIFICATION	
RELAY	KEY
K1	–STA
K2	+STA
K3	BT
K4	20K
K5	1K
K6	MVM
K8	VMR

TRUNK AND LINE TEST PANEL TEST VOLTAGE CONNECTIONS

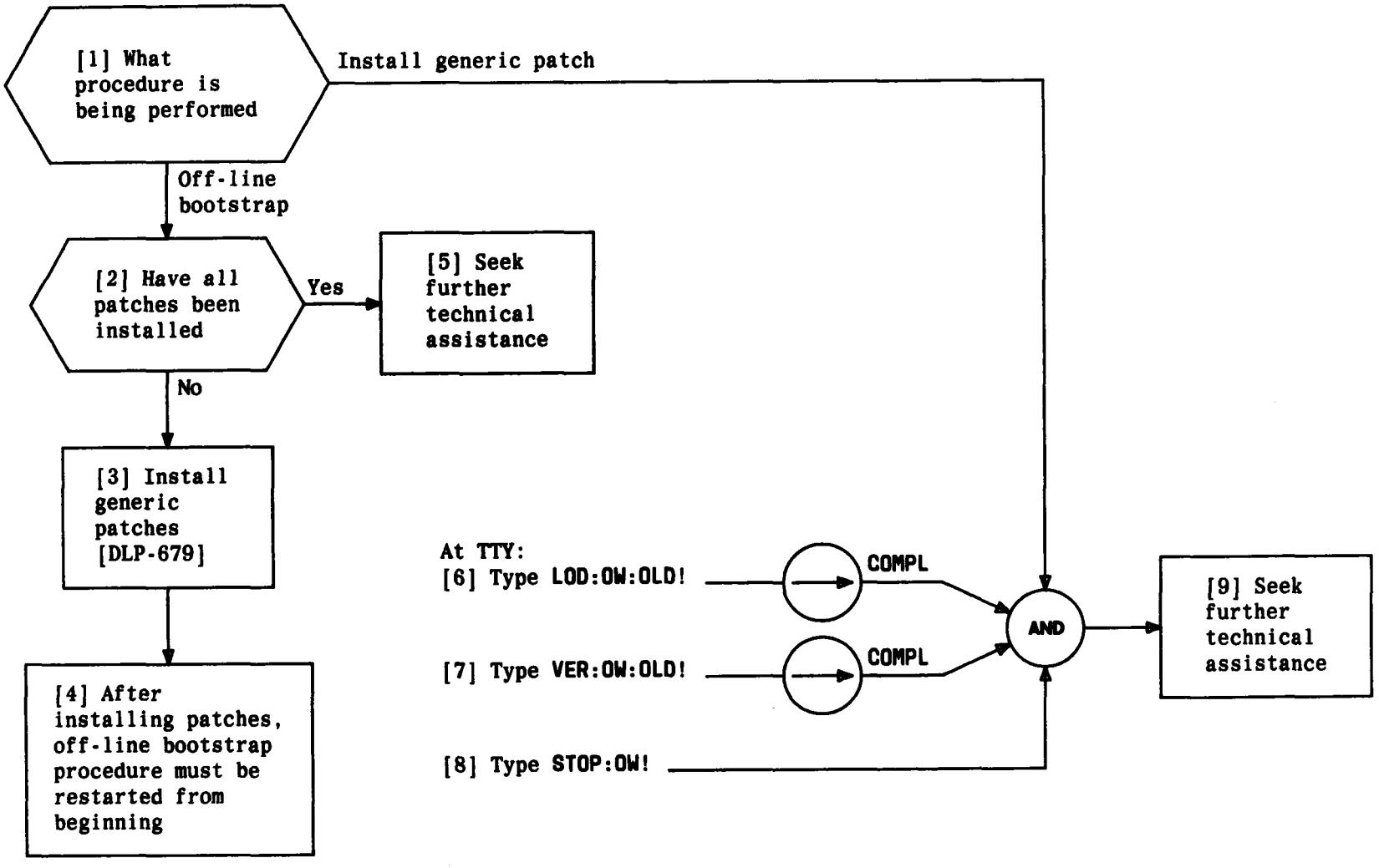

CORRECT GENERIC HASHSUM MISMATCH FOR OFFICES WITH 3E3 GENERIC OR LATER

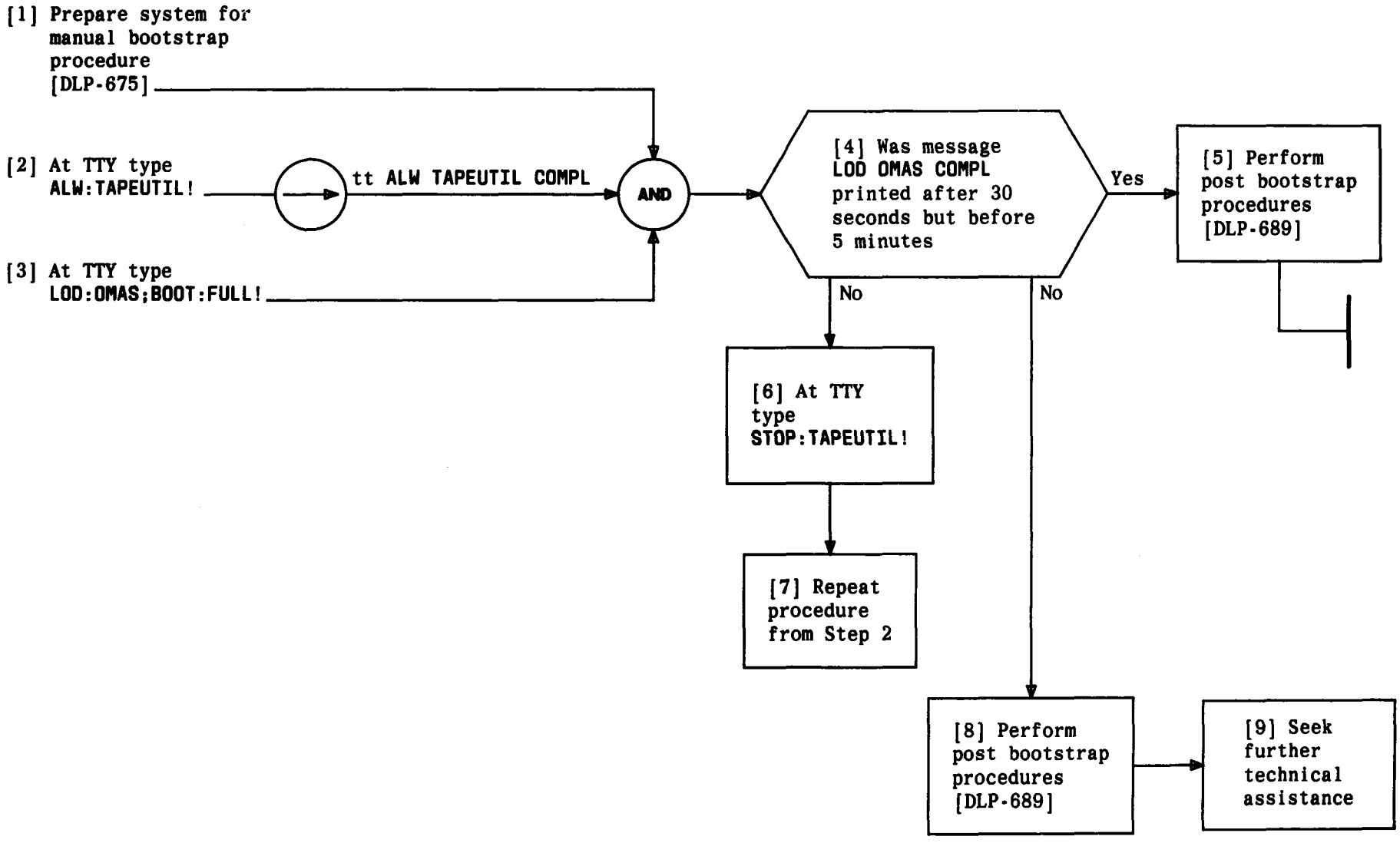

CLEAR BOOTSTRAP OPERATION TROUBLE FOR OFFICES WITH 3E3 GENERIC OR LATER

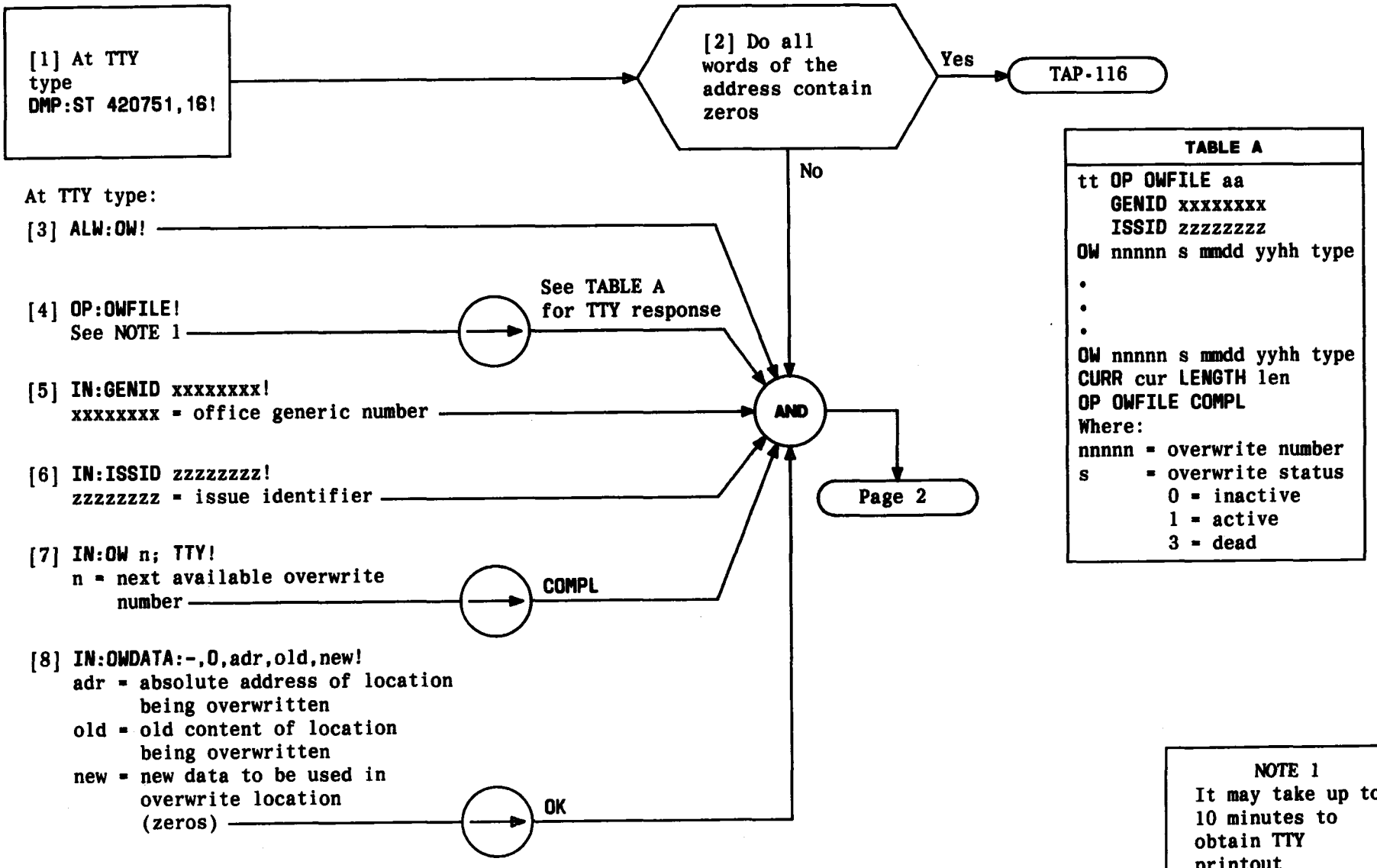

TABLE A
tt OP OWFILE aa GENID xxxxxxxx ISSID zzzzzzzz OW nnnnn s mmdd yyhh type • • • OW nnnnn s mmdd yyhh type CURR cur LENGTH len OP OWFILE COMPL Where: nnnnn = overwrite number s = overwrite status 0 = inactive 1 = active 3 = dead

NOTE 1
It may take up to 10 minutes to obtain TTY printout

CORRECT SCHEDULER TROUBLE

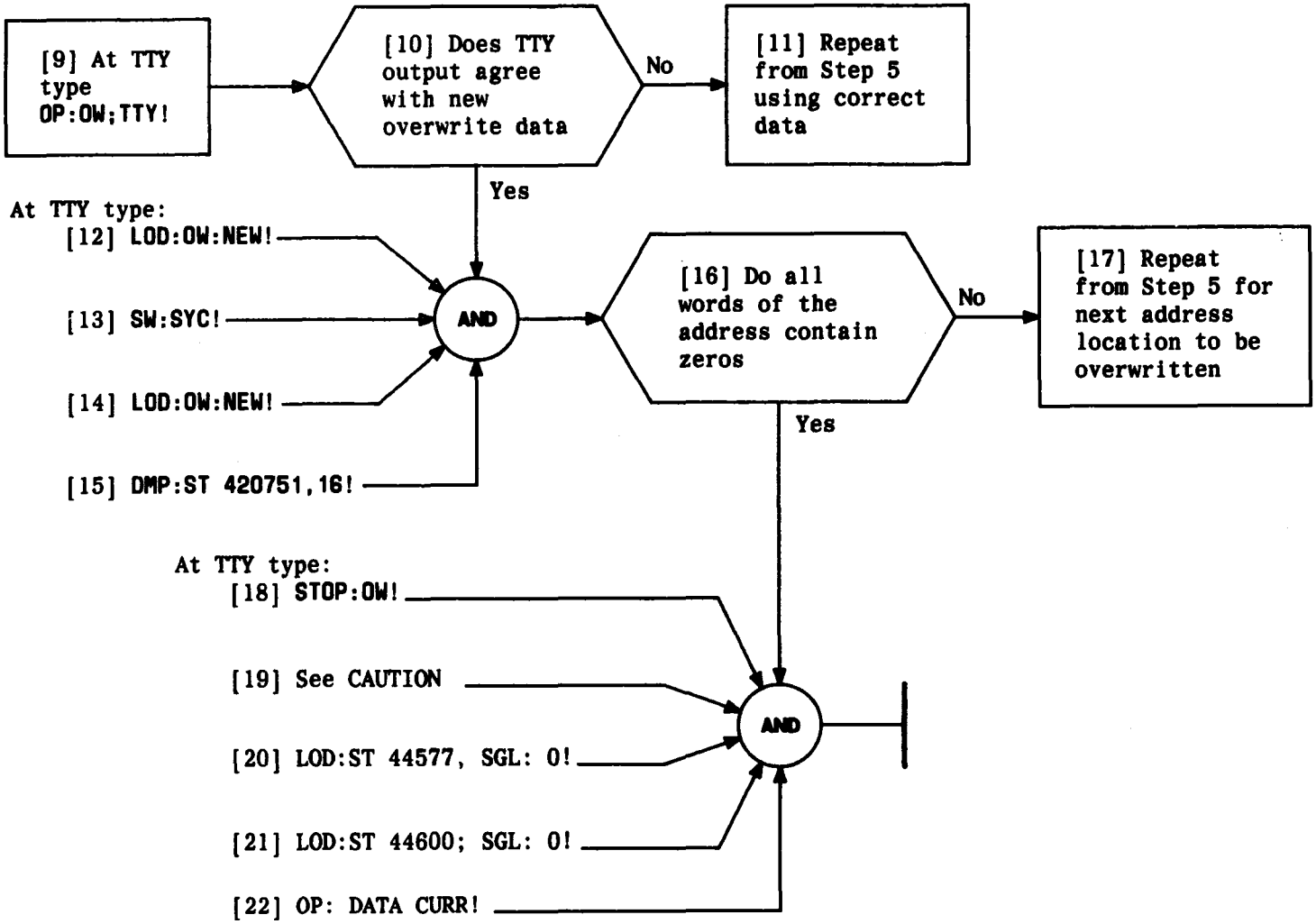

CAUTION
Using Steps 20 and 21 will eliminate any recent change items, and zero the first two words.

CORRECT SCHEDULER TROUBLE

DIAGNOSTIC TEST PROGRAMS

TEST NO.			
1	CDGMCH	MAINTENANCE CHANNEL	PR-1C912-32
2		GATING BUS	
3		CLOCK	
4		INITIALIZATION	
5	CDGTO	"TO" FIELD DECODER	PR-1C913-32
6		"FROM" FIELD DECODER	
7	CDGMLT	MULTIPLE "FROM" CROSSPOINTS	PR-1C914-32
8		MULTIPLE "TO" CROSSPOINTS	
9	CDGREG	GENERAL REGISTER GATING	PR-1C915-32
10		SPECIAL REGISTER GATING	
11	CDGMIC	MICRO STORE CONTENT	PR-1C916-32
12	CDGFN	FUNCTION REGISTER (DML)	PR-1C917-32
13		ADDER	
14		DML COMPARATOR	
15		BOOLEAN FUNCTIONS	
16		FIND LOW ZERO	
17		ROTATE	
18		PACK AND UNPACK	
19	CDGMC1	MICROCONTROL	PR-1C919-32
20		MICROCONTROL PT 2	
21		MICROCONTROL PT 3	
22		MICROCONTROL PT 4	
23	CDSPA1	DS FLIP-FLOP	PR-1C920-32
24		PA PLUS 1 ADDER	
25	CDGMSQ	STORE BUS CONTROLLER PT 1	PR-1C921-32
26		MAIN STORE BUS	
27	CDGSIO	MAIN STORE I/O ACCESS TO OFF-LINE STORE	PR-1C922-32
28		MAIN STORE-MAINTENANCE ORDERS	
29	CDGSMX	MAIN STORE MULTIPLEXOR	PR-1C923-32
30		MAIN STORE MULTIPLEXOR	
31		MAIN STORE MULTIPLEXOR	
32		MAIN STORE MULTIPLEXOR	
33	CDGSBS	MAIN STORE BUS - COMMANDS	PR-1C924-32
34		MAIN STORE BUS - ADDRESS	
35		MAIN STORE BUS - DATA	
36		MAIN STORE BUS - CONTROL	
37	CDGSCP	NORMAL SELECT SIGNAL TO FANOUT BOARDS	PR-1C934-32
38		DATA PARITY CHECK	
39		REFRESH SELECT	
40		ADDRESS SIGNAL	
41	CDGSFA	MAIN STORE FANOUT ADDRESS PARITY	PR-1C925-32
42		MAIN STORE FANOUT ADDRESS SIGNALS THRU MEMORY MODULES	
43		ADDRESS PARITY CHECKERS	
44		ADDRESS PARITY CHECKERS	
45	CDGSFB	MAIN STORE FANOUT BOARDS	PR-1C926-32
46		MAIN STORE FANOUT BOARDS	
47		MAIN STORE FANOUT BOARDS	
48		MAIN STORE FANOUT BOARDS	
49	CDGSWP	MAIN STORE WRITE PROTECT	PR-1C927-32
50		MAIN STORE WRITE PROTECT	
51		MAIN STORE WRITE PROTECT	
52	CDGSON	INTERPROCESSOR STORE BUS	PR-1C928-32
53	CDGSDF	MAIN STORE CONTROLLER DATA TEST	PR-1C935-32
54		MAIN STORE CONTROLLER DATA TEST	
55		MAIN STORE CONTROLLER DATA TEST	
56		MAIN STORE CONTROLLER DATA TEST	

DIAGNOSTIC TEST PROGRAMS

TEST NO.			
57	CDGSD	MAIN STORE MEMORY MODULE TEST PATTERN (0)	PR-1C929-32
58		MAIN STORE MEMORY MODULE TEST PATTERN (1)	
59		MAIN STORE MEMORY MODULE TEST PATTERN (2)	
60		MAIN STORE MEMORY MODULE TEST PATTERN (3)	
61		MAIN STORE MEMORY MODULE TEST PATTERN (4)	
62		MAIN STORE MEMORY MODULE TEST PATTERN (5)	
63		MAIN STORE MEMORY MODULE TEST PATTERN (6)	
64		MAIN STORE MEMORY MODULE TEST PATTERN (7)	
65	CDGMI	MICROINTERPRET	PR-1C930-32
66		MULTIPLE MISC. XPOINTS	
67		DML PARITY GENERATOR	
68		GATING BUS PARITY CHECKER	
69		IB X AND Y FIELD PARITY GENERATOR	
70	CDGNTI	PROGRAM TIMER-TIMING COUNTER	PR-1C931-32
71		INTERRUPT	
72		ADDRESS MATCHER	
73		DATA MATCHER	
74		I/O TEST	
75	CSTATS	SYSTEM STATES 1	PR-1C932-32
76		SYSTEM STATES 2 (PROGRAM TIMER TIMEOUT)	
77		SYSTEM STATUS PANEL TEST	
78	CDGDSR	DOUBLE STORE READ	PR-1C911-32
79		DUMMY	

SCHEMATIC DRAWING
SD-1C900-01

CU DIAGNOSTIC PROGRAM NAMES, PR NUMBERS

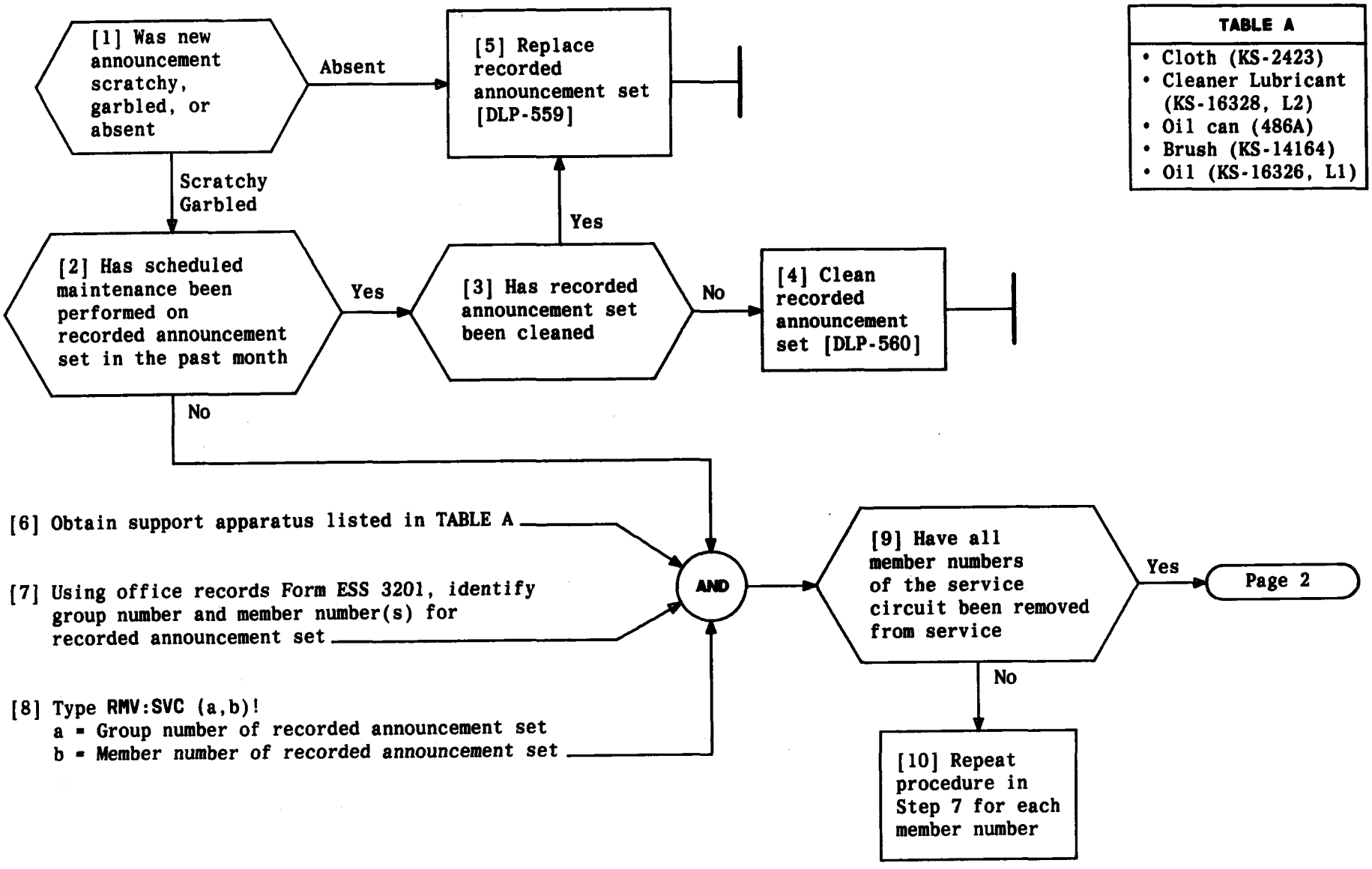

TABLE A
• Cloth (KS-2423)
• Cleaner Lubricant (KS-16328, L2)
• Oil can (486A)
• Brush (KS-14164)
• Oil (KS-16326, L1)

CLEAR TROUBLE IN RECORDED ANNOUNCEMENT SET

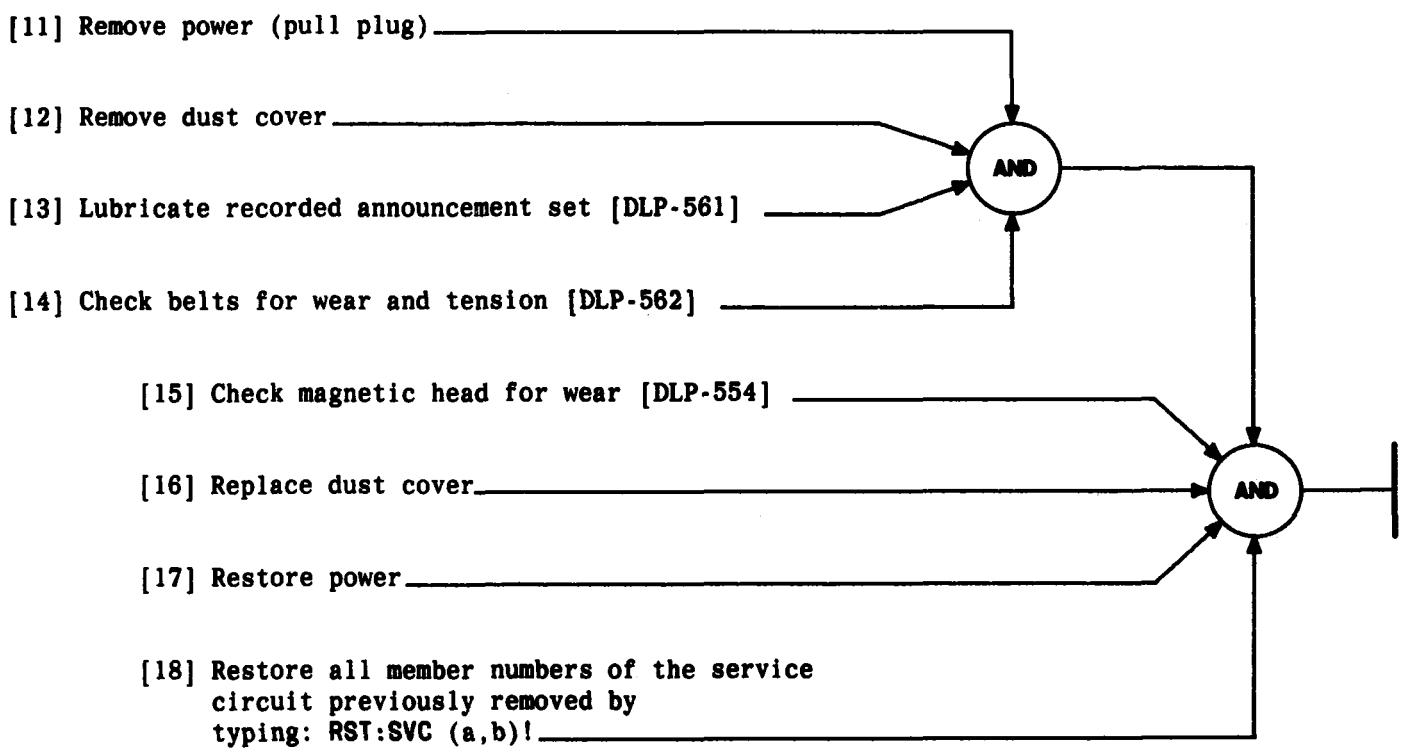

CLEAR TROUBLE IN RECORDED ANNOUNCEMENT SET

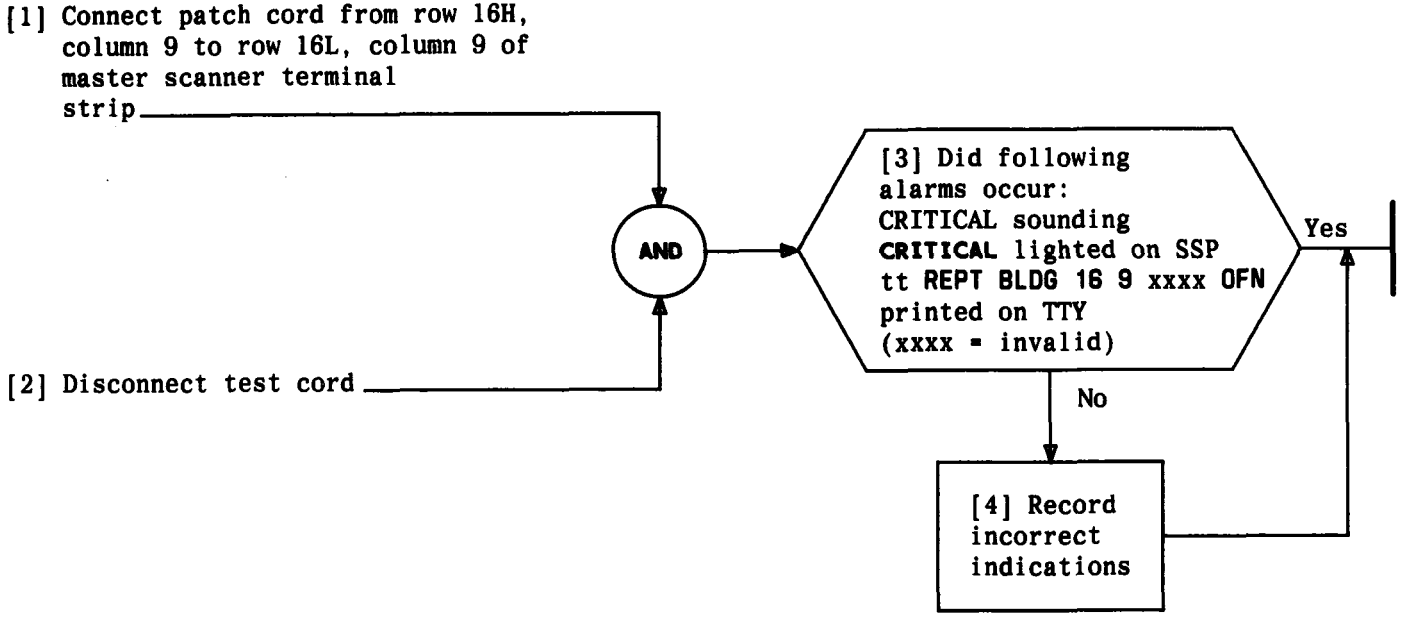

TEST FIRE ALARM

Issue 3	AUG 1984
233-142-100	DLP
PAGE 1 of 1	500

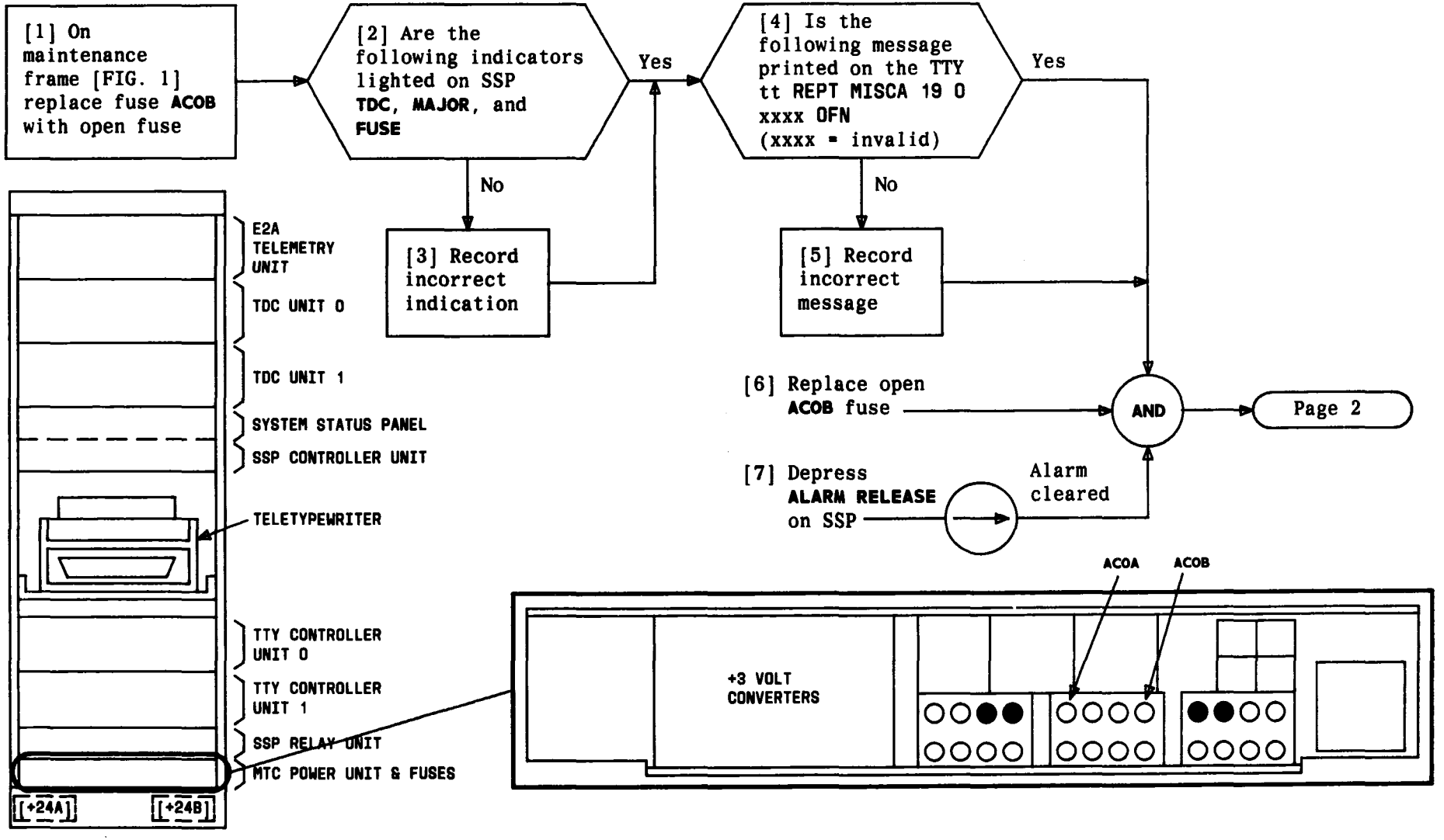

FIG. 1 – Maintenance Frame

TEST TAPE DATA CONTROLLER POWER ALARM

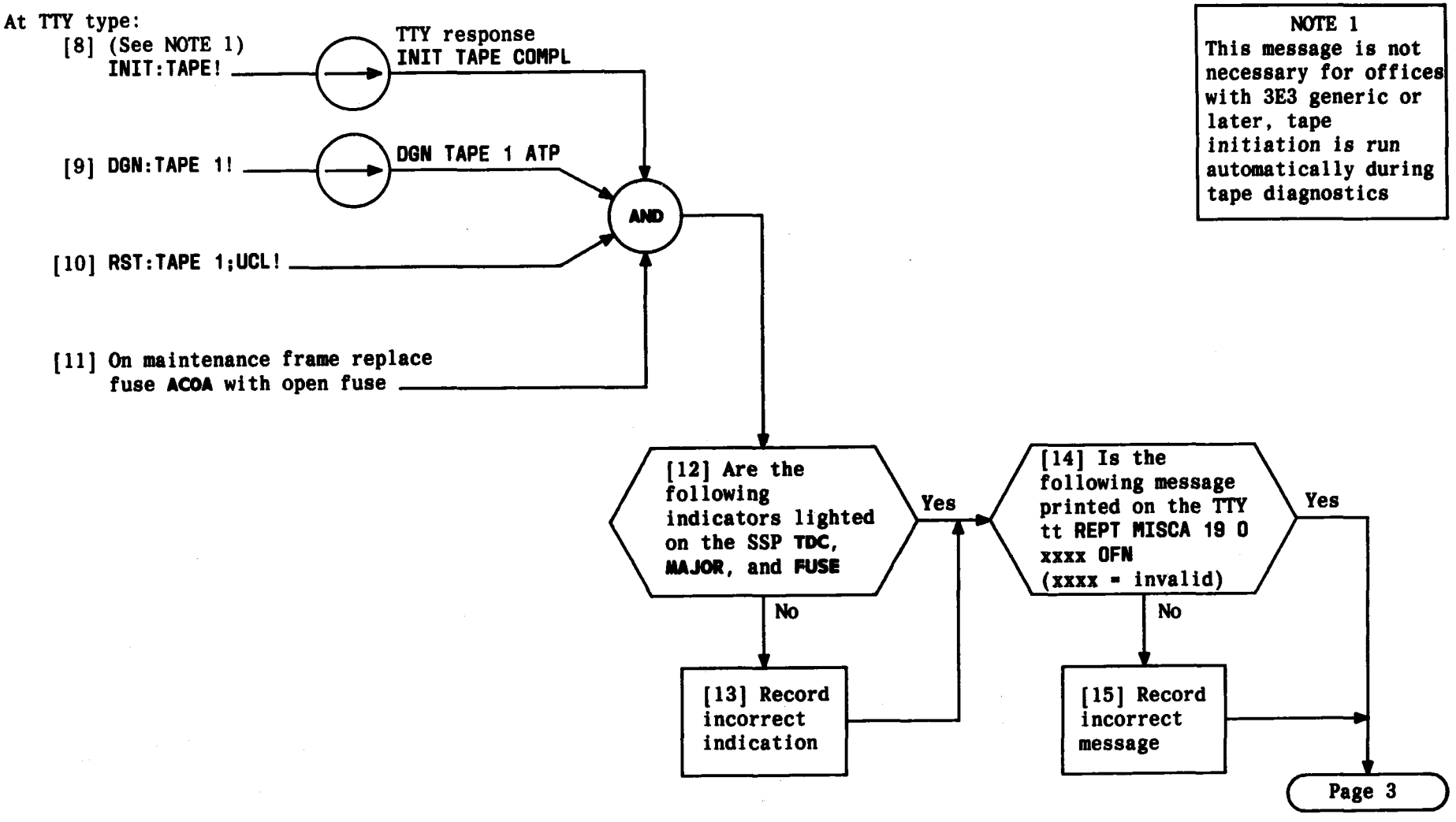

TEST TAPE DATA CONTROLLER POWER ALARM

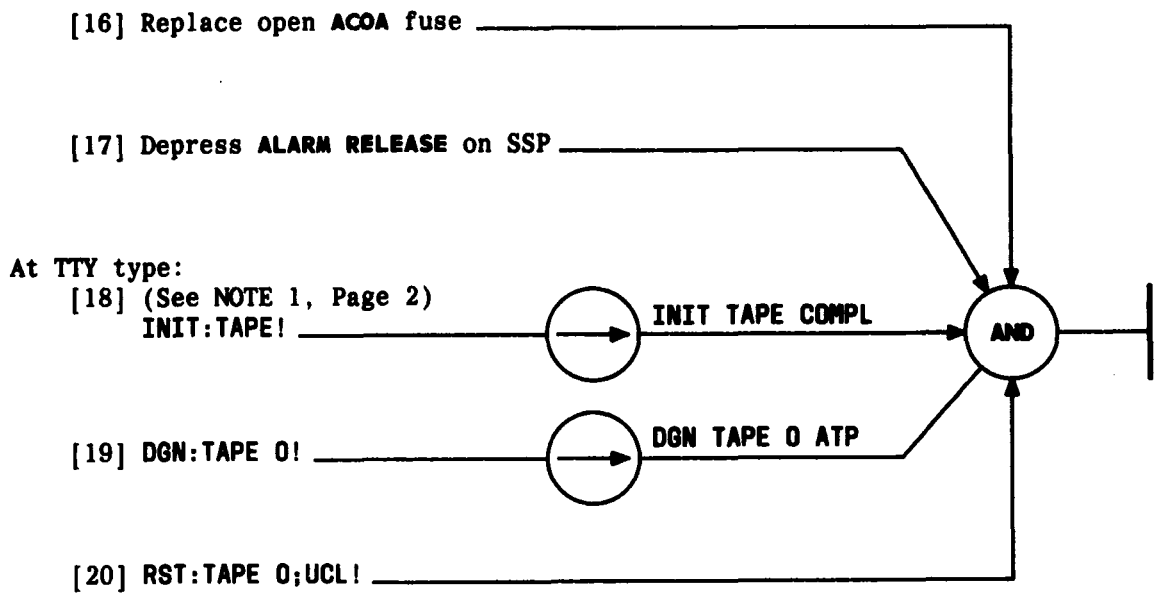

TEST TAPE DATA CONTROLLER POWER ALARM

[1] On maintenance frame [FIG. 1] replace fuse **BOB** with open fuse

[2] Depress **POWER RESET** key at bottom of 3A CC unit

AND

[3] Are the following indicators lighted on SSP **MAJOR**, **MINOR** and **FUSE**

Yes → Page 2

No → [4] Record incorrect indication

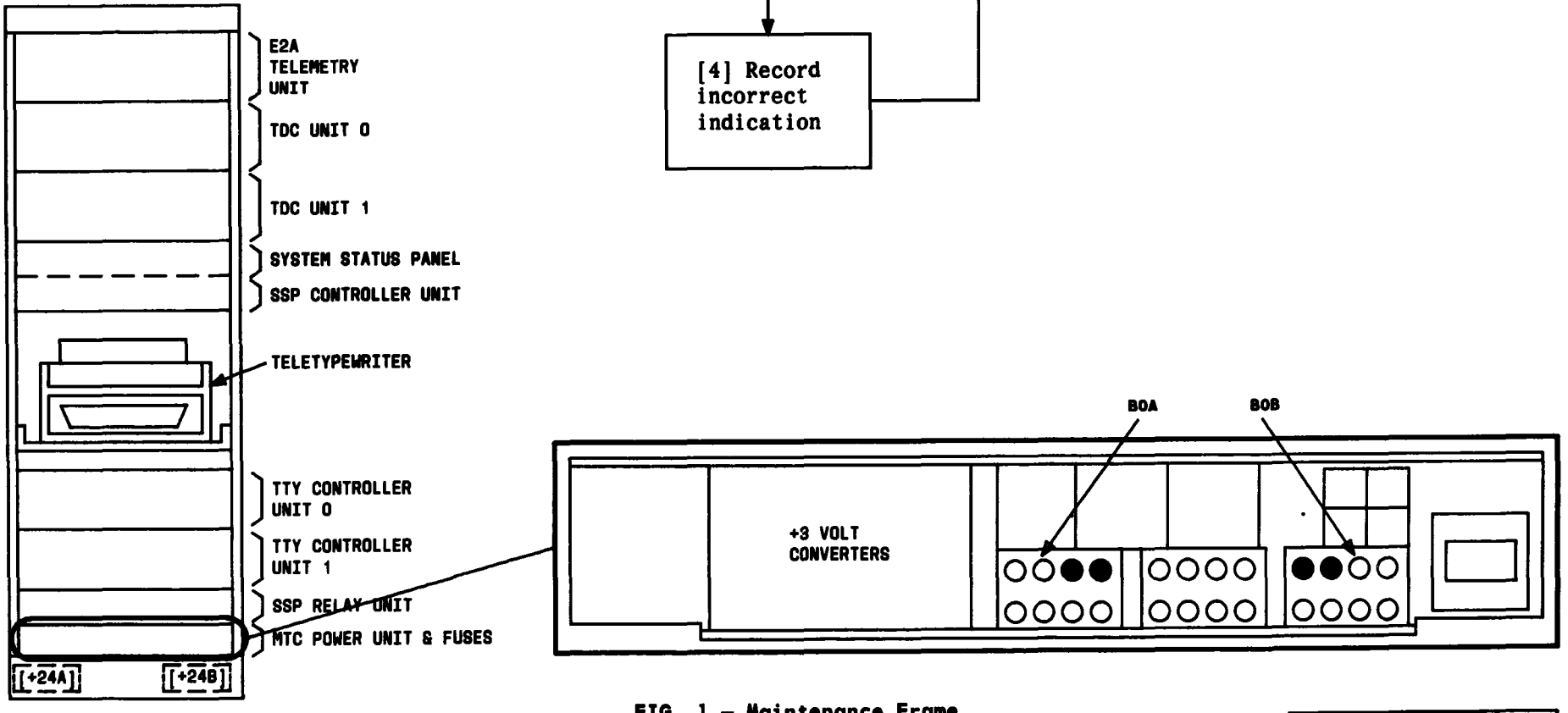

FIG. 1 – Maintenance Frame

TEST TTY CONTROLLER POWER ALARM

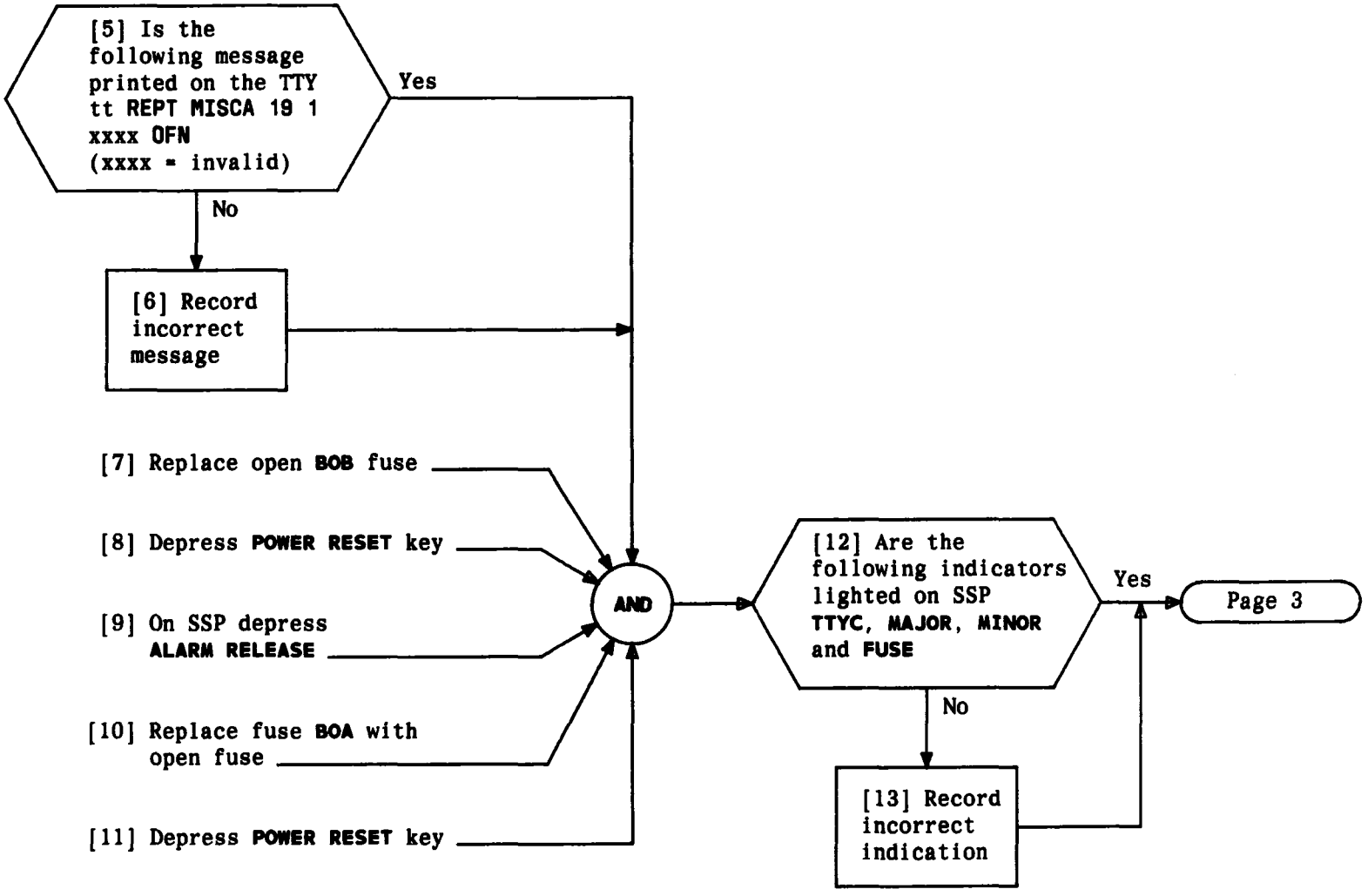

TEST TTY CONTROLLER POWER ALARM

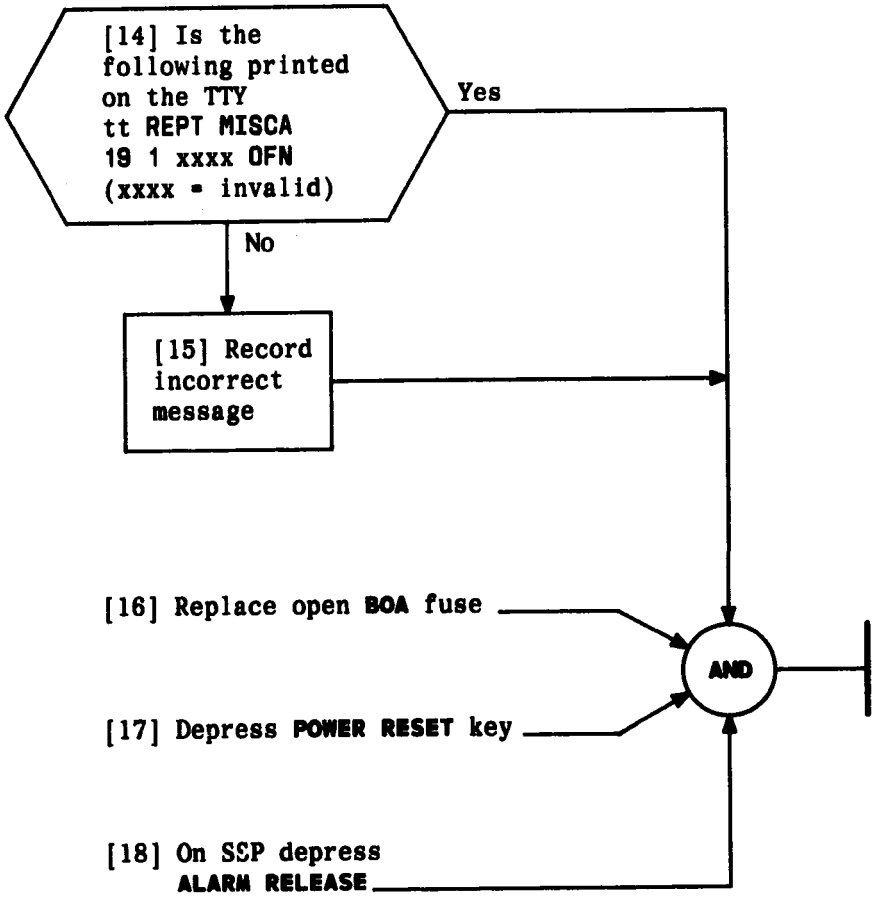

TEST TTY CONTROLLER POWER ALARM

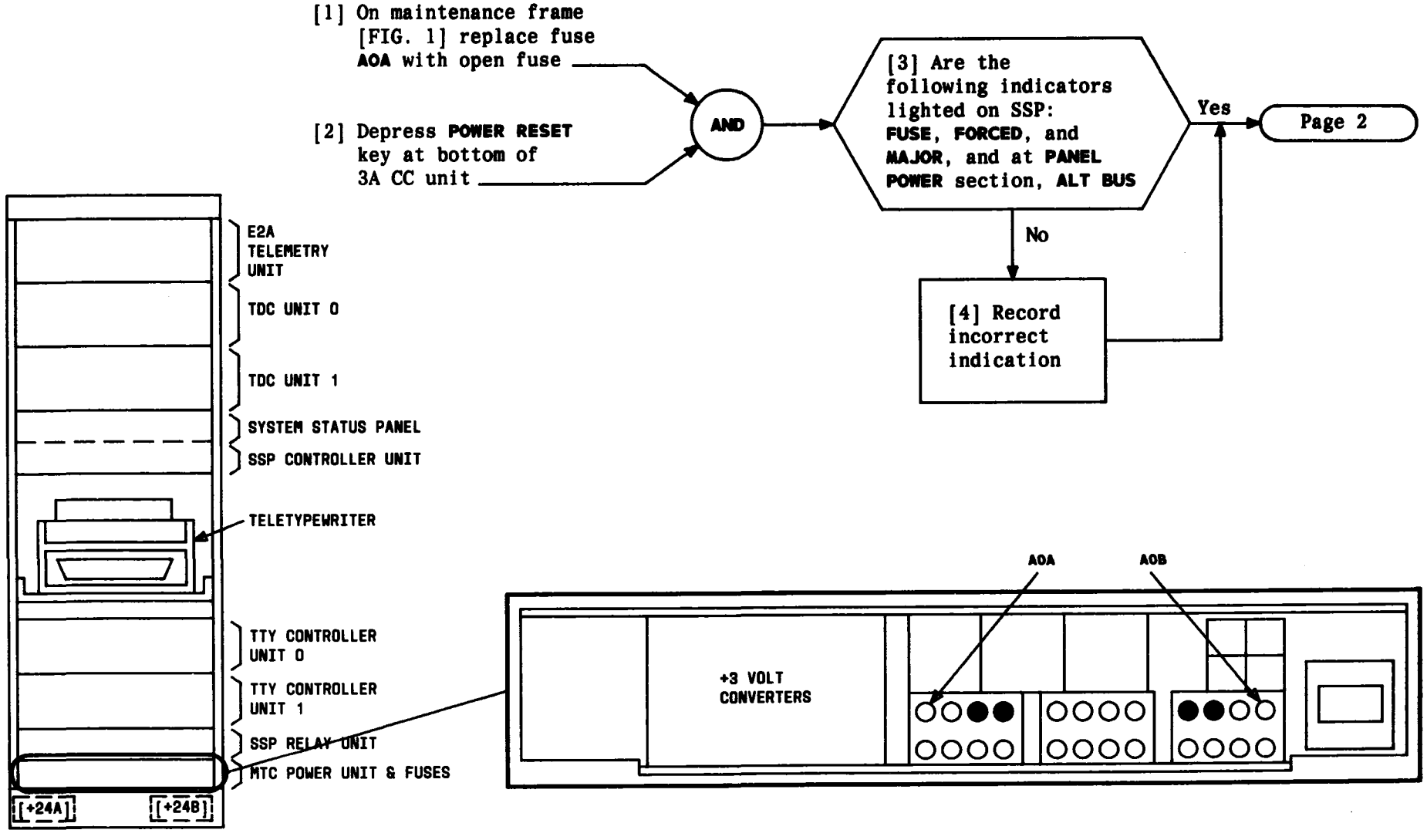

FIG. 1 – Maintenance Frame

TEST SYSTEM STATUS PANEL POWER ALARM

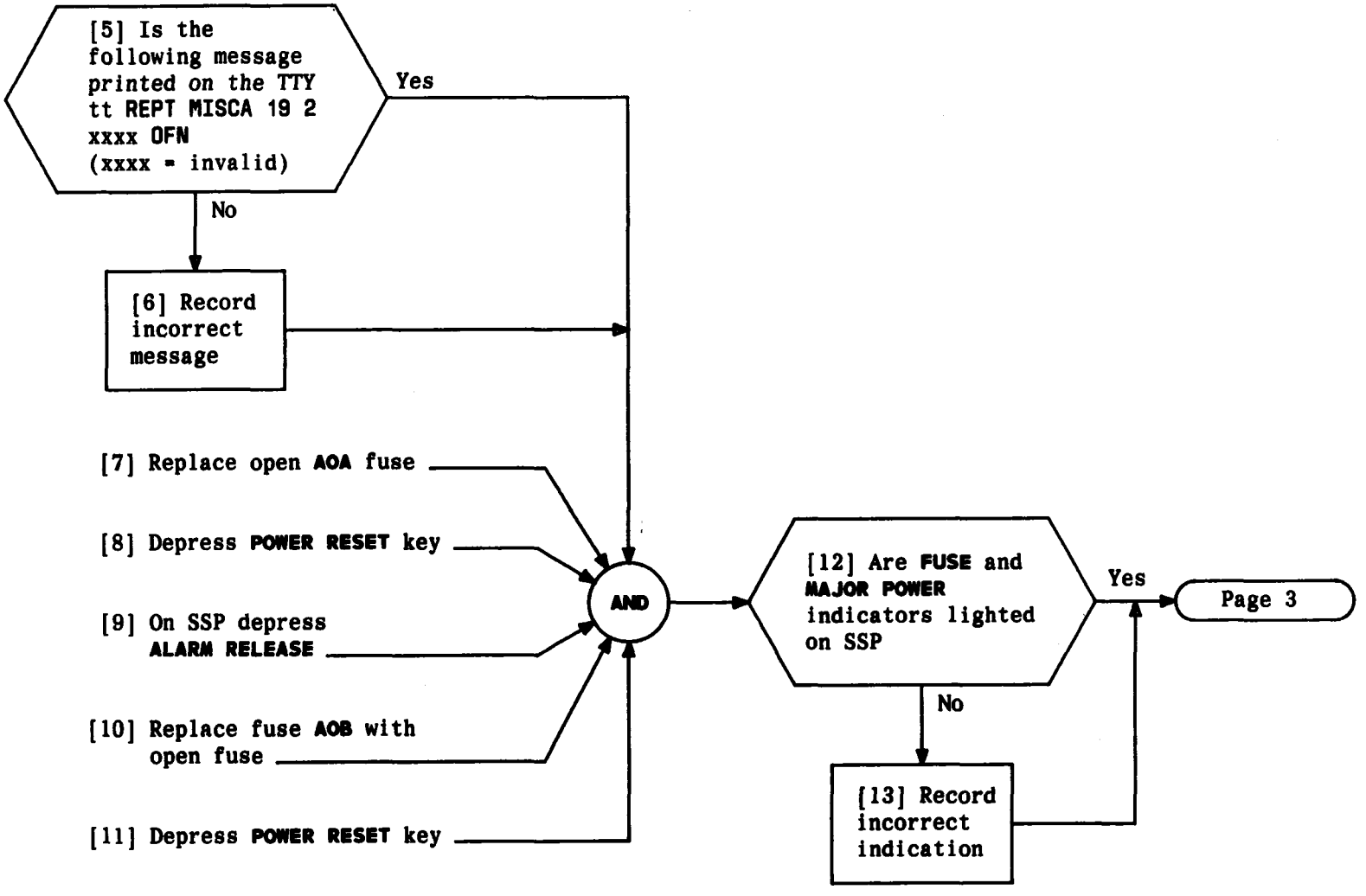

TEST SYSTEM STATUS PANEL POWER ALARM

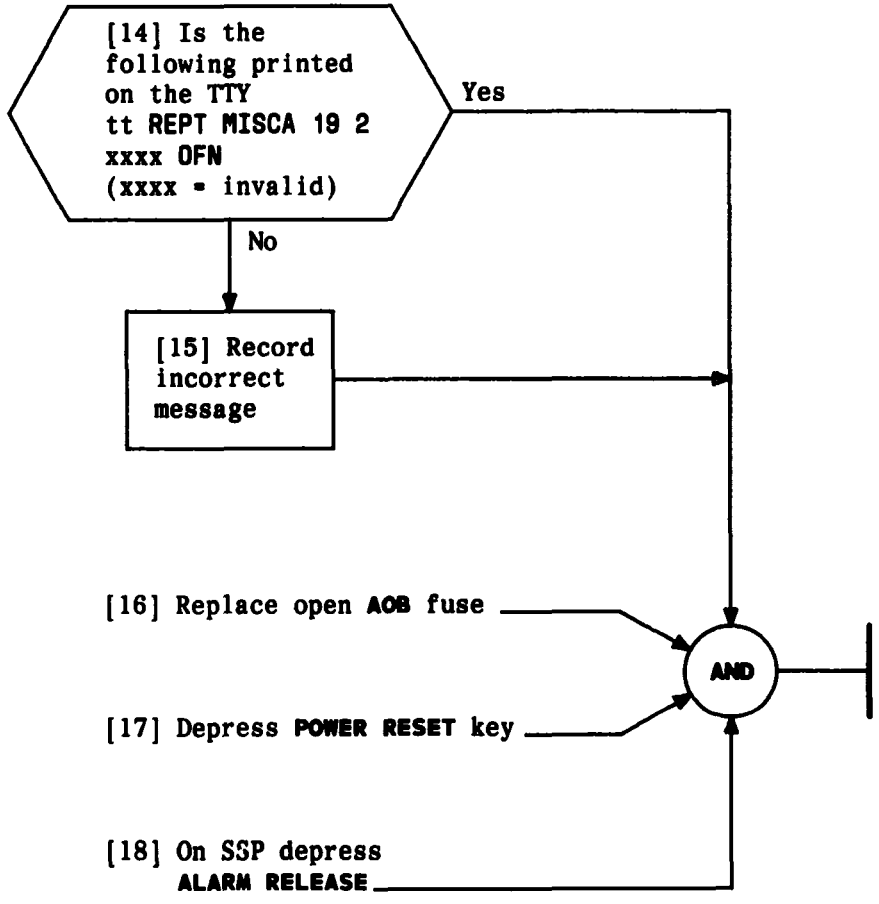

TEST SYSTEM STATUS PANEL POWER ALARM

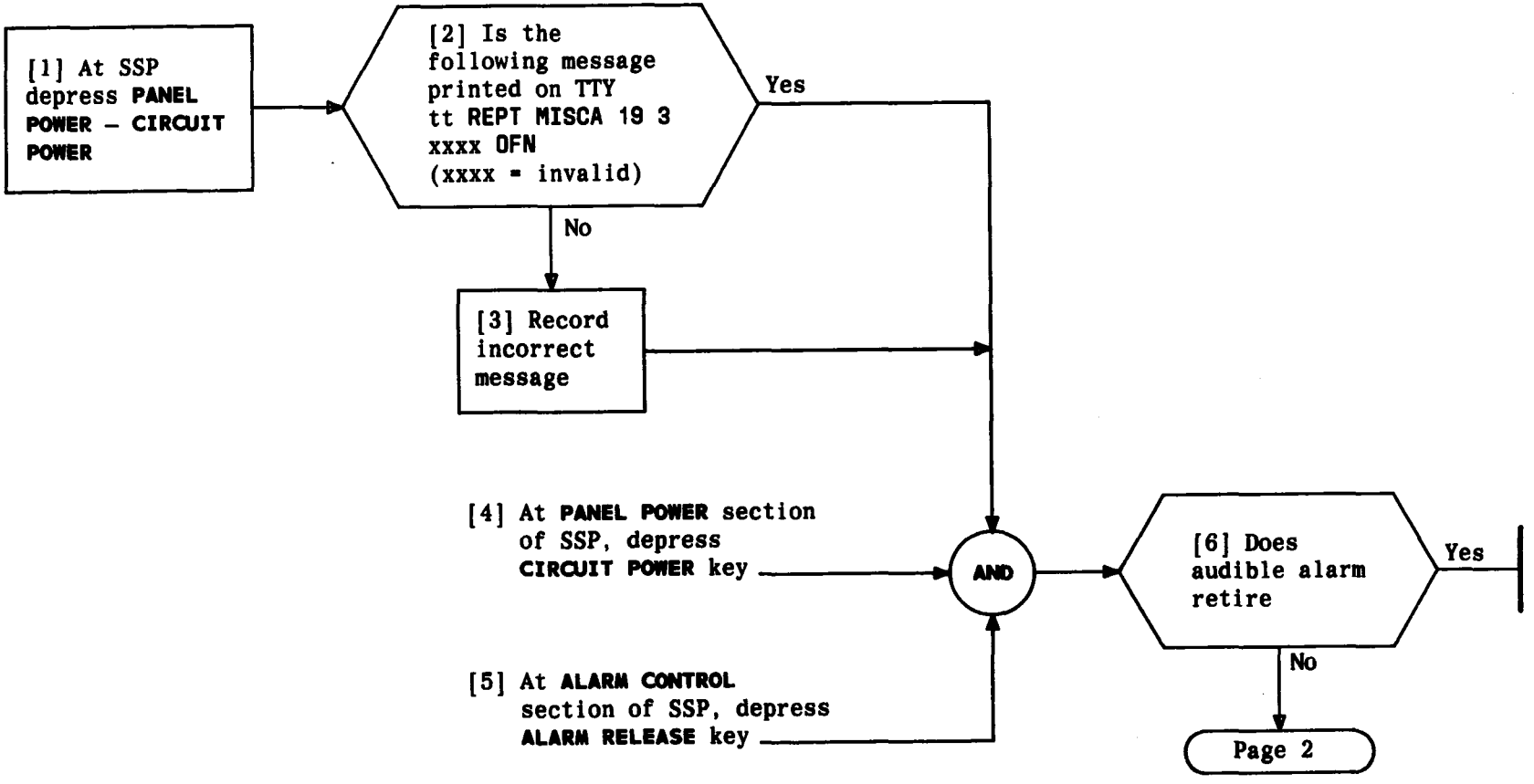

TEST SYSTEM STATUS PANEL POWER STATUS SWITCHING

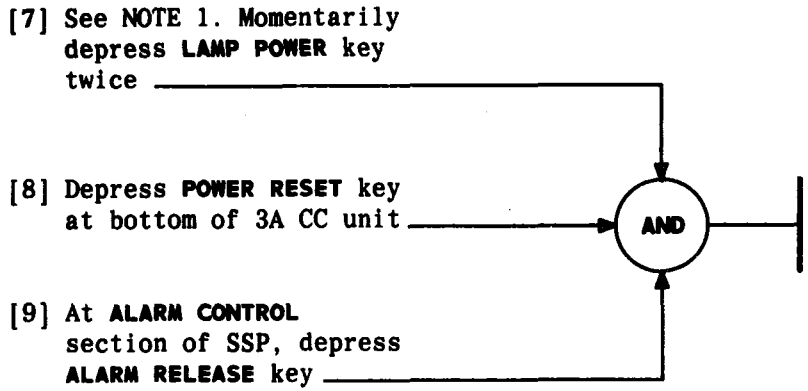

NOTE 1
This will create an alarm condition to retire the audible alarm

TEST SYSTEM STATUS PANEL POWER STATUS SWITCHING

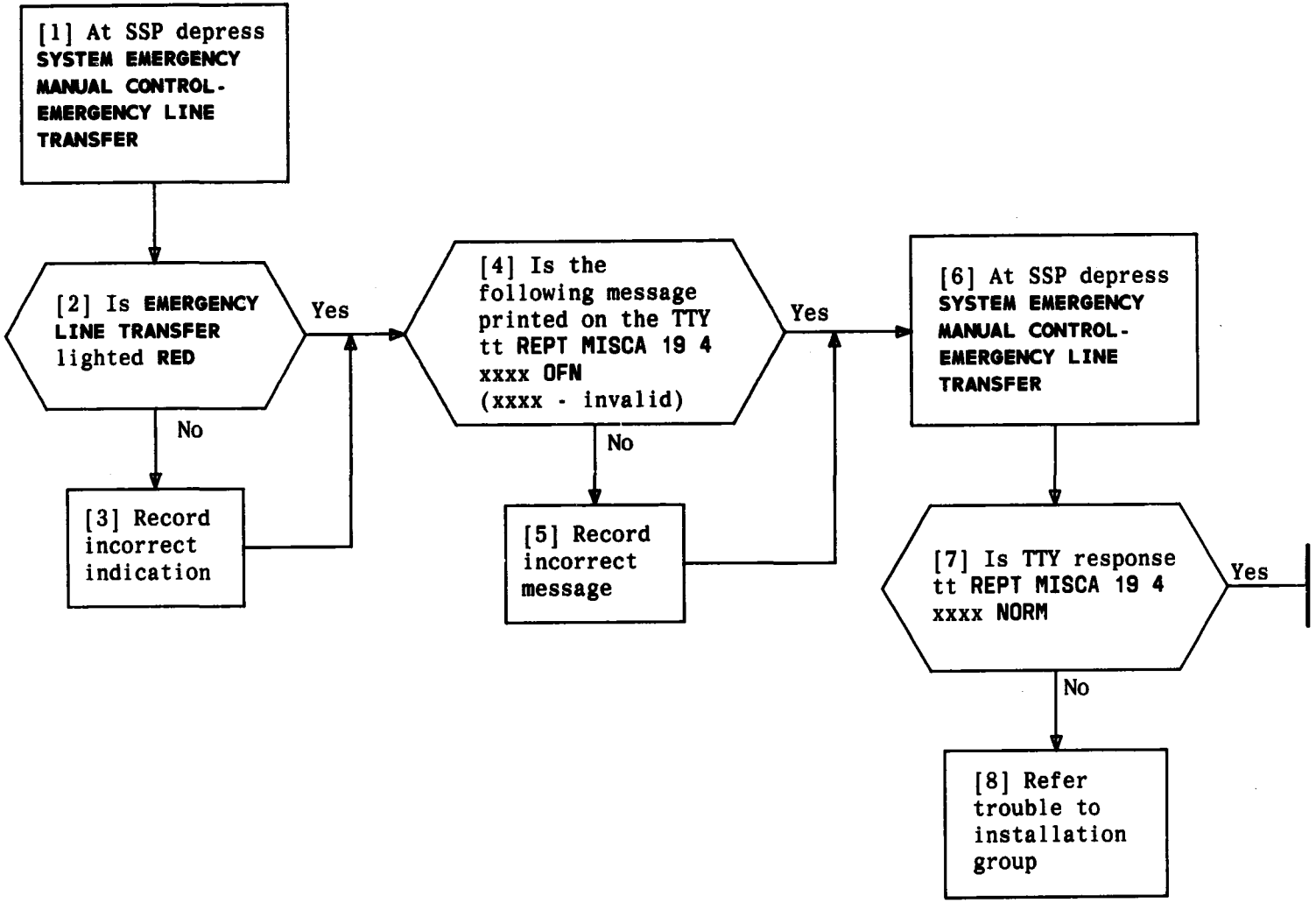

TEST EMERGENCY LINE TRANSFER STATUS

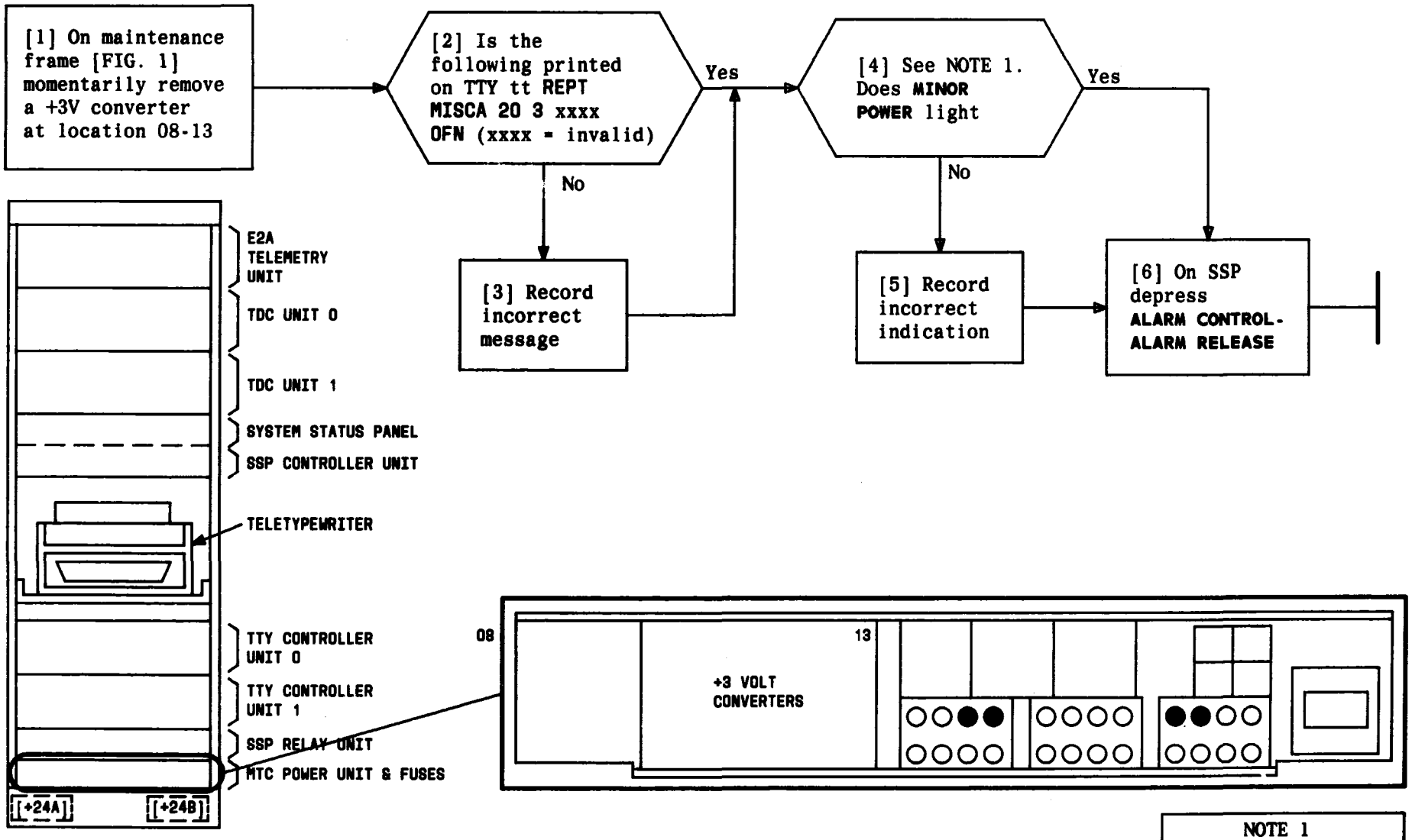

FIG. 1 – Maintenance Frame

NOTE 1
Ignore other alarm indications received

Issue 3	AUG 1984
233-142-100	DLP
PAGE 1 of 1	506

TEST MAINTENANCE FRAME CONVERTER LIMIT ALARM

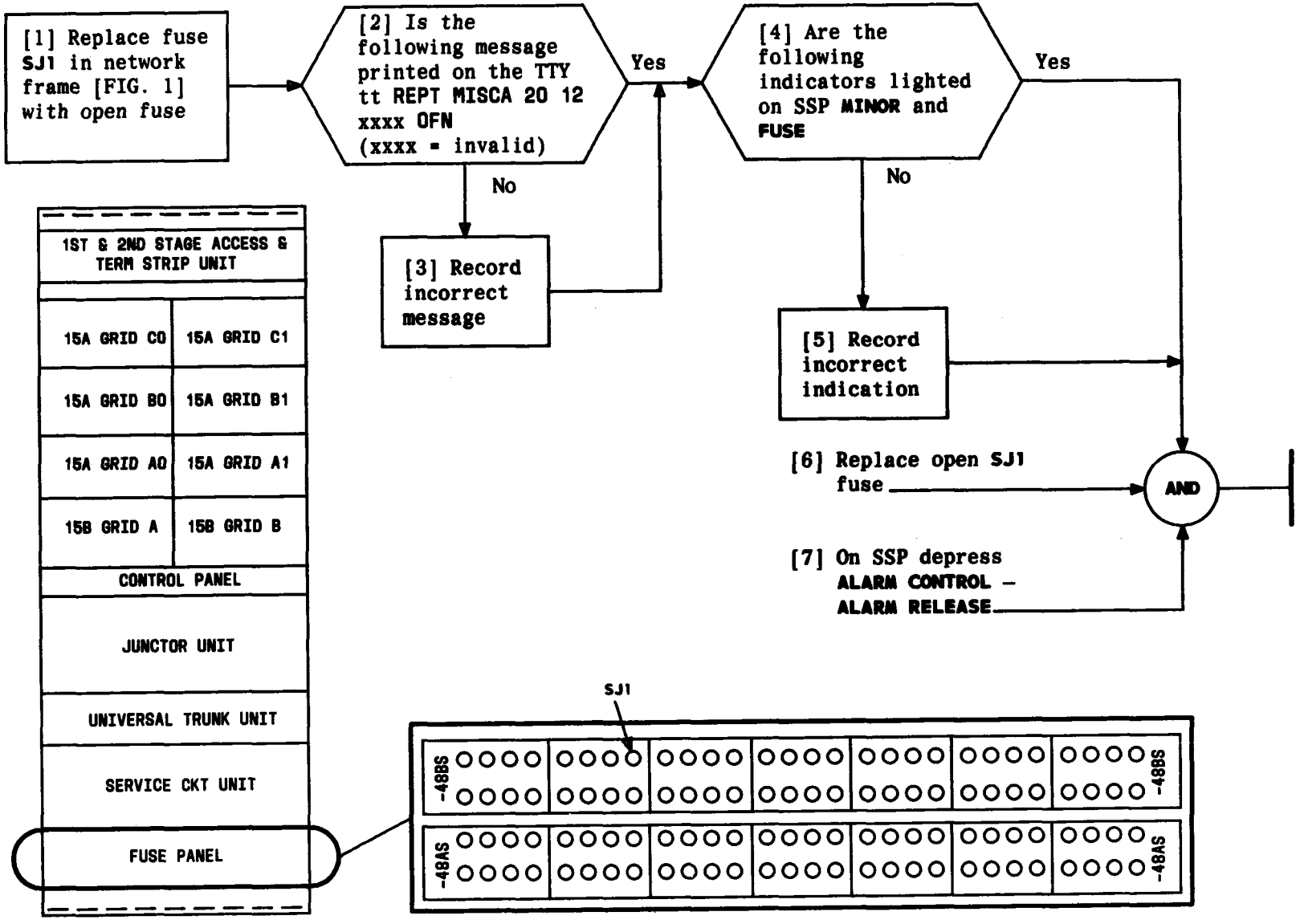

FIG. 1 – Network Frame

TEST TRUNK JUNCTOR AND SERVICE CIRCUIT FUSE ALARM

TEST LINE FERROD FUSE ALARM

[1] Replace fuse **BJ0** in network frame [FIG. 1] with open fuse

[2] Is the following message printed on the TTY
tt **REPT MISCA 20 12**
xxxx **OFN**
(xxxx = invalid)

Yes

No

[3] Record incorrect message

[4] On SSP are the following indicators lighted **ALARMS – FUSE** and **MINOR**

Yes

No

[5] Record incorrect indication

[6] Replace open **BJ0** fuse

[7] On SSP depress **ALARM CONTROL – ALARM RELEASE**

AND

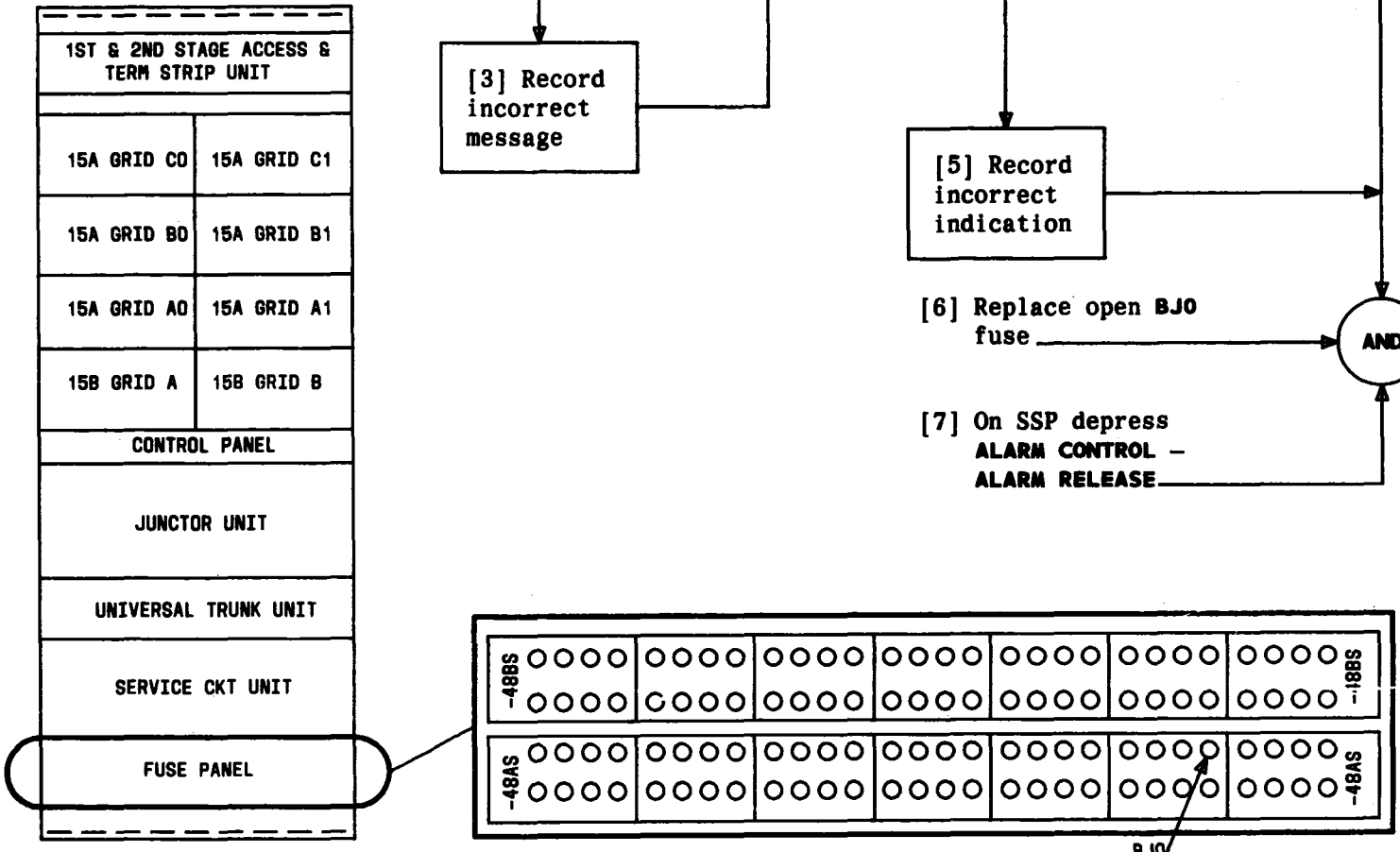

FIG. 1 – Network Frame

Issue 3	AUG 1984
233-142-100	DLP
PAGE 1 of 1	508

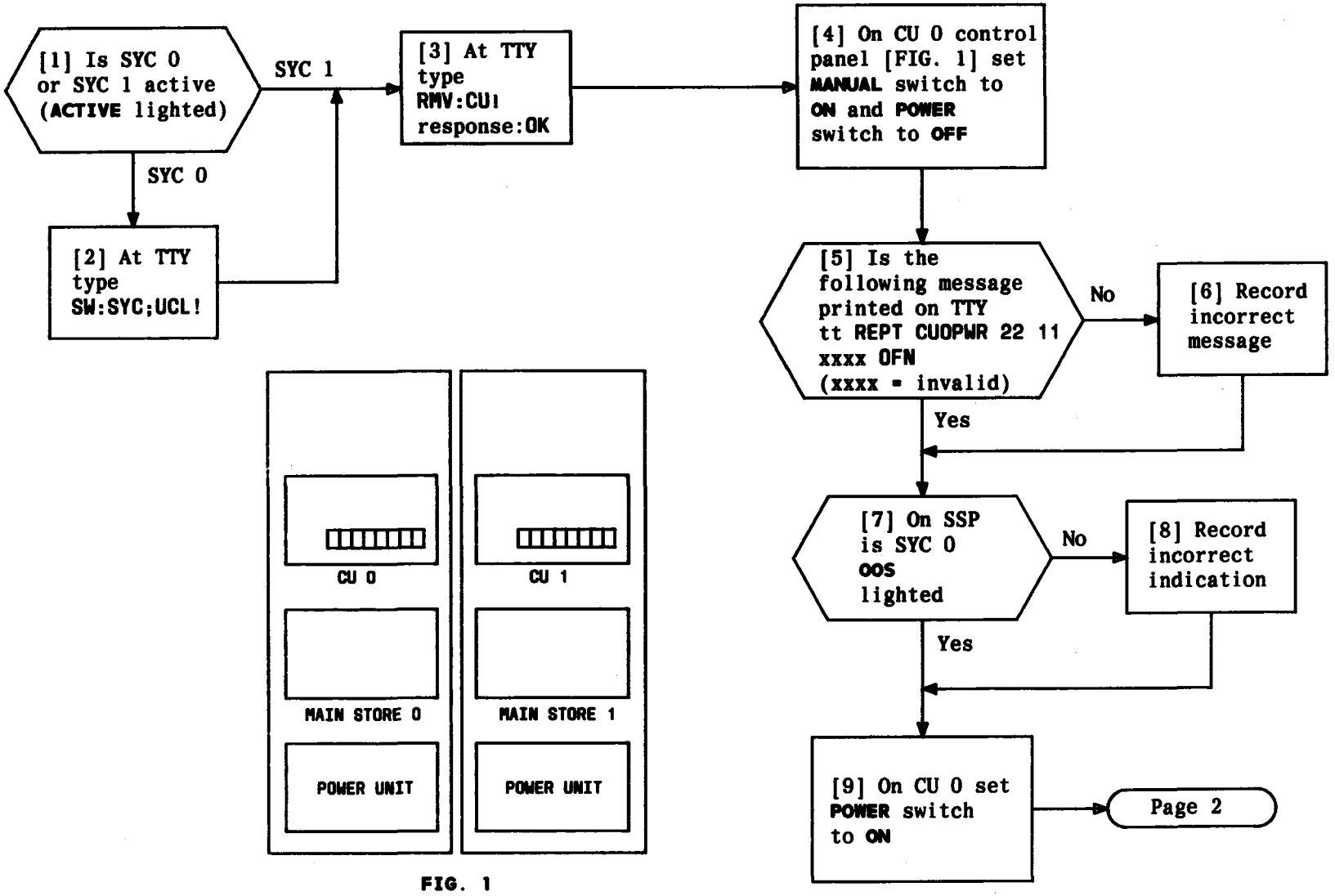

FIG. 1

TEST CONTROL UNIT 0 POWER ALARM

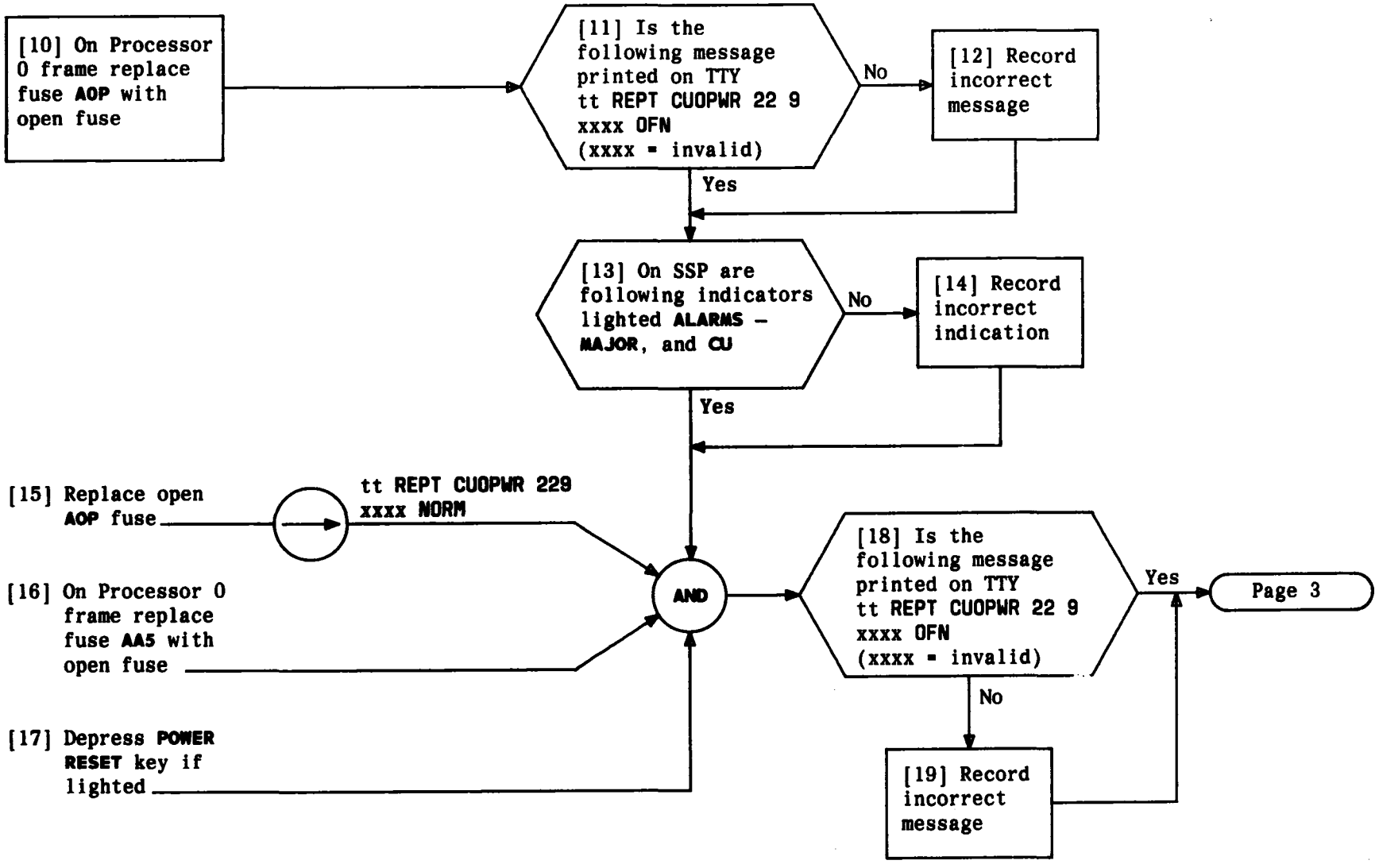

TEST CONTROL UNIT 0 POWER ALARM

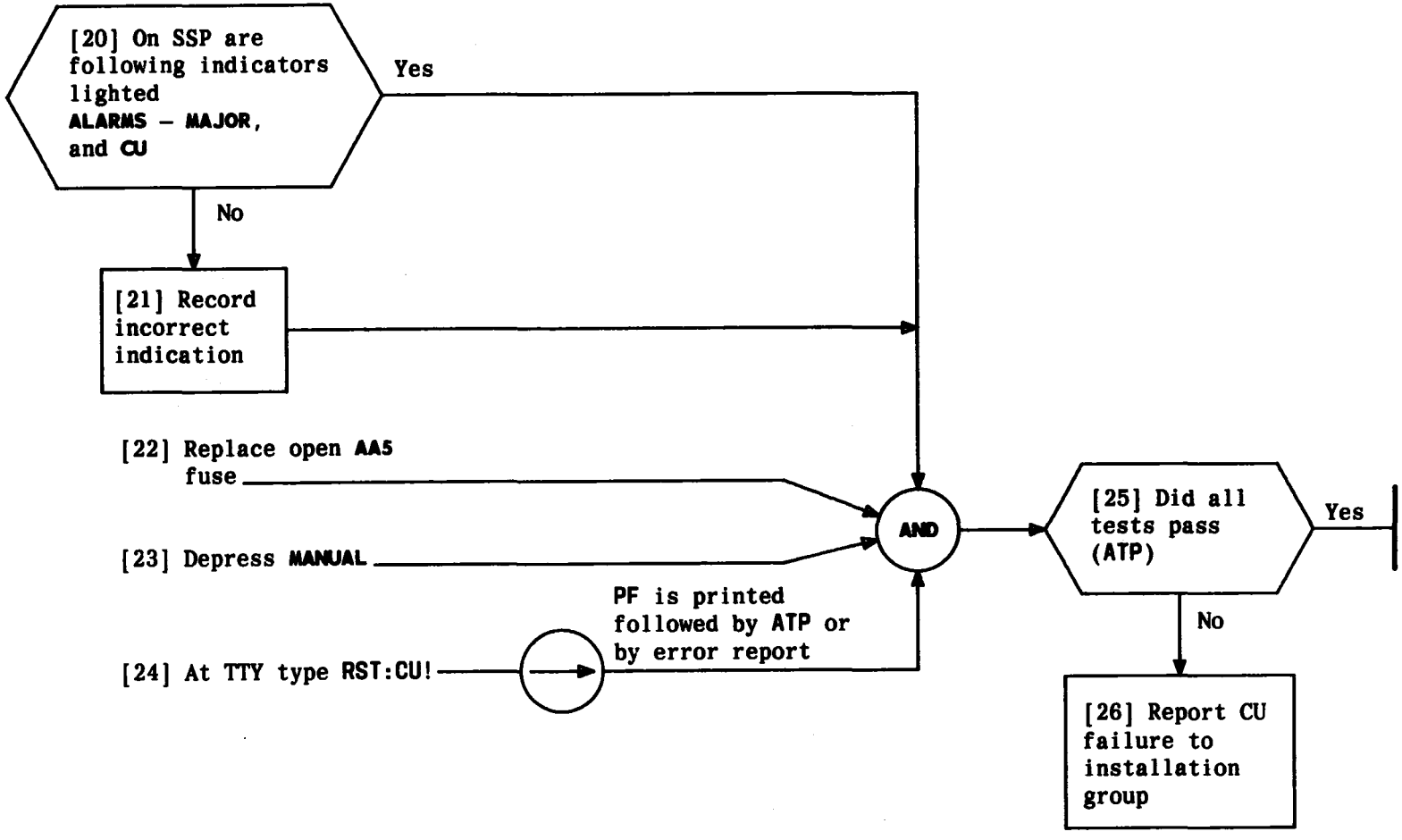

TEST CONTROL UNIT 0 POWER ALARM

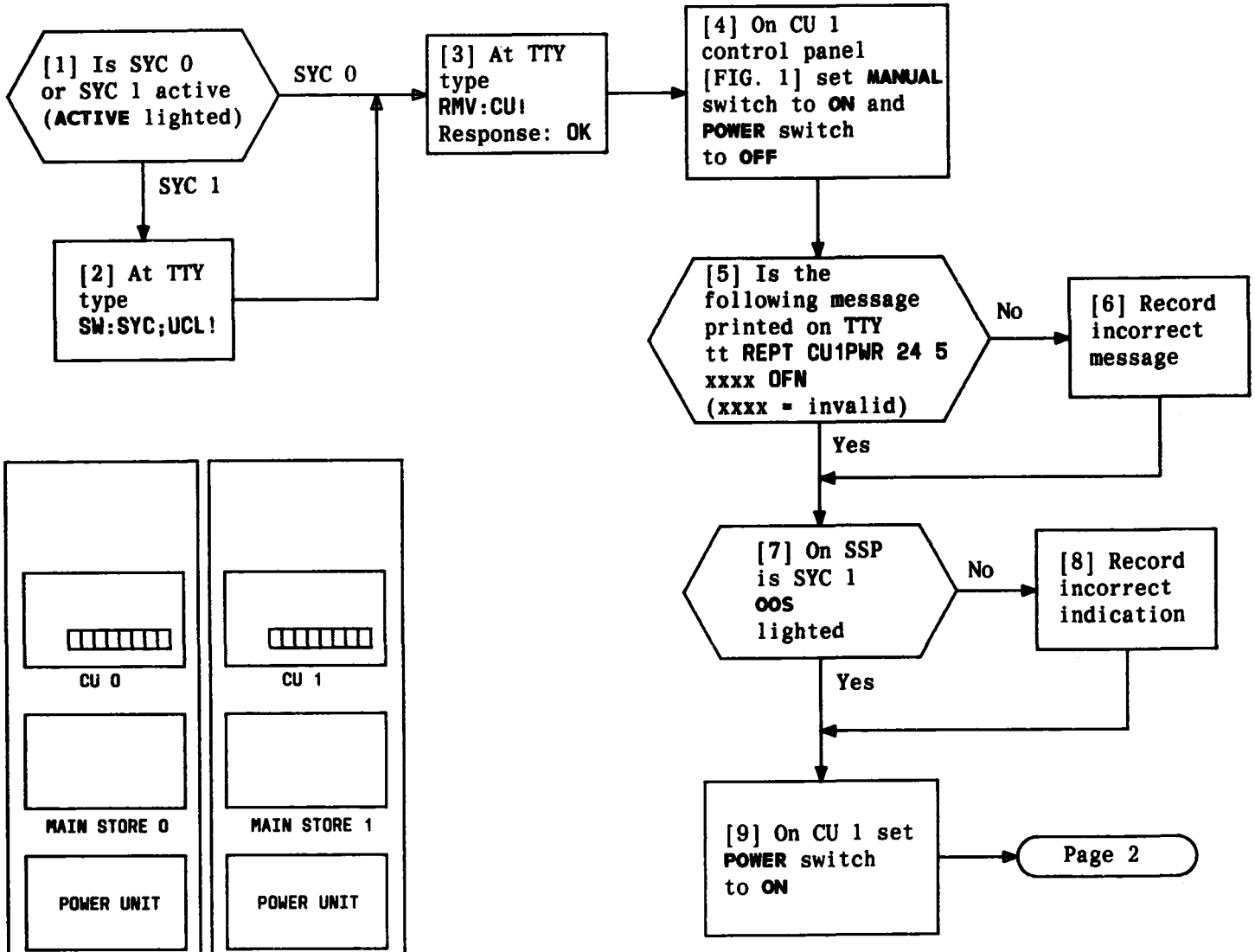

FIG. 1

TEST CONTROL UNIT 1 POWER ALARM

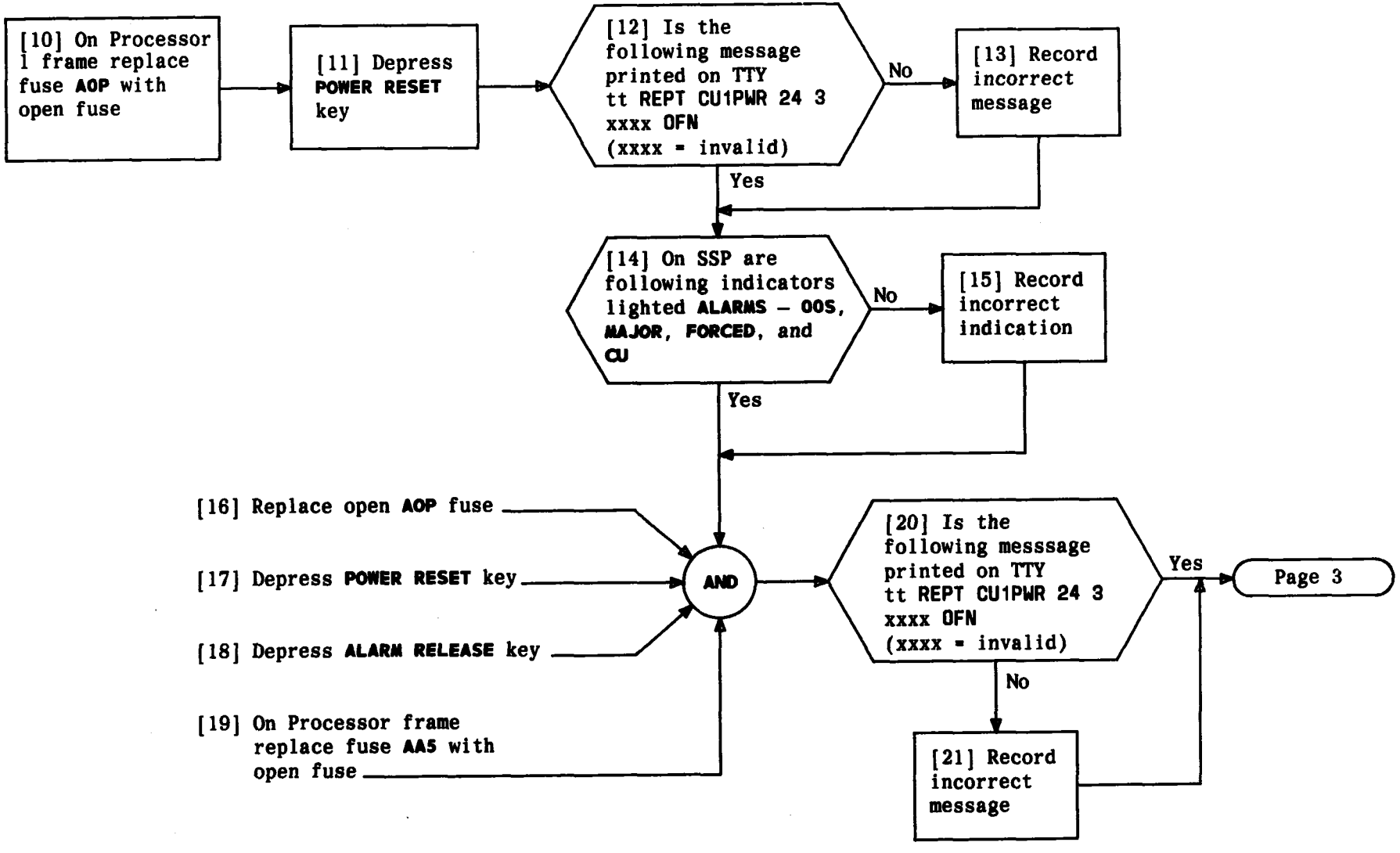

TEST CONTROL UNIT 1 POWER ALARM

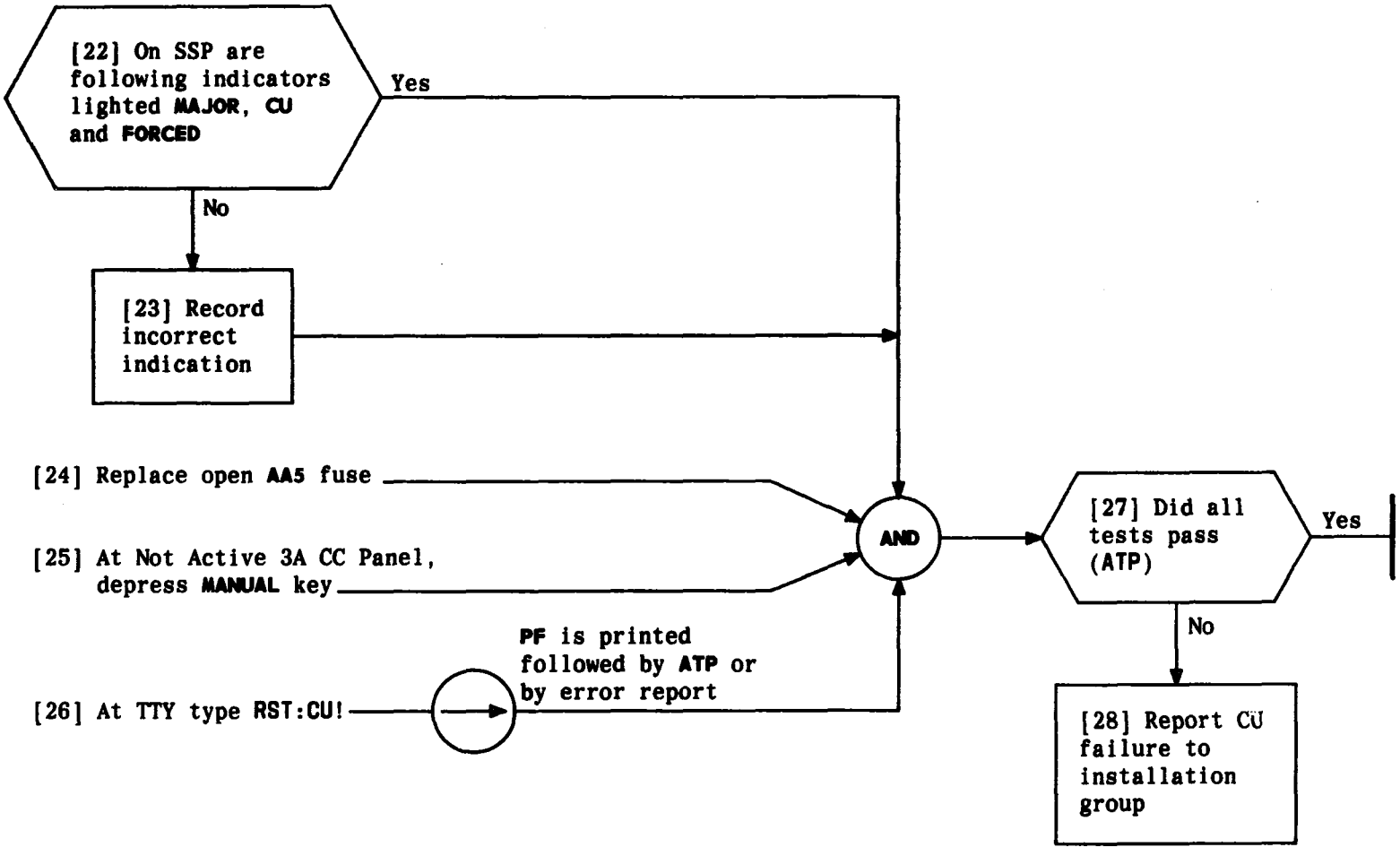

TEST CONTROL UNIT 1 POWER ALARM

[1] Type in the following:
INH:MSF 1!
INH:MSF 2!
INH:MSF 3!
INH:MSF 6!
INH:MSF 9!

[2] Wait for
OP DATA COMPL

SC lighted on SSP

[3] Type in
LOD:ST xxxxx;SGL:0!
[NOTE 1]

[4] Type in
RST:SC 0x;UCL!
[x is SYC not active]

[5] Type in
SW:SYC! several
times

AND

NOTE 1	
xxxxx is the address of first word of D1ROUC found in PR-3H011 - ATSD	
Issue 3	AUG 1984
233-142-100	DLP
PAGE 1 of 1	511

INHIBIT MAINTENANCE FUNCTIONS

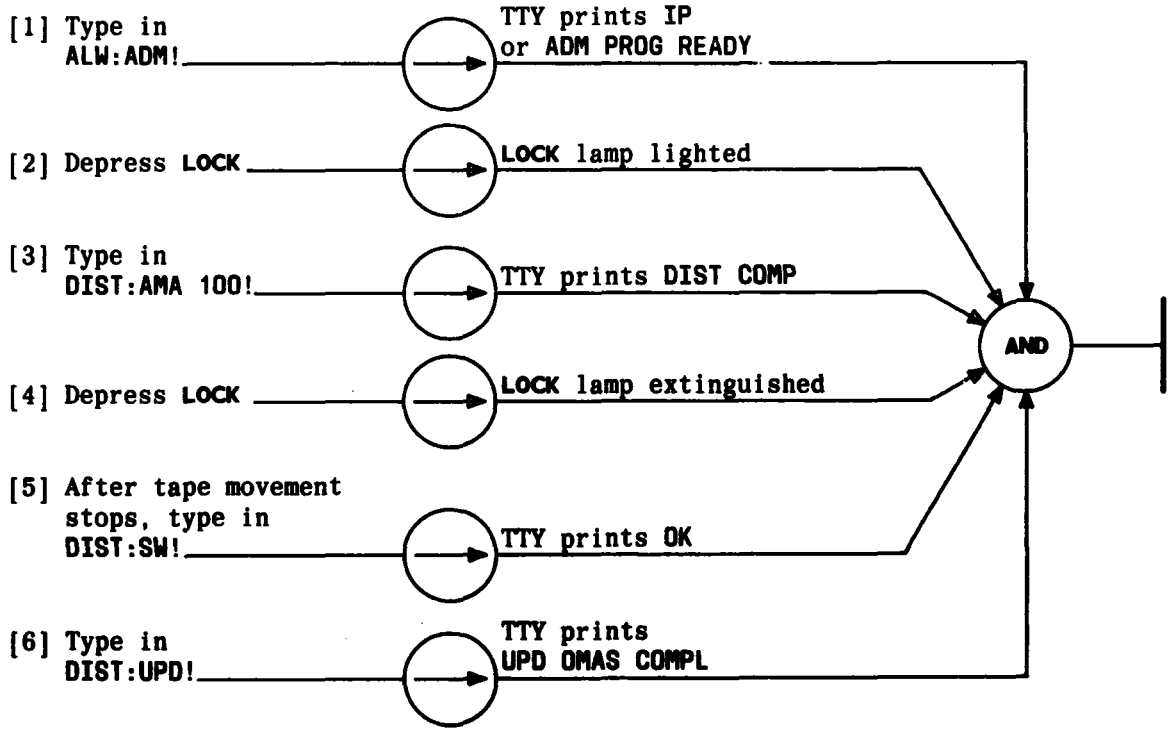

SET AMA BUFFER TO 100 WORDS

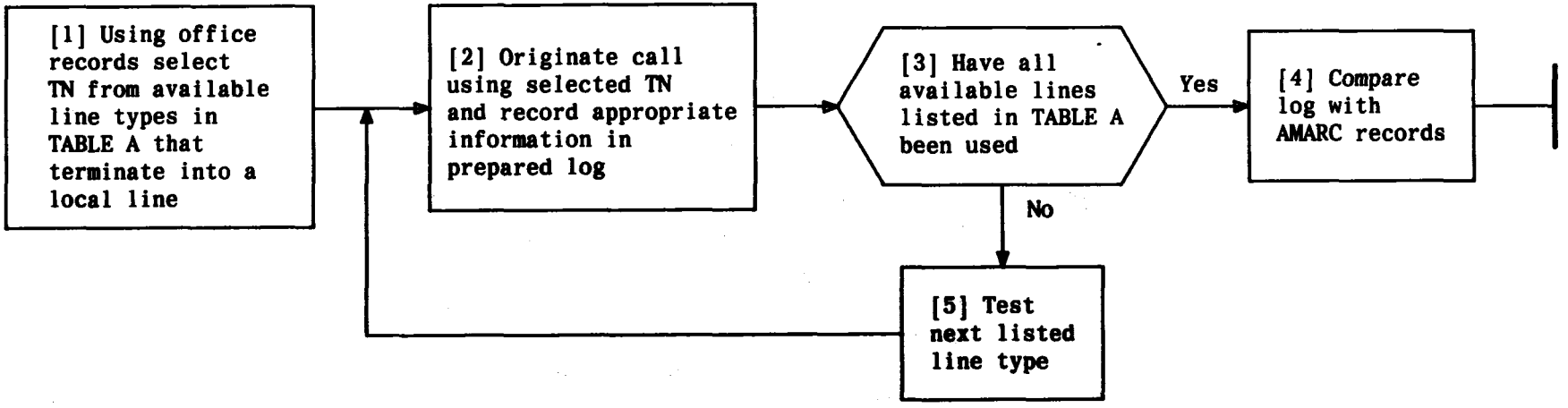

TABLE A
MISCELLANEOUS TEST CALL LINES

1. Private line
2. Private flat-rate line marked as subscriber line usage
3. Two-party line
4. Four-party line with one 10-second call (no record will be generated, unless the line is marked as subscriber line usage study)
5. Dial-tone-first coin line marked as traffic sampling
6. Coin-first coin line marked as traffic sampling
7. Three-way line
8. Call-waiting line
9. PBX line

TEST BILLING OF CALLS INTO LOCAL TEST LINE

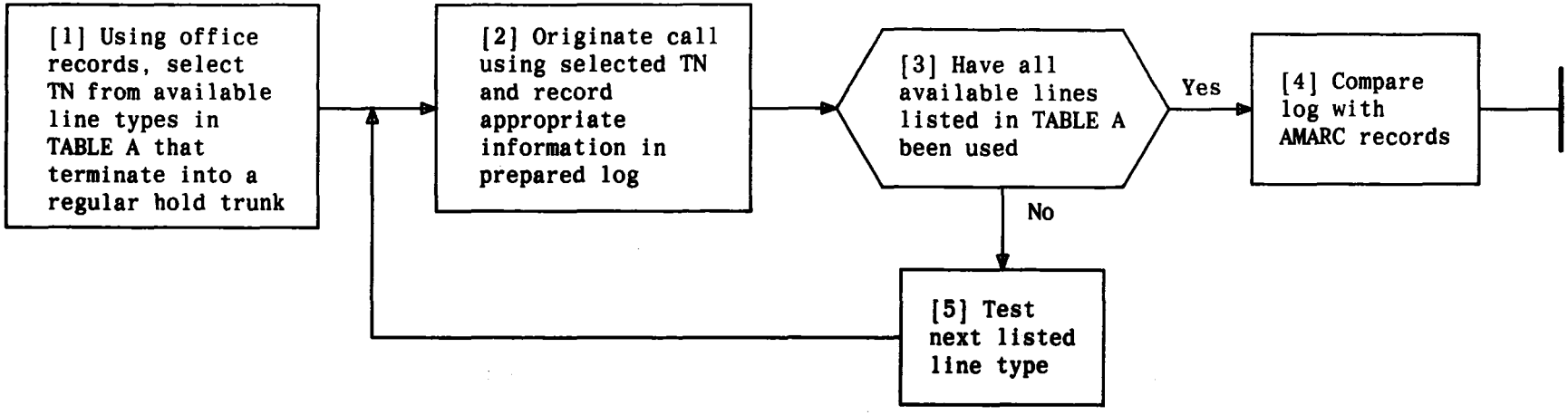

TABLE A
MISCELLANEOUS TEST CALL LINES

1. Private line
2. Private flat-rate line marked as subscriber line usage
3. Two-party line
4. Four-party line with one 10-second call (no record will be generated, unless the line is marked as subscriber line usage study)
5. Dial-tone-first coin line marked as traffic sampling
6. Coin-first coin line marked as traffic sampling
7. Three-way line
8. Call-waiting line
9. PBX line

TEST BILLING OF CALLS INTO REGULAR HOLD TRUNK LINE

[1] From private message-rate line place calls through all trunk groups

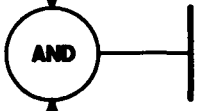

[2] Compare log with AMARC records. See NOTE 1

NOTE 1
With the exception of 411, 800 calls and calls marked as traffic sampling of subscriber line usage study, no records should be generated for TSPS, TSP, CAMA, or operator board calls

TEST BILLING OF CALLS FROM PRIVATE MESSAGE-RATE LINE THROUGH ALL TRUNK GROUPS

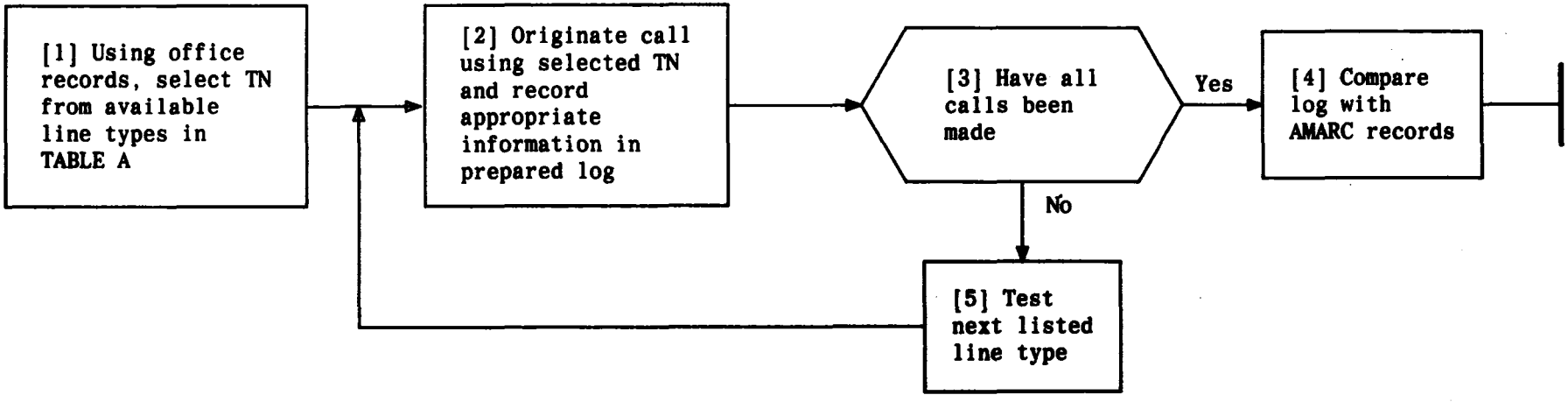

TABLE A
MISCELLANEOUS TEST CALL LINES

1. TLTP line to a trunk only
2. Incoming call to a call-forward line which forwards its phone to a local station
3. Regular tandem call with duration 10 seconds (no record will be generated, except when induced by the call-forward action)
4. WATS line to a trunk only

TEST BILLING OF MISCELLANEOUS CALLS

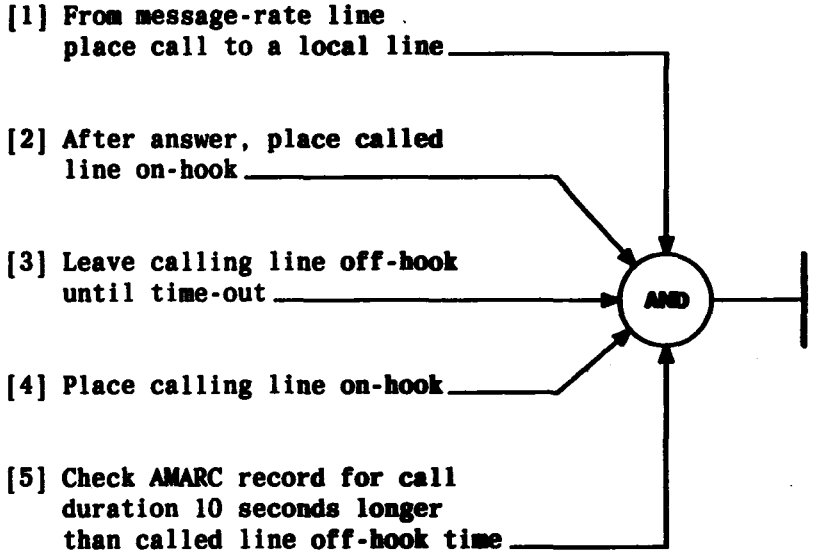

TEST TIME RELEASE DISCONNECT BILLING

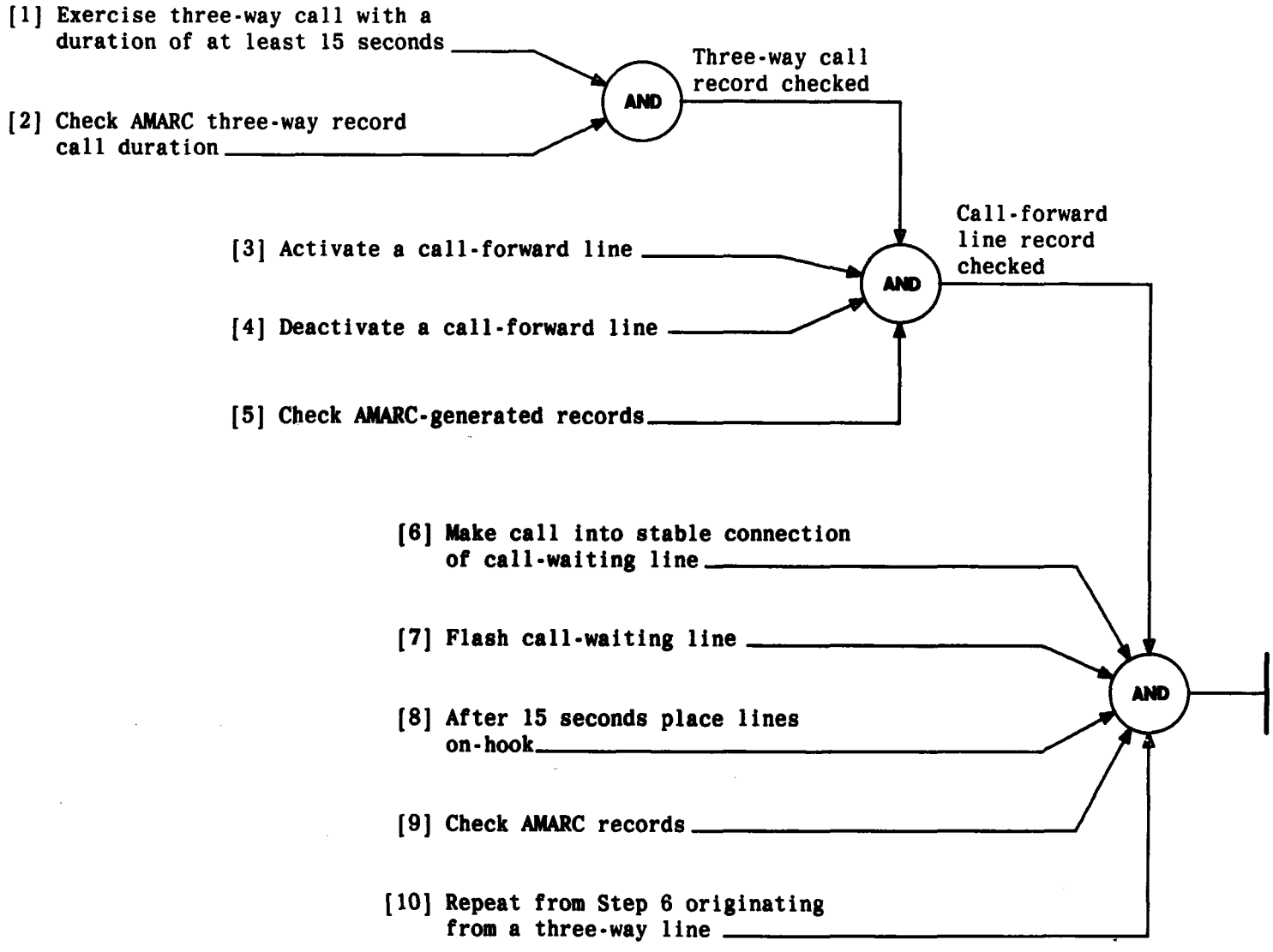

TEST CUSTOM CALLING FEATURES BILLING

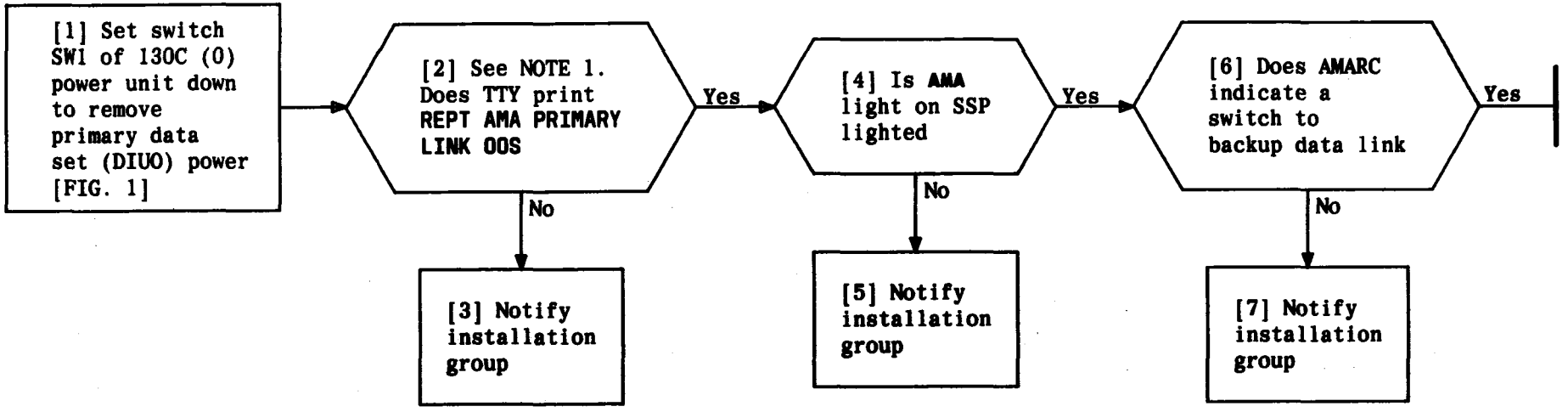

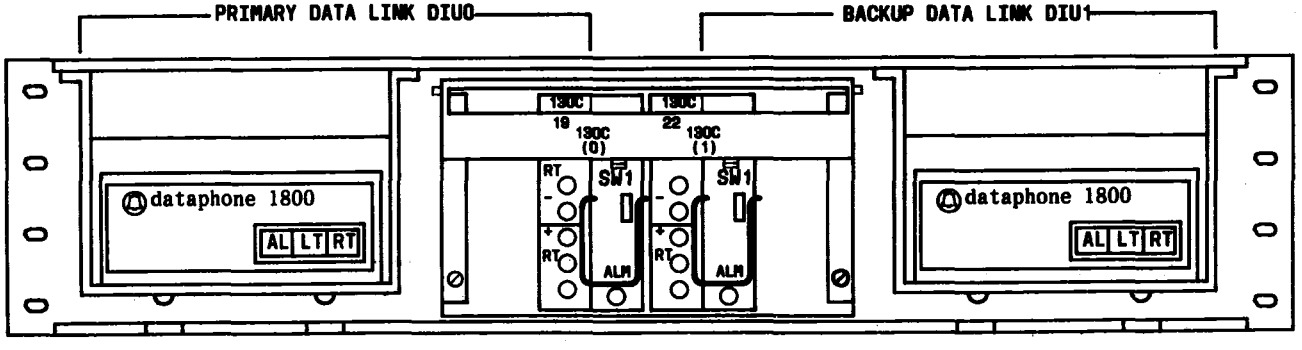

FIG. 1

NOTE 1

TTY may print
REPT CKT TRBL AMA

Issue 3	AUG 1984
233-142-100	DLP
PAGE 1 of 1	519

TEST SWITCH TO BACKUP DATA LINK

[1] Set switch SW1 of 130C(0) power unit up to restore power to primary data set

[2] Set switch SW1 of 130C(1) power unit down to remove power from backup data set [FIG. 1]

AND

[3] Within 25 seconds does TTY print REPT AMA BACKUP LINK OOS REPT AMA MULTIPLE LINK OOS and AMA extinguish

No

[4] Notify installation group

Yes

[5] Does AMARC report a switch to primary link

Yes

[7] Set switch SW1 of 130C (1) power unit up to restore power to backup data set

No

[6] Notify installation group

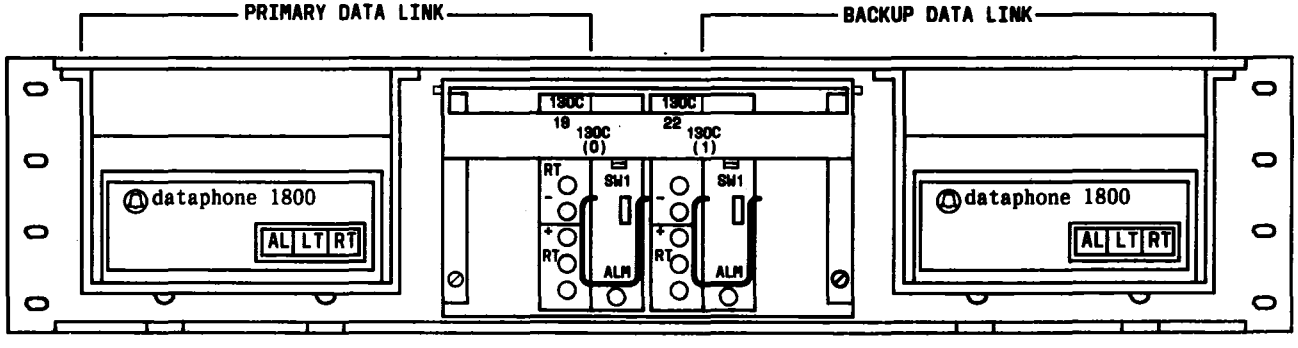

FIG. 1 – Data Interface Unit

Issue 3	AUG 1984
233-142-100	DLP
PAGE 1 of 1	520

TEST SWITCH TO PRIMARY DATA LINK

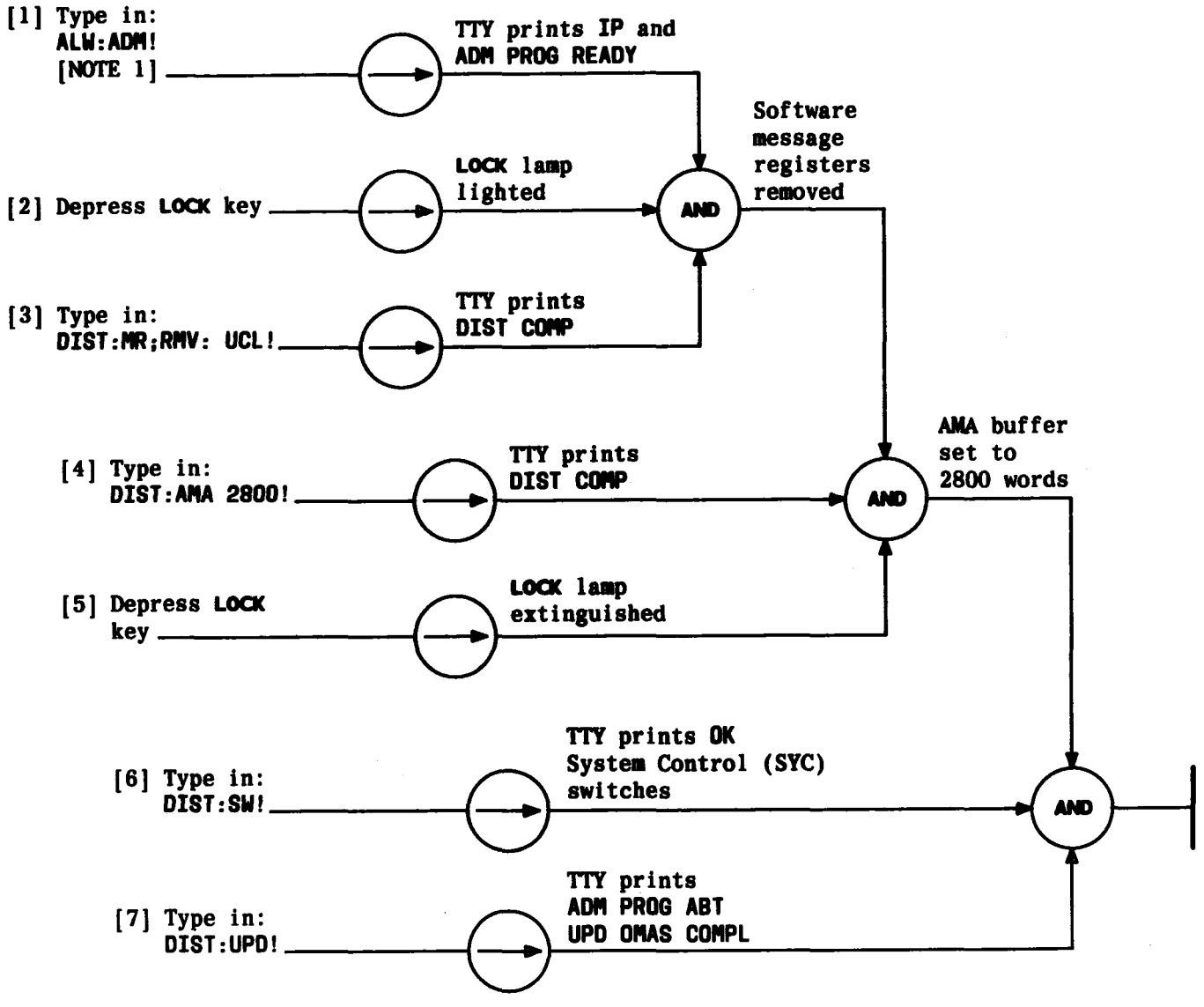

NOTE 1
Message holds administration MSF active for 5 minutes

Issue 3	AUG 1984
233-142-100	DLP
PAGE 1 of 1	521

RECONFIGURE SOFTWARE MESSAGE AREA

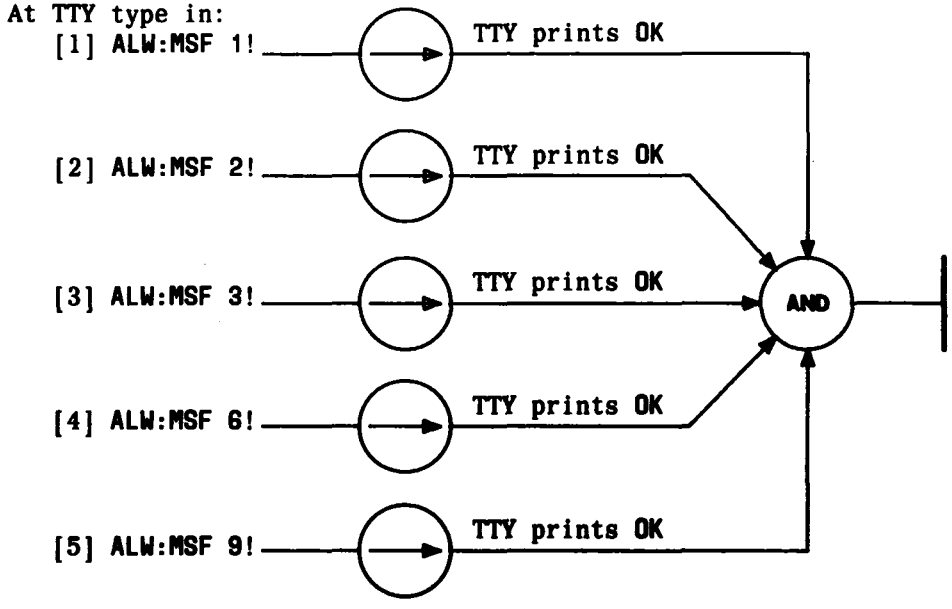

ALLOW MAINTENANCE FUNCTIONS

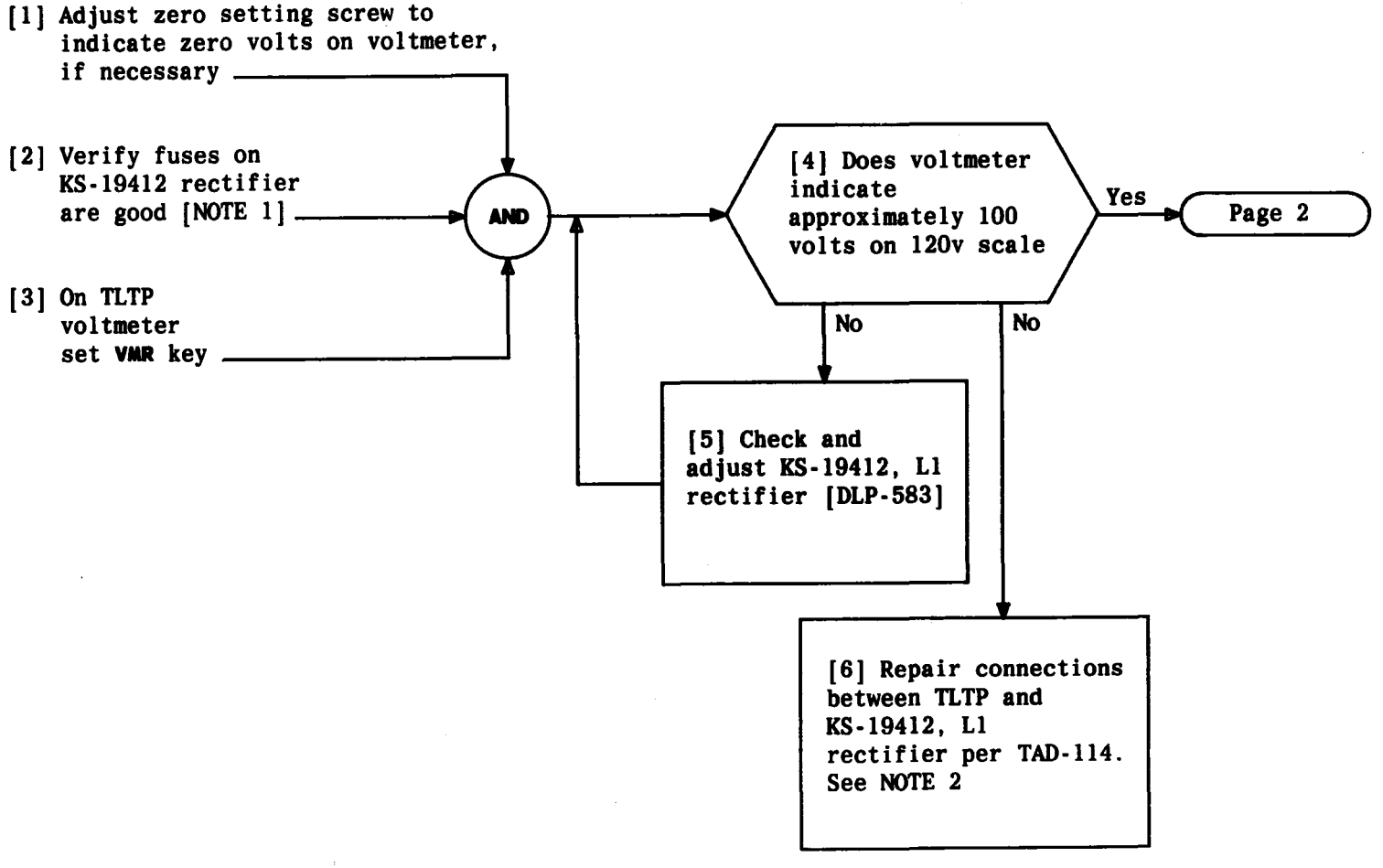

NOTES

1. Fuses F2-F7 are .25A (Type 70K), F8-F16 are .75A (Type 70K)
2. When used for acceptance, refer troubles to installation group

Issue 3	AUG 1984
233-142-100	DLP
PAGE 1 of 2	523

CHECK TRUNK AND LINE TEST PANEL TEST VOLTAGES

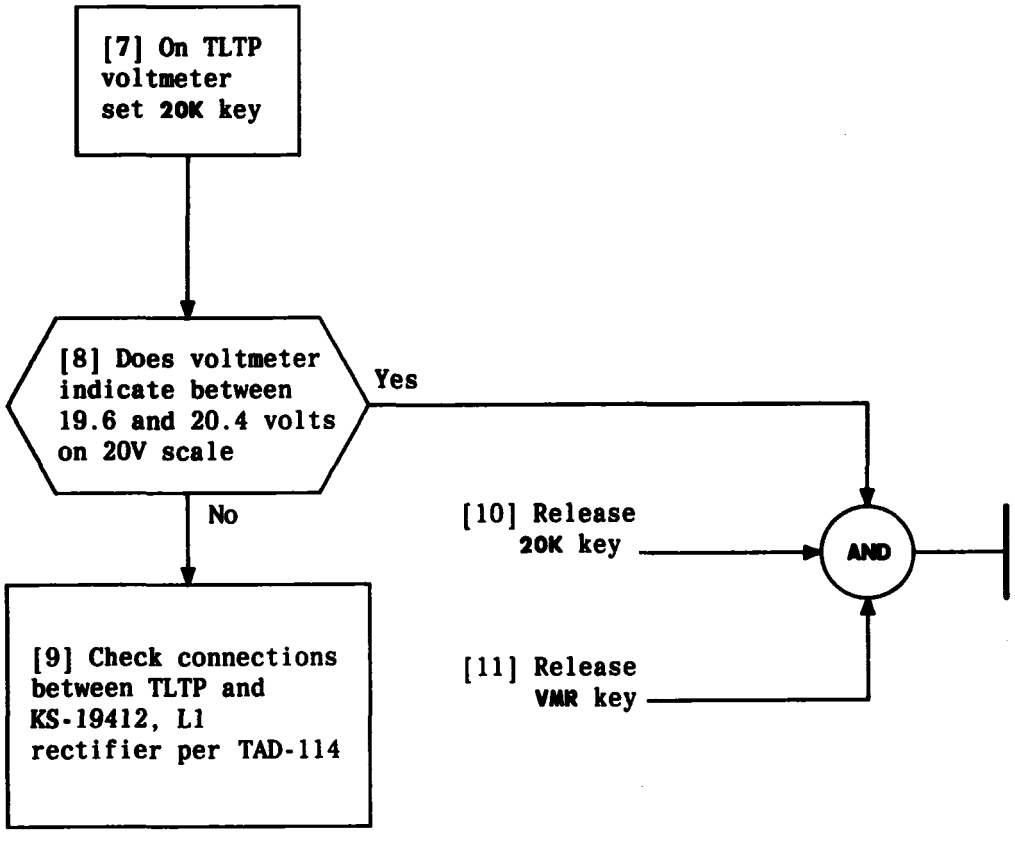

CHECK TRUNK AND LINE TEST PANEL TEST VOLTAGES

[1] At front of network frame (gg) identified by service order, locate 15A grid for concentrator (c) and switch group (w) [FIG.1]

[2] On 296-6C switches, locate line sensor coil for switch (s) and level (i) identified by service order [FIG. 2]

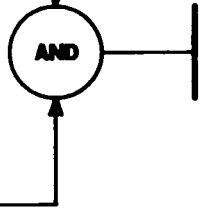

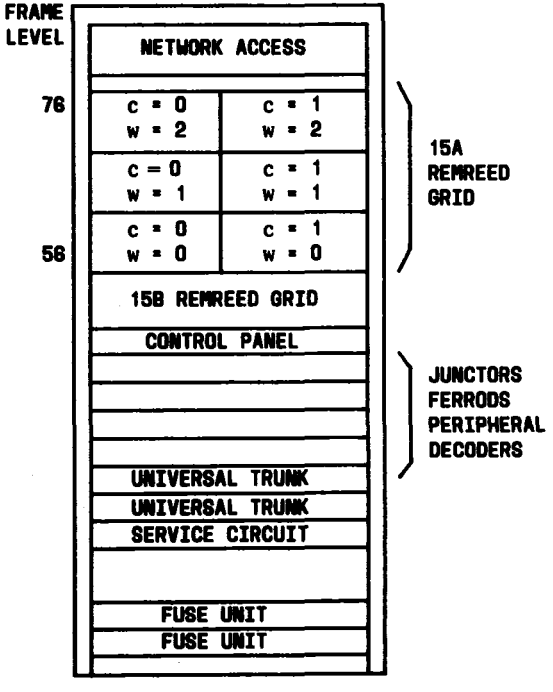

FIG. 1 – Location of 15A Remreed Grid on Network Frame

LOCATE LINE SENSOR COIL

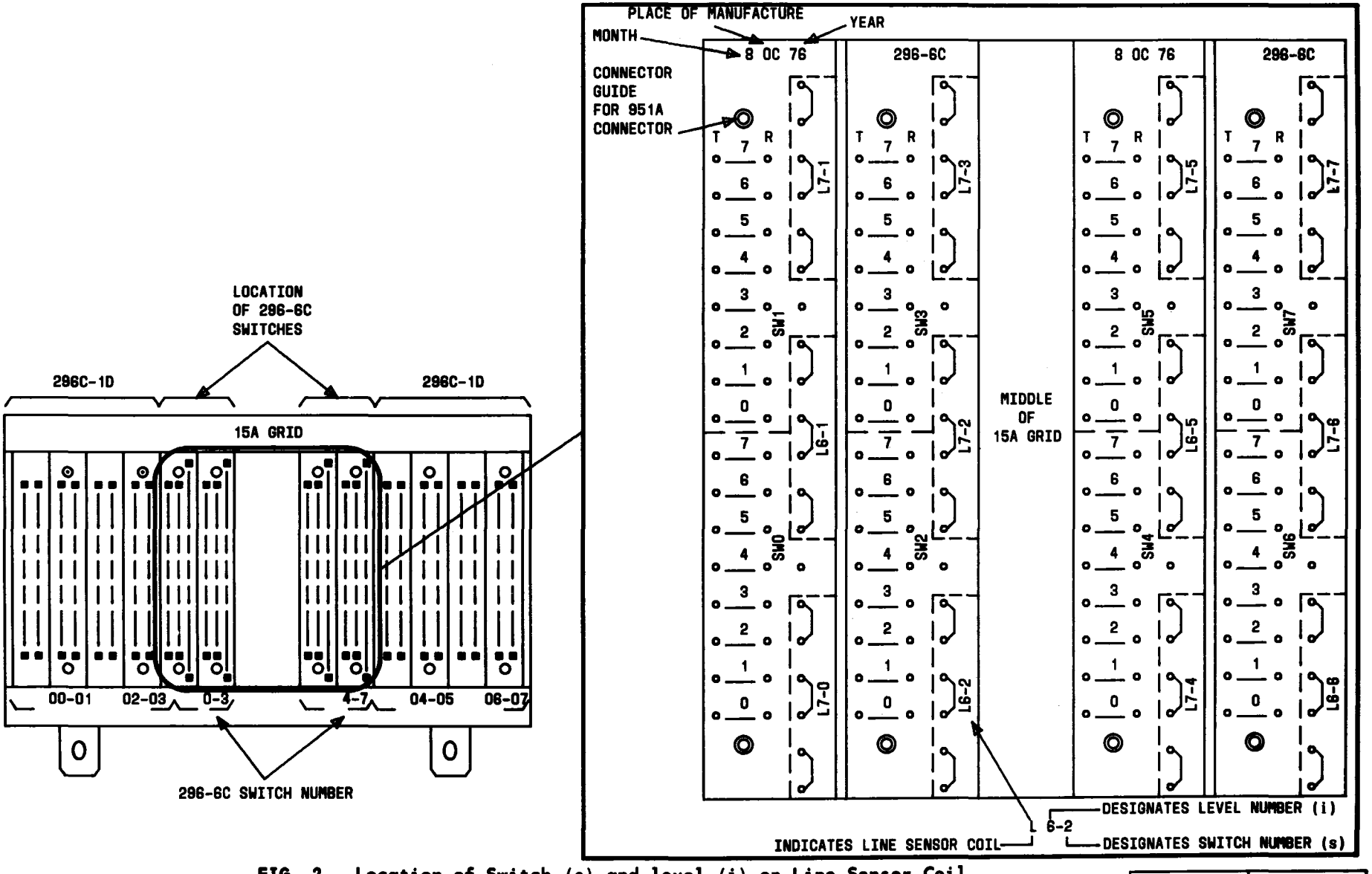

FIG. 2 - Location of Switch (s) and level (i) on Line Sensor Coil

LOCATE LINE SENSOR COIL

CHECK AND RESET SYSTEM CLOCK

[1] Call Standard Time number

[2] While connection is being established, on MC TTY type OP:CLK!

[3] Compare Standard Time, present day of week, and date with TTY printout

AND

[4] Does Standard Time, day of week, and date agree with TTY printout

Yes

No

[5] Is time of day the only incorrect parameter

Yes

No

[8] Set clock ahead by adding 2 minutes to Standard Time

AND

Page 2

[9] See NOTE 1. Type Form 1 of set clock message per TABLE A

[6] Set clock ahead by adding approximately 3 minutes to Standard Time

AND

Page 2

[7] See NOTE 1. Type Form 2 of set clock message per TABLE A

TABLE A
SET CLOCK MESSAGE

Form 1	SET:CLK:TIME(hh,mi,ss)
Form 2	SET:CLK:TIME(hh,mi,ss),day(mo,dd,yy)
VARIABLES	hh = Hour of day (00-23) mi = Minutes past the hour (00-59) ss = Seconds past the minute (00-59) day = Day of week (SUN, MON, TUE, WED, THURS, FRI, SAT) mo = Month of year (Jan is 01, Dec is 12) dd = Day of month (01-31) yy = Year (00-99)

NOTE 1
Observe that message does not include an execute instruction (!). The execute instruction will be typed later when the time entered in the input message becomes correct

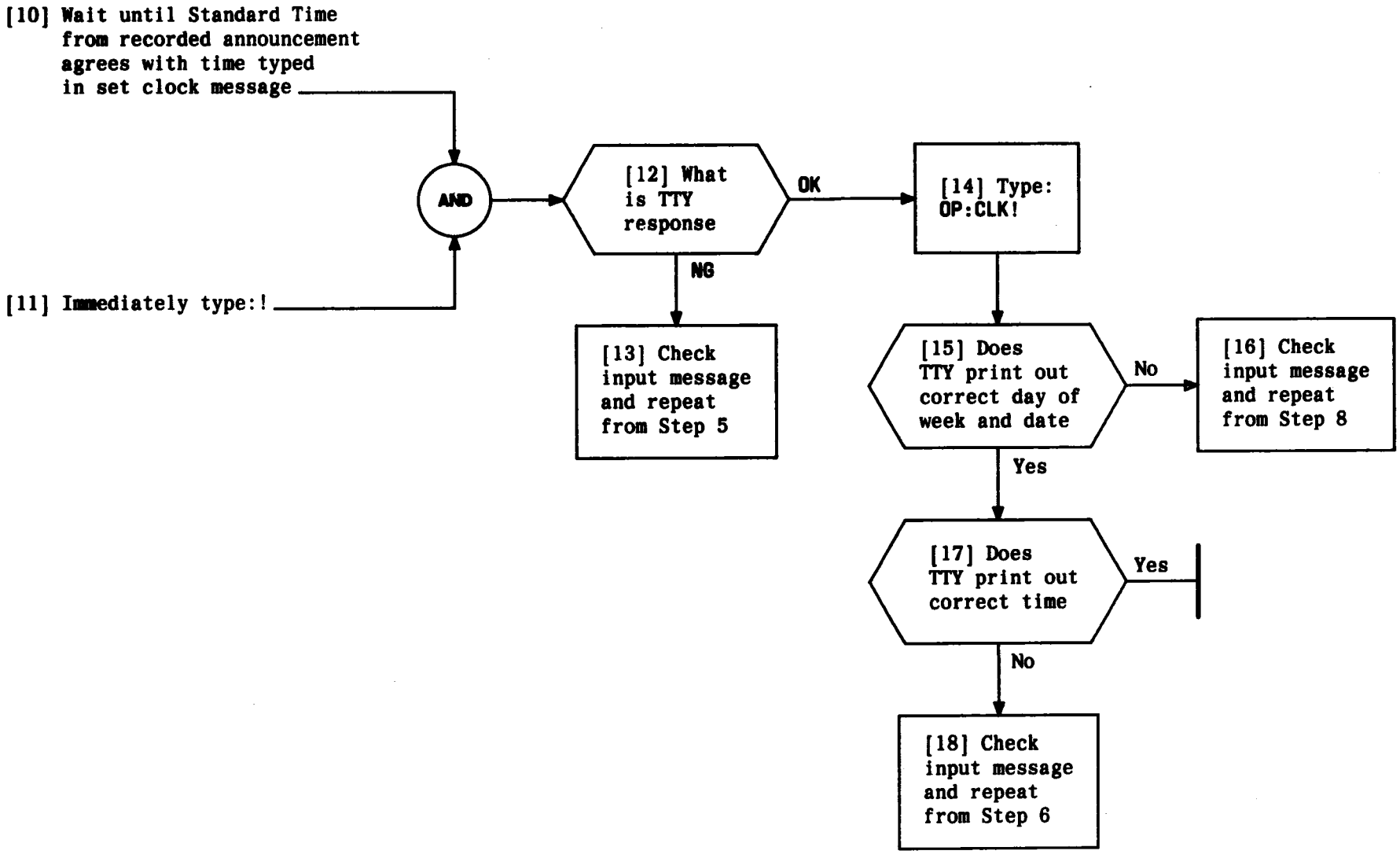

CHECK AND RESET SYSTEM CLOCK

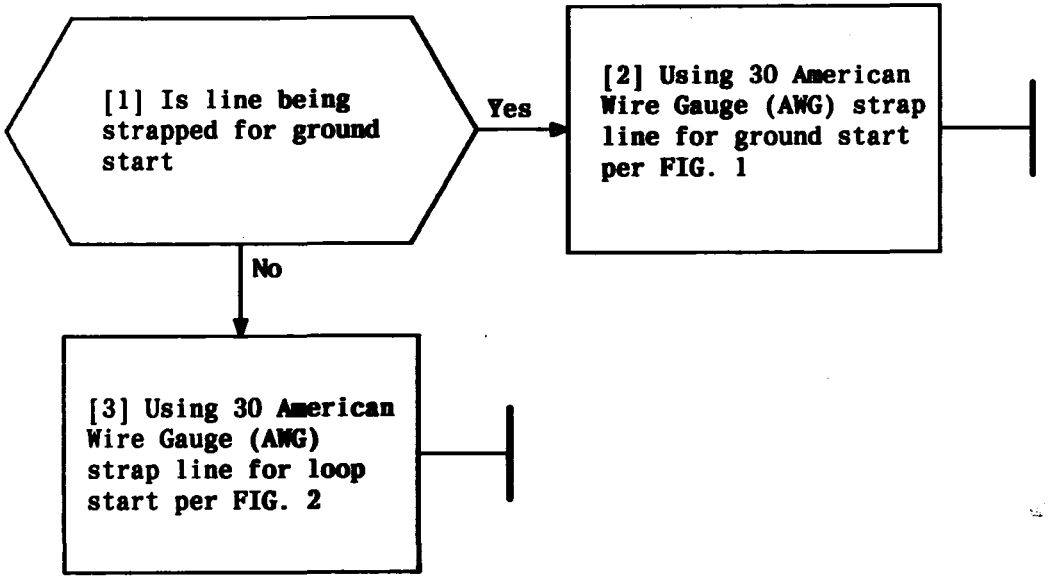

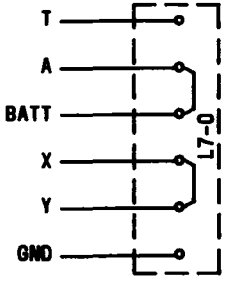

FIG. 1 – Terminals Strapped On Line Sensor Coil For Ground Start

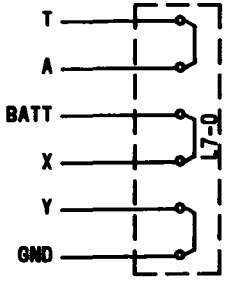

FIG. 2 – Terminals Strapped On Line Sensor Coil For Loop Start

INSTALL STRAPS ON LINE SENSOR COIL

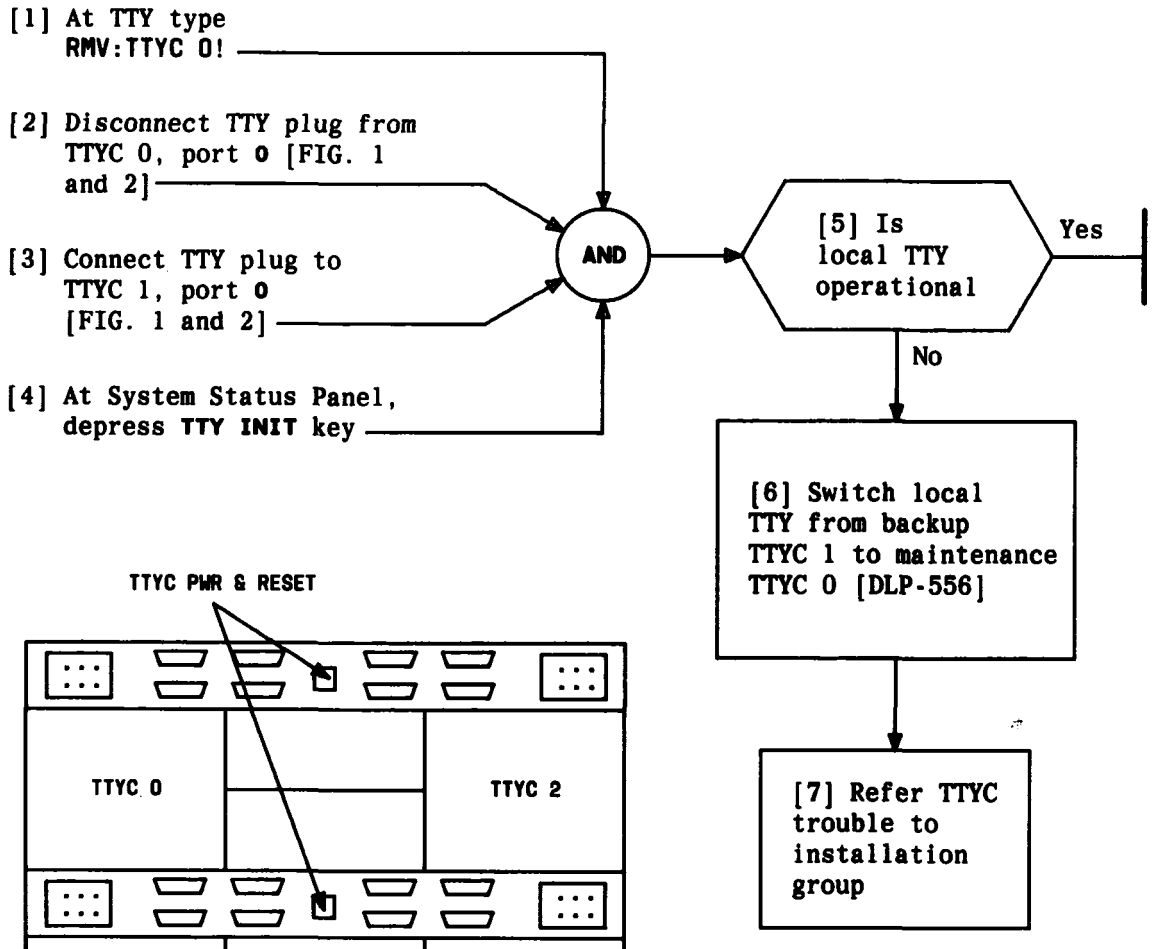

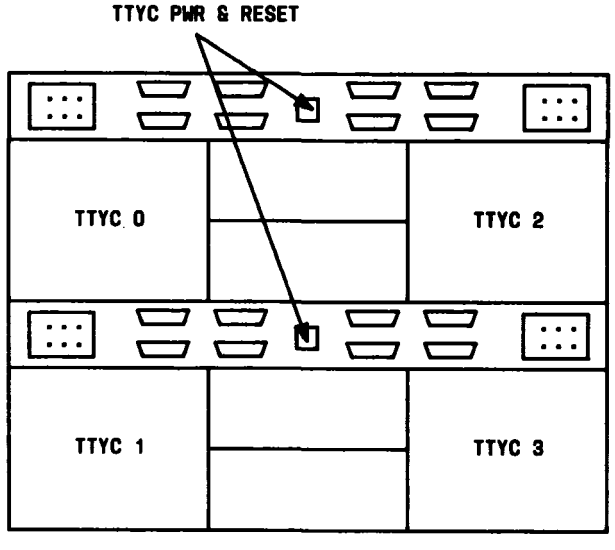

FIG. 1 – Typical TTYC Layout

SWITCH LOCAL TELETYPEWRITER FROM MAINTENANCE TTY CONTROLLER (TTYC 0) TO BACKUP TTY CONTROLLER (TTYC 1) FOR 43A-TYPE TTY

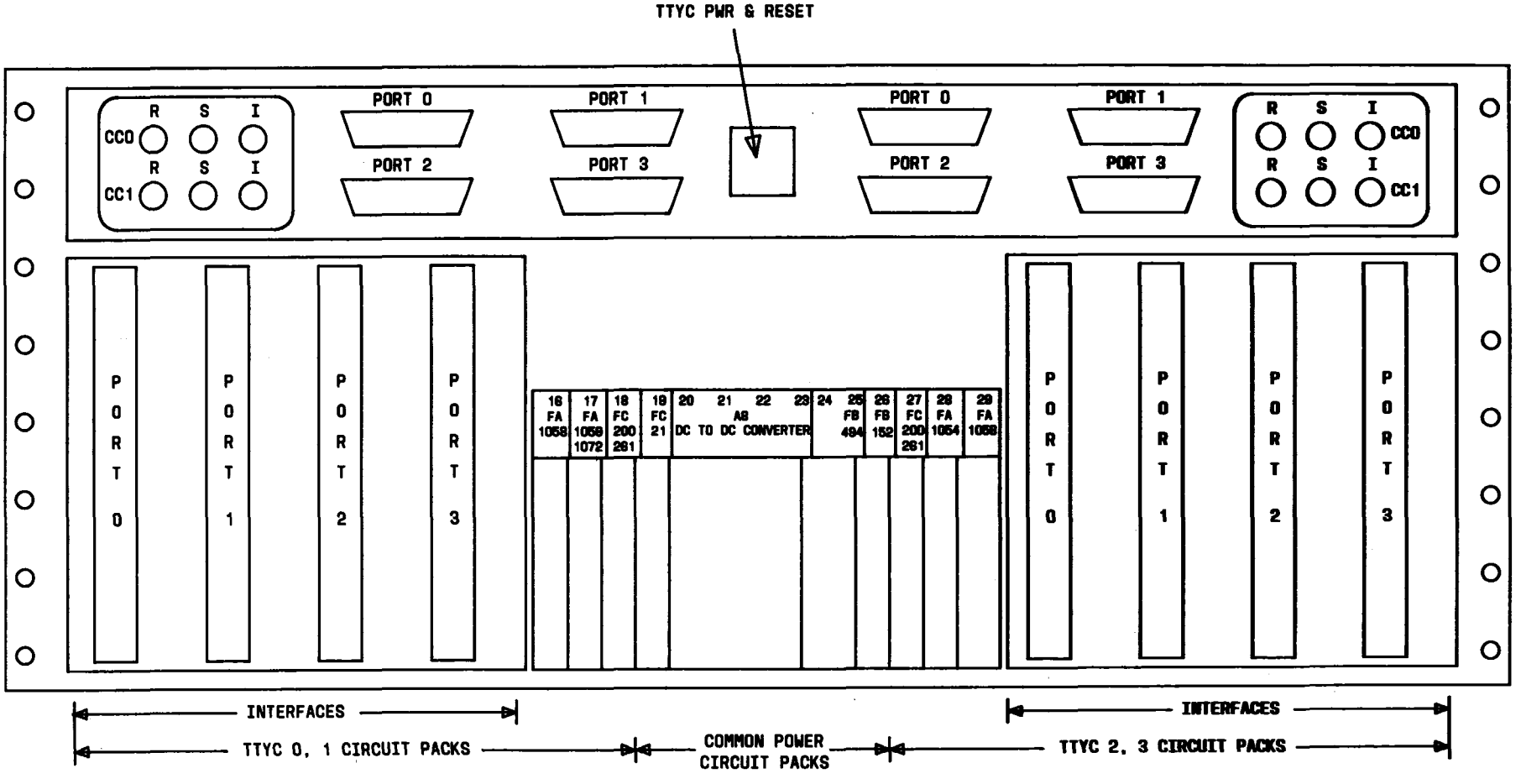

FIG. 2

SWITCH LOCAL TELETYPEWRITER FROM MAINTENANCE TTY CONTROLLER (TTY 0) TO BACKUP TTY CONTROLLER (TTYC 1) FOR 43A-TYPE TTY

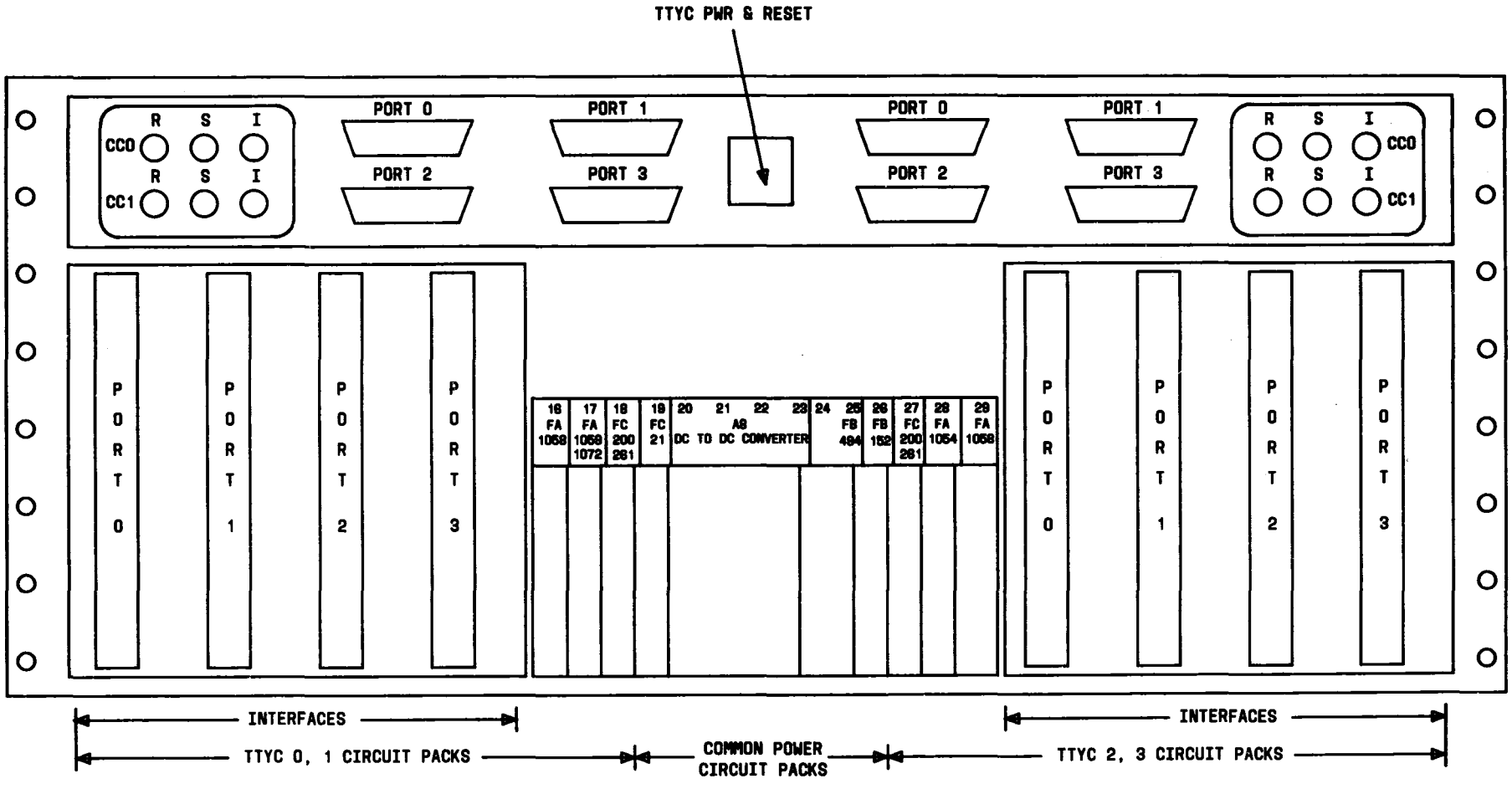

FIG. 1

SWITCH LOCAL TELETYPEWRITER FROM BACKUP TTY CONTROLLER (TTYC 1) TO MAINTENANCE TTY (MC) CONTROLLER (TTYC 0)

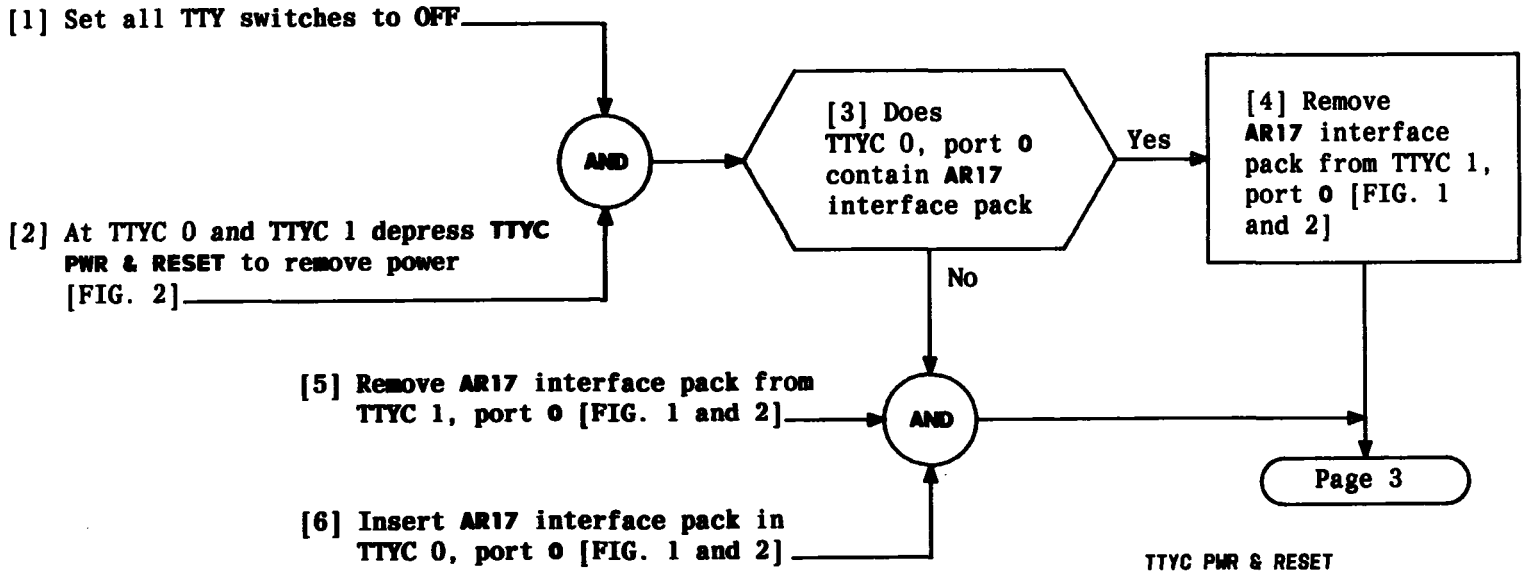

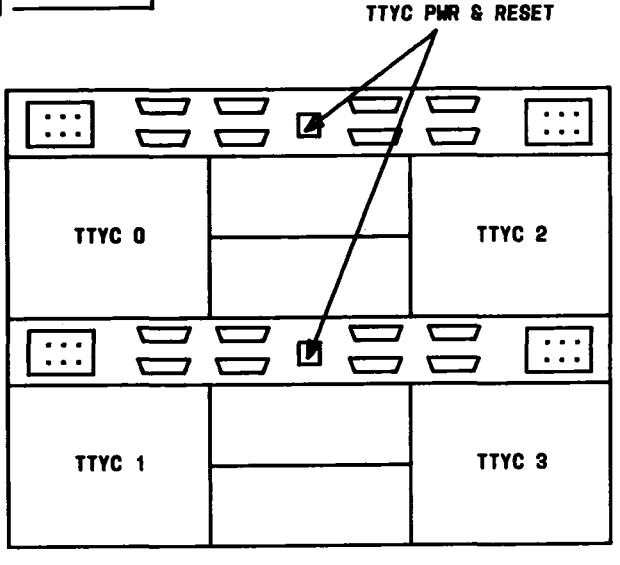

FIG. 2

SWITCH LOCAL TELETYPEWRITER FROM BACKUP TTY CONTROLLER (TTYC 1) TO MAINTENANCE TTY (MC) CONTROLLER (TTYC 0)

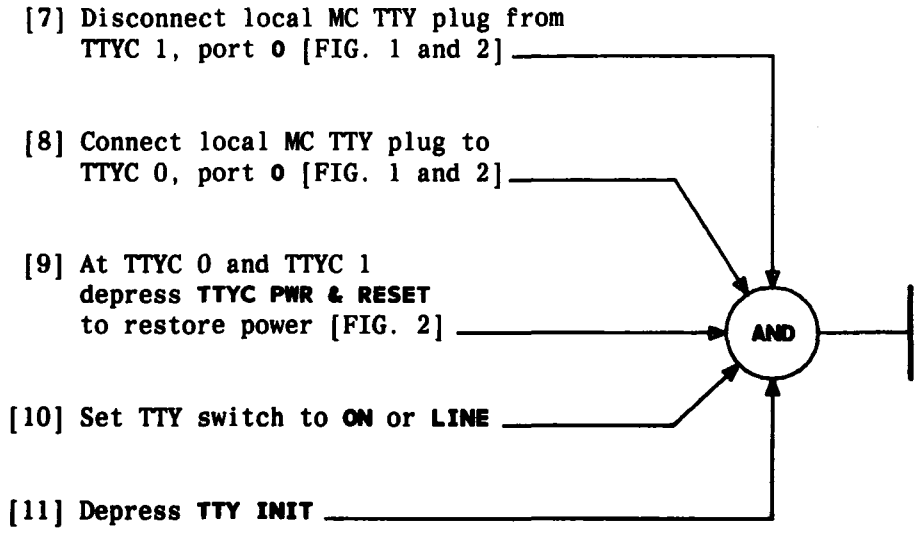

SWITCH LOCAL TELETYPEWRITER FROM BACKUP TTY CONTROLLER (TTYC 1) TO MAINTENANCE TTY (MC) CONTROLLER (TTYC 0)

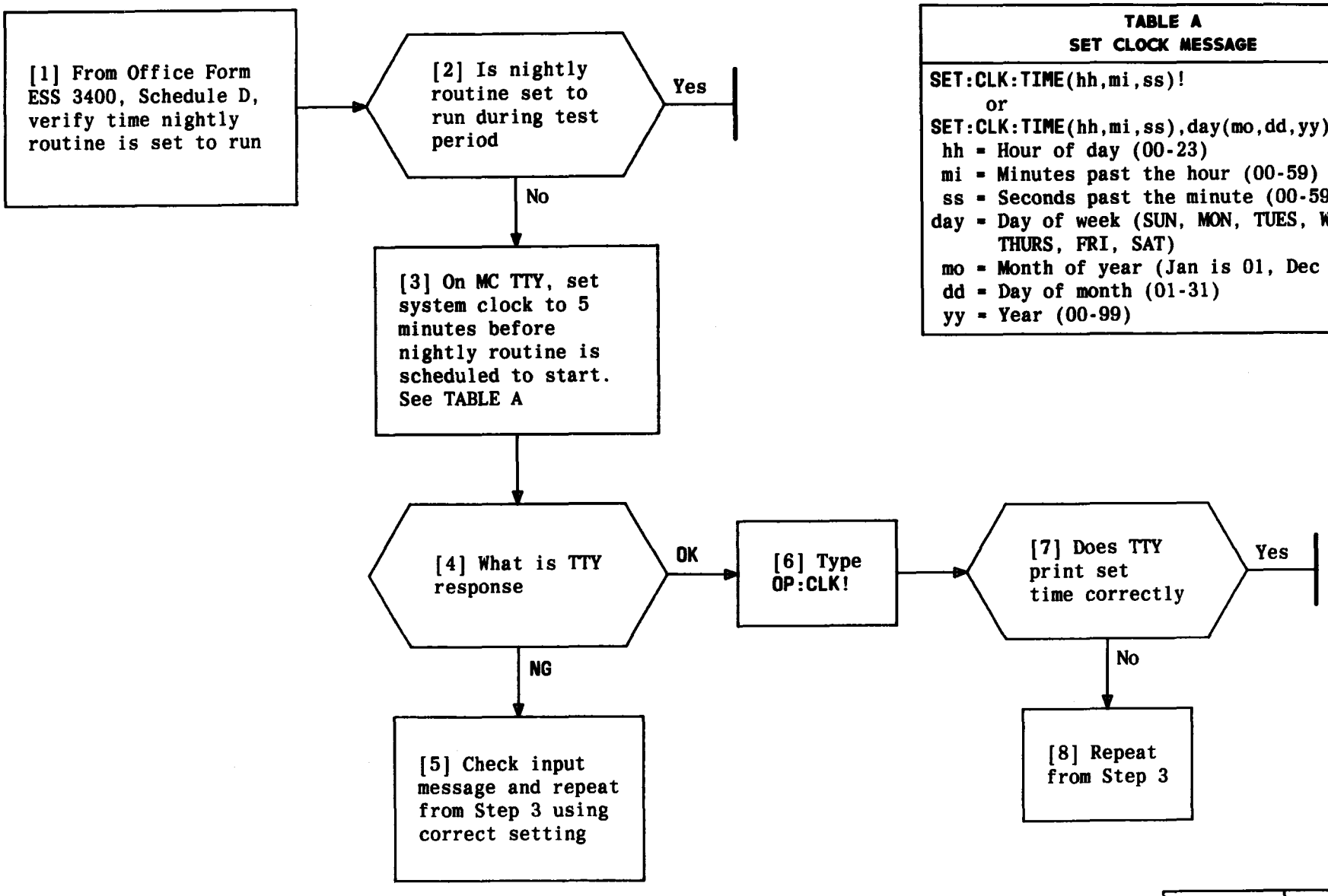

TABLE A
SET CLOCK MESSAGE

SET:CLK:TIME(hh,mi,ss)!
or
SET:CLK:TIME(hh,mi,ss),day(mo,dd,yy)!

hh = Hour of day (00-23)
mi = Minutes past the hour (00-59)
ss = Seconds past the minute (00-59)
day = Day of week (SUN, MON, TUES, WED, THURS, FRI, SAT)
mo = Month of year (Jan is 01, Dec is 12)
dd = Day of month (01-31)
yy = Year (00-99)

FORCE NIGHTLY ROUTINE TO RUN DURING TEST PERIOD

At SSP:

[1] Depress **LOCK**

[2] Depress **ENABLE**

[3] Depress **STABLE CALLS**

[4] Depress **MEMORY RELOAD**

[5] Depress **INIT EXECUTE**

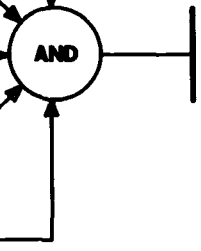

PERFORM A MEMORY RELOAD INITIALIZATION

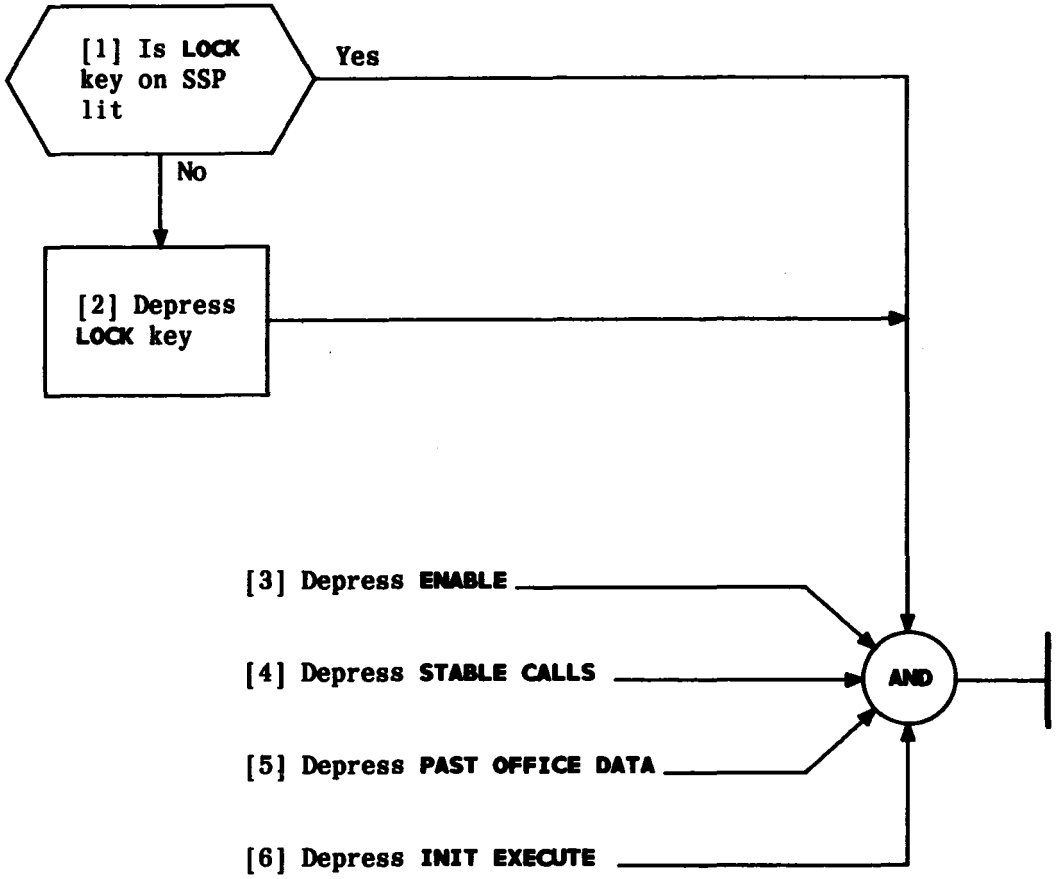

PERFORM A PAST OFFICE INITIALIZATION

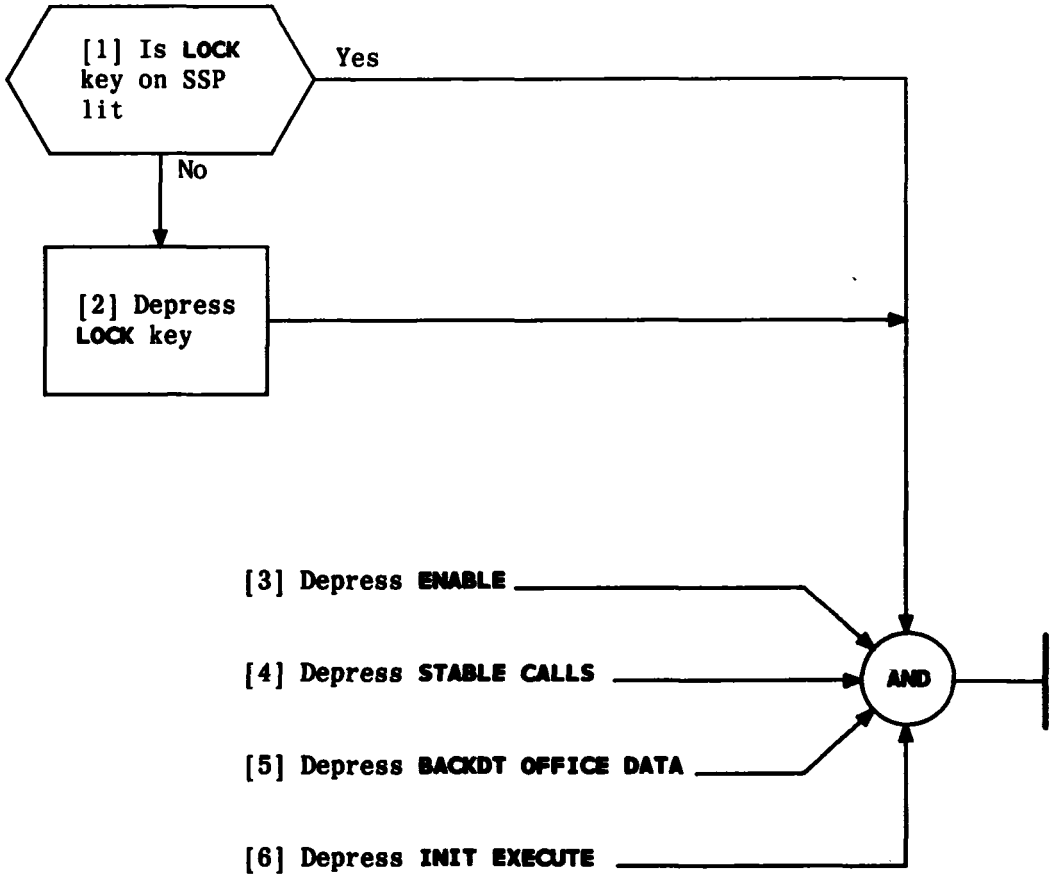

PERFORM A BACKDATE OFFICE INITIALIZATION

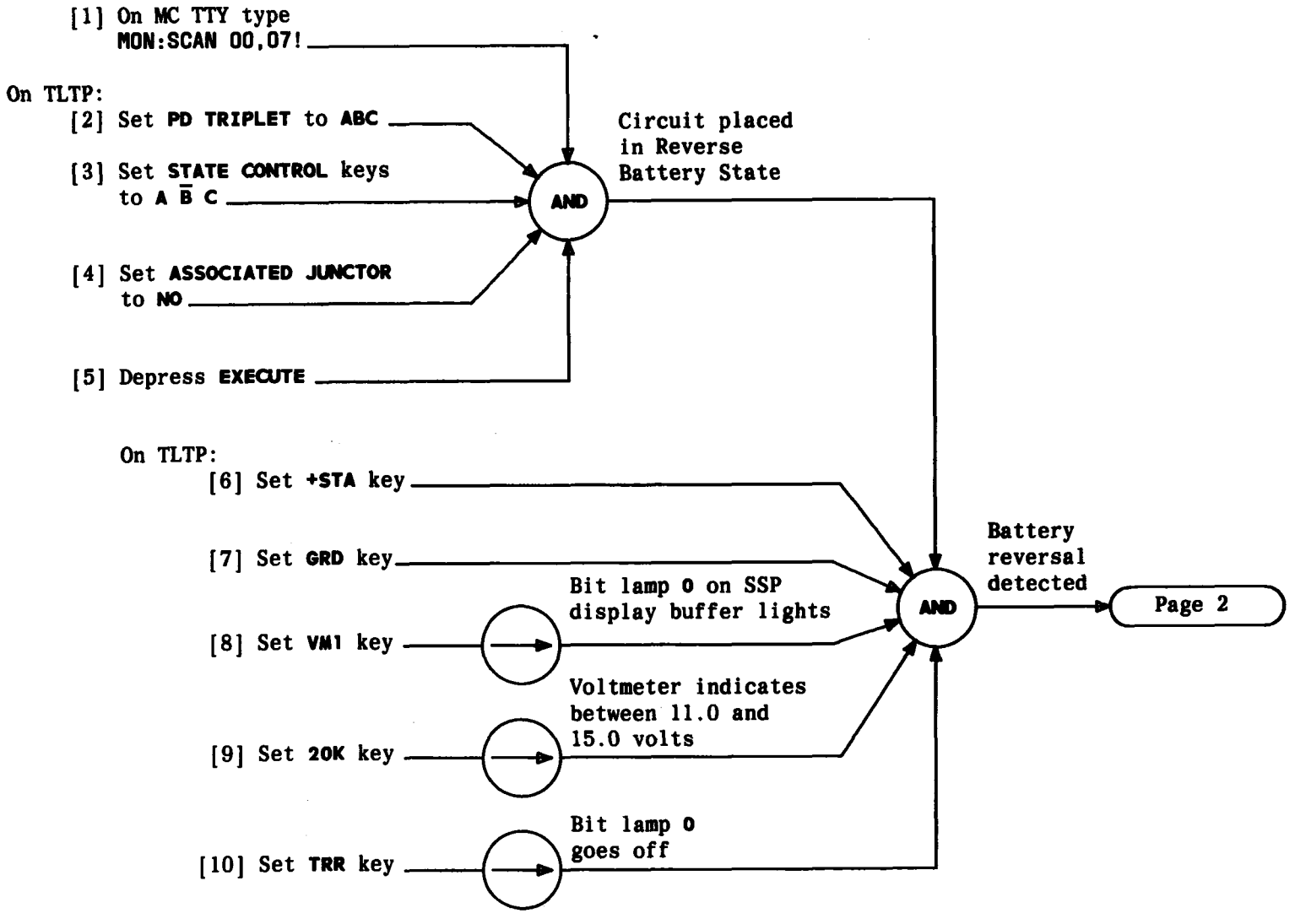

TEST OPERATION OF DIAL PULSE RECEIVER TEST CIRCUIT

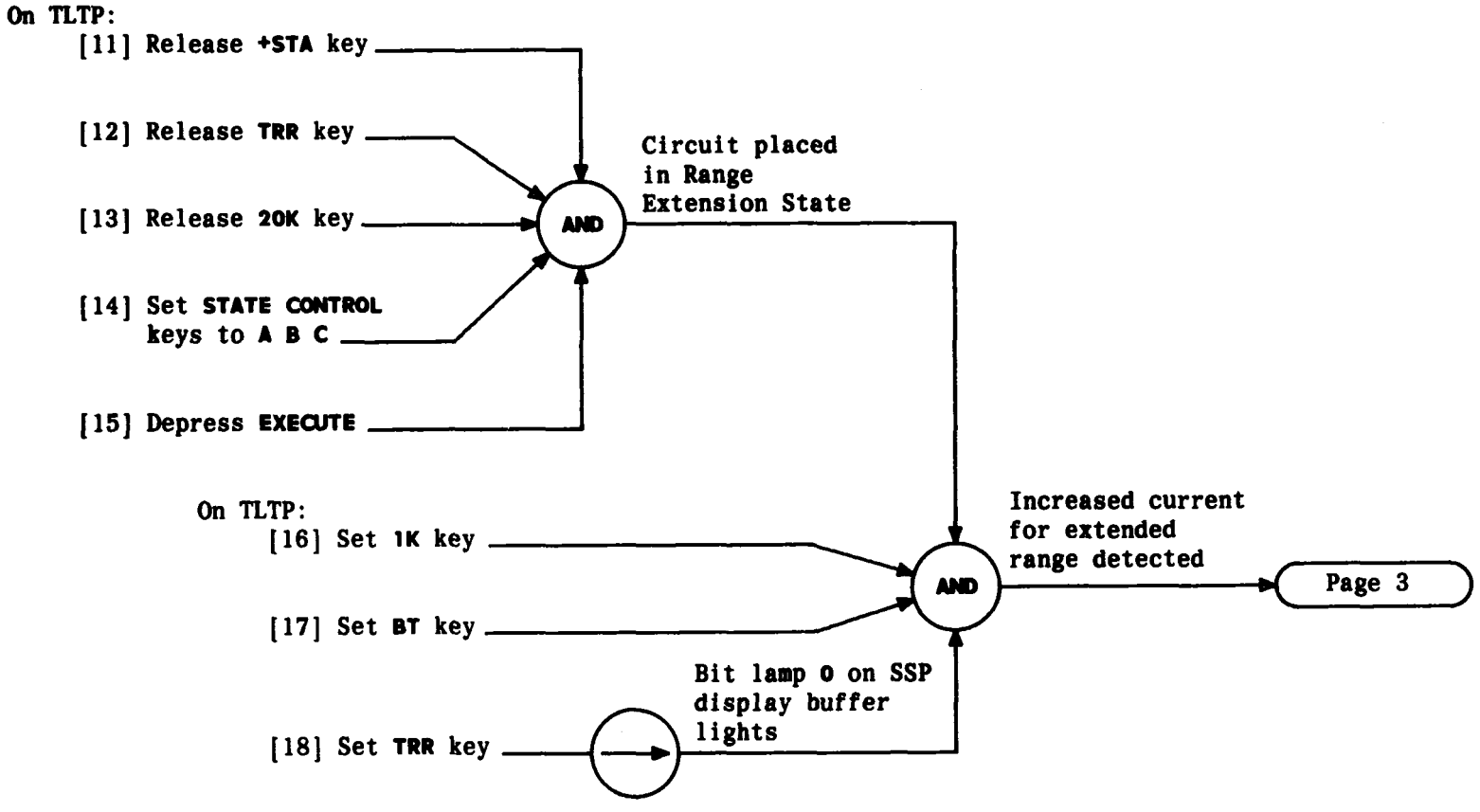

TEST OPERATION OF DIAL PULSE RECEIVER TEST CIRCUIT

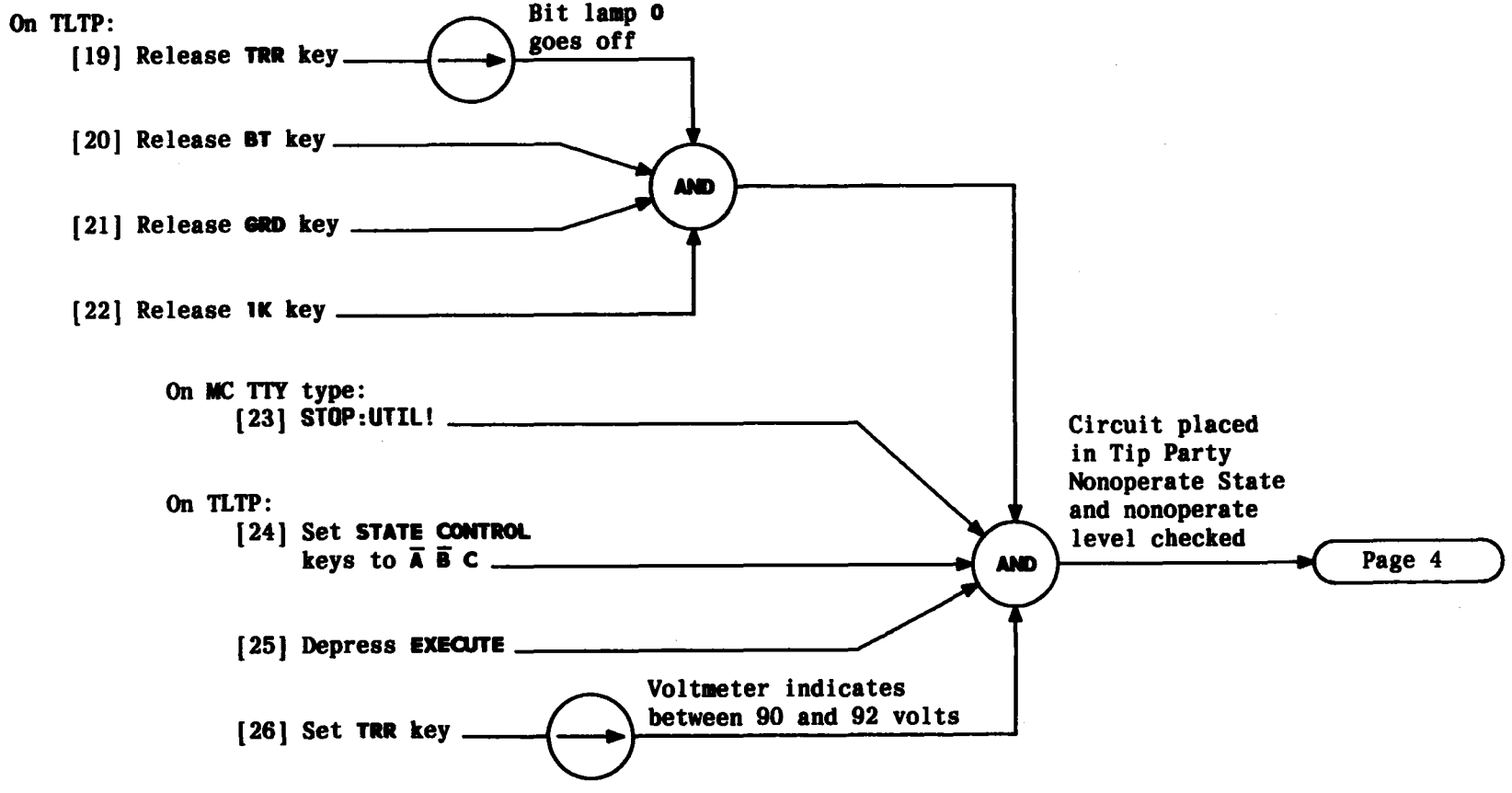

TEST OPERATION OF DIAL PULSE RECEIVER TEST CIRCUIT

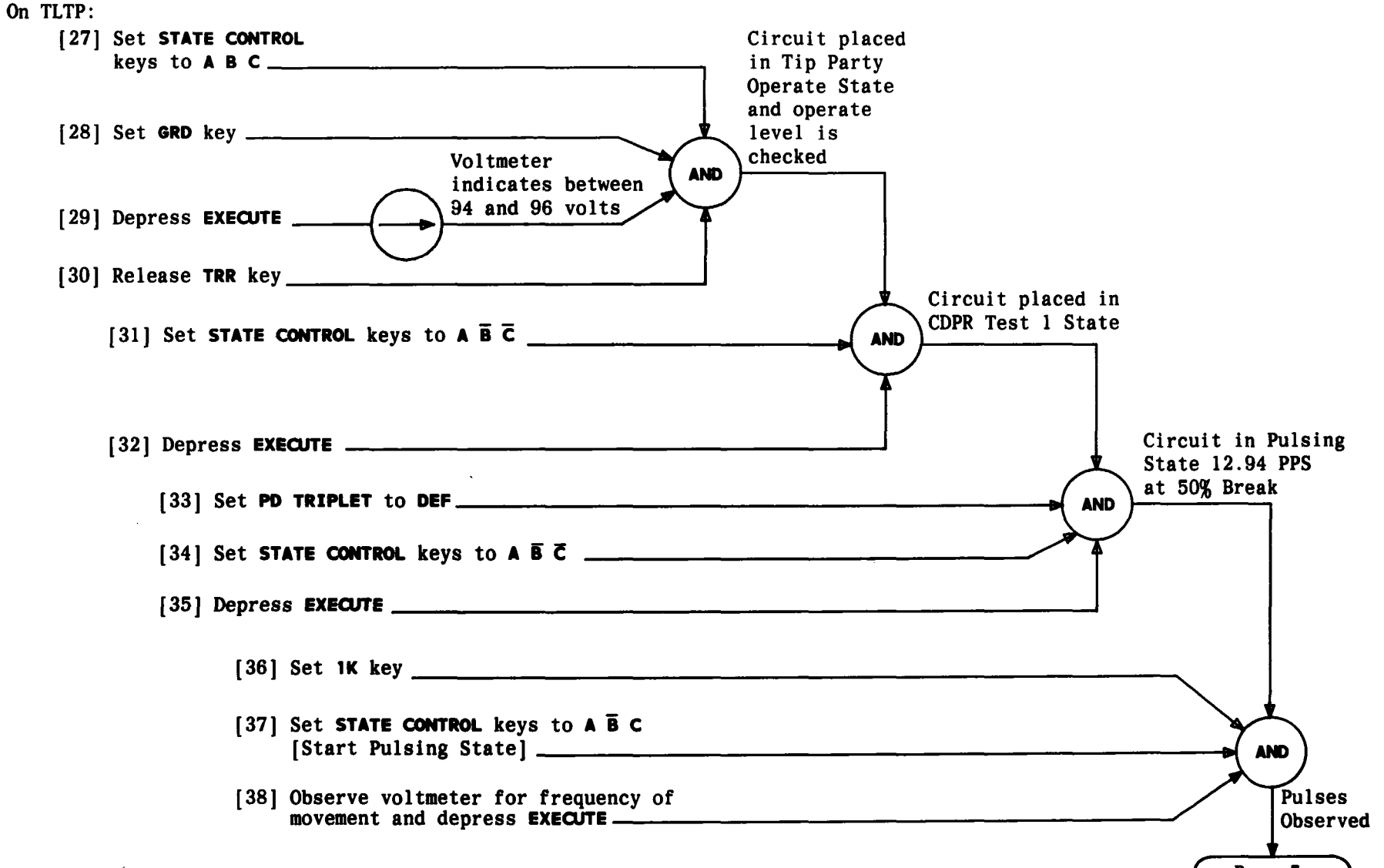

Issue 3	AUG 1984
233-142-100	DLP
PAGE 4 of 7	533

TEST OPERATION OF DIAL PULSE RECEIVER TEST CIRCUIT

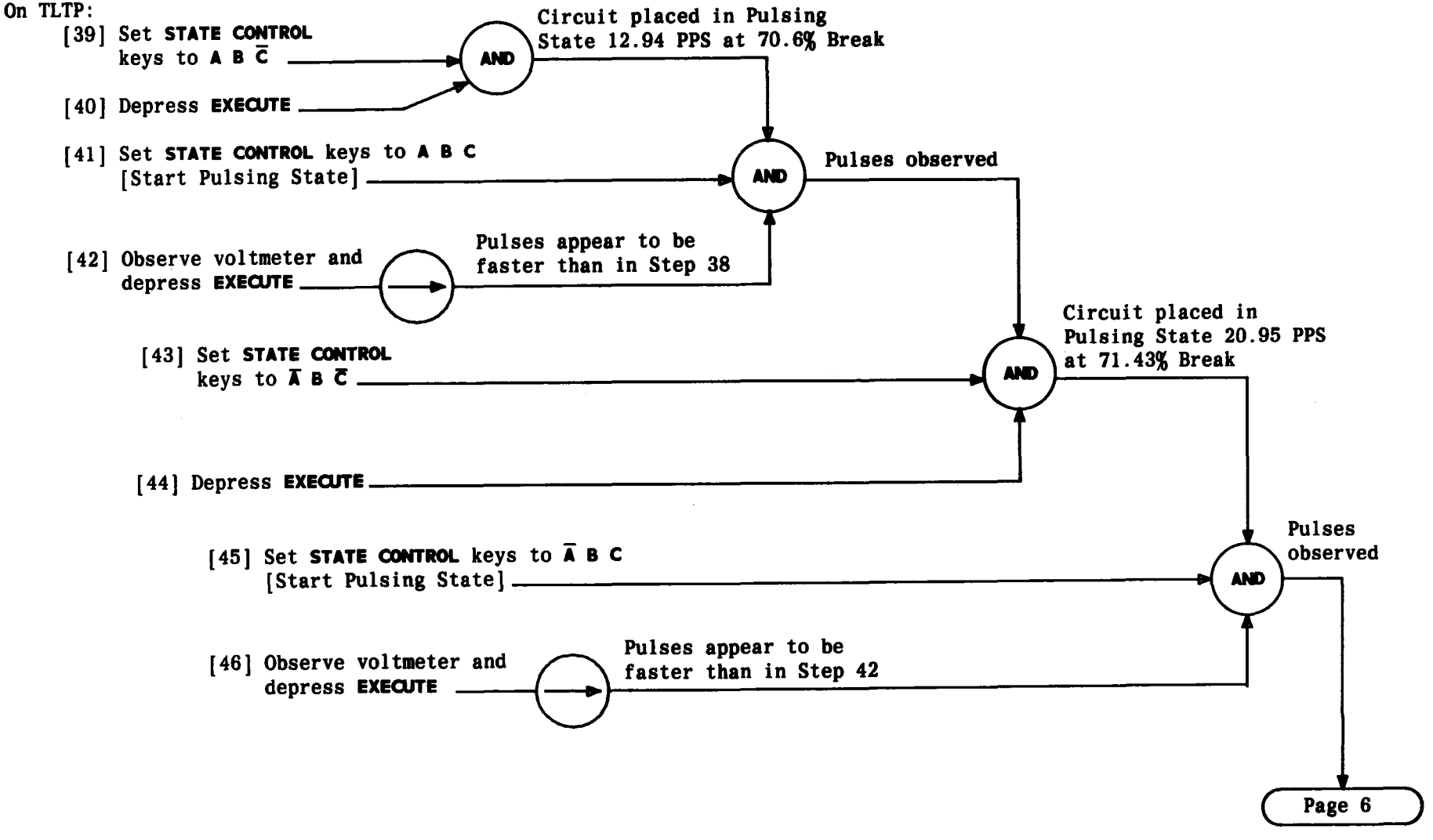

TEST OPERATION OF DIAL PULSE RECEIVER TEST CIRCUIT

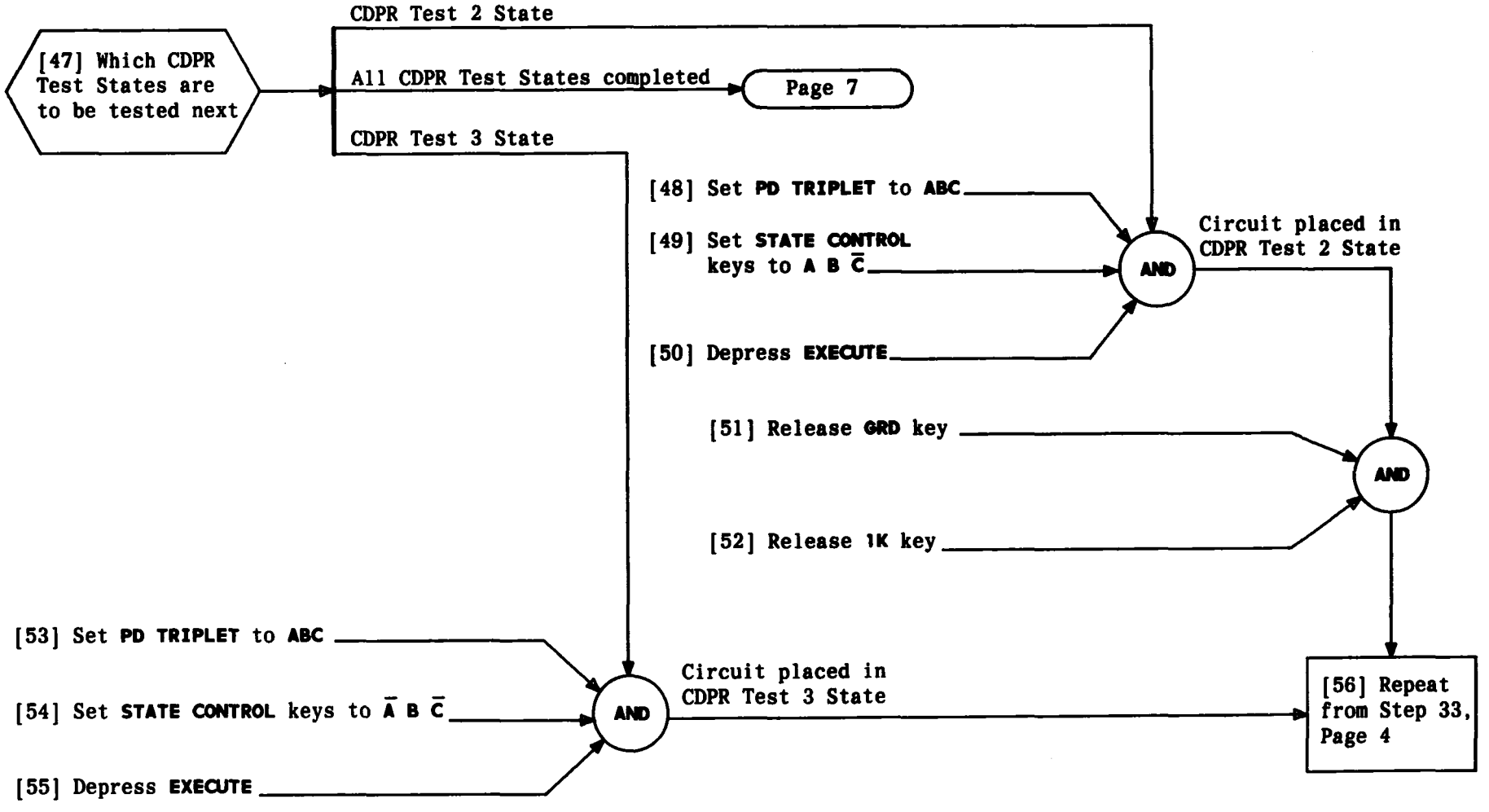

TEST OPERATION OF DIAL PULSE RECEIVER TEST CIRCUIT

On TLTP:

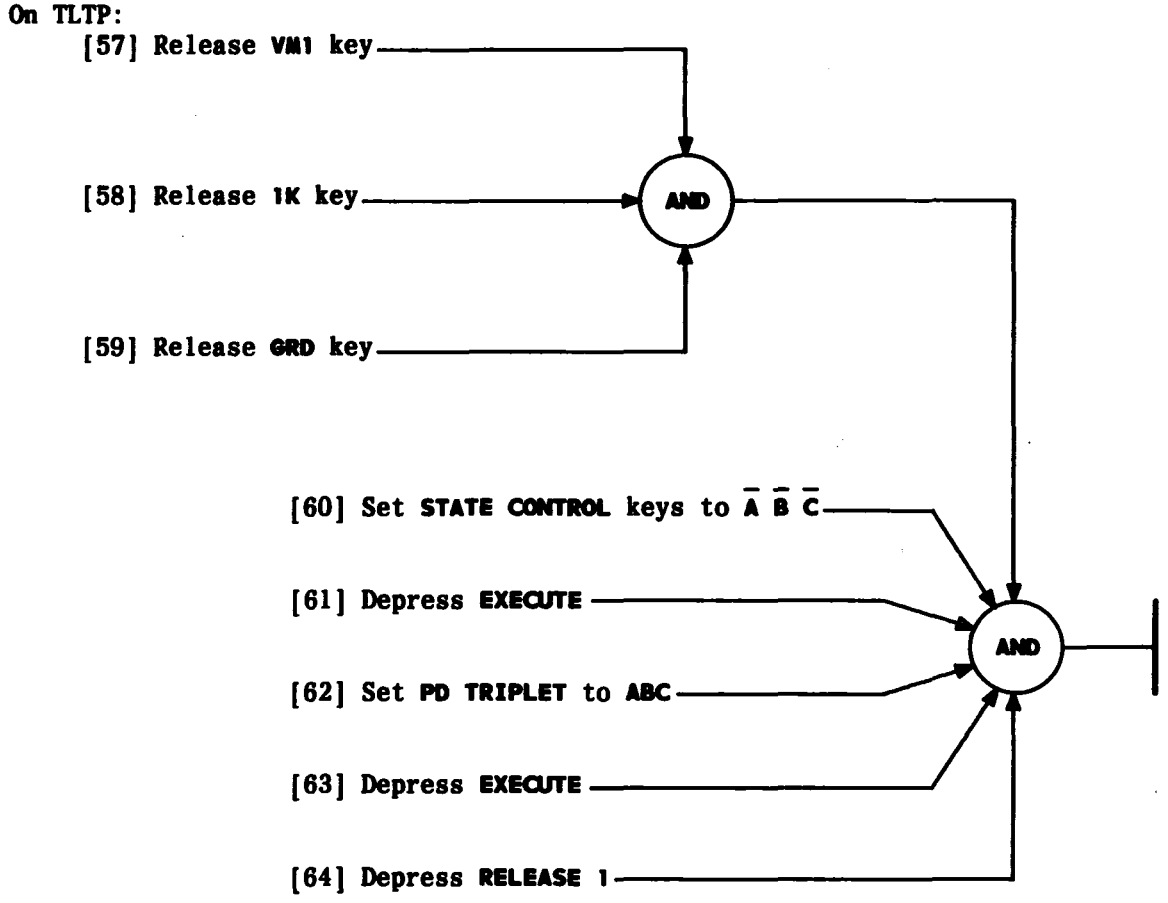

TEST OPERATION OF DIAL PULSE RECEIVER TEST CIRCUIT

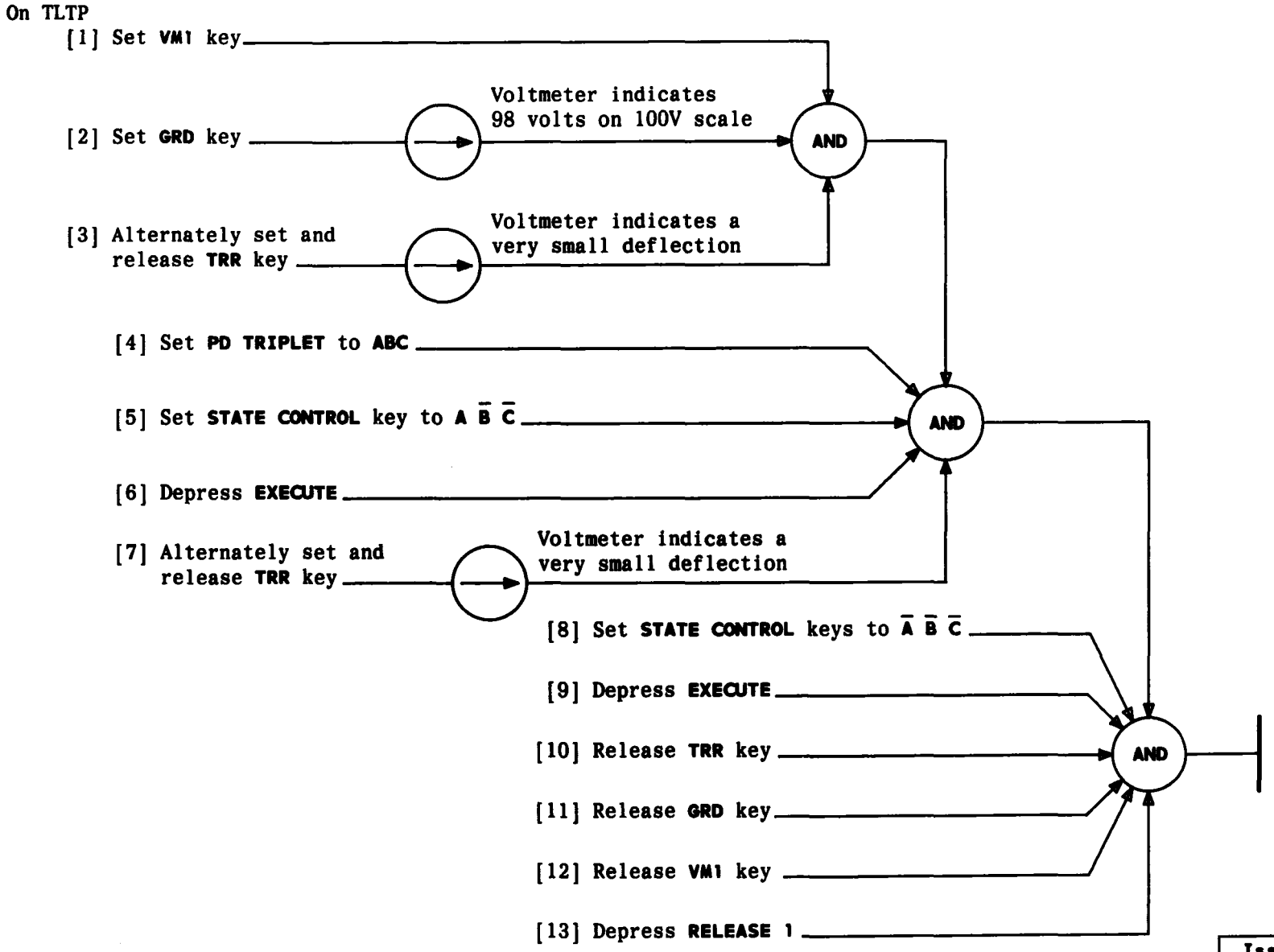

TEST OPERATION OF TRANSMISSION TEST TERMINATION CIRCUIT

Issue 3	AUG 1984
233-142-100	DLP
PAGE 1 of 1	534

Using Form ESS 3100,

[1] Identify Office Equipment Number for all unassigned lines

[2] At 296-6C switch on Network Frame, locate line sensor coil to be modified [DLP-524]

[3] Remove all straps on line sensor coil

[4] Install straps on line sensor coil for loop start line [DLP-526]

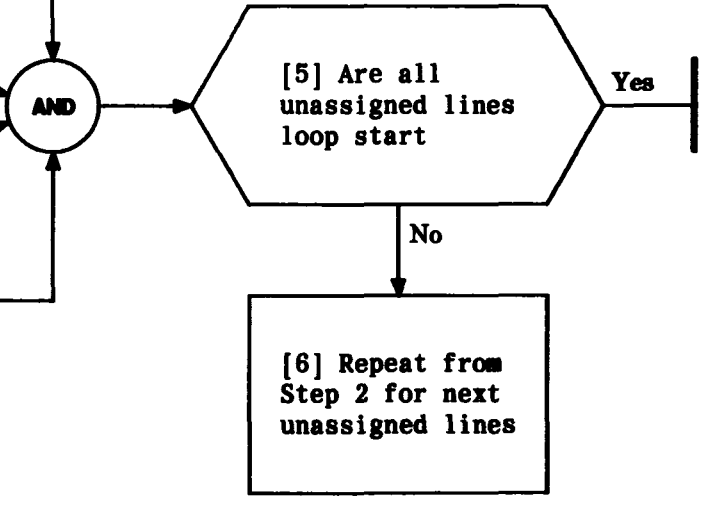

REWIRE UNASSIGNED LINES AS LOOP START

[1] Using office records Form ESS 3107, identify all return telephone numbers without automatic dial-up feature

[2] For each identified return telephone number, list corresponding office code and telephone number (trigger number)

[3] See NOTE 1. Dial trigger number from prepared list

[4] Remain off-hook for at least 10 seconds without exceeding a 30-second maximum

[5] Place receiver on-hook

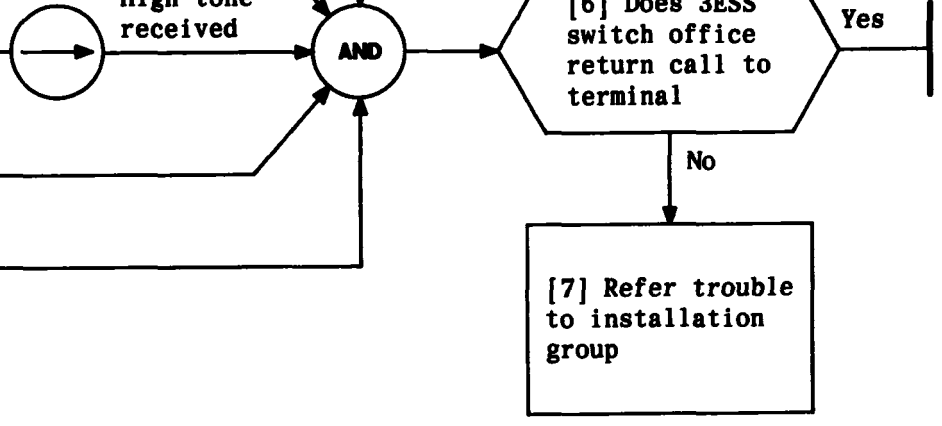

NOTE 1
Busy tone may be received if another autoconnect is in progress, port is busy, TTYC is in use by a different message class, or an incorrect translation linkage exits from line to callback terminal

CHECK AUTOCONNECT FACILITY

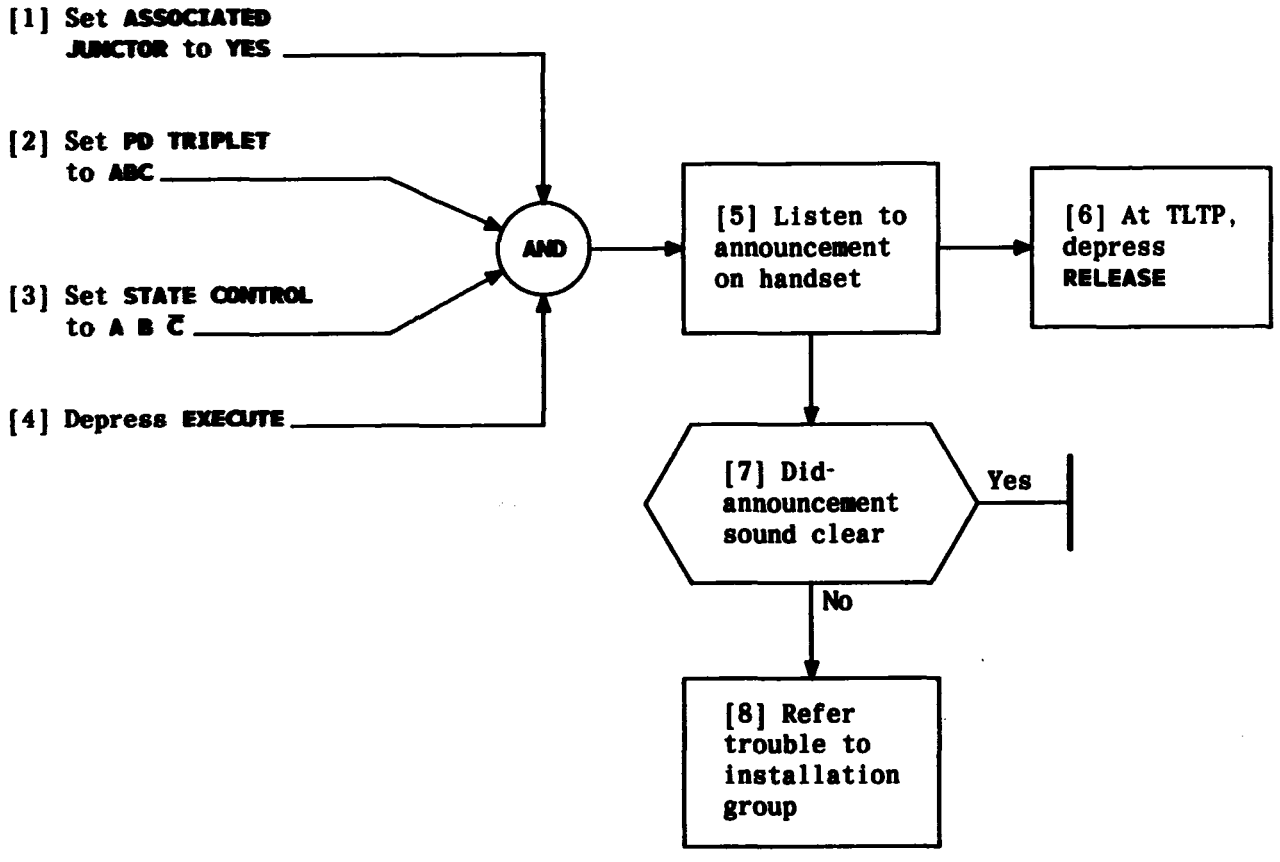

PERFORM CLARITY CHECK ON RECORDED ANNOUNCEMENT

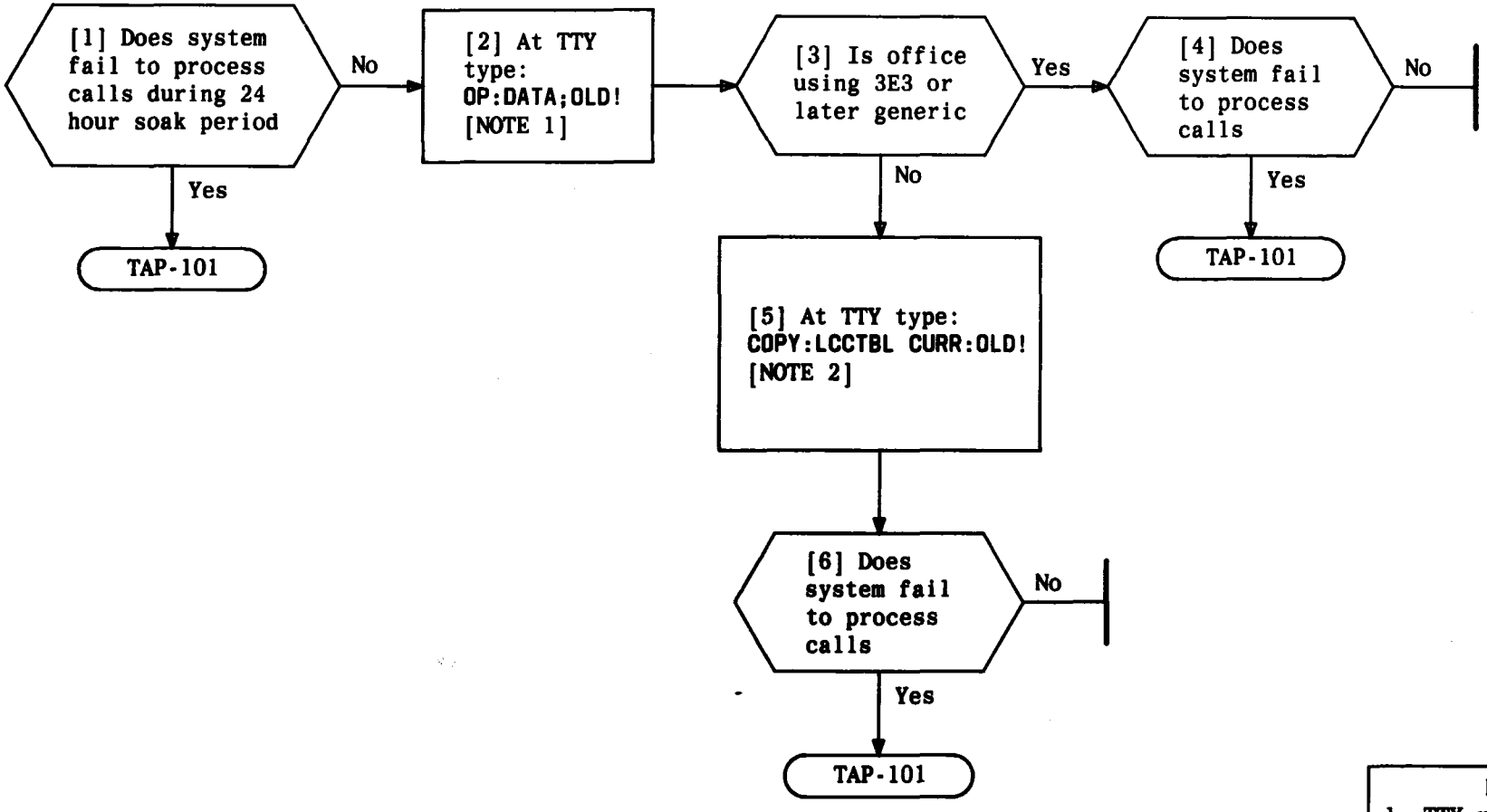

NOTES

1. TTY responds with following output message
   tt OP DATA COMPL
2. TTY responds with following message:
   tt COPY LCCTBL COMPL

Issue 3	AUG 1984
233-142-100	DLP
PAGE 1 of 1	538

VERIFY SUCCESS OF SYSTEM SOAK

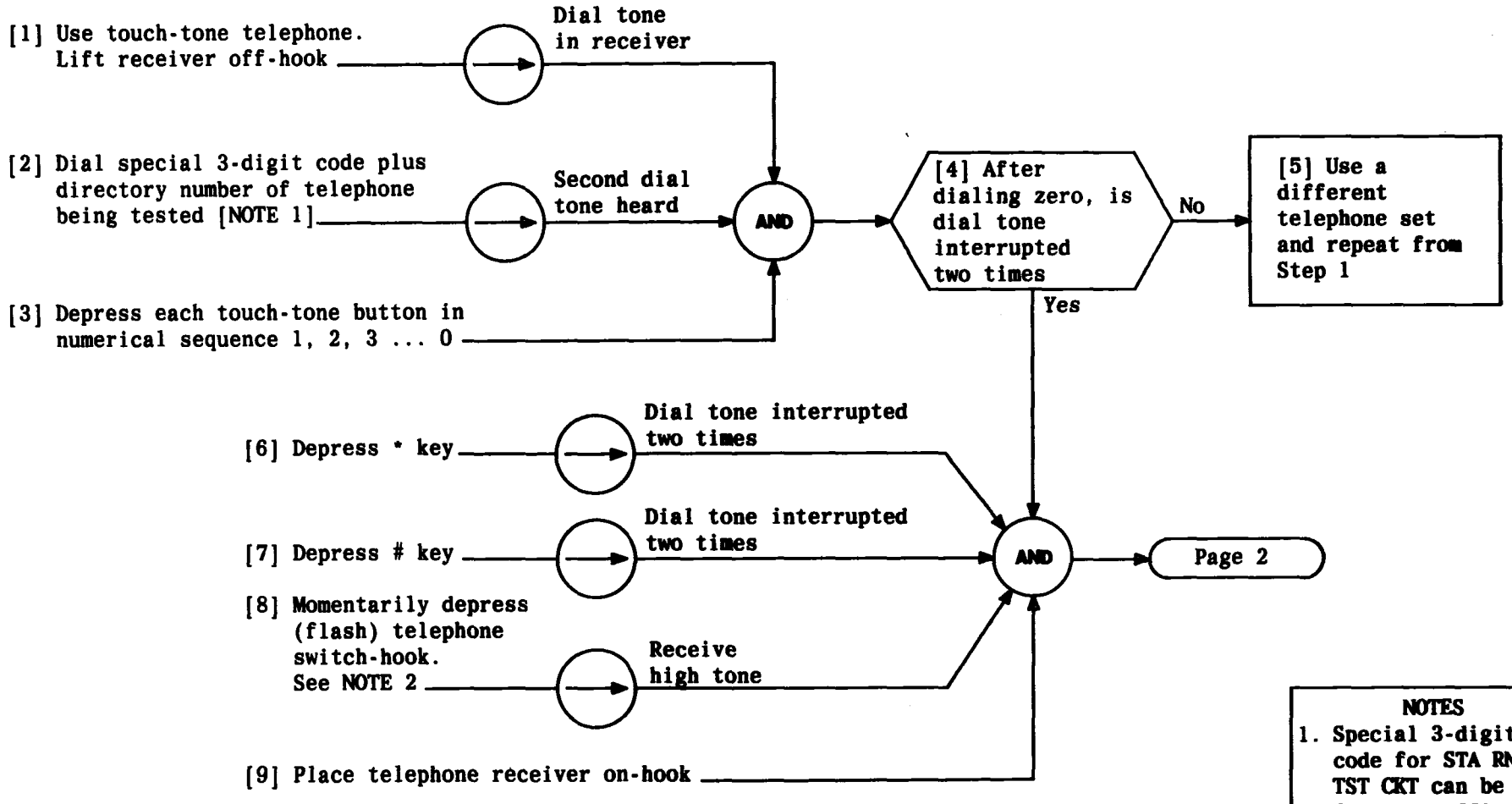

NOTES

1. Special 3-digit code for STA RNG TST CKT can be found in office records, form ESS 3300-1
2. High tone can be interrupted if tip party is on party line

Issue 3	AUG 1984
233-142-100	DLP
PAGE 1 of 2	539

TEST OPERATION OF STATION RINGER TEST CIRCUIT

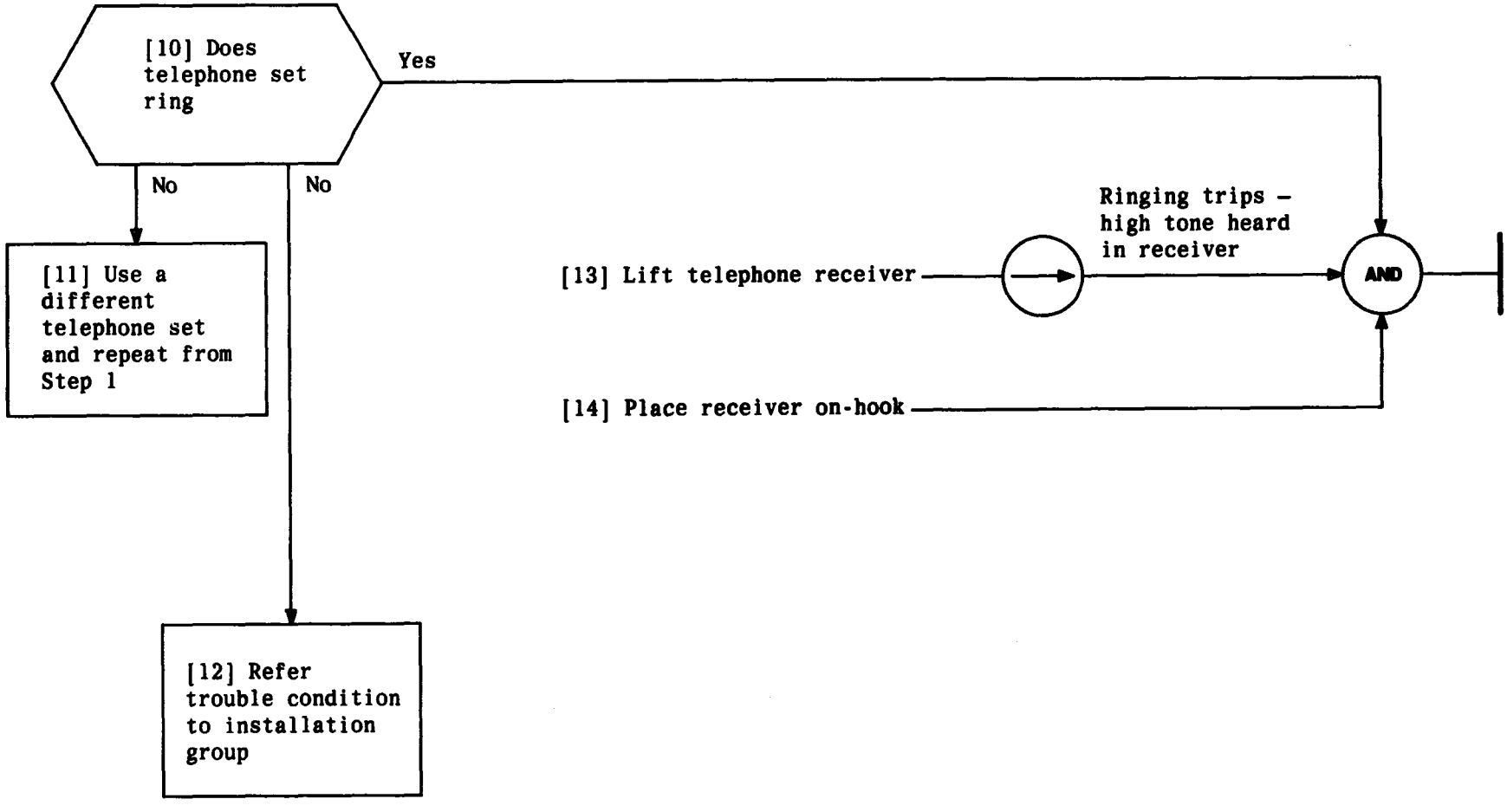

TEST OPERATION OF STATION RINGER TEST CIRCUIT

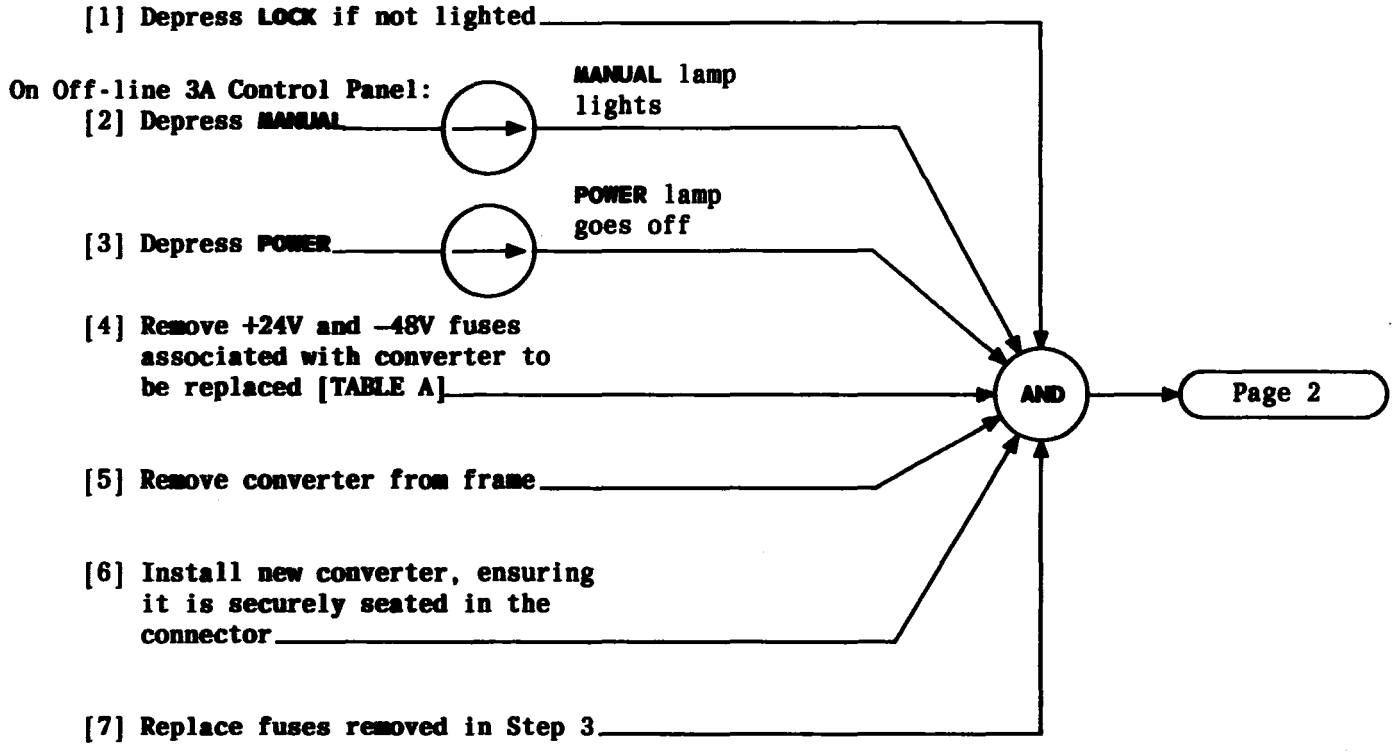

REPLACE DEFECTIVE CONVERTER IN PROCESSOR FRAME

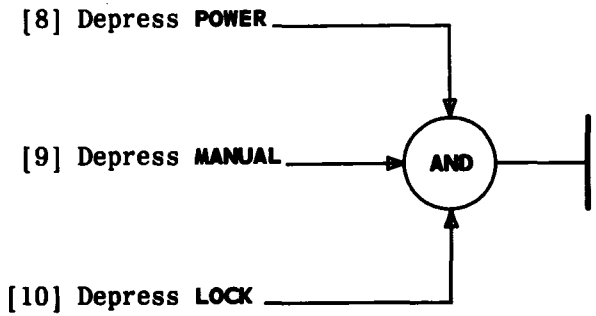

TABLE A									
CONV. OUTPUT DESIG.	+3V PM054D	+3V PM054C	+5V PM061C	+3V PM054A	+3V PM054B	+5V PM061D	+3V PM058D	+3V PM054F	+3V PM054E
+24V fuse	AA11	AA5	AA5	AA5	AA5	AA12	AA12	AA12	AA12
–48V fuse	A0	A1	A1	A1	A1	A2	A2	A2	A2
EQUIP. LOCATION	10-04	10-09	10-14	10-19	10-24	10-29	10-34	10-38	10-42
CONV. OUTPUT DESIG.	+3V PM058A	+3V PM058E	+5V PM061A	+3V PM062C	+3V PM062A	+5V PM061B	+3V PM062B	+3V PM058F	+3V PM058C
+24V fuse	AA11	AA10, AA6	AA6	AA6	AA6	AA4	AA4	AA4	AA4
–48V fuse	A0	A3	A3	A3	A3	A4	A4	A4	A4
EQUIP. LOCATION	06-05	06-09	06-14	06-19	06-24	06-29	06-34	06-38	06-42
CONV. OUTPUT DESIG.	+5V PM039A	+3V PM058B							
+24V fuse	AA10	AA10							
–48V fuse	A0	A0							
EQUIP. LOCATION	02-05	02-09							

REPLACE DEFECTIVE CONVERTER IN PROCESSOR FRAME

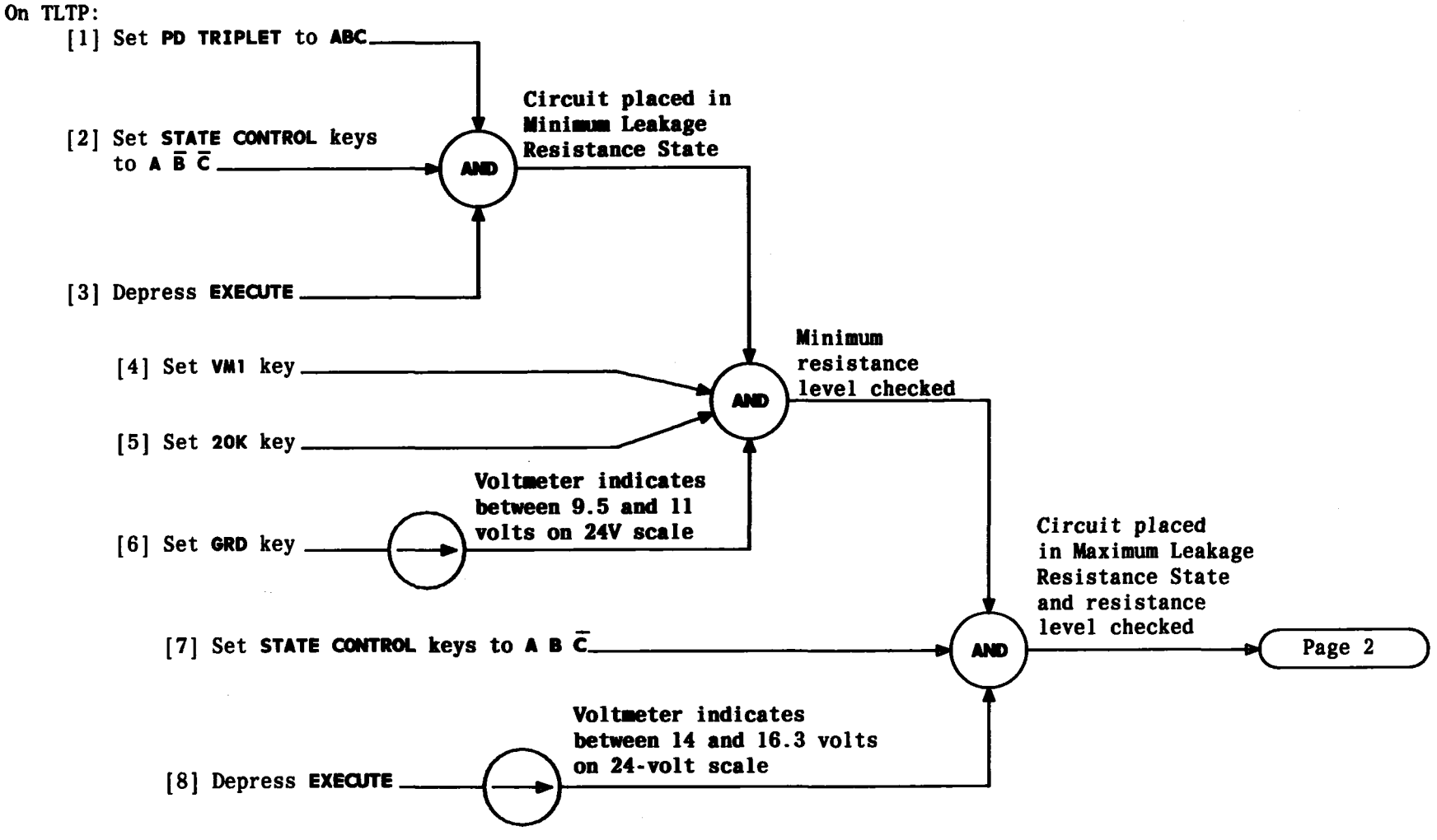

TEST OPERATION OF LOOP ENVIRONMENT TEST CIRCUIT

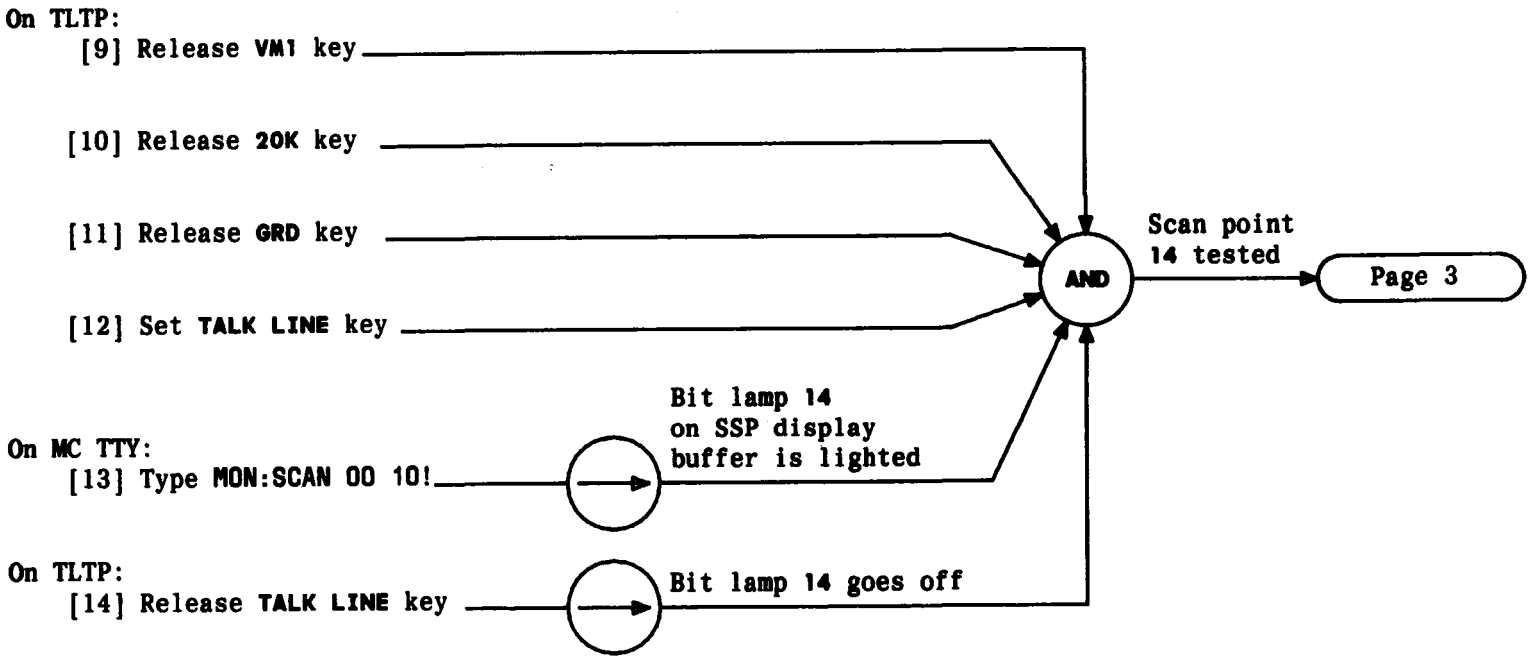

TEST OPERATION OF LOOP ENVIRONMENT TEST CIRCUIT

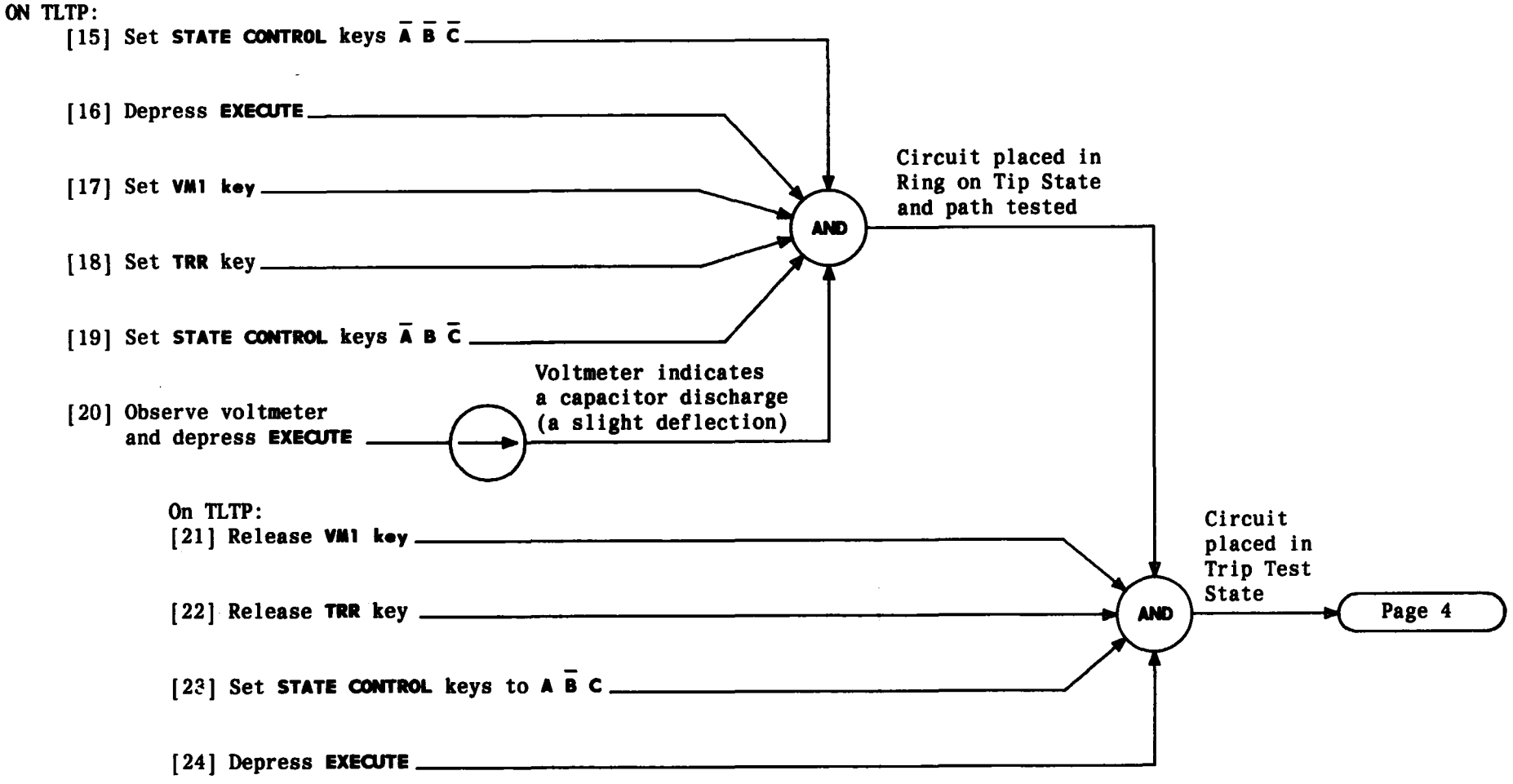

TEST OPERATION OF LOOP ENVIRONMENT TEST CIRCUIT

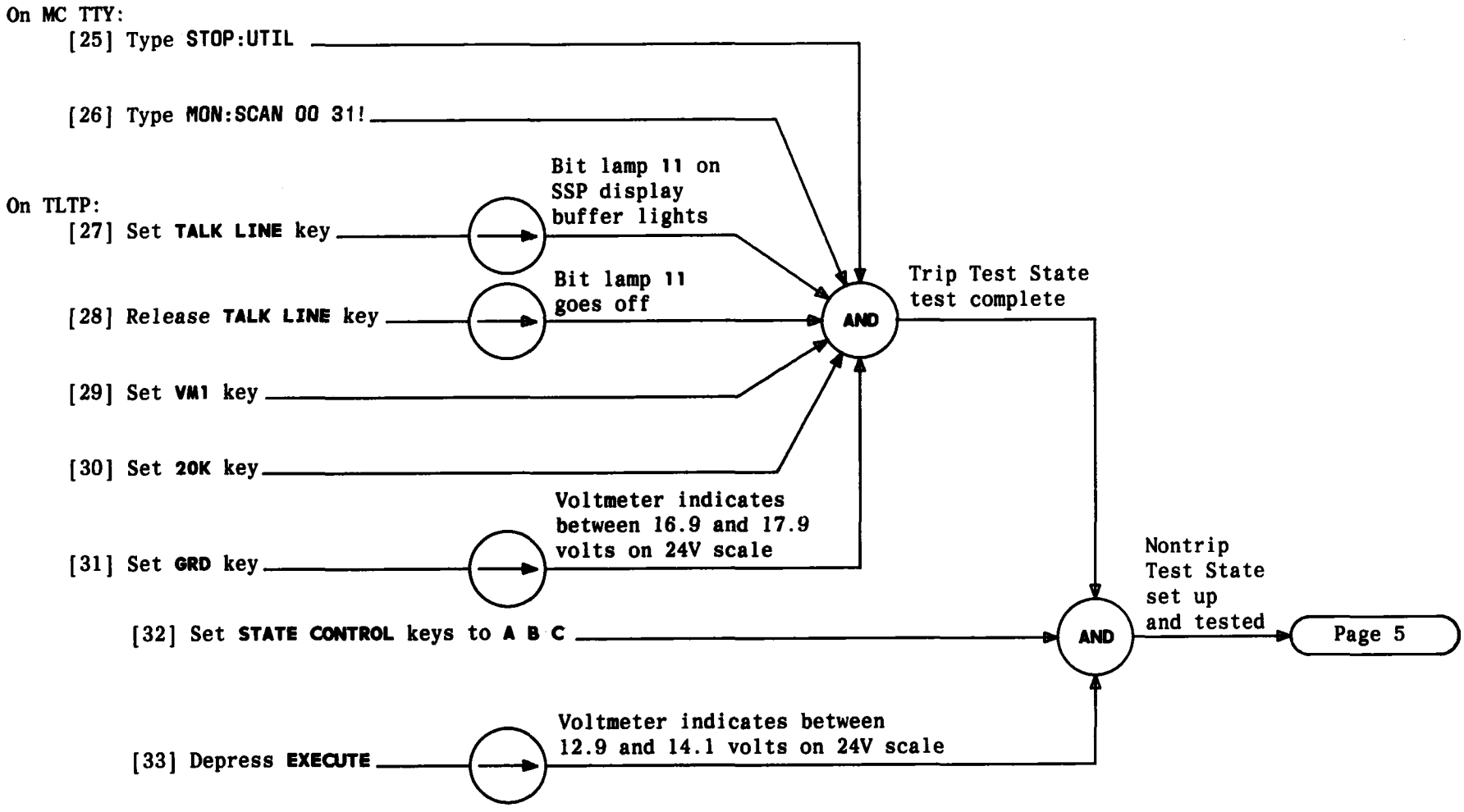

TEST OPERATION OF LOOP ENVIRONMENT TEST CIRCUIT

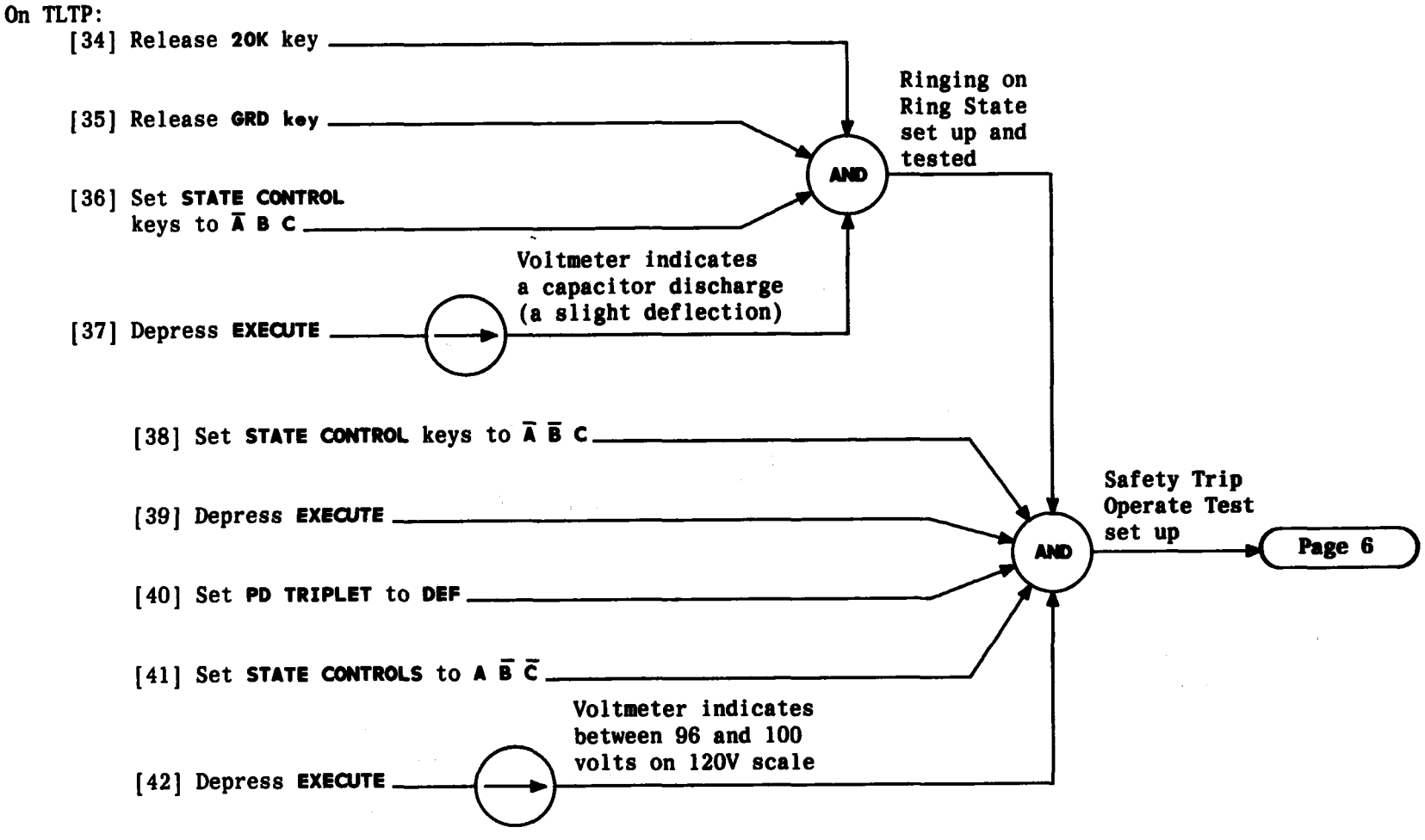

TEST OPERATION OF LOOP ENVIRONMENT TEST CIRCUIT

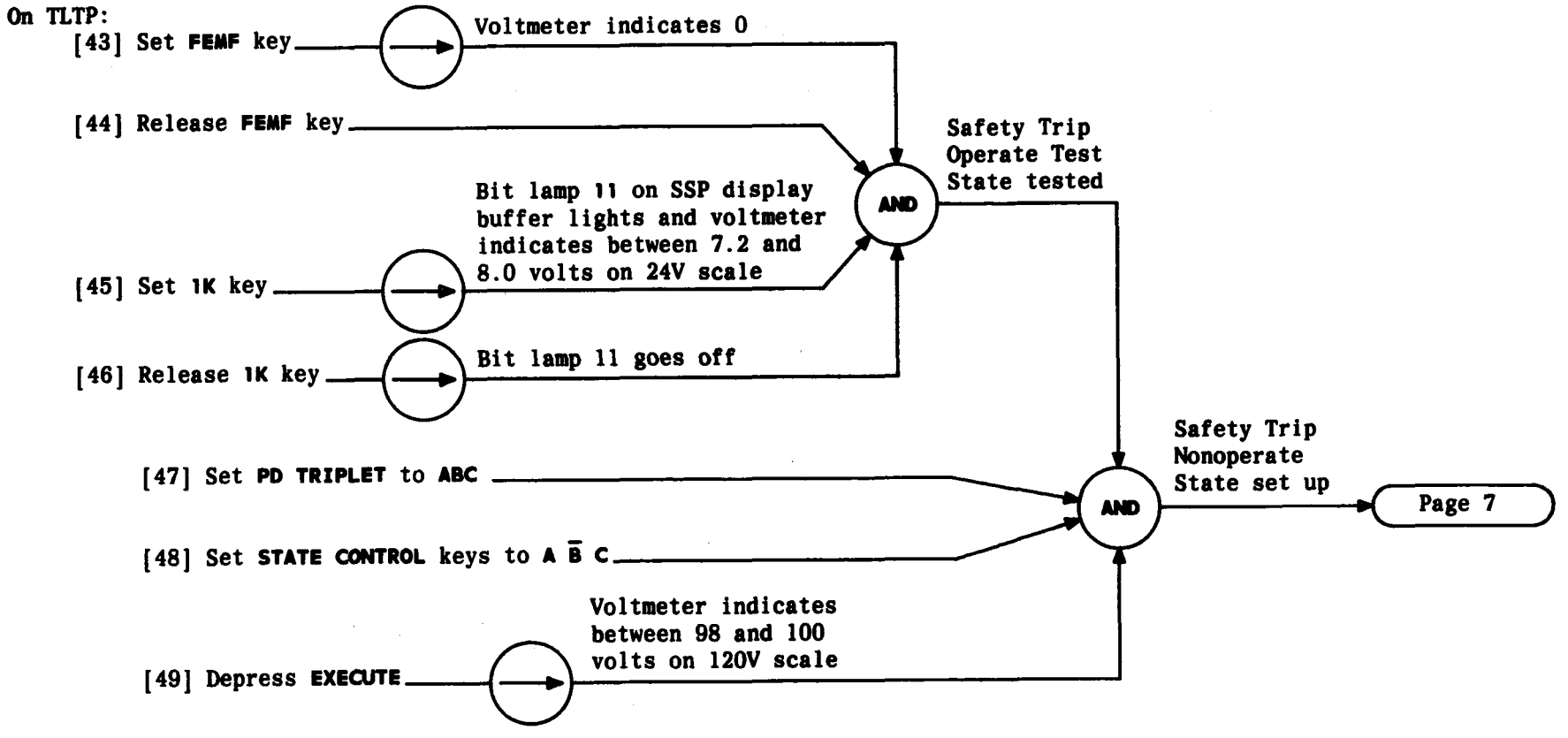

TEST OPERATION OF LOOP ENVIRONMENT TEST CIRCUIT

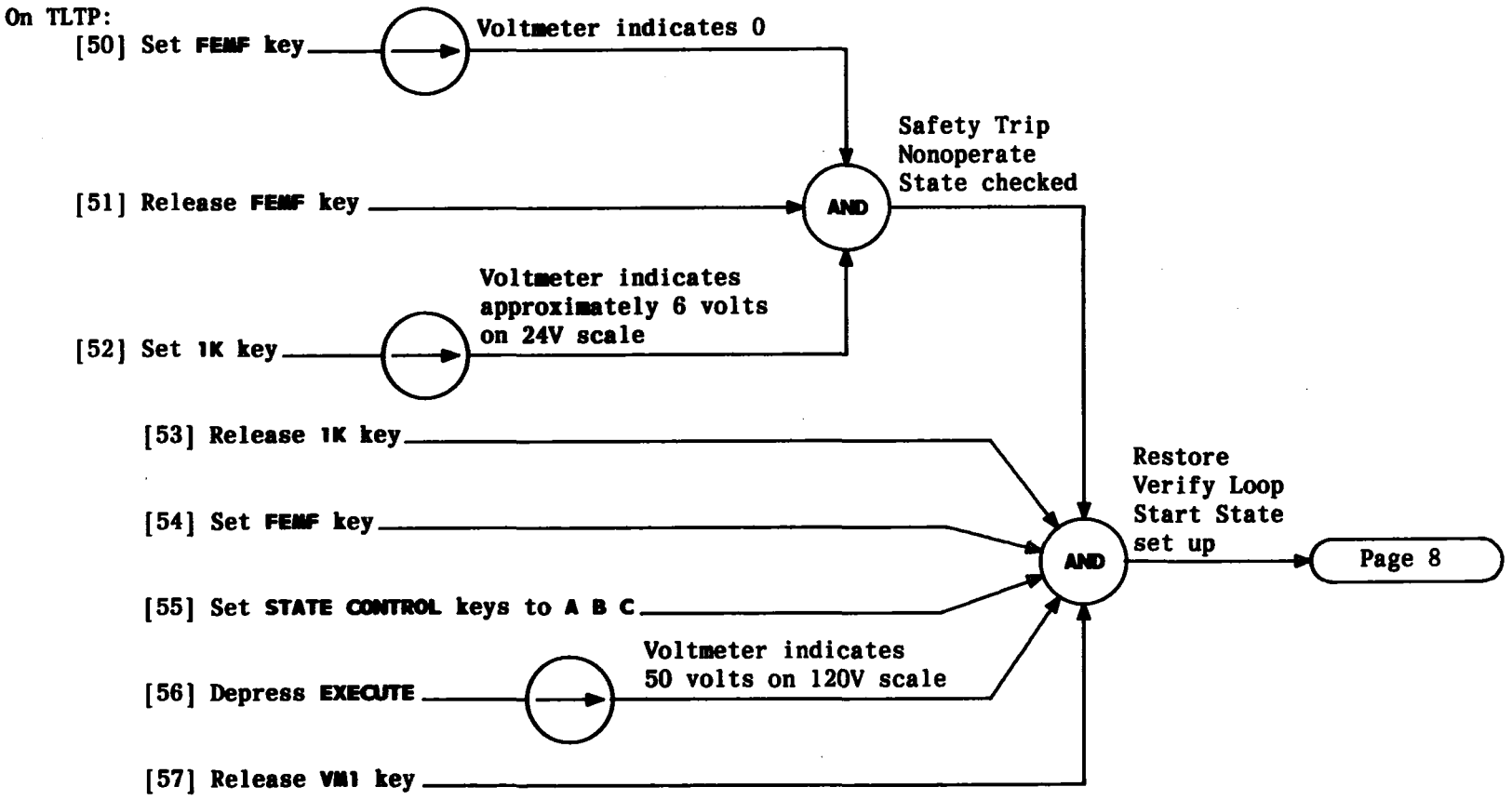

TEST OPERATION OF LOOP ENVIRONMENT TEST CIRCUIT

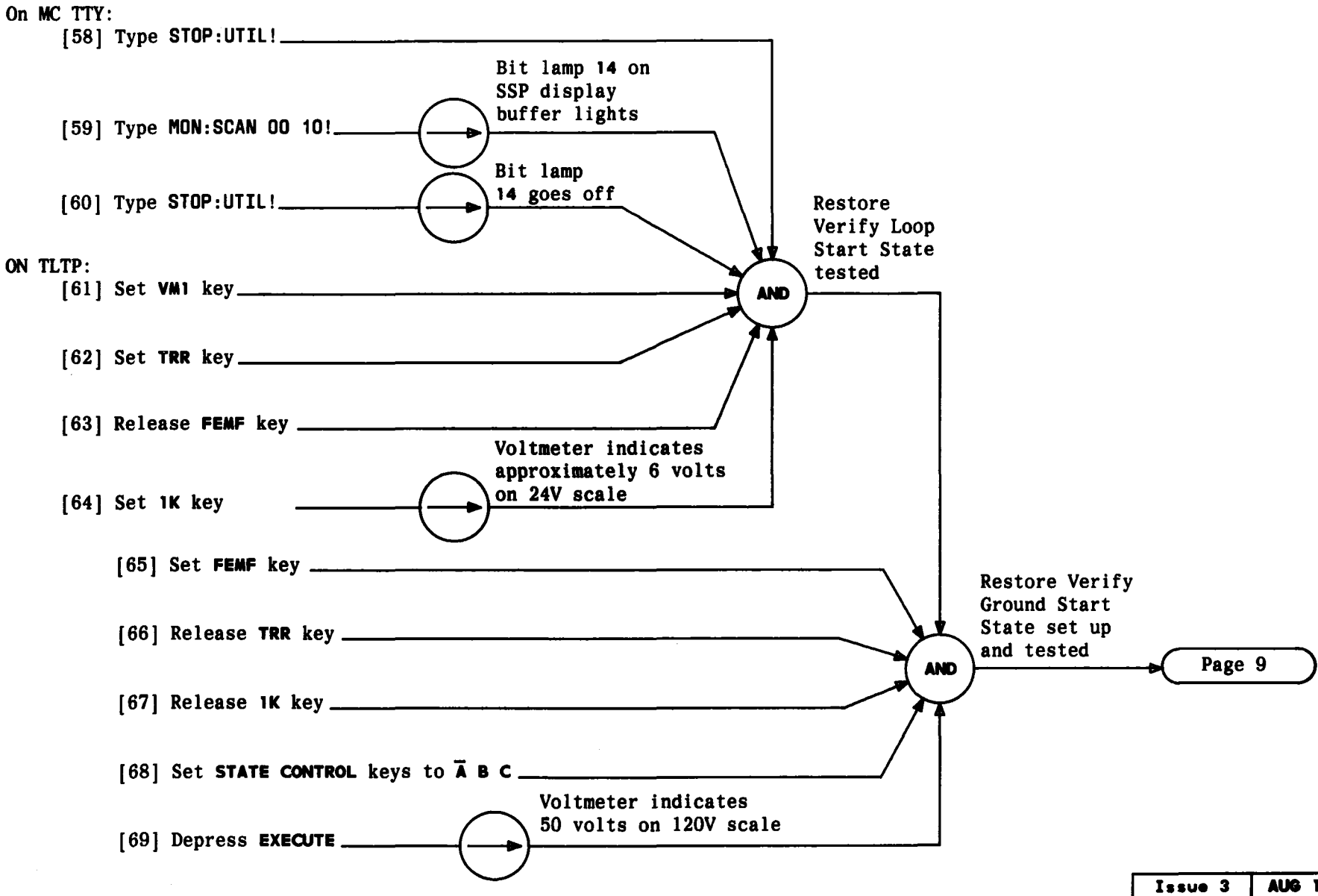

TEST OPERATION OF LOOP ENVIRONMENT TEST CIRCUIT

On TLTP:

[70] Set **STATE CONTROL** keys to $\overline{A}$ $\overline{B}$ $\overline{C}$

[71] Depress **EXECUTE**

[72] Release **FEMF** key

[73] Set **1K** key

Voltmeter indicates approximately 7.8 volts on 24V scale

AND

Coin Plus Voltage State set up and tested

[74] Set **STATE CONTROL** keys to **A** $\overline{B}$ $\overline{C}$

[75] Depress **EXECUTE**

Voltmeter indicates approximately 5.8 volts on 24V scale

AND

Coin Relay Nonoperate State set up and tested

Page 10

[76] Release **1K** key

[77] Set **FEMF** key

Voltmeter indicates 0

TEST OPERATION OF LOOP ENVIRONMENT TEST CIRCUIT

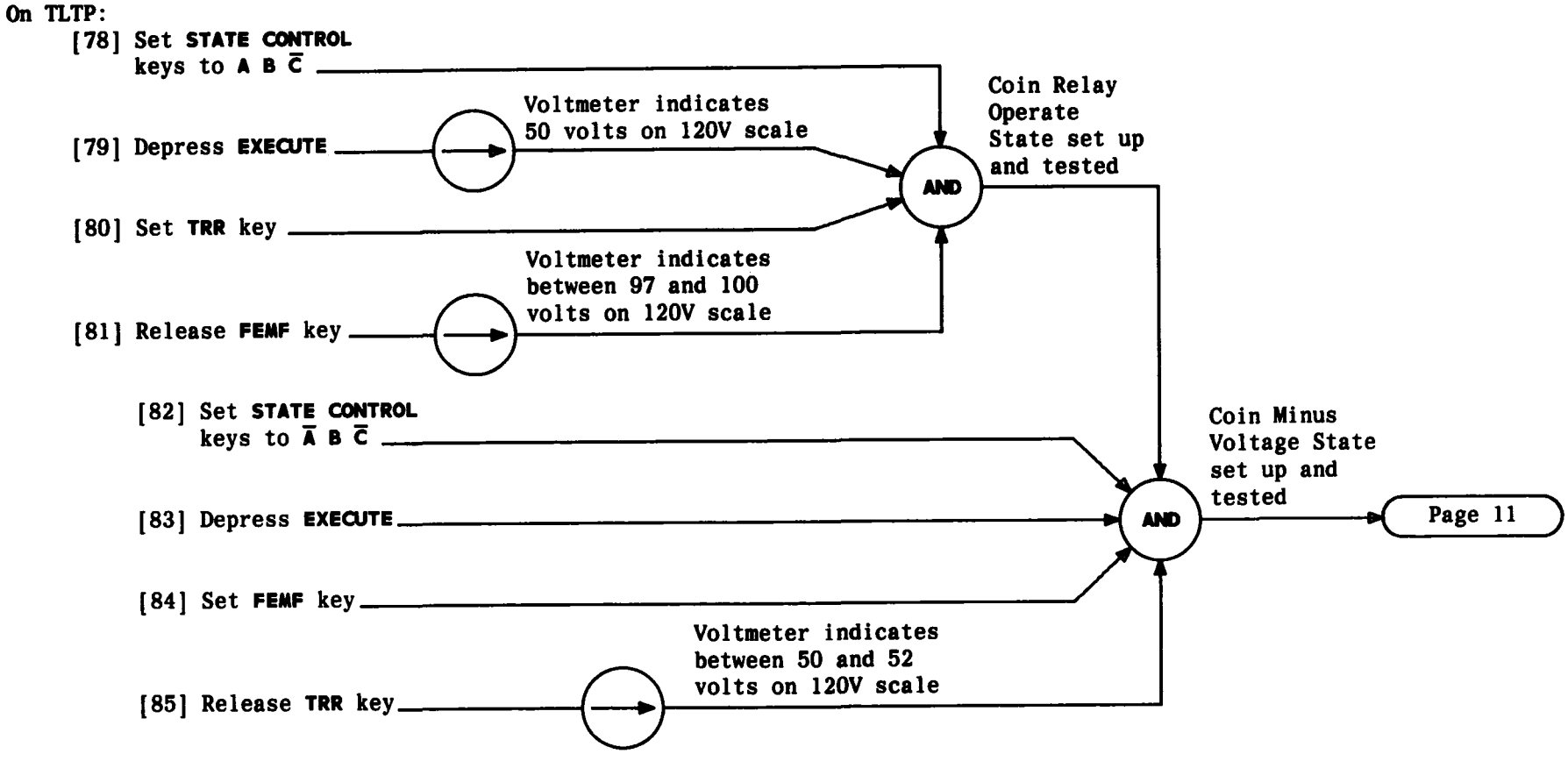

Issue 3	AUG 1984
233-142-100	DLP
PAGE 10 of 13	541

TEST OPERATION OF LOOP ENVIRONMENT TEST CIRCUIT

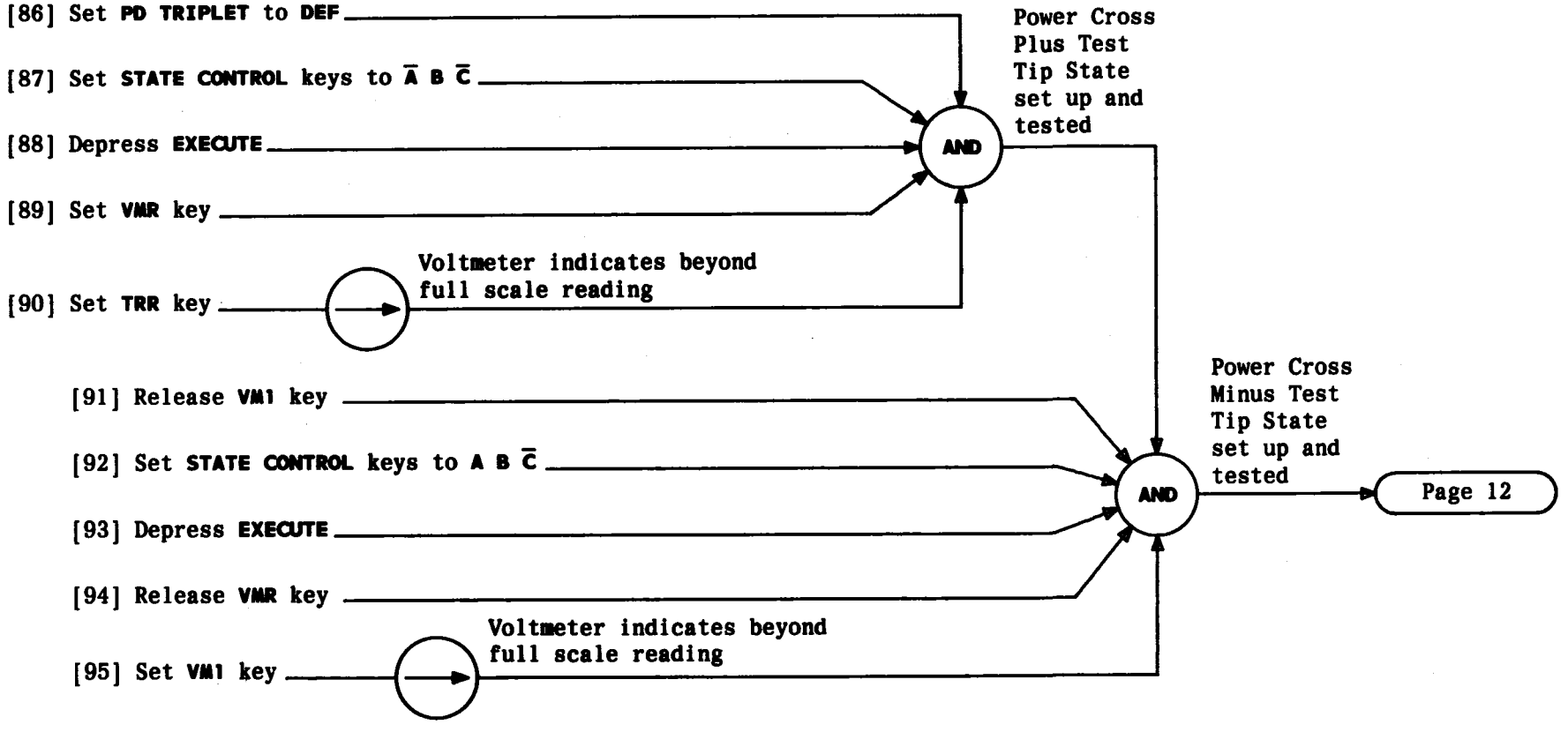

TEST OPERATION OF LOOP ENVIRONMENT TEST CIRCUIT

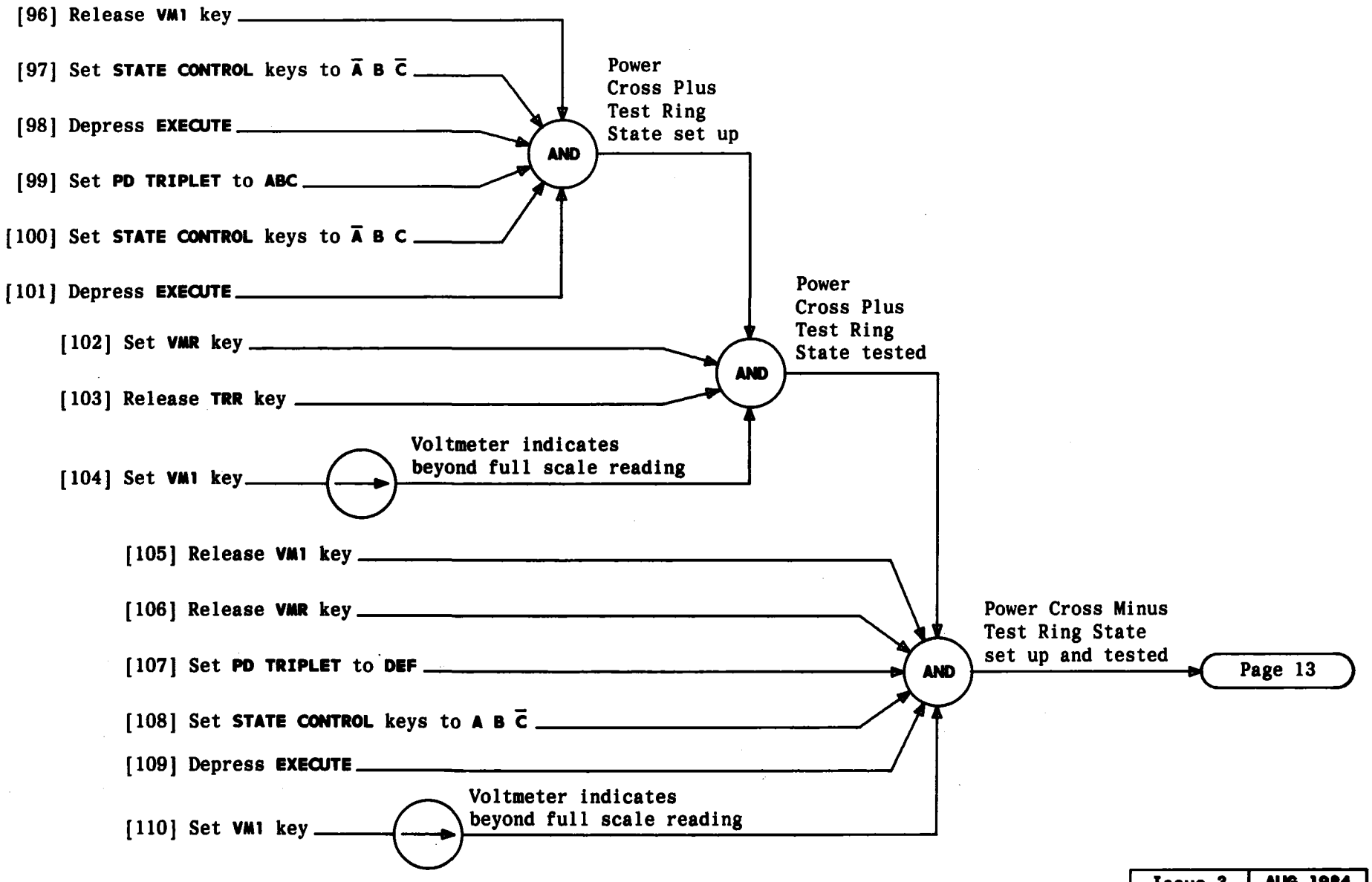

TEST OPERATION OF LOOP ENVIRONMENT TEST CIRCUIT

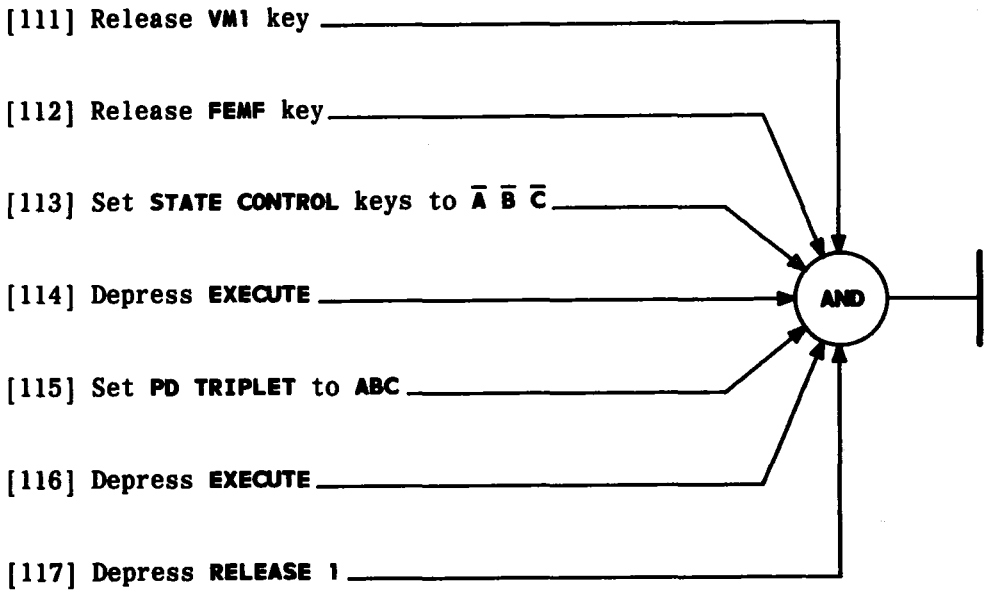

TEST OPERATION OF LOOP ENVIRONMENT TEST CIRCUIT

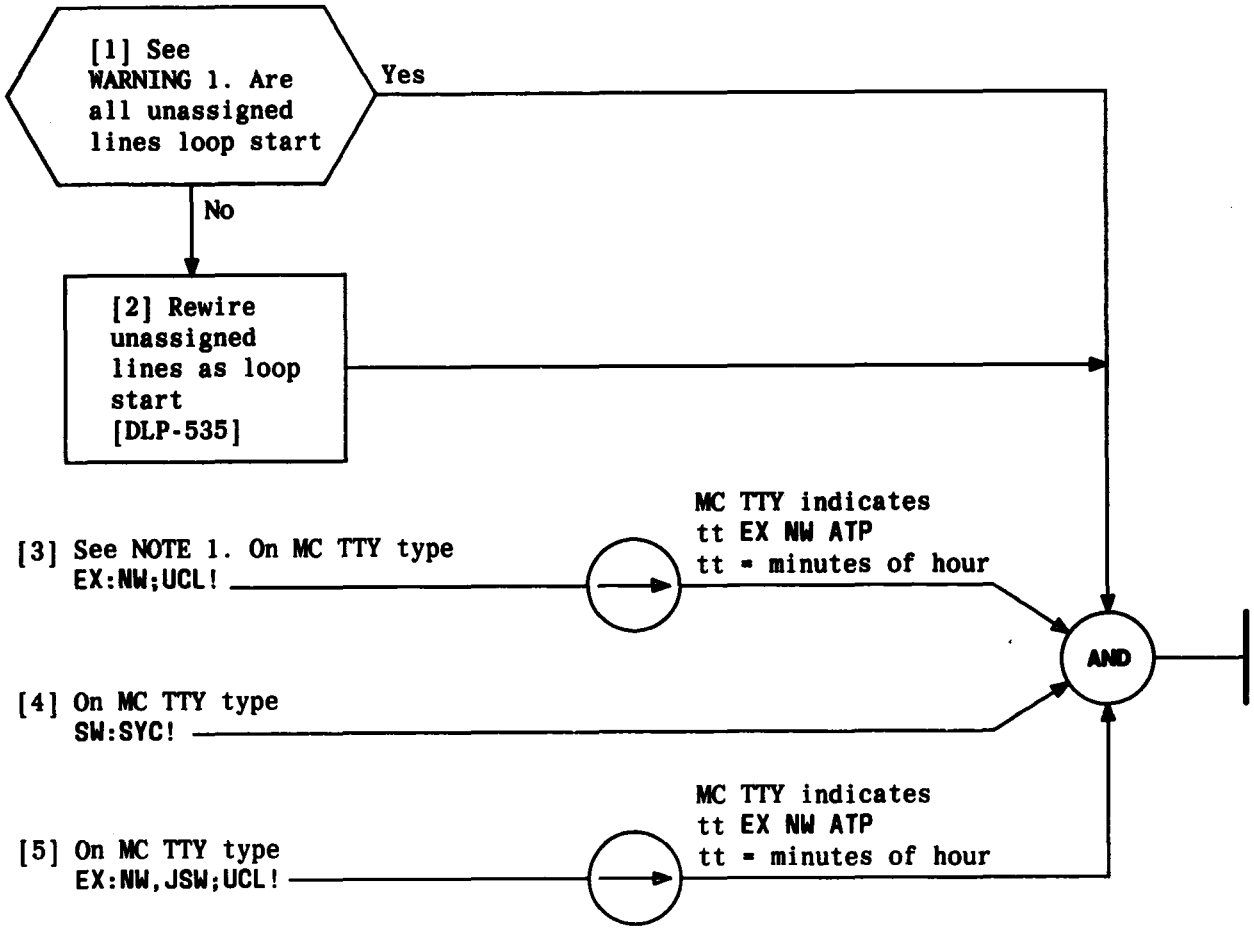

NOTE 1
All equipped concentrator groups (1-15) are exercised. Running time exceeds 30 minutes for each concentrator group

WARNING 1
Equipment damage may occur unless unassigned lines are loop start

EXERCISE NETWORK

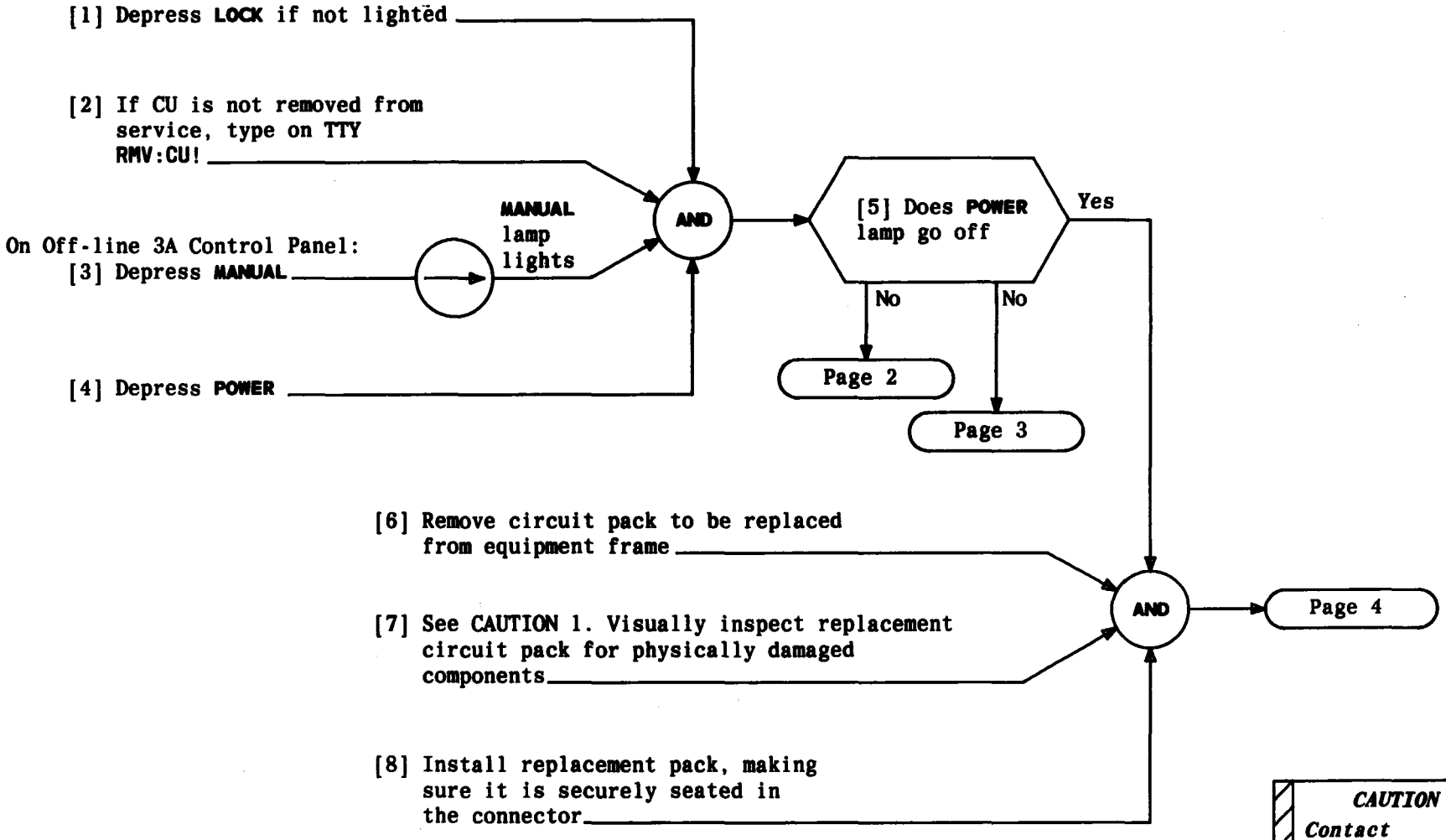

CAUTION 1

Contact contamination may occur unless circuit pack is handled only by the edges

REPLACE CIRCUIT PACK IN PROCESSOR FRAME

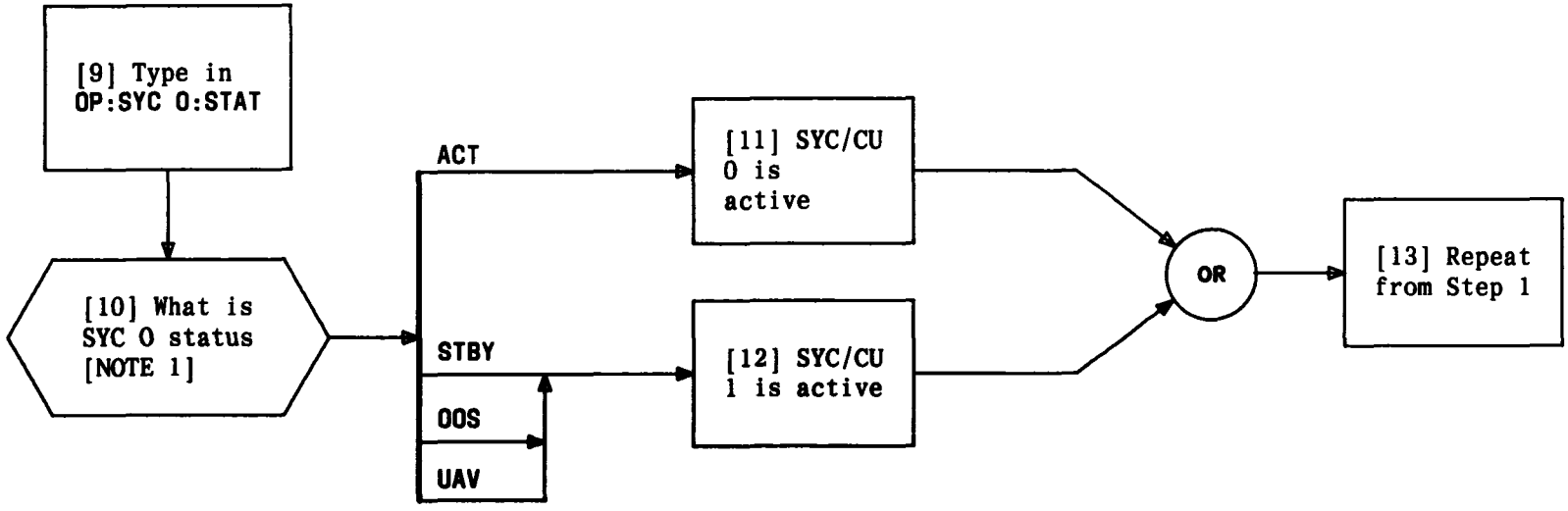

NOTE 1
A CU is OOS when either the CU or peripheral controller (SC, NWC, PPD and/or FIOC) are removed from service. A CU is UAV when any of the above have power removed or **LOCK** and/or **FORCE SELECT** are lighted

REPLACE CIRCUIT PACK IN PROCESSOR FRAME

[14] See CAUTION 2. Determine which side appears to be on-line

[15] Open the off-line 3A Control Panel and set **TEST MODE** key located on rear side of panel door to **TEST**

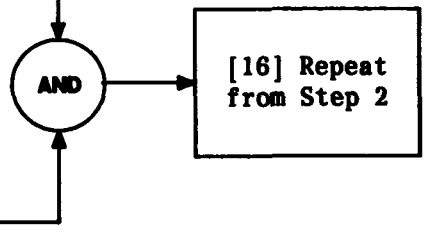

CAUTION 2

This procedure may result in system initialization if off-line 3A CC cannot be determined. If possible, perform during low traffic periods

REPLACE CIRCUIT PACK IN PROCESSOR FRAME

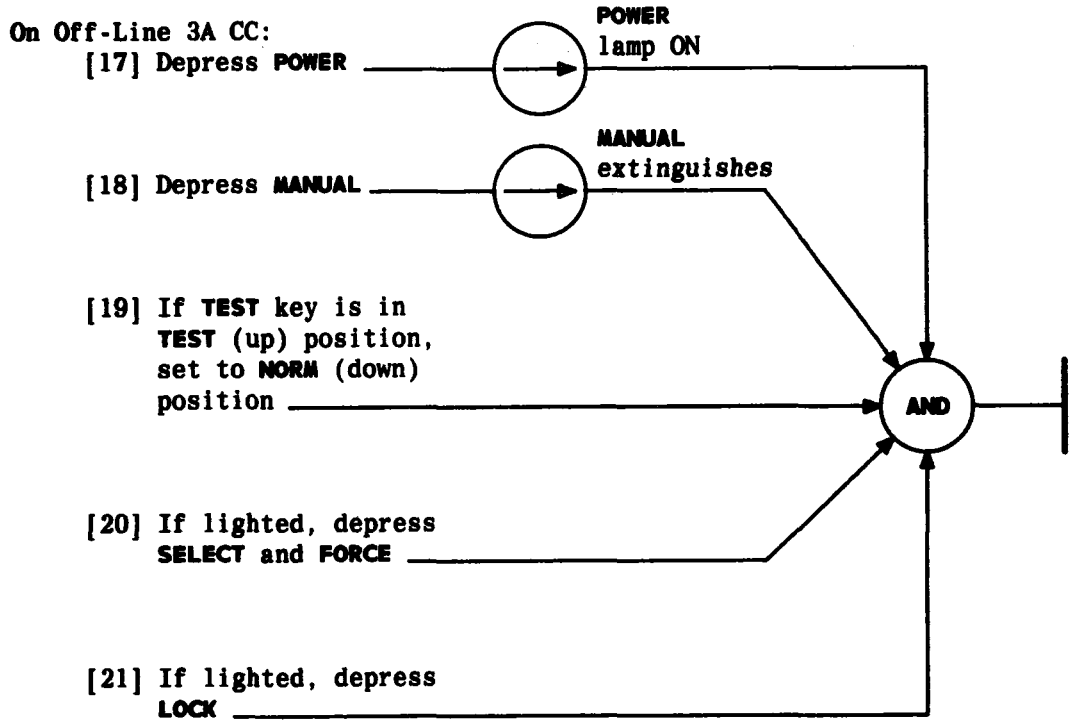

REPLACE CIRCUIT PACK IN PROCESSOR FRAME

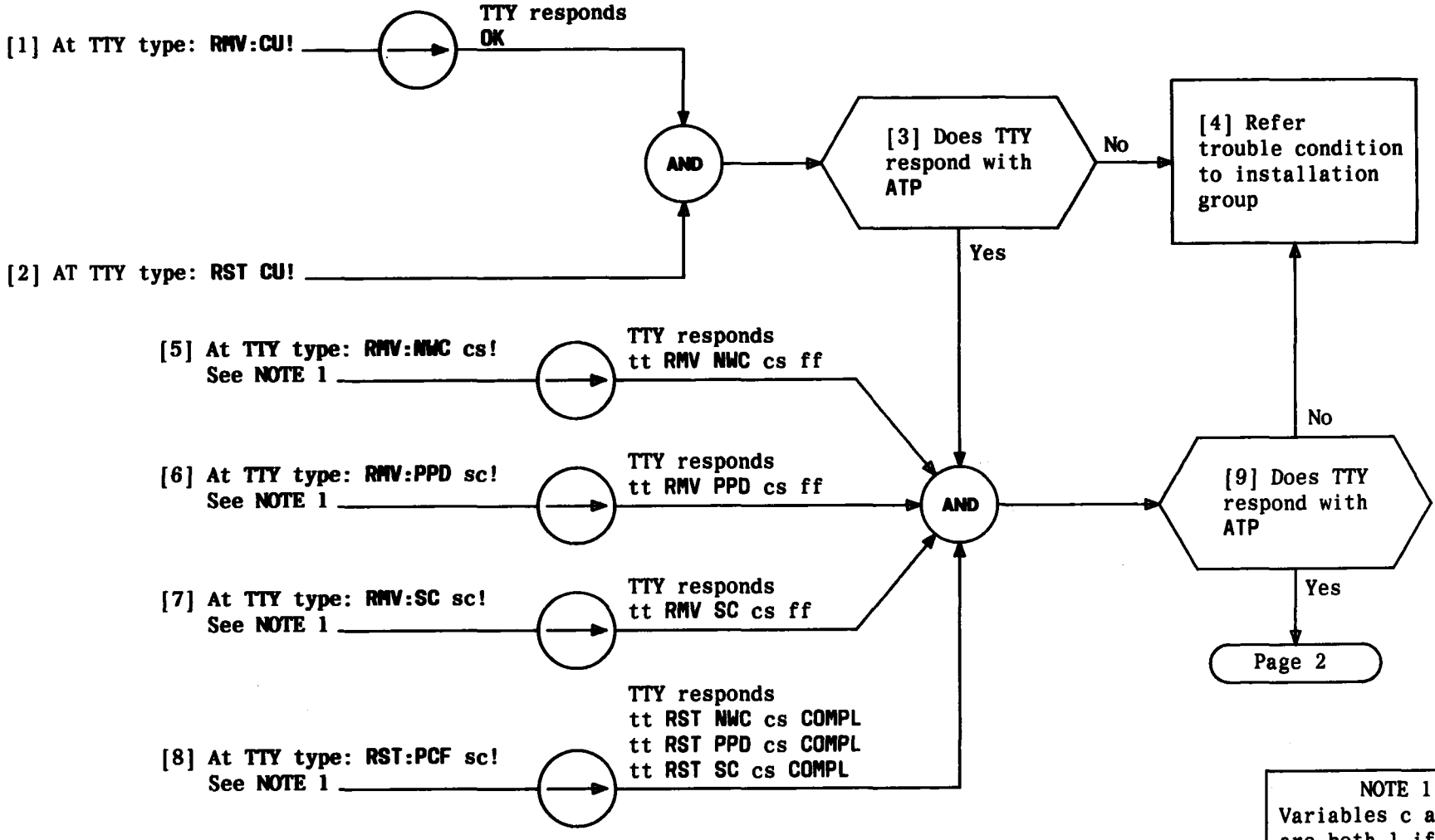

NOTE 1
Variables c and s are both 1 if SYC 1 is marked standby, or are both 0 if SYC 0 is marked standby on the SSP

RUN MAJOR CONTROL UNITS DIAGNOSTICS

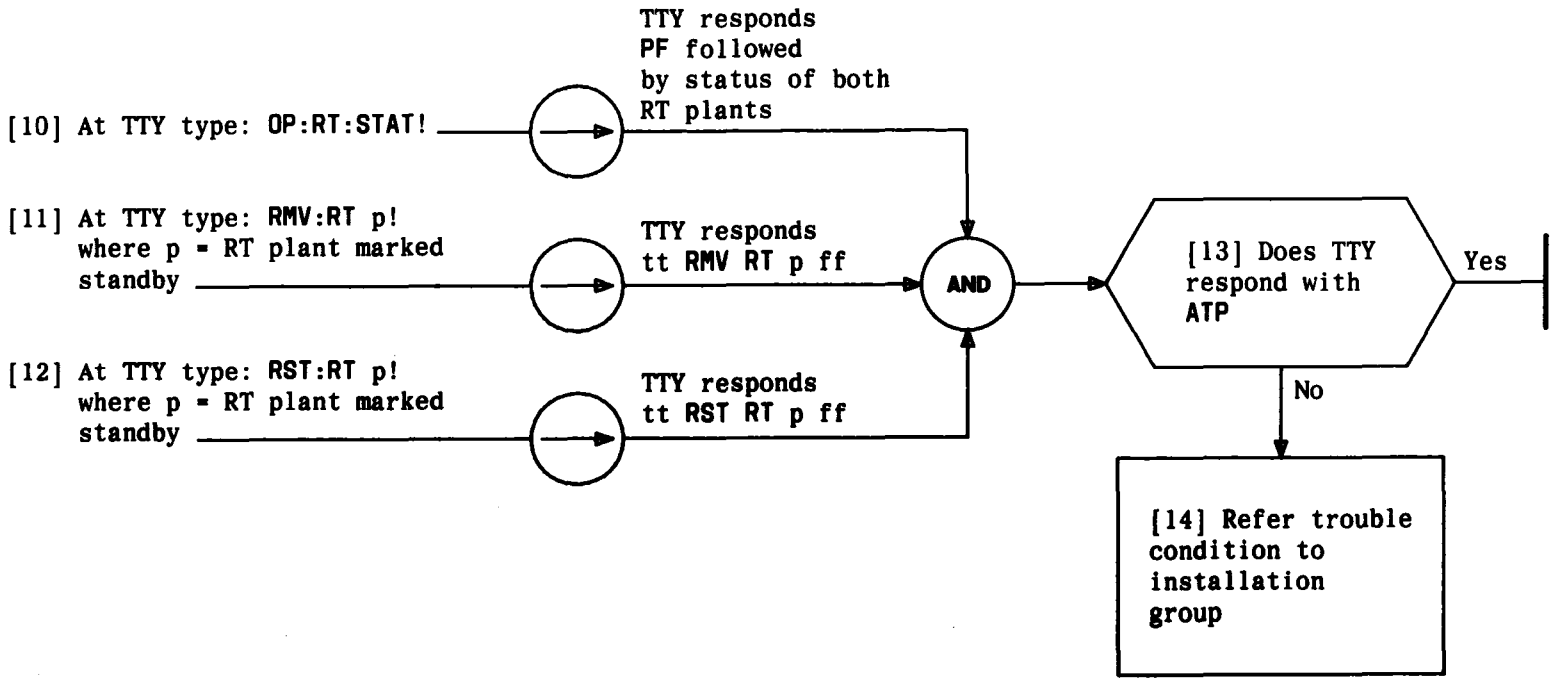

RUN MAJOR CONTROL UNITS DIAGNOSTICS

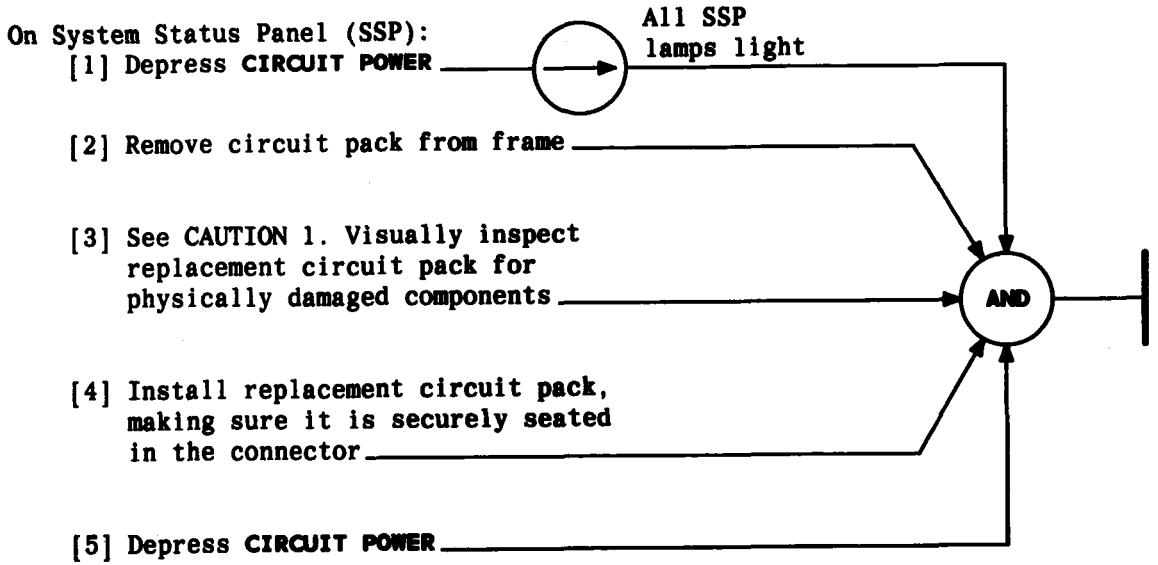

CAUTION 1

Contact contamination may occur unless circuit pack is handled only by the edges

REPLACE CIRCUIT PACK IN MAINTENANCE FRAME

SUMMARY	
This test must be run for a minimum period of 24 consecutive hours at a call volume of at least 500 calls per hour, per network frame (may be waived for offices not equipped with enough service circuits). Investigate and resolve all maintenance TTY printouts that occur during test procedure.	No more than 1 in 10,000 calls should fail to complete during test interval. The number of troubles which indicate a failure to complete shall not exceed 5 in 10,000 calls. If trouble or major alarms disrupt this test, restart test.

TABLE A	
CONDITION	RESULT
Calling Rate	At least 500 calls per hour, per network frame
Failure Rate	1 failure to complete in 10,000 calls
Malfunctions, (does not indicate a failure to complete)	5 in 10,000 Calls

[1] See NOTE 1. Verify that installation group performs this test within two weeks of turnover date

[2] Verify generic program issue is one that office will be cut into service with and that all overwrites have been installed

[3] See NOTE 2. Using Speed Call 8 load boxes, maintain a call volume of at least 500 calls per hour, per network frame for a minimum of 2 hours

[4] Verify that test is run for 24 consecutive hours without major alarm or trouble causing interruption

[5] Investigate and resolve all Maintenance TTY printouts for test period and compare results to TABLE A

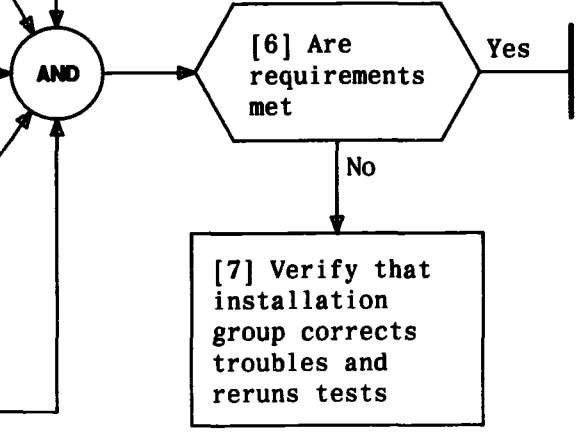

NOTES

1. The system should be in a trouble-free state before starting this test. If trouble or major alarm disrupts test, then test must be restarted
2. The call volume of 500 calls per hour, per network frame, may be reduced if office is not equipped with enough service circuits to handle the 500 call rate

OBSERVE PROCEDURES AND RESULTS OF INTEGRATED VOLUME TESTS

On SSP:

[1] Verify **SYSTEM NORMAL** lamp on

[2] Remove cartridge tape transport unit 1 (minirecorder) from service [DLP-684]

[3] Perform tape diagnostics on tape 1 [DLP-685]

[4] Remove cartridge tape transport unit 0 (minirecorder) from service [DLP-684]

[5] Perform tape diagnostics on tape 0 [DLP-685]

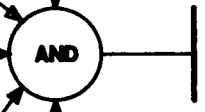

RUN DIAGNOSTICS ON TAPE DATA CONTROL UNITS 0 AND 1

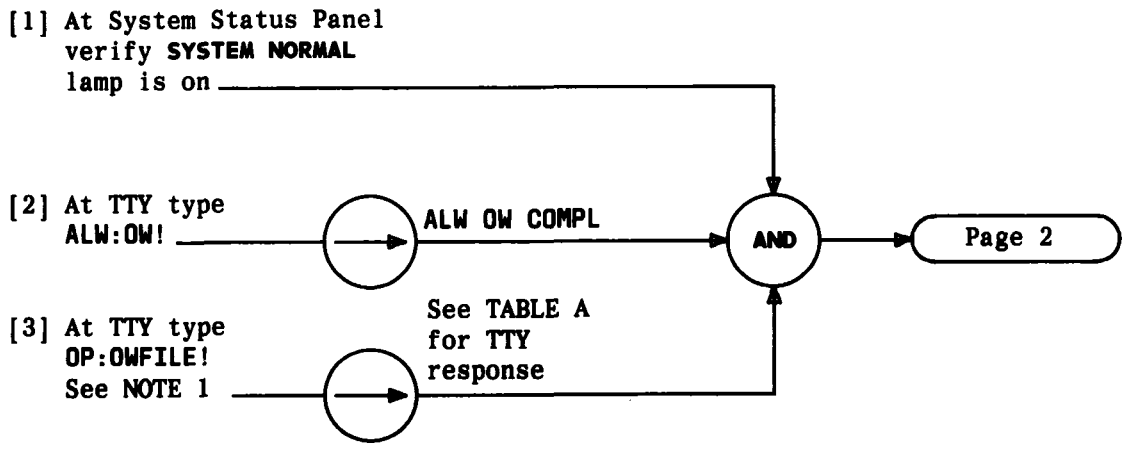

TABLE A

SO-2 Generic Response
++ OP OWFILE
GENID xxxxxxxx
ISSID zzzzzzzz
OW nnnnn s mmdd yyhh nnss
•
•
•
OW nnnnn s mmdd yyhh nnss
OP OWFILE COMPL
Or for 3E3
And later Generic Response
++ OP OWFILE aa
GENID xxxxxxxx
ISSID zzzzzzzz
OW nnnnn s mmdd yyhh type
•
•
•
OW nnnnn s mmdd yyhh type
CURR cur LENGTH len
OP OWFILE COMPL
Where: (for both generics)
nnnnn = overwrite number
s = overwrite status
0 = inactive
1 = active
3 = dead

NOTE 1
It may take up to 10 minutes to obtain TTY printout

CHECK PATCH STATUS

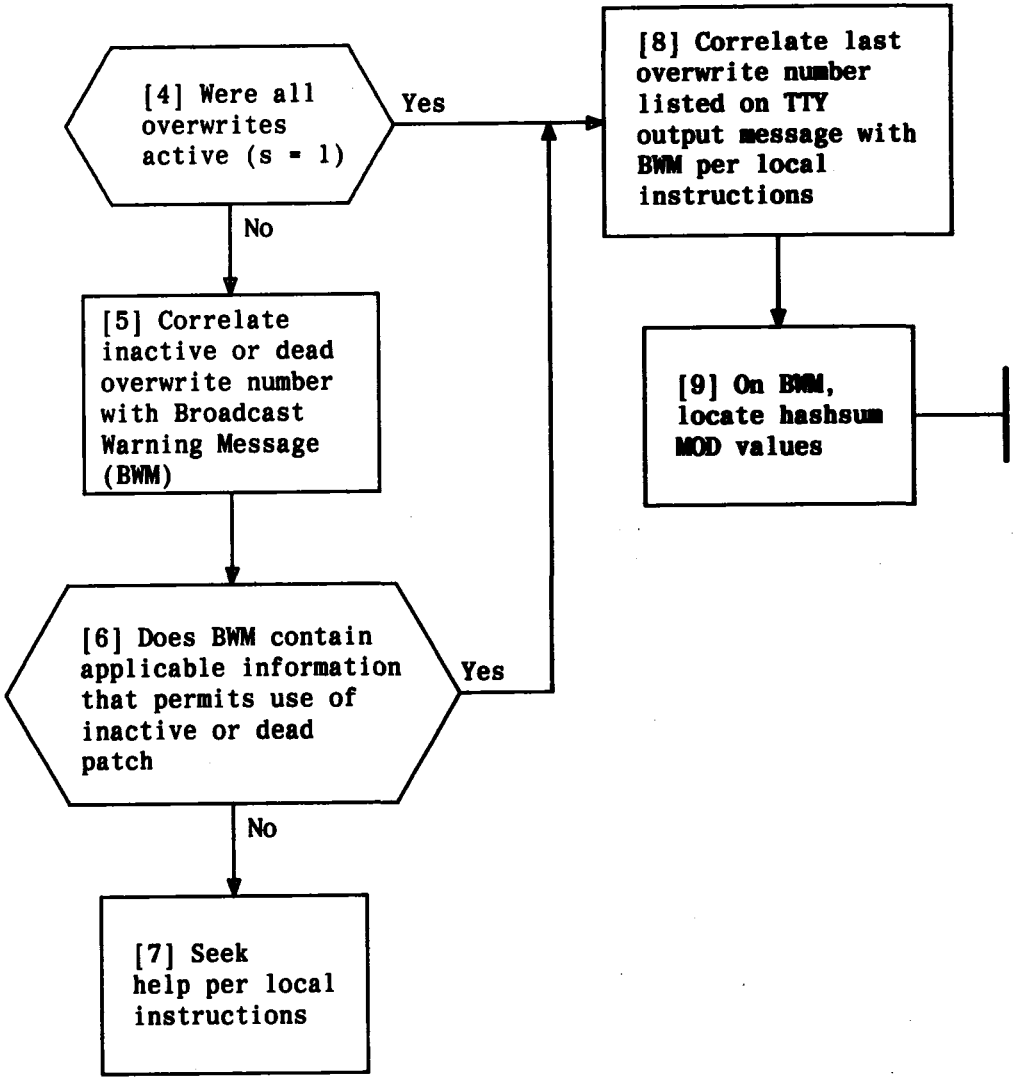

CHECK PATCH STATUS

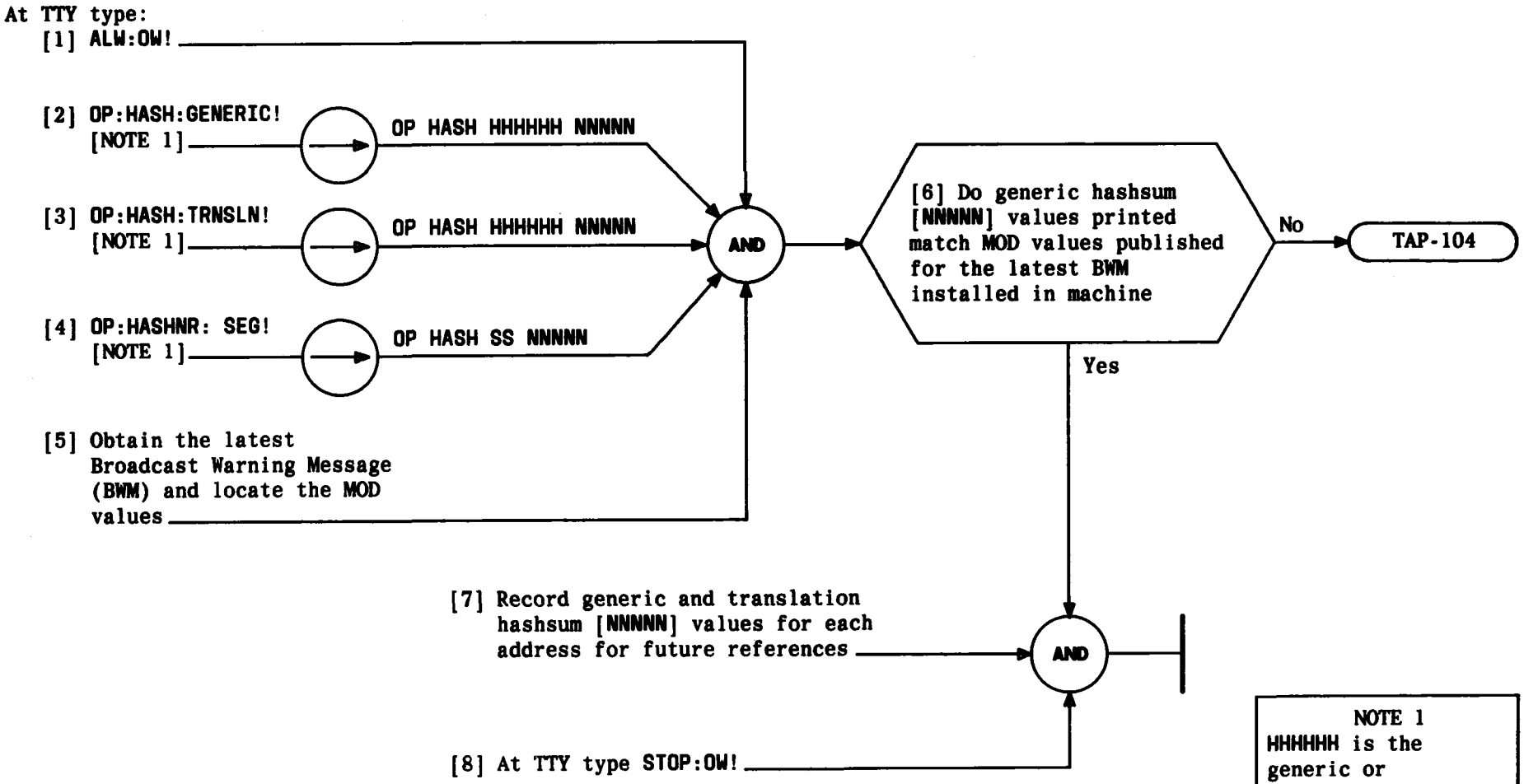

NOTE 1
HHHHHH is the generic or translation hashsum address
NNNNN is the generic or translation hashsum value in decimal
SS is SEG number

Issue 3	AUG 1984
233-142-100	DLP
PAGE 1 of 1	549

VERIFY HASHSUM VALUES USING BROADCAST WARNING MESSAGE FOR OFFICES WITH 3E3 GENERIC OR LATER

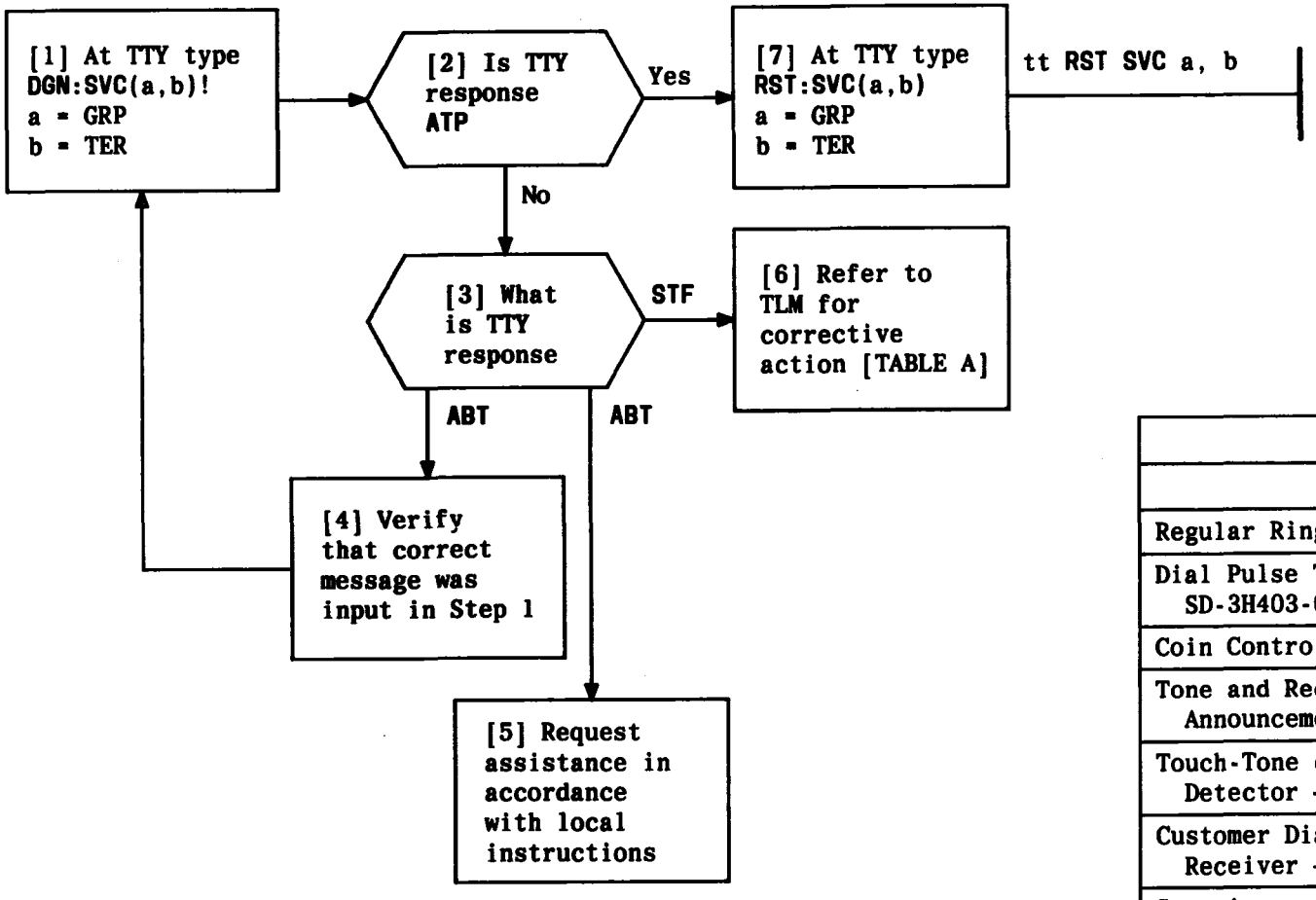

TABLE A	
CIRCUIT	TLM
Regular Ringing – SD-3H410-01	TLM 3H110-01
Dial Pulse Transmitter – SD-3H403-01	TLM 3H110-01
Coin Control – SD-3H411-01	TLM 3H110-01
Tone and Recorded Announcement – SD-3H110-01	TLM 3H110-01
Touch-Tone calling Detector – SD-3H401-01	TLM 3H111-01
Customer Dial Pulse Receiver – SD-3H410-01	TLM 3H111-01
Superimposed Ringing – SD-3H406-01	TLM 3H112-01
Multifrequency Receiver – SD-3H402-01	TLM 3H113-01
Multifrequency Transmitter – SD-3H404-01	TLM 3H114-01

PUT SERVICE CIRCUIT INTO SERVICE

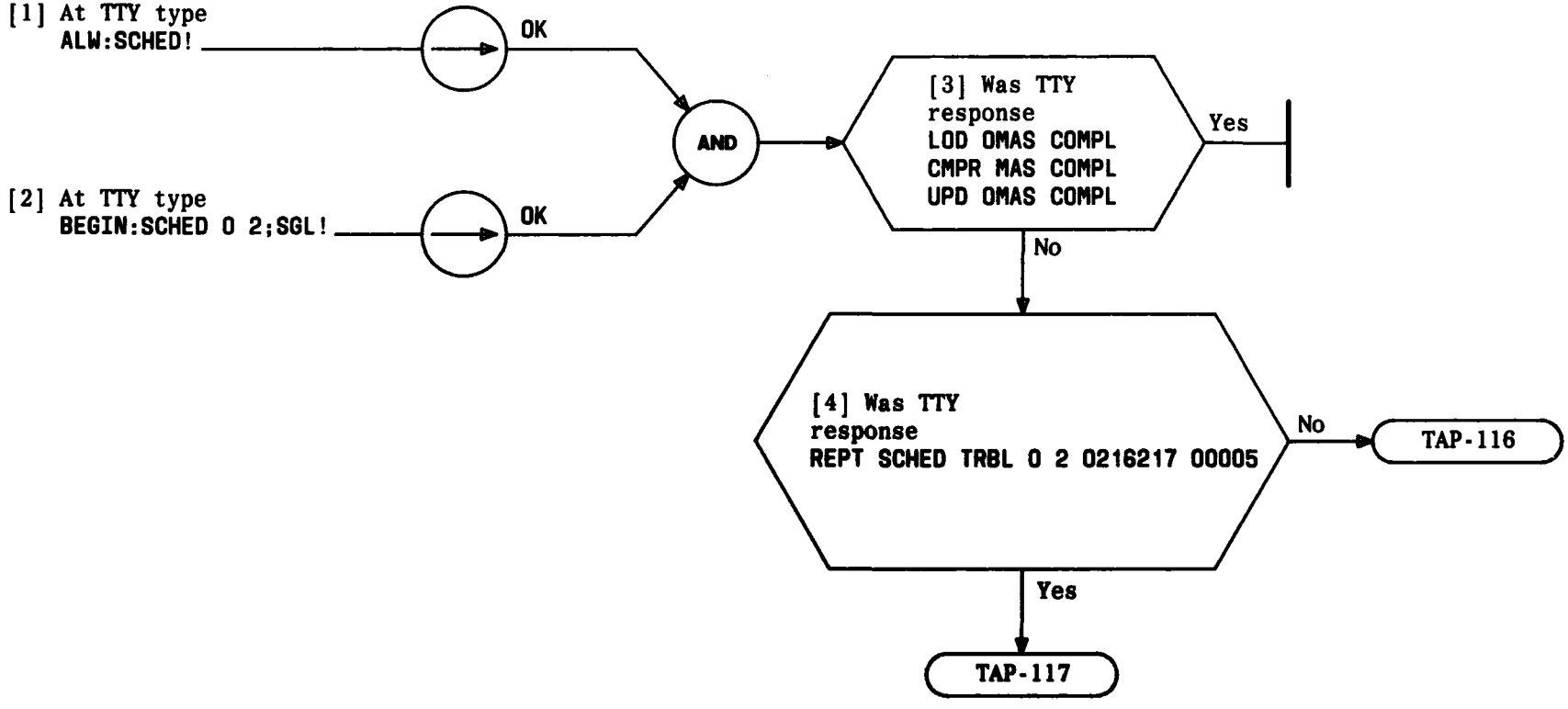

PERFORM OFF-LINE BOOTSTRAP FOR OFFICES WITH 3E3 GENERIC OR LATER

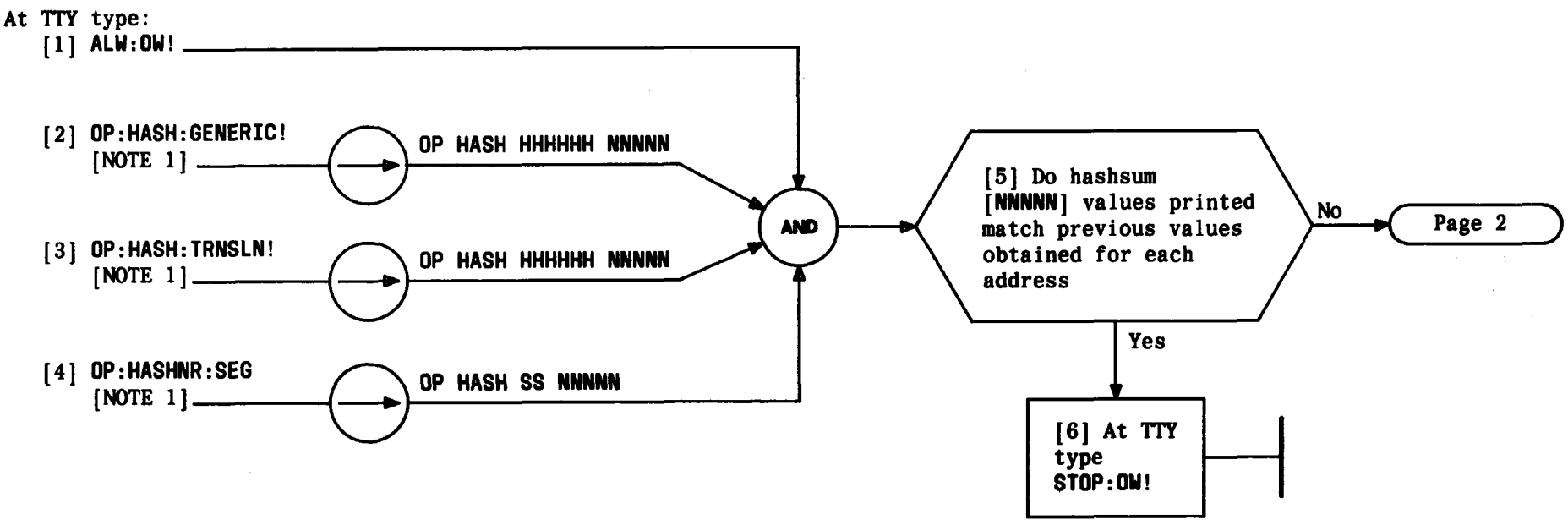

NOTE 1

HHHHHH is the generic or translation hashsum address

NNNNN is the generic or translation hashsum value in decimal

SS is SEG number

Issue 3	AUG 1984
233-142-100	DLP
PAGE 1 of 2	552

VERIFY HASHSUM VALUES USING PREVIOUS VALUES FOR OFFICES WITH 3E3 GENERIC OR LATER

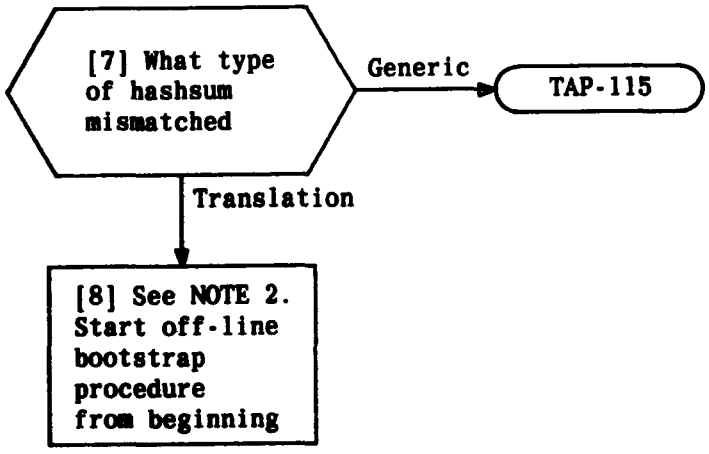

NOTE 2
Mismatch may be due to customer-initiated recent changes (changing call forwarding and/or speed calling list)

VERIFY HASHSUM VALUES USING PREVIOUS VALUES FOR OFFICES WITH 3E3 GENERIC OR LATER

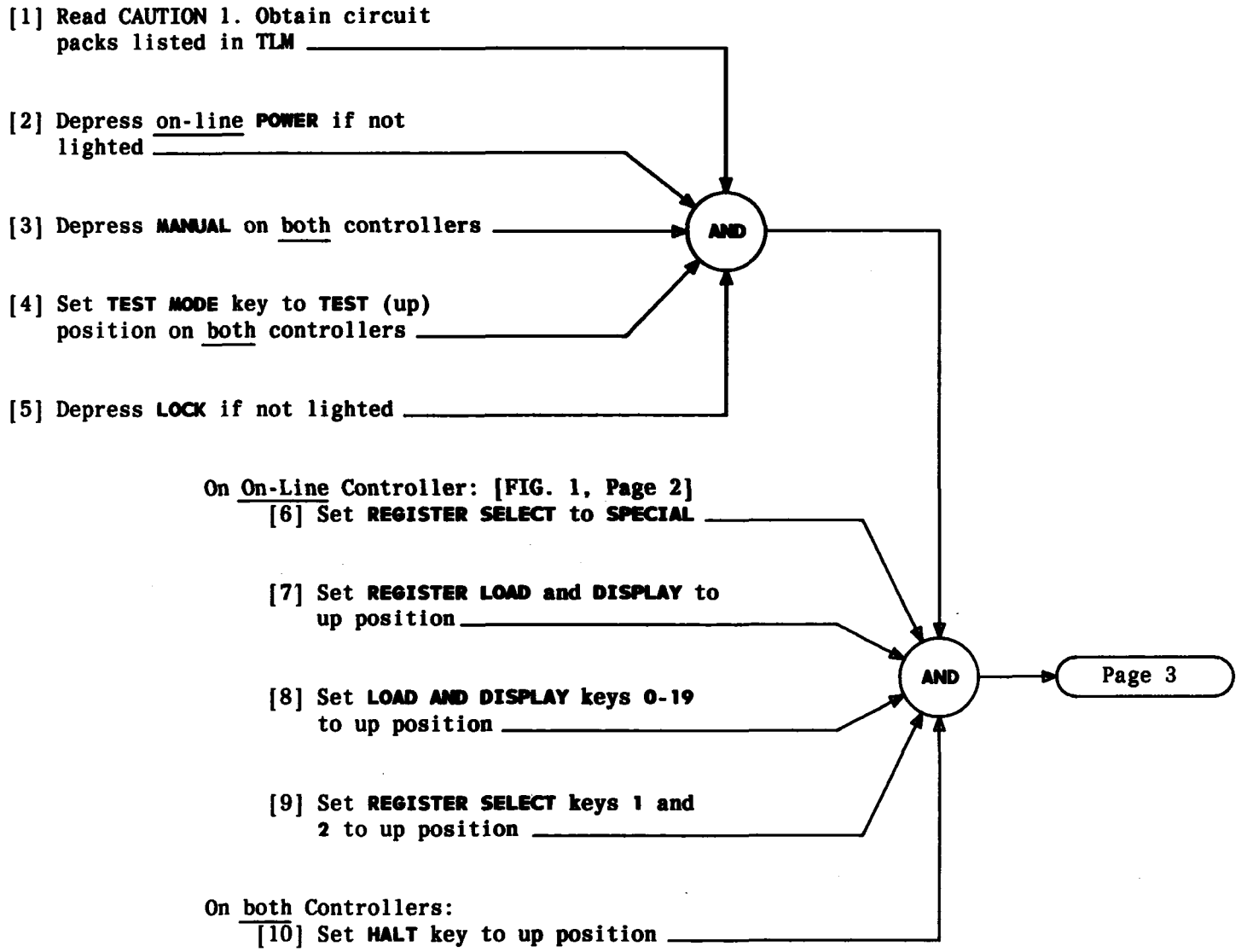

CAUTION 1
On-line circuit packs cannot be replaced without causing a service loss. Replace only during low traffic periods if possible

REPLACE CIRCUIT PACK IN ON-LINE (ACTIVE) CONTROL UNIT

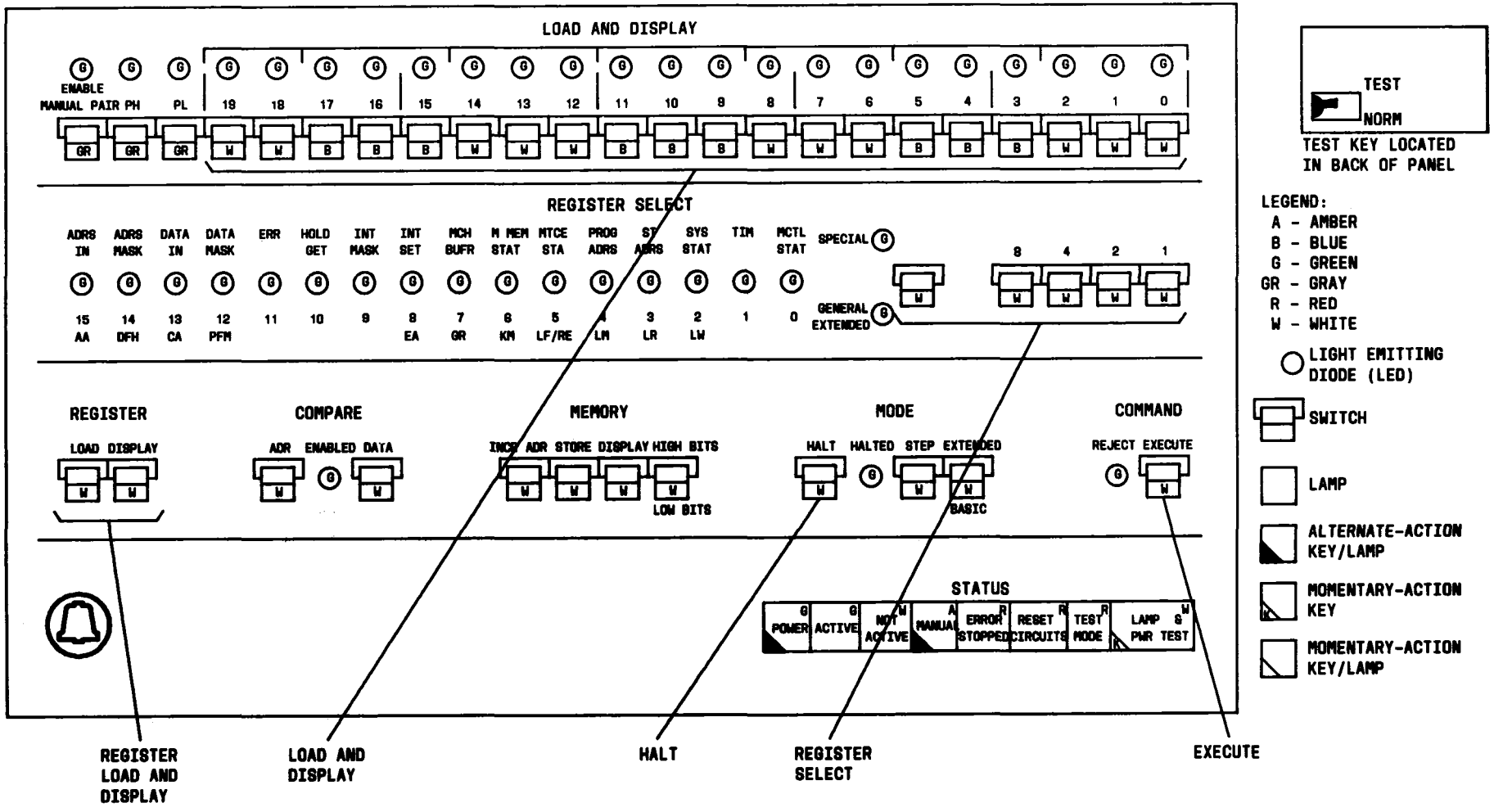

FIG. 1 – 3A CC Control Keys

REPLACE CIRCUIT PACK IN ON-LINE (ACTIVE) CONTROL UNIT

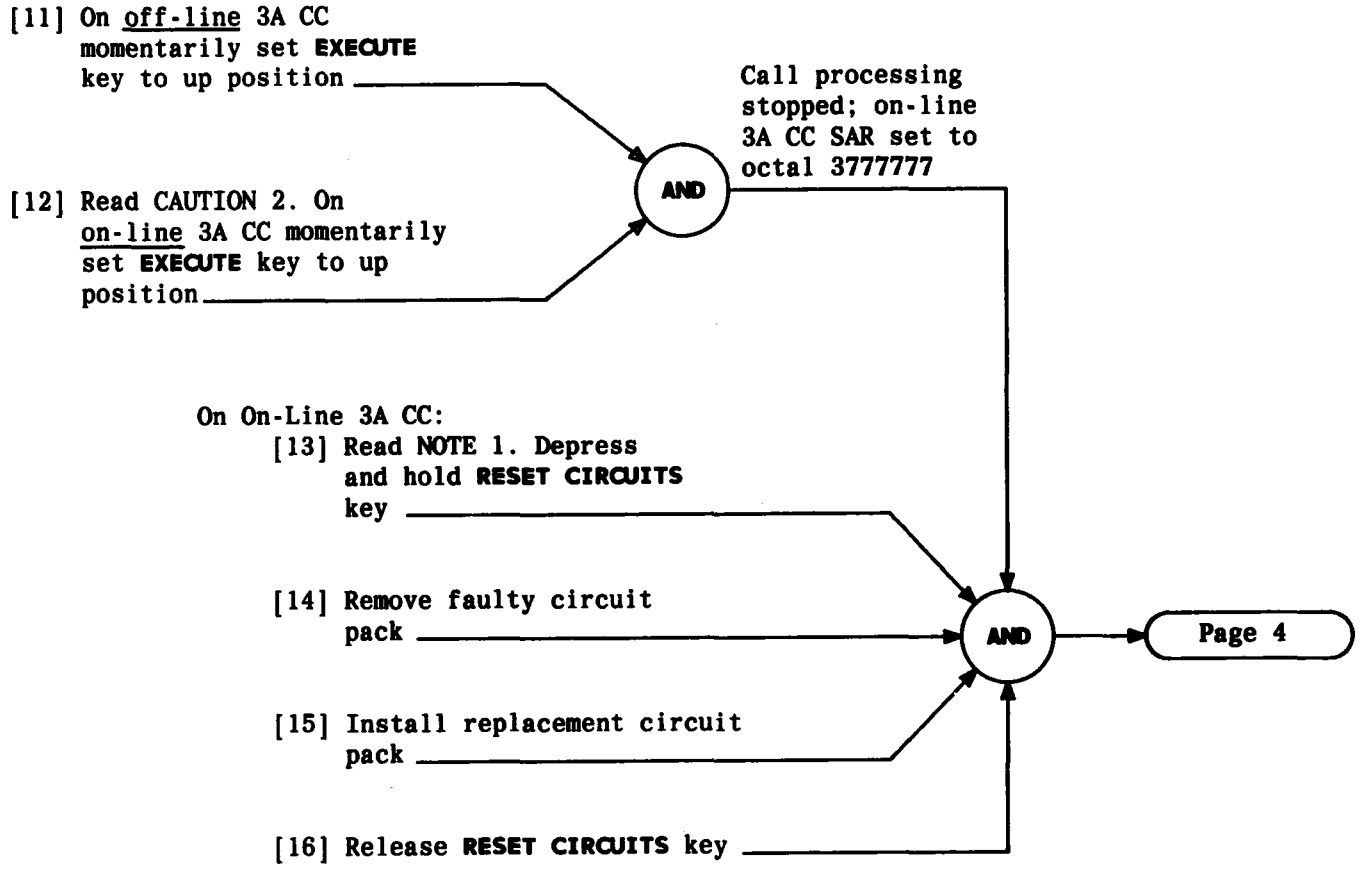

NOTE 1
Power is not removed and **RESET CIRCUITS** key is held while circuit pack is changed

CAUTION 2
This step will stop call processing (PANEL TIMEOUT) for remainder of procedure

REPLACE CIRCUIT PACK IN ON-LINE (ACTIVE) CONTROL UNIT

At both 3A CCs:

[17] Set **HALT** keys to down position

[18] Momentarily set **EXECUTE** keys to up position

[19] Set **TEST MODE** keys to down position

[20] Depress **MANUAL** keys

[21] Set all panel keys to down position

[22] Depress **LOCK**

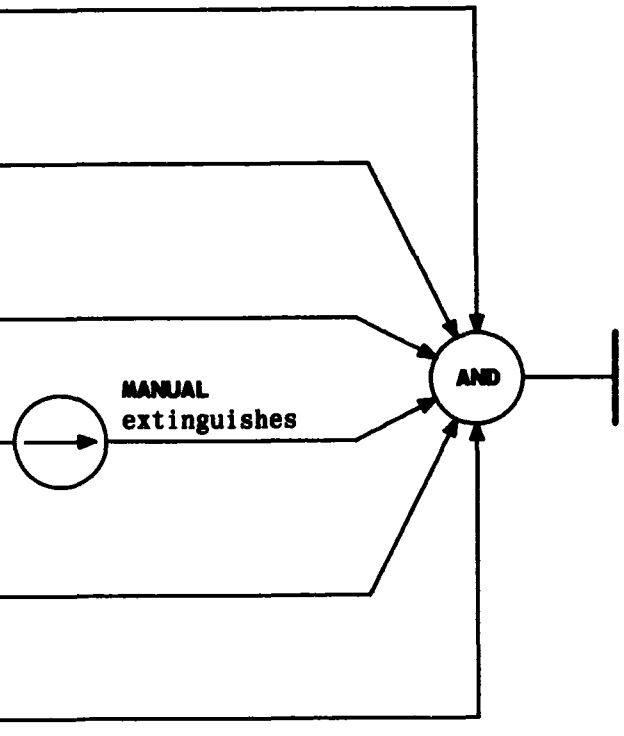

REPLACE CIRCUIT PACK IN ON-LINE (ACTIVE) CONTROL UNIT

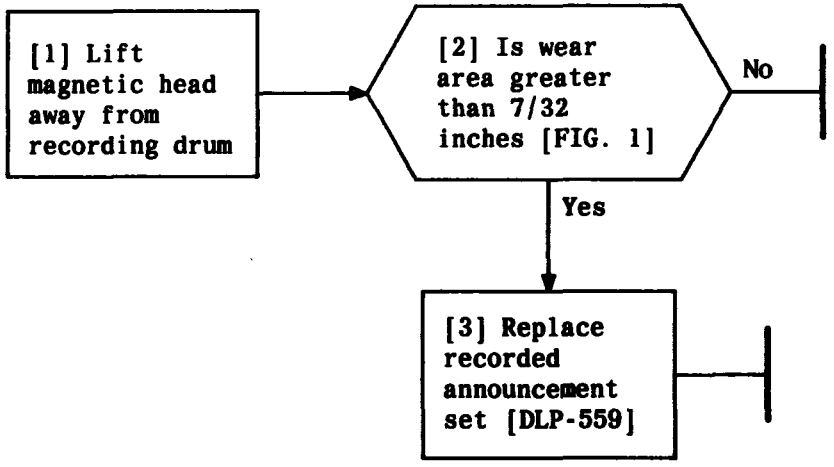

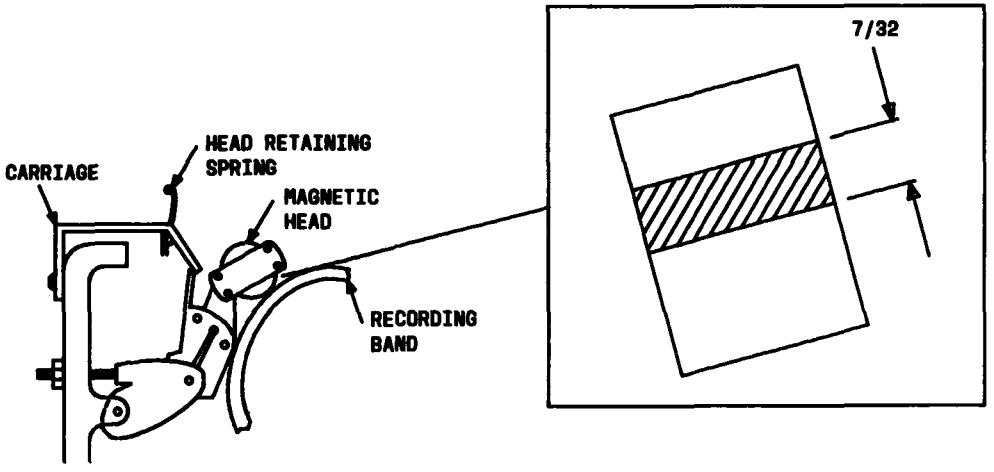

FIG. 1

CHECK MAGNETIC HEAD FOR WEAR

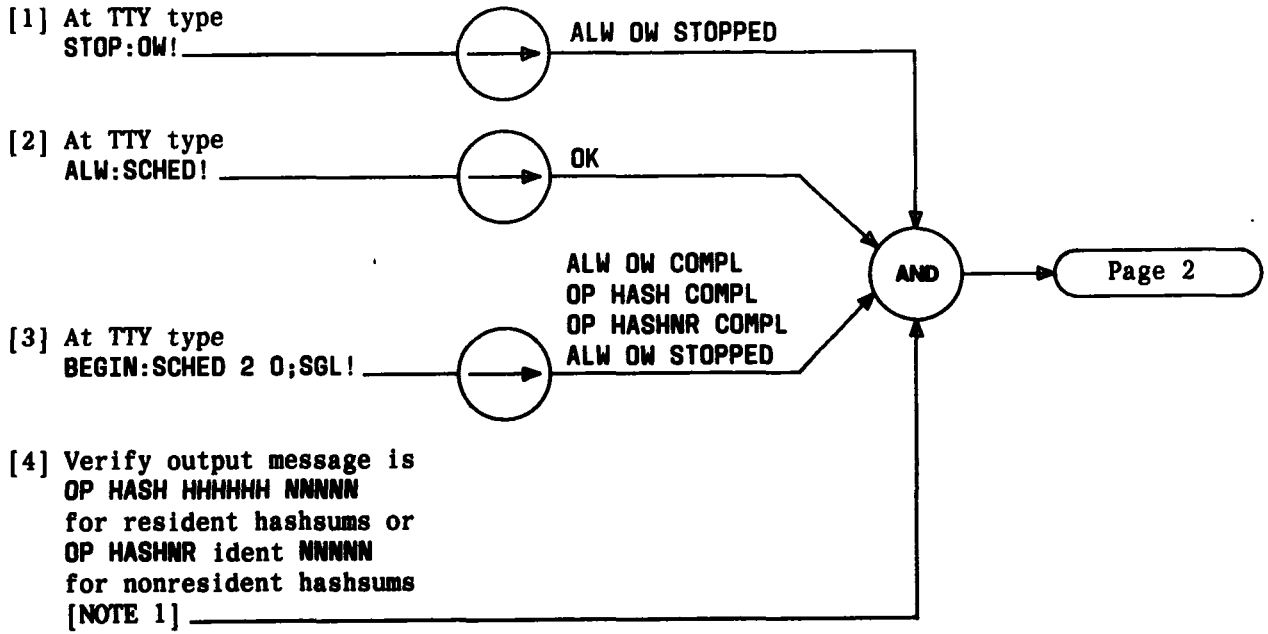

NOTE 1

HHHHHH is the generic or translation hashsum address

NNNNN is the hashsum value in decimal

ident is the segment number or track of the nonresident hashsum

VERIFY ALL HASHSUM VALUES

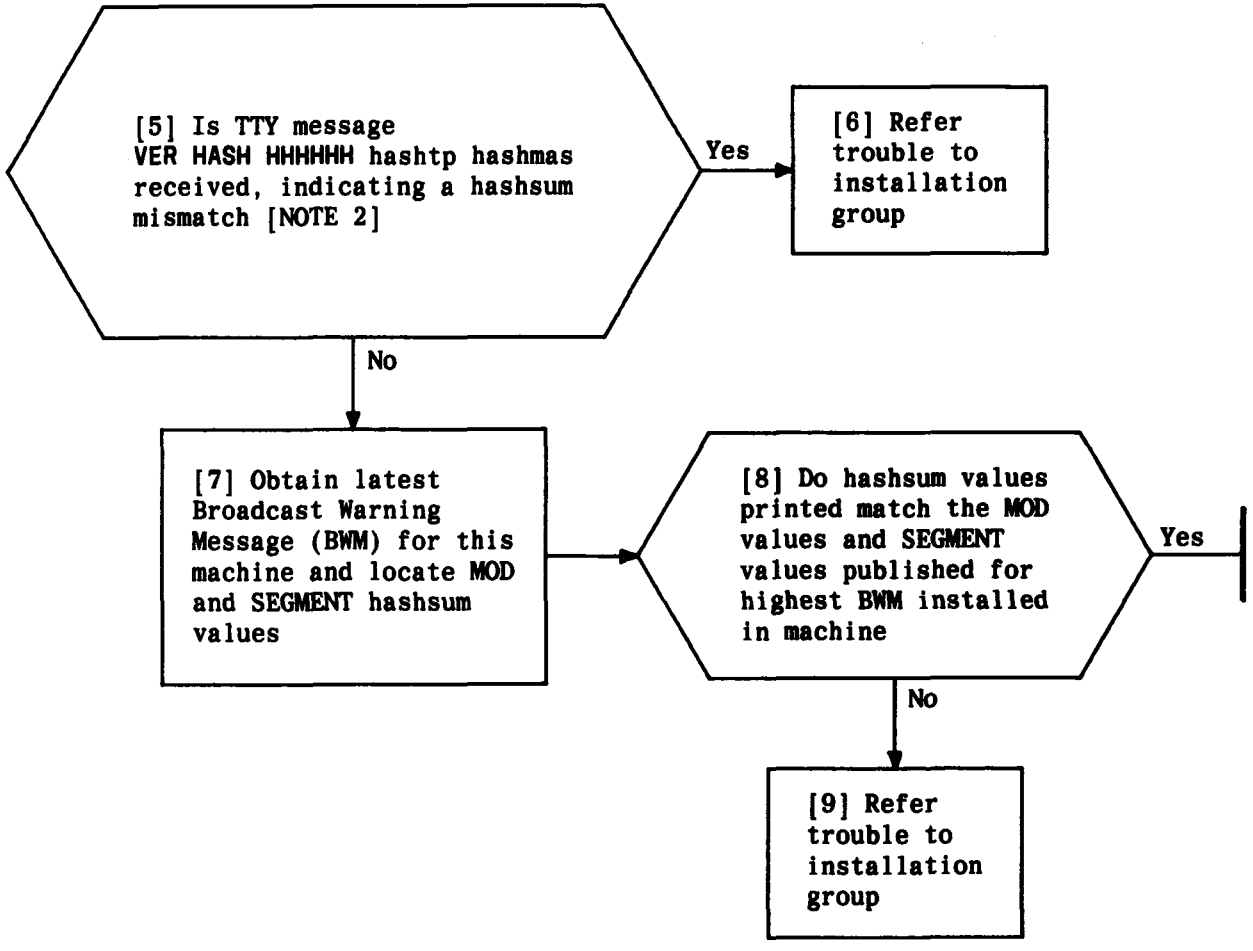

NOTE 2

HHHHHH is the hashsum address

hashtp is the hashsum value stored in the CHECKSUM file

hashmas is the hashsum computed from on-line main store

VERIFY ALL HASHSUM VALUES

[1] At TTY type
RMV:TTYC 1!

[2] Disconnect TTY plug from TTYC 1, port **0** [FIG. 1 and 2]

[3] Connect TTY plug to TTYC 0, port **0** [FIG. 1 and 2]

[4] At System Status Panel, depress **TTY INIT** key

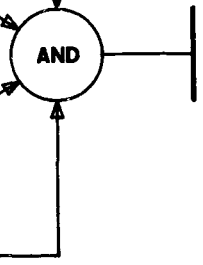

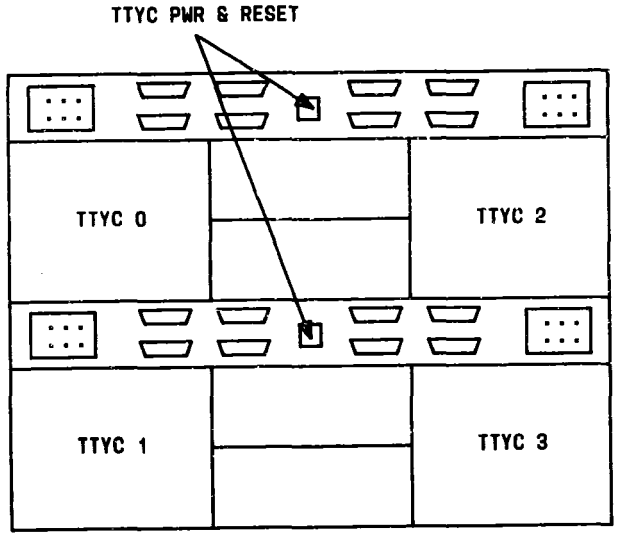

FIG. 1 – Typical TTYC Layout

SWITCH LOCAL TELETYPEWRITER FROM BACKUP TTY CONTROLLER (TTYC 1) TO MAINTENANCE TTY CONTROLLER (TTYC 0) FOR 43A TYPE TTY

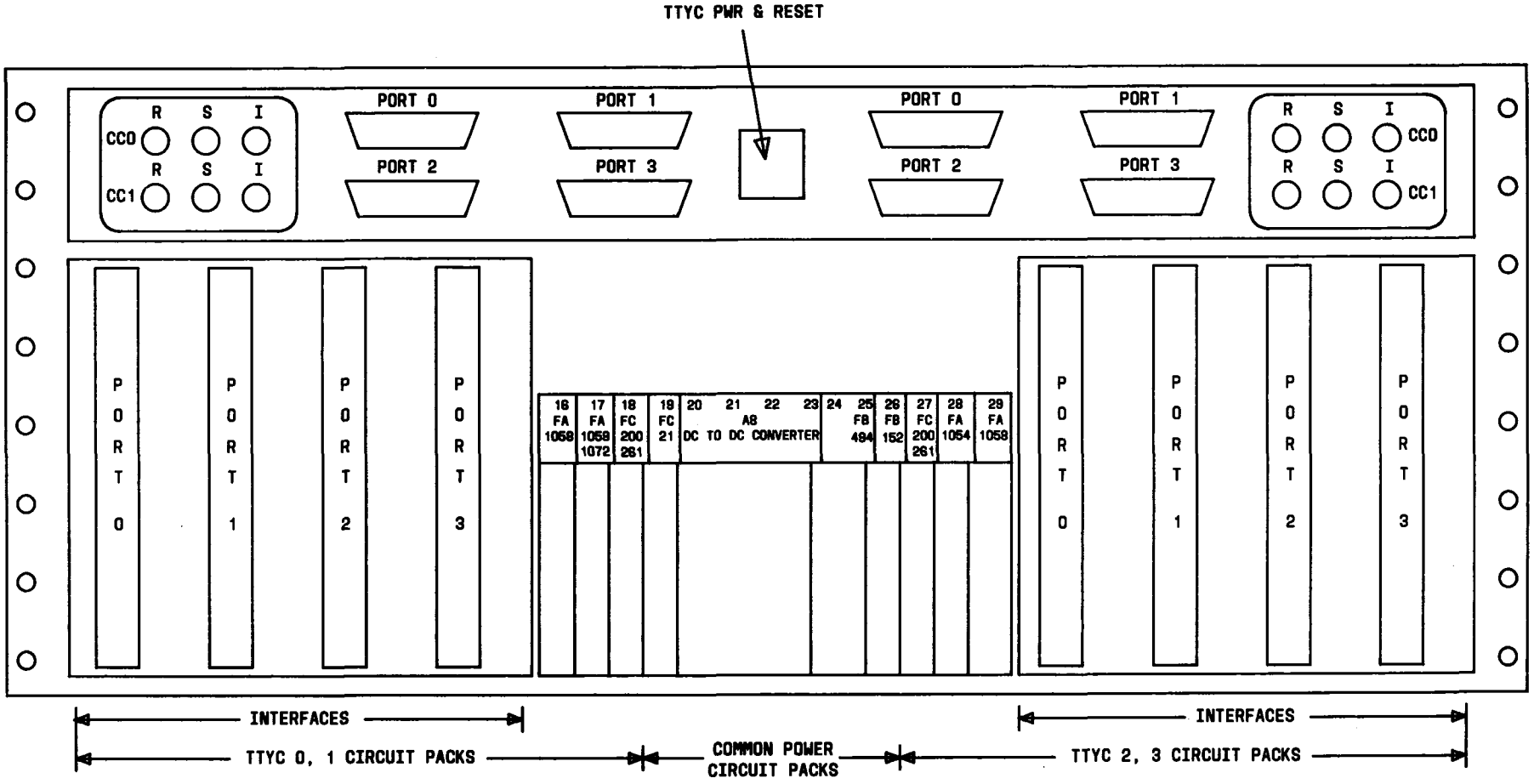

FIG. 2

SWITCH LOCAL TELETYPEWRITER FROM BACKUP TTY CONTROLLER (TTYC 1) TO MAINTENANCE TTY CONTROLLER (TTYC 0) FOR 43A TYPE TTY

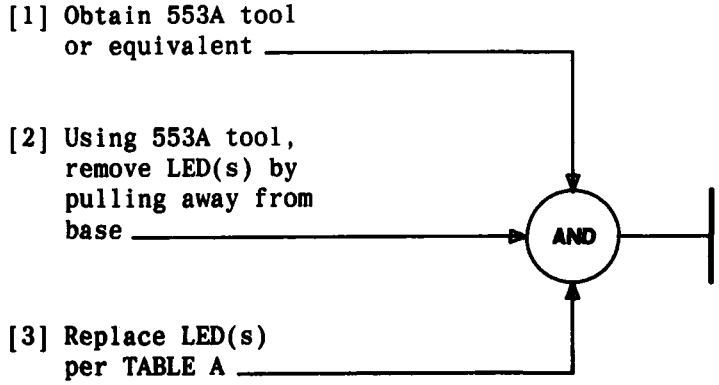

TABLE A	
LED COLOR	TYPE
Green	534E
Amber	534F
Red	534D

REPLACE LIGHT EMITTING DIODE (LED)

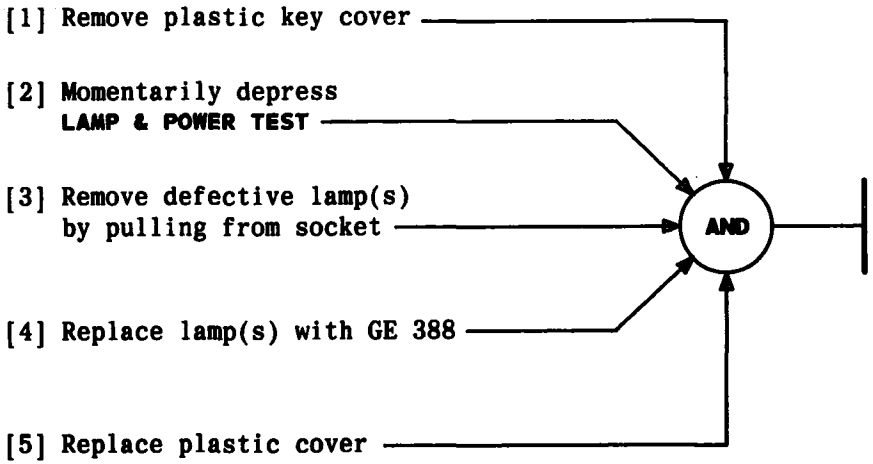

REPLACE SSP LAMP

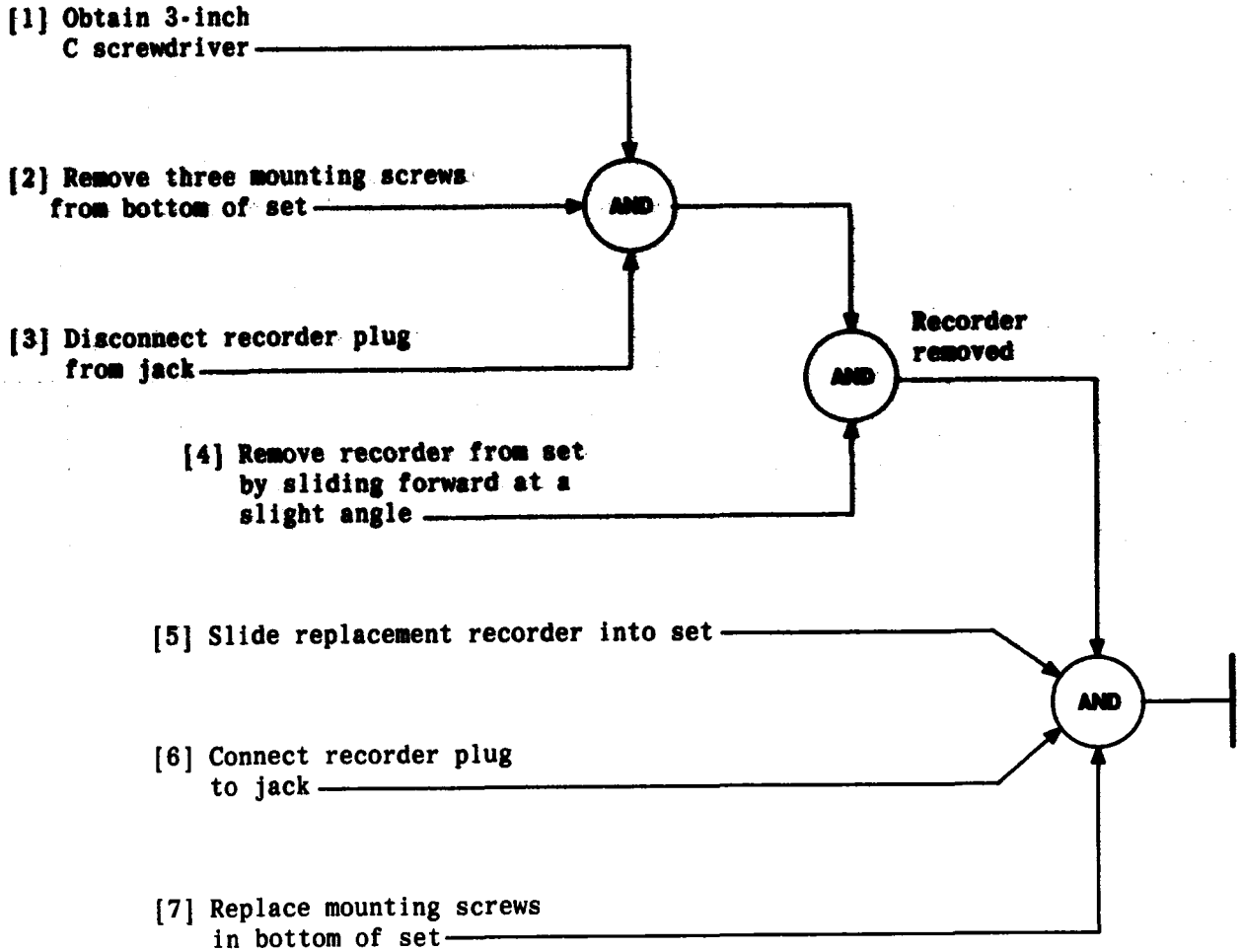

REPLACE RECORDED ANNOUNCEMENT SET

[1] Pivot magnetic head away from band and lock against carriage with head-retaining spring [FIG. 1]

[2] Remove flat drive belt from drum pulley

[3] Moisten cloth with cleaner

[4] See CAUTION 1. Clean surface of magnetic head and recording band (the drum may be rotated to facilitate cleaning)

[5] Using clean cloth, rub magnetic head and recording band until surface is dry and polished

AND

Recording area is clean

[6] Wipe dust and/or cleaner from other parts of mechanism with dry cloth [FIG. 2]

[7] Return flat drive belt to drum pulley

AND

[8] Release head lock and return magnetic head to position against recording drum

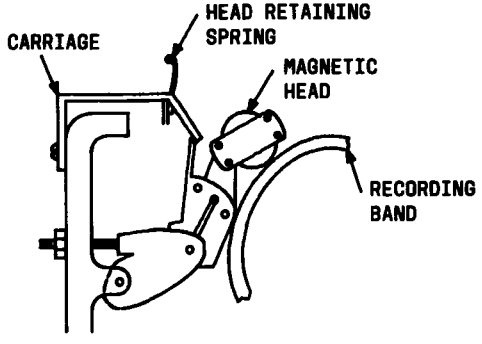

FIG. 1

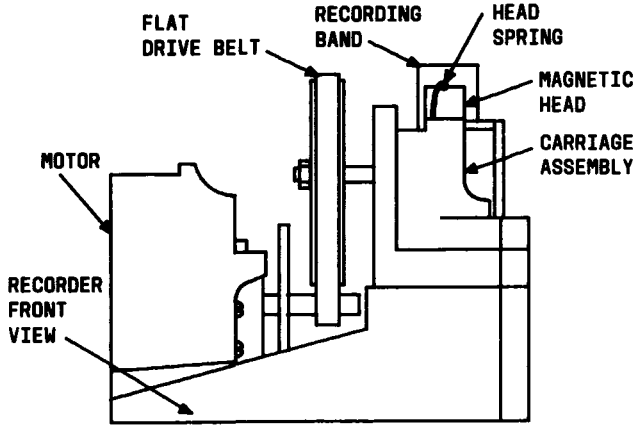

FIG. 2

CAUTION 1
Equipment damage may occur if cleaner gets on any part other than the part being cleaned

Issue 3	AUG 1984
233-142-100	DLP
PAGE 1 of 1	560

CLEAN THE RECORDED ANNOUNCEMENT SET

[1] If lubricant comes in contact with recording head or drum, reclean per DLP-560

[2] If oil reservoirs are provided, apply two drops of L1 oil via 486A can to each oil reservoir [FIG. 1]

[3] Apply film of oil, using KS-14164 brush and L1 oil, to threads of feed screw and half-nut

[4] Apply film of oil to all gear teeth

[5] Remove any excess oil with KS-2423 cloth

AND

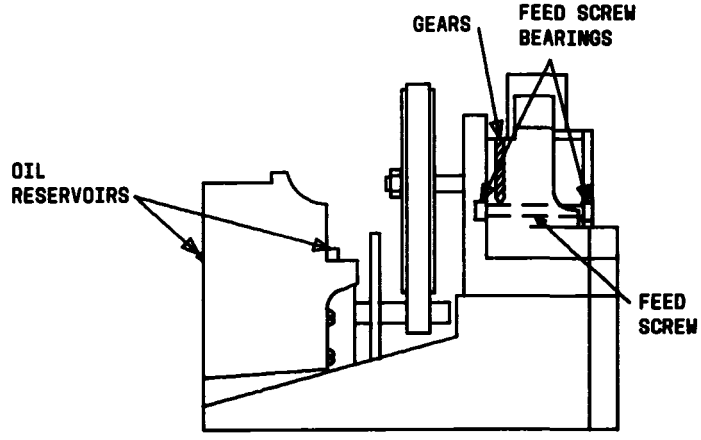

FIG. 1 – L3 Recorder (Front View)

LUBRICATE RECORDED ANNOUNCEMENT SET

[1] Check that belt is not nicked, cracked, or worn

[2] Check that belt is free of grease and oil

[3] Check that drive belt is in center of drum pulley (within 1/16 inch from each side)

[4] Check that belt does not ride on flanges of idler pulley

[5] Rotate drum pulley and watch for belt slippage

AND

[6] Does drive belt appear to be in normal working order

Yes

No

[7] Replace drive belt and repeat Steps 1 thru 5

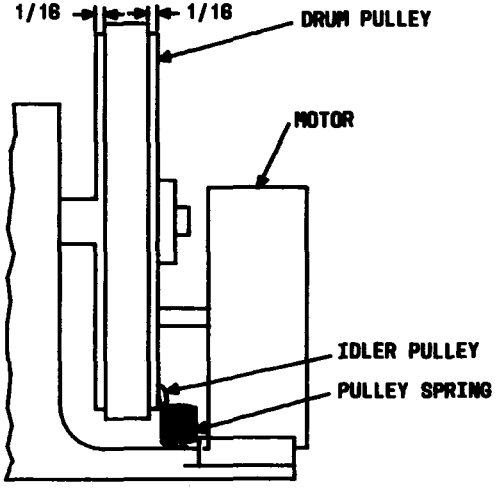

FIG. 1 – L3 Recorder (Rear View)

Issue 3	AUG 1984
233-142-100	DLP
PAGE 1 of 1	562

CHECK DRIVE BELTS

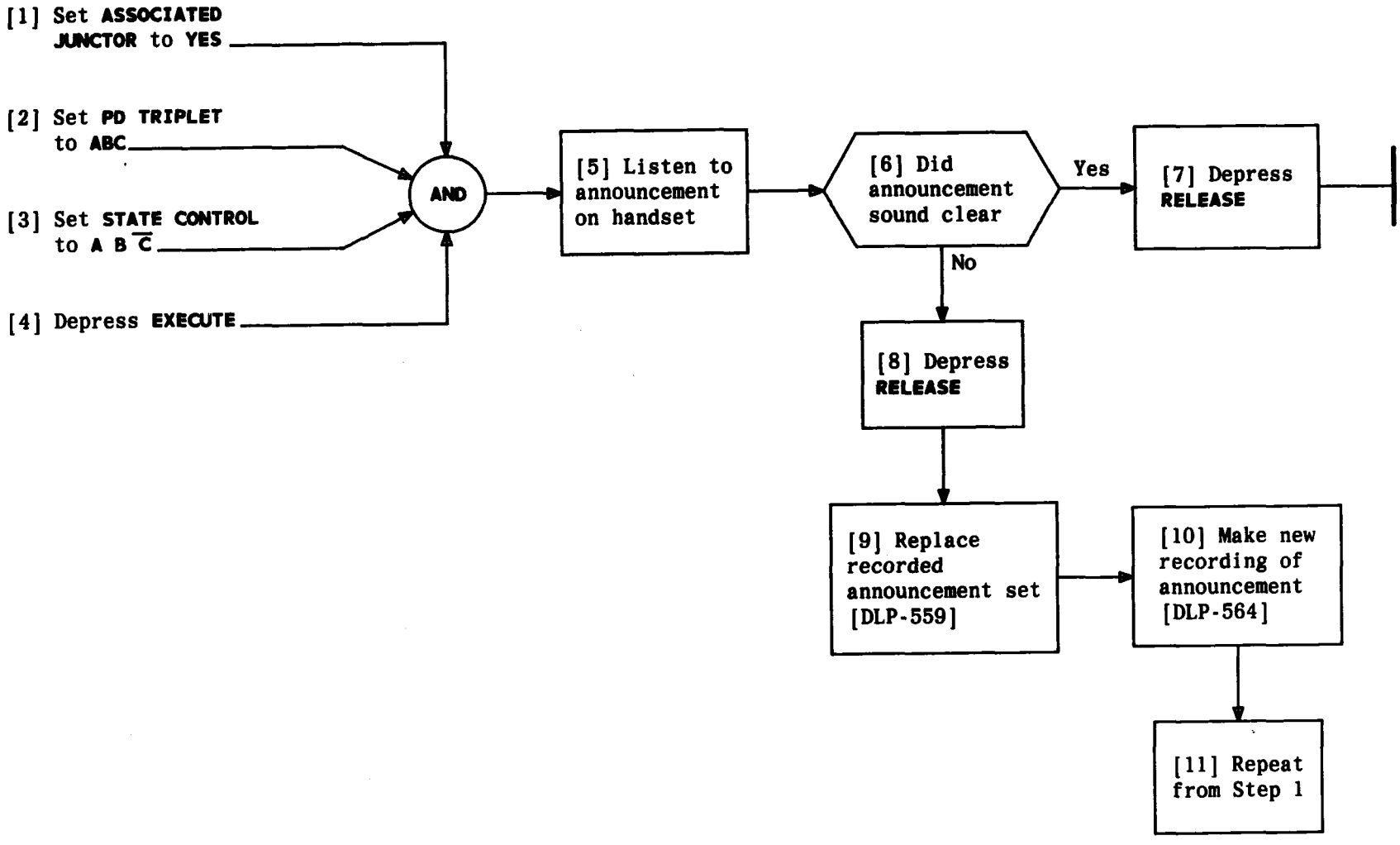

CHECK RECORDED ANNOUNCEMENT SET FOR CLARITY

[1] At announcement set jacks **J3** and **J4**, install 52-type telephone head set

[2] Set **CHECK-DICTATE** to **DICTATE** — lamp **D** lighted

[3] Speak in new announcement

[4] Restore **CHECK-DICTATE** — lamp **D** extinguished

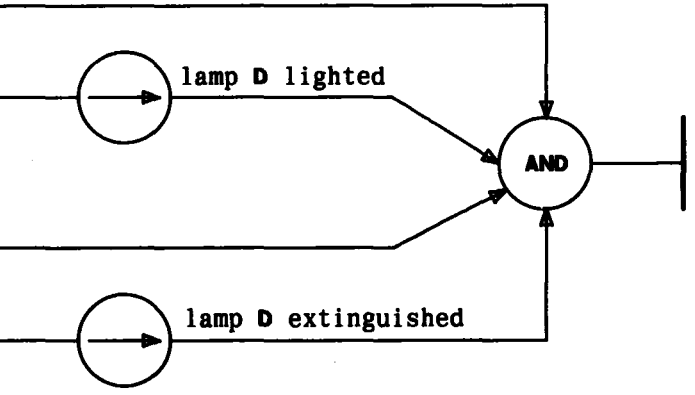

MAKE NEW RECORDING OF ANNOUNCEMENT AT 7A ANNOUNCEMENT SET

SUMMARY

If more than two nights are required for automatic system diagnostics to test trunks, junctors, and service circuits, the **RC:OFFICE** message must be input to change the testing rate. Observe the nightly routine printouts to verify if every circuit installed (CU, TAPE, FIOC, SC, NWC, PPD, RT, test circuits, service circuits, and junctors) that is not service-busy has successfully passed diagnostics. The results should indicate ATP (All Tests Pass) on each circuit tested.

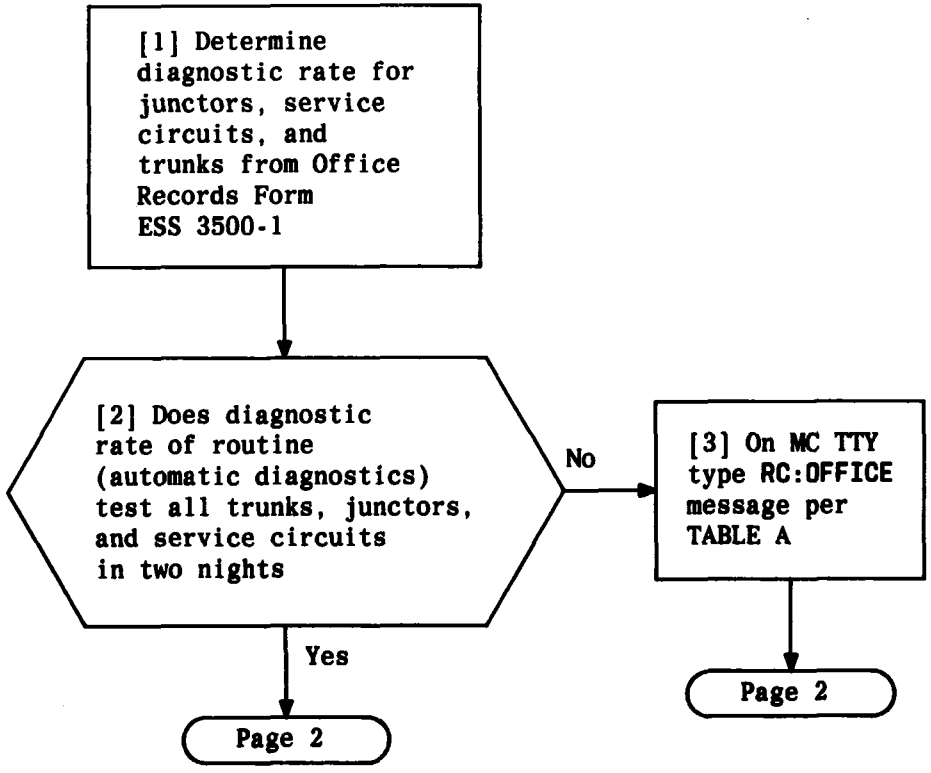

TABLE A

MESSAGE	VARIABLE FIELD
RC:OFFICE/ JC n/ SVC n/ TRK n/ END!	n = A 1-digit number (1 through 5) that specifies the testing rate of circuit diagnostics

CHECK NIGHTLY ROUTINE TEST RESULTS

[4] Using TTY printouts of nightly routine and Form ESS 3201-1, verify that all service groups have been tested

[5] See NOTE 1. Using at least two days TTY printouts, verify that messages in TABLES B and C were received

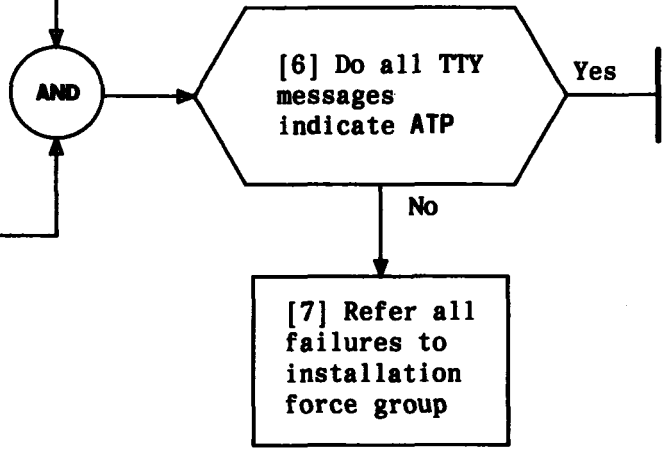

TABLE B
DGN CU a COMPL ATP
DGN TAPE a ATP
DGN FIOC a ATP
DGN SC a ATP
DGN NWC a ATP
DGN PPD a ATP
DGN RT a ATP
DGN SVC g n ATP
DGN TRUNK g b ATP
DGN JC f n ATP
DGN TV TC n ATP
a = side 0 or 1
b = member number
n = number of circuit
g = group number
f = network frame number

TABLE C
OP: DATA COMPL
SOFWARE MESSAGE REGISTERS
EX NW COMPL ATP
OP HASH COMPL
AUDIT TAPE MATCH 0
TST LINE COMPL

NOTE 1
Diagnostics will be run on side 0 one night and on side 1 on alternate nights. A minimum of two nights diagnostics will be required for checking results. Tests on service group for test circuits will be run every night

CHECK NIGHTLY ROUTINE TEST RESULTS

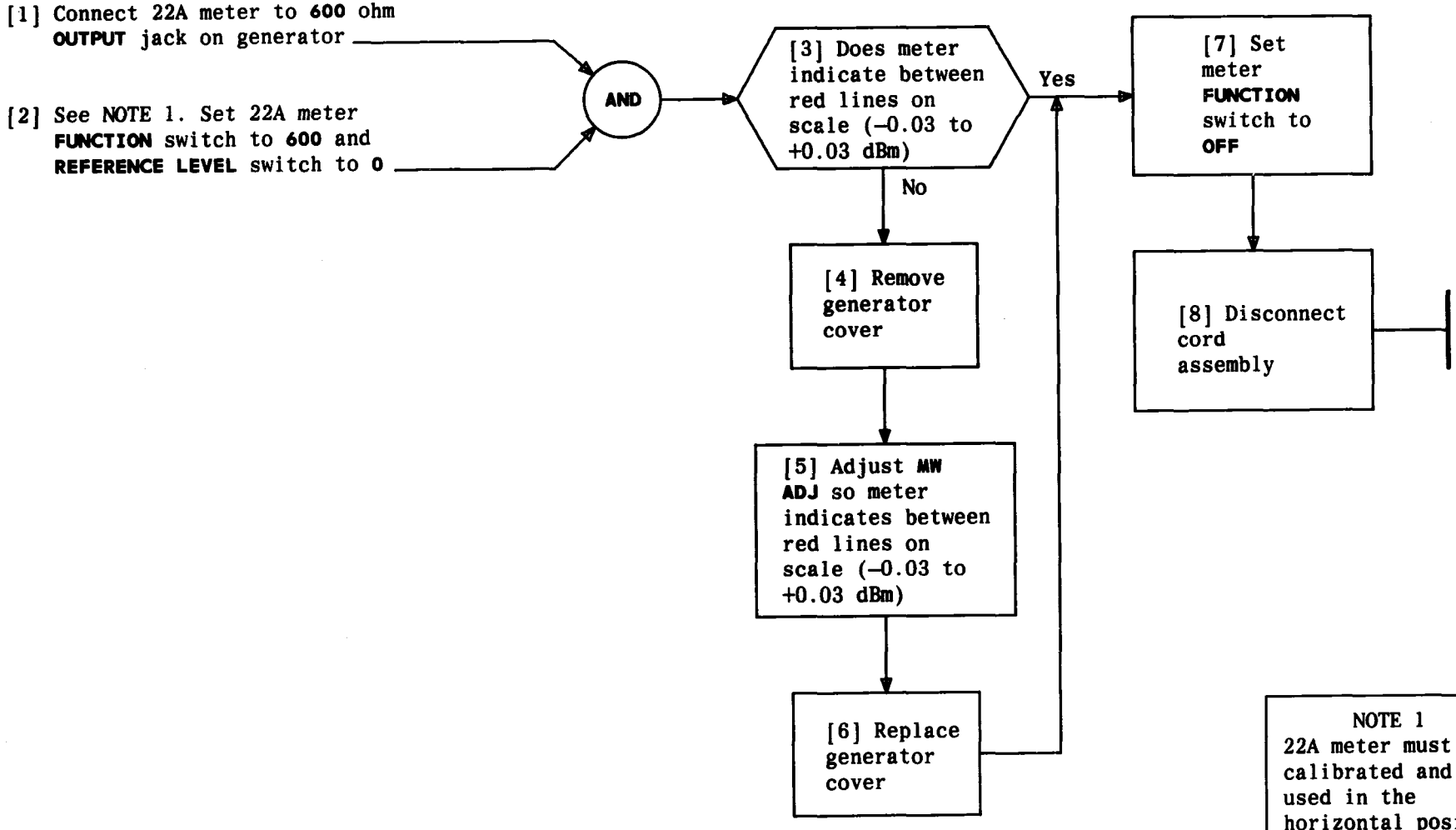

NOTE 1
22A meter must be calibrated and used in the horizontal position. It must be calibrated every 15 minutes while in use

Issue 3	AUG 1984
233-142-100	DLP
PAGE 1 of 1	566

CALIBRATE MILLIWATT REFERENCE GENERATOR

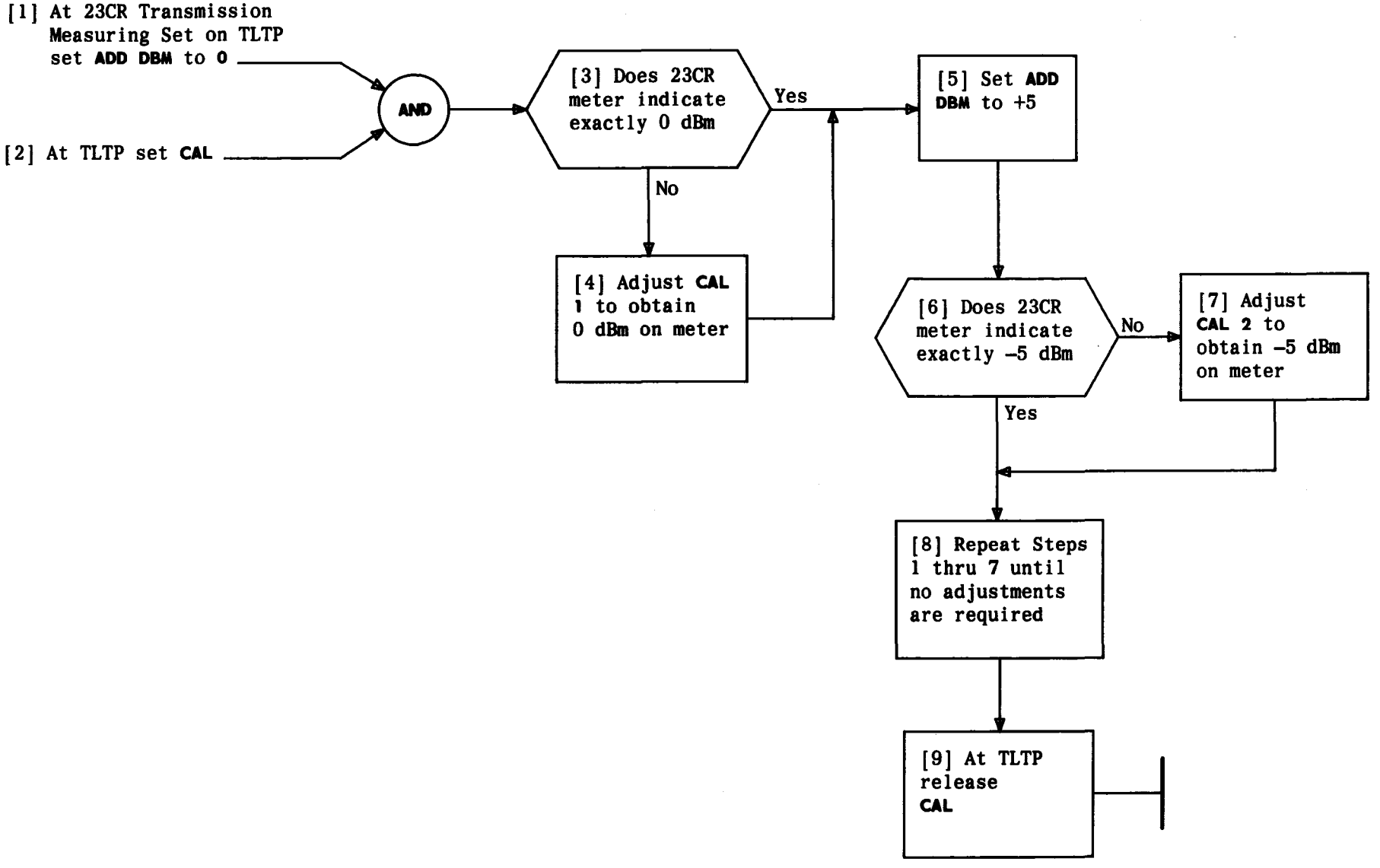

Issue 3	AUG 1984
233-142-100	DLP
PAGE 1 of 1	567

CALIBRATE 23CR TRANSMISSION MEASURING SET

SUMMARY

Send 1000 Hz at **0 DBM** and have distant office measure level and adjust if necessary. With the distant office sending 1000 Hz, use a **23-type TMS** to measure the level. The level should be adjusted to within 0.5 dB of the Expected Measured Loss (EML) specified on the circuit layout card.

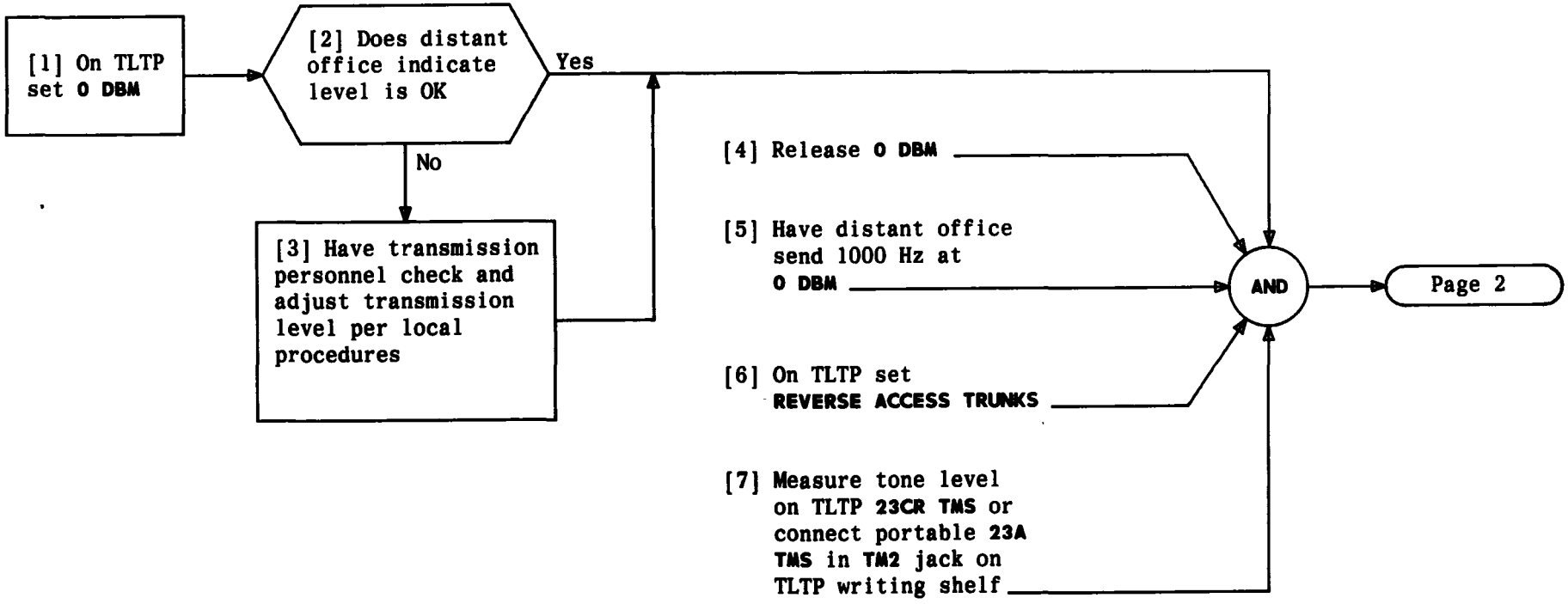

MEASURE 1000 HZ TRANSMISSION LEVELS (CIRCUIT NET LOSS)

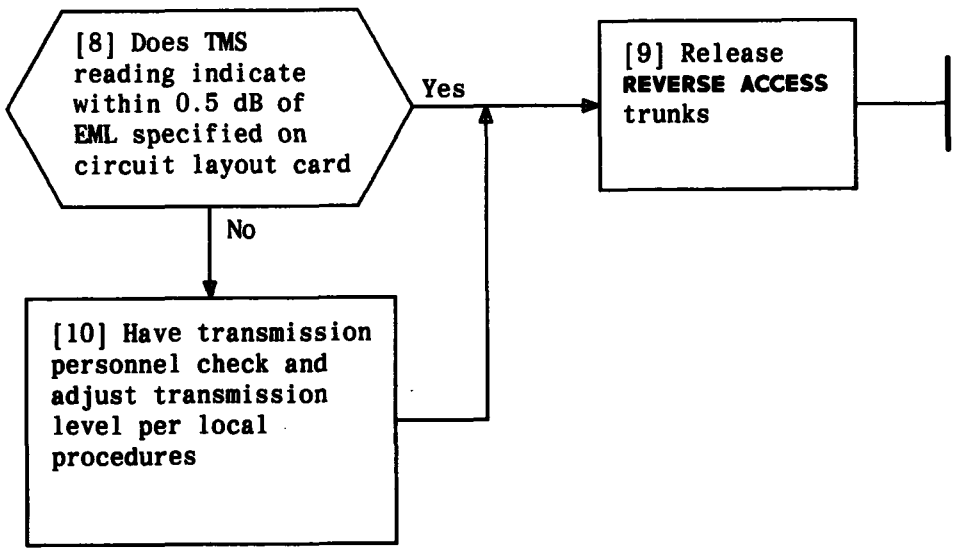

MEASURE 1000 HZ TRANSMISSION LEVELS (CIRCUIT NET LOSS)

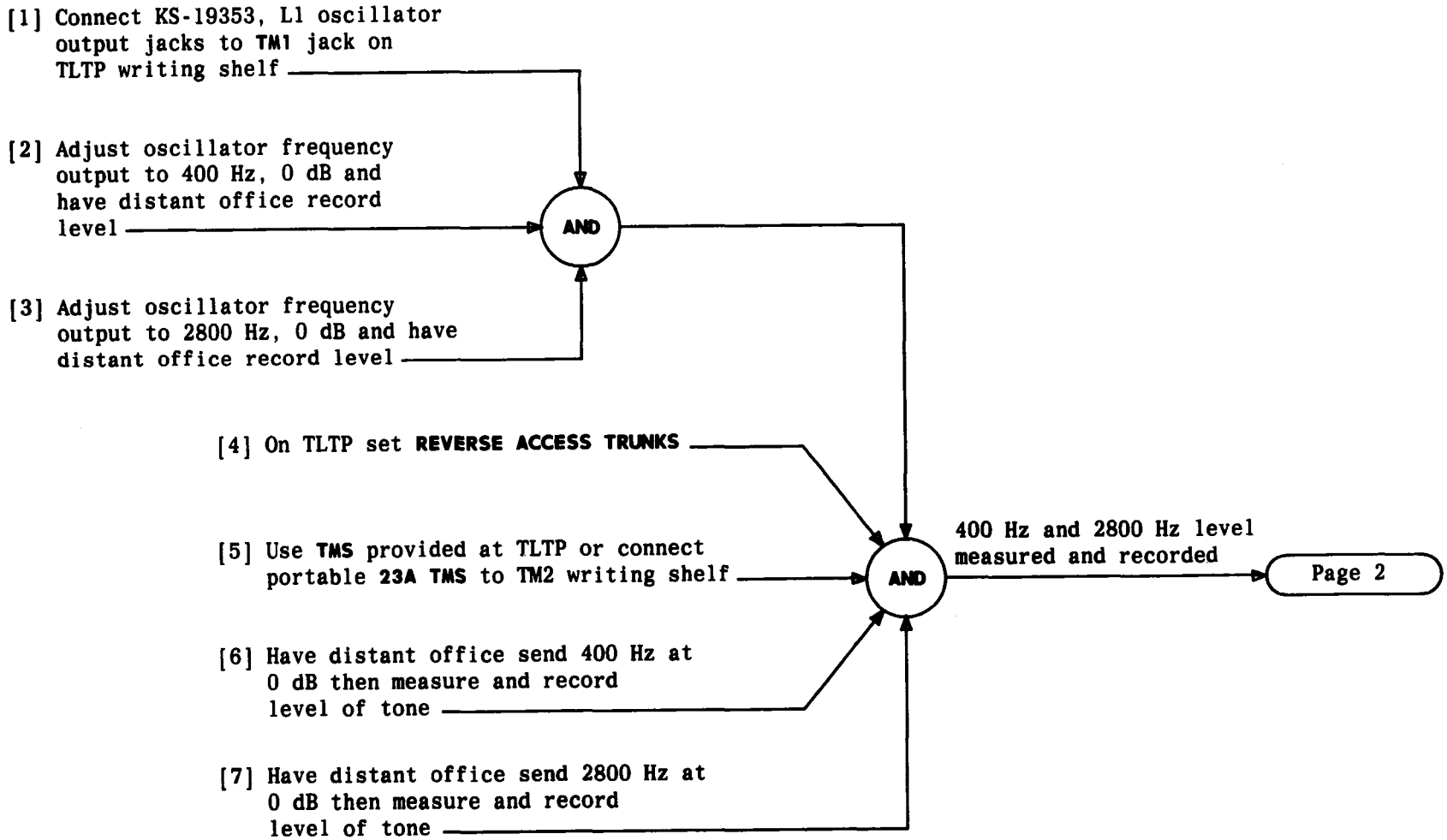

MAKE GAIN-SLOPE MEASUREMENTS

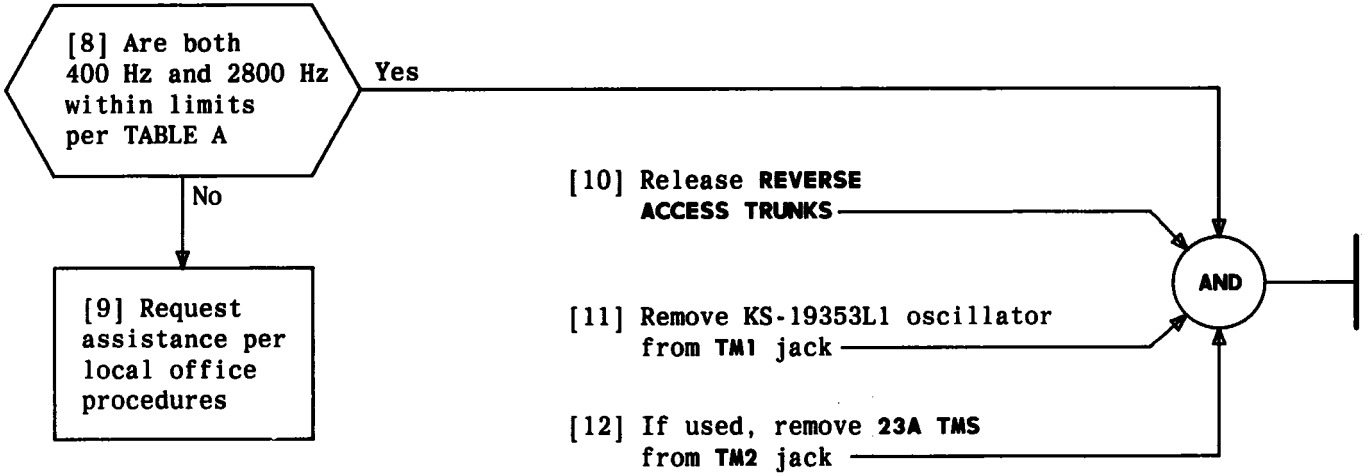

TABLE A

GAIN-SLOPE DEVIATION RELATIVE TO 1000 HZ*

TYPE OF FACILITY	400 Hz	2800 Hz
N1 Carrier	Within 1.5 db more and 1.0 db less loss	Within 3.0 db more and 1.0 db less loss
N2 Carrier	Within 1.5 db more and 1.0 db less loss	Within 2.0 db more and 1.0 db less loss
N3 Carrier	Within 2.0 db more and 1.0 db less loss	Within 1.5 db more and 1.0 db less loss
0, ON Carrier	Within 2.0 db more and 1.0 db less loss	Within 2.5 db more and 1.0 db less loss
D1, D2, D3 Channel Bank	Within 2.0 db more and 1.0 db less loss	Within 2.0 db more and 1.0 db less loss
E Repeatered Trunks	Within 4.0 db more and 1.5 db less loss	Within 4.5 db more and 1.0 db less loss
	Within 2.0 db more and 1.5 db less loss	Within 3.0 db more and 2.5 db less loss
Repeatered Cable	Within 3.0 db more and 1.0 db less loss	Within 4.5 db more and 1.0 db less loss

* On combination trunks, the total gain slope deviation is the sum of the various facilities

MAKE GAIN-SLOPE MEASUREMENTS

MAKE NOISE LEVEL MEASUREMENTS

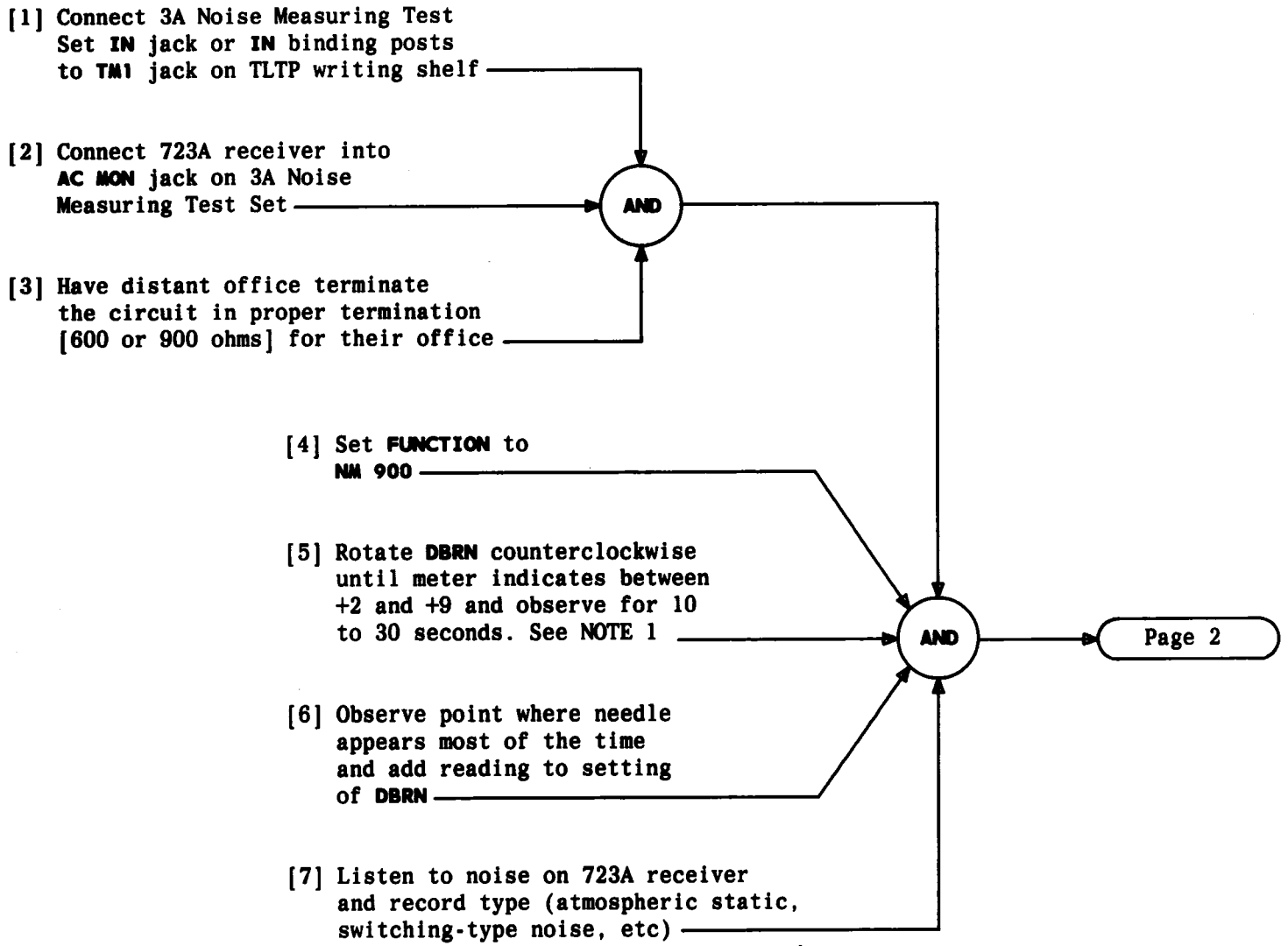

NOTE 1
When measuring rapidly fluctuating noise, the DAMP setting may be used. Read only the maximum of the most frequently occurring peaks in this position.

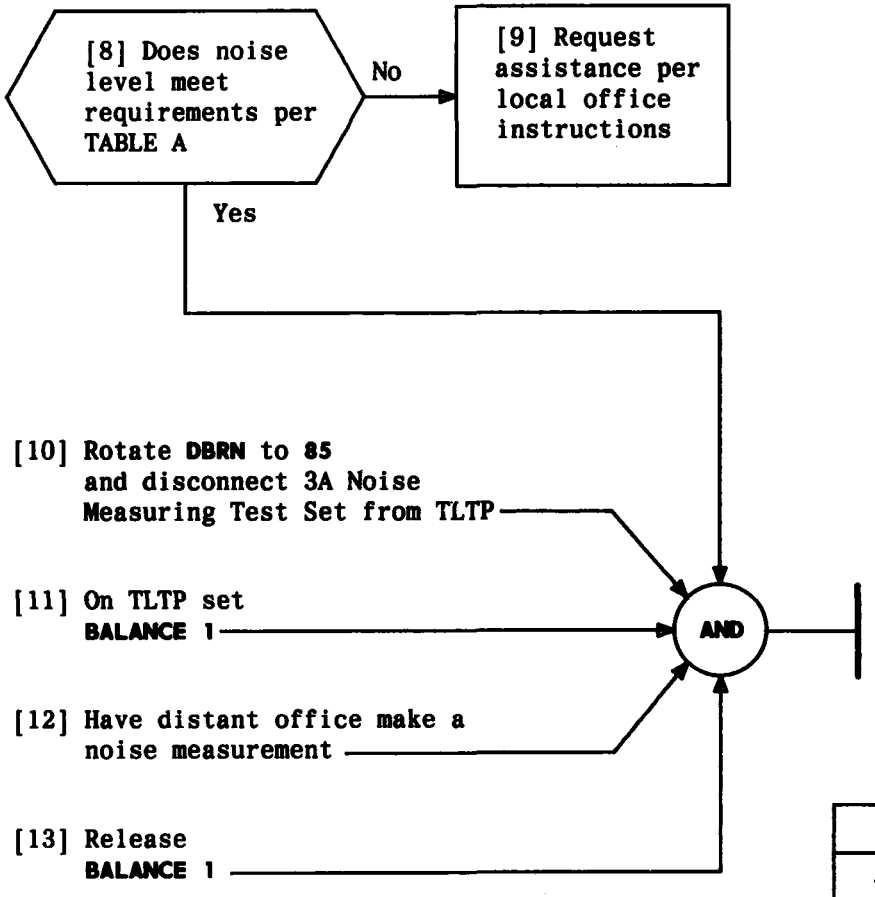

TABLE A	
TYPE OF WORK	VOICE FREQUENCY C-MESSAGE WEIGHTING DBRNC LIMITS
Circuit Order	See noise requirement on circuit layout card. Use first number in the code. Example: 28C36
Routine Maintenance	See noise requirement on circuit layout card. Use second number in code. Example: 28C36

MAKE NOISE LEVEL MEASUREMENTS

[1] Connect clip leads to **FB527** terminal 016

[2] Connect 900 ohm resistor per FIG. 1

[3] Connect oscilloscope per FIG. 1

AND

Page 2

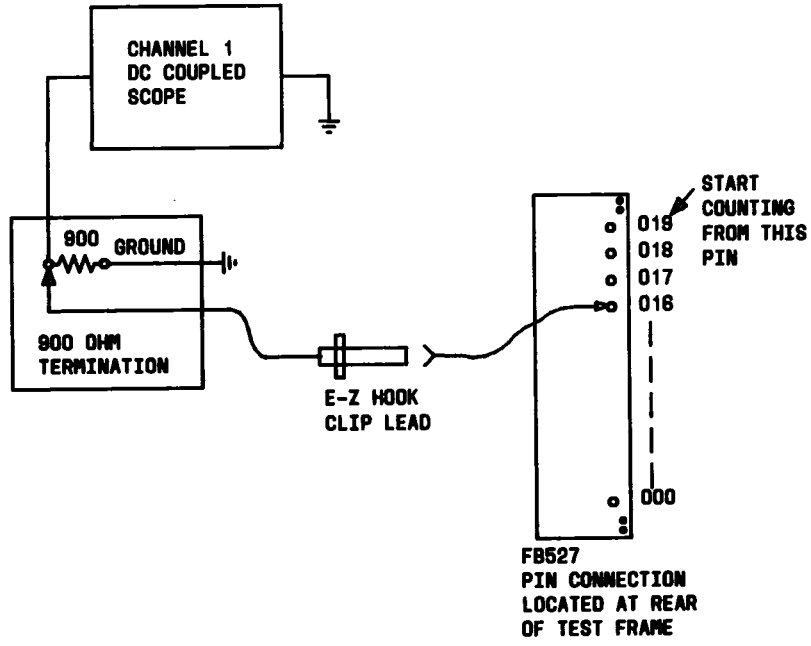

FIG. 1

TEST OPERATION OF TOUCH-TONE RECEIVER TEST CIRCUIT

At TLTP:

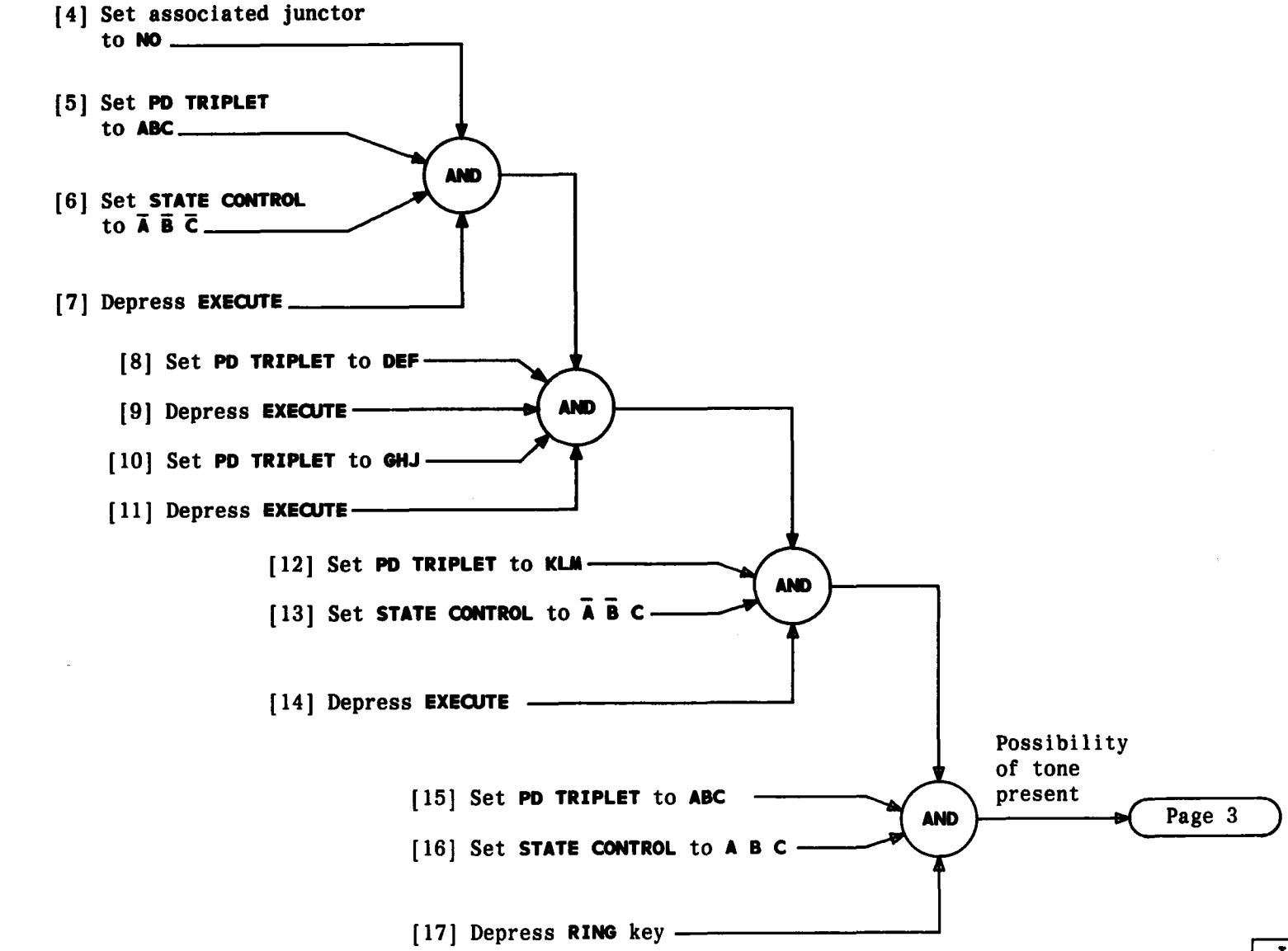

TEST OPERATION OF TOUCH-TONE RECEIVER TEST CIRCUIT

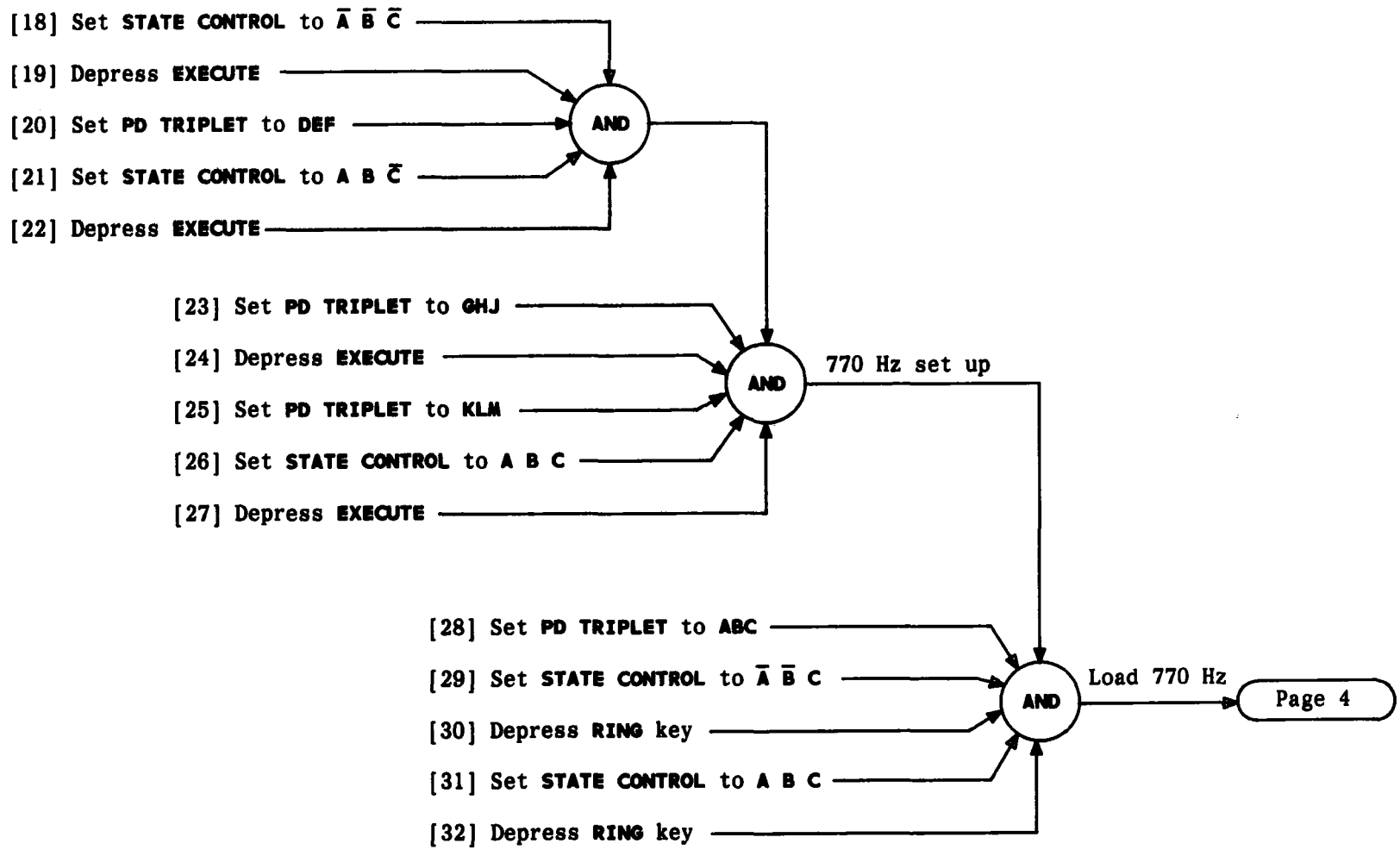

TEST OPERATION OF TOUCH-TONE RECEIVER TEST CIRCUIT

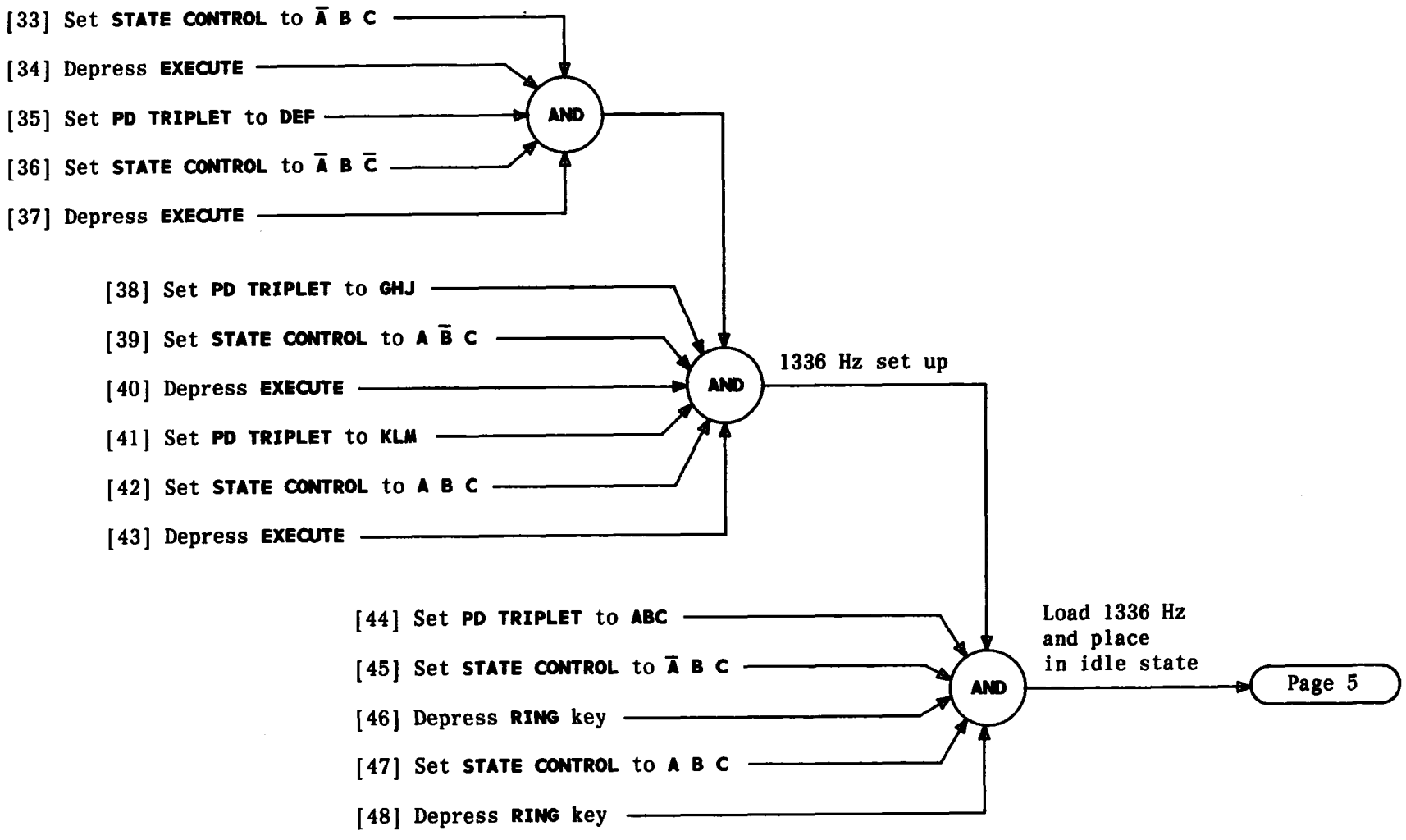

TEST OPERATION OF TOUCH-TONE RECEIVER TEST CIRCUIT

[49] Set **STATE CONTROL** to **A B $\overline{C}$**

[50] Depress **EXECUTE**

[51] Set **PD TRIPLET** to **DEF**

[52] Set **STATE CONTROL** to **A B C**

[53] Depress **EXECUTE**

AND

[54] Set **PD TRIPLET** to **ABC**

[55] Set **STATE CONTROL** to **A $\overline{B}$ C**

[56] Depress **RING** key

[57] Set **STATE CONTROL** to **A B C**

[58] Depress **RING**

AND

[59] Set **PD TRIPLET** to **KLM**

[60] Set **STATE CONTROL** to **$\overline{A}$ $\overline{B}$ $\overline{C}$**

[61] Depress **EXECUTE**

AND

Send digit "5"and noise tone

[62] On scope, is wave form shown in FIG. 2 present (superimposed square wave on two sine waves)

Yes

No

[63] Refer trouble condition to installation force group

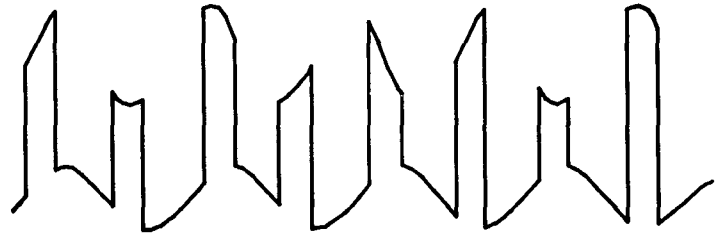

FIG. 2 - Scope Settings
.5V/DIV .5MS/DIV

Issue 3	AUG 1984
233-142-100	DLP
PAGE 5 of 5	571

TEST OPERATION OF TOUCH-TONE RECEIVER TEST CIRCUIT

[1] Select and record in TABLE A the directory numbers and office equipment (OE) numbers for lines used in this test [NOTE 1]

↓

[2] Install resistances at resistor test locations on distributing frame [TABLE A]

↓

[3] For first line in TABLE A, at TTY, type in SRG test message for 80K range [NOTE 2, Page 2]

↓

Page 2

TABLE A
SRG TEST DATA

LINES *	DIRECTORY NUMBER	OFFICE EQPT NUMBER					RESISTOR VALUE	RESISTOR TEST LOCATION *	EXPECTED FAILURE SEVERITY NUMBER RANGE SPECIFIED ON INPUT		
		CONC GRP	CONC	SW GRP	SW	LEV			80K	320K	2.56M
GS1							470K	R to G			
TL1							10K	R to G	7	7	7
TL2							30K	R to G	3	7	7
TL3							62K	R to G	1	7	7
TL4							120K	R to G		3	7
TL5							240K	R to G		1	7
CL1							470K	R to G			7
CL2							910K	R to G			3
CL3							1.8M	R to G			1
CL4							3.0M	R to G			
CL5							10K	T to G			
CL6							62K	T to G			
CL7							120K	T to G			
CL8							470K	T to G			
CL9							30K	T to R	3	7	7
CL10							62K	T to G	1	7	7

* GS = Ground start line
TL = Loop start test line
CL = Loop start customer line
R = Ring
T = Tip
G = Ground

NOTE 1
After selection of lines, directory numbers and office equipment numbers can be found in office records

VERIFY ALIT SHORT OR RING TO GROUND (SRG) TEST CAPABILITY

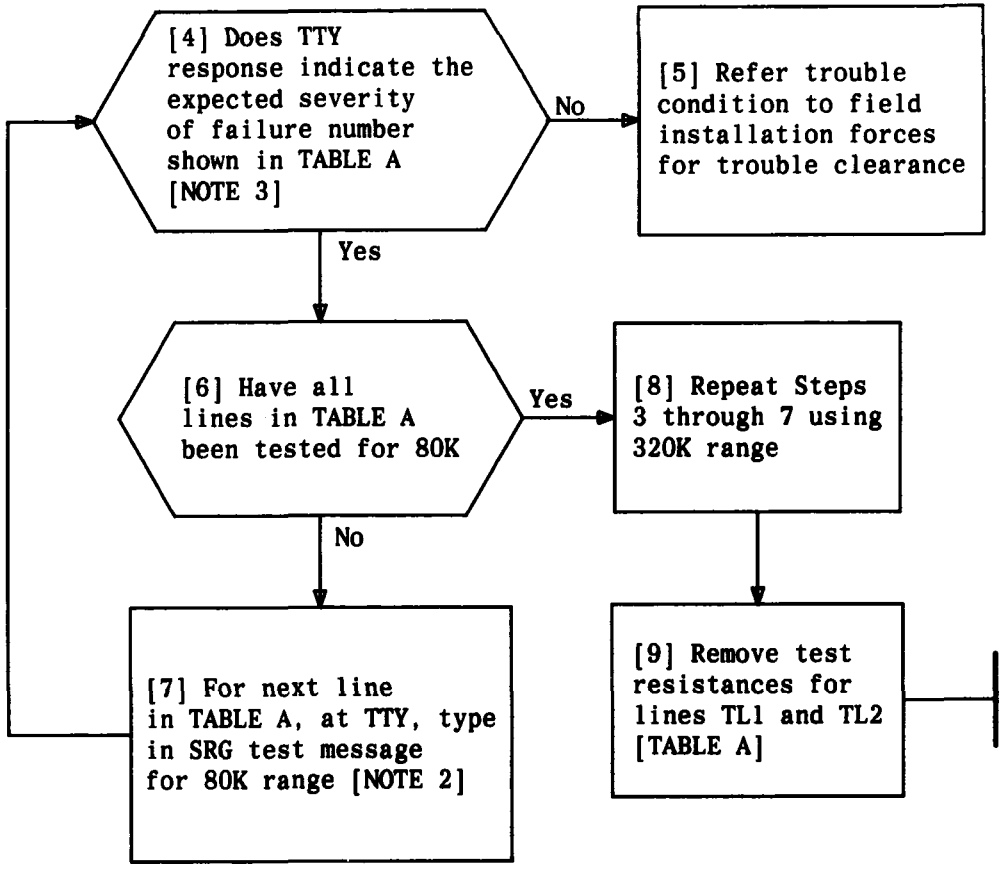

NOTES

2. SRG test message:
TST:LINE a bcde 1 g!
   a bcde = OE number
   g = Test Range (80K, 320K, or 2.56M)

3. Responses to SRG test message:
tt TST LINE a bcde
TN f g ERR 0 or
tt TST LINE a bcde
TN f g COMPL
   a bcde = OE number
   f = Directory number
   g = Severity number or (in 3E3 Generic only)
tt TST LINE a bcde
TN f g ABT h
   a bcde = OE number
   f = Directory number
   g = Test and Range
   h = Reason for Abort

VERIFY ALIT SHORT OR RING TO GROUND (SRG) TEST CAPABILITY

[1] Record in TABLE A the directory numbers and office equipment (OE) numbers for lines used in SRG test [DLP-572]

[2] Verify that test resistors have been installed at test locations [TABLE A]

Page 2

TABLE A
TRG TEST DATA

L* I N E S	DIRECTORY NUMBER	OFFICE EQPT NUMBER					RESISTOR VALUE	RESISTOR TEST LOCATION *	EXPECTED FAILURE SEVERITY NUMBER RANGE SPECIFIED ON INPUT		
		CONC GRP	CONC	SW GRP	SW	LEV			80K	320K	2.56M
GS1							470K	R to G			
TL4							120K	R to G		3	7
TL5							240K	R to G		1	7
CL1							470K	R to G			7
CL2							910K	R to G			3
CL3							1.8M	R to G			1
CL4							3.0M	R to G			
CL6							62K	T to G	1	7	7
CL7							120K	T to G		3	7
CL8							470K	T to G			7
CL10							62K	T to R			

* GS = Ground start line
TL = Loop start test line
CL = Loop start customer line
R = Ring
T = Tip
G = Ground

VERIFY ALIT TIP OR RING TO GROUND (TRG) TEST CAPABILITY

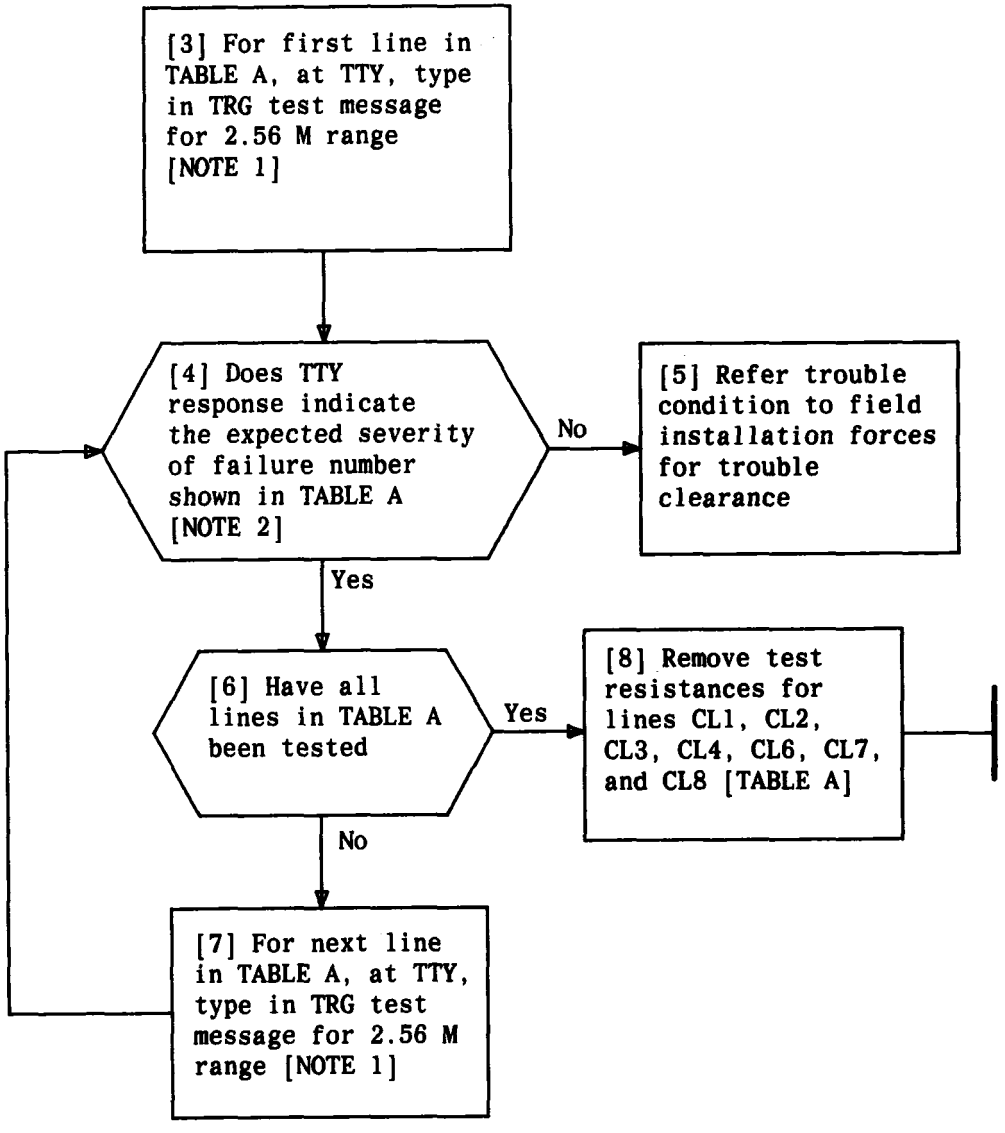

NOTES

1. TRG test message:
   TST:LINE a bcde 2 g!
   a bcde = OE number
   g = Test Range (80K, 320K, or 2.56M)

2. Responses to TRG test message
   tt TST LINE a bcde
   TN f g ERR 1 or
   tt TST LINE a bcde
   TN f g COMPL
   a bcde = OE number
   f = Directory number
   g = Severity number or (in 3E3 Generic only)
   tt TST LINE a bcde
   TN f g ABT h
   a bcde = OE number
   f = Directory number
   g = Test and Range
   h = Reason for abort

VERIFY ALIT TIP OR RING TO GROUND (TRG) TEST CAPABILITY

[1] Record in TABLE A directory numbers and office equipment (OE) numbers for lines used in SRG test [DLP-572]

[2] Change resistor locations as shown in TABLE A

Page 2

TABLE A
FEMF TEST DATA

L* I N E S	DIRECTORY NUMBER	OFFICE EQPT NUMBER					RESISTOR VALUE	RESISTOR TEST LOCATION *	EXPECTED FAILURE SEVERITY NUMBER		
		CONC GRP	CONC	SW GRP	SW	LEV			RANGE SPECIFIED ON INPUT		
										320K	
GS1							470K	R to G			
TL3							62K	R to -48V		7	
TL4							120K	R to -48V		3	
TL5							240K	R to -48V		1	
CL5							10K	T to G			
CL9							30K	T to -48V		7	
CL10							62K	T to -48V		7	

* GS = Ground start line
TL = Loop start test line
CL = Loop start customer line
R = Ring
T = Tip
G = Ground

VERIFY ALIT FOREIGN EMF TEST CAPABILITY

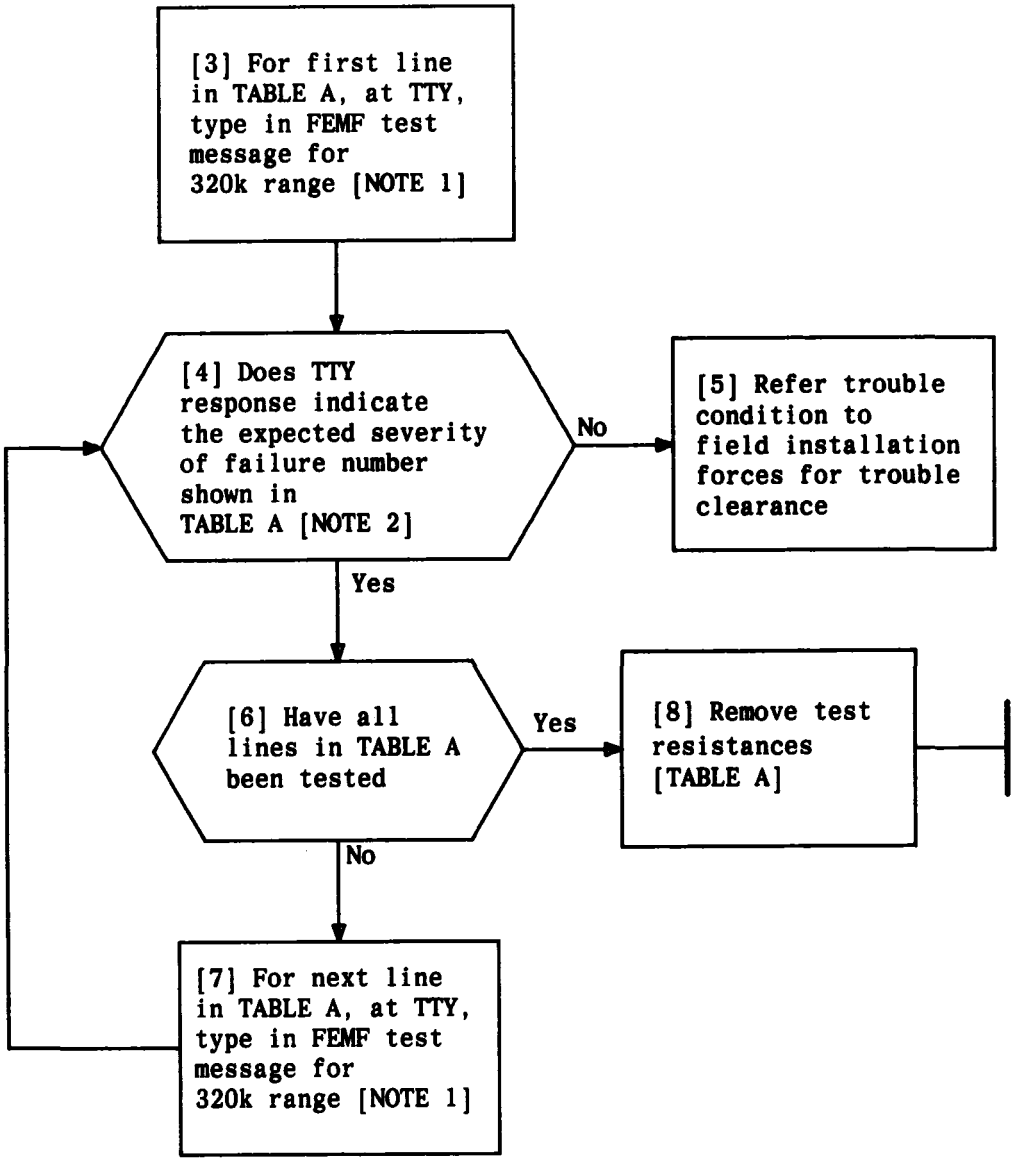

VERIFY ALIT FOREIGN EMF TEST CAPABILITY

NOTES

1. FEMF test message:
TST:LINE a bcde 4 g!
   a bcde = OE number
   g = Test Range (80K, 320K, or 2.56M)

2. Responses to FEMF message:
tt TST LINE a bcde
TN f g ERR 2 or
tt TST LINE a bcde
TN f g COMPL
   a bcde = OE number
   f = Directory number
   g = Severity number or (in 3E3 Generic only)
tt TST LINE a bcde
TN f g ABT h
   a bcde = OE number
   f = Directory number
   g = Test and Range
   h = Reason for abort

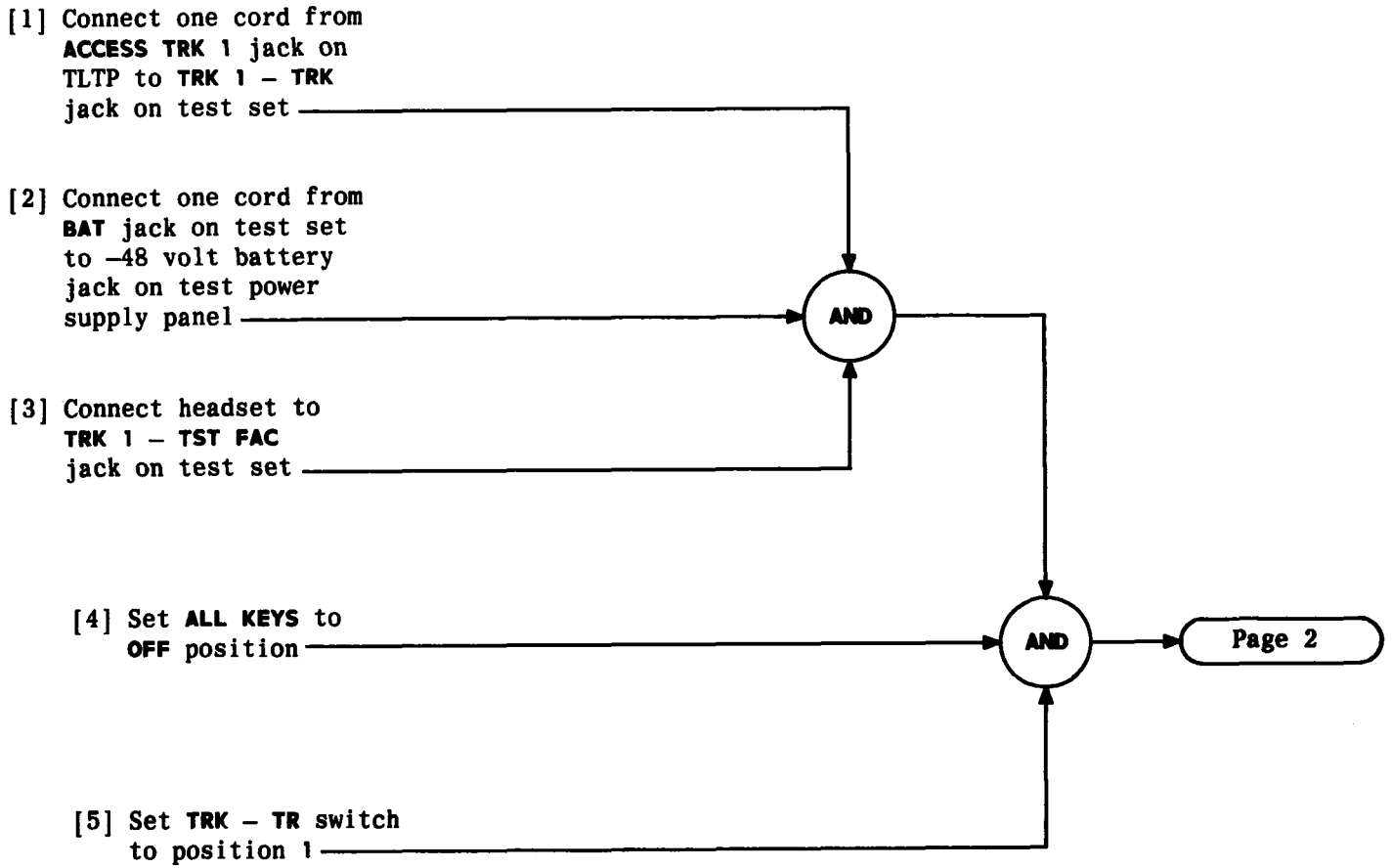

Issue 3	AUG 1984
233-142-100	DLP
PAGE 1 of 2	575

CONDITION J94742A TEST SET

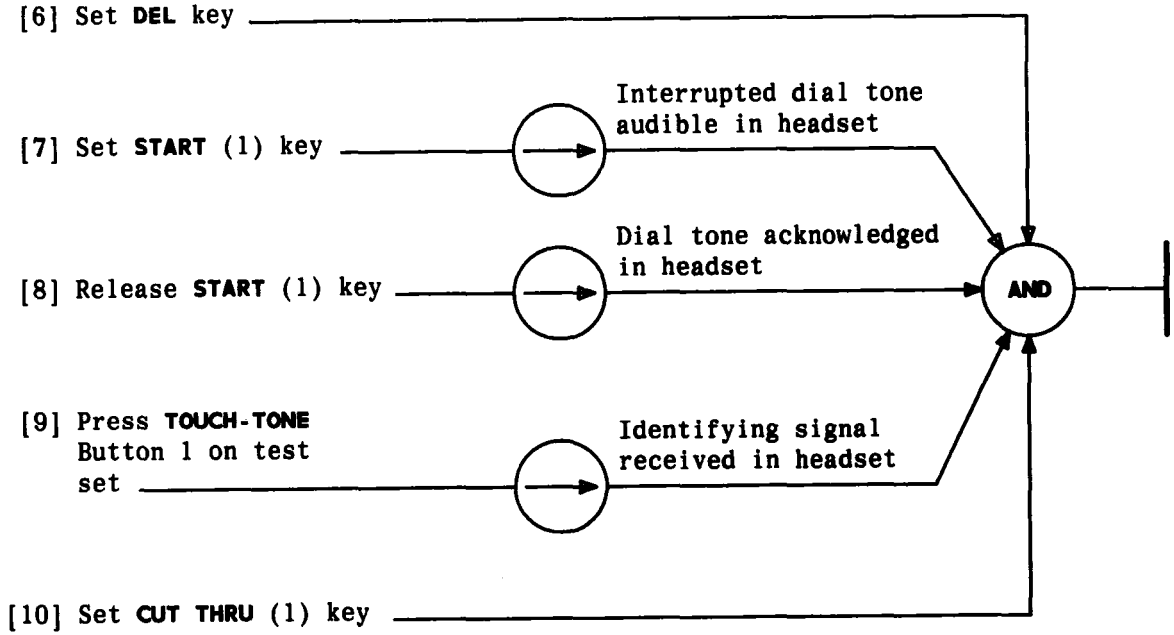

CONDITION J94742A TEST SET

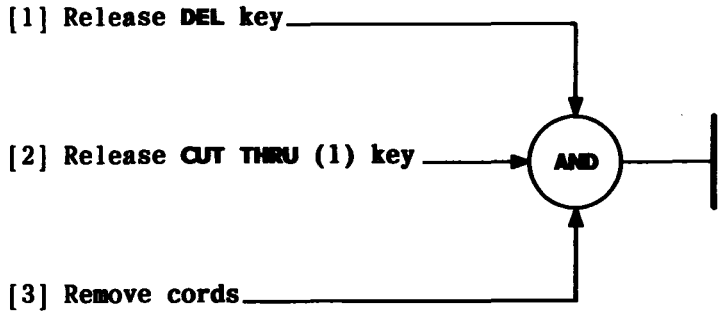

RELEASE J94742A TEST SET FROM TLTP

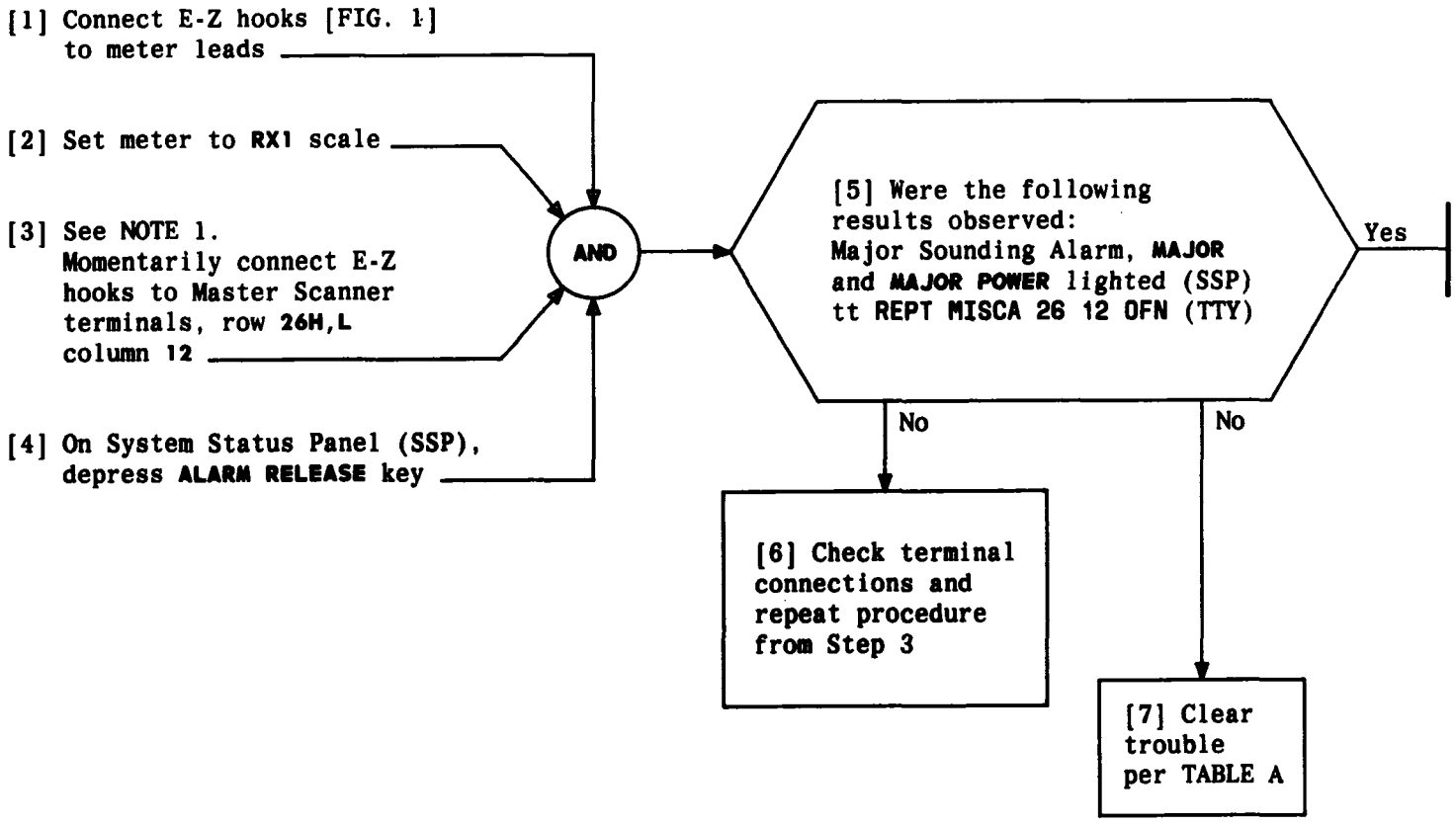

TABLE A		
INDICATOR LOCATION	INDICATION NOT OBSERVED	TROUBLE CLEARING DATA
Building	Major Sounding Alarm	TAP-100
SSP	MAJOR and MAJOR POWER lighted	TAP-112
TTY	tt REPT MISCA 26 12 OFN	TAP-113

NOTE 1
Use care in connecting Master Scanner terminals. Improper connections cause erroneous results

TEST AC DISTRIBUTION ALARM

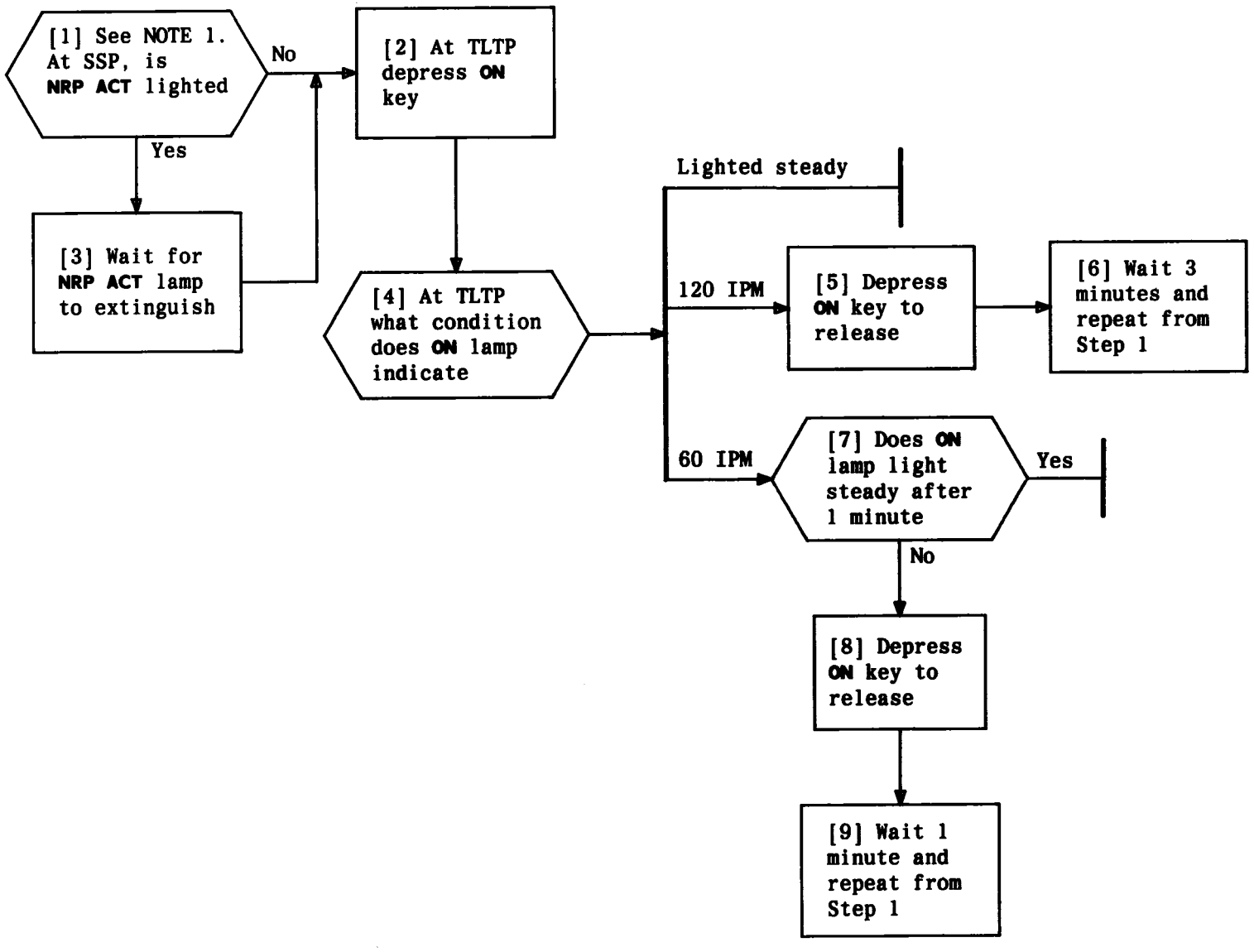

NOTE 1
On some SSP vintages, the NRP ACT lamp may be labeled as SPARE

Issue 3	AUG 1984
233-142-100	DLP
PAGE 1 of 1	578

ACTIVATE TRUNK AND LINE TEST PANEL (TLTP) IN OFFICE WITH SO-2 GENERIC

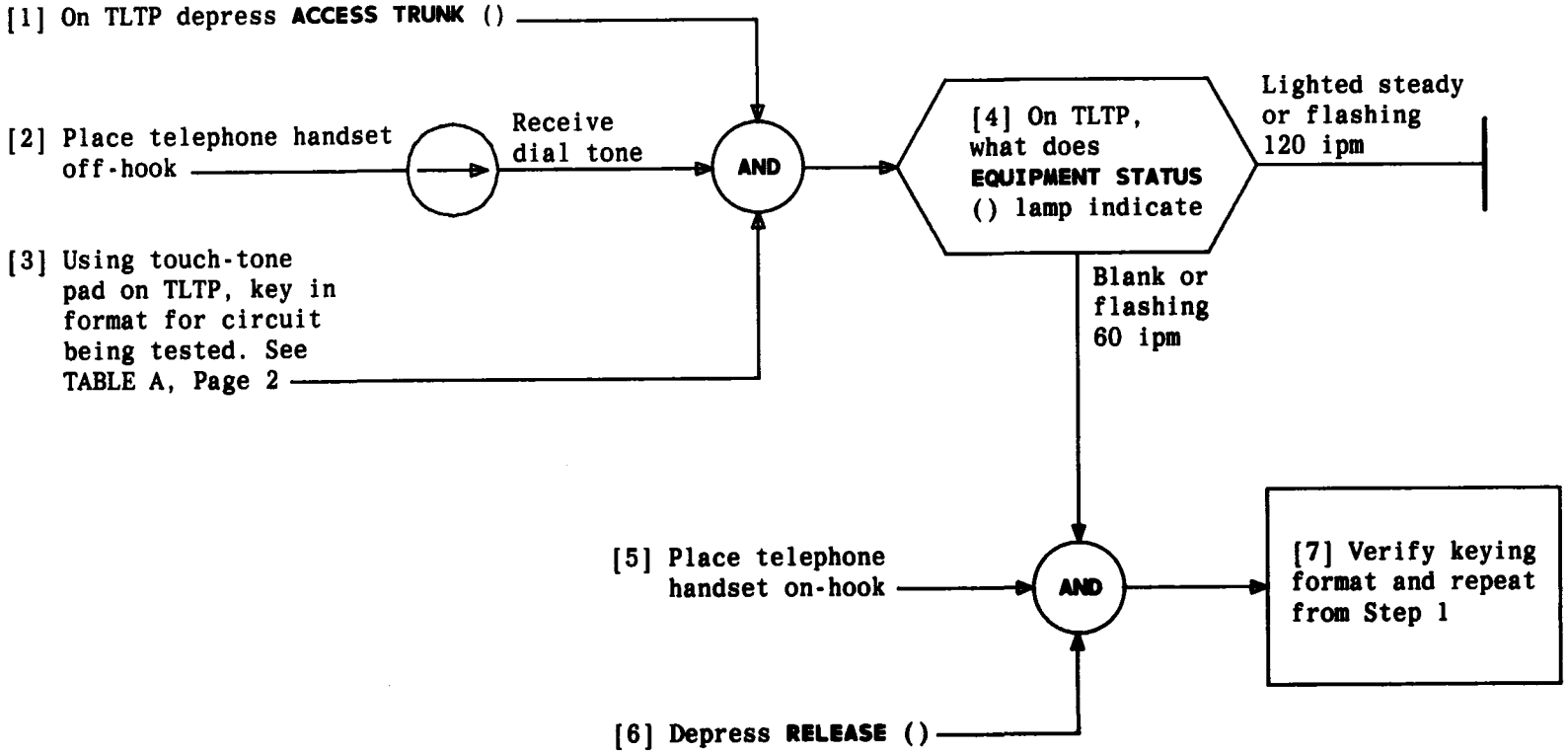

SET UP TRUNK AND LINE TEST PANEL (TLTP) FOR TESTING

TABLE A

ASSIGNED DIALING CODES

TYPE OF CIRCUIT	KEYING FORMAT						
Trunk Circuit	1	TGN	MEMN	#			
Trunk Circit With Outpulsing	1	TGN	MEMN	*	Wait for dial tone	Dial digits # to be outpulsed	
Service and Test Circuits	1	TGN	MEMN	#			
Service Circuit With More Than One Port	1	TGN	MEMN	Number of port to be tested (0,1 or 2)	#		
Tone and Announcement Circuit	1	TGN	MEMN	#			
Subscriber Line	2	Directory Number		#			
Junctor	3	CGN	JSN	#			
Trunk to #5 XBAR ACD (with/without SF units)	6	TGN	MEMN	*	Wait for dial tone	1/0†	#

TGN	Trunk Group Number	3 Digits	Prefix with zeros if necessary
MEMN	Member Number	3 Digits	
CGN	Concentrator Group Number	2 Digits	
JSN	Junctor Switch Number	2 Digits	
*	Eleventh Button on Touch-Tone Pad		
#	Twelfth Button on Touch-Tone Pad		

† : 1 = with SF Unit
0 = without SF Unit

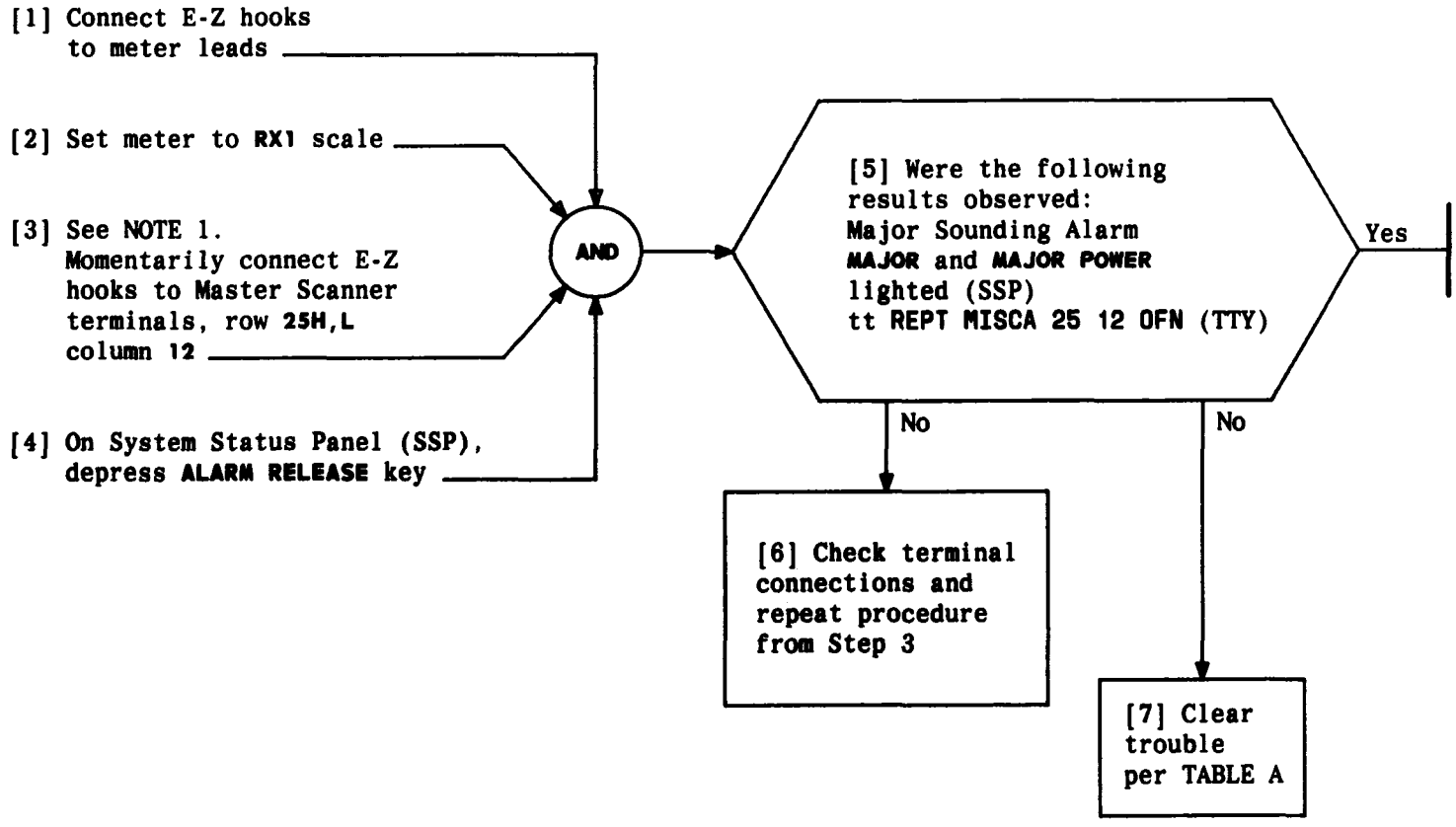

TABLE A		
INDICATOR LOCATION	INDICATION NOT OBSERVED	TROUBLE CLEARING DATA
Building	Major Sounding Alarm	TAP-100
SSP	MAJOR and MAJOR POWER lighted	TAP-112
TTY	tt REPT MISCA 25 12 OFN	TAP-113

NOTE 1
Use care in connecting Master Scanner terminals. Improper connections cause erroneous results

TEST COMMERCIAL POWER FAILURE ALARM

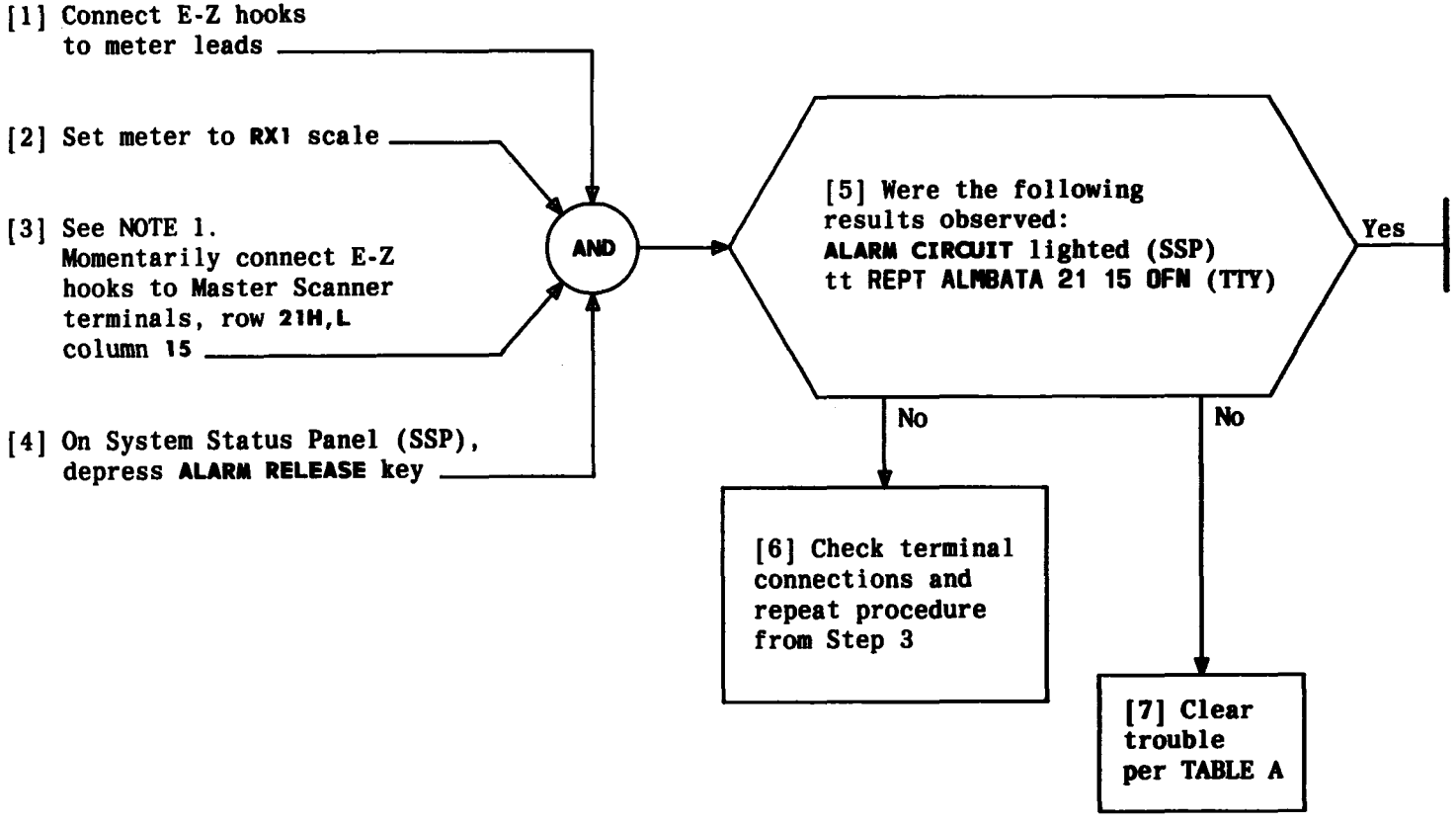

TABLE A		
INDICATOR LOCATION	INDICATION NOT OBSERVED	TROUBLE CLEARING DATA
Building	Major Sounding Alarm	TAP-100
SSP	MAJOR lighted	TAP-112
TTY	tt REPT ALMBATA 21 15 OFN	TAP-113

NOTE 1
Use care in connecting Master Scanner terminals. Improper connections cause erroneous results

TEST ALARM BATTERY ALARM

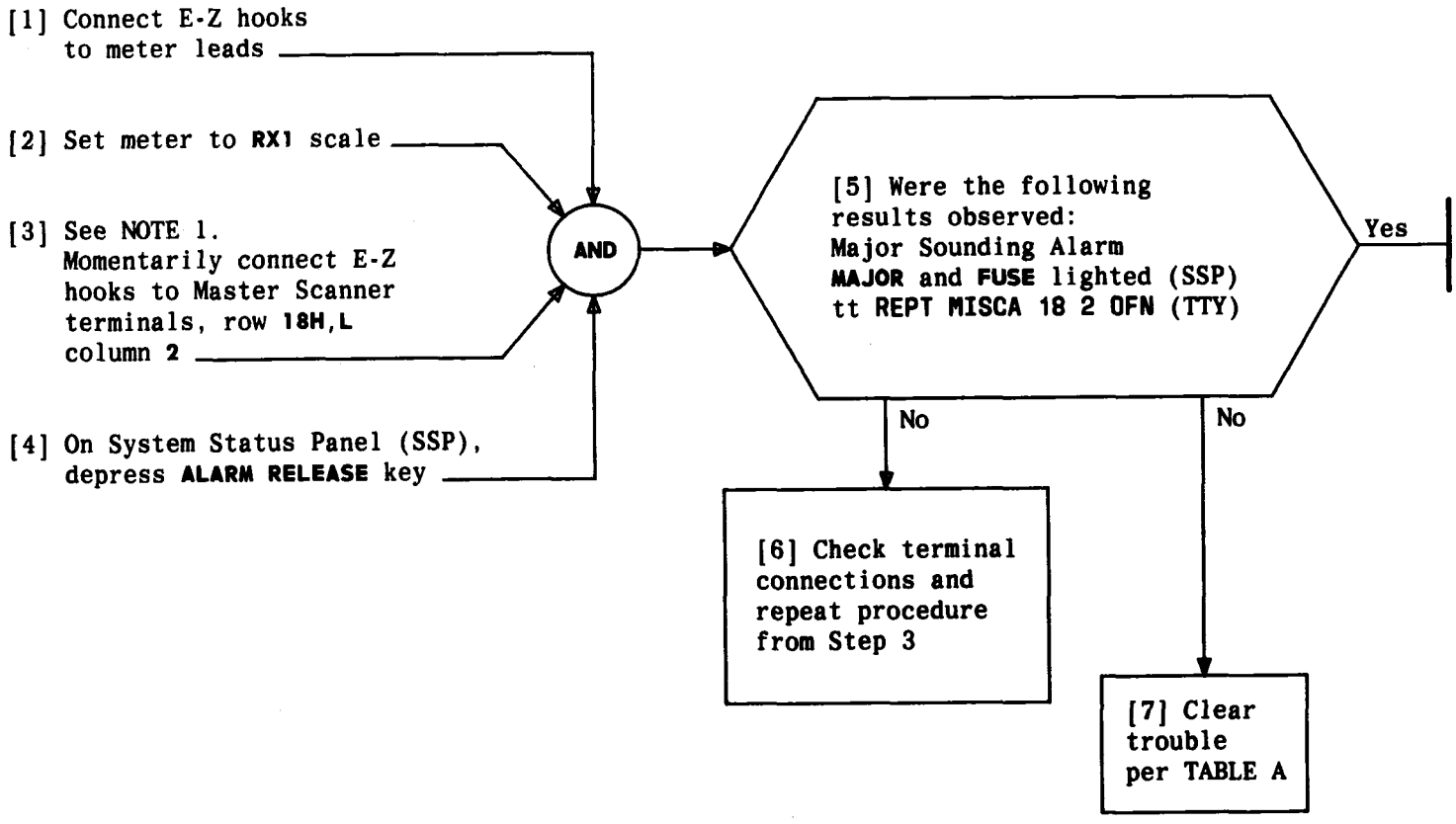

TABLE A		
INDICATOR LOCATION	INDICATION NOT OBSERVED	TROUBLE CLEARING DATA
Building	Major Sounding Alarm	TAP-100
SSP	MAJOR and FUSE lighted	TAP-112
TTY	tt REPT MISCA 18 2 OFN	TAP-113

NOTE 1
Use care in connecting Master Scanner terminals. Improper connections cause erroneous results

TEST TOLL DISTRIBUTION ALARM

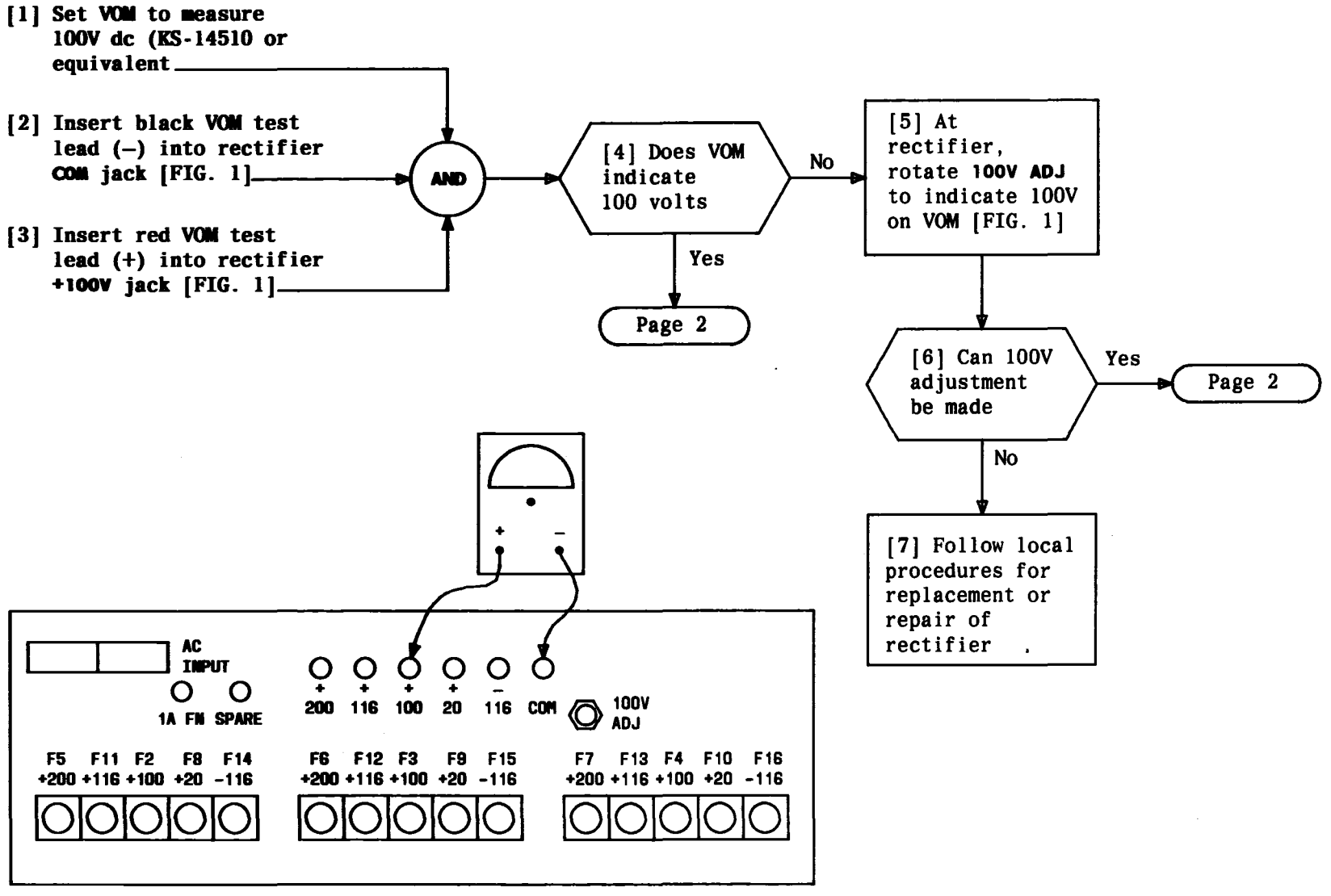

FIG. 1

CHECK AND ADJUST KS-19412 RECTIFIER OUTPUT VOLTAGES

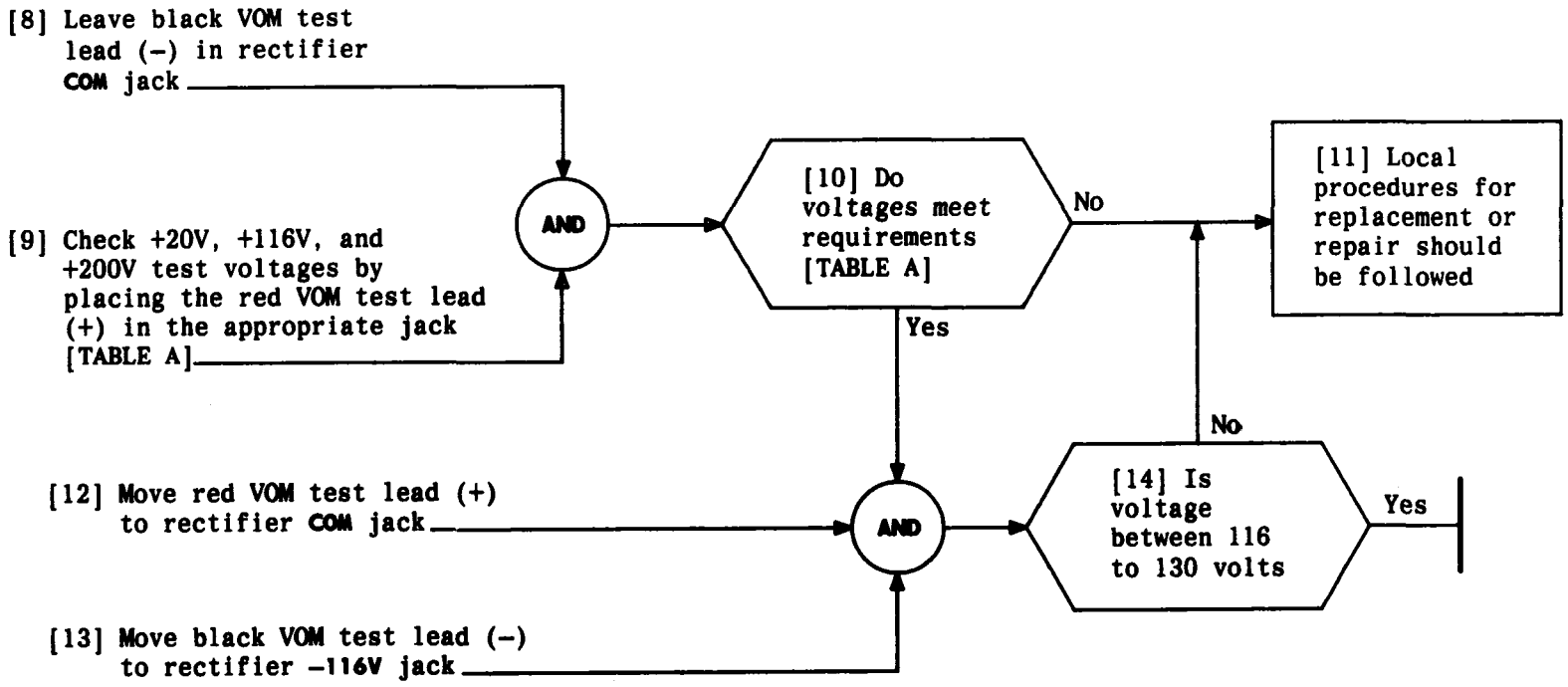

TABLE A	
VOLTAGE	REQUIREMENTS
+20	19.6 to 20.4 volts
+116	116 to 130 volts
+200	200 to 225 volts

CHECK AND ADJUST KS-19412 RECTIFIER OUTPUT VOLTAGES

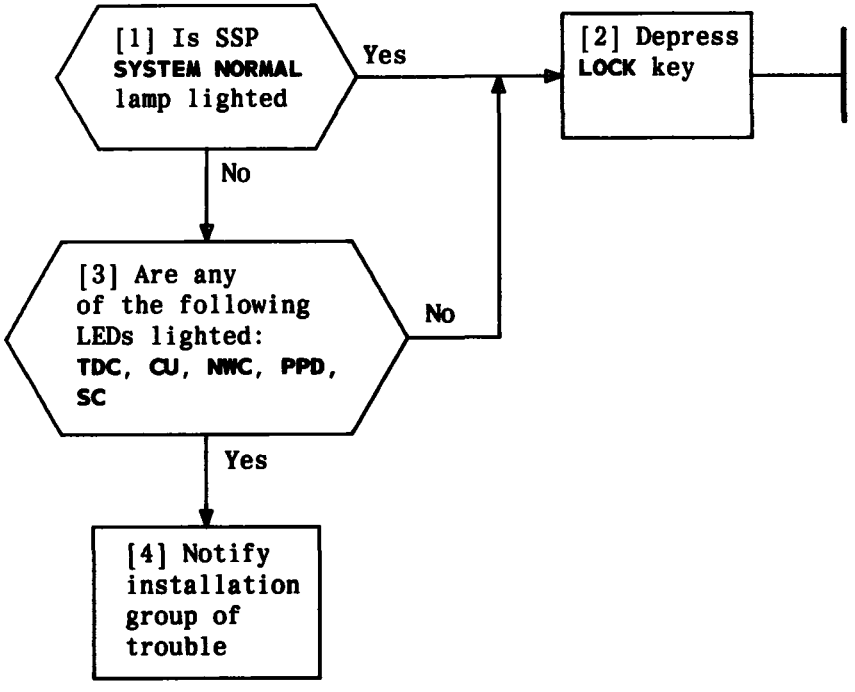

CONDITION SYSTEM CONTROLLER FOR TESTING

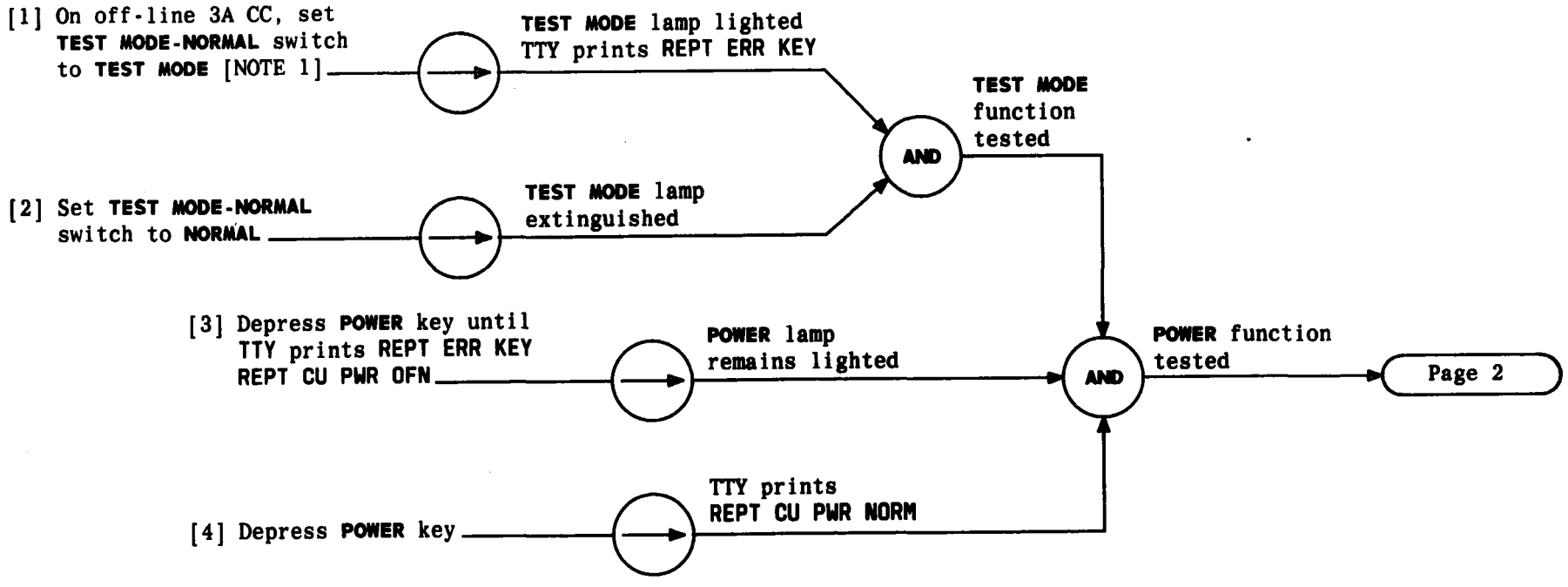

NOTE 1
Switch is located on back of panel.
Switch arm must be pulled out before it can be moved

Issue 3	AUG 1984
233-142-100	DLP
PAGE 1 of 2	585

TEST CONTROL UNIT STATUS FUNCTIONS AND INDICATORS

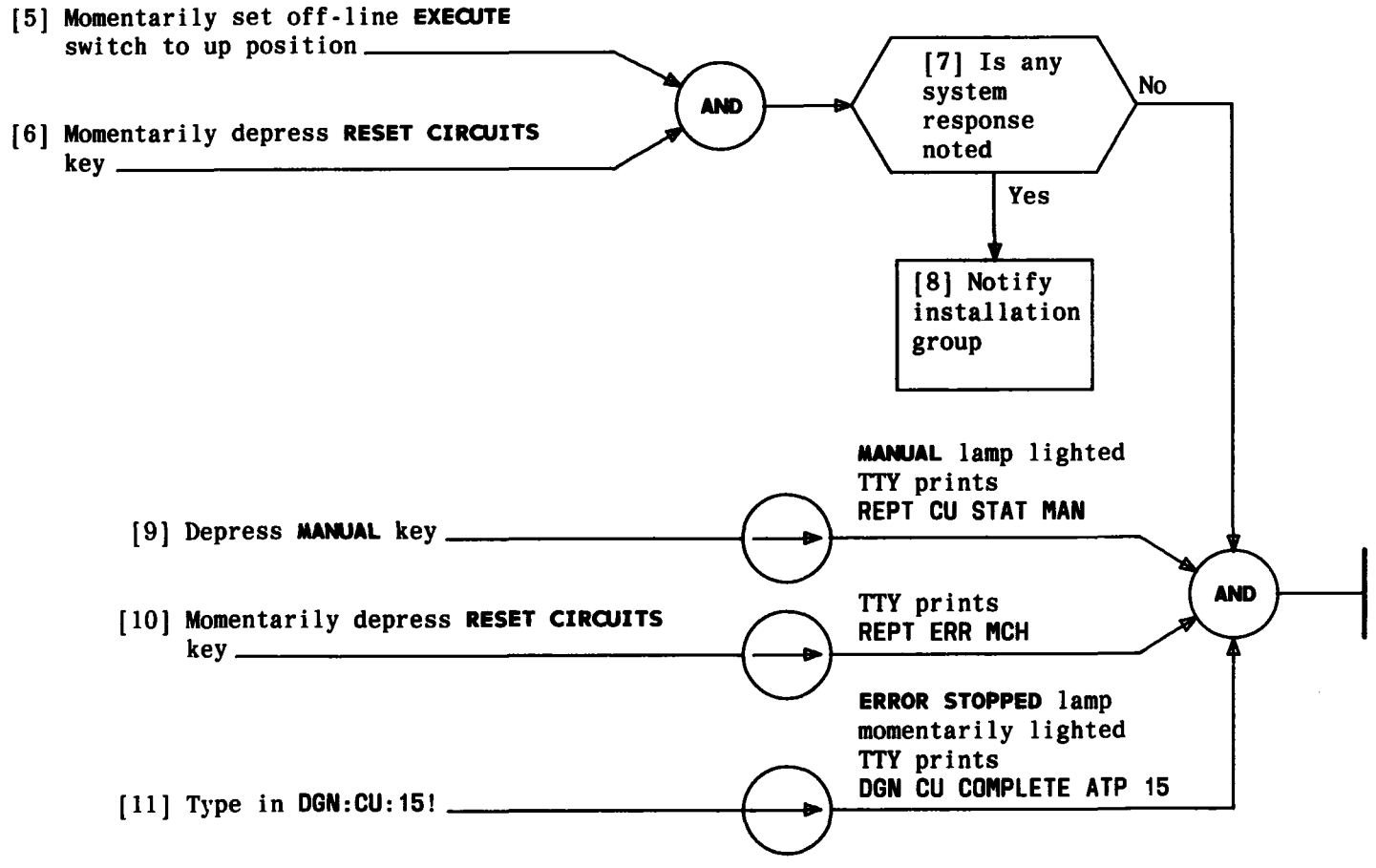

TEST CONTROL UNIT STATUS FUNCTIONS AND INDICATORS

TEST LOADING AND DISPLAYING OF REGISTERS

At Not Active 3A Central Control Panel:

[1] Verify all switches except **HALT** key are in down position

[2] At **REGISTER** section, set **LOAD** and **DISPLAY** switches to up position

[3] Set **LOAD AND DISPLAY** switches **0** through **19** to up position

[4] At **REGISTER SELECT** area select register to be tested [NOTE 1, TABLE A]

[5] Momentarily set **EXECUTE** switch to up position

AND

[6] Are **LOAD AND DISPLAY** LEDs **0** through **15**, **PL** and **PH** lighted; LEDs **16** through **19**, **ENABLE MANUAL PAR** extinguished

No

[7] Notify installation group

Yes

[8] Have all registers been tested

No

[9] Repeat procedure from Step 4

Yes

Page 2

TABLE A	
REGISTER SELECTED	REGISTER SELECT SWITCHES IN UP POSITION
0	NONE
1	1
2	2
3	1, 2
4	4
5	4, 1
6	4, 2
7	4, 2, 1
8	8
9	8,1
10	8,2
11	8, 2, 1
12	8, 4
13	8, 4, 1
14	8, 4, 2
15	8, 4, 2, 1

NOTE 1
Starting with register 0, all registers through 15 are tested one at a time

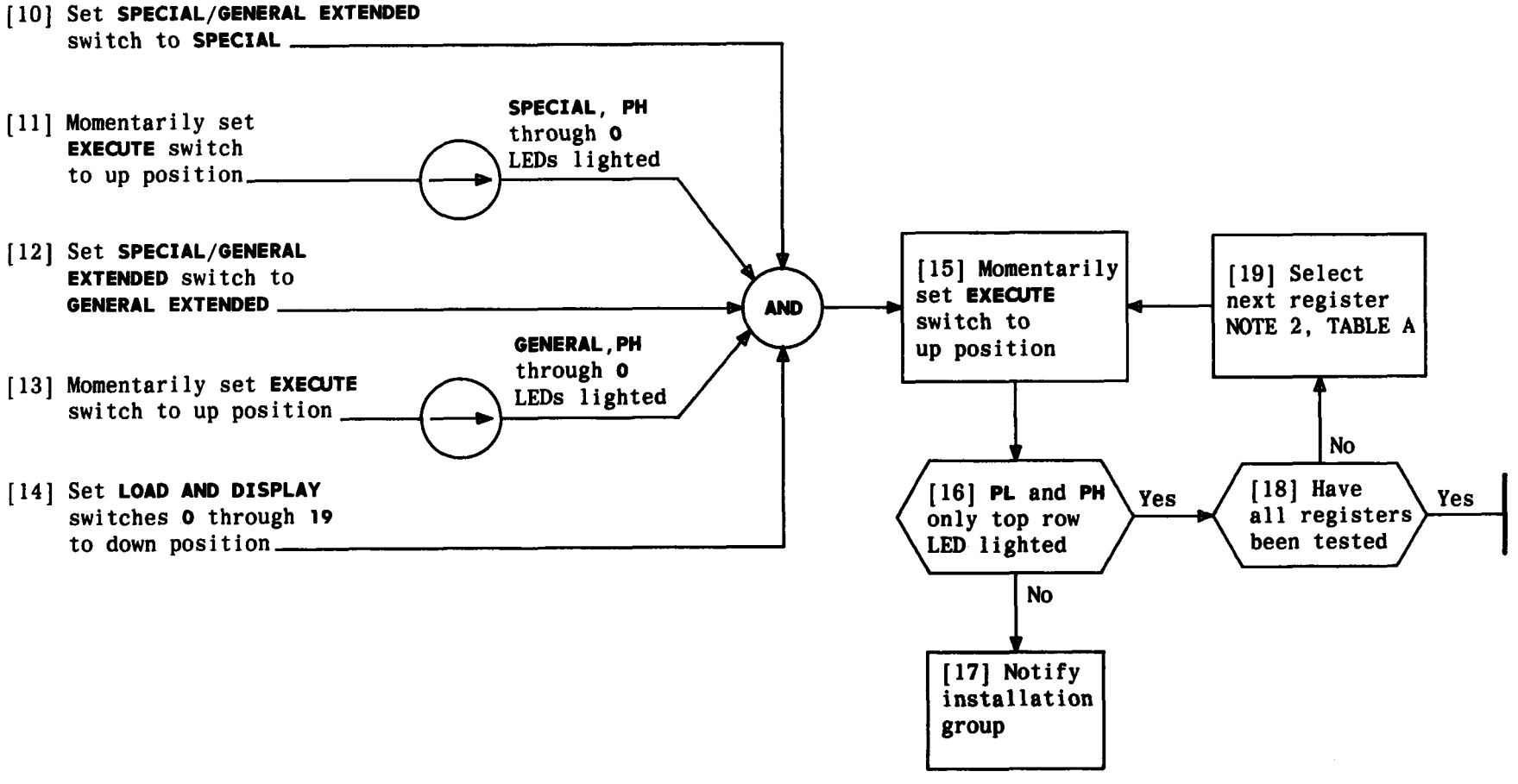

NOTE 2	
Starting with register 15, all registers through 0 are tested	
Issue 3	AUG 1984
233-142-100	DLP
PAGE 2 of 2	586

TEST LOADING AND DISPLAYING OF REGISTERS

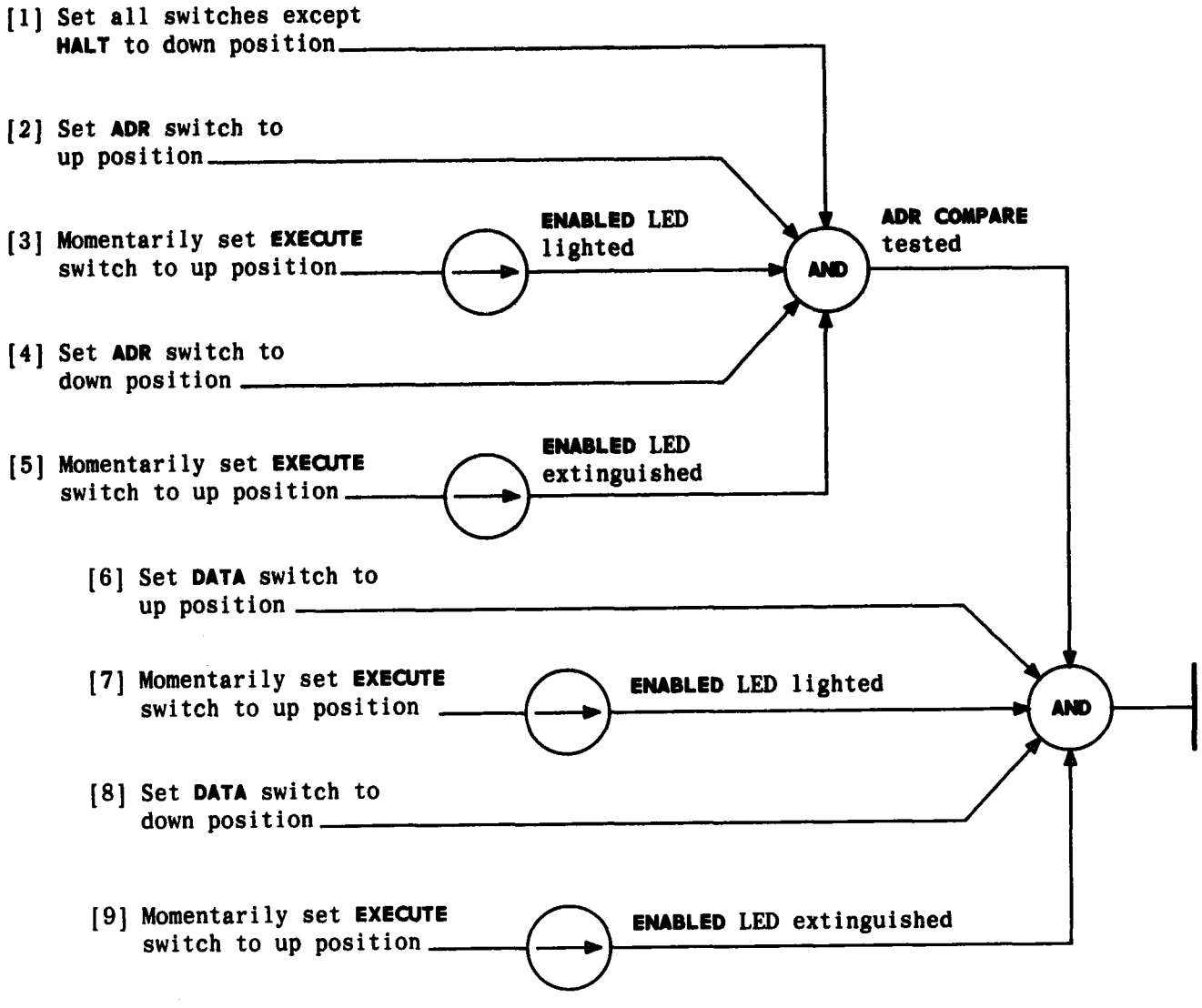

TEST COMPARE INDICATOR

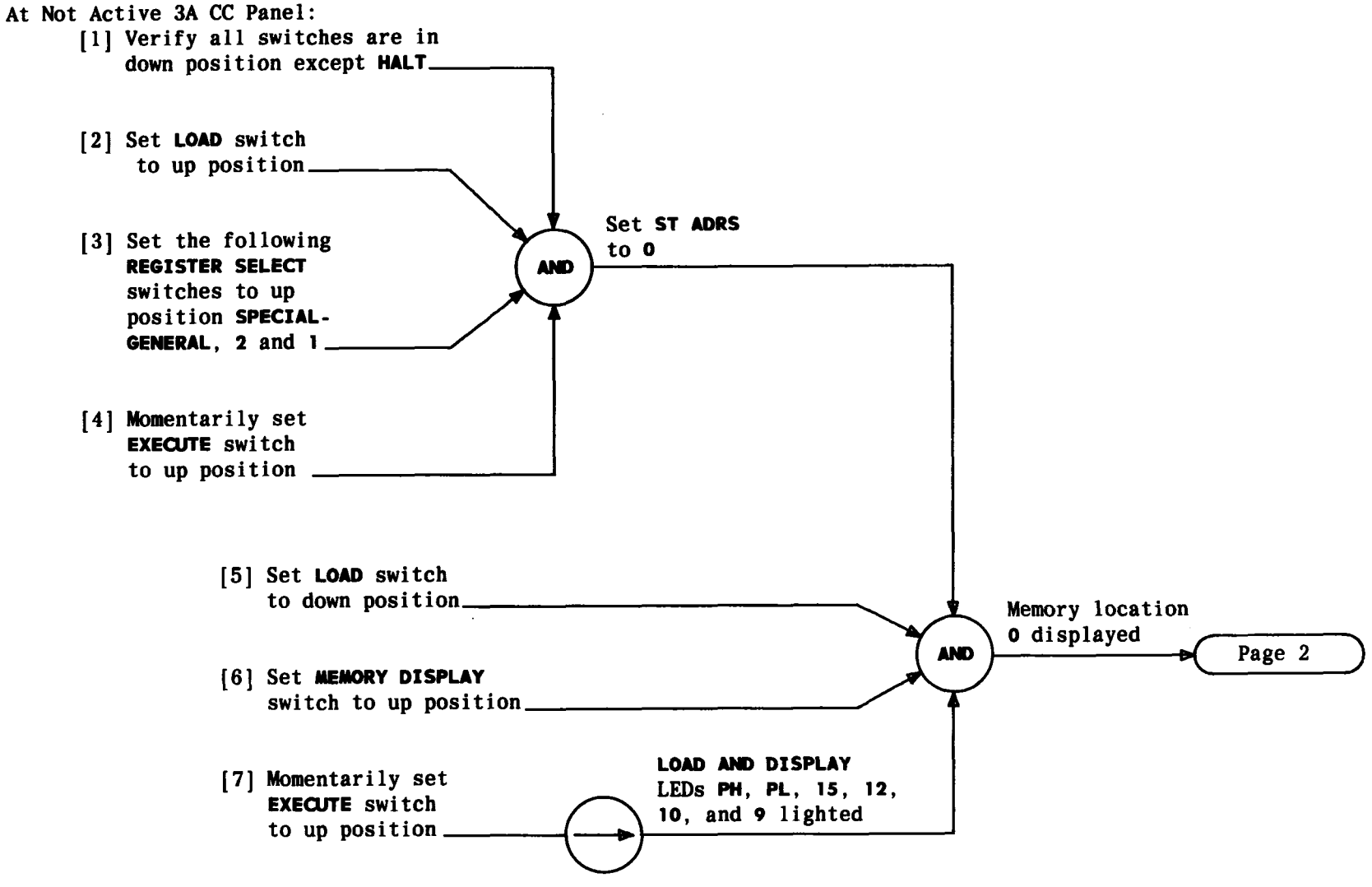

TEST MEMORY FUNCTIONS AND INDICATORS

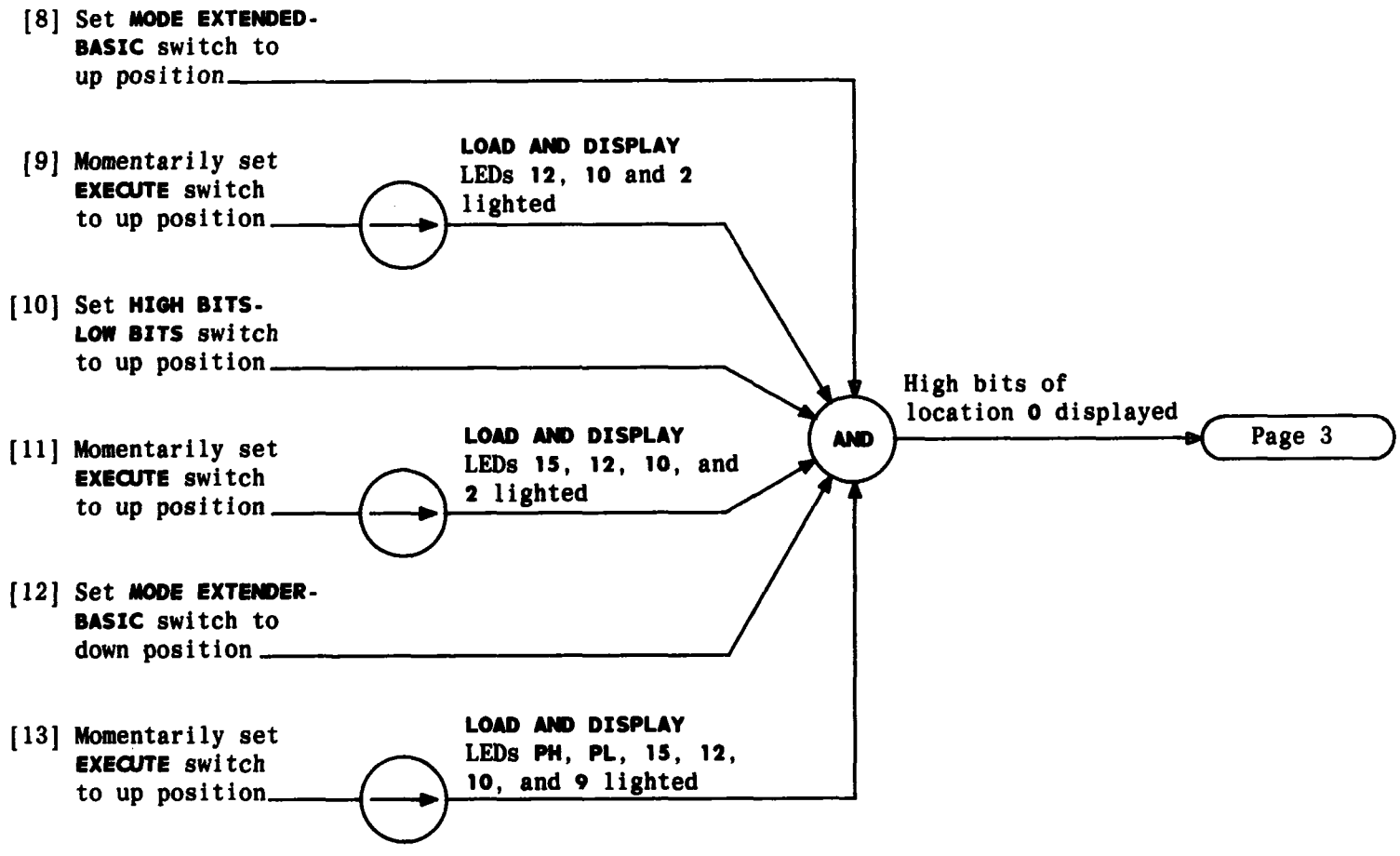

TEST MEMORY FUNCTIONS AND INDICATORS

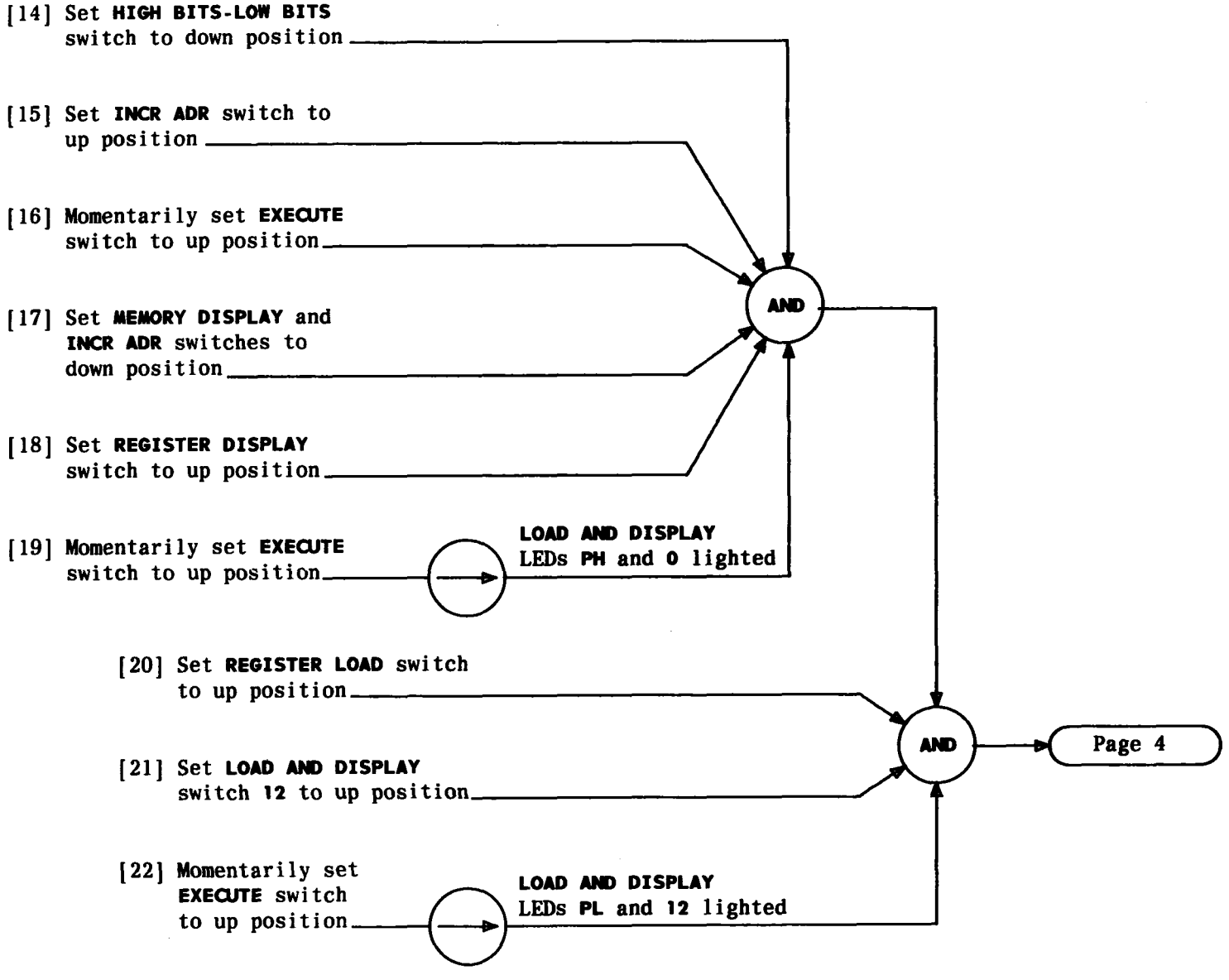

TEST MEMORY FUNCTIONS AND INDICATORS

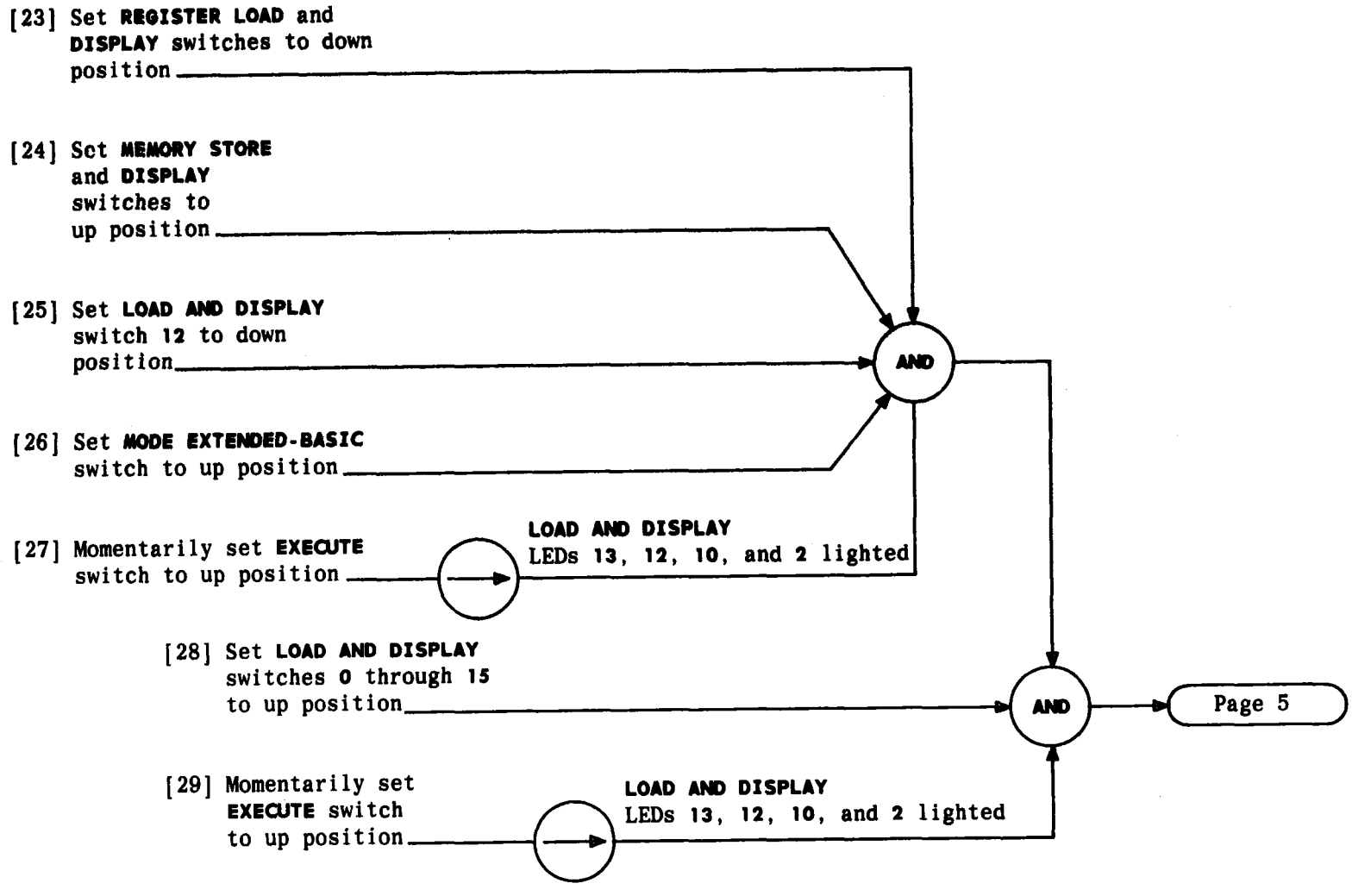

TEST MEMORY FUNCTIONS AND INDICATORS

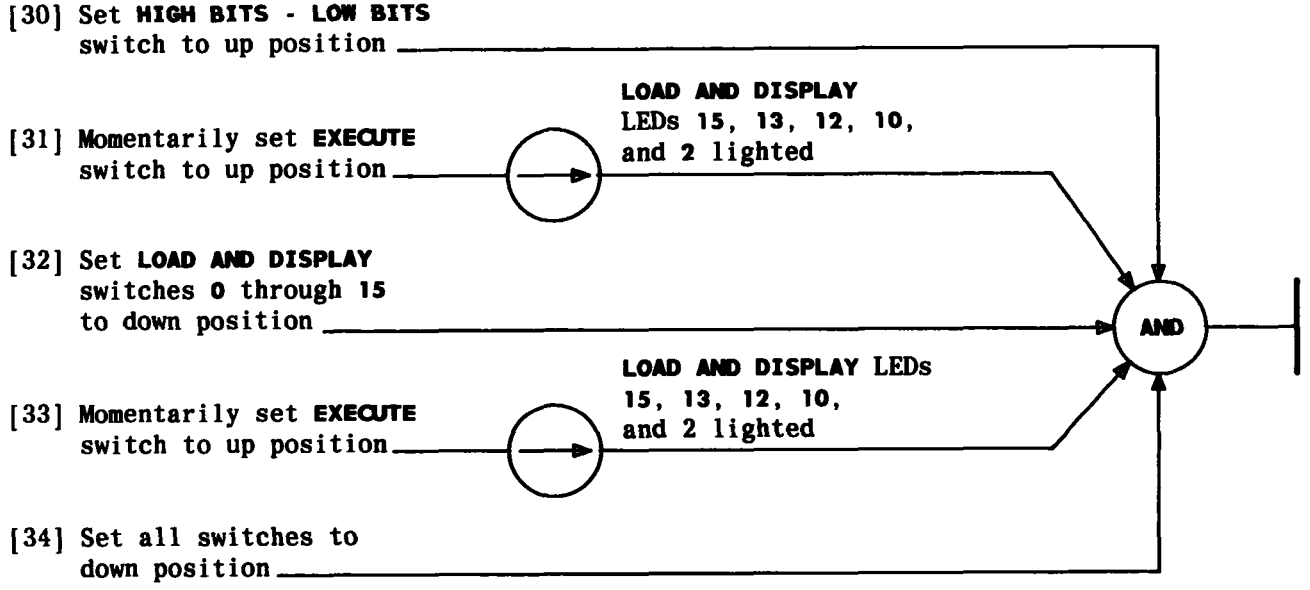

TEST MEMORY FUNCTIONS AND INDICATORS

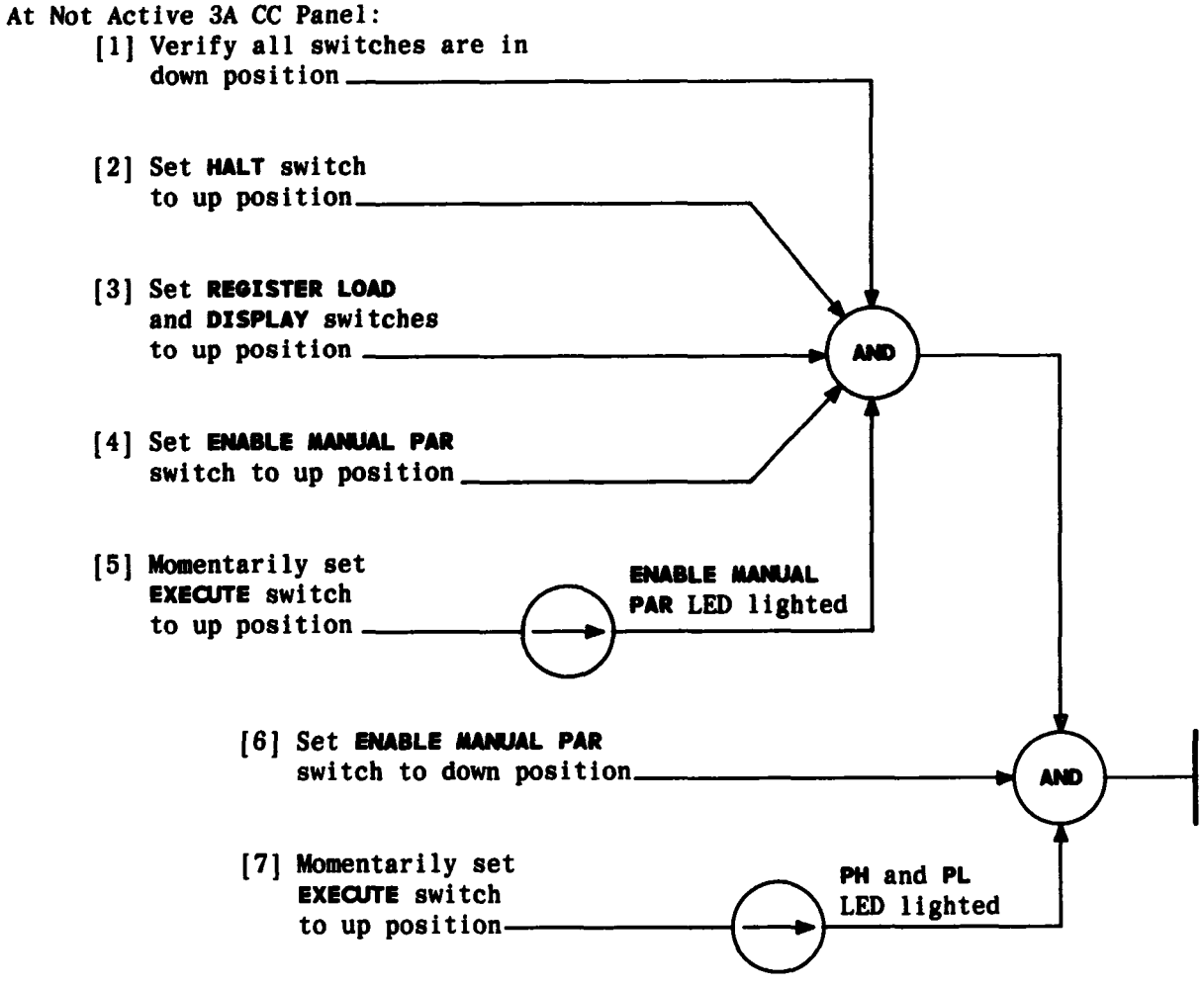

TEST ENABLE MANUAL PARITY FUNCTION AND INDICATOR

At Not Active 3A CC Panel

[1] Verify all switches are in down position except **HALT**

[2] Set **MEMORY DISPLAY** switch to up position

[3] Momentarily set **EXECUTE** switch to up position

[4] Set **MEMORY DISPLAY** switch to down position

[5] Momentarily set **EXECUTE** switch to up position

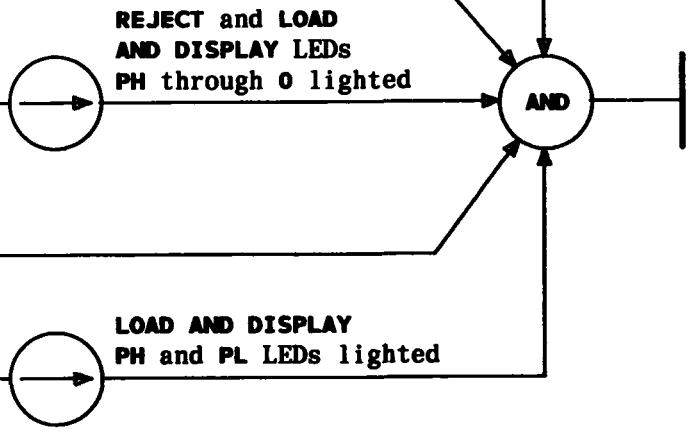

TEST REJECT FUNCTION AND INDICATOR

At SSP:

1. Test Step Function as follows:

1.1 Depress **LOCK** key

At Not Active 3A CC Panel:

1.2 Depress **MANUAL** key at **STATUS** section

1.3 Verify that all panel switches except **HALT** are in down position

1.4 At **REGISTER** section, set **LOAD** and **DISPLAY** switches to up position

1.5 At **REGISTER SELECT** section, set **SPECIAL/GENERAL EXTENDED** switch to **SPECIAL** and switch **4** to up position

Response: **SPECIAL** LED lighted
PROG ADRS LED lighted

1.6 At **LOAD AND DISPLAY** section, set switch **5** to up position

1.7 Momentarily operate **EXECUTE** switch

Response: At **LOAD AND DISPLAY** section:
LEDs **5** and **PH** lighted

1.8 Set all switches except **HALT** to down position

1.9 At **MODE** section, set **STEP** to up position

At TTY:

1.10 Type DMP:ST 000040!

Response: DMP:ST:0000040
a b c d e f g h
a through h = contents of memory

At Not Active 3A CC Panel:

1.11 Momentarily operate **EXECUTE** switch

Response: At **MODE** section:
HALTED LED extinguished momentarily
At **LOAD AND DISPLAY** section:
LEDs lighted corresponding to octal contents of store address 000041 obtained in Step 1.10 (b)

1.12 Momentarily operate **EXECUTE** switch

Response: At **MODE** section:
HALTED LED extinguished momentarily
At **LOAD AND DISPLAY** section:
LEDs lighted corresponding to octal contents of store address 000042 obtained in Step 1.10 (c)

1.13 Set all switches to down position

1.14 Momentarily operate **EXECUTE** switch

1.15 At **STATUS** section, depress **RESET CIRCUITS** key

1.16 At **STATUS** section, depress **MANUAL** to release

At SSP:

1.17 Depress **LOCK** key

End of procedure

TEST STEP FUNCTION

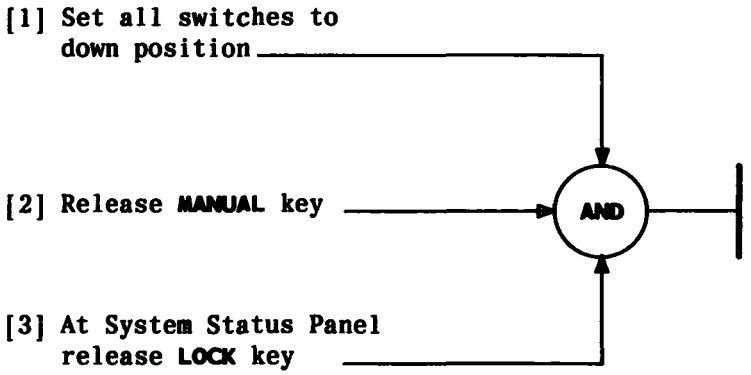

RESTORE SYSTEM CONTROLLER TO NORMAL OPERATING CONDITION

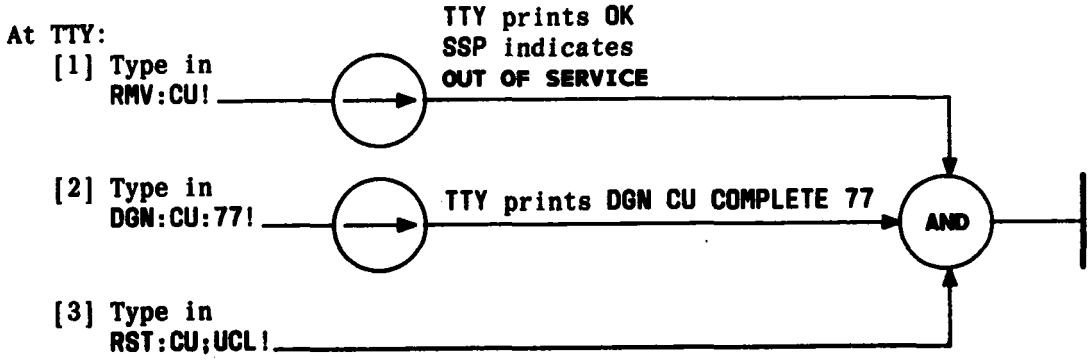

DIAGNOSE SYSTEM STATUS PANEL CONTROLLER

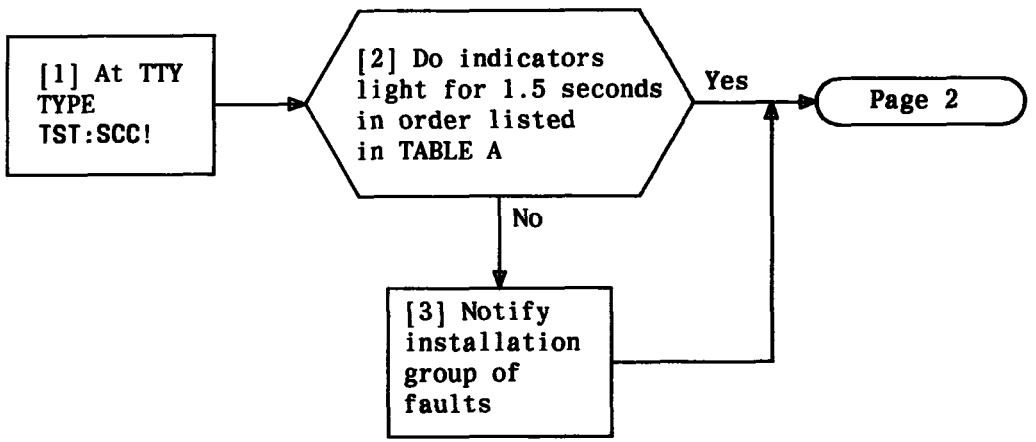

TABLE A		
TTY INIT		MAJOR EQPT LOSS
INIT EXECUTE		MISC
BACKDT OFFICE DATA		AMA
PAST OFFICE DATA		RT
MEMORY RELOAD		PPD
STABLE CALLS		SC
FAIL		NWC
PASS		CU
SERVICE LOSS		FORCED
ALARM CIRCUIT		BLDG
FUSE		DSP
MINOR POWER		OVLD ANN
MAJOR POWER		NRP ACT
MINOR		TDC
MAJOR		TTYC
CRITICAL		SVC LIM
ACTIVE		TRK LIM
STAND BY		0
OUT OF SERVICE	SYC 1	1
UNAVAILABLE		2
ACTIVE		3
STAND BY	SYCO	•
OUT OF SERVICE		•
UNAVAILABLE		•
EXECUTE		19
ALARM TRFR		20
ALARM RELEASE		21
INHIBIT BUILDING ALARM		22
PANEL TIME OUT		23
SYSTEM NORMAL		

TEST SYSTEM STATUS PANEL INDICATORS

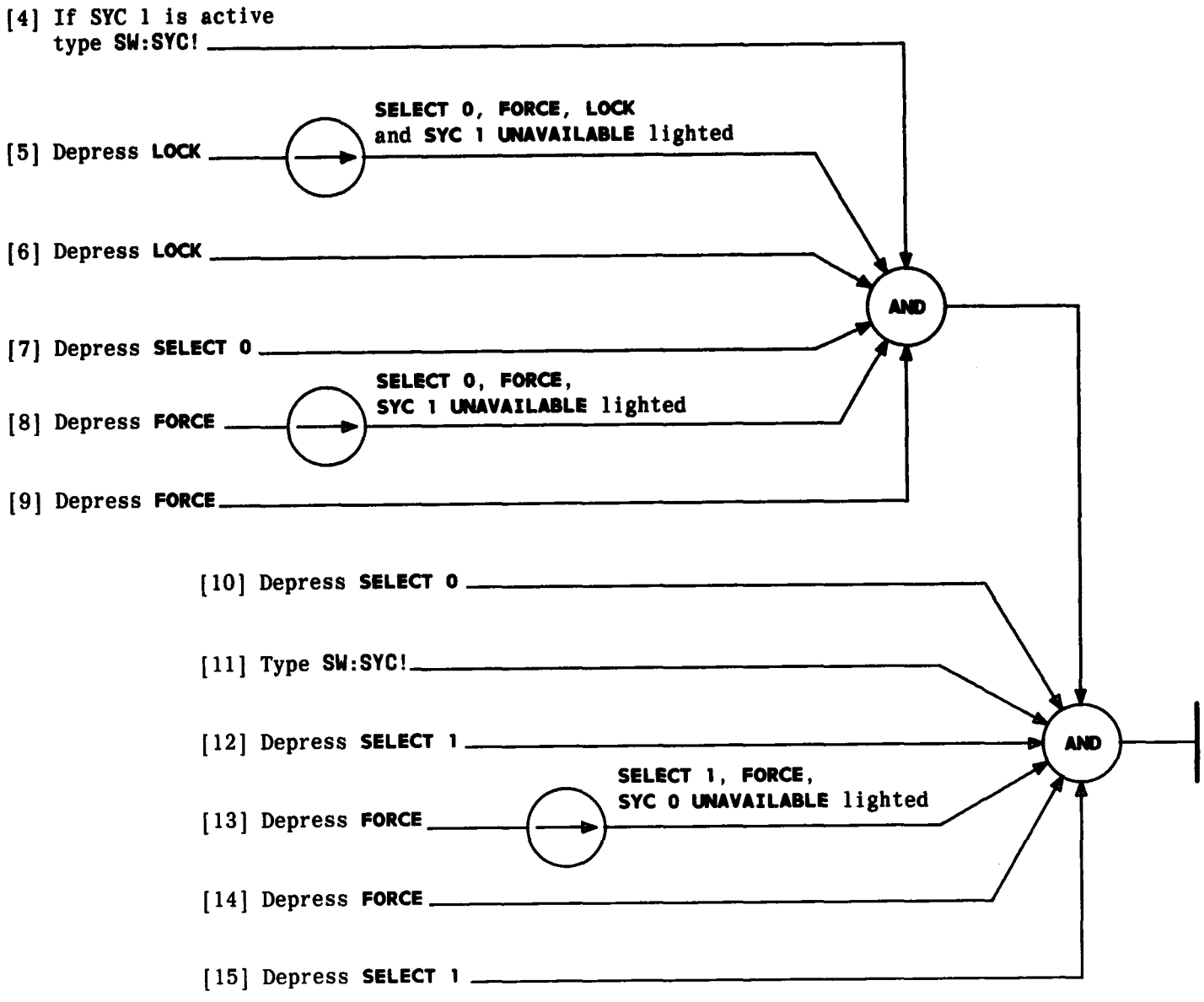

TEST SYSTEM STATUS PANEL INDICATORS

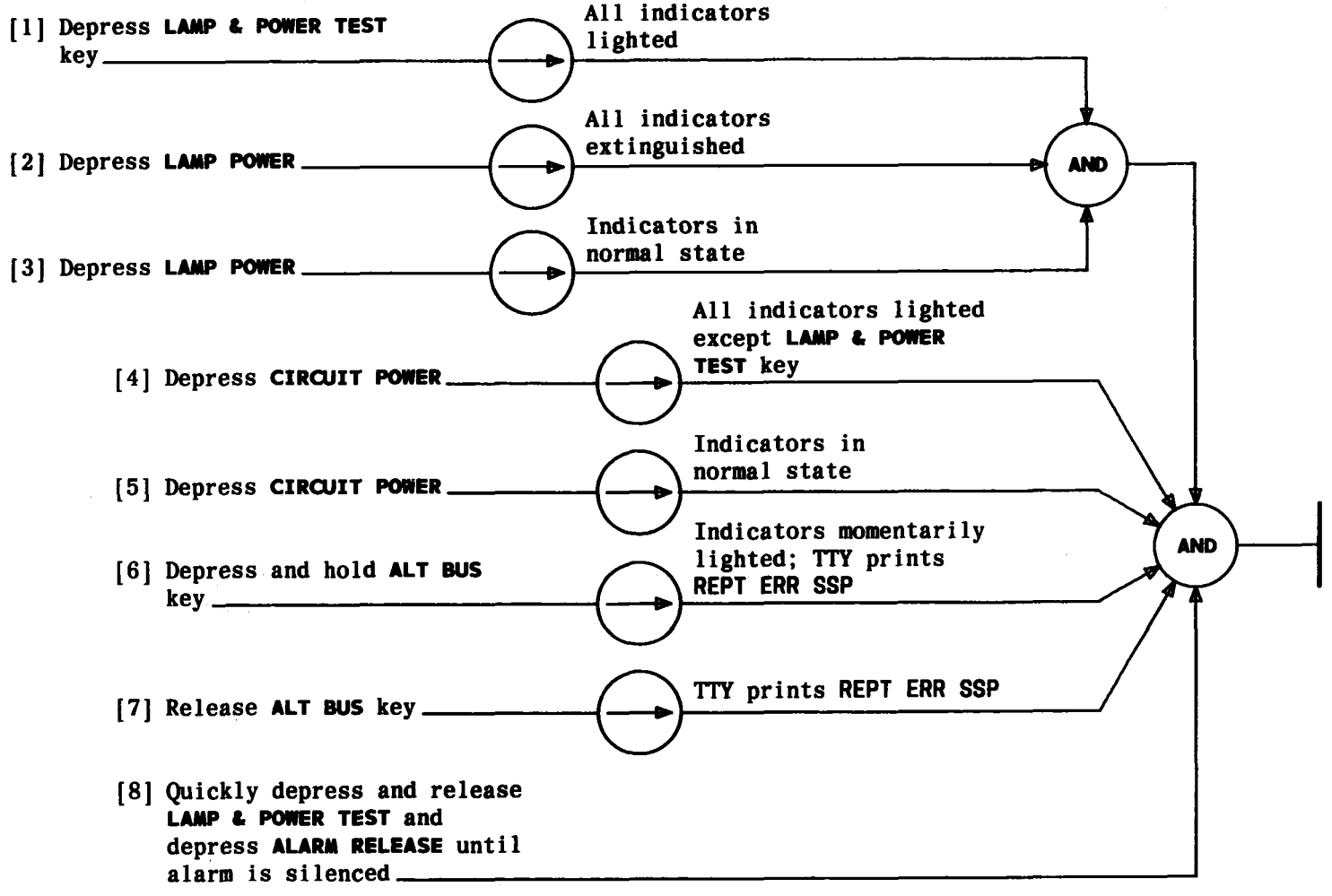

TEST SYSTEM STATUS PANEL POWER CONTROLS

Issue 3	AUG 1984
233-142-100	DLP
PAGE 1 of 1	595

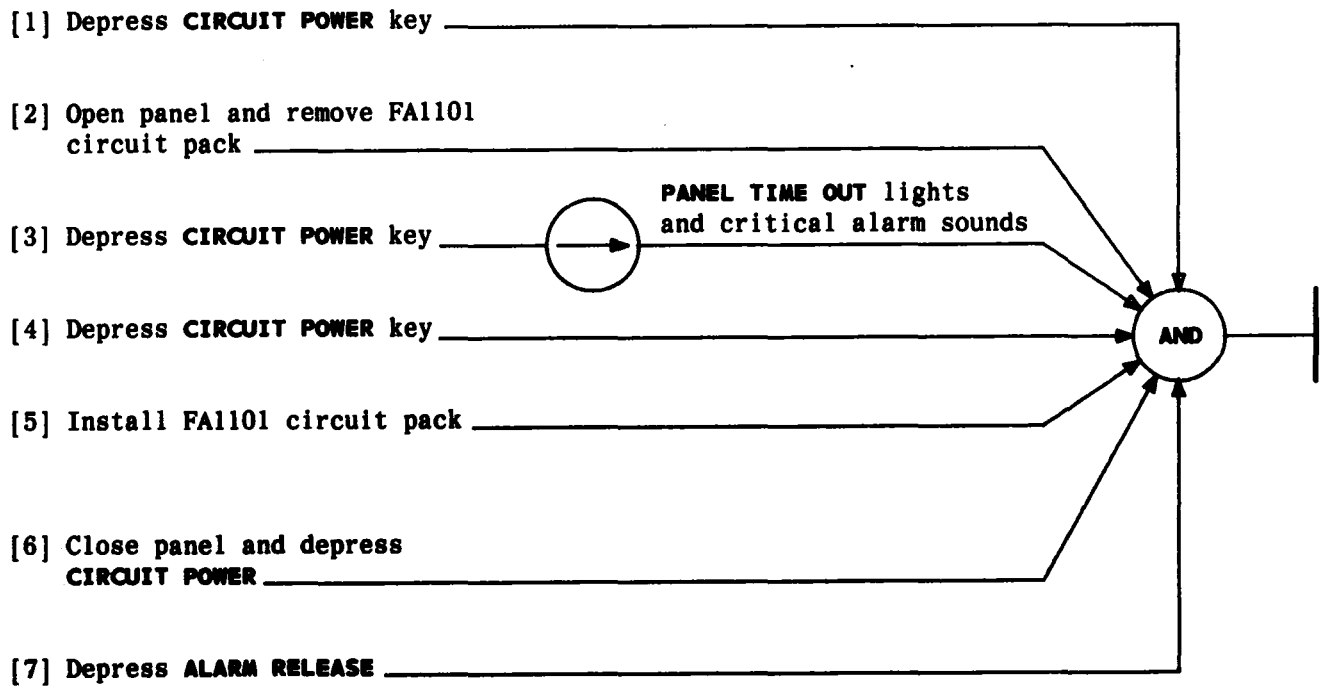

TEST PANEL TIMEOUT FUNCTION

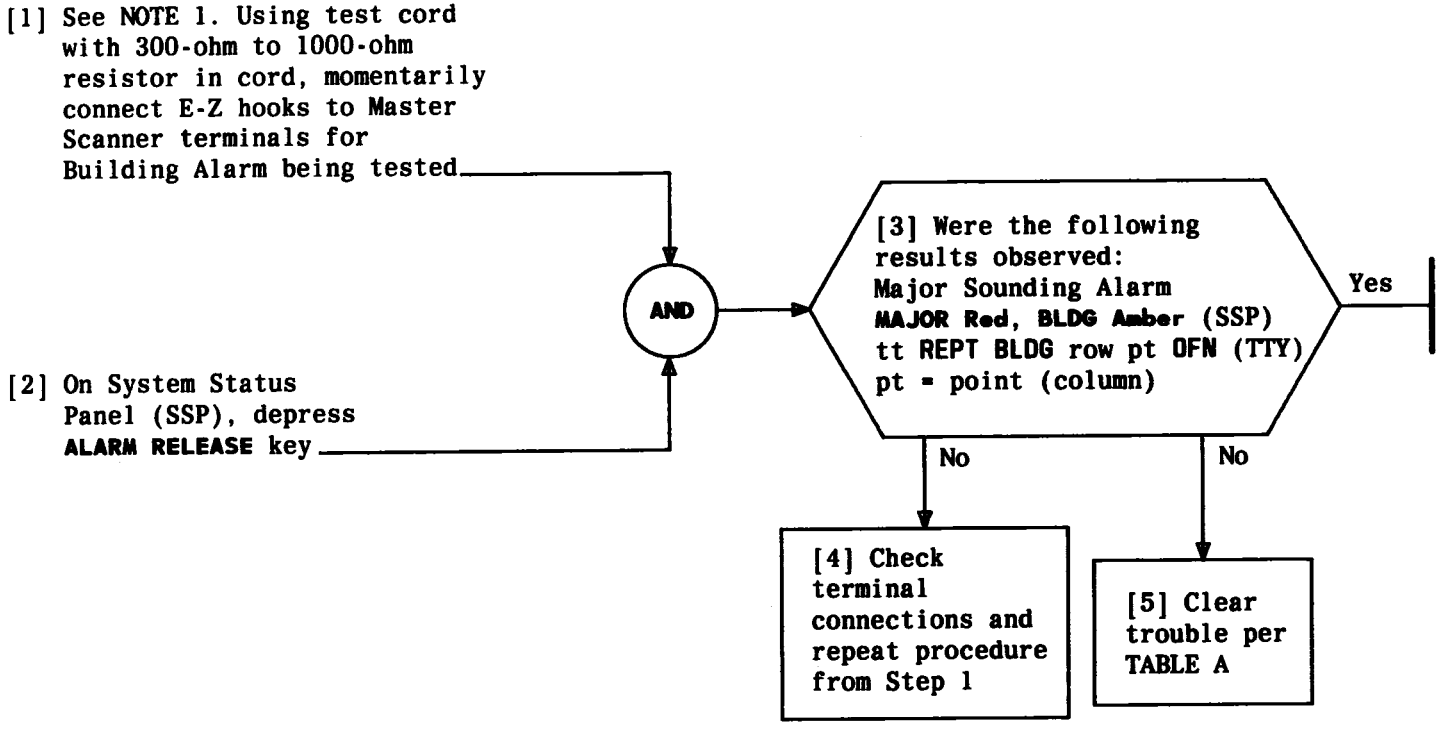

TABLE A

INDICATOR LOCATION	INDICATION NOT OBSERVED	TROUBLE CLEARING DATA
Building	Major Sounding Alarm	TAP-100
SSP	**MAJOR Red, BLDG Amber**	TAP-112
TTY	tt REPT BLDG row pt OFN	TAP-113

NOTE 1
Use care in connecting Master Scanner terminals. Improper connections cause erroneous results

TEST BUILDING ALARMS

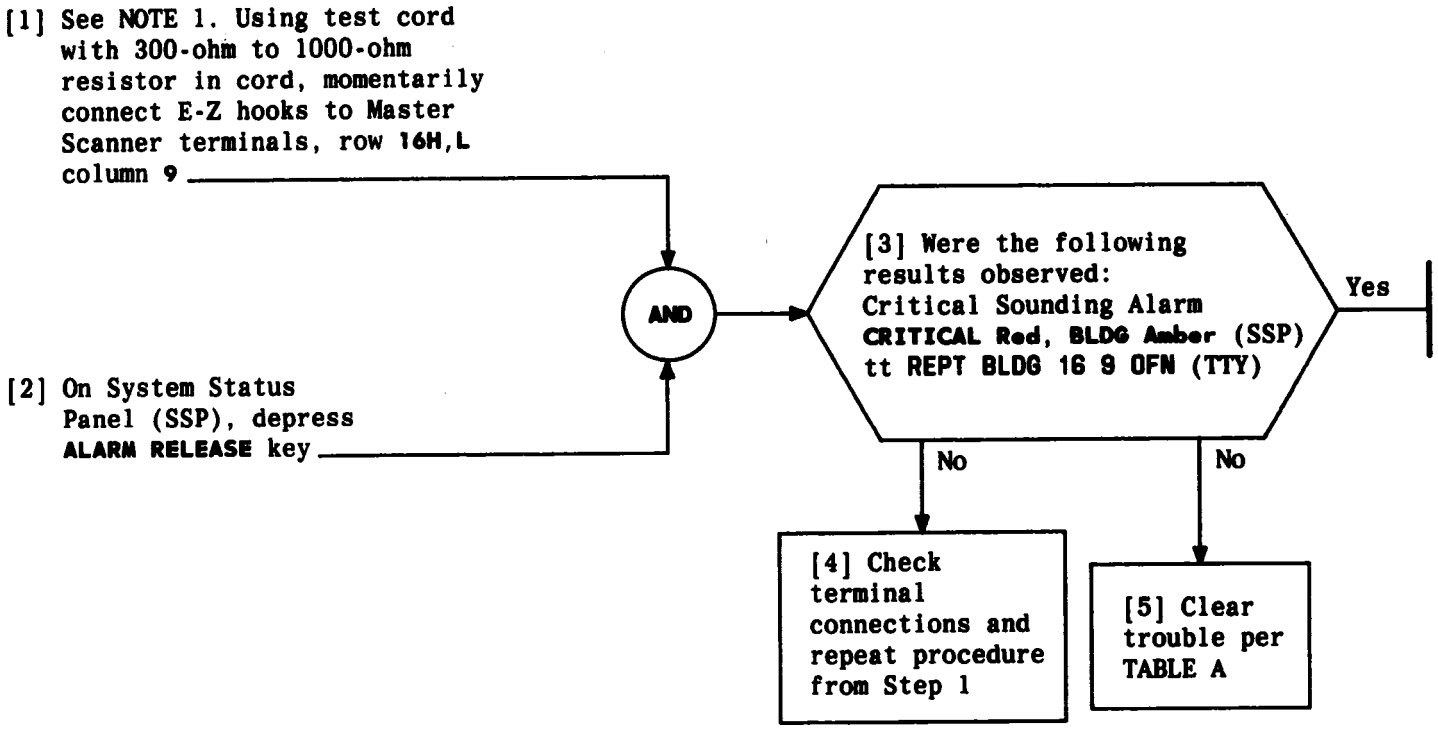

TABLE A

INDICATOR LOCATION	INDICATION NOT OBSERVED	TROUBLE CLEARING DATA
Building	Critical Sounding Alarm	TAP-100
SSP	CRITICAL Red, BLDG Amber	TAP-112
TTY	tt REPT BLDG 16 9 OFN	TAP-113

NOTE 1
Use care in connecting Master Scanner terminals. Improper connections cause erroneous results

TEST FIRE ALARMS

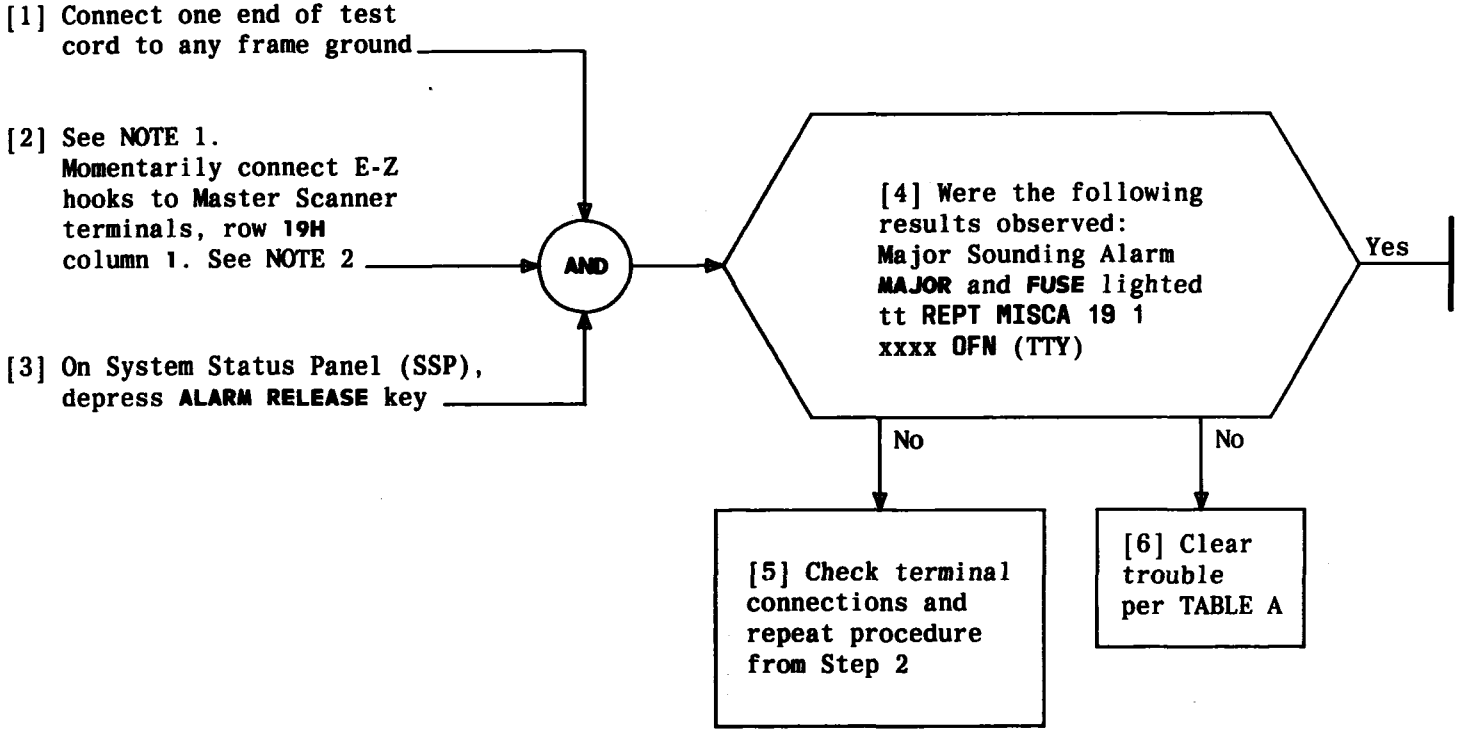

TABLE A		
INDICATOR LOCATION	INDICATION NOT OBSERVED	TROUBLE CLEARING DATA
Building	Major Sounding Alarm	TAP-100
SSP	MAJOR and FUSE lighted	TAP-112
TTY	tt REPT MISCA 19 1 xxxx OFN	TAP-113

NOTES
1. Use care in connecting Master Scanner terminals. Improper connections cause erroneous results
2. If system does not respond to grounding terminal H, ground terminal L

TEST TTY CONTROLLER OUT-OF-SERVICE ALARM

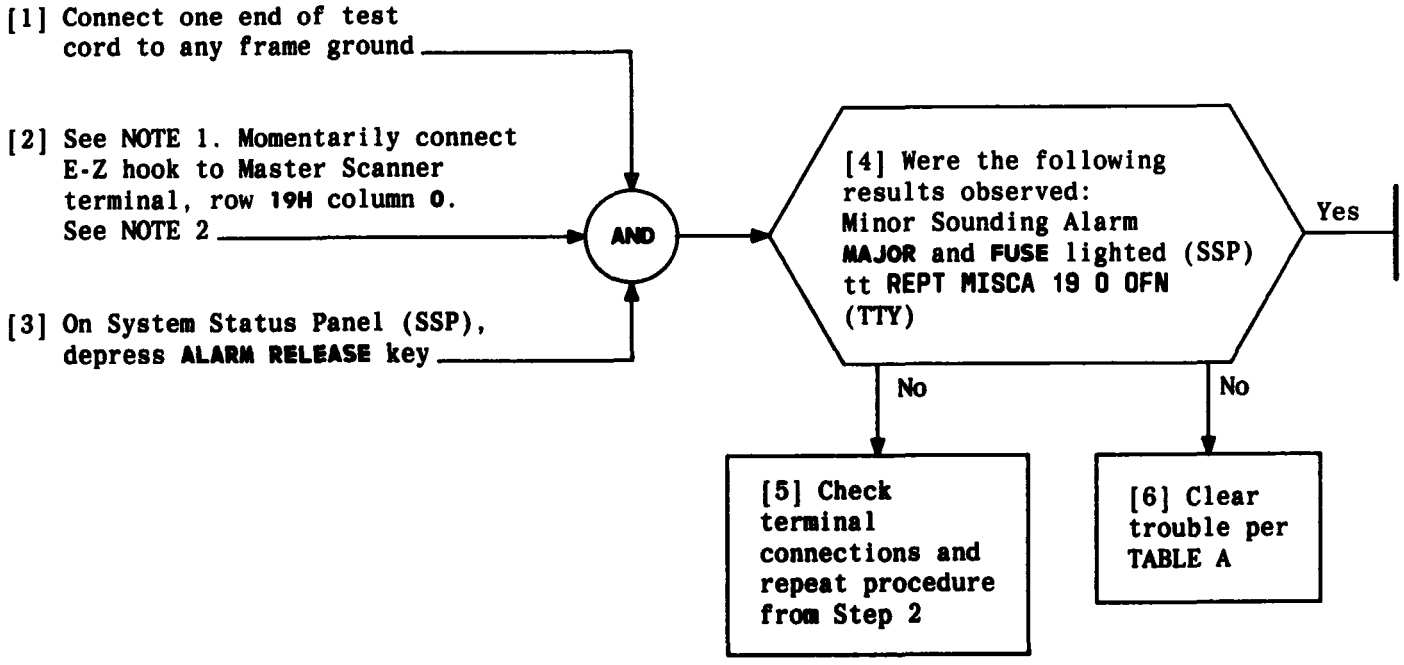

TABLE A

INDICATOR LOCATION	INDICATION NOT OBSERVED	TROUBLE CLEARING DATA
Building	Minor Sounding Alarm	TAP-100
SSP	FUSE and MAJOR lighted	TAP-112
TTY	tt REPT MISCA 19 0 OFN	TAP-113

NOTES

1. Use care in connecting Master Scanner terminals. Improper connections cause erroneous results
2. If system does not respond to grounding terminal H, ground terminal L

TEST TAPE DATA CONTROLLER MAJOR POWER ALARM

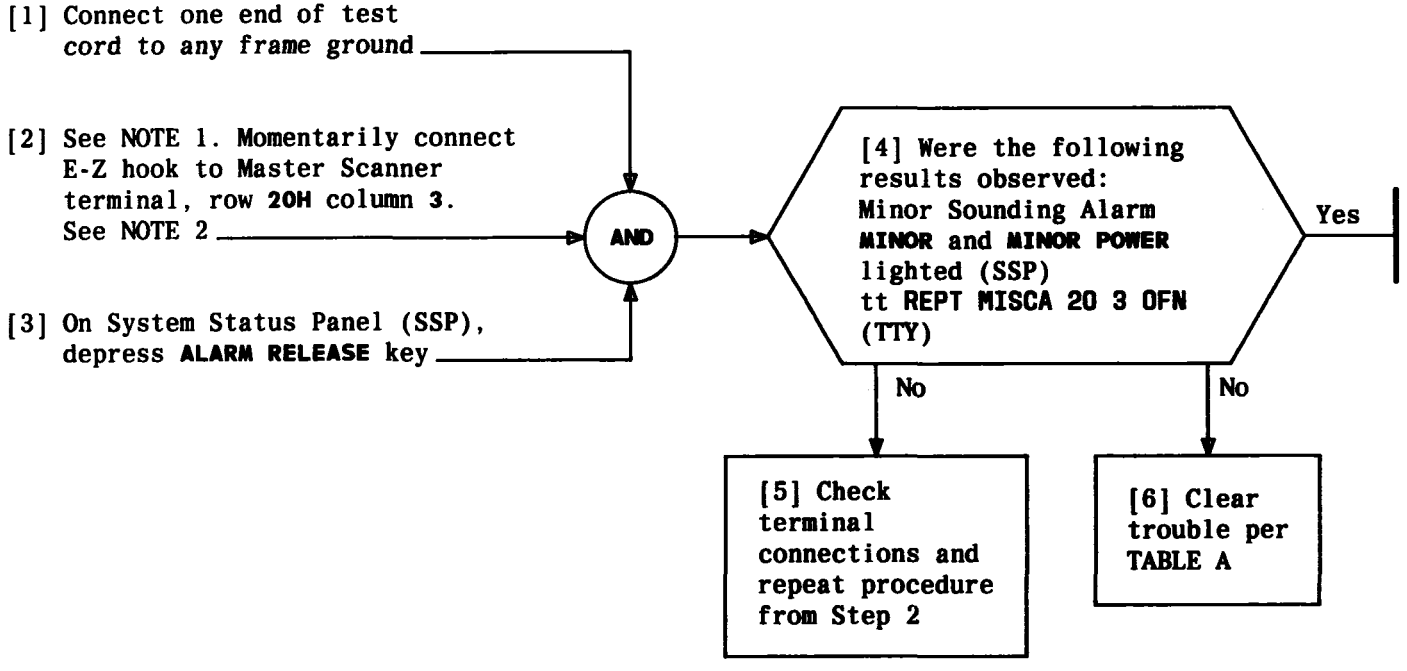

TABLE A

INDICATOR LOCATION	INDICATION NOT OBSERVED	TROUBLE CLEARING DATA
Building	Minor Sounding Alarm	TAP-100
SSP	MINOR and MINOR POWER lighted	TAP-112
TTY	tt REPT MISCA 20 3 OFN	TAP-113

NOTES

1. Use care in connecting Master Scanner terminals. Improper connections cause erroneous results
2. If system does not respond to grounding terminal H, ground terminal L

TEST MAINTENANCE FRAME CONVERTER OUT OF LIMITS ALARM

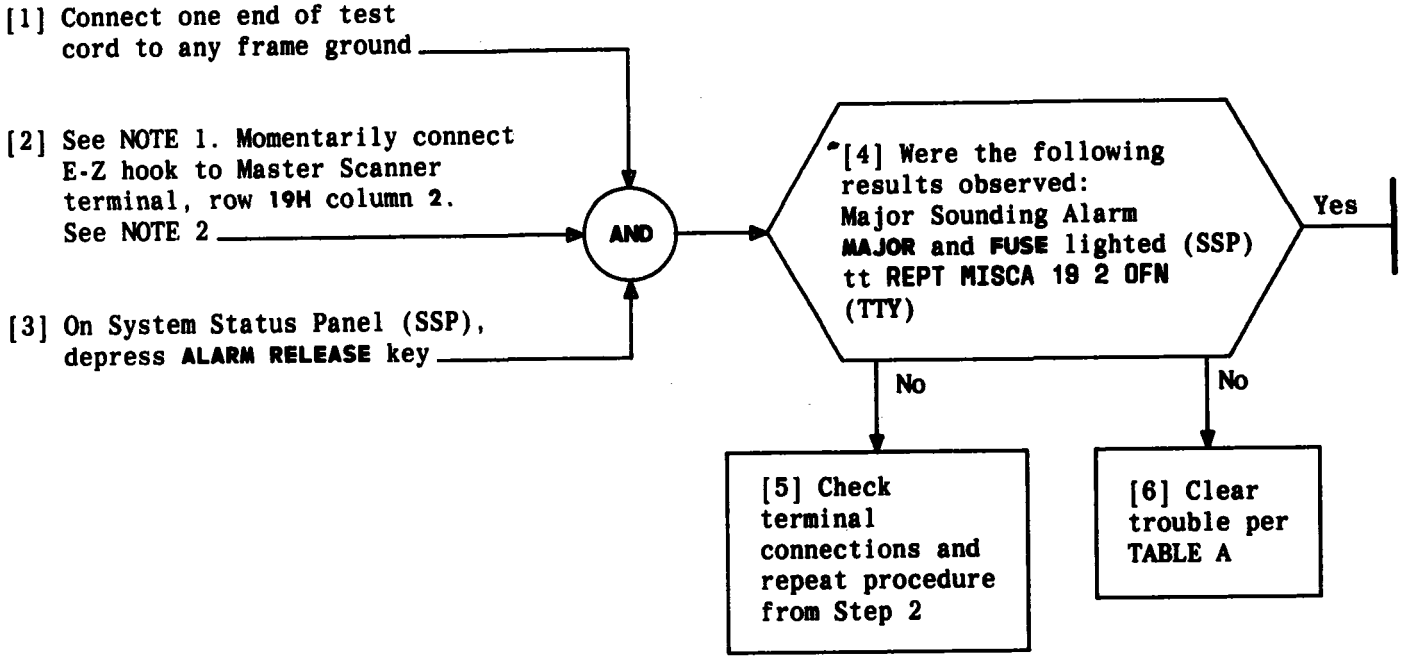

TABLE A		
INDICATOR LOCATION	INDICATION NOT OBSERVED	TROUBLE CLEARING DATA
Building	Major Sounding Alarm	TAP-100
SSP	MAJOR and FUSE lighted	TAP-112
TTY	tt REPT MISCA 19 2 OFN	TAP-113

NOTES

1. Use care in connecting Master Scanner terminals. Improper connections cause erroneous results
2. If system does not respond to grounding terminal H, ground terminal L

TEST SYSTEM STATUS PANEL FUSE ALARM

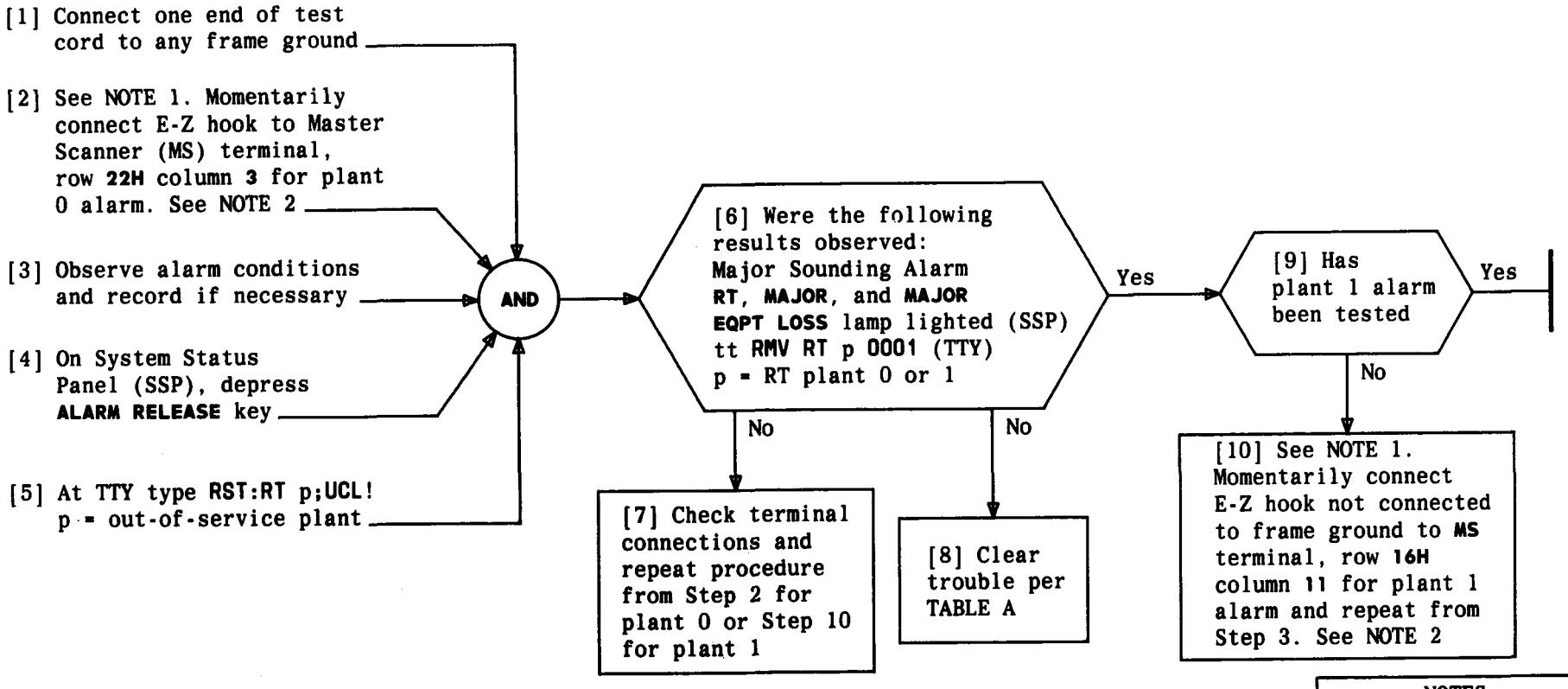

TABLE A		
INDICATOR LOCATION	INDICATION NOT OBSERVED	TROUBLE CLEARING DATA
Building	Major Sounding Alarm	TAP-100
SSP	RT, MAJOR, and MAJOR EQPT LOSS lamp lighted	TAP-112
TTY	tt RMV RT p 0001	TAP-113

NOTES

1. Use care in connecting Master Scanner terminals. Improper connections cause erroneous results
2. If system does not respond to grounding terminal H, ground the L terminal

TEST MANUAL OVERRIDE FORCED ALARM

[1] Connect one end of test cord to any frame ground

[2] See NOTE 1. Momentarily connect E-Z hook to Master Scanner (MS) terminal, row 22H column 5 for plant 0 alarm. See NOTE 2

[3] Observe alarm conditions and record if necessary

[4] On System Status Panel (SSP), depress ALARM RELEASE key

[5] At TTY type RST:RT p;UCL!
p = out-of-service plant

AND

[6] Were the following results observed:
Major Sounding Alarm
RT, MAJOR, and MAJOR EQPT LOSS lamp lighted (SSP)
tt RMV RT p 0004 (TTY)
p = RT plant 0 or 1

Yes

[9] Has plant 1 alarm been tested

Yes

No

[10] See NOTE 1. Momentarily connect E-Z hook not connected to frame ground to MS terminal, row 16H column 13 for plant 1 alarm and repeat from Step 3. See NOTE 2

No

[7] Check terminal connections and repeat procedure from Step 2 for plant 0 or Step 10 for plant 1

No

[8] Clear trouble per TABLE A

TABLE A

INDICATOR LOCATION	INDICATION NOT OBSERVED	TROUBLE CLEARING DATA
Building	Major Sounding Alarm	TAP-100
SSP	RT, MAJOR, and MAJOR EQPT LOSS lamp lighted	TAP-112
TTY	tt RMV RT p 0004	TAP-113

NOTES

1. Use care in connecting Master Scanner terminals. Improper connections cause erroneous results
2. If system does not respond to grounding terminal H, ground the L terminal

TEST RINGER VOLTAGE INVERTER ALARM

TEST FUSE ALARM

[1] Connect one end of test cord to any frame ground

[2] See NOTE 1. Momentarily connect E-Z hook to Master Scanner (MS) terminal, row **22H** column **4** for plant 0 alarm. See NOTE 2

[3] Observe alarm conditions and record if necessary

[4] On System Status Panel (SSP), depress **ALARM RELEASE** key

[5] At TTY type RST:RT p;UCL!
p = out-of-service plant

AND

[6] Were the following results observed:
Major Sounding Alarm
RT, **MAJOR**, and **MAJOR EQPT LOSS** lamp lighted (SSP)
tt **RMV RT p 0002** (TTY)
p = RT plant 0 or 1

Yes

[9] Has plant 1 alarm been tested

Yes

No

[10] See NOTE 1. Momentarily connect E-Z hook not connected to frame ground to **MS** terminal, row **16H** column **12** for plant 1 alarm and repeat from Step 3. See NOTE 2

No

[7] Check terminal connections and repeat procedure from Step 2 for plant 0 or Step 10 for plant 1

No

[8] Clear trouble per TABLE A

TABLE A

INDICATOR LOCATION	INDICATION NOT OBSERVED	TROUBLE CLEARING DATA
Building	Major Sounding Alarm	TAP-100
SSP	**RT**, **MAJOR**, and **MAJOR EQPT LOSS** lamp lighted	TAP-112
TTY	tt RMV RT p 0002	TAP-113

NOTES

1. Use care in connecting Master Scanner terminals. Improper connections cause erroneous results
2. If system does not respond to grounding terminal **H**, ground the **L** terminal

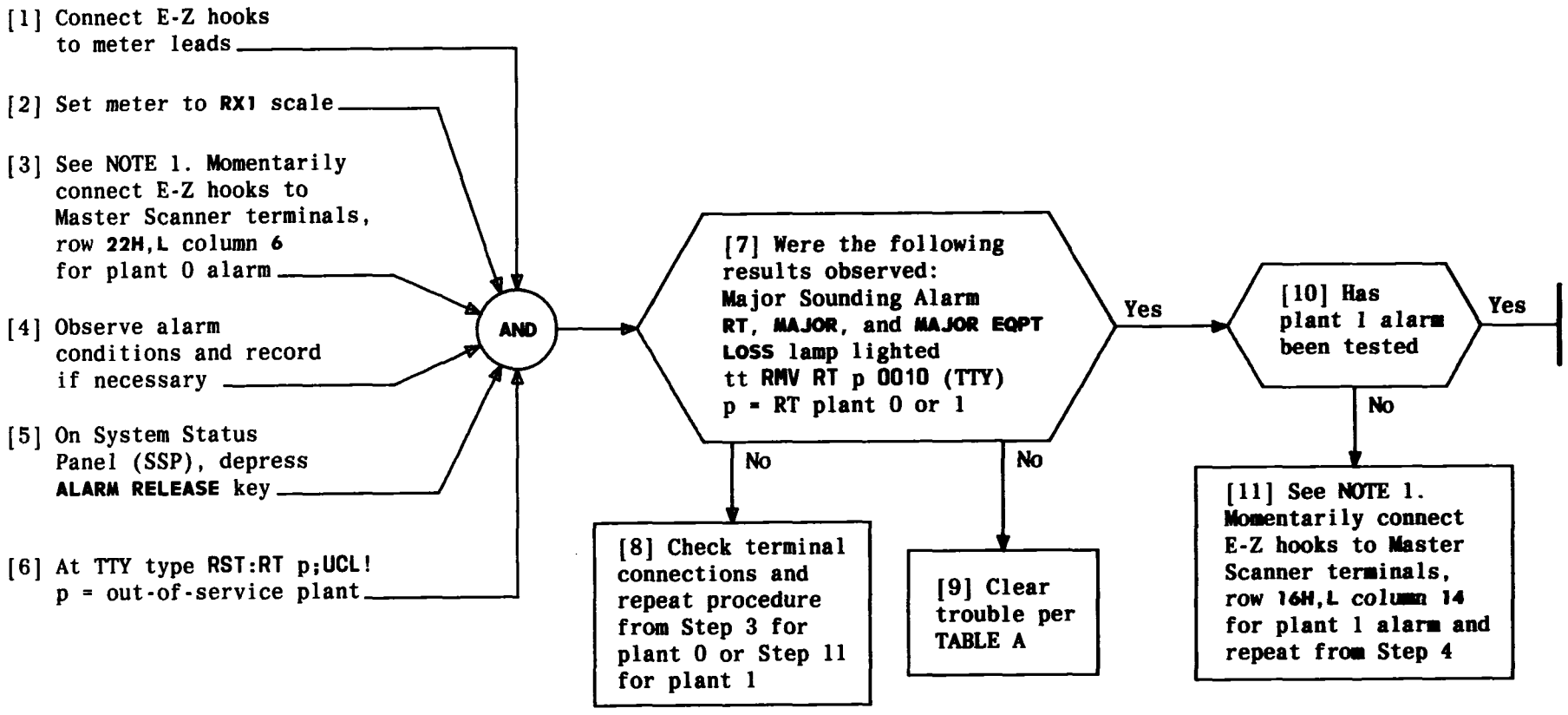

TABLE A		
INDICATOR LOCATION	INDICATION NOT OBSERVED	TROUBLE CLEARING DATA
Building	Major Sounding Alarm	TAP-100
SSP	RT, MAJOR, and MAJOR EQPT LOSS lamp lighted	TAP-112
TTY	tt RMV RT p 0010	TAP-113

NOTE 1
Use care in connecting Master Scanner terminals. Improper connections cause erroneous results

TEST TOUCH-TONE® LOW VOLTAGE ALARM

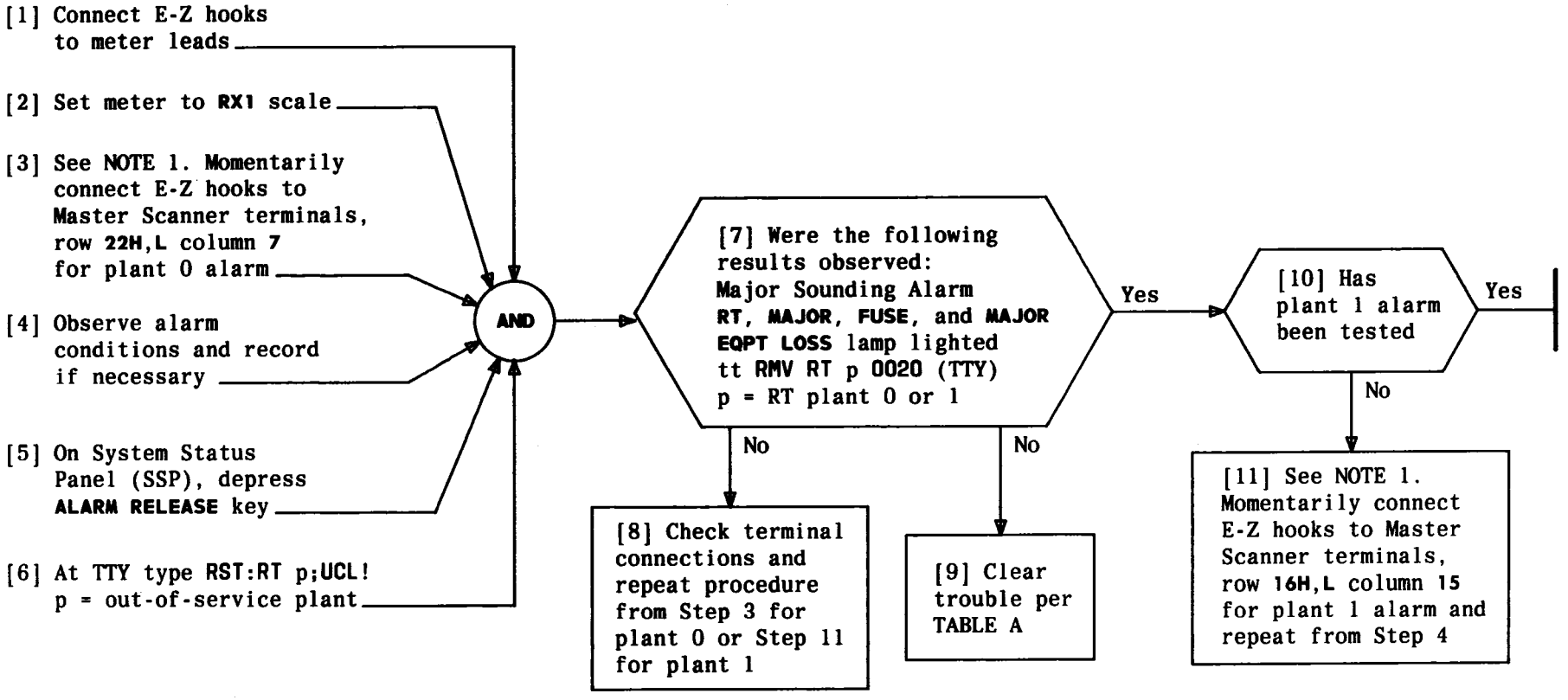

TABLE A

INDICATOR LOCATION	INDICATION NOT OBSERVED	TROUBLE CLEARING DATA
Building	Major Sounding Alarm	TAP-100
SSP	RT, MAJOR, FUSE, and MAJOR EQPT LOSS lamp lighted	TAP-112
TTY	tt RMV RT p 0020	TAP-113

NOTE 1
Use care in connecting Master Scanner terminals. Improper connections cause erroneous results

TEST LOW TONE VOLTAGE ALARM

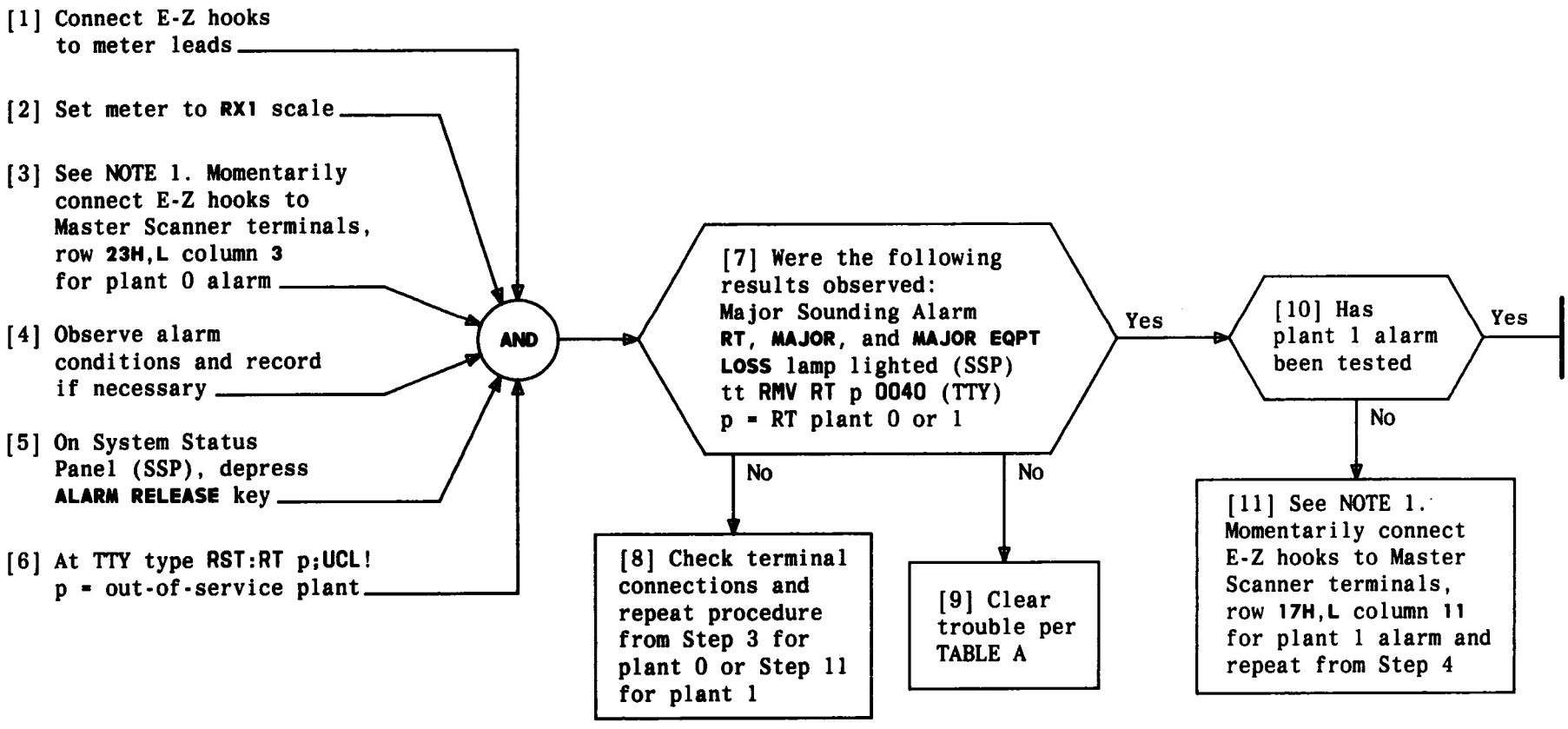

TABLE A

INDICATOR LOCATION	INDICATION NOT OBSERVED	TROUBLE CLEARING DATA
Building	Major Sounding Alarm	TAP-100
SSP	RT, MAJOR, and MAJOR EQPT LOSS lamp lighted	TAP-112
TTY	tt RMV RT p 0040	TAP-113

NOTE 1

Use care in connecting Master Scanner terminals. Improper connections cause erroneous results

TEST AUDIBLE RING ALARM

[1] Connect E-Z hooks to meter leads

[2] Set meter to **RX1** scale

[3] See NOTE 1. Momentarily connect E-Z hooks to Master Scanner terminals, row **23H,L** column **4** for plant 0 alarm

[4] Observe alarm conditions and record if necessary

[5] On System Status Panel (SSP), depress **ALARM RELEASE** key

[6] At TTY type RST:RT p;UCL!
p = out-of-service plant

AND

[7] Were the following results observed:
Major Sounding Alarm
RT, MAJOR, and **MAJOR EQPT LOSS** lamp lighted (SSP)
tt **RMV RT** p **0100** (TTY)
p = RT plant 0 or 1

Yes

[10] Has plant 1 alarm been tested

Yes

No

[11] See NOTE 1. Momentarily connect E-Z hooks to Master Scanner terminals, row **17H,L** column **12** for plant 1 alarm and repeat from Step 4

No

[8] Check terminal connections and repeat procedure from Step 3 for plant 0 or Step 11 for plant 1

No

[9] Clear trouble per TABLE A

TABLE A

INDICATOR LOCATION	INDICATION NOT OBSERVED	TROUBLE CLEARING DATA
Building	Major Sounding Alarm	TAP-100
SSP	**RT, MAJOR,** and **MAJOR EQPT LOSS** lamp lighted	TAP-112
TTY	tt RMV RT p 0100	TAP-113

NOTE 1
Use care in connecting Master Scanner terminals. Improper connections cause erroneous results

TEST HIGH TONE LOW VOLTAGE ALARM

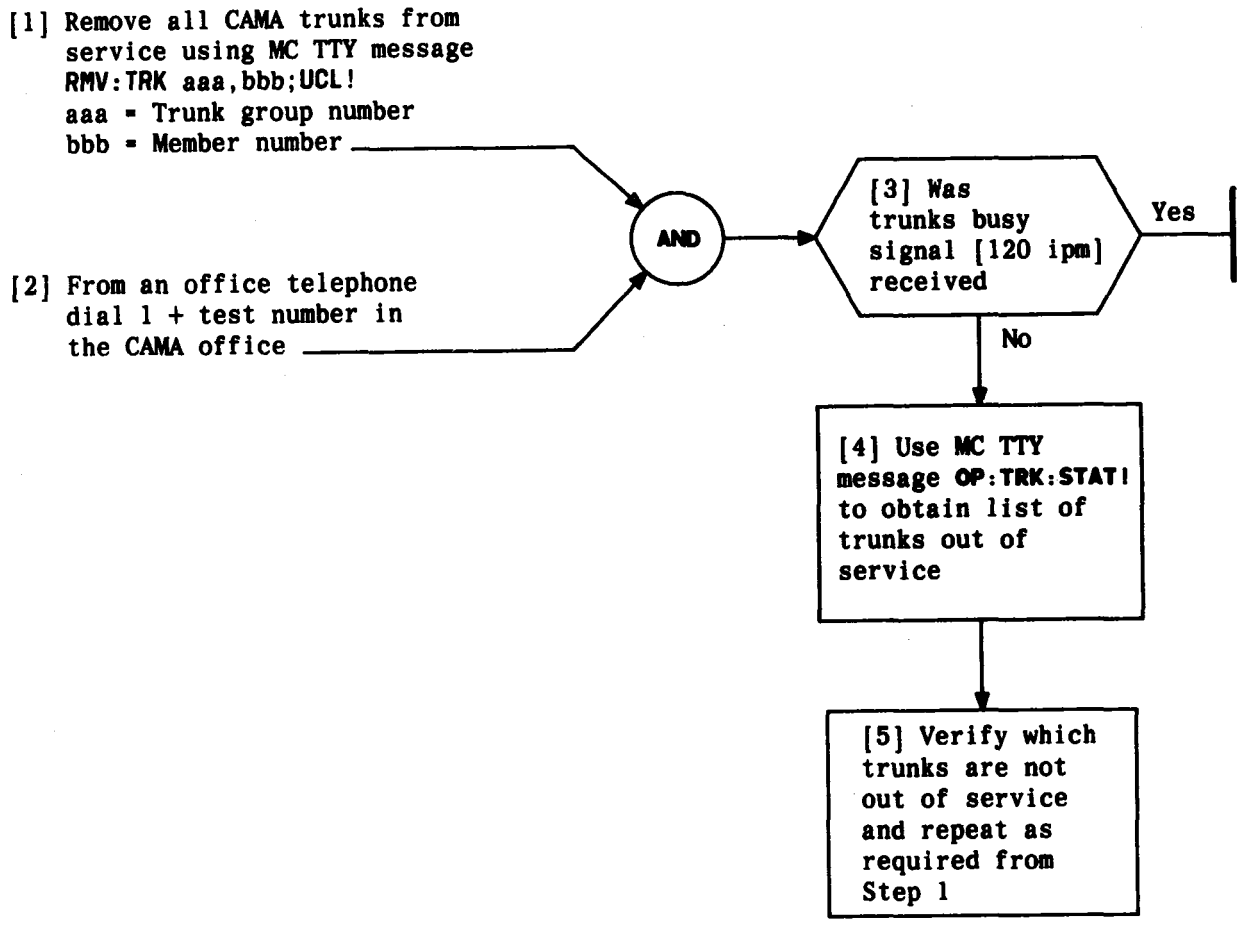

MAKE ALL TRUNKS BUSY TEST

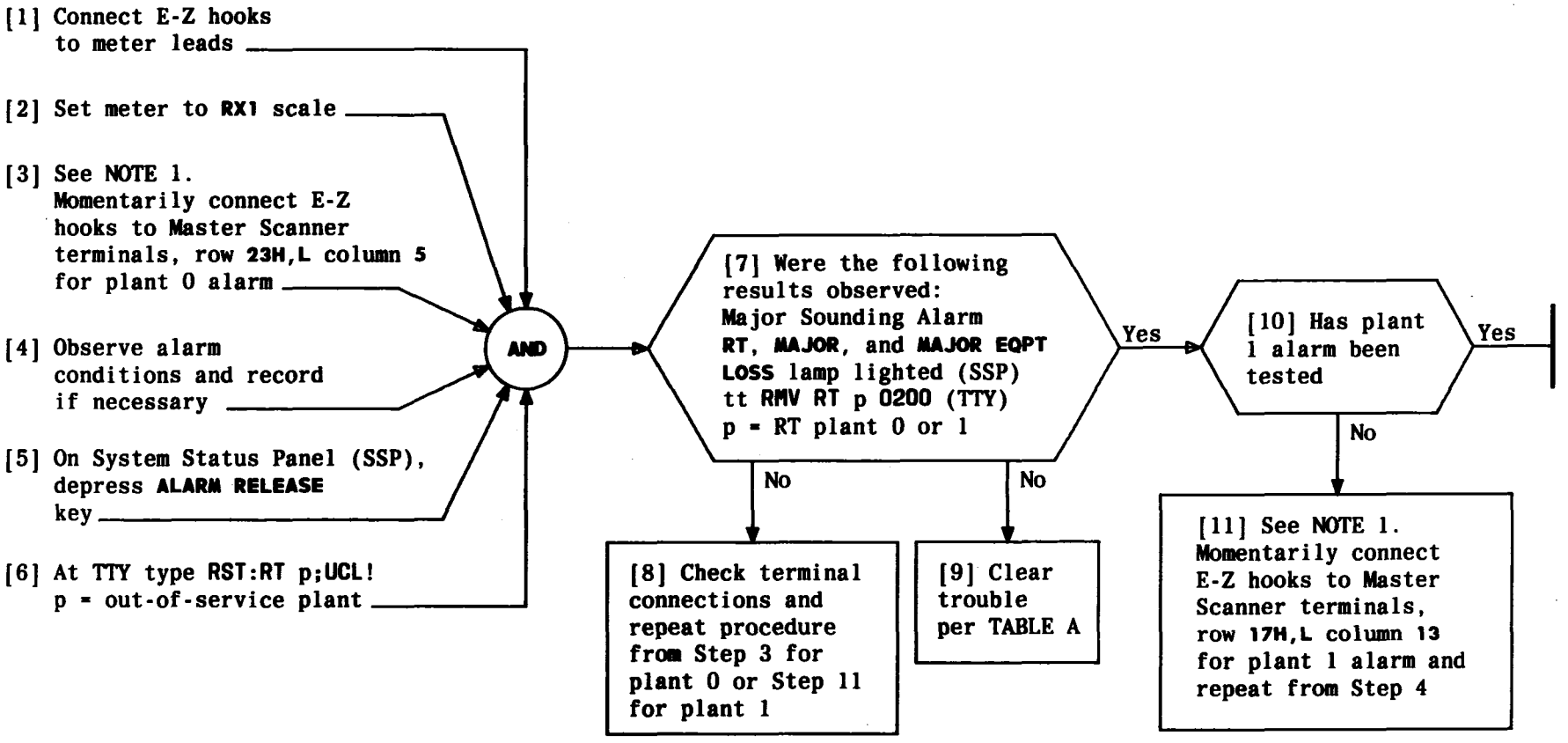

TABLE A

INDICATOR LOCATION	INDICATION NOT OBSERVED	TROUBLE CLEARING DATA
Building	Major Sounding Alarm	TAP-100
SSP	RT, MAJOR, and MAJOR EQPT LOSS lamp lighted	TAP-112
TTY	tt RMV RT p 0200	TAP-113

NOTE 1
Use care in connecting Master Scanner Terminals. Improper connections cause erroneous results

TEST CALL WAITING LOW VOLTAGE

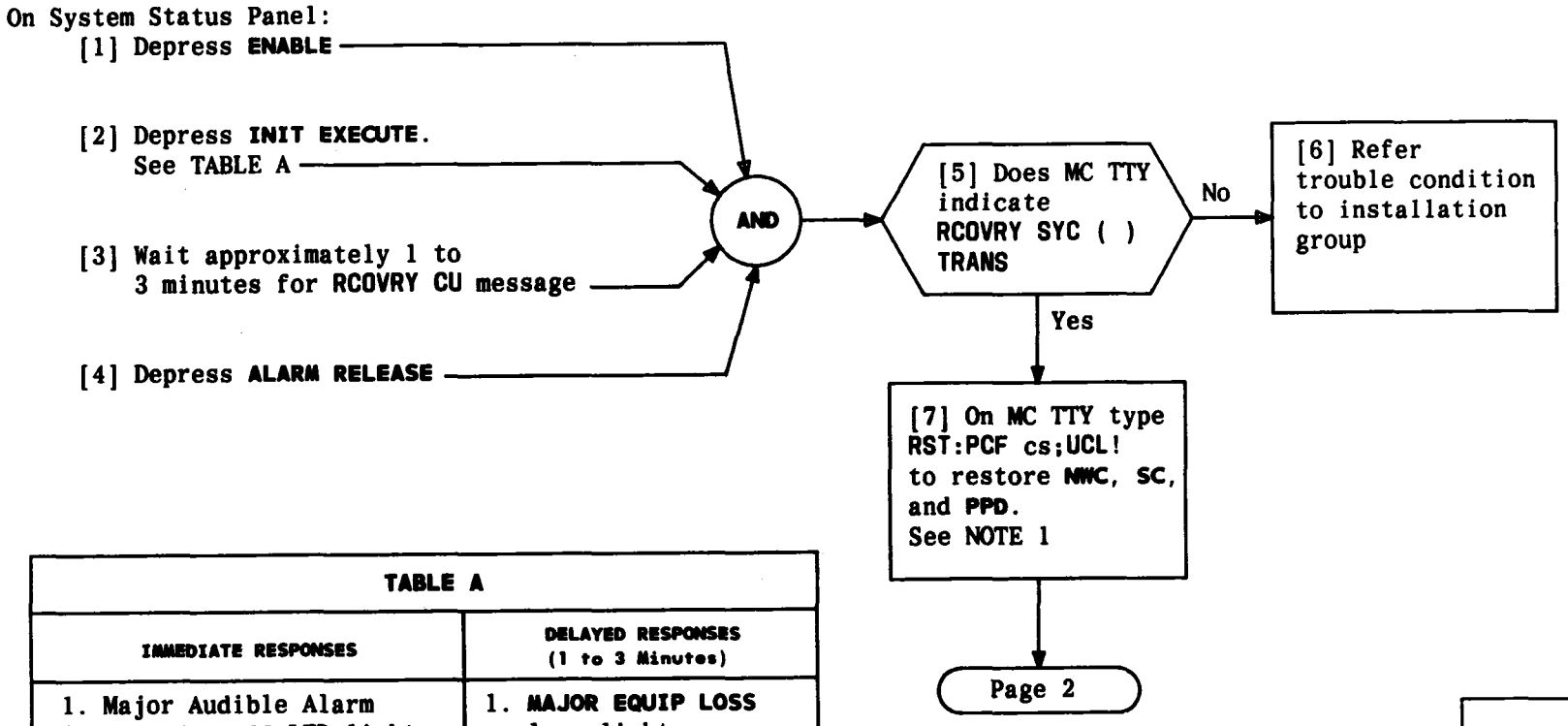

TABLE A	
IMMEDIATE RESPONSES	**DELAYED RESPONSES (1 to 3 Minutes)**
1. Major Audible Alarm 2. **SERVICE LOSS** LED lights	1. **MAJOR EQUIP LOSS** lamp lights 2. **SYC ( ) OUT OF SERVICE** LED lights 3. **CU, NWC, SC, PPD** LEDs light 4. **SYSTEM NORMAL** lamp goes off

NOTE 1
c = Peripheral control frame number
s = SYC or side to be restored
Offices having two control frames will be required to type RST:PCF message twice to restore both peripheral control frames

INITIALIZE SYSTEM FROM SSP USING MANUAL TRANSIENT CLEAR

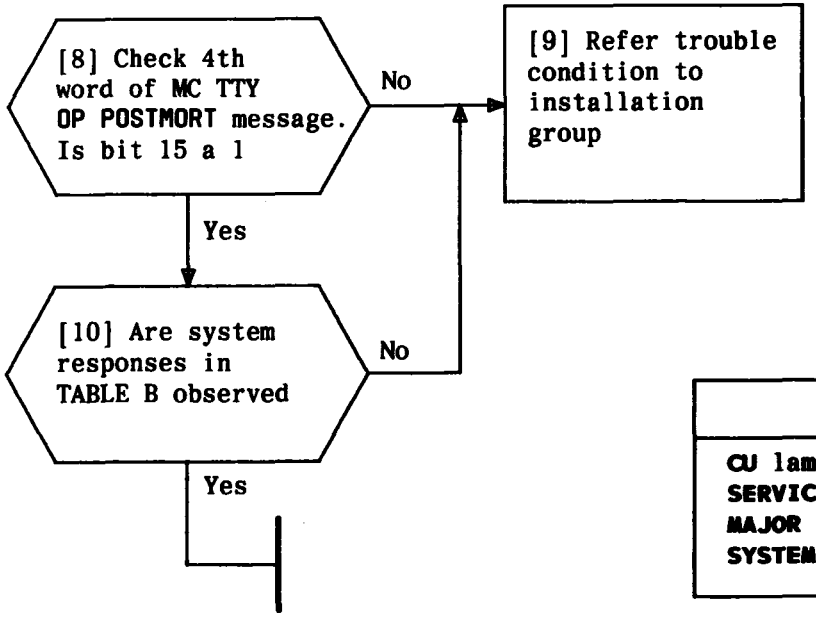

TABLE B
CU lamp goes off
SERVICE LOSS lamp goes off
MAJOR EQUIP LOSS lamp goes off
SYSTEM NORMAL lamp lights

INITIALIZE SYSTEM FROM SSP USING MANUAL TRANSIENT CLEAR

On System Status Panel:

[1] Depress **ENABLE**

[2] Depress **STABLE CALLS**

[3] Depress **INIT EXECUTE**. See TABLE A for results

[4] Wait approximately 1 to 3 minutes for **RCOVRY CU** message

[5] Depress **ALARM RELEASE**

AND

[6] Does MC TTY indicate **RCOVRY SYC ( ) STABLE**

No

[7] Refer trouble condition to installation group

Yes

[8] On MC TTY type **RST:PCF cs;UCL!** to restore **NWC**, **SC**, and **PPD**. See NOTE 1

Page 2

TABLE A	
IMMEDIATE RESPONSES	**DELAYED RESPONSES** (Approximately 1 to 3 Minutes)
1. Audible Critical alarm 2. **FORCED** LED lights 3. **SERVICE LOSS** LED lights	1. **CRITICAL** LED lights 2. **SYC ( ) OUT OF SERVICE** LED lights 3. **MAJOR EQUIP LOSS** lamp lights 4. **CU**, **NWC**, **SC**, **PPD** LEDs light 5. **SYSTEM NORMAL** lamp goes off

NOTE 1

c = Peripheral control frame number

s = SYC or side to be restored

Offices having two control frames will be required to type RST:PCF message twice to restore both peripheral control frames

INITIALIZE SYSTEM FROM SSP USING STABLE CLEAR

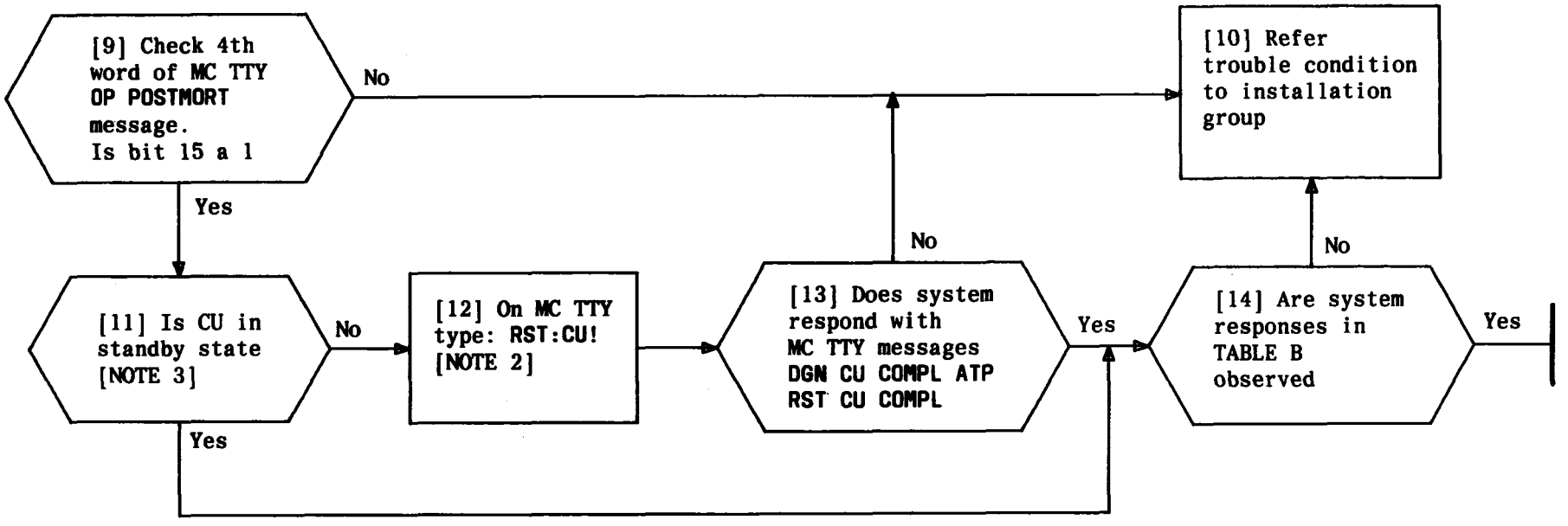

TABLE B
CU LED goes off
SERVICE LOSS LED goes off
MAJOR EQUIP LOSS lamp goes off
SYSTEM NORMAL lamp lights

NOTES

2. RST:CU message will automatically cause CU diagnostics to be run, which will require several minutes. When completed, alarm will sound two times
3. On System Status Panel when CU lamp goes off, CU is in standby state

INITIALIZE SYSTEM FROM SSP USING STABLE CLEAR

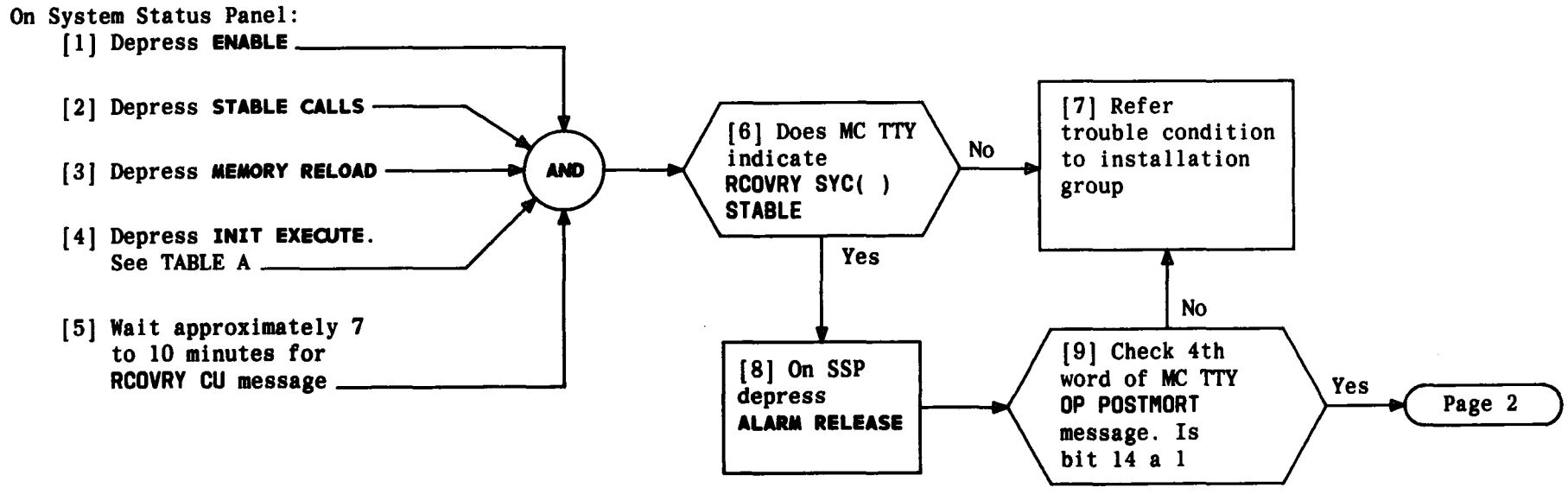

TABLE A	
IMMEDIATE RESPONSES	**DELAYED RESPONSES (Approximately 3 minutes)**
1. **FORCED** LED lights 2. **SERVICE LOSS** LED lights 3. **CRITICAL** LED lights 4. TTY bell rings (on 35ASR model only)	1. Audible alarm changes to major 2. **SYC ( ) OUT OF SERVICE** LED lights 3. **MAJOR EQUIP LOSS** lamp lights 4. **CU, NWC, SC, PPD** LEDs light 5. **SYSTEM NORMAL** lamp goes off

INITIALIZE SYSTEM FROM SSP USING MEMORY RELOAD

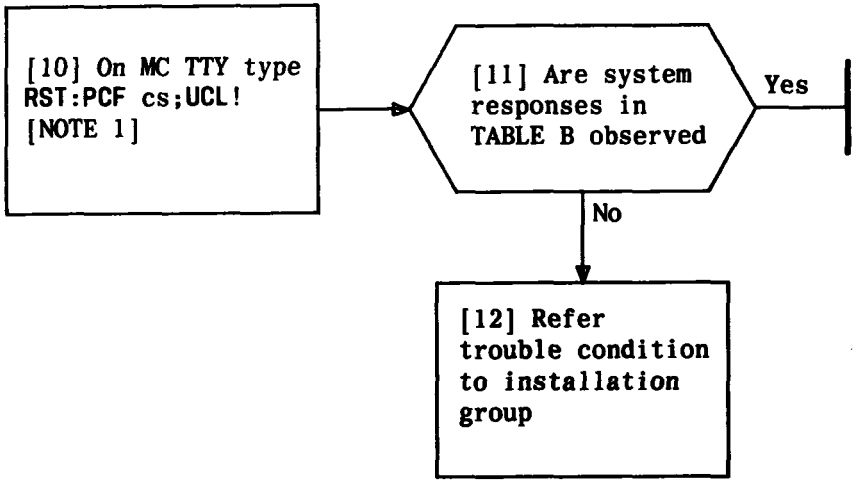

TABLE B
SERVICE LOSS LED off
MAJOR EQUIP LOSS lamp goes off
CU LED goes off
SYSTEM NORMAL lamp lights

NOTES

1. c = Peripheral control frame number
   s = SYC or side to be restored
   Offices having two control frames will be required to type **RST:PCF** message twice to restore both peripheral control frames

INITIALIZE SYSTEM FROM SSP USING MEMORY RELOAD

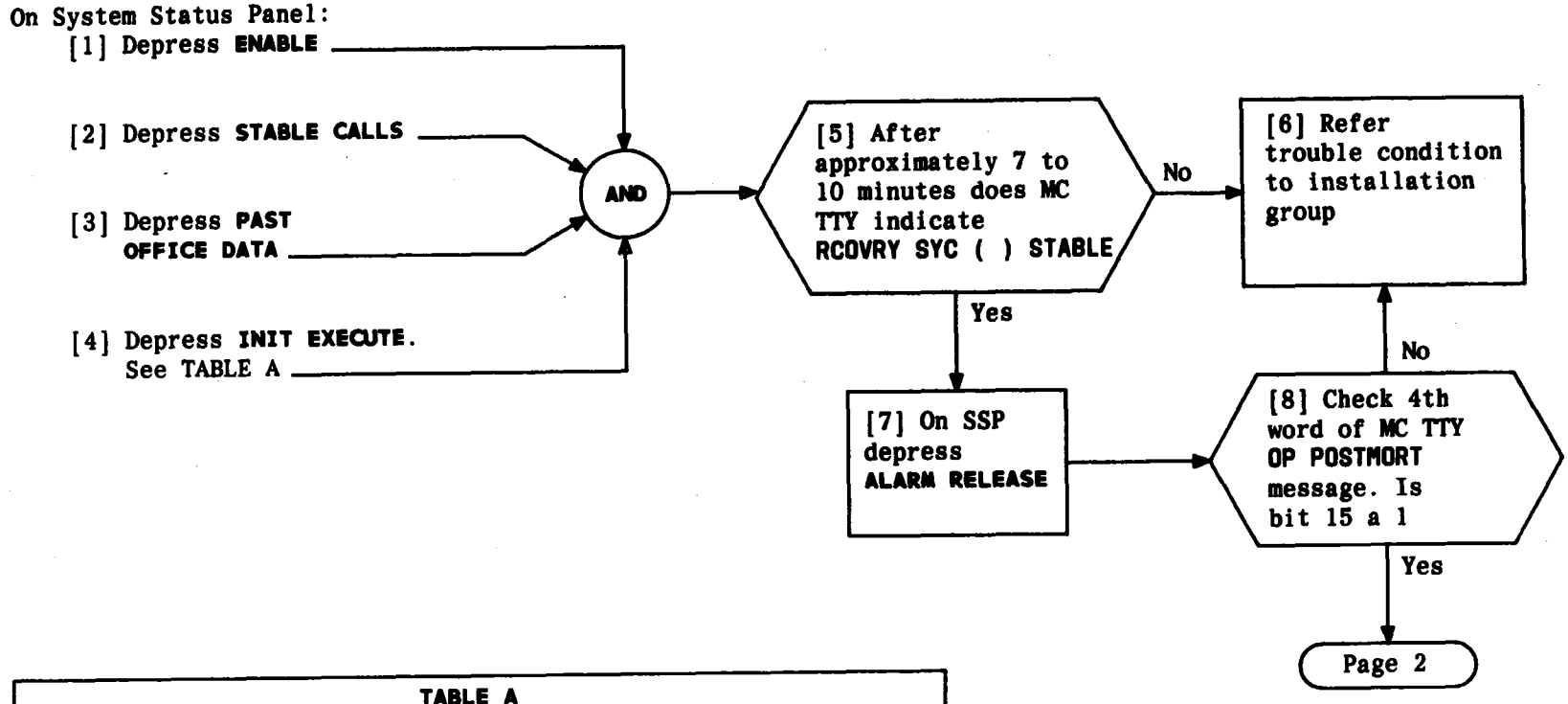

TABLE A	
IMMEDIATE RESPONSES	DELAYED RESPONSES (Approximately 3 minutes)
1. **FORCED** LED lights 2. **SERVICE LOSS** LED lights	1. Audible alarm changes to major 2. **SYC ( ) OUT OF SERVICE** LED lights 3. **CRITICAL** LED lights 4. **MAJOR EQUIP LOSS** lamp lights 5. **CU, NWC, SC, PPD** LEDs light 6. **SYSTEM NORMAL** lamp goes off

INITIALIZE SYSTEM FROM SSP USING PAST OFFICE DATA

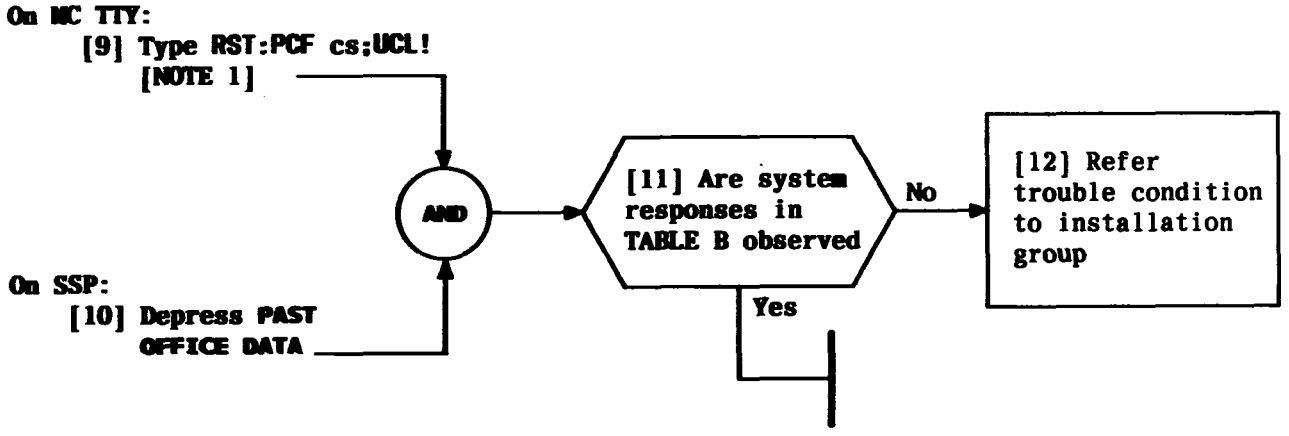

TABLE B
SERVICE LOSS LED off
MAJOR EQUIP LOSS lamp goes off
CU LED goes off
SYSTEM NORMAL lamp lights

NOTE

1. c = Peripheral control frame number
   s = SYC or side to be restored
   Offices having two control frames will be required to type RST:PCF message twice to restore both peripheral control frames

INITIALIZE SYSTEM FROM SSP USING PAST OFFICE DATA

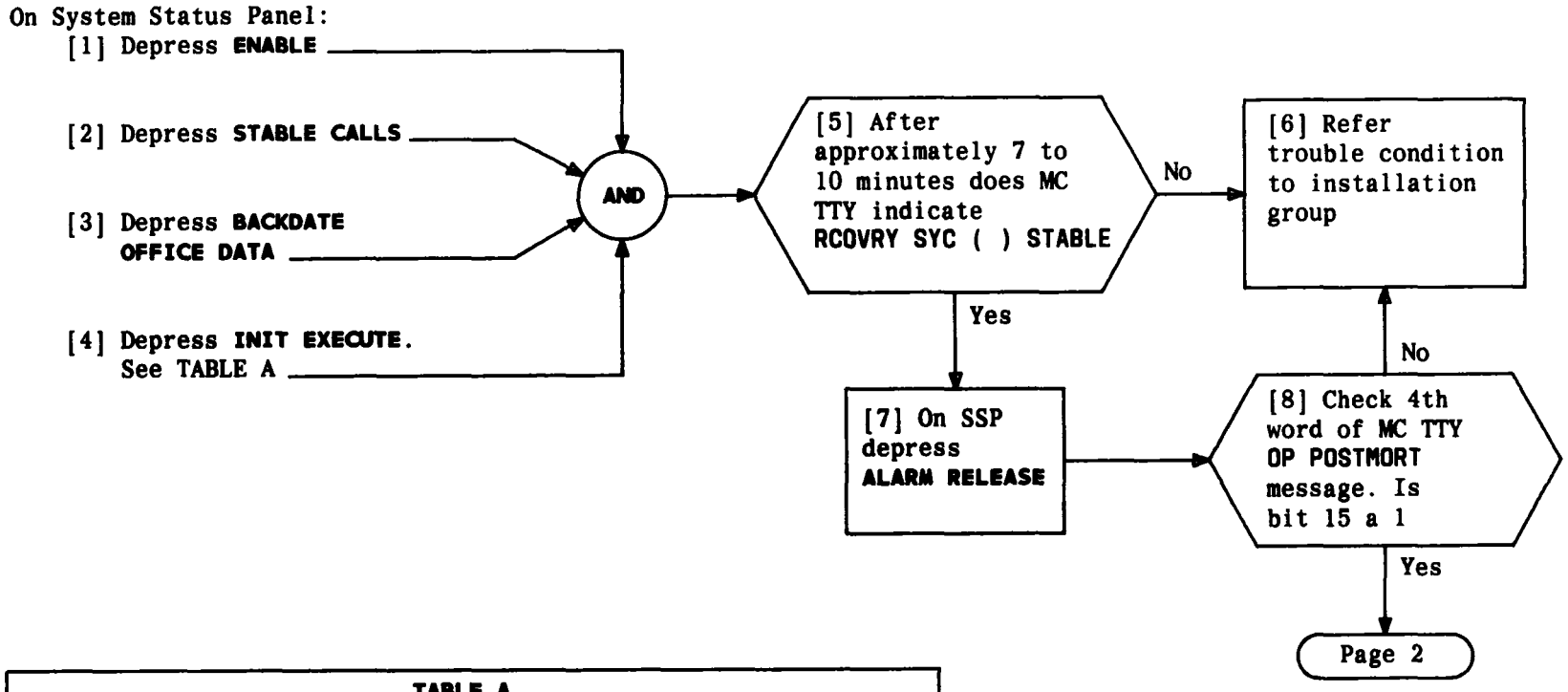

TABLE A	
IMMEDIATE RESPONSES	**DELAYED RESPONSES** (Approximately 3 minutes)
1. **FORCED** LED lights 2. **SERVICE LOSS** LED lights	1. Audible alarm changes to major 2. **SYC ( ) OUT OF SERVICE** LED lights 3. **CRITICAL** LED lights 4. **MAJOR EQUIP LOSS** lamp lights 5. **CU, NWC, SC, PPD** LEDs light 6. **SYSTEM NORMAL** lamp goes off

INITIALIZE SYSTEM FROM SSP USING BACKDATE OFFICE DATA

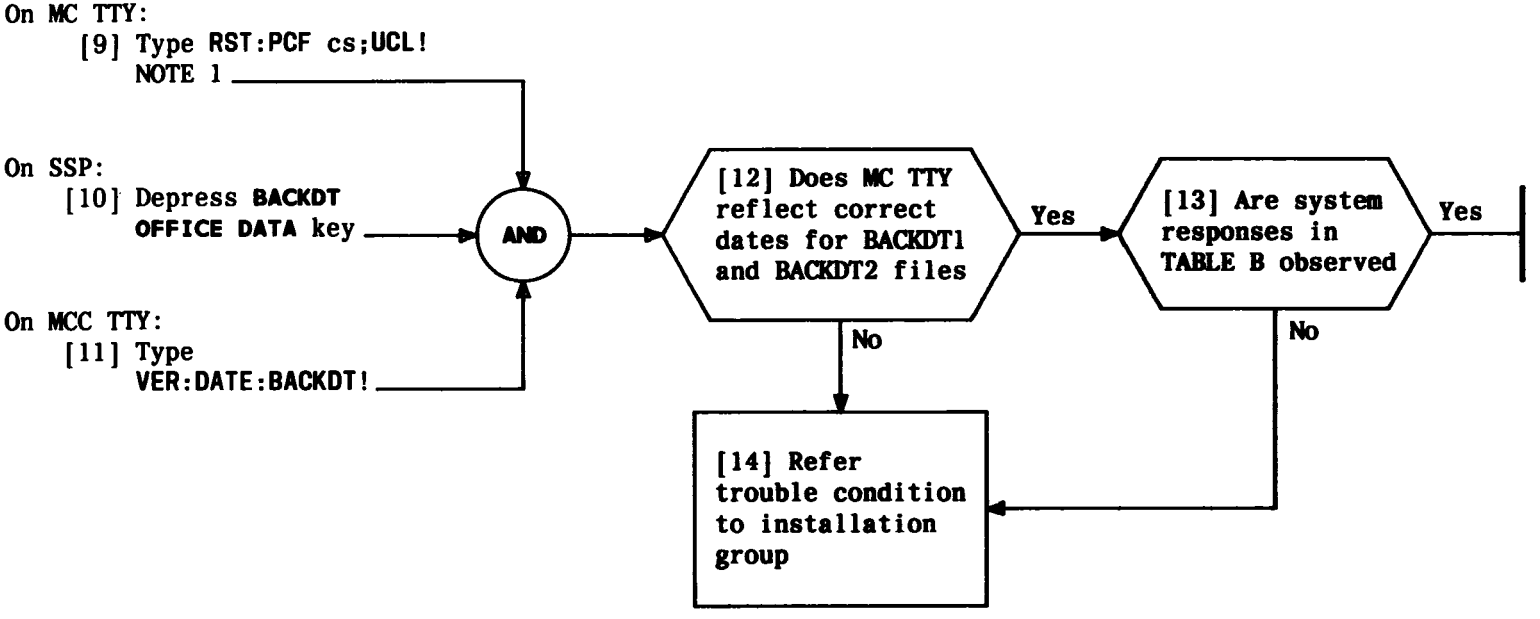

TABLE B
SERVICE LOSS LED off
MAJOR EQUIP LOSS lamp goes off
CU LED goes off
SYSTEM NORMAL lamp lights

NOTES

1. c = Peripheral control frame number
   s = SYC or side to be restored
   Offices having two control frames will be required to type RST:PCF message twice to restore both peripheral control frames

INITIALIZE SYSTEM FROM SSP USING BACKDATE OFFICE DATA

INITIALIZE SYSTEM FROM 3A CC PANEL, PROGRAM TIMER TIMEOUT CHECK

On System Status Panel:

[1] Depress **ALARM RELEASE**

At On-Line 3A CC Panel

[2] Open panel door. On back side of panel set **TEST MODE** key in upward position [NOTE 1]

[3] Depress **MANUAL** to activate manual control

[4] Set **MODE** to **HALT**. All other panel keys should be in downward position

[5] Momentarily depress **EXECUTE** key

See TABLE A for system response

AND

At Not Active 3A CC Panel:

[6] Set **TEST MODE** and **HALT** keys to downward position

[7] At SSP depress **ALARM RELEASE**

[8] At Not Active 3A CC panel depress **MANUAL** to release manual condition

AND

Page 2

TABLE A
Active **SYC** ( ) switched sides
SYC() **OUT OF SERVICE** LED lights
SERVICE LOSS LED lights
MAJOR EQUIP LOSS lamp lights
CU LED lights
CRITICAL alarm LED lights
CRITICAL audible alarm sounds

NOTE 1
3A CC panel is mounted on hinges and will swing open for access to back side

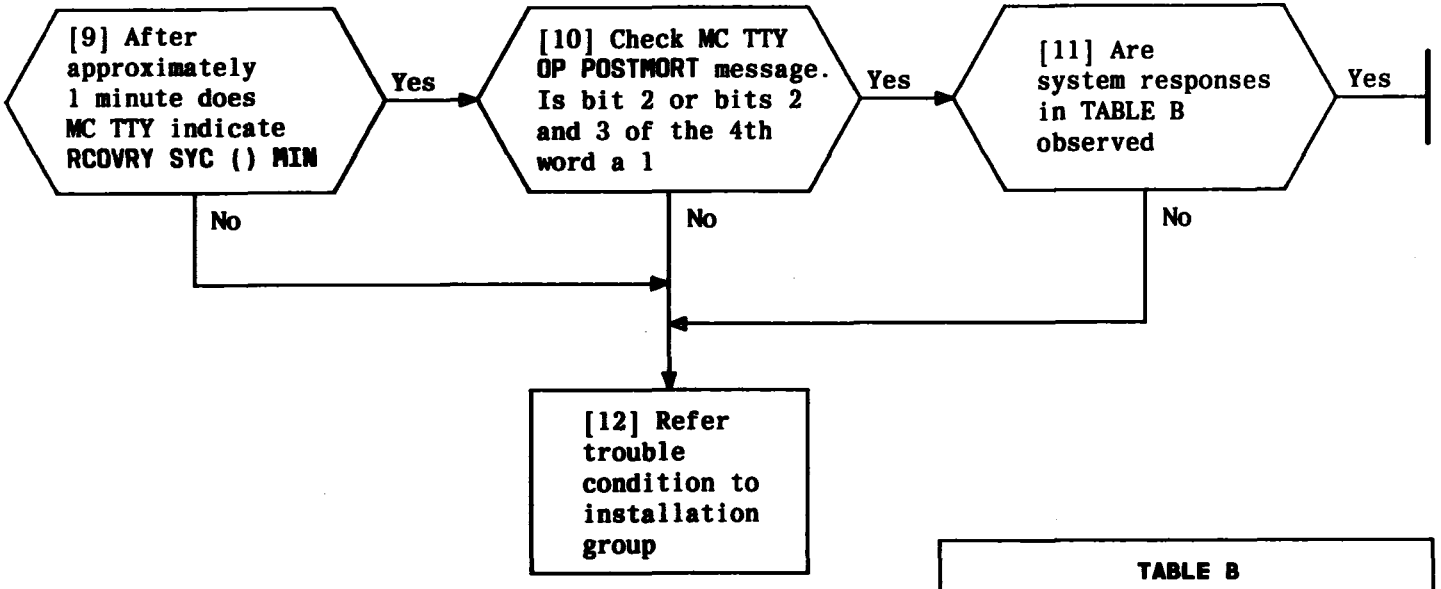

TABLE B
SYC ( ) ACTIVE LED lights
SYC ( ) STANDBY LED lights
CU LED goes off
SERVICE LOSS LED goes off
MAJOR EQUIP LOSS lamp goes off

NOTE 2
RST:CU message will automatically cause CU diagnostics to be run, which will require several minutes. When completed, alarm will sound two times

INITIALIZE SYSTEM FROM 3A CC PANEL, PROGRAM TIMER TIMEOUT CHECK

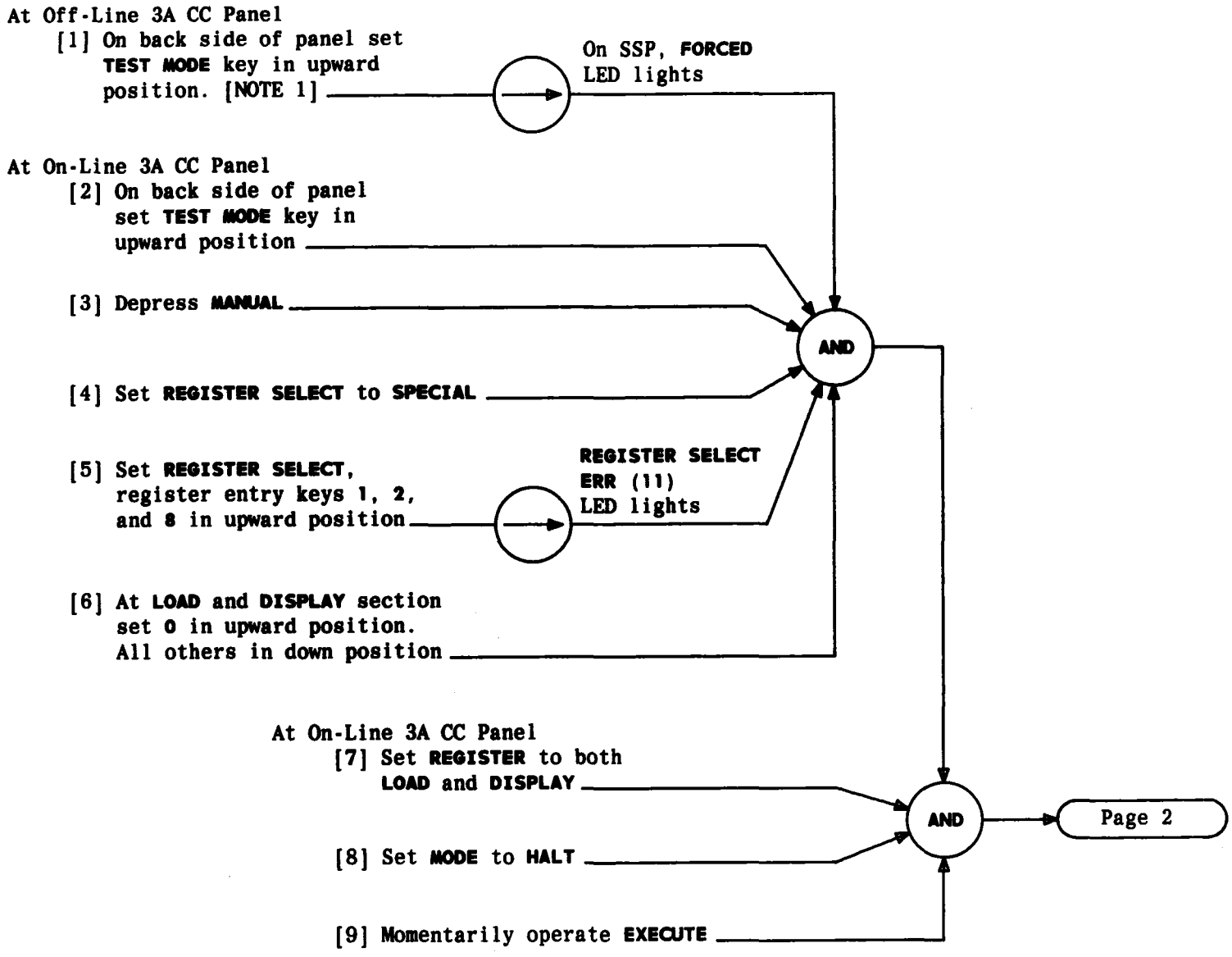

NOTE 1
3A CC panel is mounted on hinges and will swing open for access to back side

Issue 3	AUG 1984
233-142-100	DLP
PAGE 1 of 3	618

INITIALIZE SYSTEM FROM 3A CC PANEL, ERROR REGISTER BIT SET CHECK

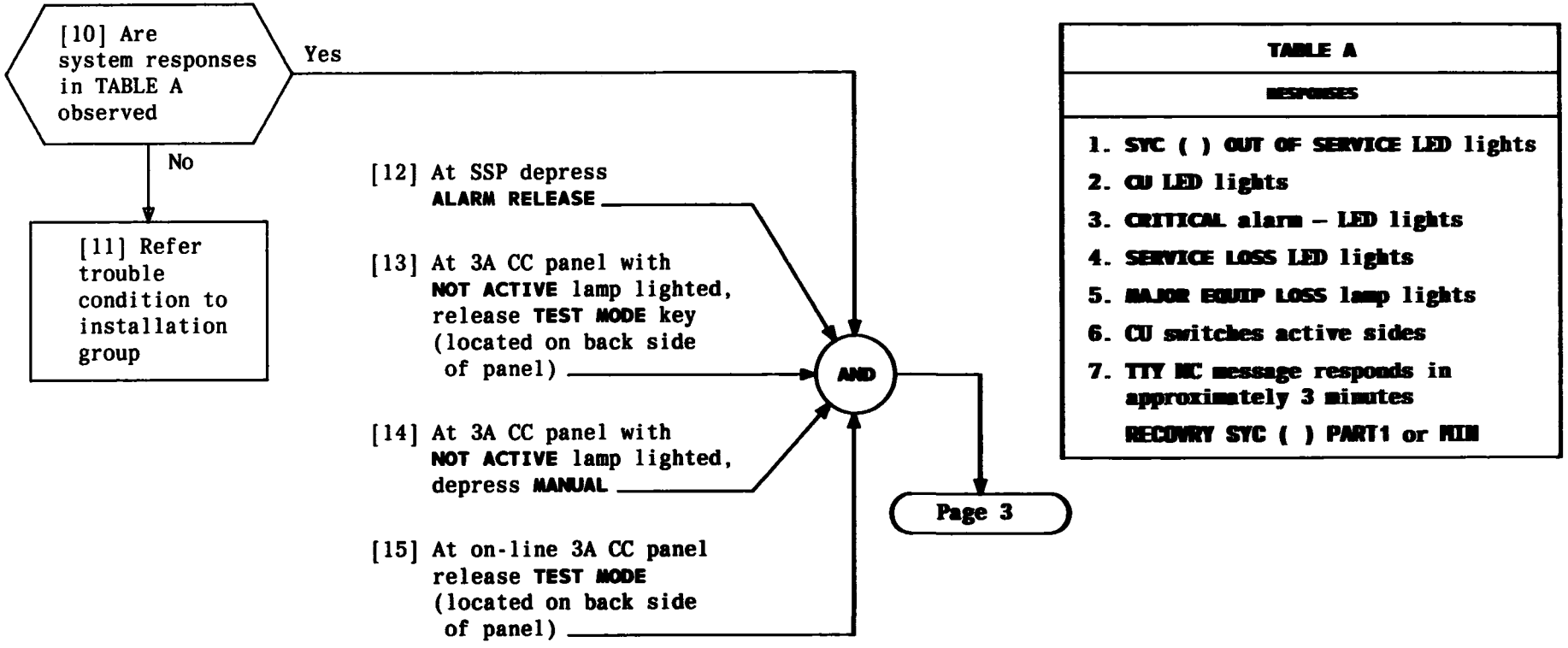

INITIALIZE SYSTEM FROM 3A CC PANEL, ERROR REGISTER BIT SET CHECK

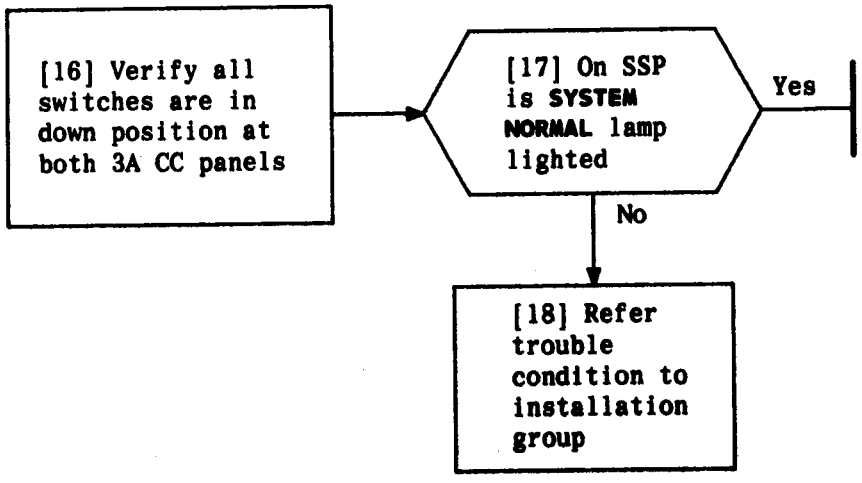

INITIALIZE SYSTEM FROM 3A CC PANEL, ERROR REGISTER BIT SET CHECK

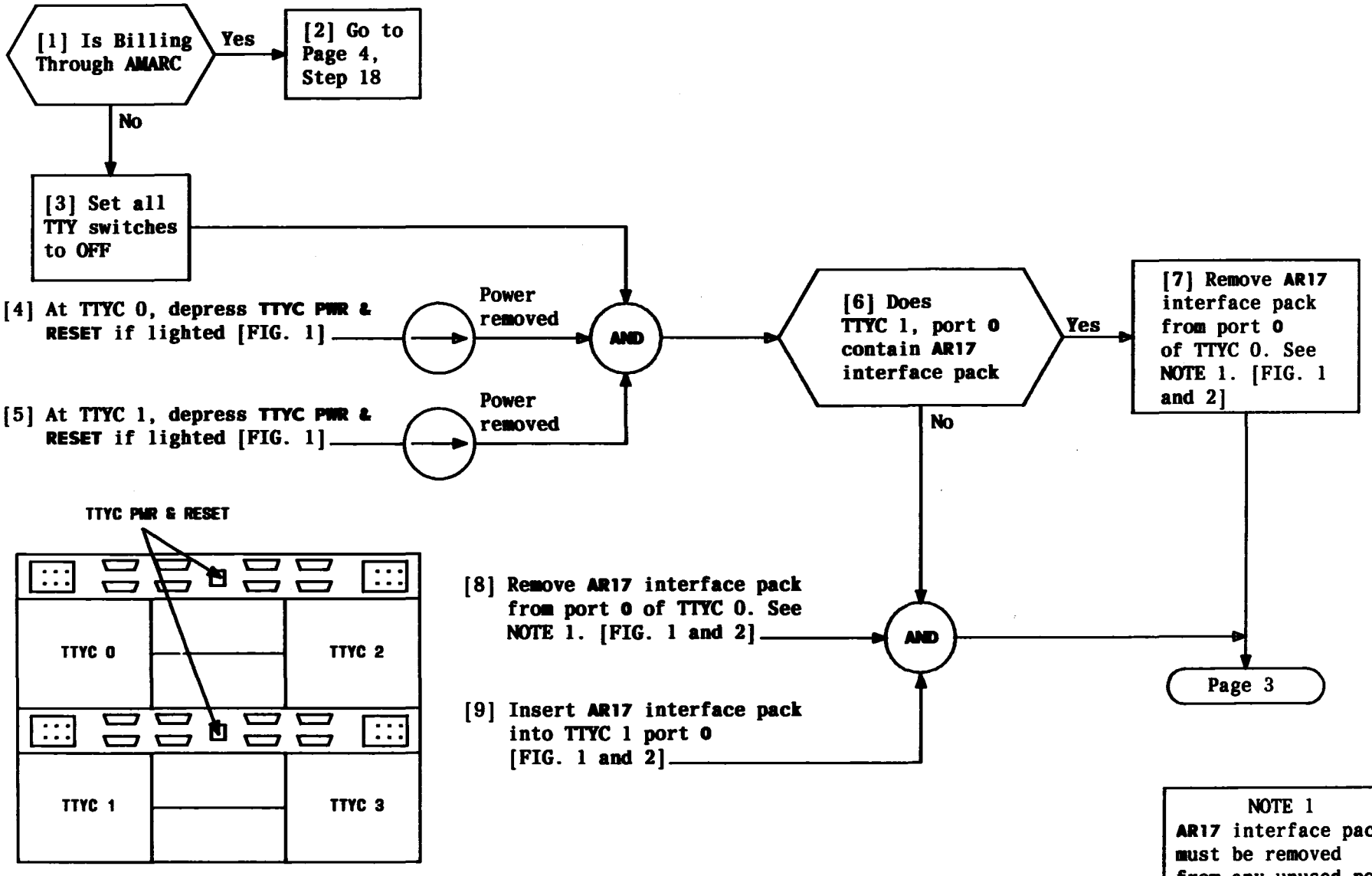

FIG. 1 – Typical TTYC Layout

NOTE 1
AR17 interface pack must be removed from any unused port

SWITCH LOCAL TELETYPEWRITER FROM MAINTENANCE (MC) TTY CONTROLLER (TTYC 0) TO BACKUP TTY CONTROLLER (TTYC 1)

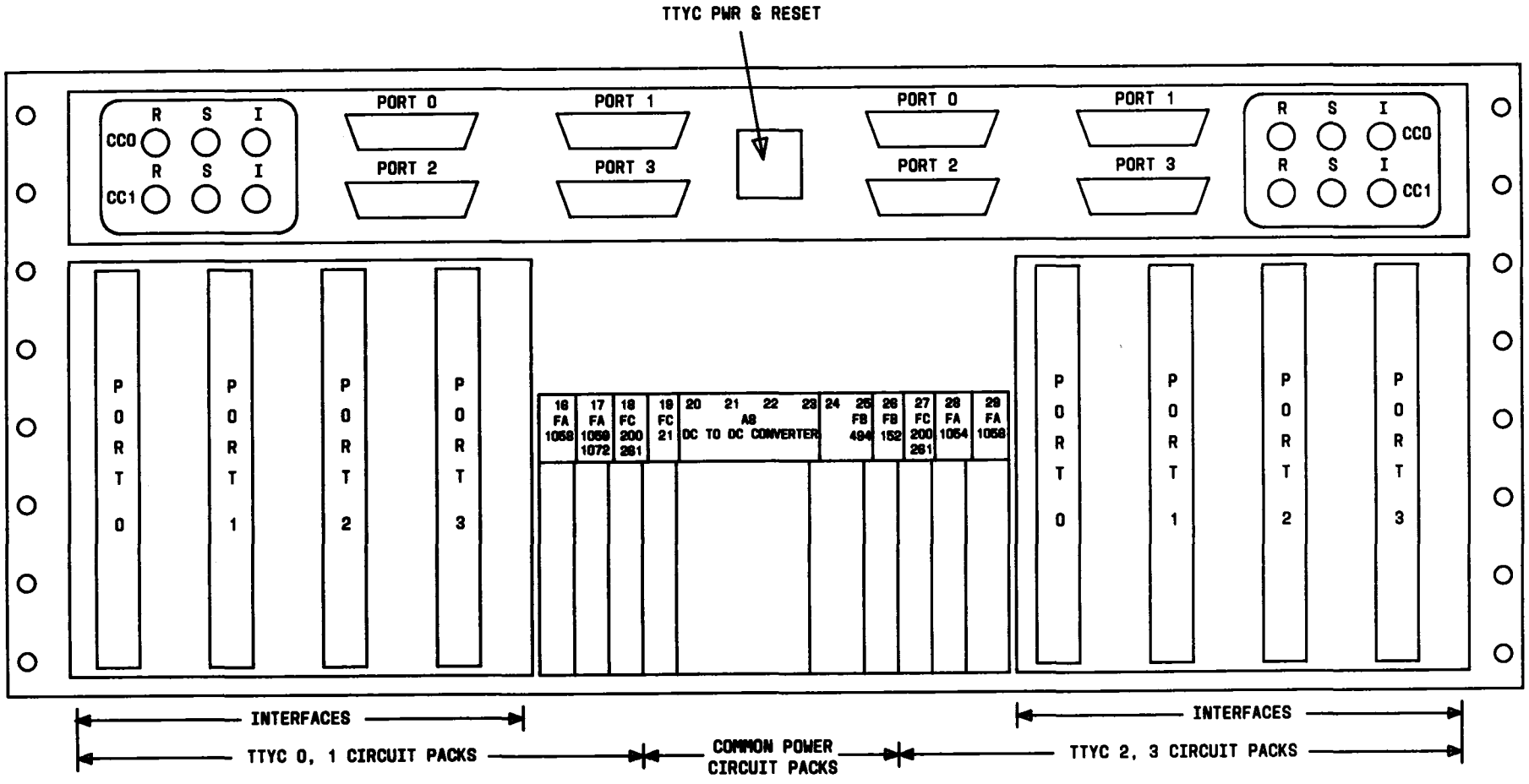

FIG. 2

SWITCH LOCAL TELETYPEWRITER FROM MAINTENANCE (MC) TTY CONTROLLER (TTY 0) TO BACKUP TTY CONTROLLER (TTYC 1)

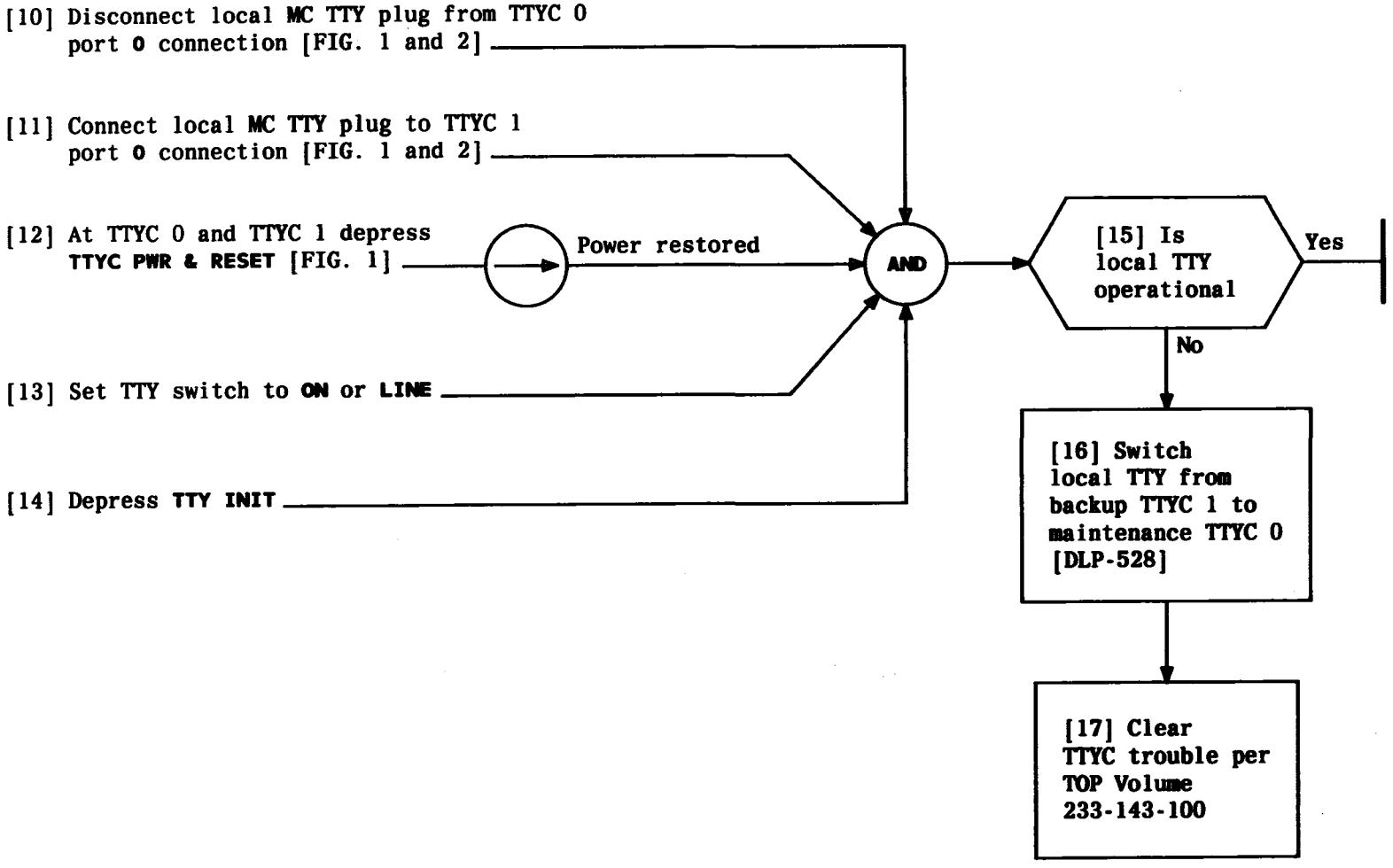

SWITCH LOCAL TELETYPEWRITER FROM MAINTENANCE (MC) TTY CONTROLLER (TTY 0) TO BACKUP TTY CONTROLLER (TTYC 1)

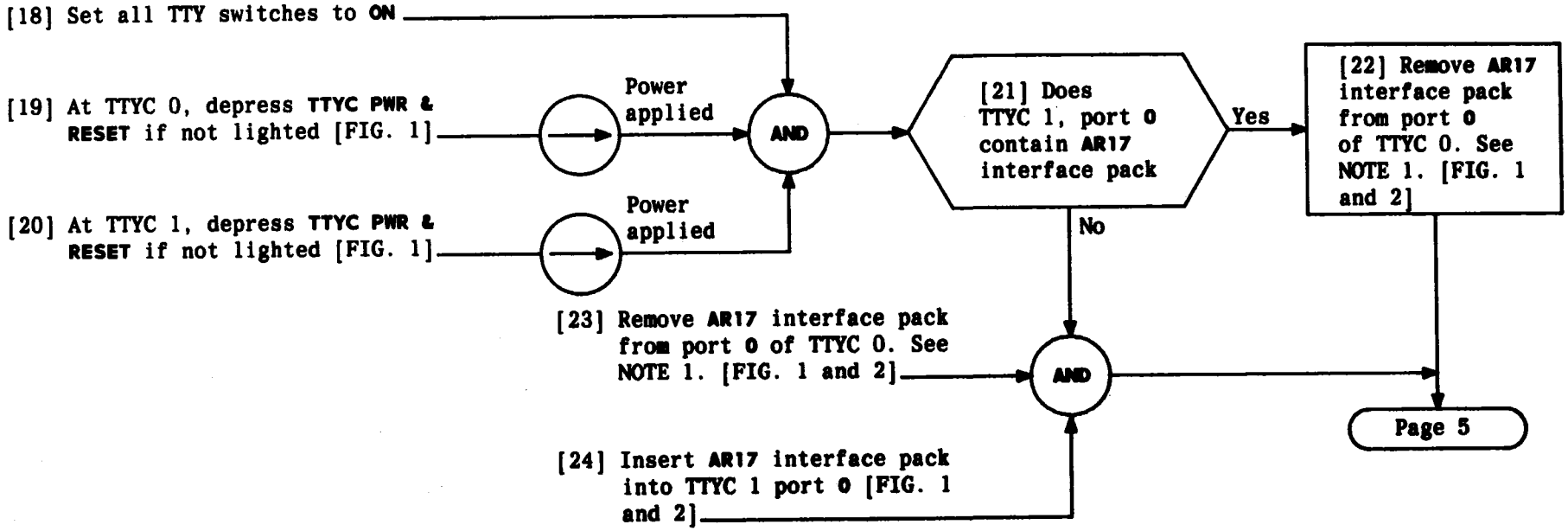

SWITCH LOCAL TELETYPEWRITER FROM MAINTENANCE (MC) TTY CONTROLLER (TTYC 0) TO BACKUP TTY CONTROLLER (TTYC 1)

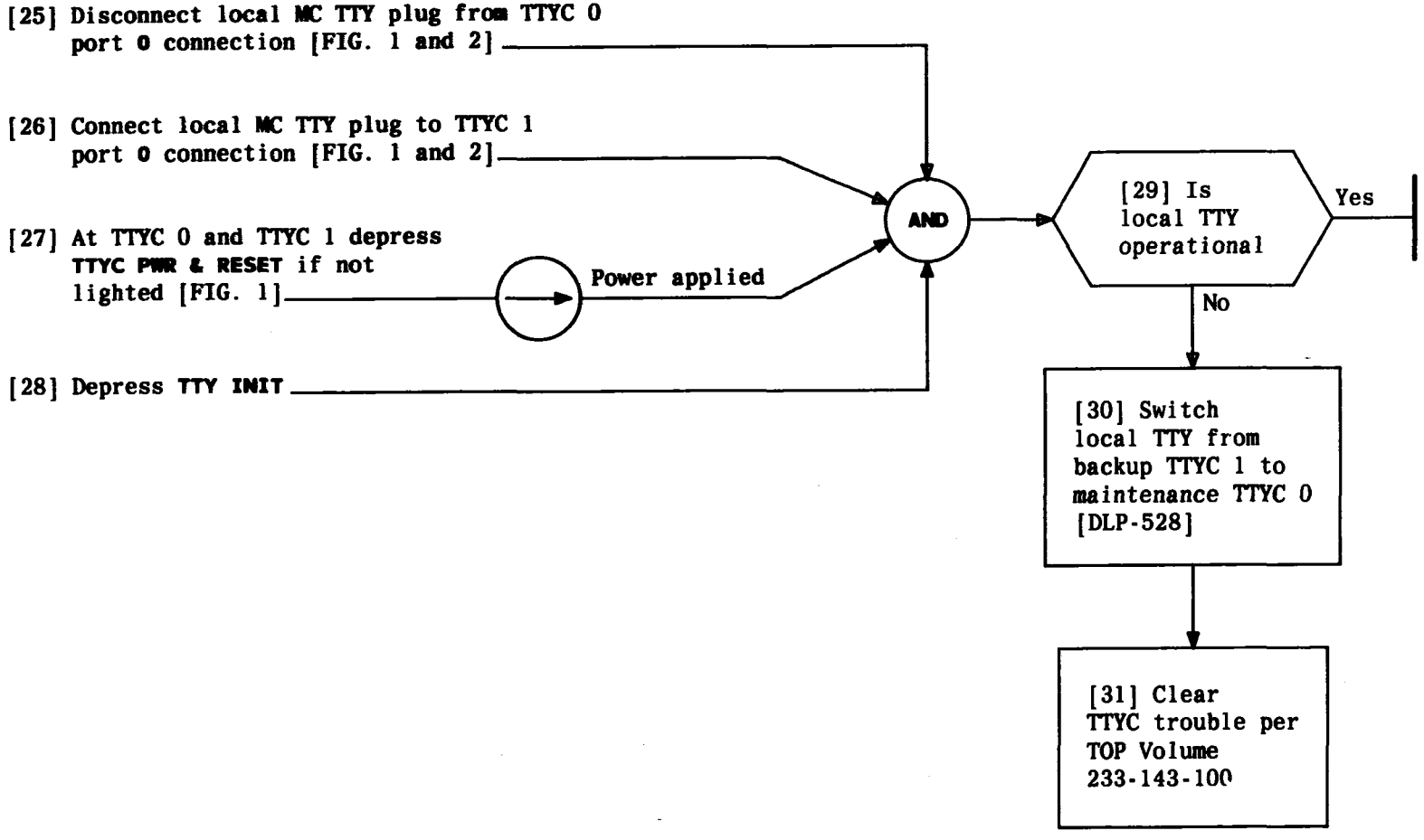

SWITCH LOCAL TELETYPEWRITER FROM MAINTENANCE (MC) TTY CONTROLLER (TTY 0) TO BACKUP TTY CONTROLLER (TTYC 1)

[1] At TTY type: (see FIG. 1)

```
RC:SP/
TYP CHG/
SP SS RR pp/
ACT ttt/
USERID NN/
ALM N/
CKT N/
END!
```

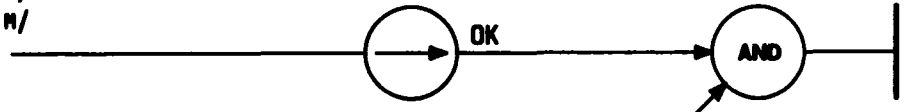

[2] Retest alarm which provoked the problem

ENTER RECENT CHANGE ALARM UPDATE

ESS 3506-1 (02) TG-3

ALARM MONITOR DATA TABLE
NO. 3 ESS

BASE & CONTROL _____ (6 – 11)

FORM CODE 80 (14 – 15) ESS UNIT _____ PAGE __OF__ (17)

ITEM (18 – 19)	SCAN POINT NUMBER: SCANNER (20 – 21)	ROW (22 – 23)	POINT (24 – 25)	ALARM TYPE: CRITICAL (26)	MAJOR (27)	MINOR (28)	MAJOR POWER (29)	MINOR POWER (30)	MAJOR FUSE (31)	MINOR FUSE (32)	ALARM CIRCUIT (33)	NORMAL CKT. STATE: OPEN (34)	CLOSED (35)	USER ID (36 – 37)	ACTIVE SCAN POINT (38)	REMARKS	REVISE (39)
50	0 0	2 6	0 9								✓	✓		5 2		+24V CONVERTER FAILURE	
51	0 0	2 6	1 0								✓	✓		5 2		+24V FUSE ALARM	
52	0 0	2 6	1 1									✓		2 2		+24V NO POWER ALARM	
53	0 0	2 4	1 1					✓				✓		5 6		130V CONVERTER FAILURE	
54	0 0	2 4	1 2							✓		✓		5 6		130V CONVERTER FUSE ALARM	
				7	1	2	3	4	5	6	0						

ss rr pp

ttt = YES - ACTIVATE POINT
NO - DEACTIVATE POINT

nn

n = 0-7 - ALARM TYPE
OR NO (NO ALARM TYPE)

m = OPEN OR CLOSED - NORMAL CKT STATE

FIG. 1 – Translation Guide Form 3506-1

ENTER RECENT CHANGE ALARM UPDATE

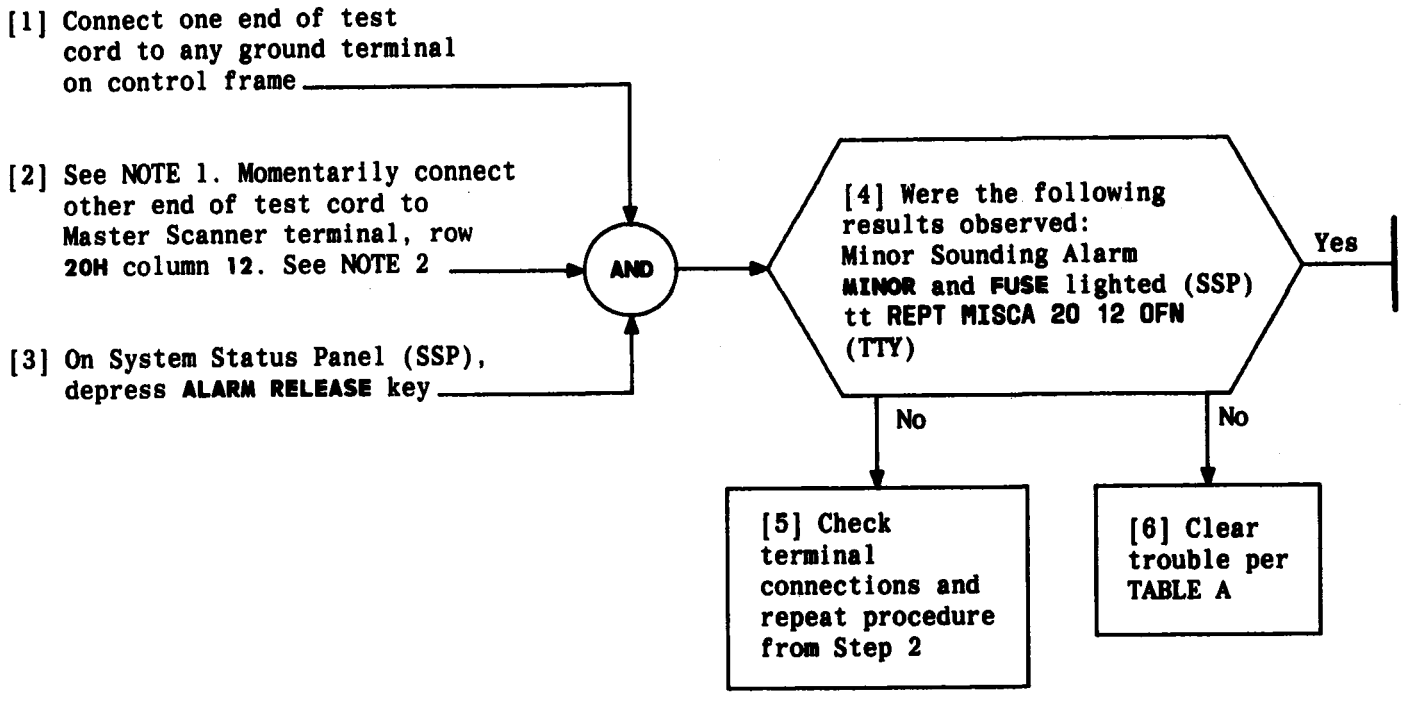

TABLE A

INDICATOR LOCATION	INDICATION NOT OBSERVED	TROUBLE CLEARING DATA
Building	Minor Sounding Alarm	TAP-100
SSP	MINOR and FUSE lighted	TAP-112
TTY	tt REPT MISCA 20 12 OFN	TAP-113

NOTES

1. Use care in connecting Master Scanner terminals. Improper connections cause erroneous results
2. If system does not respond to grounding terminal H, ground the L terminal

TEST FUSE ALARM FOR TRUNKS, JUNCTORS, AND SERVICE CIRCUITS

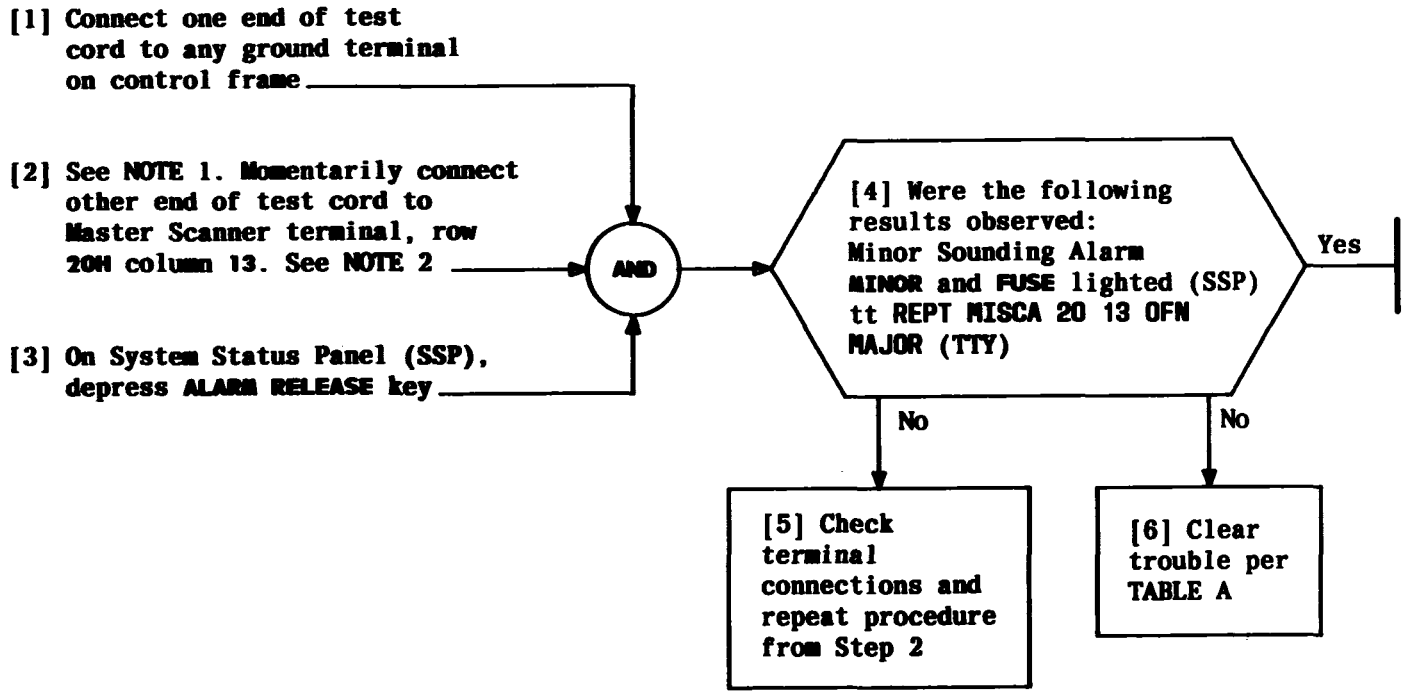

TABLE A		
INDICATOR LOCATION	INDICATION NOT OBSERVED	TROUBLE CLEARING DATA
Building	Minor Sounding Alarm	TAP-100
SSP	MINOR and FUSE lighted	TAP-112
TTY	tt REPT MISCA 20 13 OFN MAJOR	TAP-113

NOTES
1. Use care in connecting Master Scanner terminals. Improper connections cause erroneous results
2. If system does not respond to grounding terminal H, ground L terminal

TEST LINE FERROD FUSE ALARM

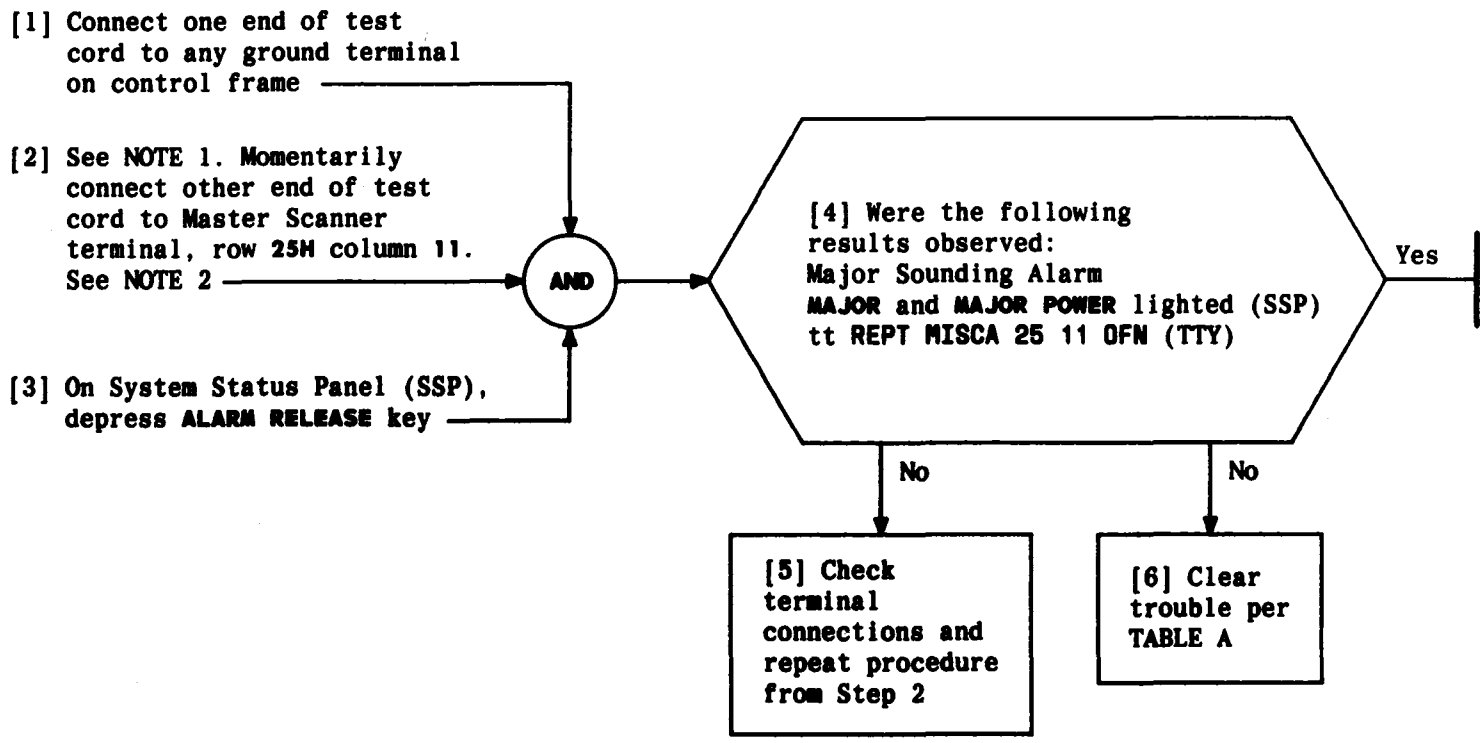

TABLE A		
INDICATOR LOCATION	INDICATION NOT OBSERVED	TROUBLE CLEARING DATA
Building	Major Sounding Alarm	TAP-100
SSP	MAJOR and MAJOR POWER lighted	TAP-112
TTY	tt REPT MISLA 25 11 OFN	TAP-113

NOTES
1. Use care in connecting Master Scanner terminals. Improper connections cause erroneous results
2. If system does not respond to grounding H terminal, ground L terminal

TEST BATTERY BOOST POWER ALARM

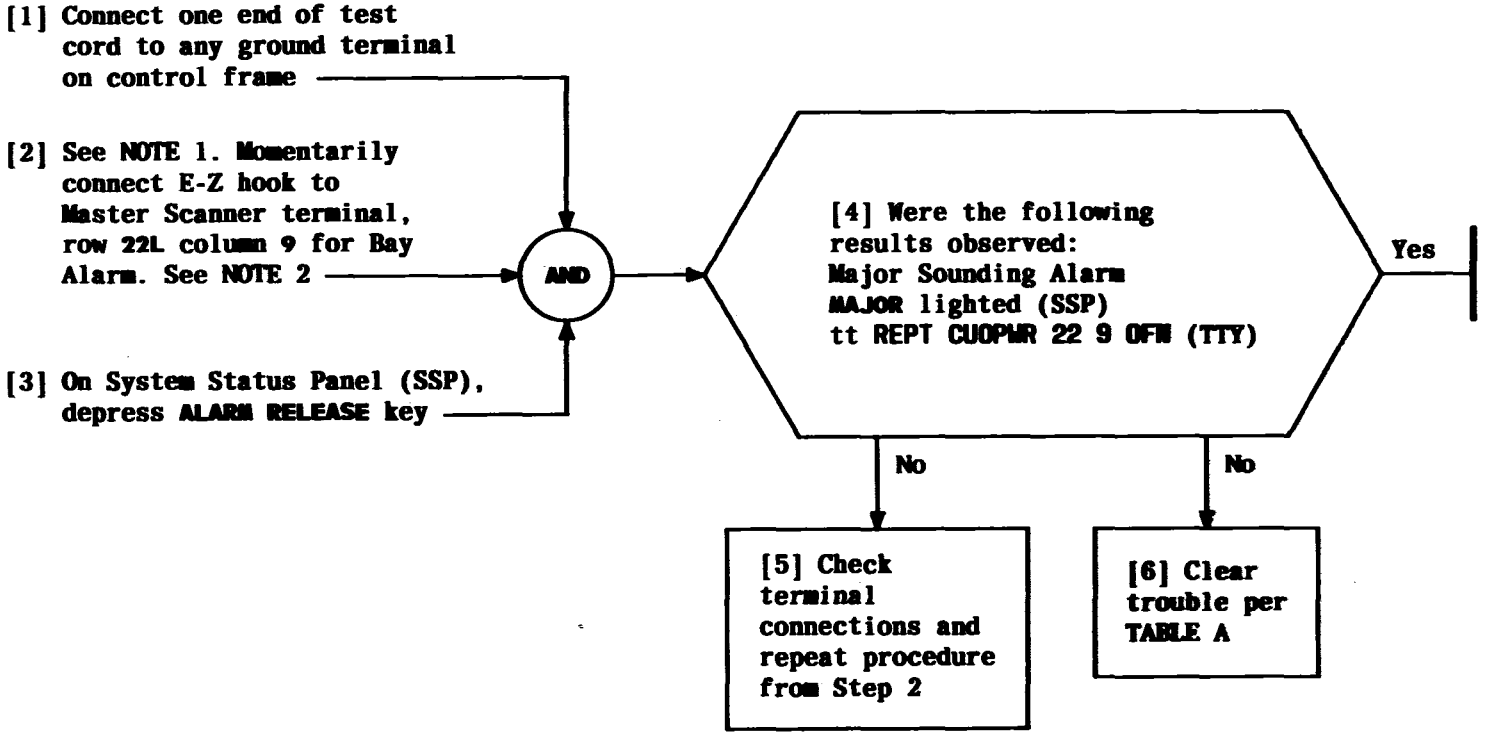

TABLE A		
INDICATOR LOCATION	INDICATION NOT OBSERVED	TROUBLE CLEARING DATA
Building	Major Sounding Alarm	TAP-100
SSP	MAJOR lighted	TAP-112
TTY	tt REPT CUOPWR 22 9 OFN	TAP-113

NOTES

1. Use care in connecting Master Scanner terminals. Improper connections cause erroneous results
2. If system does not respond to grounding L terminal, ground H terminal

Issue 3	AUG 1984
233-142-100	BLP
PAGE 1 of 1	624

TEST BAY 0 MAJOR POWER ALARM

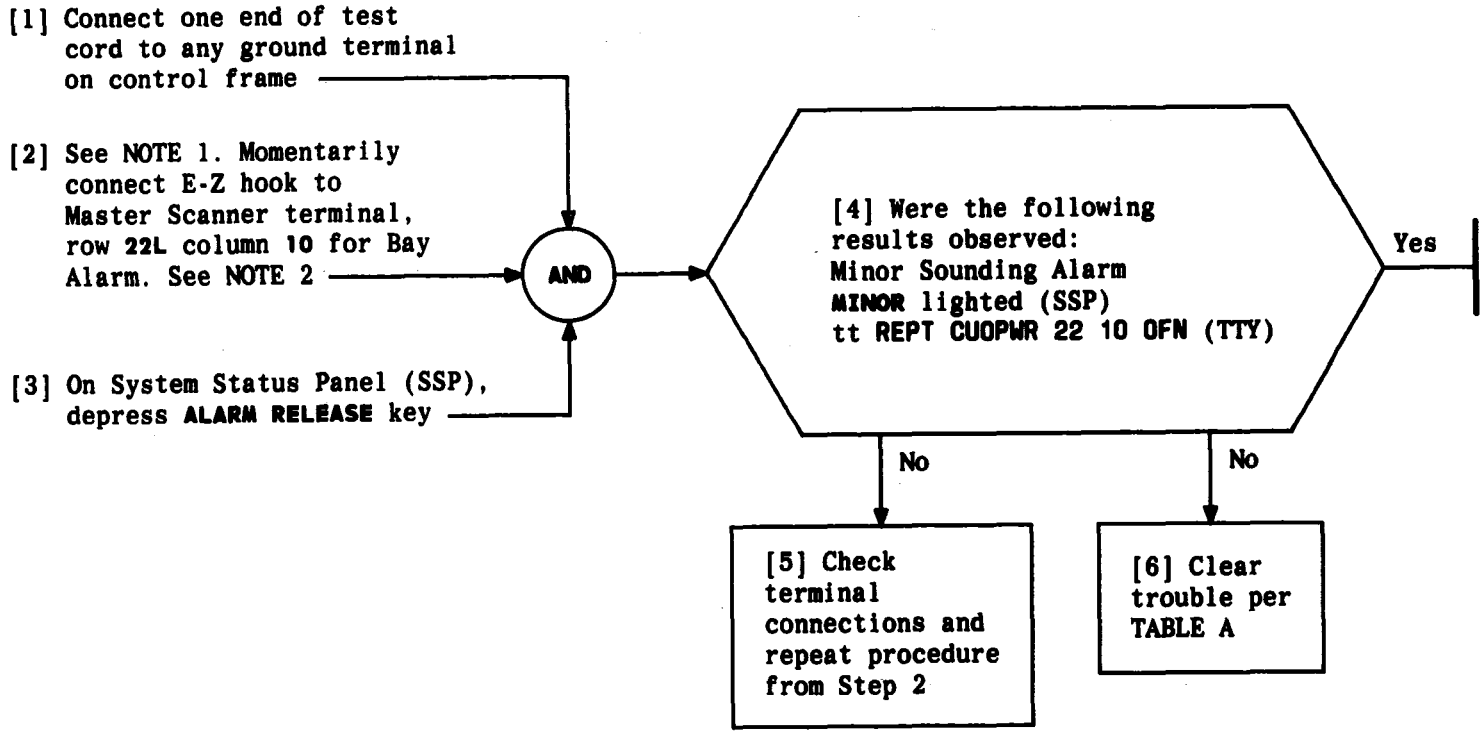

TABLE A		
INDICATOR LOCATION	INDICATION NOT OBSERVED	TROUBLE CLEARING DATA
Building	Minor Sounding Alarm	TAP-100
SSP	MINOR lighted	TAP-112
TTY	tt REPT CUOPWR 22 10 OFN	TAP-113

NOTES

1. Use care in connecting Master Scanner terminals. Improper connections cause erroneous results
2. If system does not respond to grounding L terminal, ground H terminal

TEST BAY 0 MINOR POWER ALARM

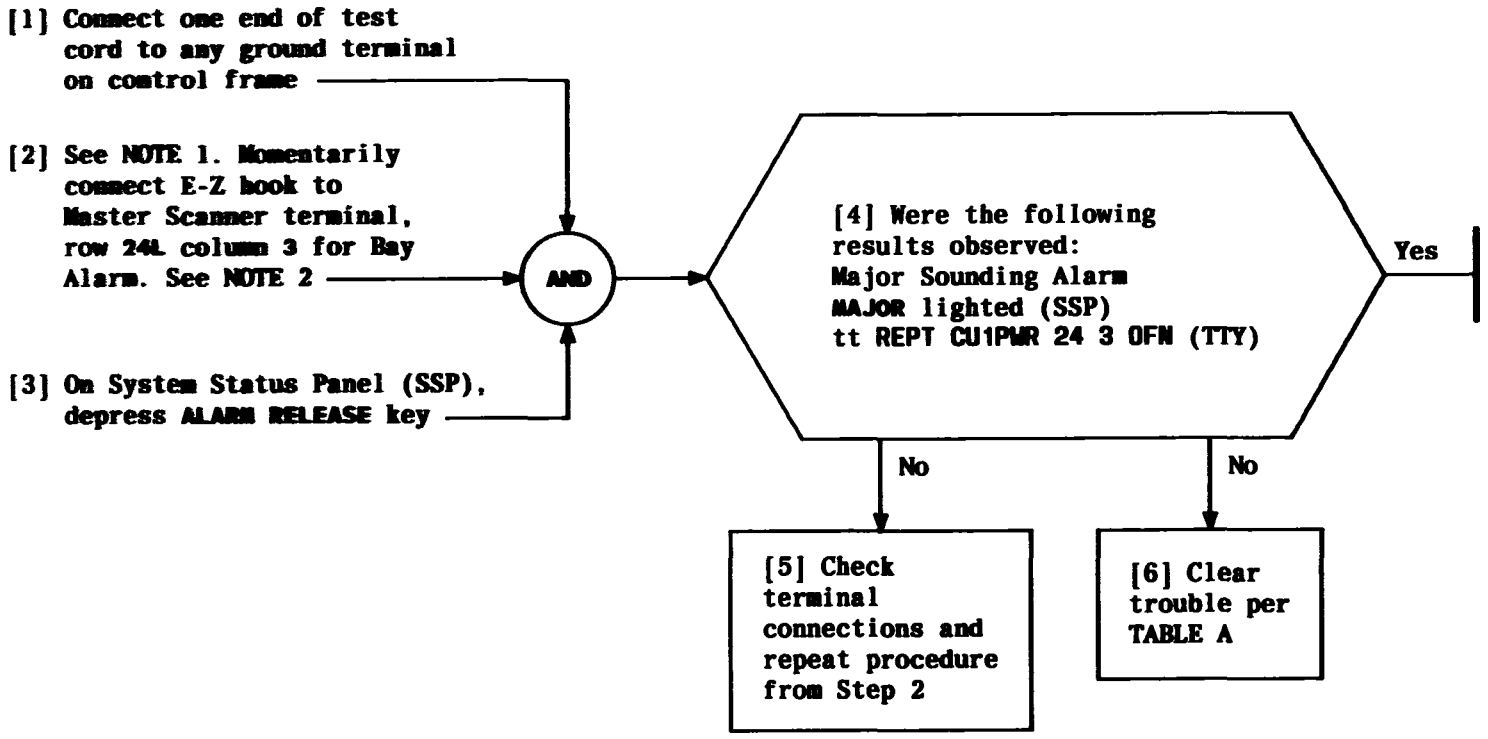

TABLE A		
INDICATOR LOCATION	INDICATION NOT OBSERVED	TROUBLE CLEARING DATA
Building	Major Sounding Alarm	TAP-100
SSP	MAJOR lighted	TAP-112
TTY	tt REPT CU1PWR 24 3 OFN	TAP-113

NOTES
1. Use care in connecting Master Scanner terminals. Improper connections cause erroneous results
2. If system does not respond to grounding L terminal, ground H terminal

TEST BAY 1 MAJOR POWER ALARM

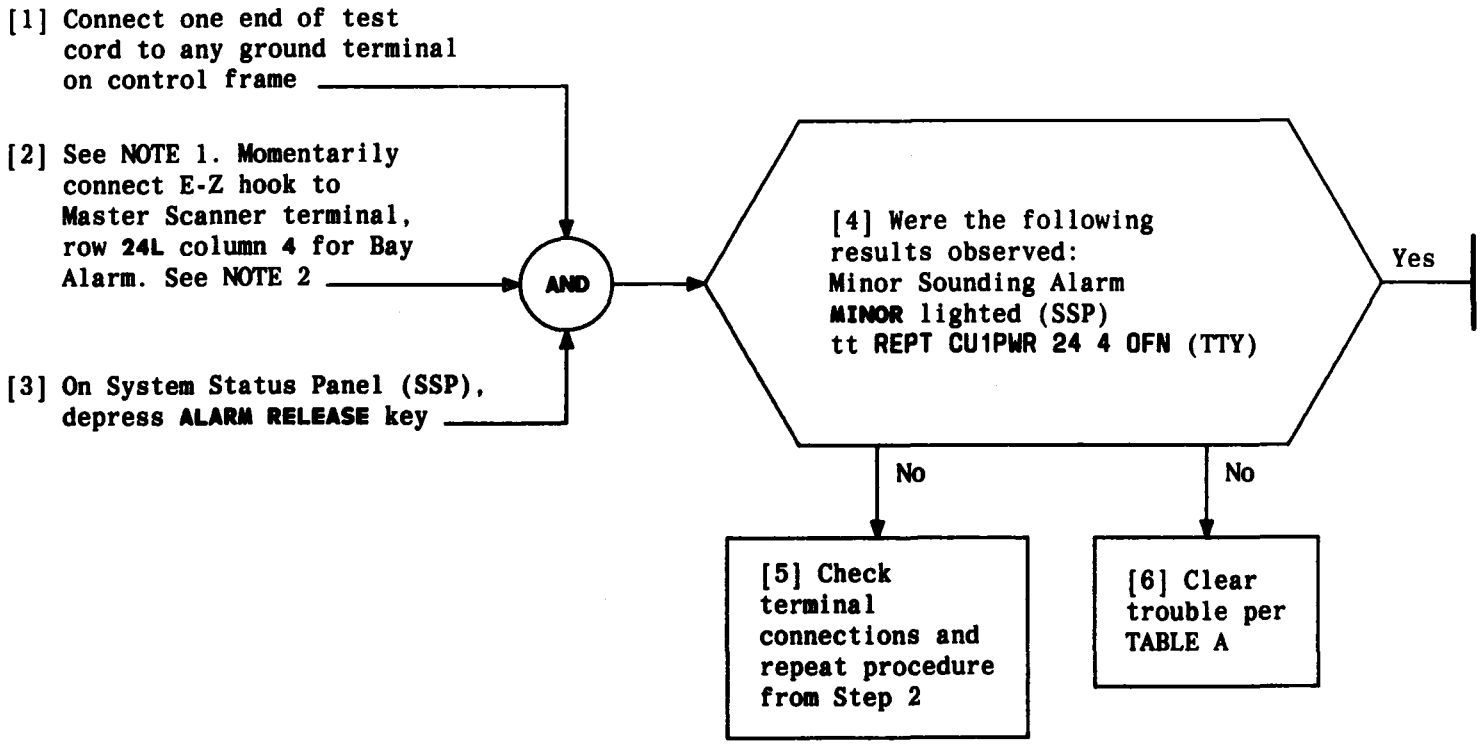

TABLE A		
INDICATOR LOCATION	INDICATION NOT OBSERVED	TROUBLE CLEARING DATA
Building	Minor Sounding Alarm	TAP-100
SSP	MINOR lighted	TAP-112
TTY	tt REPT CU1PWR 24 4 OFN	TAP-113

NOTES
1. Use care in connecting Master Scanner terminals. Improper connections cause erroneous results
2. If system does not respond to grounding L terminal, ground H terminal

TEST BAY 1 MINOR POWER ALARM

SUMMARY

Increase room temperature no more than 10°F for every hour the test is run, not to exceed 115°F. The test must run for a minimum of 4 hours (2 hours on each CU). Maintain a call volume of at least 500 calls per hour (may be waived if office is not equipped with enough service circuits), per network frame. Observe that off-line duplicated units can be powered down with no effect on service. Investigate and resolve all maintenance TTY printouts that occur during test period. No more than 1 in 10,000 calls should fail to complete during test interval. The number of troubles which indicate a malfunction but not a failure to complete must not exceed 5 in 10,000 calls.

[1] Verify that cooling and circulating equipment has been turned off

[2] Measure room temperature 5 feet above floor in center of aisle

[3] Increase room temperature no more than 10°F for every hour test is run, not to exceed 115°F

[4] Observing **SERVICE LOSS** lamp on SSP, verify that off-line duplicated units can be powered down and up with no effect on service

[5] Verify that all duplicated units are powered up (**POWER** lamps ON) before testing

[6] See NOTE 1. Using Speed Call 8 Load Boxes, maintain a call volume of at least 500 calls per hour per network frame for a minimum of 2 hours

[7] Force Nightly Routine to run during test period [DLP-529]

AND

[8] Were requirements in TABLE A met

Yes → Page 2

No → [9] Verify that installation group repairs faults and reruns tests

TABLE A

CONDITION	RESULT
Calling Rate	At least 500 calls per hour, per network frame
Failure Rate	1 failure to complete in 10,000 calls
Malfunctions; Not Definite Failures to Complete	5 in 10,000 calls

NOTE 1

The call volume of 500 calls per hour, per network frame, may be reduced if office is not equipped with enough service circuits to handle the 500 call rate.

OBSERVE PROCEDURES AND RESULTS OF MAINTENANCE VOLUME TESTS

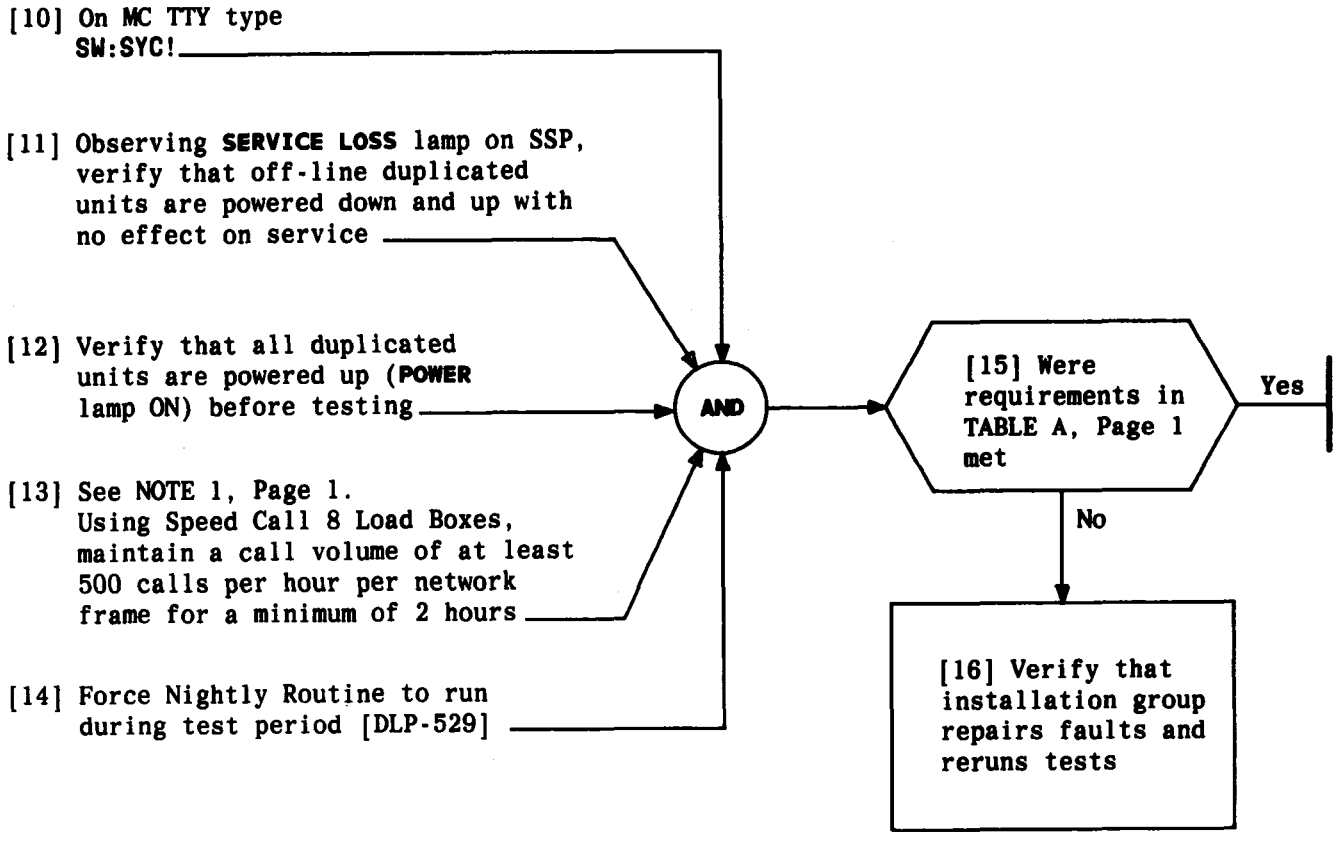

OBSERVE PROCEDURES AND RESULTS OF MAINTENANCE VOLUME TESTS

SUMMARY

Increase room temperature no more than 10°F every hour test is run, not to exceed 115°F. The test must run for a minimum of 4 hours (2 hours on each CU). Maintain a call volume of at least 500 calls per hour (may be waived if office is not equipped with enough service circuits), per network frame. Observe that off-line duplicated units can be powered down with no effect on service. Investigate and resolve all maintenance TTY printouts that occur during test period. No more than 1 in 10,000 calls should fail to complete during test interval. The number of troubles which indicate a malfunction but not a failure to complete must not exceed 5 in 10,000 calls.

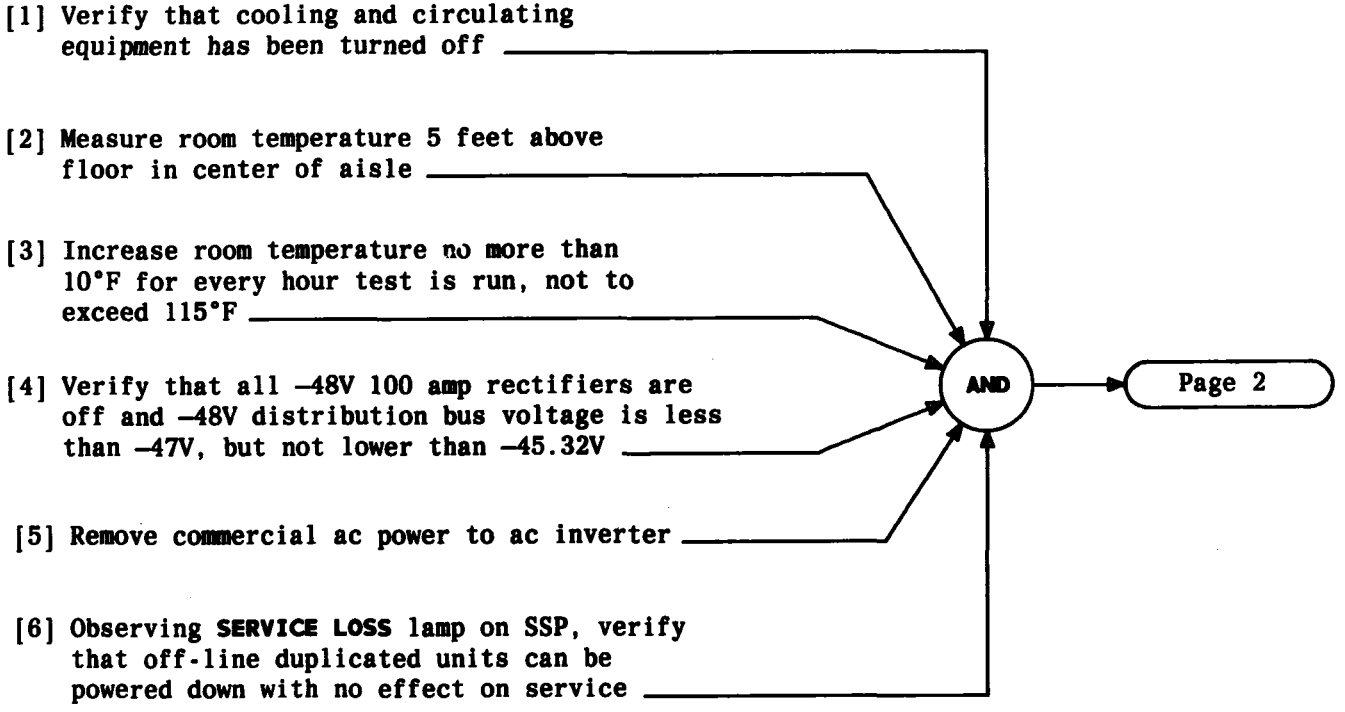

OBSERVE PROCEDURES AND RESULTS OF SIMULATED COMMERCIAL POWER FAILURE TESTS

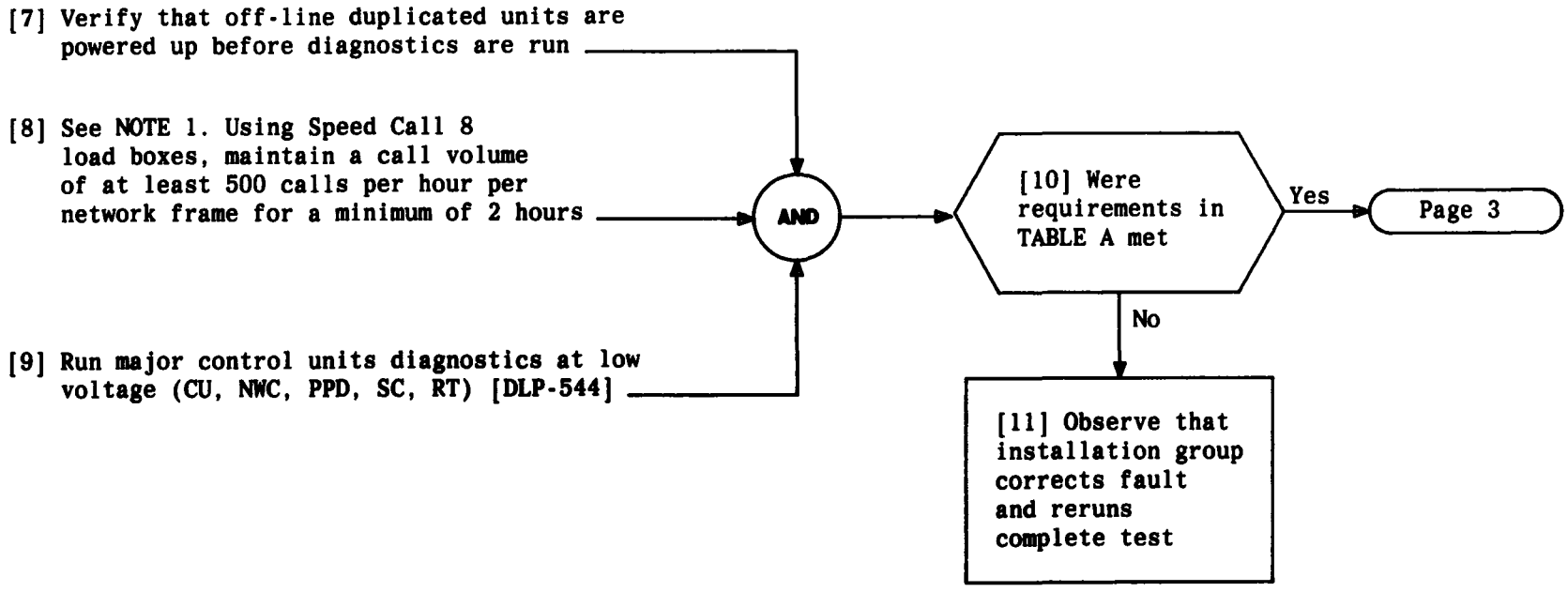

TABLE A	
CONDITION	RESULT
Calling Rate	At least 500 calls per hour, per network frame
Failure Rate	1 failure to complete in 10,000 calls
Malfunctions; (Not Definite Failures to Complete	5 in 10,000 calls

NOTE 1
The call volume of 500 calls per hour, per network frame, may be reduced if office is not equipped with enough service circuits to handle the 500 call rate

OBSERVE PROCEDURES AND RESULTS OF SIMULATED COMMERCIAL POWER FAILURE TESTS

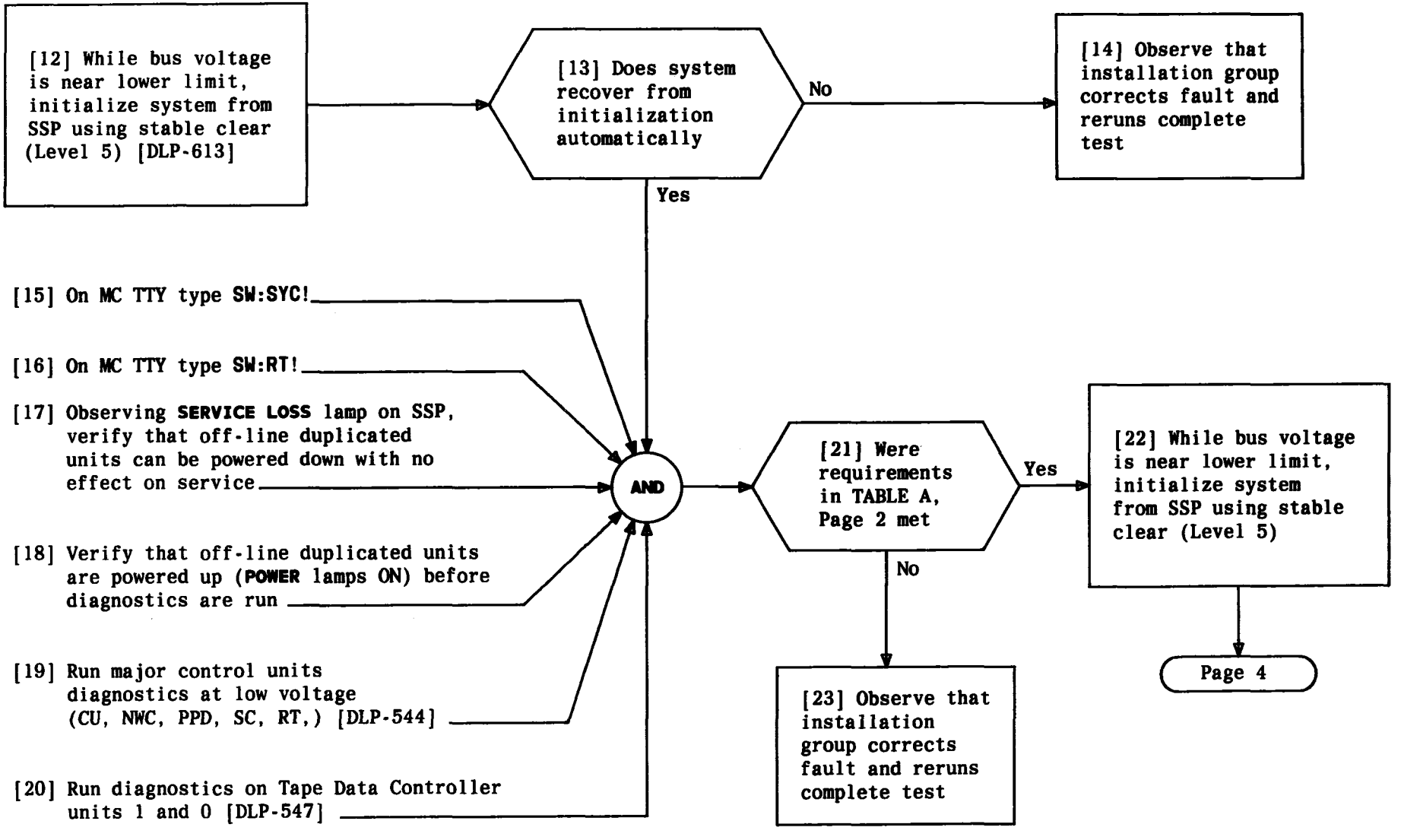

OBSERVE PROCEDURES AND RESULTS OF SIMULATED COMMERCIAL POWER FAILURE TESTS

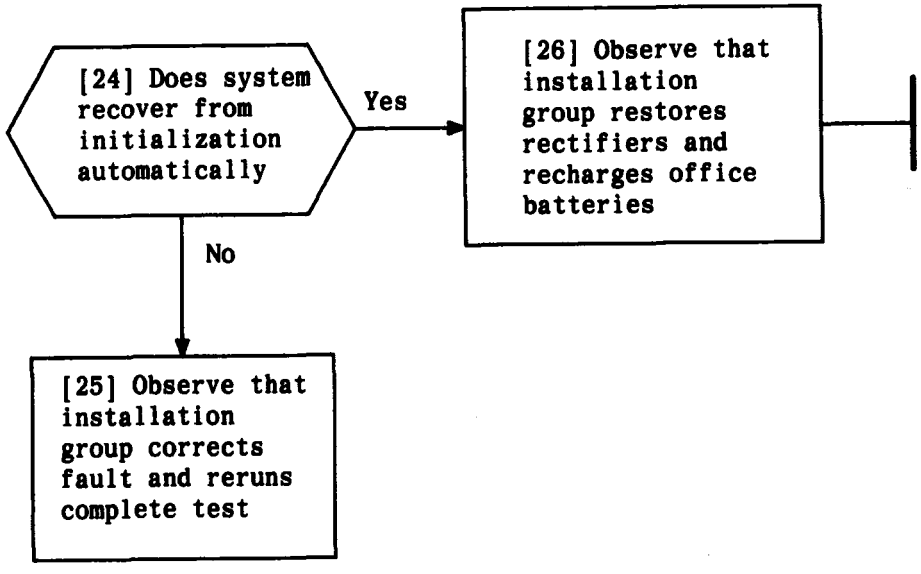

OBSERVE PROCEDURES AND RESULTS OF SIMULATED COMMERCIAL POWER FAILURE TESTS

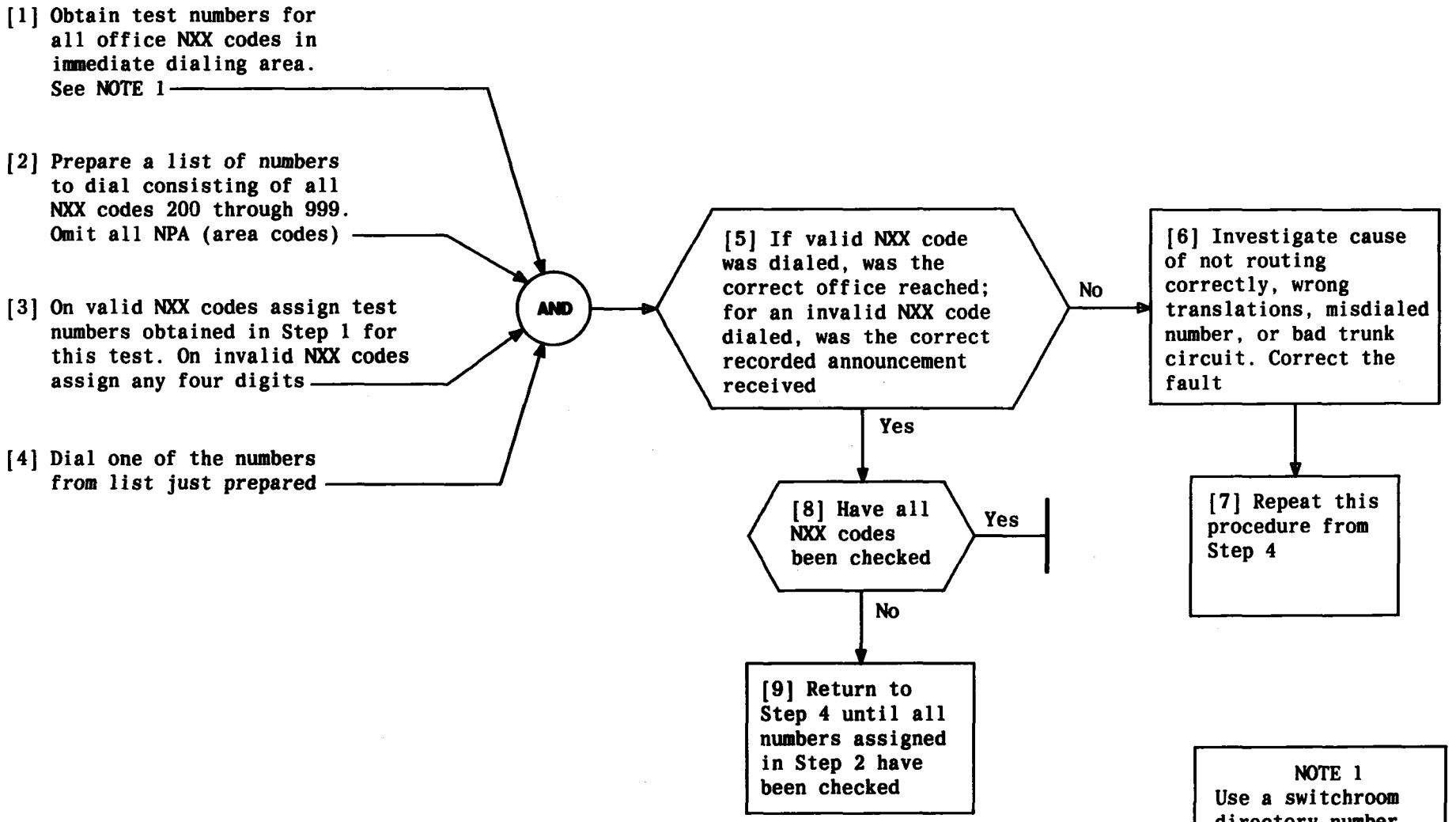

NOTE 1
Use a switchroom directory number or a test number that provides a distinctive office identity tone

TEST ROUTING TO ALL NXX CODES

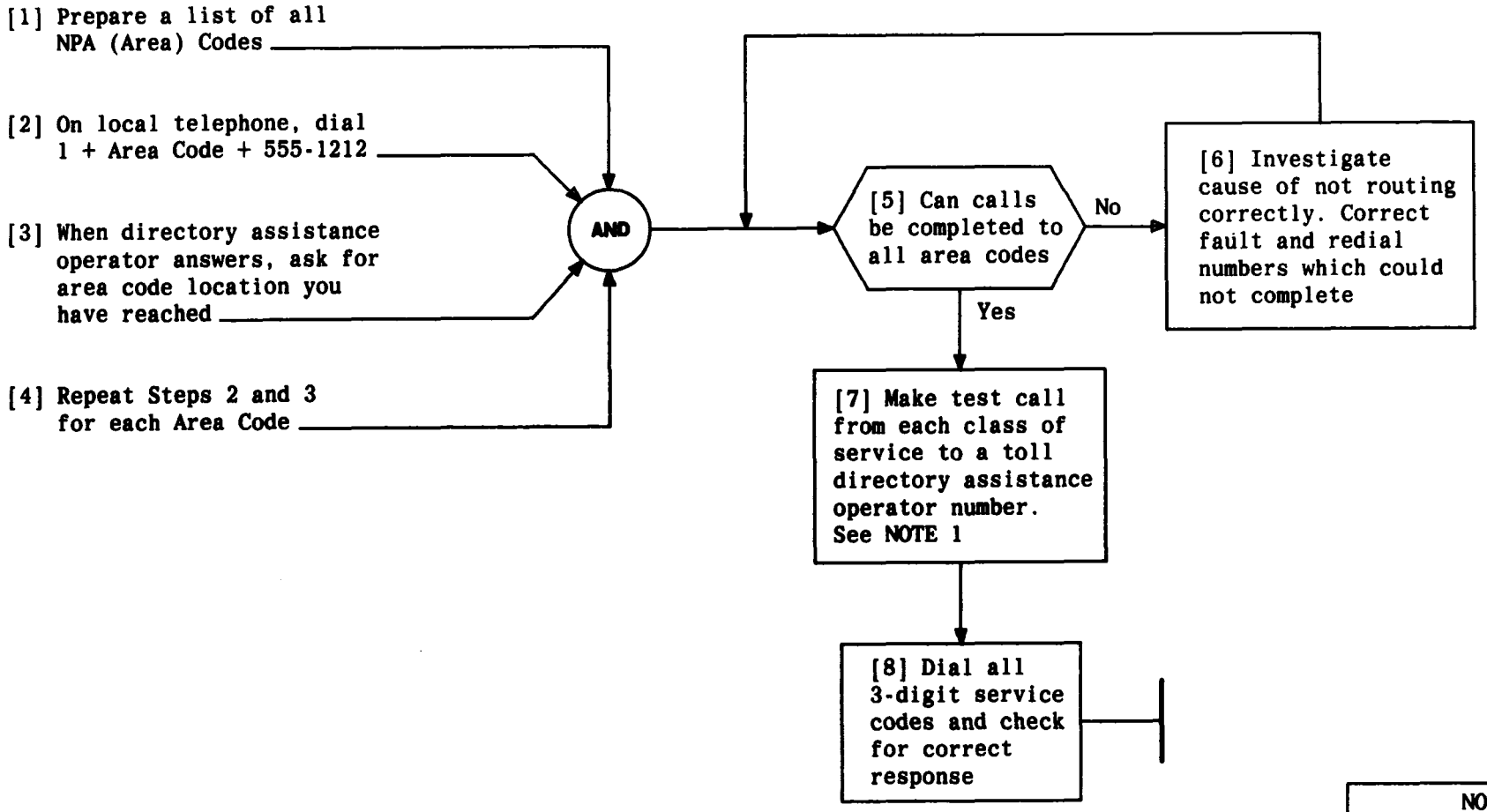

NOTE 1
In offices providing toll dialing on coin telephone service, dial 0 in lieu of 1 on coin class of service prior to dialing area code

Issue 3	AUG 1984
233-142-100	DLP
PAGE 1 of 1	631

TEST ROUTING TO ALL NPA (AREA) CODES

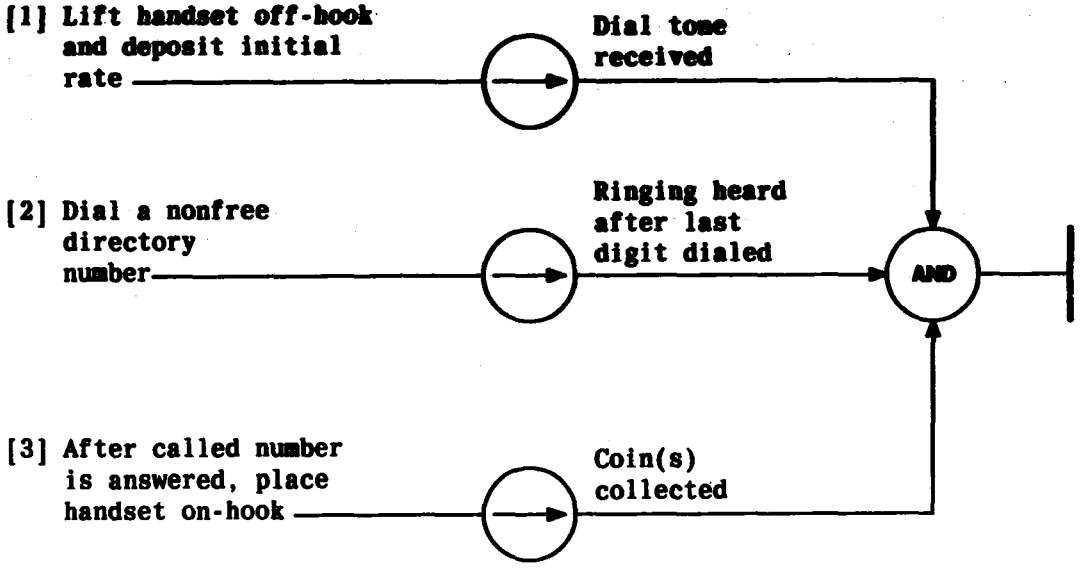

MAKE LOCAL CHARGE TEST

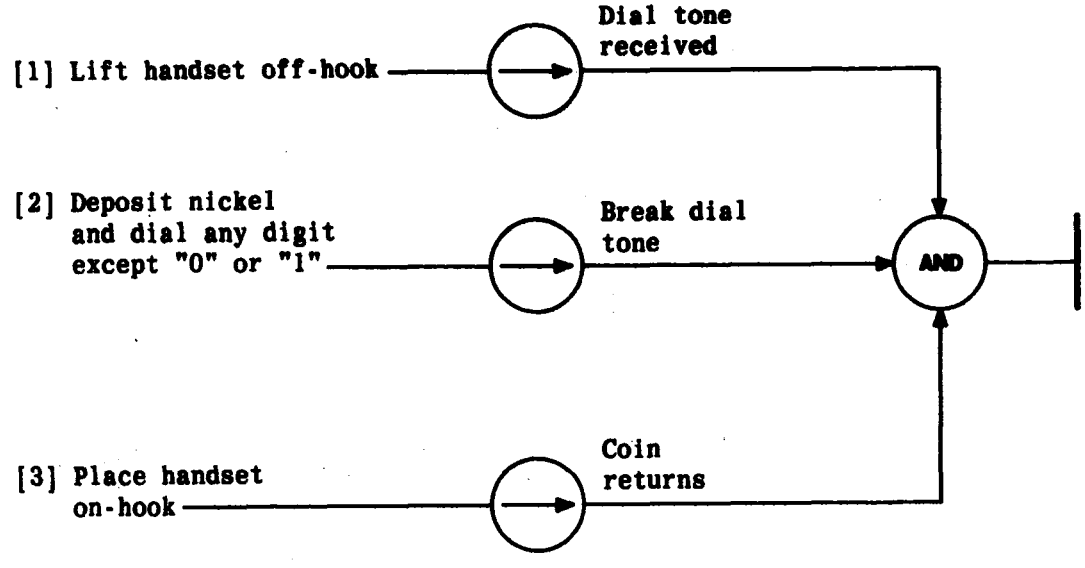

Issue 3	AUG 1984
233-142-100	DLP
PAGE 1 of 1	633

CHECK FOR REFUND AFTER ABANDON CALL

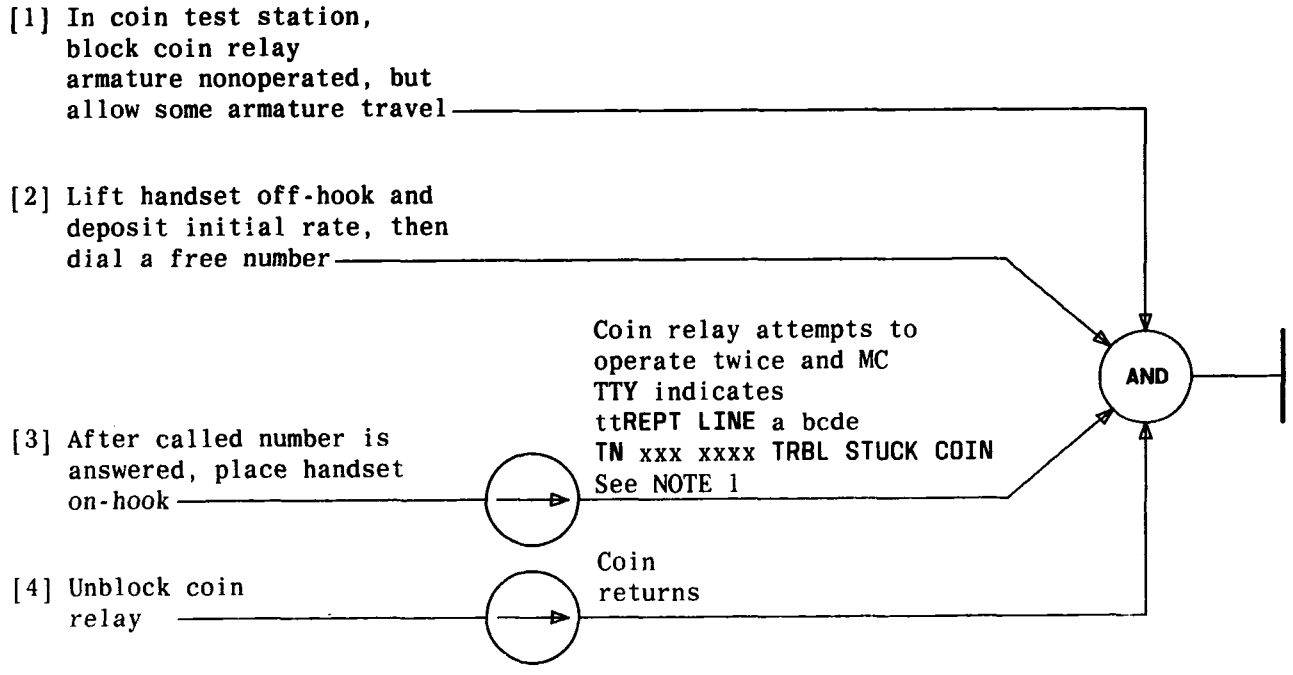

NOTE 1
a = Concentrator group
b = Switch group
c = Concentrator
d = Switch
e = Level
tt = Minutes of hour
xxx xxxx = Telephone number

Issue 3	AUG 1984
233-142-100	DLP
PAGE 1 of 1	634

CHECK STUCK COIN ALARM OPERATION

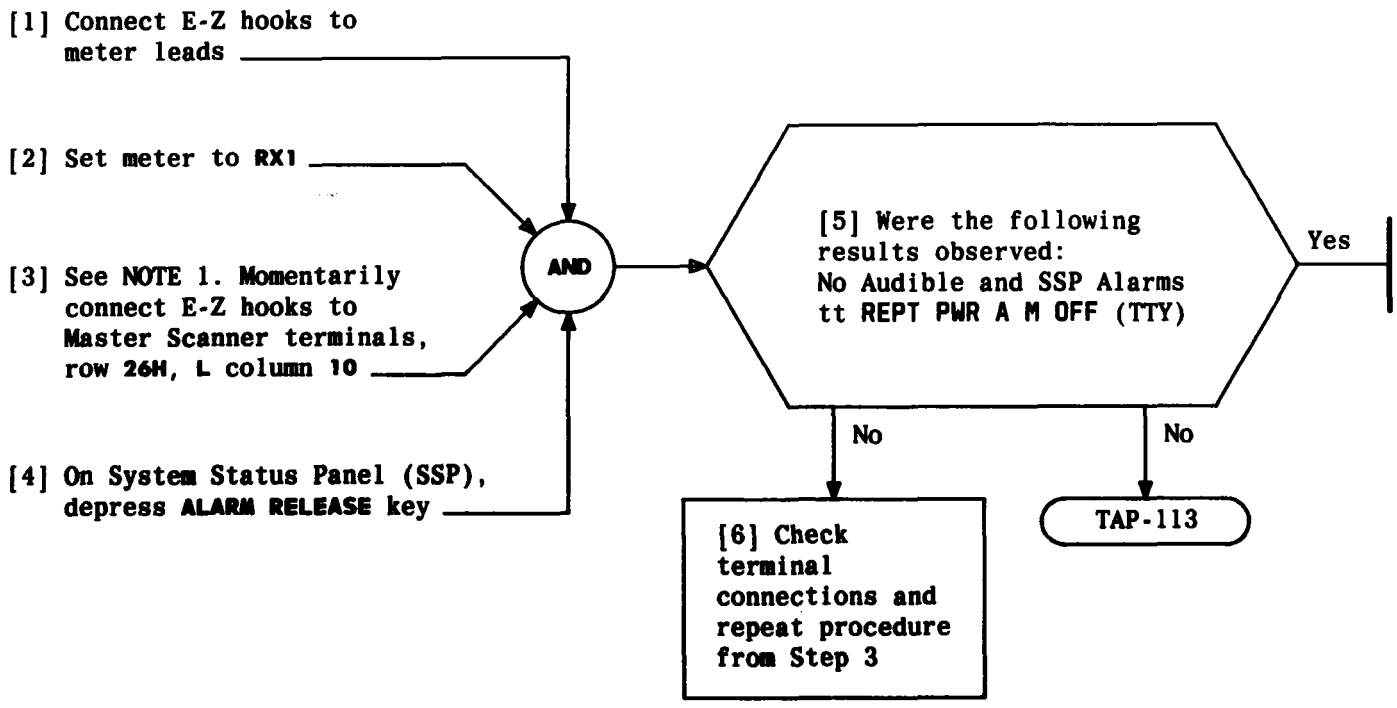

NOTE 1
Use care in connecting Master Scanner terminals. Improper connections cause erroneous results

Issue 3	AUG 1984
233-142-100	DLP
PAGE 1 of 1	635

TEST +24V FUSE ALARM

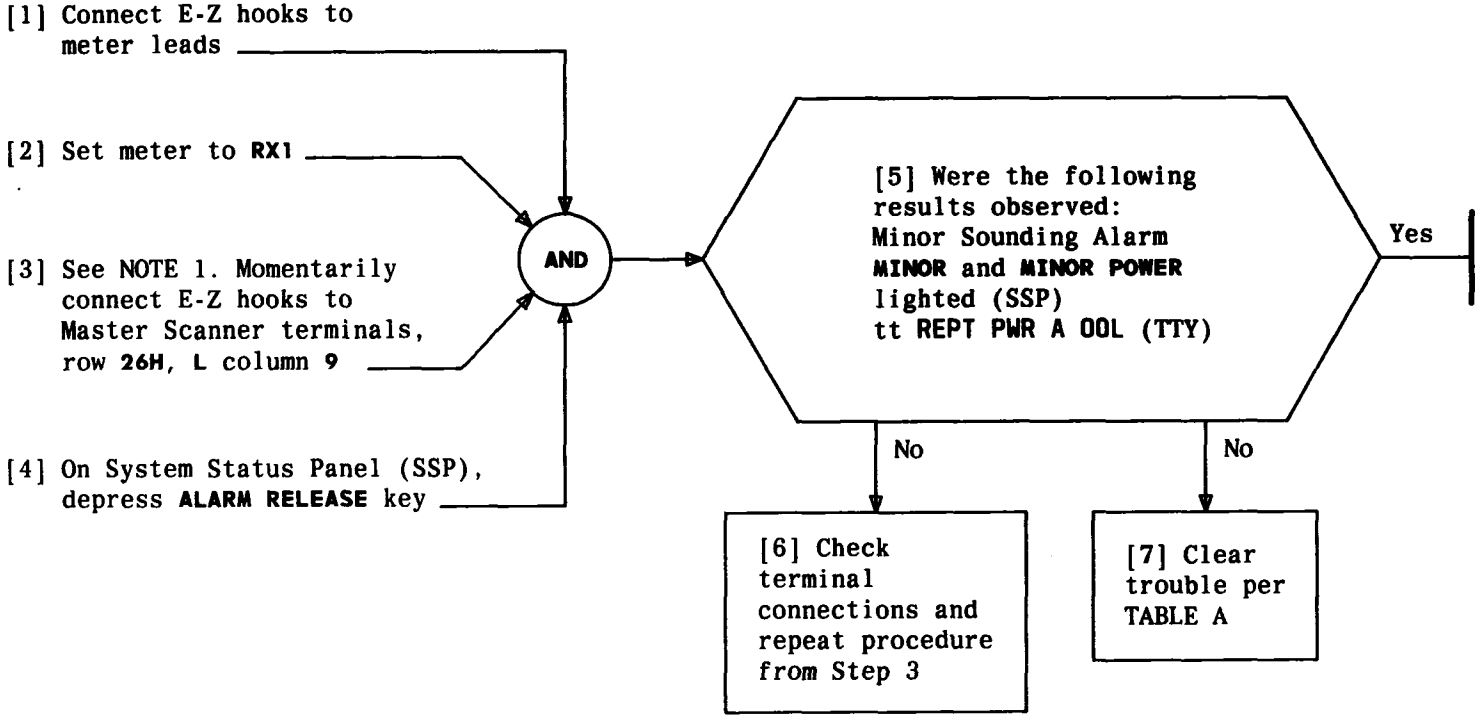

TABLE A		
INDICATOR LOCATION	INDICATION NOT OBSERVED	TROUBLE CLEARING DATA
Building	Minor Sounding Alarm	TAP-100
SSP	MINOR and MINOR POWER lighted	TAP-112
TTY	tt REPT PWR A OOL	TAP-113

NOTE 1
Use care in connecting Master Scanner terminals. Improper connections cause erroneous results

Issue 3	AUG 1984
233-142-100	DLP
PAGE 1 of 1	636

TEST +24V CONVERTER FAILURE ALARM

[1] At low profile distributing frame, shelf H or G, locate universal trunk circuit cross-connection terminal block

[2] At connecting block, locate row (0-23) of terminals which corresponds to circuit pack mounting position (0-23) on equipment frame [FIG. 1 and 2]

AND

[3] Install connections required by circuit order

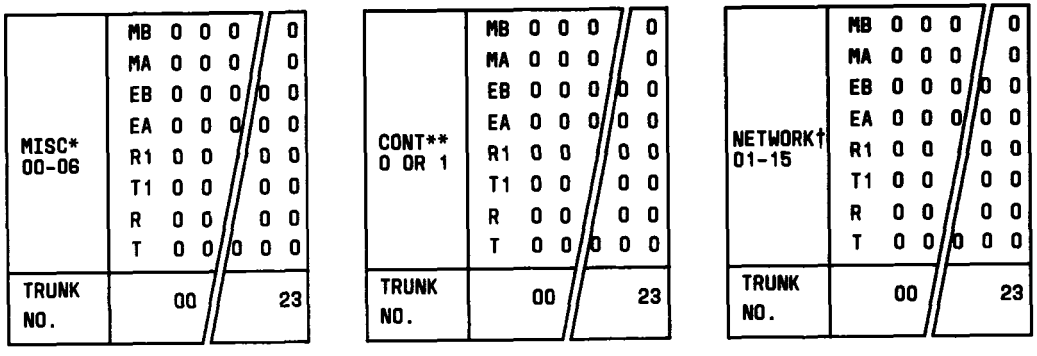

* TRUNKS TERMINATED ON THESE BLOCKS ARE LOCATED ON MISCELLANEOUS FRAMES (00-06)
** TRUNKS TERMINATED ON THESE BLOCKS ARE LOCATED ON CONTROL FRAME 0 OR 1
† TRUNKS TERMINATED ON THESE BLOCKS ARE LOCATED ON NETWORK FRAMES 01-15

FIG. 1 - Universal Trunk Terminations - Connecting Blocks

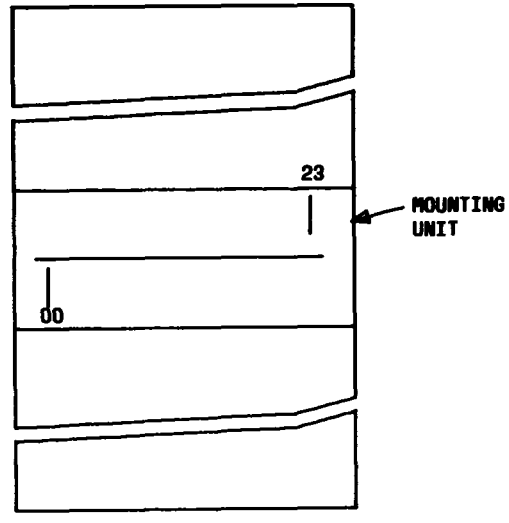

FIG. 2 - Universal Trunk Mounting Positions on Miscellaneous, Network, or Control Frame

INSTALL UNIVERSAL TRUNK WIRING AT DISTRIBUTING FRAME

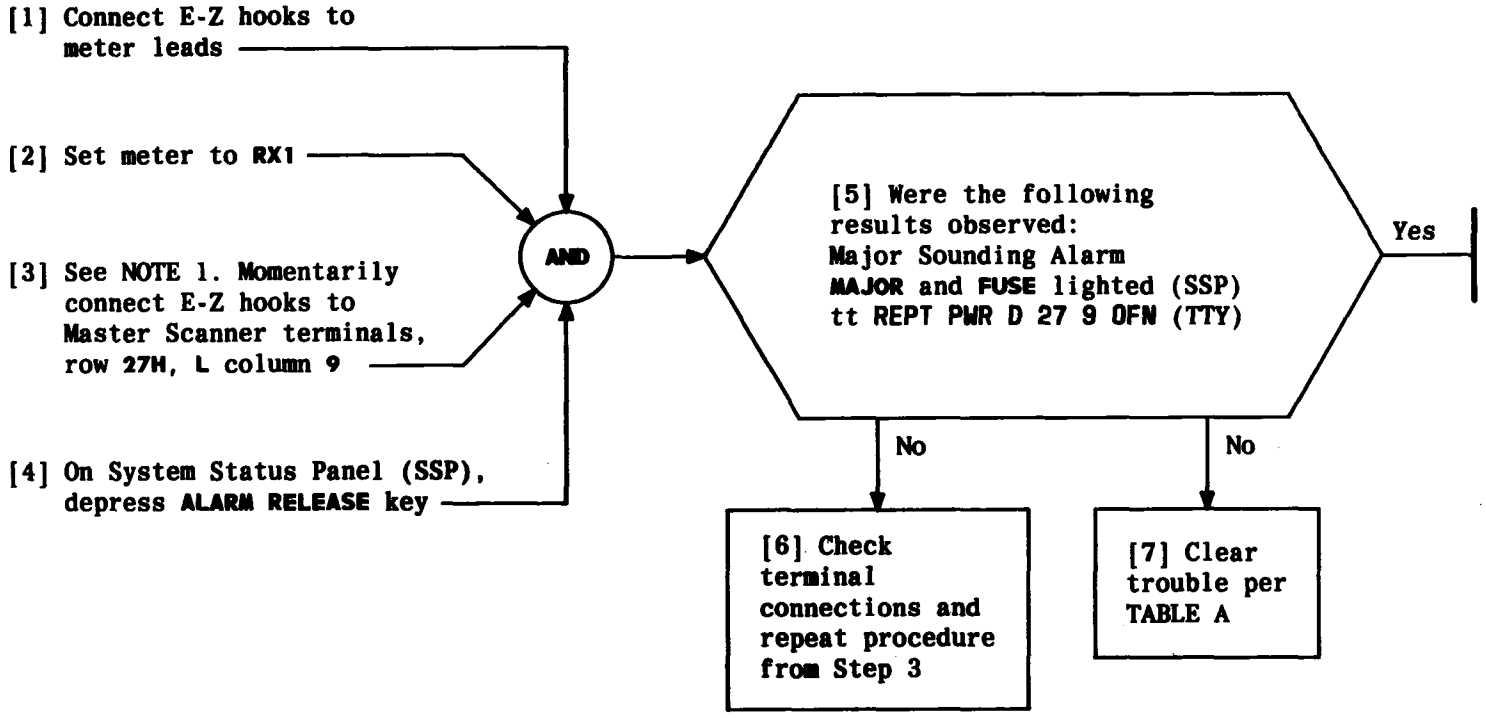

TABLE A		
INDICATOR LOCATION	INDICATION NOT OBSERVED	TROUBLE CLEARING DATA
Building	Major Sounding Alarm	TAP-100
SSP	MAJOR and FUSE lighted	TAP-112
TTY	tt REPT PWR D 27 9 OFN	TAP-113

NOTE 1
Use care in connecting Master Scanner terminals. Improper connections cause erroneous results

TEST +48V CONVERTER FUSE ALARM

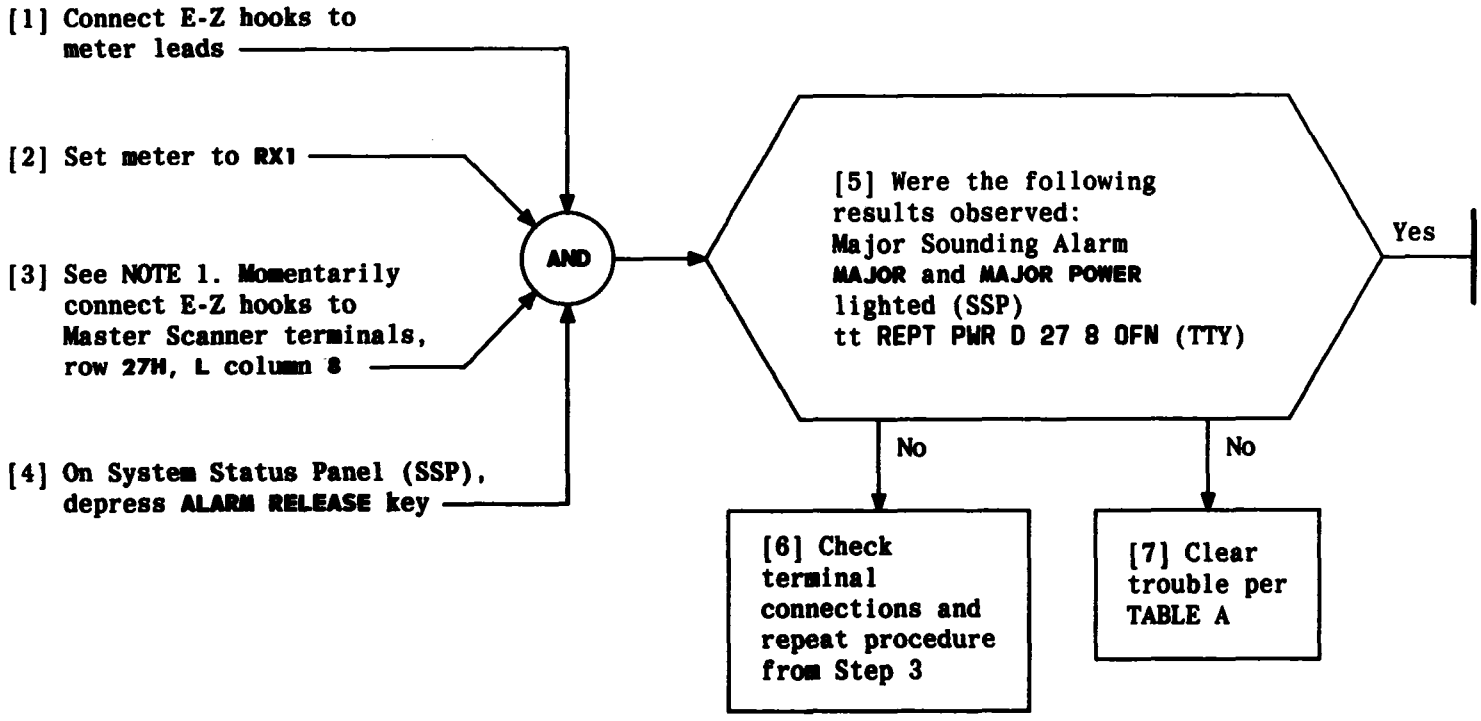

TABLE A		
INDICATOR LOCATION	INDICATION NOT OBSERVED	TROUBLE CLEARING DATA
Building	Major Sounding Alarm	TAP-100
SSP	MAJOR and MAJOR POWER lighted	TAP-112
TTY	tt REPT PWR D 27 8 OFN	TAP-113

NOTE 1
Use care in connecting Master Scanner terminals. Improper connections cause erroneous results

TEST +48V CONVERTER FAILURE ALARM

[1] Identify circuit (0-3) and lead designations for the CDPR circuit being installed [FIG. 1]

[2] At distributing frame, Shelf J, Block 1 or Block 2, locate CDPR terminals DTO_ and DRO_ for the circuit being installed [DLP-641]

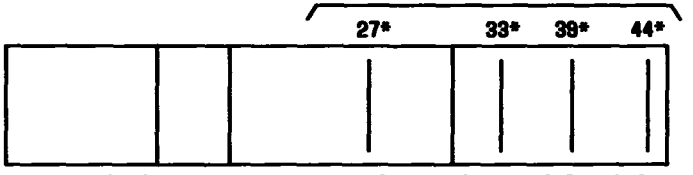

* CPDR CIRCUIT PACK MOUNTING POSITIONS ARE AS FOLLOWS:

CKT	CKT PACK POSITION	CDPR CKT PACK	LEAD DESIGNATION AT DISTRIBUTING FRAME
0	27	FB367	DTO-0, DRO-0
1	33	FB367	DTO-1, DRO-1
2	39	FB367	DTO-2, DRO-2
3	44	FB367	DTO-3, DRO-3

FIG. 1

IDENTIFY CDPR CIRCUIT TIP AND RING TERMINATIONS AT DISTRIBUTING FRAME

At Distributing Frame:

1. Locate terminals identified for circuit being installed as shown in FIG. 1

End of procedure

CABLED FROM FRAME		TEST							CONTROL 0 / BAY 1	CONTROL 0 / BAY 1		CONT 1 / BAY 1	NETWORK 01		NETWORK 02		NETWORK 03		CONTROL 0						NETWORK 04	
																			BAY 0 EQL 118		BAY 1 EQL 122					
CIRCUIT		PERIPHERAL TEST							TEST VERT AND PWR CONT	TEST VERT AND PWR CONT	MF TRMTR	MF TRMTR	REG RING	COPR	REG RING	COPR	REG RING	COPR	REG RING	COPR	REG RING	COPR	REG RING	COPR	REG RING	COPR
SHELF J BLOCK 1	ROW 7	TDNR	CPNR	SRNR1	TENR0		ITTTR21	ITTTR31	PCR0		R3	R3		DR0-3		DR0-3		DR0-3		DR0-3		DR0-3		DR0-3		DR0-3
	6	TDNT	CPNT	SRNT1	TENT0		ITTTT21	ITTTT31	PCT0		T3	T3		DT0-3		DT0-3		DT0-3		DT0-3		DT0-3		DT0-3		DT0-3
	5	TPPDR	ITNR11	SRNR0	TPNR00		ITTTG11	ITTTG21	PWR1		R2	R2	R2	DR0-2	R2	DR0-2	R2	DR0-2	R2	DR0-2	R2	DR0-2	R2	DR0-2	R2	DR0-2
	4	TPPDT	ITNT11	SRNT0	TPNT00		ITTS14	ITTTS21	PWT1		T2	T2	T2	DT0-2	T2	DT0-2	T2	DT0-2	T2	DT0-2	T2	DT0-2	T2	DT0-2	T2	DT0-2
	3	TPNR2	ITNR10	DTNR	TPNR10	LENR	ITTTR20	ITTTR30	PWR0		R1	R1	R1	DR0-1	R1	DR0-1	R1	DR0-1	R1	DR0-1	R1	DR0-1	R1	DR0-1	R1	DR0-1
	2	TPRNG0	ITNT10	DTNT	TPNT10	LENT	ITTTT20	ITTTT30	PWT0		T1	T1	T1	DT0-1	T1	DT0-1	T1	DT0-1	T1	DT0-1	T1	DT0-1	T1	DT0-1	T1	DT0-1
	1	TPPDR1	LIR	TTNR	RTR	TENR1	ITTTG10	ITTTG20	SIBR		R0	R0	R0	DR0-0	R0	DR0-0	R0	DR0-0	R0	DR0-0	R0	DR0-0	R0	DR0-0	R0	DR0-0
	0	TPPDT1	LIT	TTNT	RTT	TENT1	ITTTS10	ITTTS20	SIB		T0	T0	T0	DT0-0	T0	DT0-0	T0	DT0-0	T0	DT0-0	T0	DT0-0	T0	DT0-0	T0	DT0-0
	COLUMN	00	01	02	03	04	05	06	07	08	09	10	11	12	13	14	15	16	17	18	19	20	21	22	23	24

FIG. 1 – Distributing Frame Terminals (Page 1)

LOCATE SERVICE AND TEST CIRCUIT TERMINALS AT DISTRIBUTING FRAME

CABLED FROM FRAME		NETWORK 05		NETWORK 06		NETWORK 07		NETWORK 08		NETWORK 09		NETWORK 10		NETWORK 11		NETWORK 12		NETWORK 13		NETWORK 14		NETWORK 15		TEST		
CIRCUIT		REG RING	CDPR	REG RING	CDPR	REG RING	CDPR	REG RING	CDPR	REG RING	CDPR	REG RING	CDPR	REG RING	CDPR	REG RING	CDPR	REG RING	CDPR	REG RING	CDPR	REG RING	CDPR	PERIPHERAL TEST		
SHELF J BLOCK 2	ROW 7		DRO-3		DRO-3		DRO-3		DRO-3		DRO-3		DRO-3		DRO-3		DRO-3		DRO-3		DRO-3		DRO-3	TTYPLR10	TTYNR11	TTYR11
	6		DTO-3		DTO-3		DTO-3		DTO-3		DTO-3		DTO-3		DTO-3		DTO-3		DTO-3		DTO-3		DTO-3	TTYPLT10	TTYNT11	TTYT11
	5	R2	DRO-2	R2	DRO-2	R2	DRO-2	R2	DRO-2	R2	DRO-2	R2	DRO-2	R2	DRO-2	R2	DRO-2	R2	DRO-2	R2	DRO-2	R2	DRO-2	TTYPLR00	TTYNR01	TTYR01
	4	T2	DTO-2	T2	DTO-2	T2	DTO-2	T2	DTO-2	T2	DTO-2	T2	DTO-2	T2	DTO-2	T2	DTO-2	T2	DTO-2	T2	DTO-2	T2	DTO-2	TTYPLT00	TTYNT01	TTYT01
	3	R1	DRO-1	R1	DRO-1	R1	DRO-1	R1	DRO-1	R1	DRO-1	R1	DRO-1	R1	DRO-1	R1	DRO-1	R1	DRO-1	R1	DRO-1	R1	DRO-1	TTYNR10	TTYR10	TTYPLR11
	2	T1	DTO-1	T1	DTO-1	T1	DTO-1	T1	DTO-1	T1	DTO-1	T1	DTO-1	T1	DTO-1	T1	DTO-1	T1	DTO-1	T1	DTO-1	T1	DTO-1	TTYNT10	TTYT10	TTYPLT11
	1	R0	DRO-0	R0	DRO-0	R0	DRO-0	R0	DRO-0	R0	DRO-0	R0	DRO-0	R0	DRO-0	R0	DRO-0	R0	DRO-0	R0	DRO-0	R0	DRO-0	TTYNR00	TTYR00	TTYPLR01
	0	T0	DTO-0	T0	DTO-0	T0	DTO-0	T0	DTO-0	T0	DTO-0	T0	DTO-0	T0	DTO-0	T0	DTO-0	T0	DTO-0	T0	DTO-0	T0	DTO-0	TTYNT00	TTYT00	TTYPLT01
	COLUMN	00	01	02	03	04	05	06	07	08	09	10	11	12	13	14	15	16	17	18	19	20	21	22	23	24

FIG. 1 – Distributing Frame Terminals (Page 2)

LOCATE SERVICE AND TEST CIRCUIT TERMINALS AT DISTRIBUTING FRAME

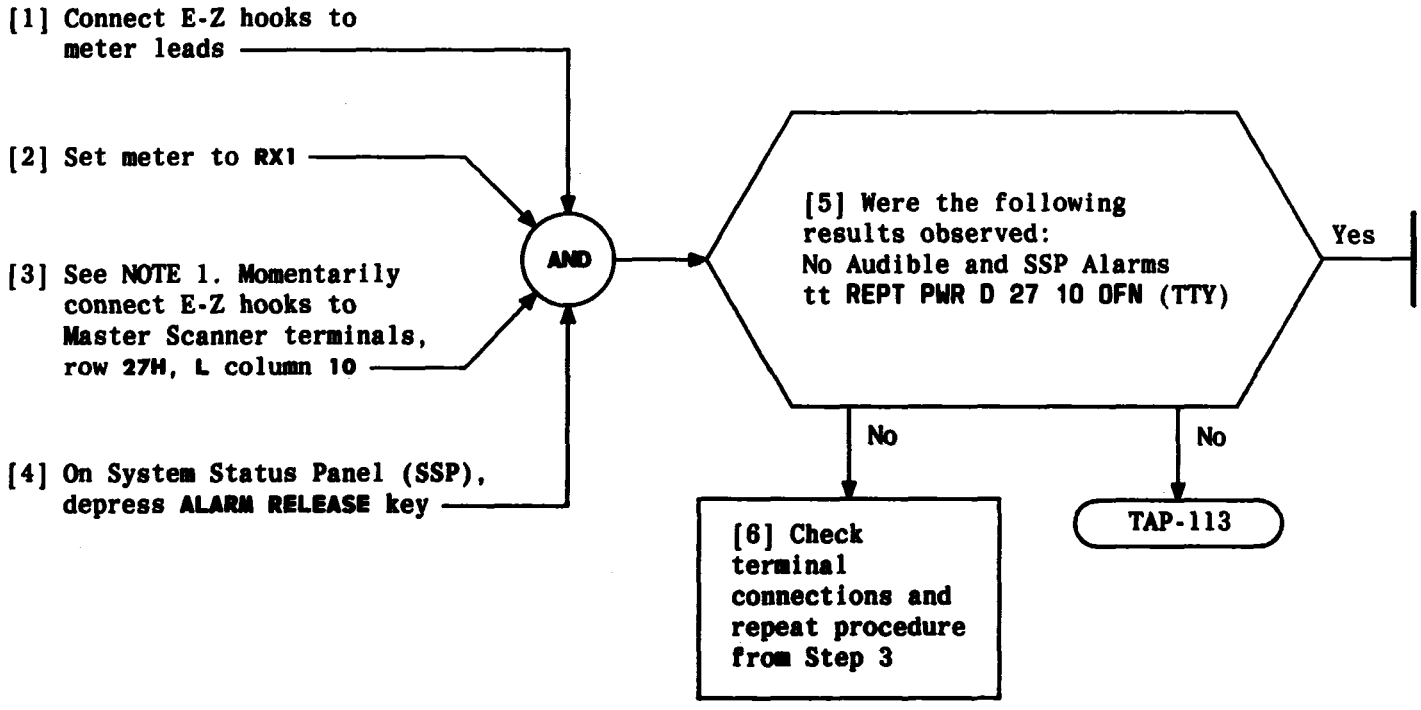

NOTE 1
Use care in connecting Master Scanner terminals. Improper connections cause erroneous results

Issue 3	AUG 1984
233-142-100	DLP
PAGE 1 of 1	642

TEST +48V CONVERTER MANUAL OFF ALARM

[1] Identify circuit (0-2) and lead designations for the regular ringing circuit being installed [FIG. 1]

AND

[2] At distributing frame, shelf J, block 1 or block 2, locate regular ringing circuit terminals T_ and R_ [DLP-641]

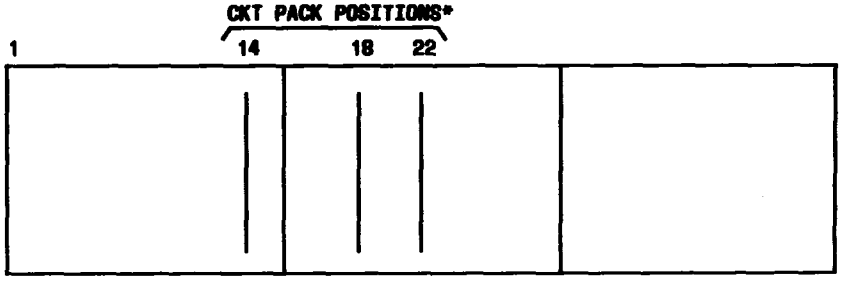

* CKT PACK MOUNTING POSITIONS AND LEAD DESIGNATIONS ARE AS FOLLOWS:

CKT	CKT PACK POSITION	CKT PACK	LEAD DESIGNATIONS AT DISTRIBUTING FRAME
0	14	FB 358	T0, R0
1	18	FB 358	T1, R1
2	22	FB 358	T2, R2

FIG. 1 – Regular Ringing Circuit Pack Positions

IDENTIFY REGULAR RINGING CIRCUIT TIP AND RING TERMINATIONS AT DISTRIBUTING FRAME

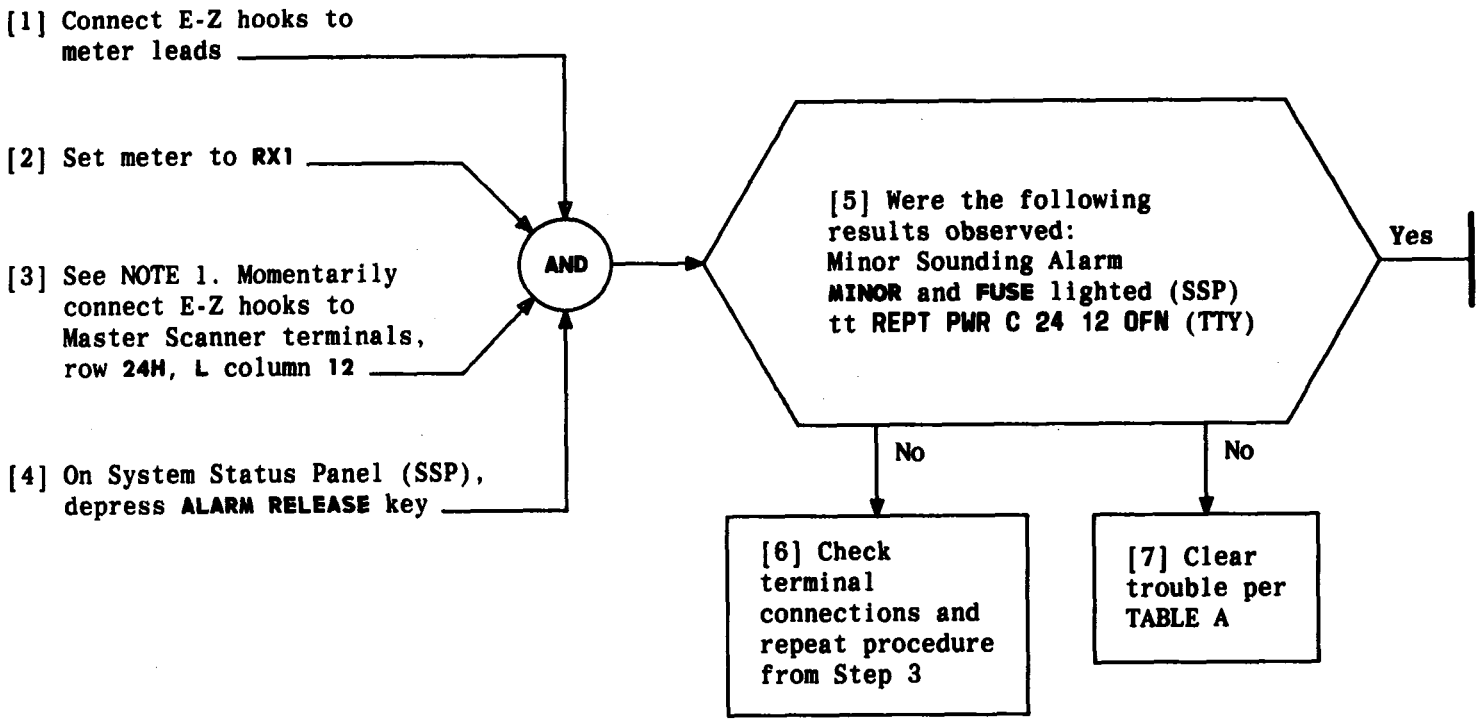

TABLE A		
INDICATOR LOCATION	INDICATION NOT OBSERVED	TROUBLE CLEARING DATA
Building	Minor Sounding Alarm	TAP-100
SSP	MINOR and FUSE lighted	TAP-112
TTY	tt REPT PWR C 24 12 OFN	TAP-113

NOTE 1
Use care in connecting Master Scanner terminals. Improper connections cause erroneous results

TEST ±130V CONVERTER FUSE ALARM

[1] Identify circuit (0-3) and distributing frame terminations for multifrequency transmitter circuit being installed [FIG. 1]

[2] At distributing frame connector block stenciled per T3H404-11, locate T- and R- terminals [DLP-641]

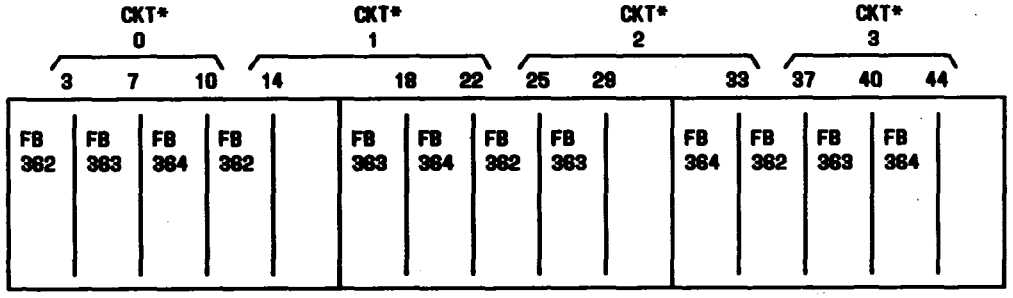

* TERMINATIONS AT DISTRIBUTING FRAME< SHELF J, BLOCK 1 ARE AS FOLLOWS:

CKT	LEAD DESIGNATIONS
0	T0, R0
1	T1, R1
2	T2, R2
3	T3, R3

FIG. 1 – *Identification of Multifrequency Transmitter Circuit at Equipment Frame and at Distributing Frame*

IDENTIFY MULTIFREQUENCY TRANSMITTER CIRCUIT TIP AND RING TERMINATIONS AT DISTRIBUTING FRAME

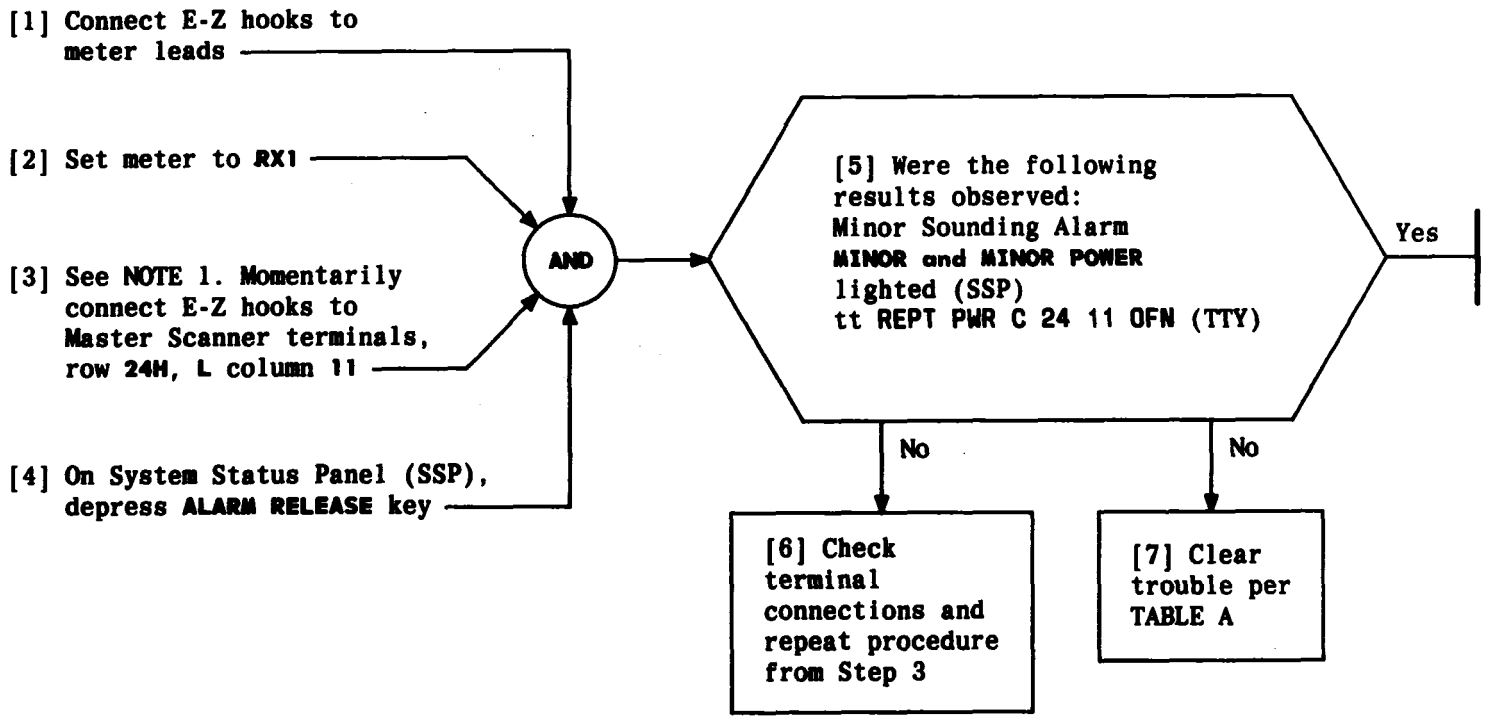

TABLE A		
INDICATOR LOCATION	INDICATION NOT OBSERVED	TROUBLE CLEARING DATA
Building	Minor Sounding Alarm	TAP-100
SSP	MINOR and MINOR POWER lighted	TAP-112
TTY	tt REPT PWR C 24 11 OFN	TAP-113

NOTE 1
Use care in connecting Master Scanner terminals. Improper connections cause erroneous results

TEST ±130V CONVERTER FAILURE ALARM

[1] At distributing frame shelf J, connecting block wired for 7A or 13A announcement, identify terminals for the announcement to be connected

[2] At distributing frame shelf J, connecting block stenciled T3H411-11 identify terminals for the tone and announcement circuit to be installed

AND

[3] Have other tone and announcement circuits already been connected to the announcement

No

[4] Install straps and cross-connections [TABLE A]

Yes

[5] Install straps and cross-connections [TABLE B]

TABLE A
STRAPS AND CROSS-CONNECTIONS FOR FIRST TONE AND ANNOUNCEMENT CIRCUIT ASSIGNED TO 7A ANNOUNCEMENT

CONNECT	TO	
FIRST TONE AND ANNOUNCEMENT	NETWORK (OE TERMINALS)	7A ANNOUNCEMENT
T0_	T	
R0_	R	
T1_	T	
R1_	R	
BA_		B_
C0_		MU2_
ST1A_		ST_
STA_		ST1_
TA0_*		T_
RA0_*		R_
TA1_*		
RA1_*		

* Strap TA0 and TA1, RA0 and RA1

INSTALL WIRING FOR TONE AND ANNOUNCEMENT CIRCUIT (SD-3H411-01 [CPS 383]) USED WITH 7A OR 13A ANNOUNCEMENT

TABLE B
STRAPS AND CROSS-CONNECTIONS FOR SECOND OR SUBSEQUENT TONE AND ANNOUNCEMENT CIRCUIT ASSIGNED TO 7A ANNOUNCEMENT

CONNECT	TO
TONE AND ANNOUNCEMENT	NETWORK (OE TERMINALS)
T0_	T
R0_	R
T1_	T
R1_	R
BA_‡	
C0_‡	
ST1A_†	
STA_†	
TA0_*†	
RA0_*†	
TA1_*†	
RA1_*†	

* Strap TA0 and RA0, RA0 and RA1

† Multiple to other tone and announcement circuits assigned to the same 7A announcement

‡ No connection required

INSTALL WIRING FOR TONE AND ANNOUNCEMENT CIRCUIT (SD-3H411-01 [CPS 383]) USED WITH 7A OR 13A ANNOUNCEMENT

[1] At distributing frame, shelf J connecting block wired per R&TTS ckt T82255-30, locate terminals for the tone identified by the circuit order

[2] At distributing frame, shelf J, connecting block wired per T3H411-11, identify terminals for the tone and announcement circuit being installed [TABLE A]

[3] Install cross-connections as shown in TABLE A

[4] Locate tone and announcement circuit pack mounting position at control or miscellaneous frame [FIG. 1]

AND

TABLE A

CROSS-CONNECTIONS		
CONNECT	TO	
TONE AND ANNOUNCEMENT CIRCUIT	NETWORK (OE) TERMINALS	RINGING AND TONE PLANT
TO-	T	
RO-	R	
T1-	T	
R1-	R	
TTO-		Tone connections must be shown on circuit order
RTO-		
TT1-		
RA1-		

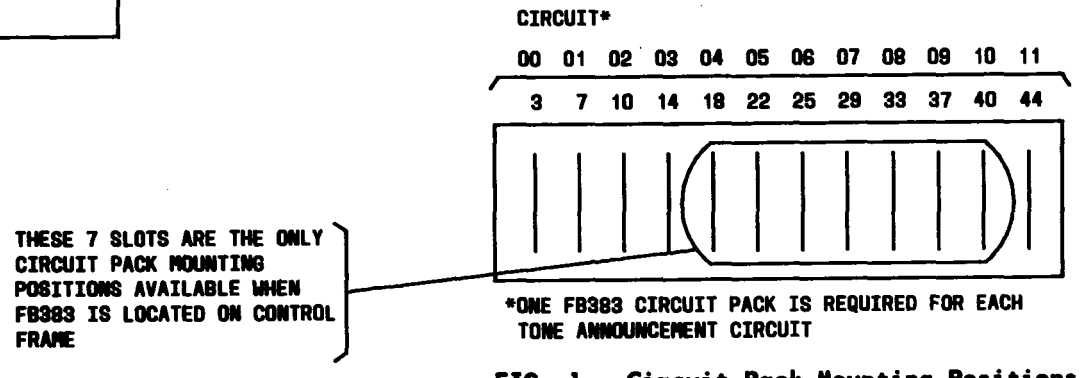

FIG. 1 – Circuit Pack Mounting Positions On Miscellaneous Frame (All 12 slots reserved for FB383)

INSTALL WIRING FOR TONE AND ANNOUNCEMENT CIRCUIT (SD-3H411-01) USED FOR TONE SERVICE

[1] Locate coin control circuit pack mounting position at control or miscellaneous frame [FIG. 1]

[2] At distributing frame, shelf J, connector block stenciled T3H411-11, identify cross-connection terminals for coin circuit being installed [FIG. 2]

AND

[3] At distributing frame, cross-connect coin control circuit T and R terminals to network T and R (OE) terminals identified on circuit order

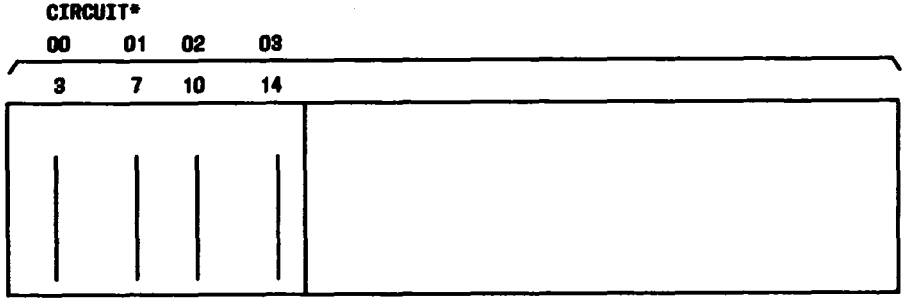

*ONE FB423 CIRCUIT PACK IS REQUIRED FOR EACH COIN CONTROL CIRCUIT

FIG. 1 - Circuit Pack Mounting Positions

89A1-100 CONNECTING BLOCK SHELF J BAY 03				
	TOP TERM NO.		007	017
	ROW	7	R1-01	R1-03
		6	T1-01	T1-03
		5	R0-01	R0-03
		4	T0-01	T0-03
		3	R1-00	R1-02
		2	T1-00	T1-02
		1	R0-00	R0-02
		0	T0-00	T0-02
	BOTTOM TERM NO.		000	010
	COLUMN		00	01

FIG. 2 – Coin Control Circuit T and R Terminals

INSTALL WIRING FOR COIN CONTROL CIRCUIT (SD-3H411-01 [CPS 423])

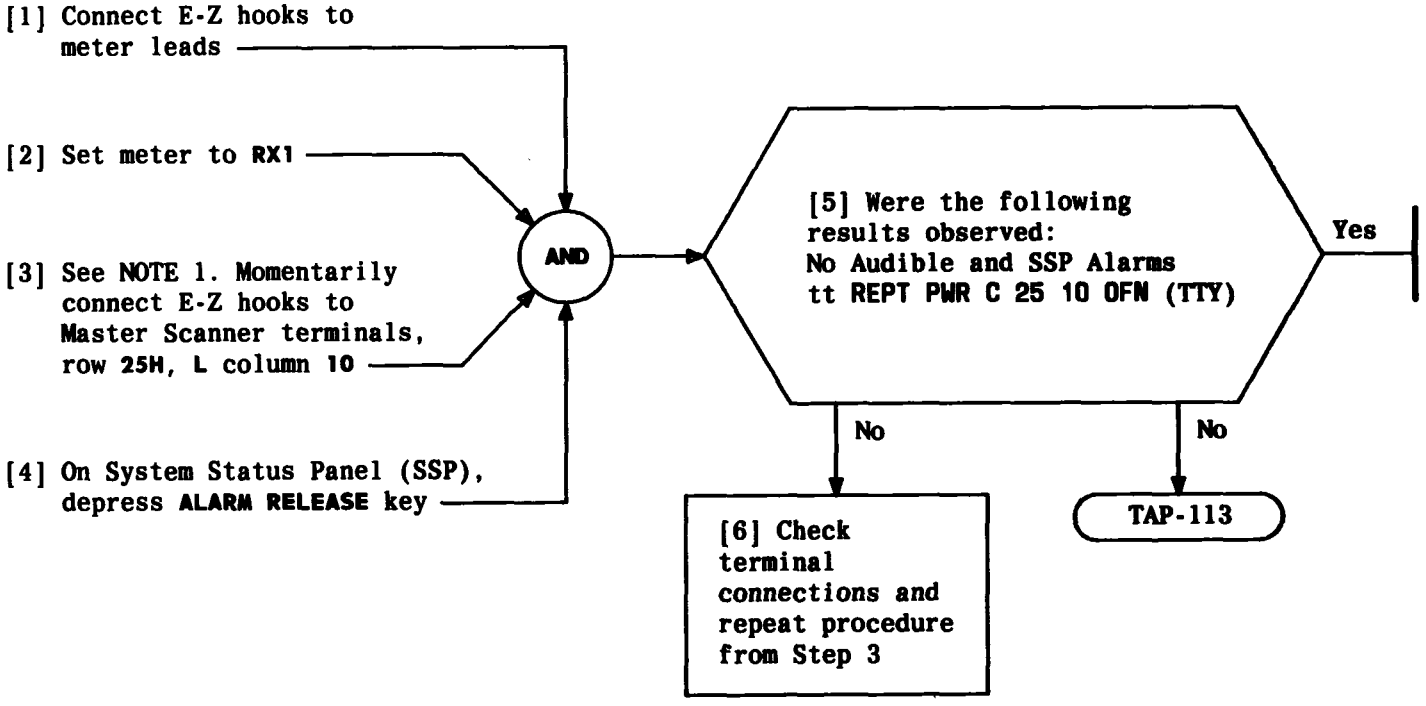

NOTE 1
Use care in connecting Master Scanner terminals. Improper connections cause erroneous results

Issue 3	AUG 1984
233-142-100	DLP
PAGE 1 of 1	650

TEST ±130V CONVERTER MANUAL OFF ALARM

[1] At distributing frame, shelf J connecting block wired for 7A or 13A ANNOUNCEMENT, identify terminals for announcement machine and KS-20449, L1 Amplifier

[2] At distributing frame, shelf J, connecting block wired per T3H411-11, identify terminals for remote recorded announcement circuit to be installed

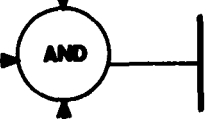

[3] Cross-connect terminals [TABLE A]

TABLE A
CROSS-CONNECTIONS

CONNECT	TO		
TONE AND ANNOUNCEMENT CKT	NETWORK (OE) TERMINALS	KS-20449 L1 AMPLIFIER	ANNOUNCEMENT SET
T0-11 R0-11	T R		
TA0-11 RA0-11		T2 R2	
TA1-11 RA1-11 BA-11 CO-11 ST1A-11 STA-11 DA-11 DL-11			T R B MU2 ST1 ST D DL1

INSTALL WIRING FOR REMOTE RECORDED ANNOUNCEMENT CIRCUIT (SD3H411-01 [CPS 426] OR [CPS 686])

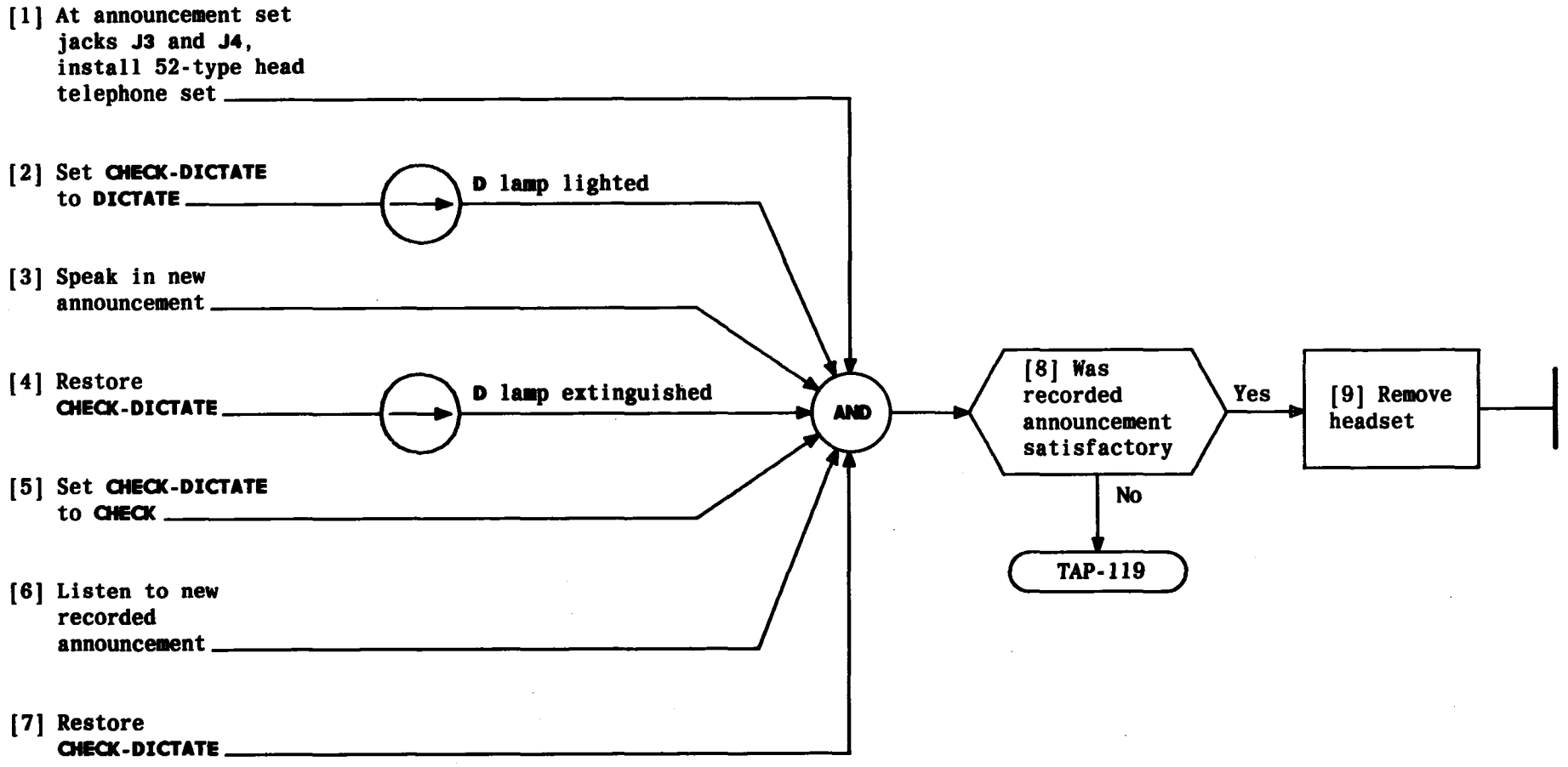

RECORD ANNOUNCEMENT AT 7A ANNOUNCEMENT SET

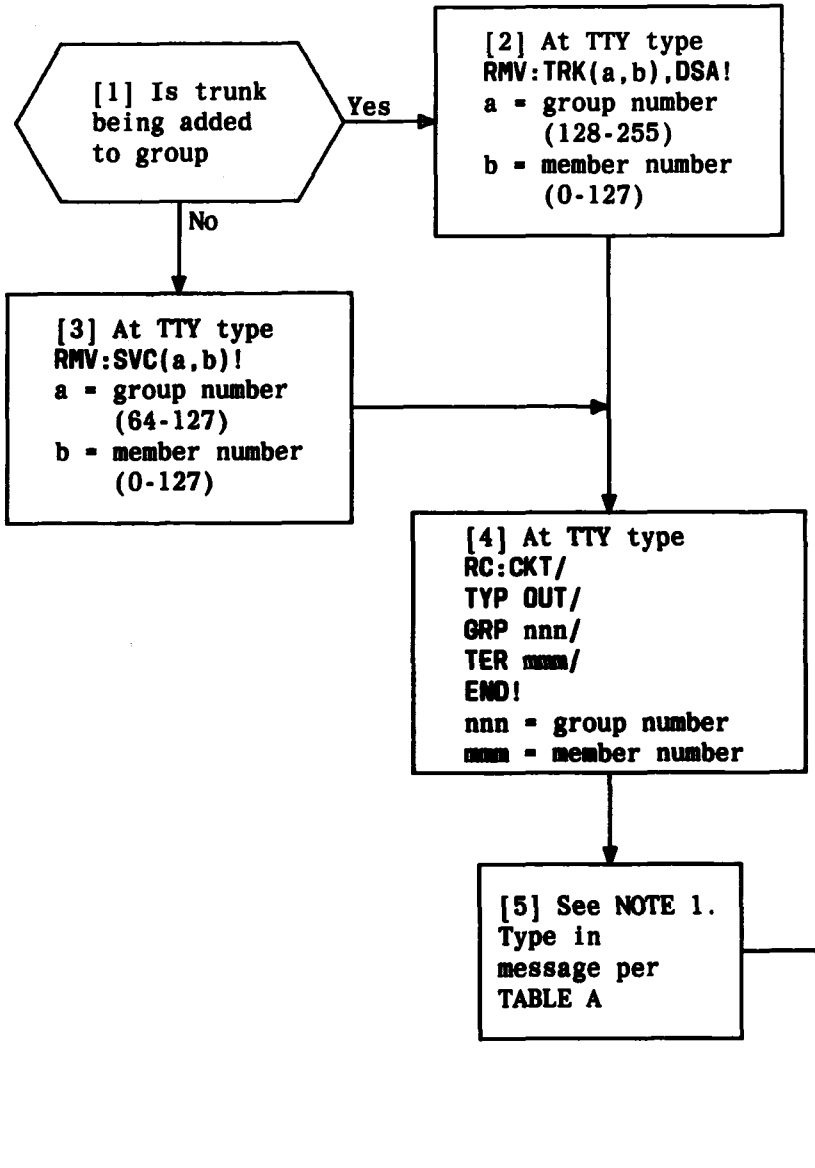

TABLE A

RC MESSAGE	VARIABLES
RC:CKT/ TYP NEW/	
GRP nnn/	nnn = Group Number
TER mmm/	mmm = Member Number
OE gg cwsi/	gg = Concentrator Group c = Concentrator w = Switch Group s = Switch i = Level on Switch
DP p ddd t/	p = Peripheral Pulse Distributor ddd = Peripheral Decoder t = Triplet
SP ss rr pp/ DSP ss rr pp/ END!	ss = Scanner Number rr = Scanner Row pp = Point in Scanner Row

NOTE 1
DSP ss rr pp/ is only used when the circuit order requires a directed scan point

ADD TRUNK OR SERVICE CIRCUIT TO GROUP

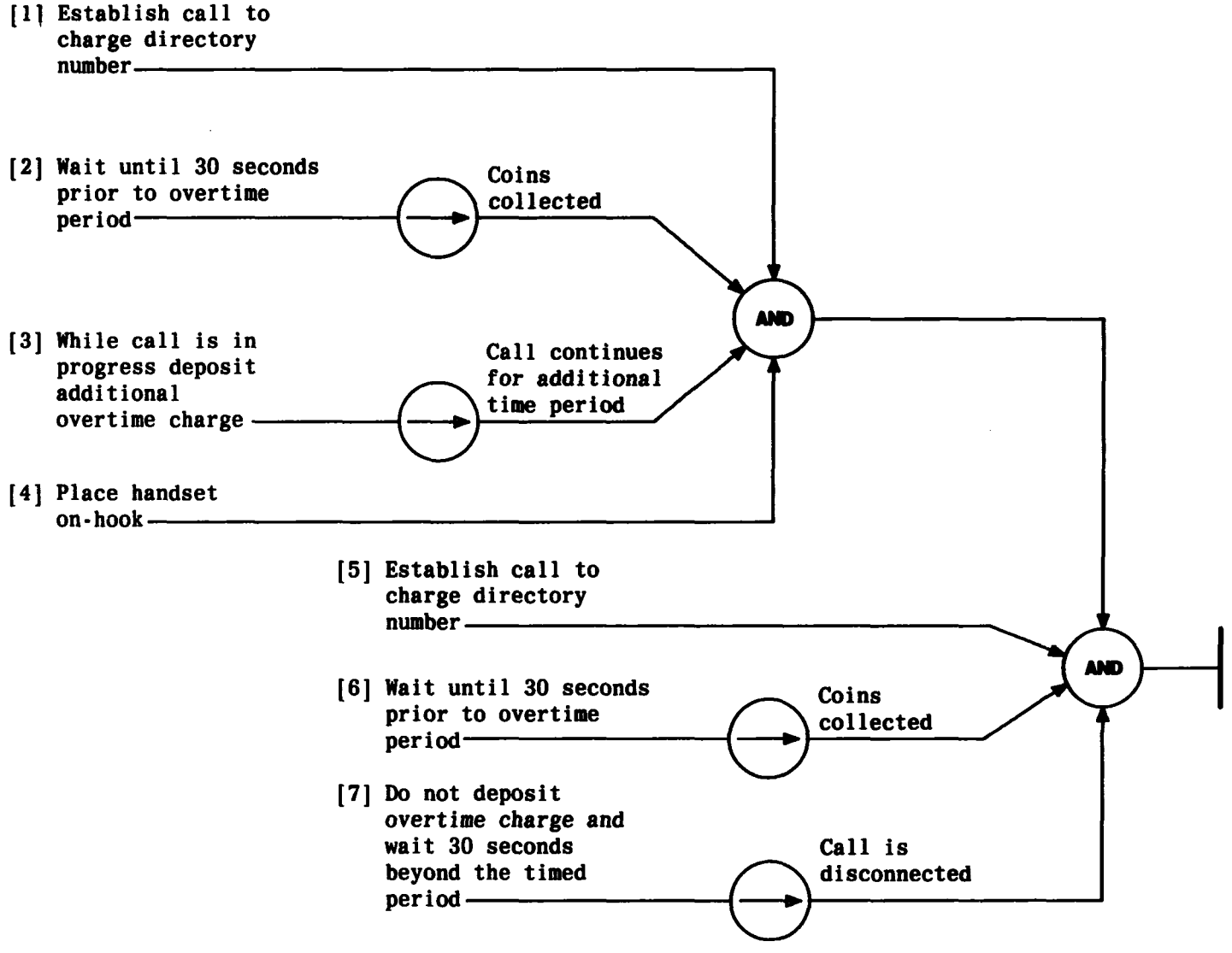

CHECK OVERTIME CHARGING FEATURE

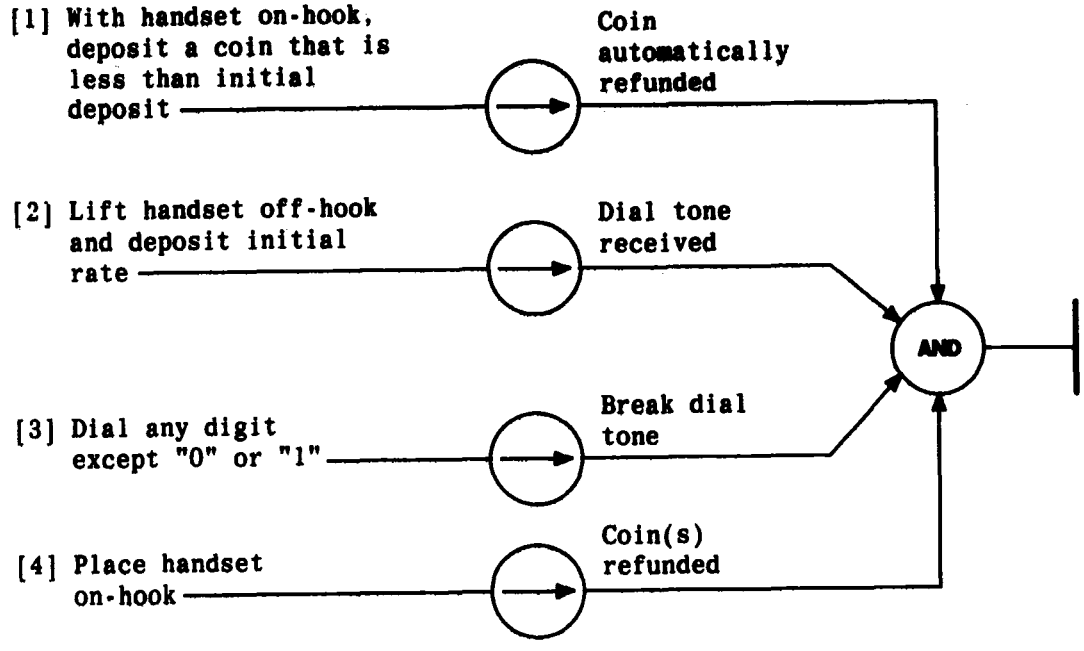

MAKE PARTIAL DIAL TEST

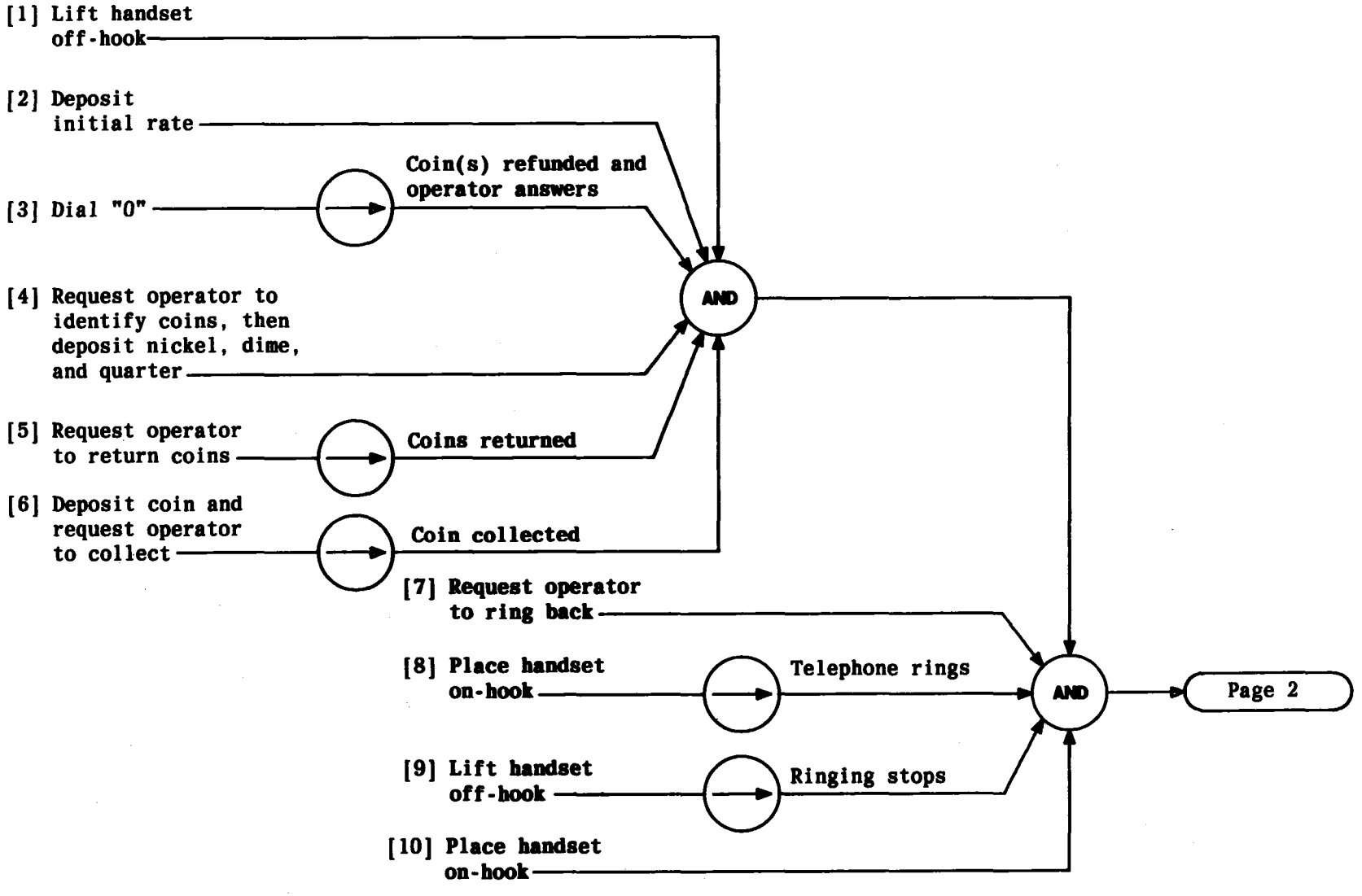

Issue 3	AUG 1984
233-142-100	DLP
PAGE 1 of 2	656

MAKE LOCAL COIN FIRST OPERATIONAL TESTS WITH OPERATOR

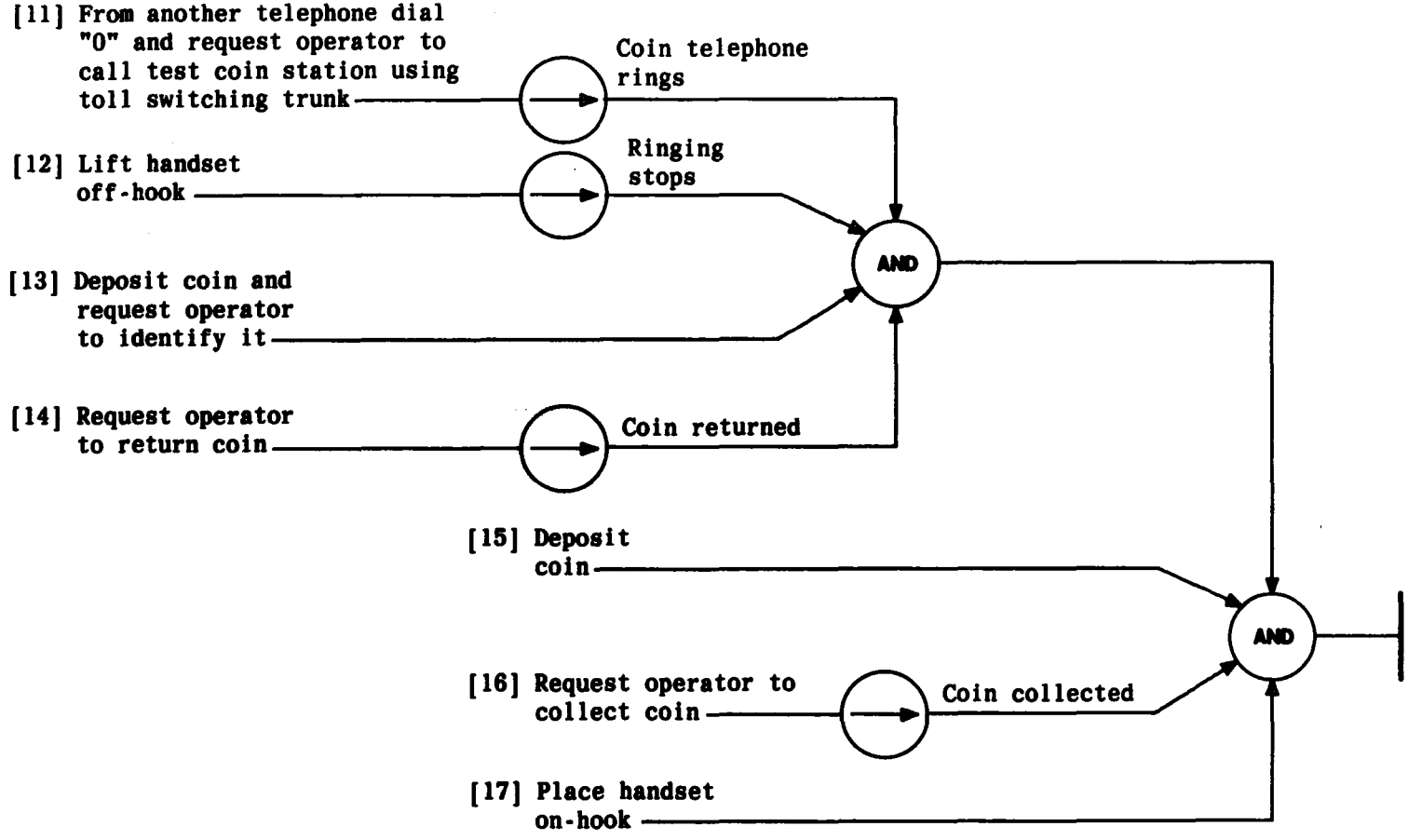

MAKE LOCAL COIN FIRST OPERATIONAL TESTS WITH OPERATOR

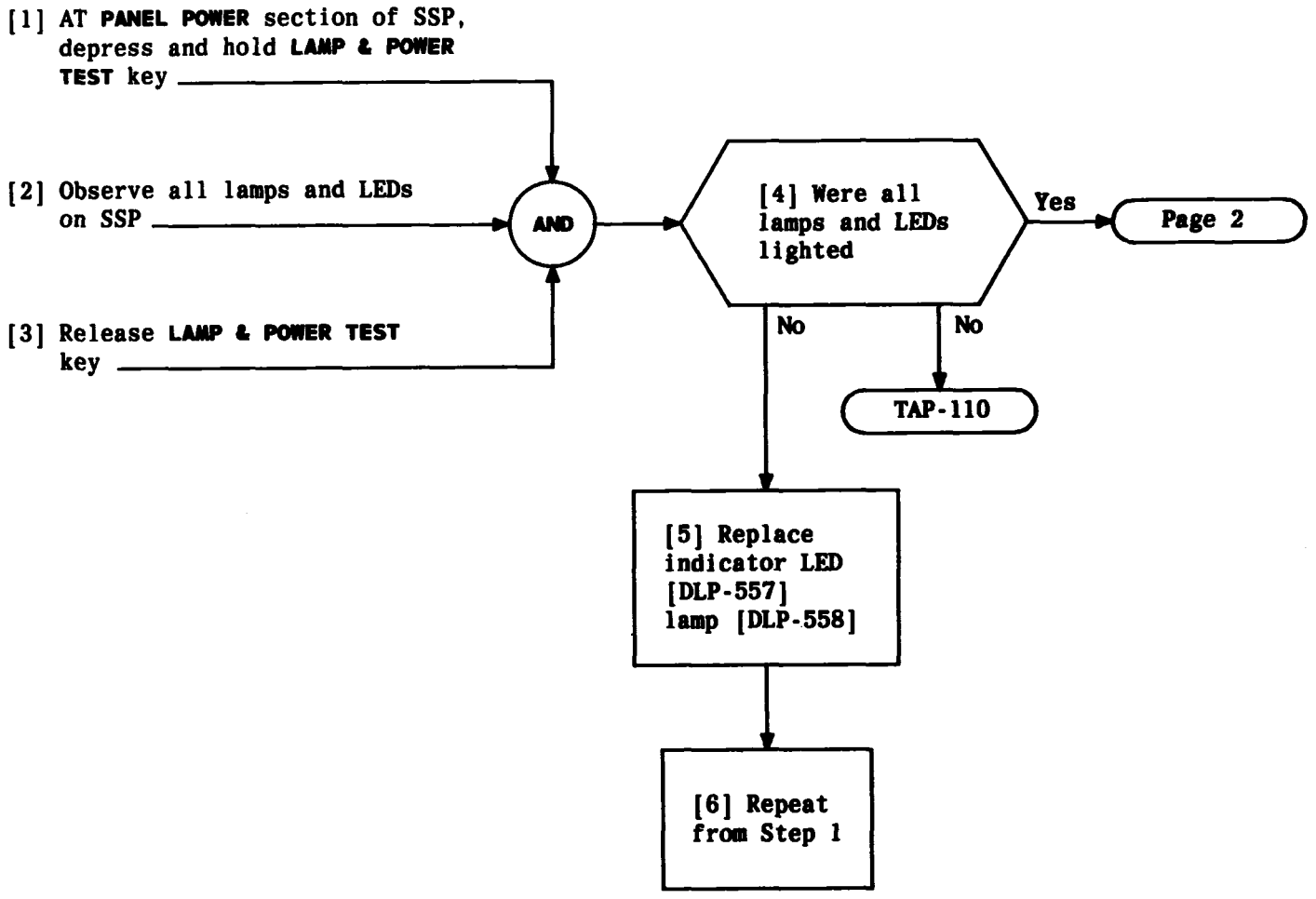

TEST LAMPS AND LEDS ON SYSTEM STATUS PANEL (SSP)

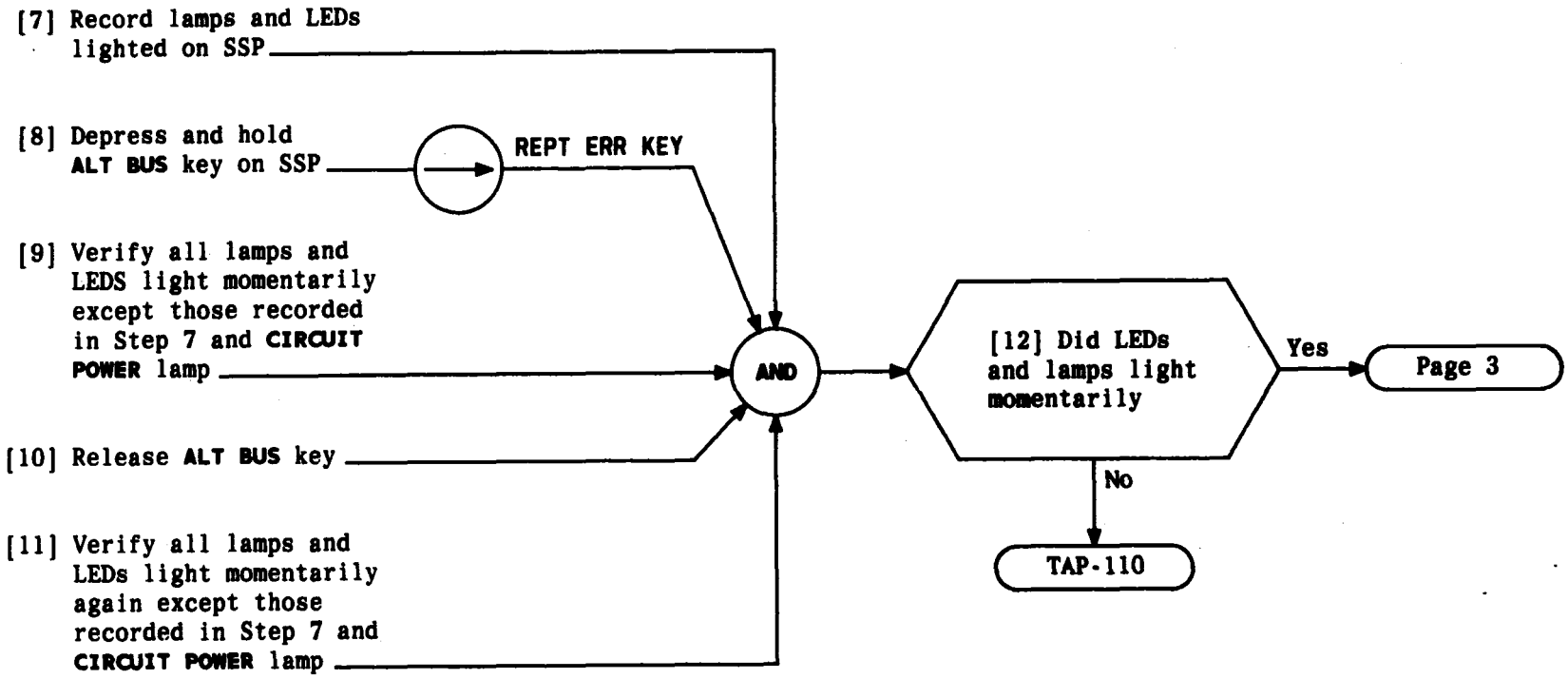

TEST LAMPS AND LEDS ON SYSTEM STATUS PANEL (SSP)

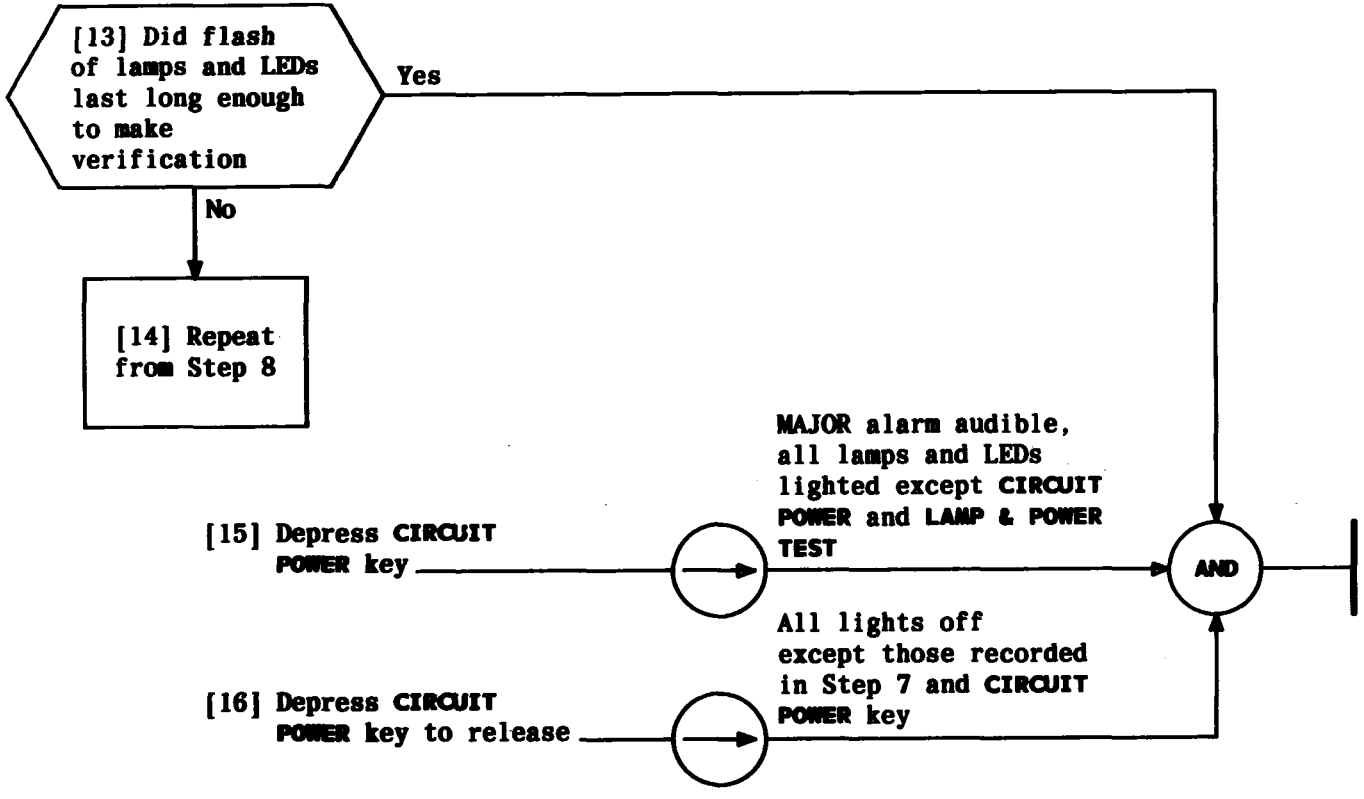

TEST LAMPS AND LEDS ON SYSTEM STATUS PANEL (SSP)

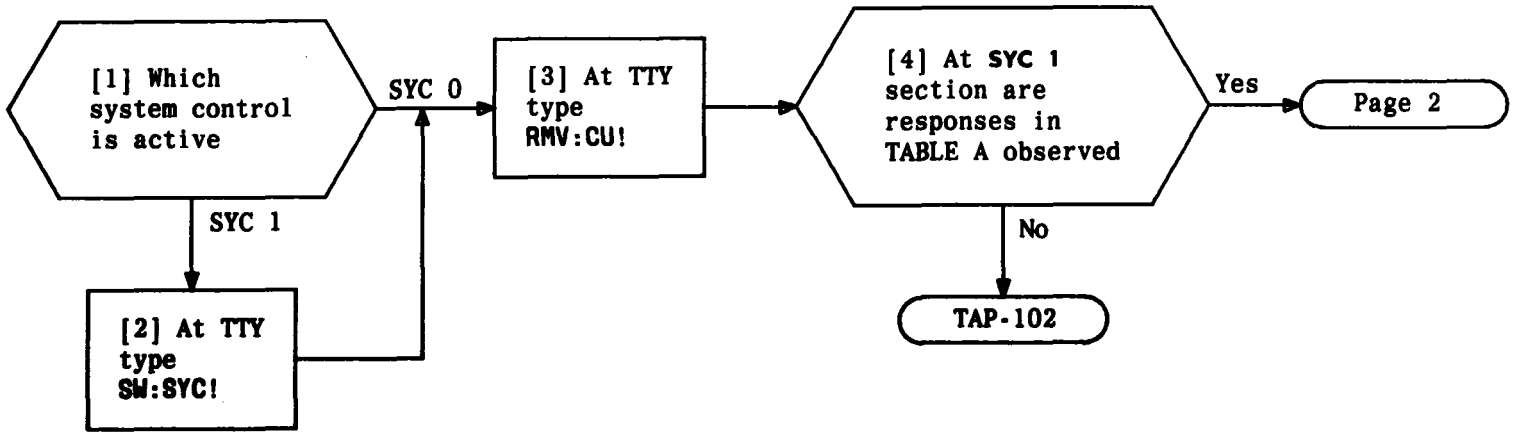

TABLE A
STANDBY LED extinguished
OUT OF SERVICE LED lighted
CU LED lighted
MAJOR EQPT LOSS lamp lighted

TEST SSP SYC 0 AND 1 STATUS INDICATORS

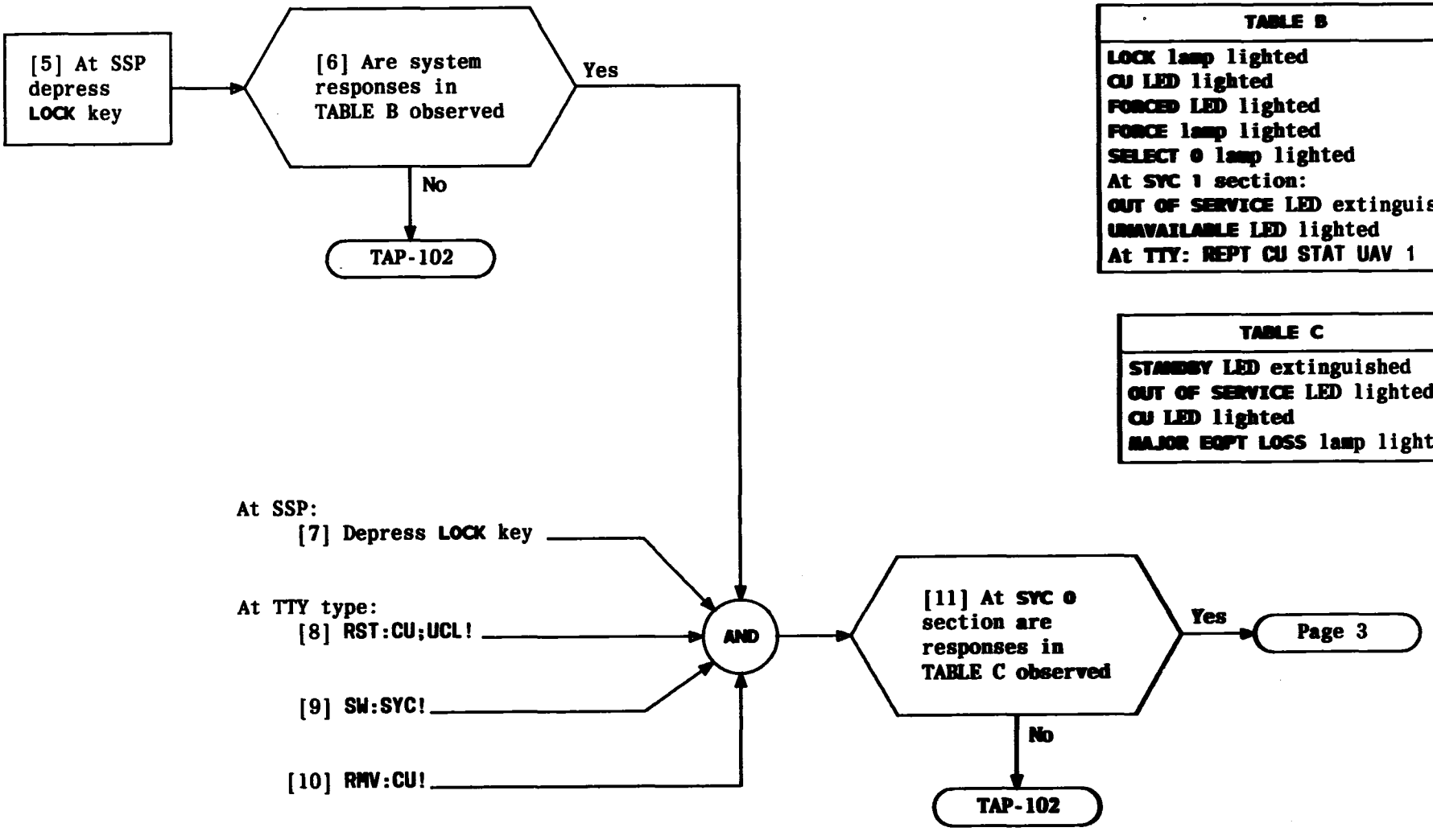

TEST SSP SYC 0 AND 1 STATUS INDICATORS

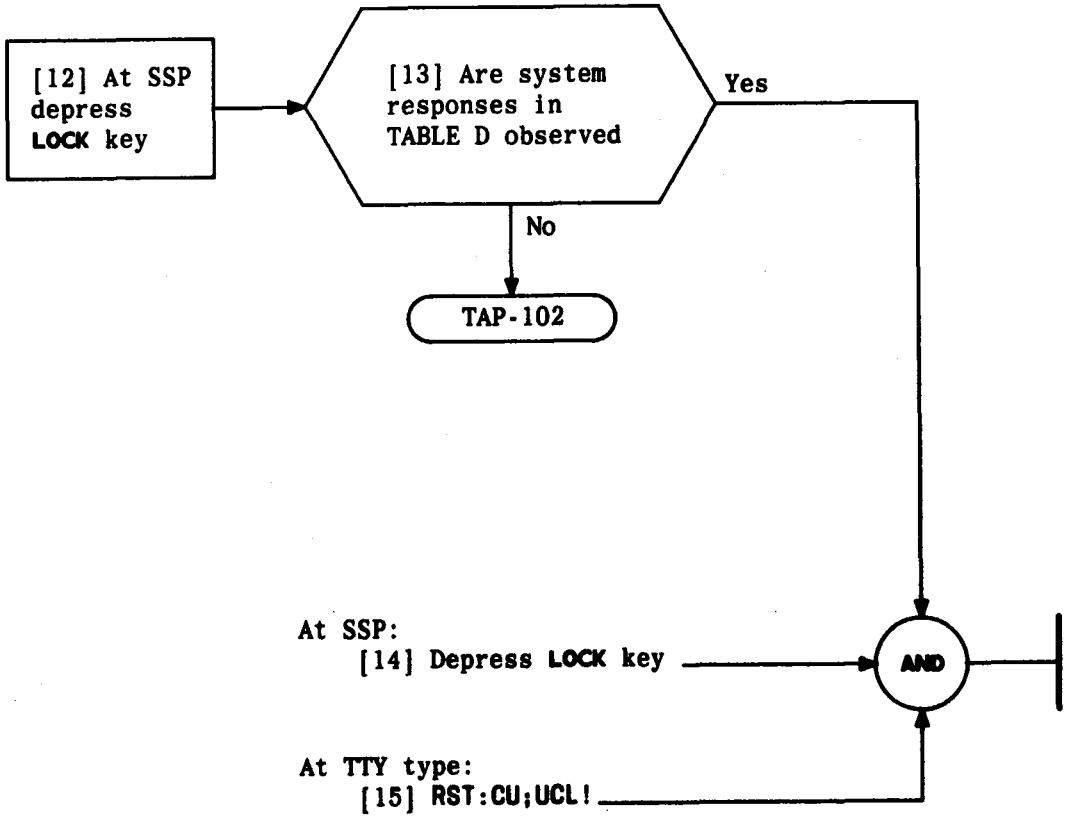

TABLE D
LOCK lamp lighted
CU LED lighted
FORCED LED lighted
FORCE lamp lighted
SELECT 1 lamp lighted
At SYC 0 section:
OUT OF SERVICE LED extinguished
UNAVAILABLE LED lighted
At TTY: REPT CU STAT UAV 0

TEST SSP SYC 0 AND 1 STATUS INDICATORS

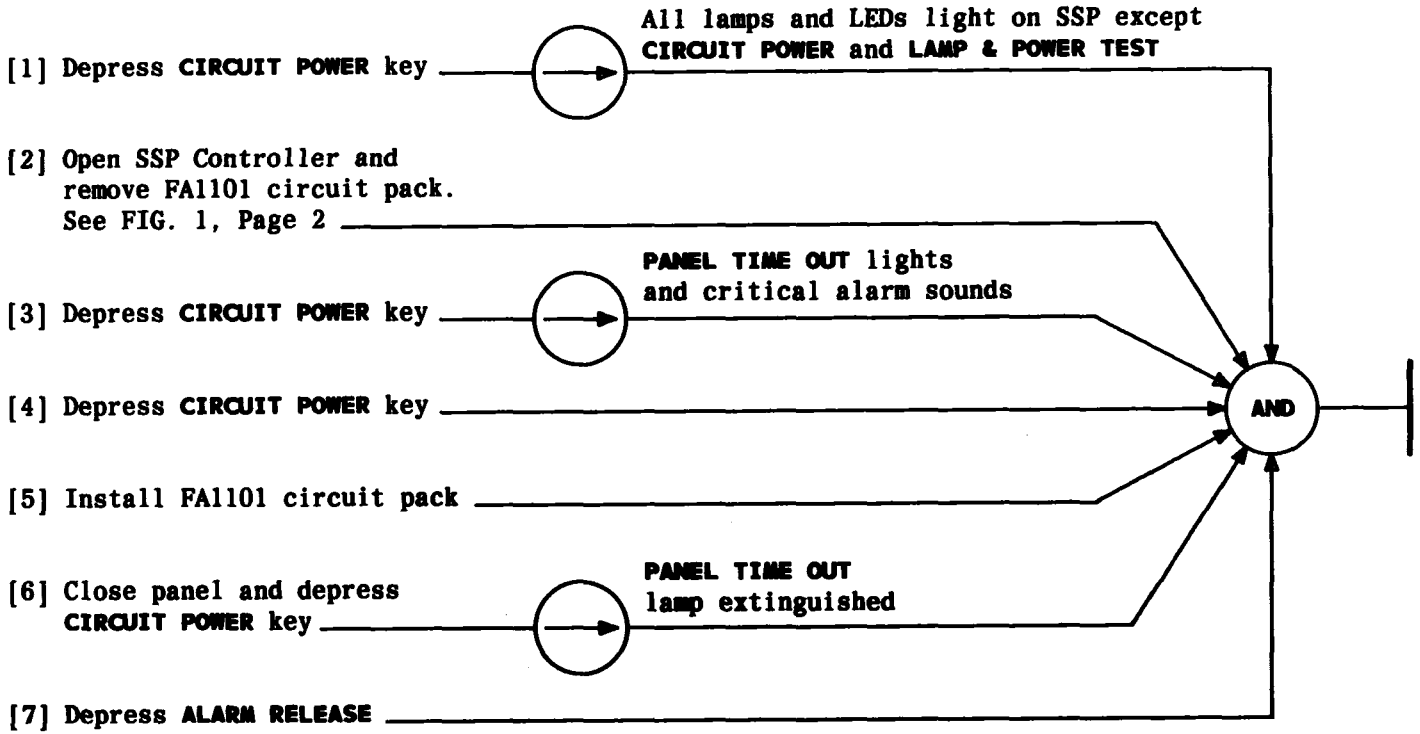

TEST SSP PANEL TIME OUT FUNCTION

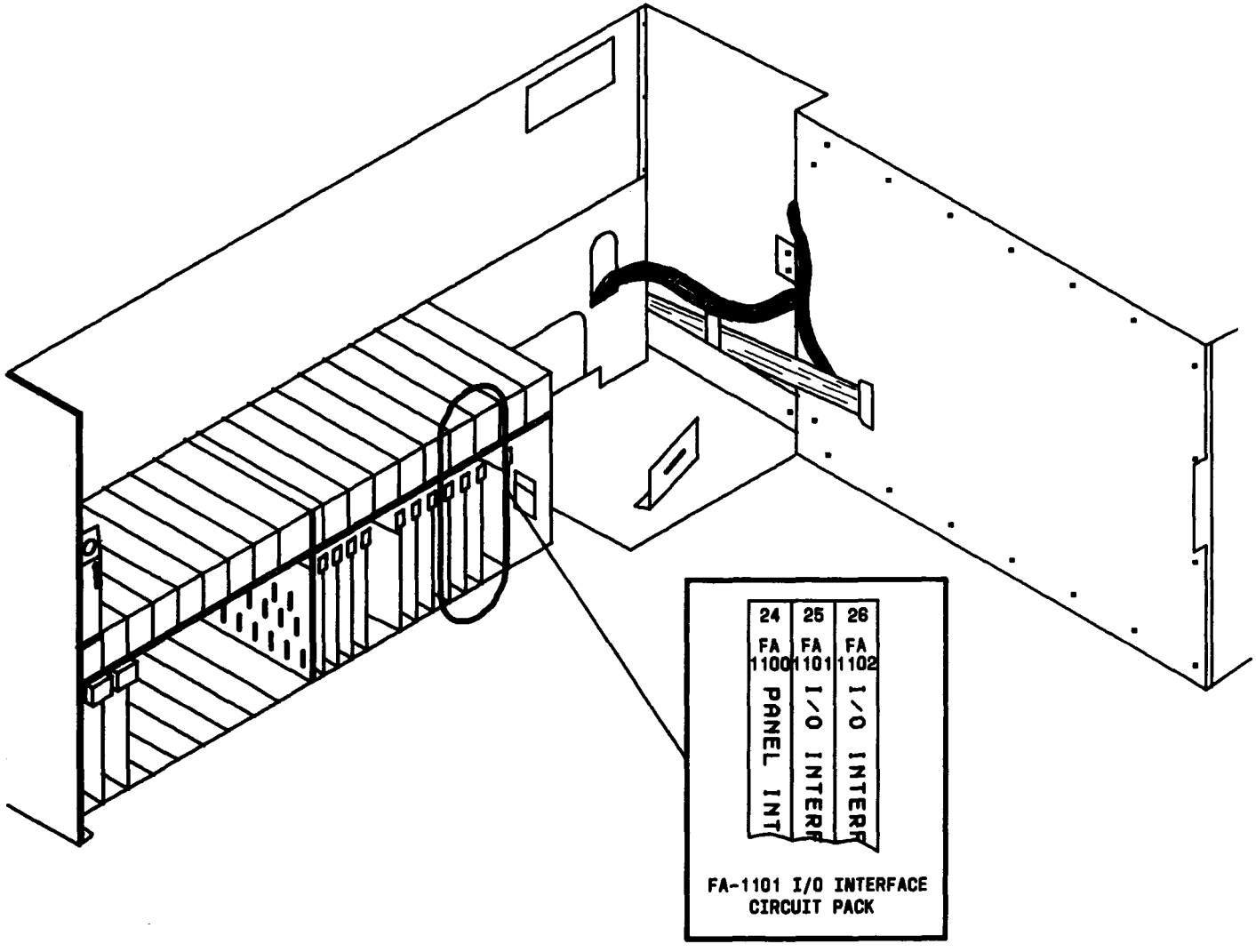

FIG. 1 – FA-1101 I/O Interface Circuit Pack

TEST SSP PANEL TIME OUT FUNCTION

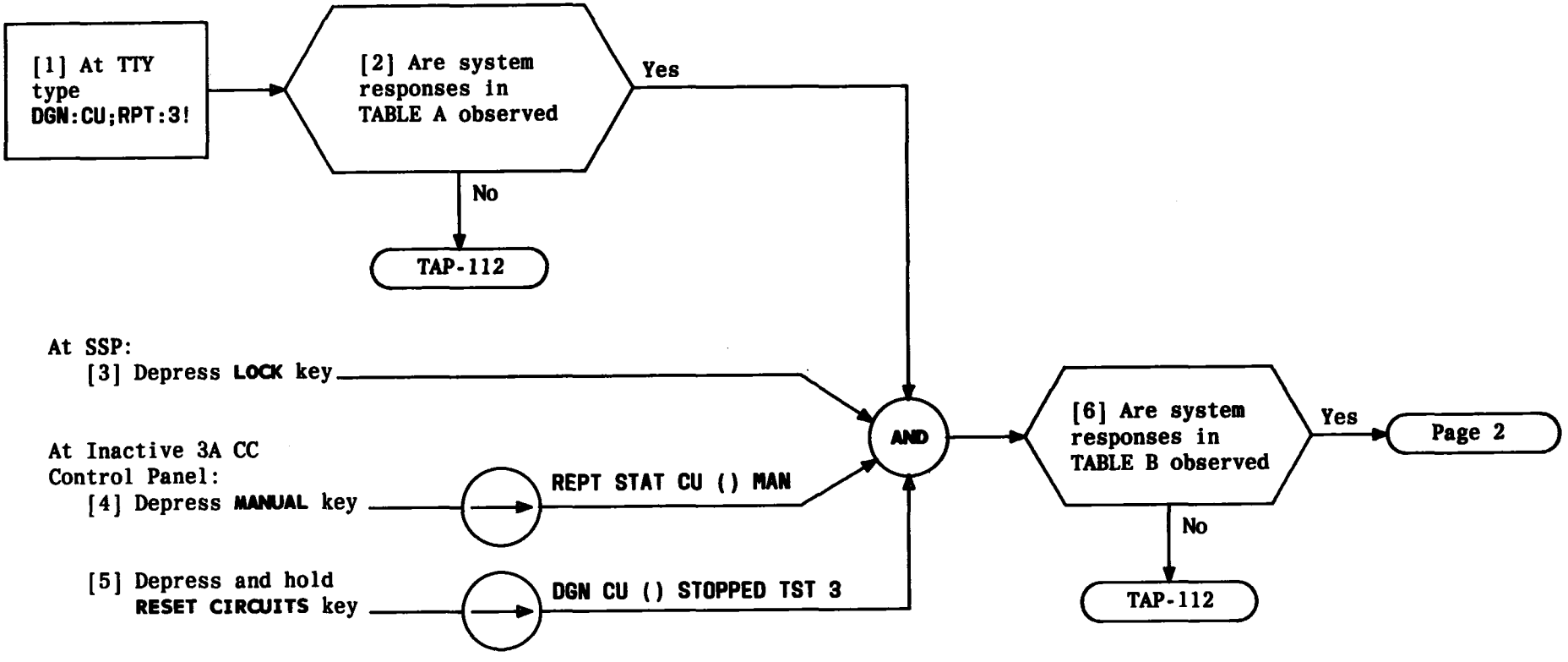

TABLE A
At SSP: PASS and EXECUTE lamps lighted MAJOR EQPT LOSS lamps lighted CU and MAJOR LEDs lighted At inactive 3A CC: ERROR STOPPED lamp flashes At TTY: DGN CU () COMPL 3

TABLE B
At SSP: PASS lamp flashes FAIL lamp lighted

TEST PASS, FAIL, AND EXECUTE LAMPS

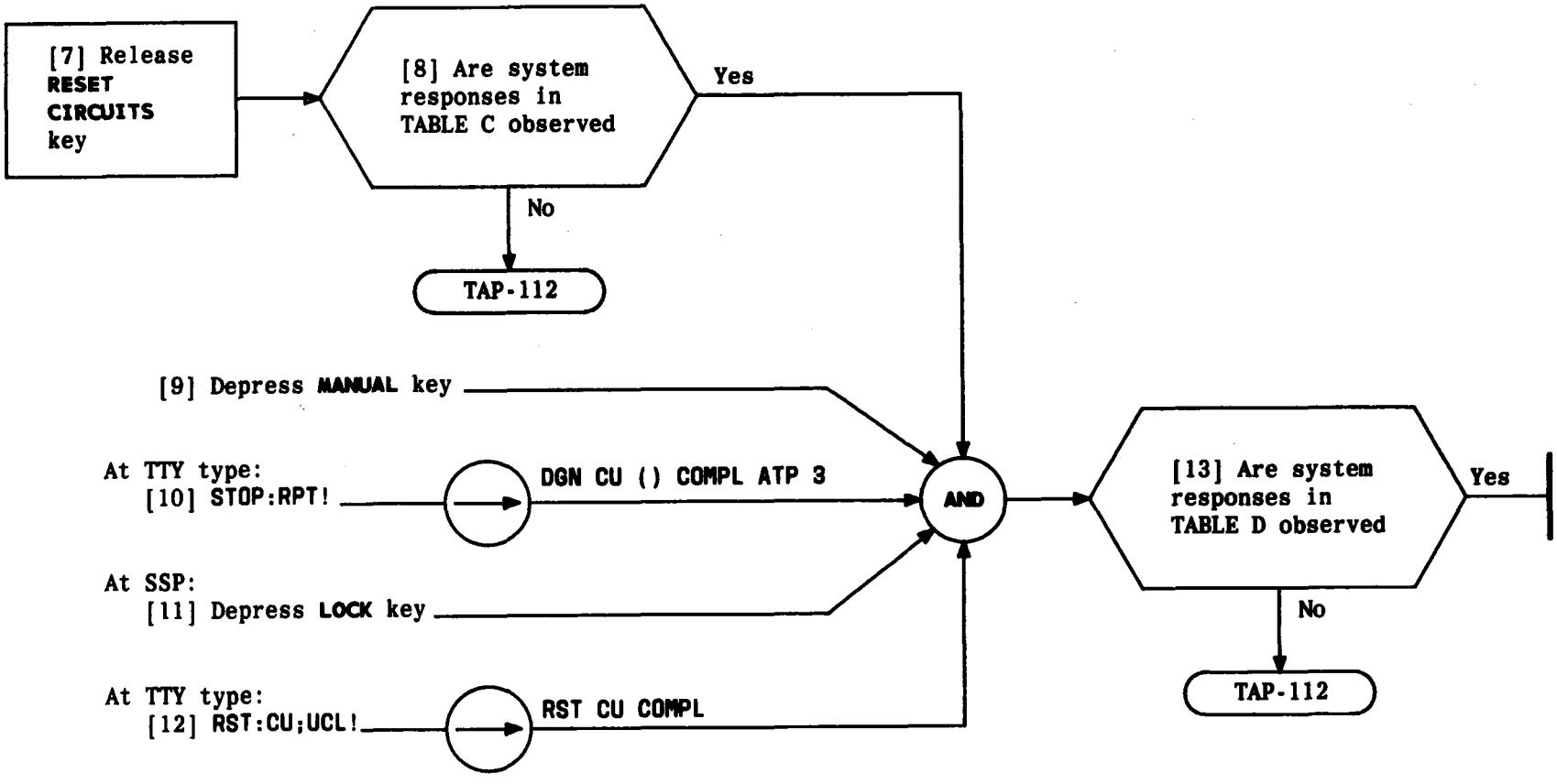

TABLE C
At SSP: **FAIL** lamp extinguished **PASS** lamp lighted

TABLE D
At SSP **PASS** lamp extinguished **EXECUTE** lamp extinguished

TEST PASS, FAIL, AND EXECUTE LAMPS

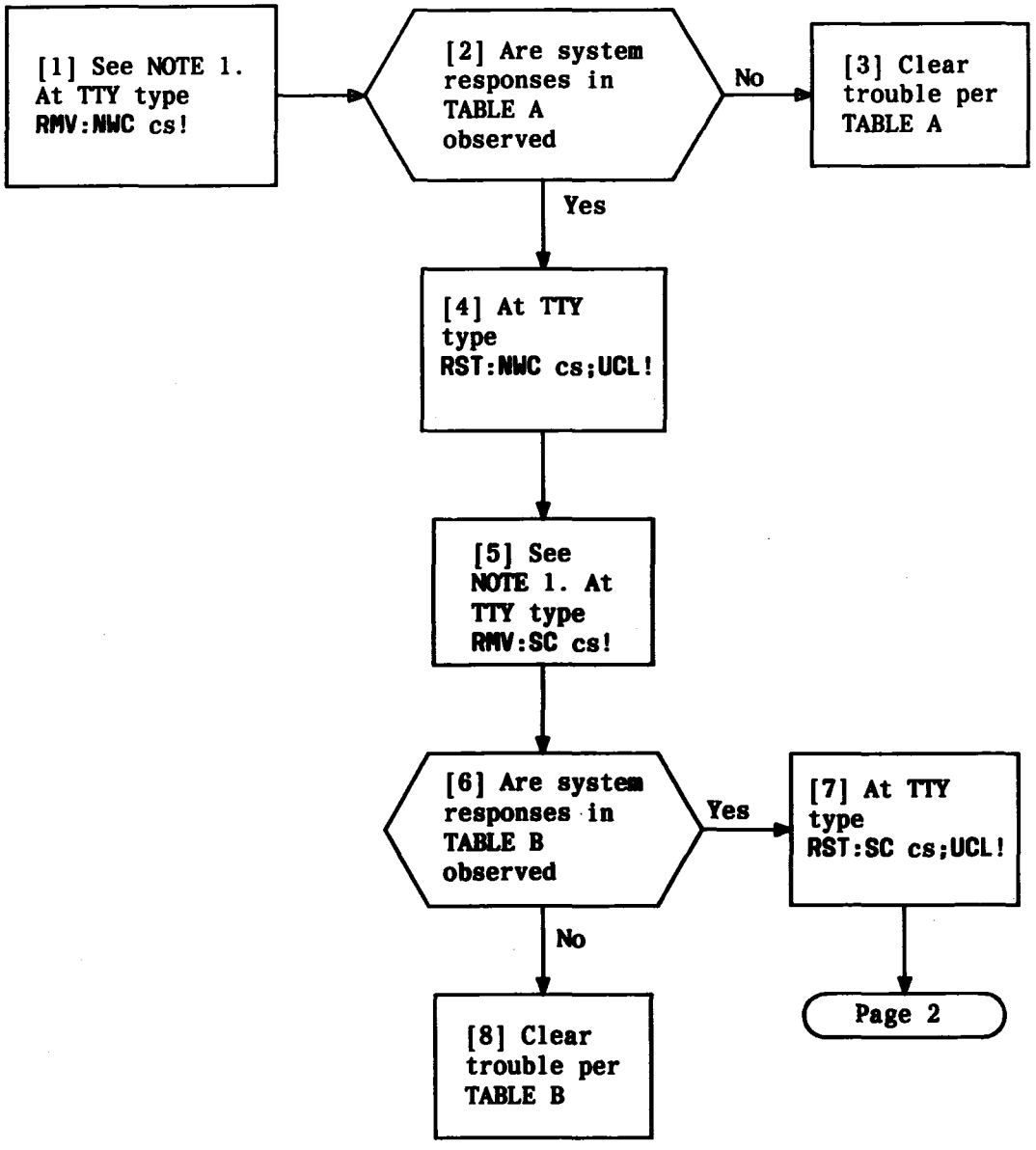

TABLE A

INDICATOR LOCATION	INDICATION TO BE OBSERVED	TROUBLE CLEARING DATA
SSP	NWC and MAJOR EQPT LOSS lighted	TAP-112
TTY	M tt RMV NWC cs ff	TAP-113

TABLE B

INDICATOR LOCATION	INDICATION TO BE OBSERVED	TROUBLE CLEARING DATA
SSP	SC and MAJOR EQPT LOSS lighted	TAP-112
TTY	M tt RMV SC cs ff	TAP-113

NOTE 1
c = Control frame unit is located on (0 or 1)
s = System control unit is located on (0 or 1)

TEST PERIPHERAL UNIT STATUS DISPLAY LEDs

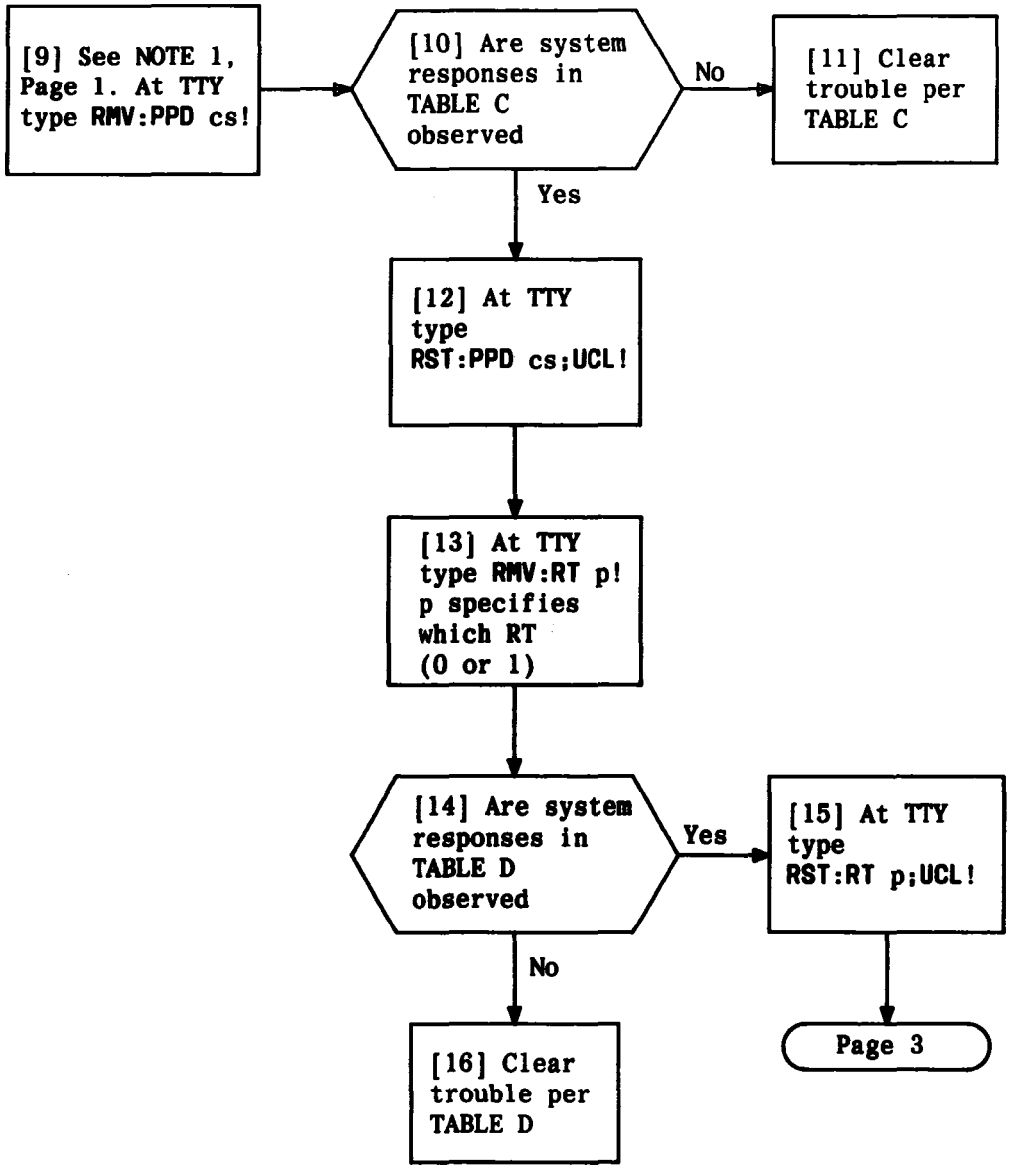

TABLE C

INDICATOR LOCATION	INDICATION TO BE OBSERVED	TROUBLE CLEARING DATA
SSP	PPD and MAJOR EQPT LOSS lighted	TAP-112
TTY	M tt RMV PPD cs ff	TAP-113

TABLE D

INDICATOR LOCATION	INDICATION TO BE OBSERVED	TROUBLE CLEARING DATA
SSP	RT and MAJOR EQPT LOSS lighted	TAP-112
TTY	M tt RMV RT p ff	TAP-113

TEST PERIPHERAL UNIT STATUS DISPLAY LEDs

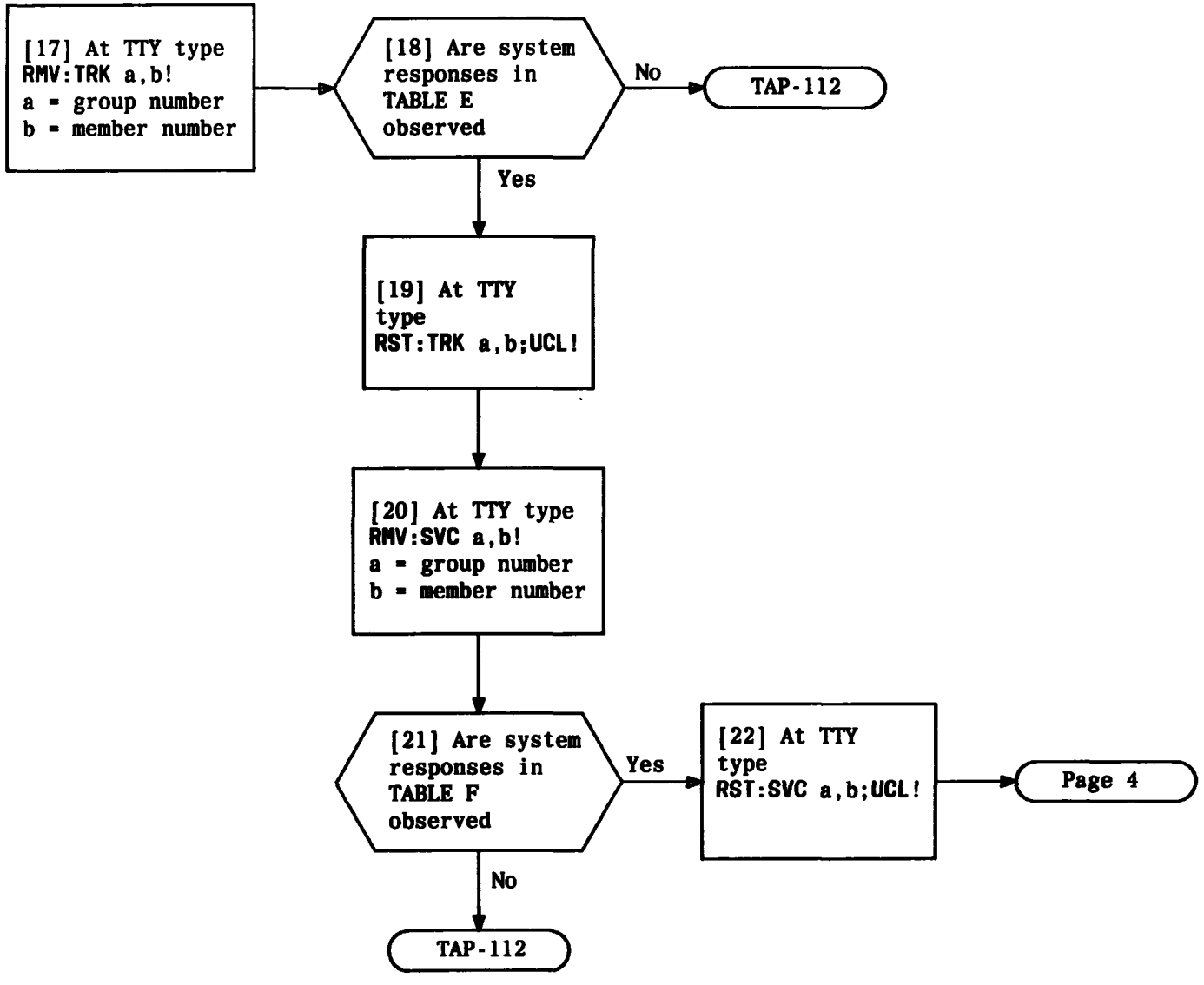

TABLE E
At SSP: **TRK LIM** LED lighted **MAJOR EQPT LOSS** lamp lighted

TABLE F
At SSP: **SVC LIM** LED lighted **MAJOR EQPT LOSS** lamp lighted

TEST PERIPHERAL UNIT STATUS DISPLAY LEDs

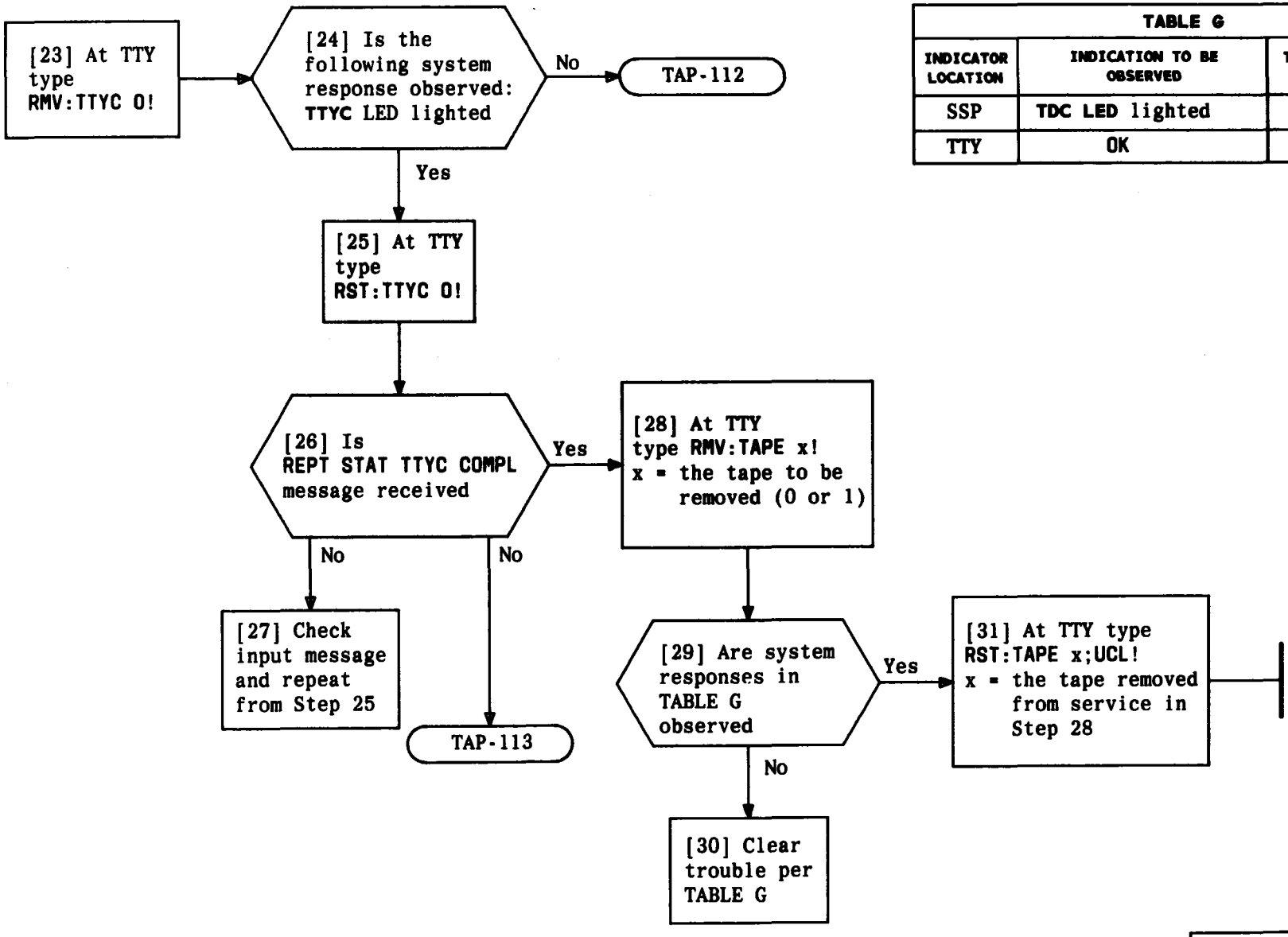

TABLE G

INDICATOR LOCATION	INDICATION TO BE OBSERVED	TROUBLE CLEARING DATA
SSP	TDC LED lighted	TAP-112
TTY	OK	TAP-113

TEST PERIPHERAL UNIT STATUS DISPLAY LEDs

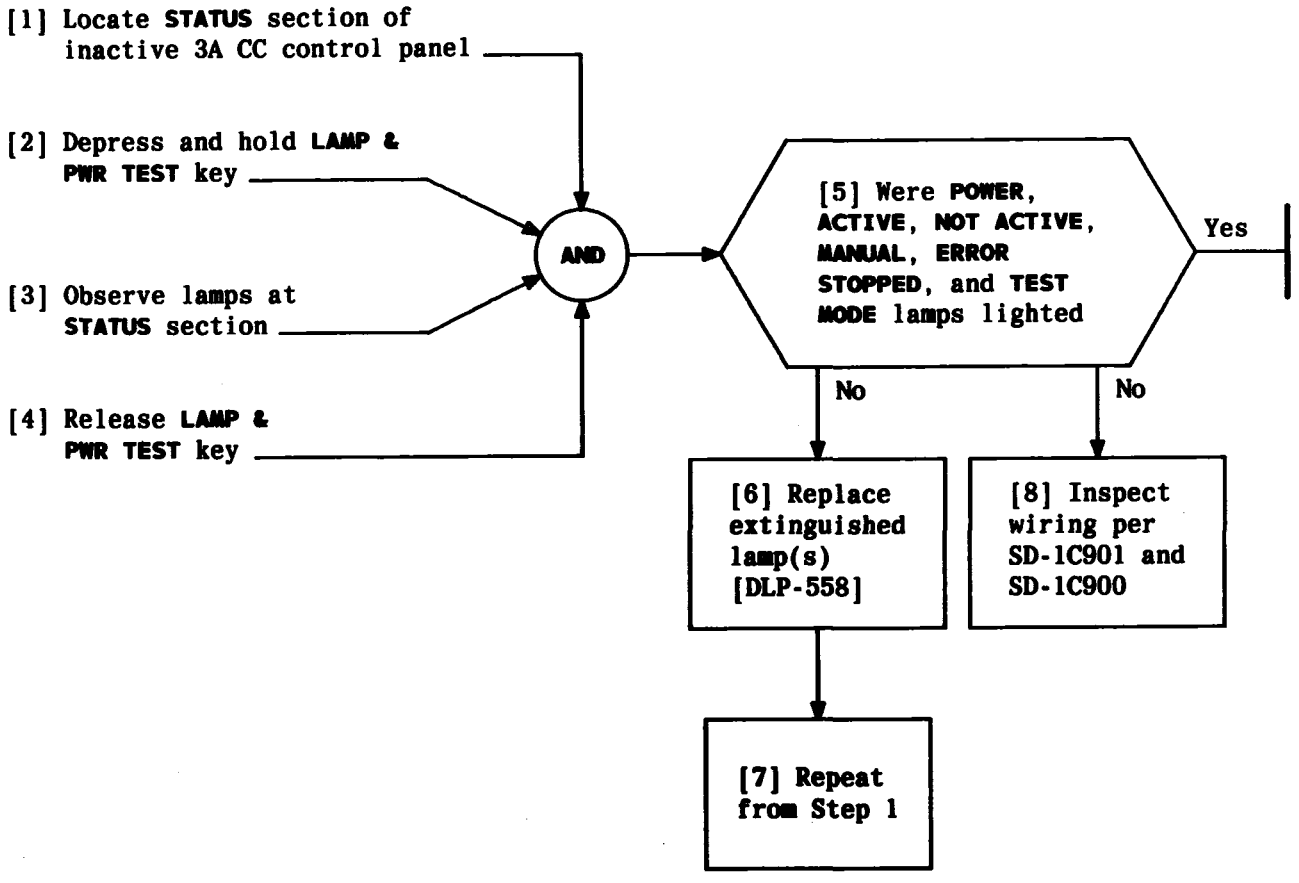

TEST LAMPS AT STATUS SECTION OF NOT ACTIVE 3A CC CONTROL UNIT

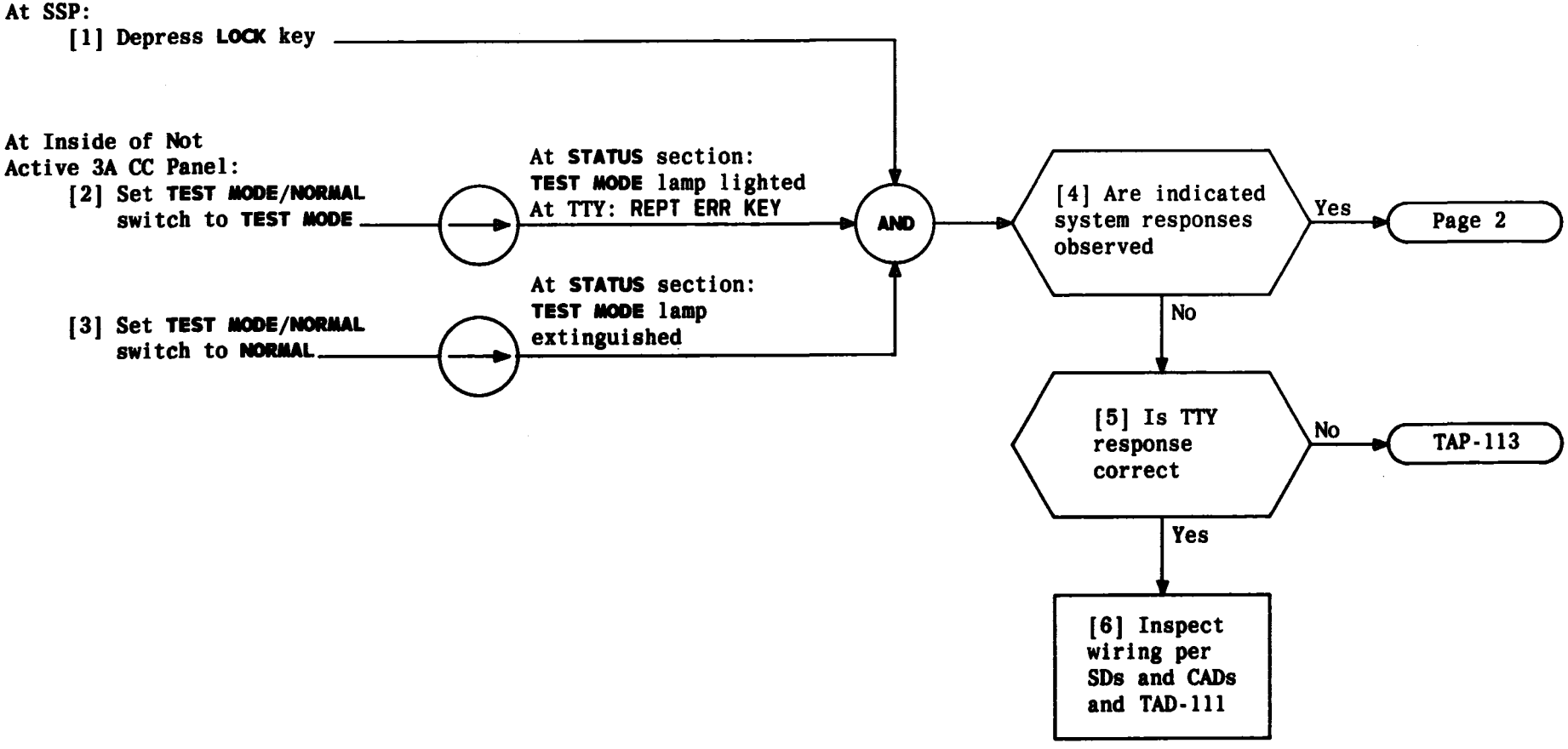

TEST 3A CC PANEL STATUS FUNCTIONS AND INDICATORS

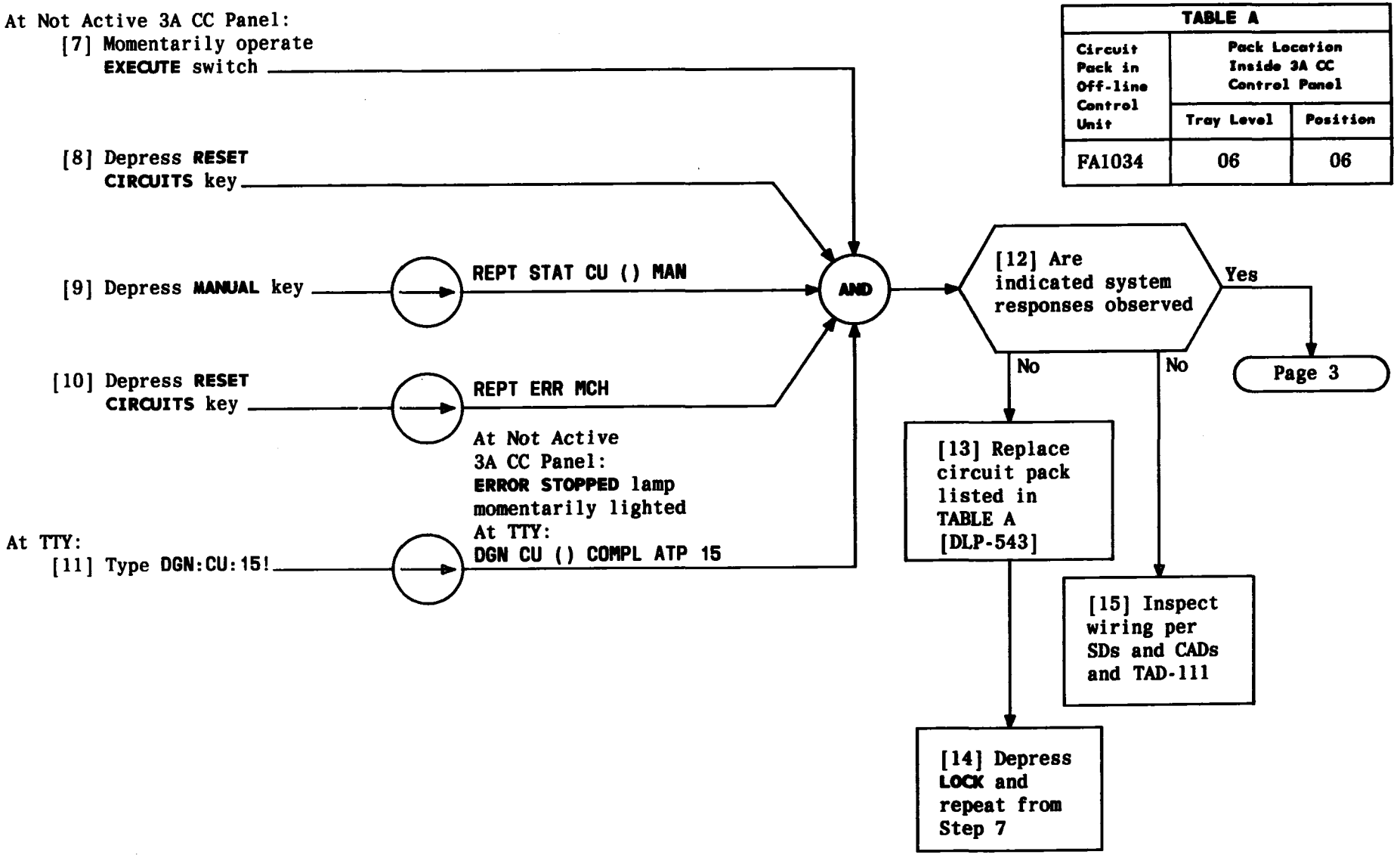

TABLE A

Circuit Pack in Off-line Control Unit	Pack Location Inside 3A CC Control Panel	
	Tray Level	Position
FA1034	06	06

TEST 3A CC PANEL STATUS FUNCTIONS AND INDICATORS

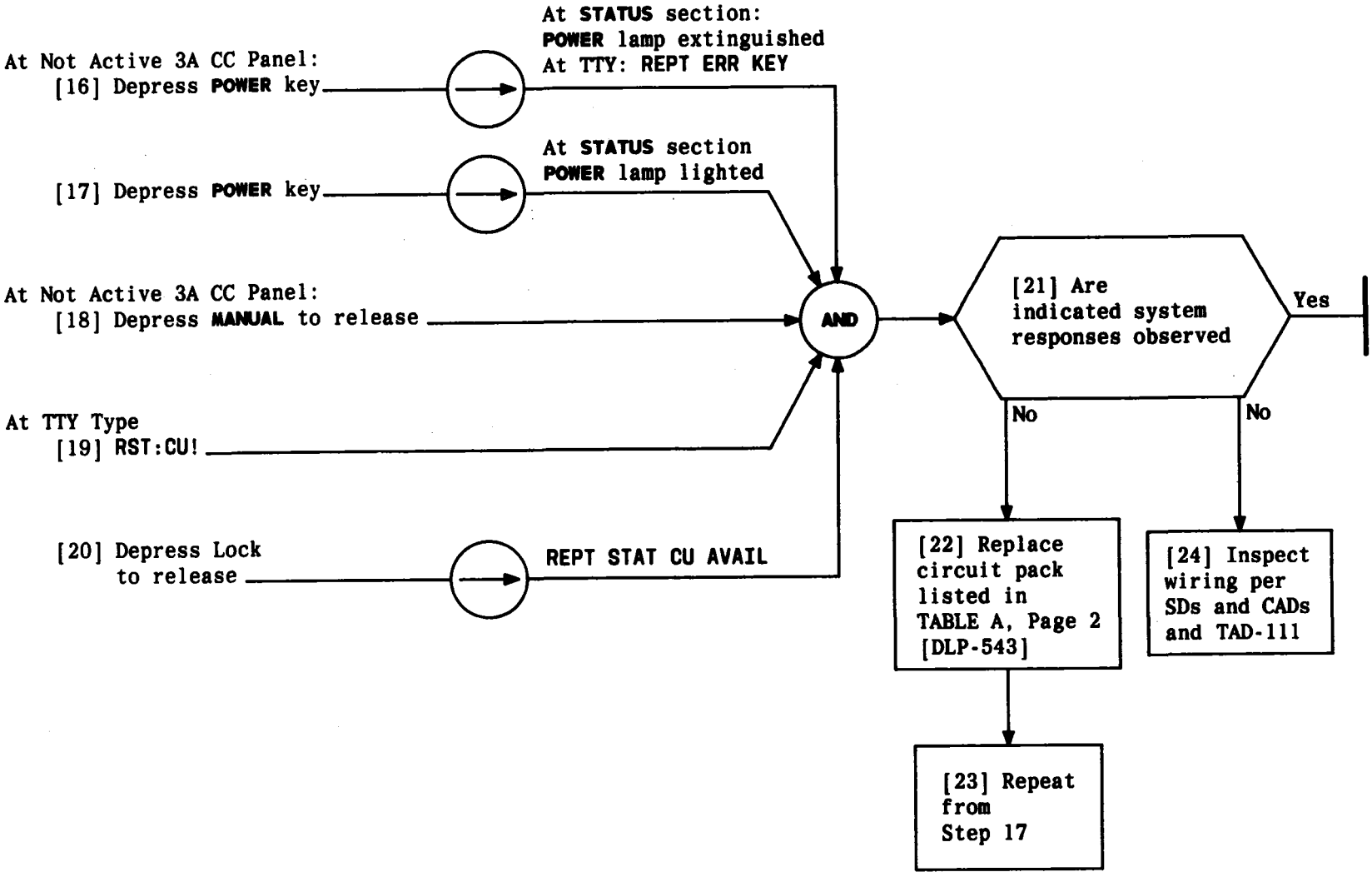

TEST 3A CC PANEL STATUS FUNCTIONS AND INDICATORS

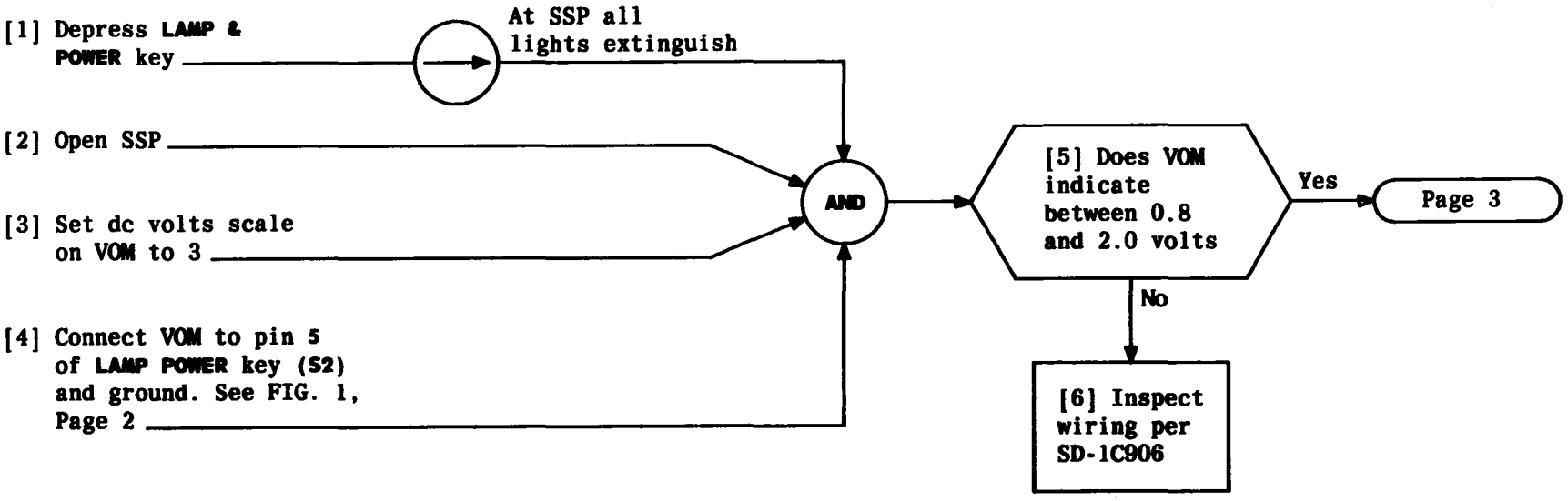

TEST SYSTEM STATUS PANEL INPUT VOLTAGES

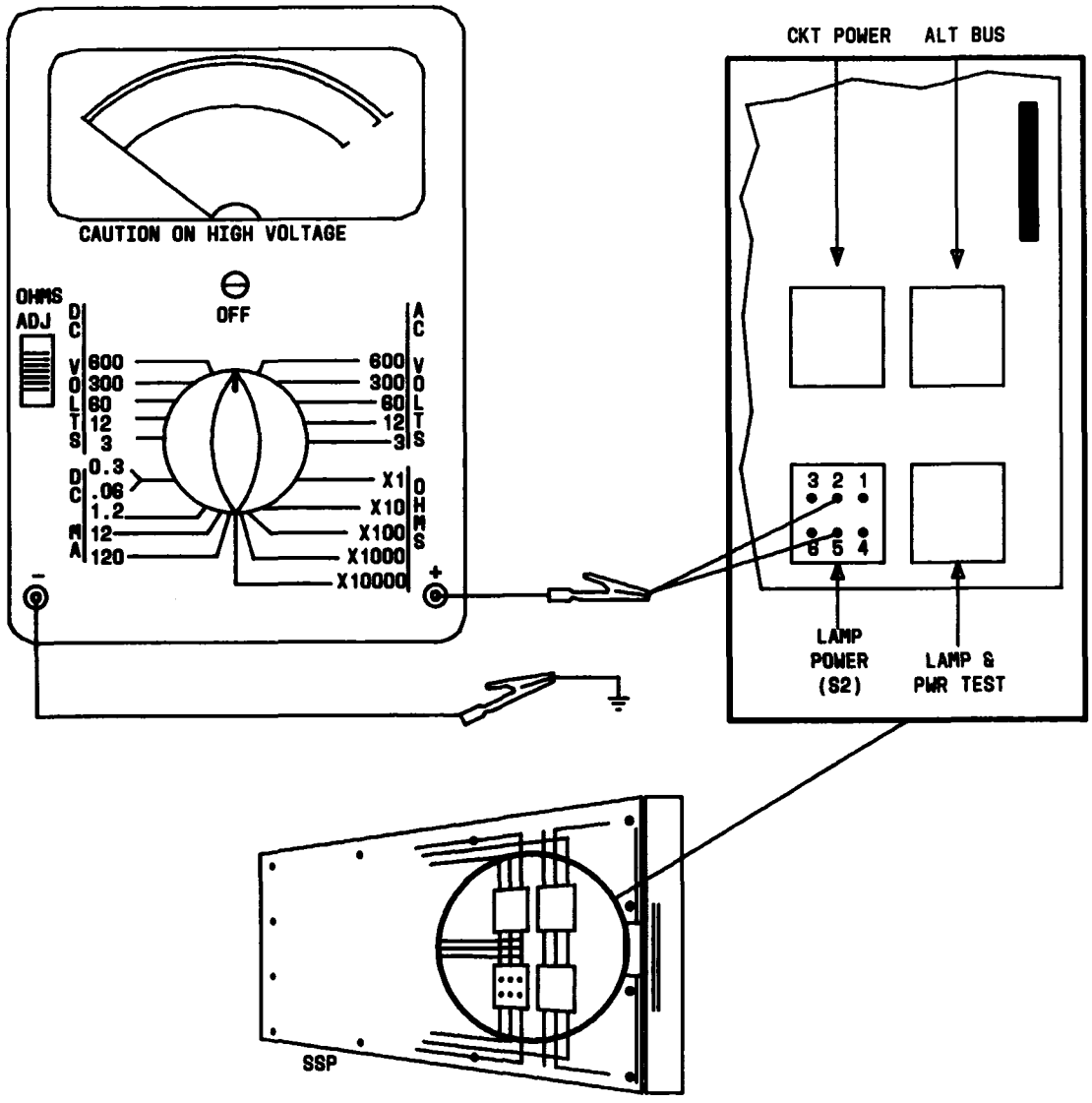

FIG. 1 – Rear View of SSP Panel Power Section with VOM Connections

TEST SYSTEM STATUS PANEL INPUT VOLTAGES

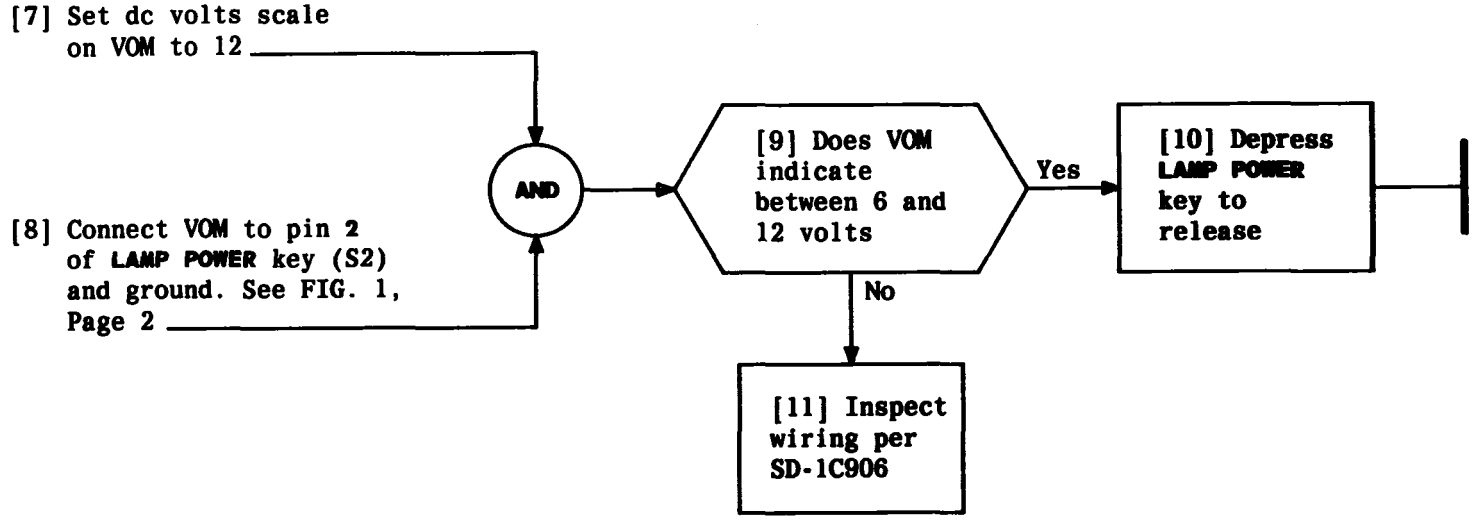

TEST SYSTEM STATUS PANEL INPUT VOLTAGES

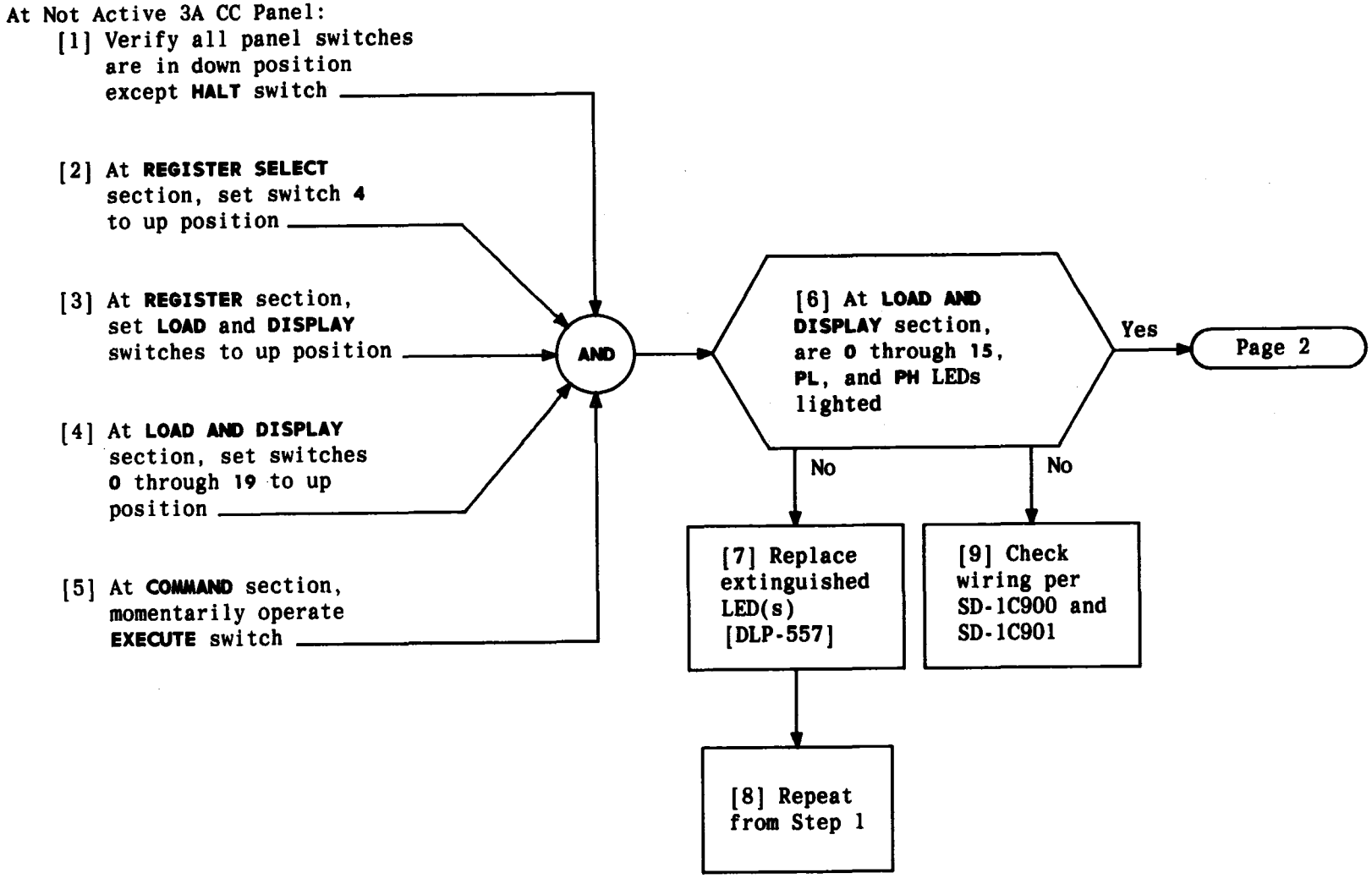

TEST LEDs AND SWITCHES AT LOAD AND DISPLAY AND REGISTER SELECT SECTIONS USING LOAD AND DISPLAY FUNCTION

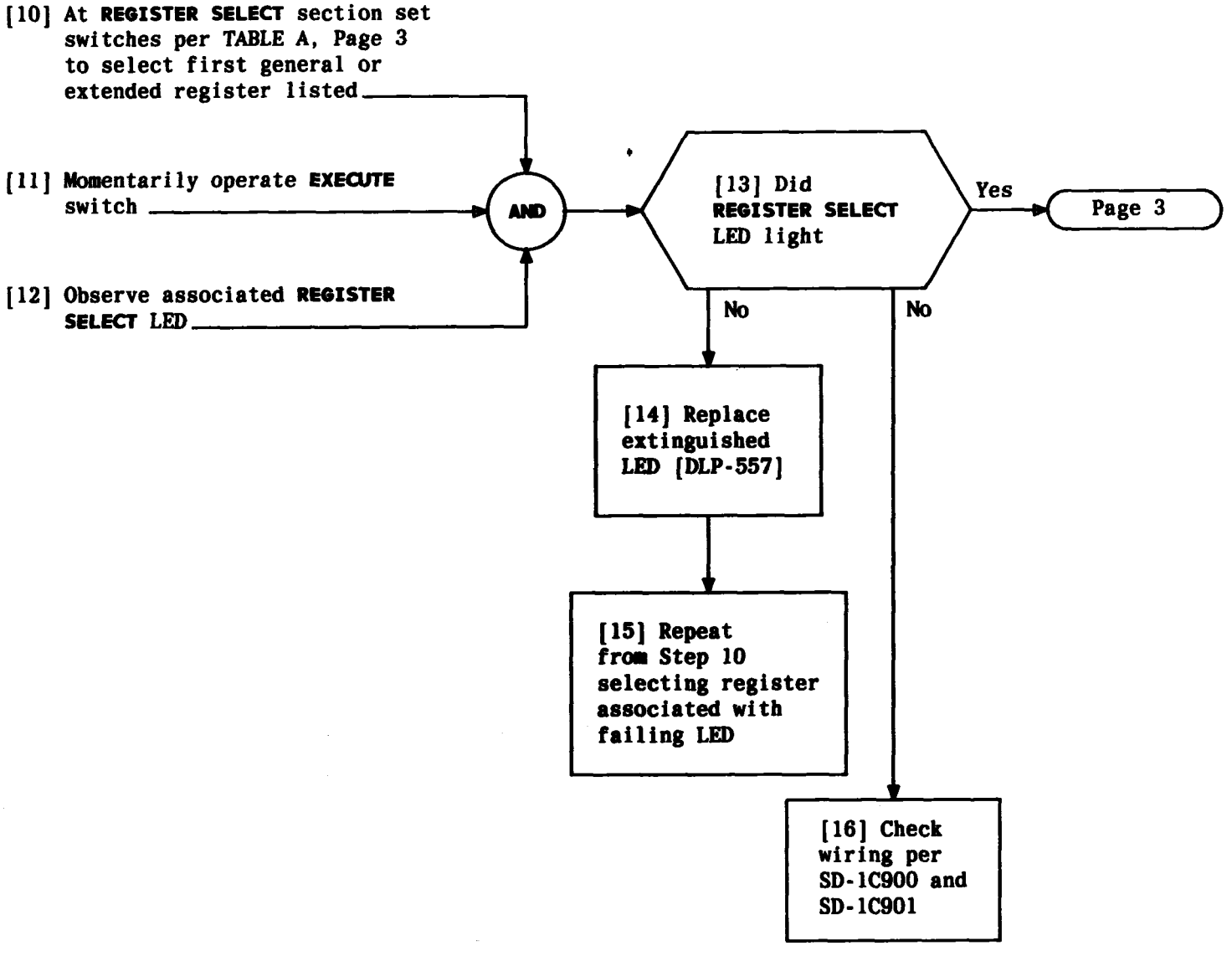

TEST LEDs AND SWITCHES AT LOAD AND DISPLAY AND REGISTER SELECT SECTIONS USING LOAD AND DISPLAY FUNCTION

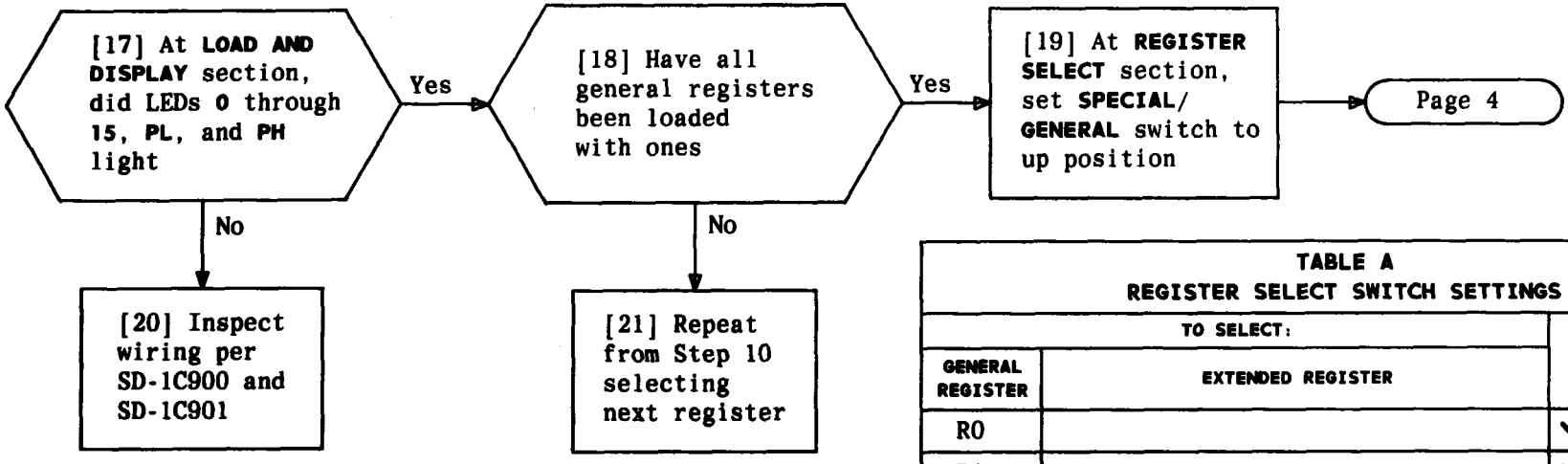

TABLE A
REGISTER SELECT SWITCH SETTINGS

TO SELECT:		SET: 8 4 2 1
GENERAL REGISTER	EXTENDED REGISTER	
R0		↓ ↓ ↓ ↓
R1		↓ ↓ ↓ ↑
R2	Logic work (LW)	↓ ↓ ↑ ↓
R3	Logic register (LR)	↓ ↓ ↑ ↑
R4	Logic ask (LM)	↓ ↑ ↓ ↓
R5	Logic function/Rotate find (LF/RF)	↓ ↑ ↓ ↑
R6	Kall record Mode counter (KM)	↓ ↑ ↑ ↓
R7	General register (GR)	↓ ↑ ↑ ↑
R8	Enable register (ER)	↑ ↓ ↓ ↓
R9	R9	↑ ↓ ↓ ↑
R10	R10	↑ ↓ ↑ ↓
R11	R11	↑ ↓ ↑ ↑
R12	Program fil middle(PFM)	↑ ↑ ↓ ↓
R13	Call address (CA)	↑ ↑ ↓ ↑
R14	Data fil high (DFH)	↑ ↑ ↑ ↓
R15	Addition address (AA)	↑ ↑ ↑ ↑

TEST LEDs AND SWITCHES AT LOAD AND DISPLAY AND REGISTER SELECT SECTIONS USING LOAD AND DISPLAY FUNCTION

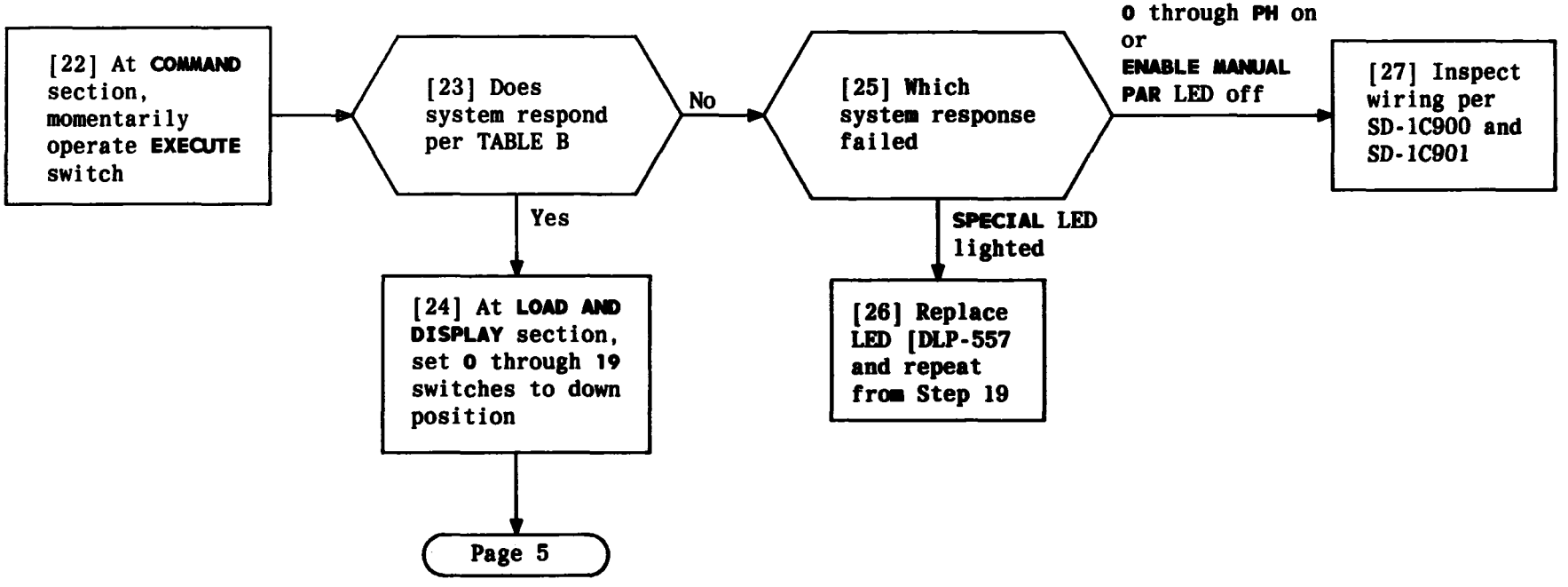

TABLE B		
ITEM	LOCATION	INDICATION/RESPONSE
1	3A CC	0 through PH LEDs ON
2	3A CC	ENABLE MANUAL PAR LED OFF
3	3A CC	SPECIAL LED Lighted

TEST LEDs AND SWITCHES AT LOAD AND DISPLAY AND REGISTER SELECT SECTIONS USING LOAD AND DISPLAY FUNCTION

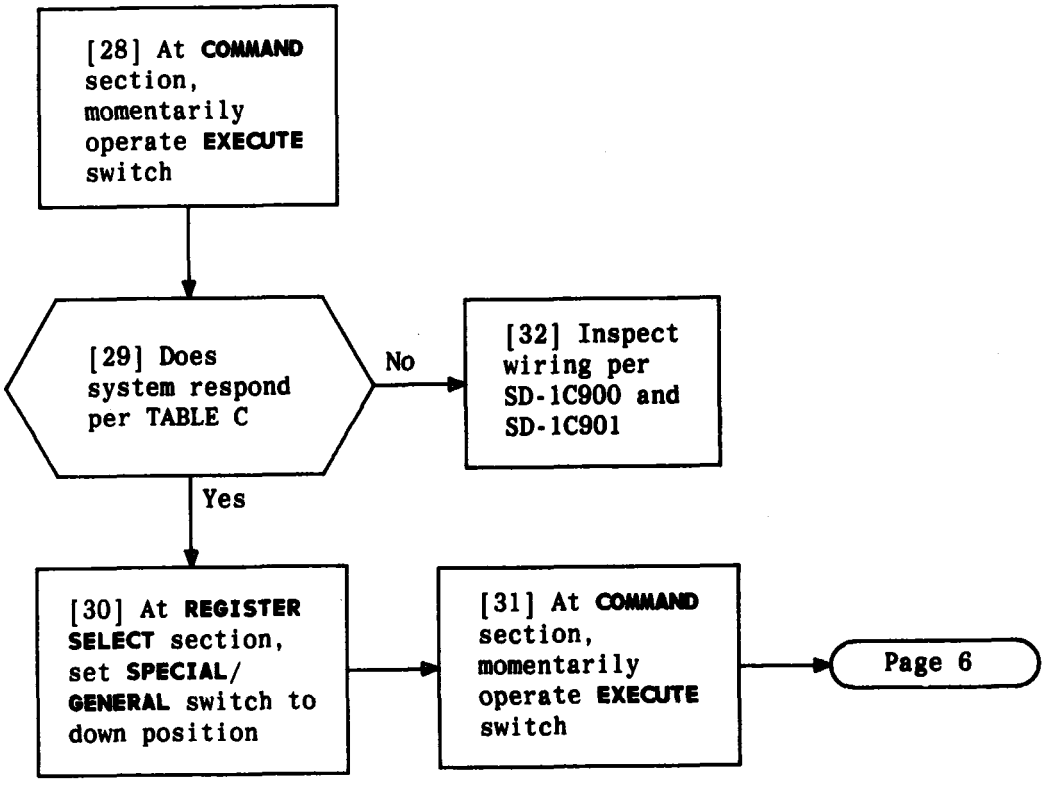

TABLE C		
ITEM	LOCATION	INDICATION/RESPONSE
1	3A CC	PL through PH LEDs on
2	3A CC	0 through 19 and ENABLE MANUAL PAR LEDs off

TEST LEDs AND SWITCHES AT LOAD AND DISPLAY AND REGISTER SELECT SECTIONS USING LOAD AND DISPLAY FUNCTION

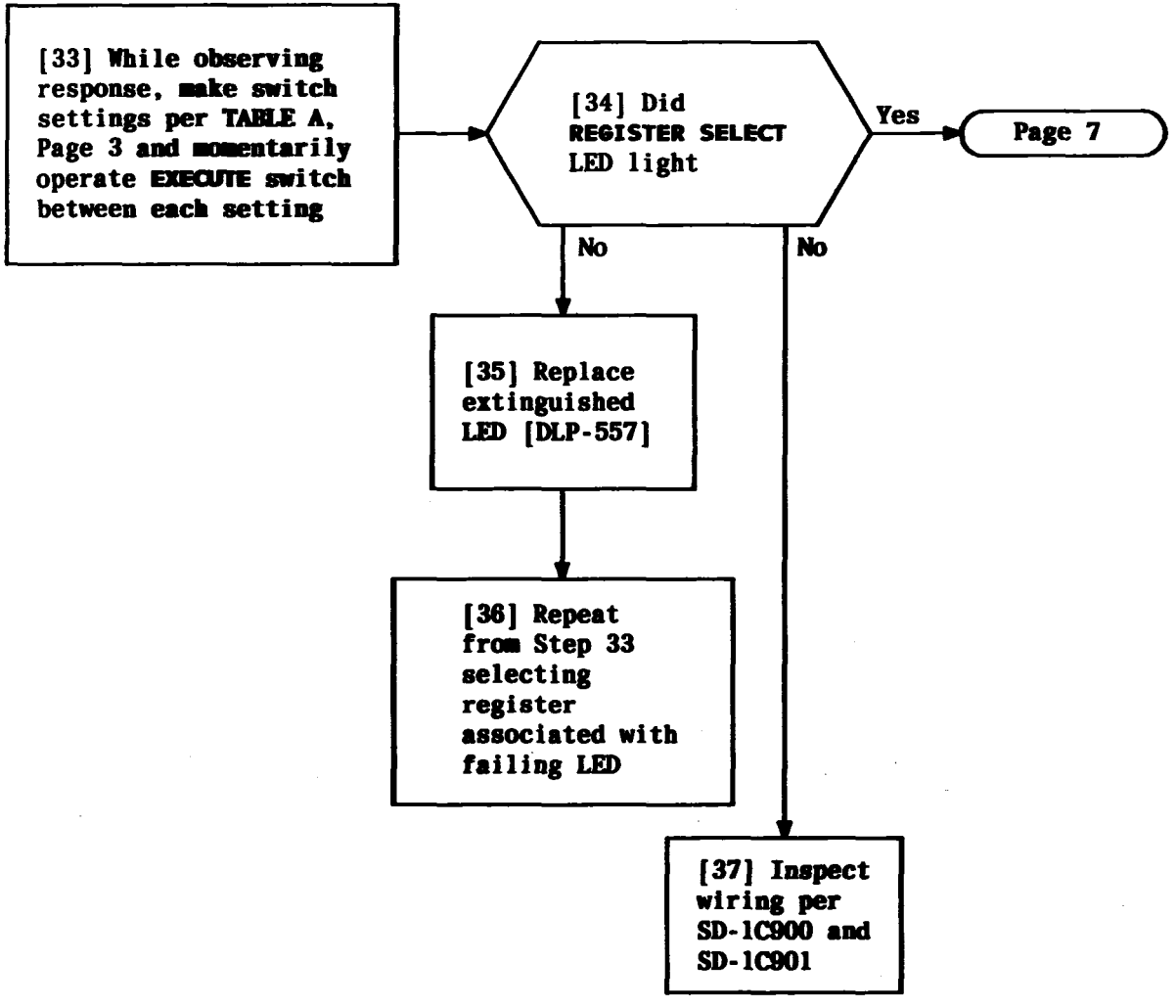

TEST LEDs AND SWITCHES AT LOAD AND DISPLAY AND REGISTER SELECT SECTIONS USING LOAD AND DISPLAY FUNCTION

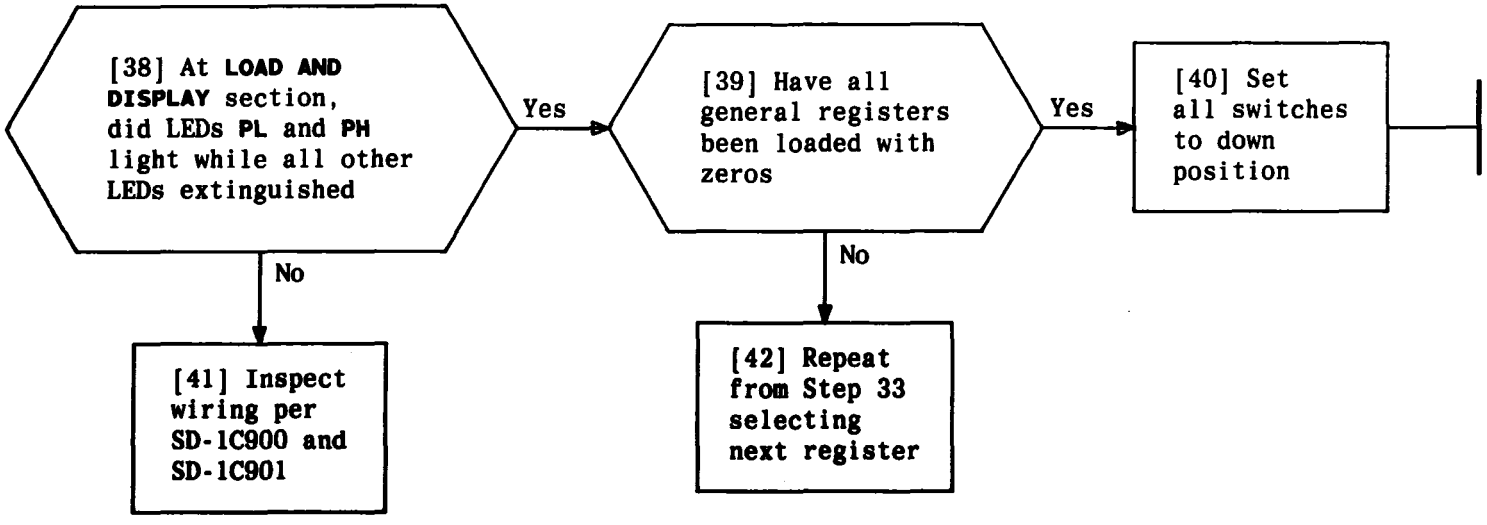

TEST LEDs AND SWITCHES AT LOAD AND DISPLAY AND REGISTER SELECT SECTIONS USING LOAD AND DISPLAY FUNCTION

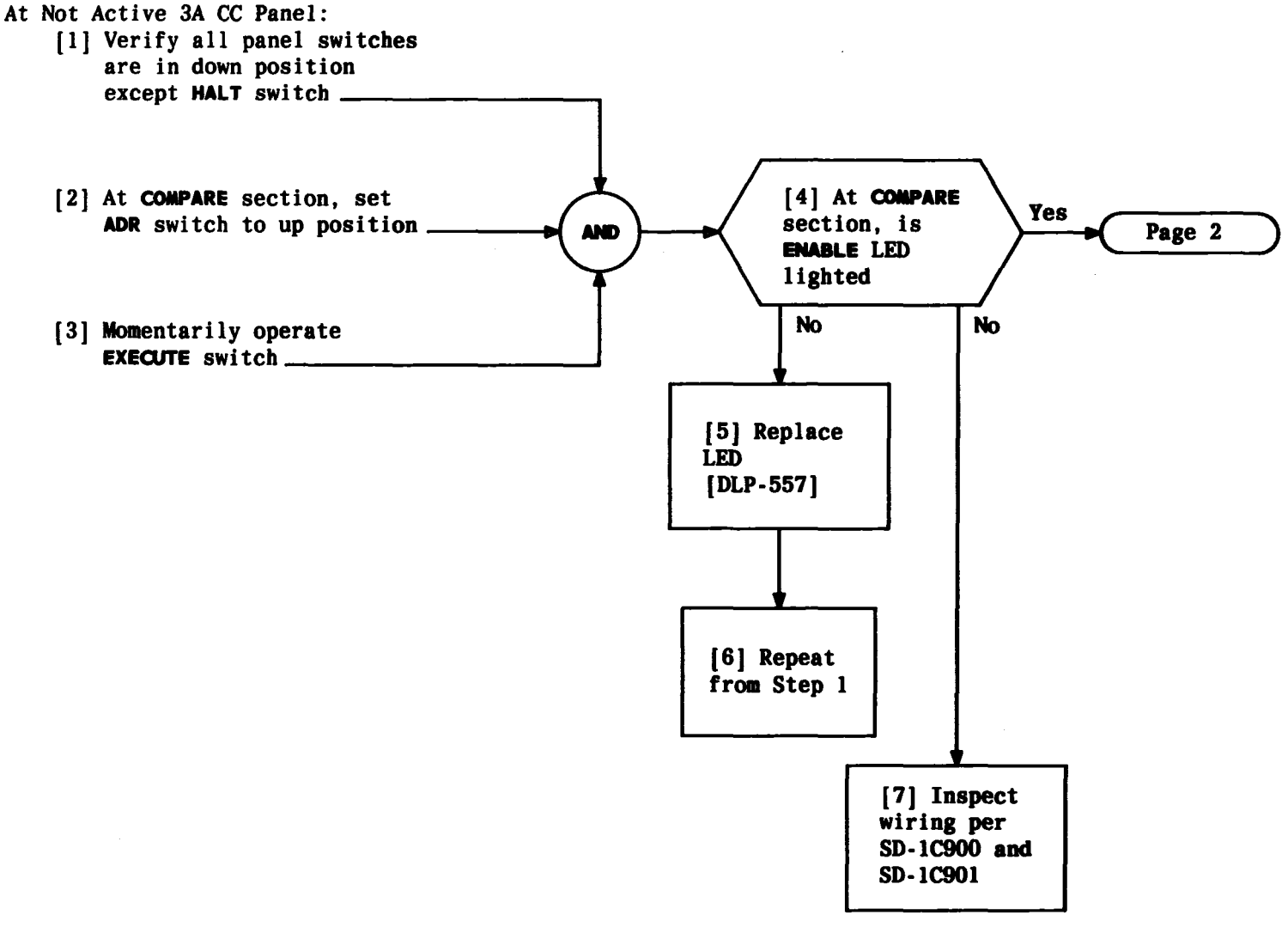

TEST LEDs AND SWITCHES OF COMPARE FUNCTION

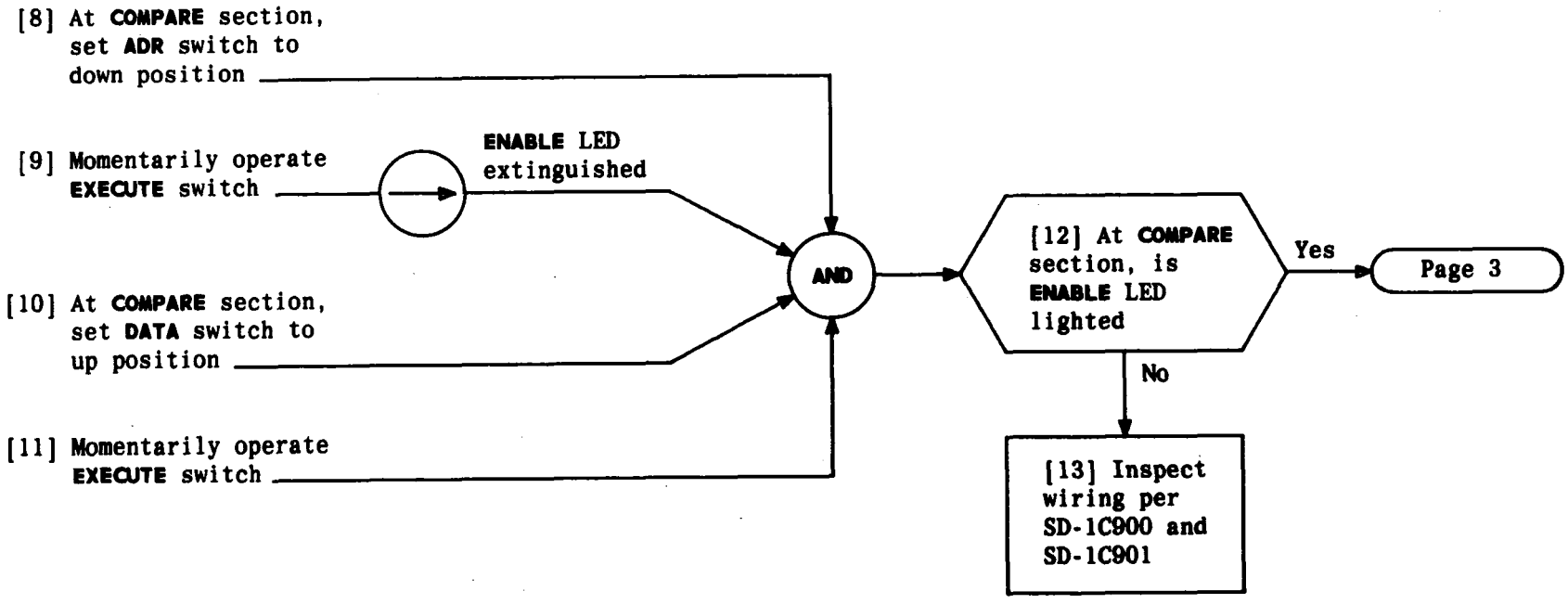

TEST LEDs AND SWITCHES OF COMPARE FUNCTION

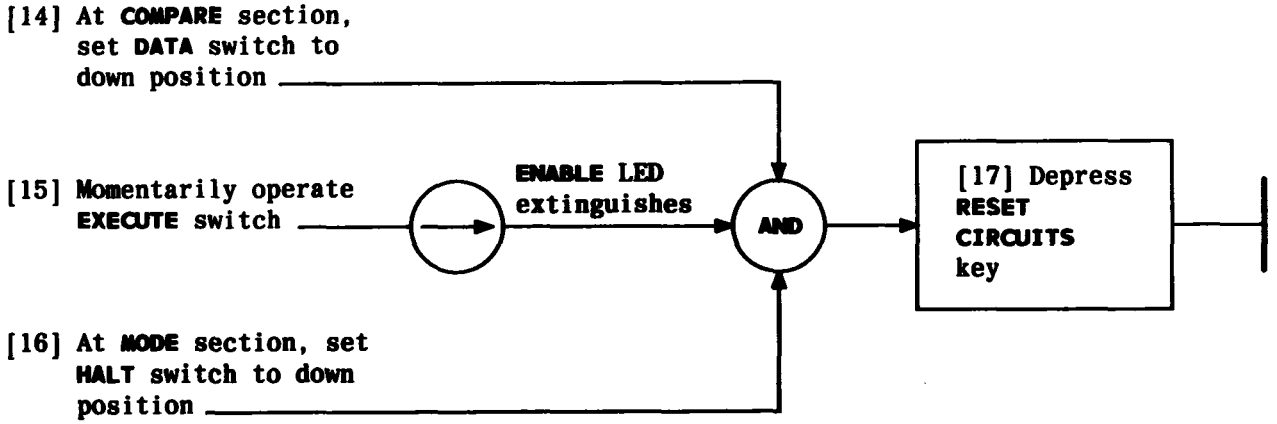

TEST LEDs AND SWITCHES OF COMPARE FUNCTION

At Not Active 3A CC Panel:

[1] Verify all panel switches except **HALT** are in down position

[2] At **REGISTER** section, set **LOAD** and **DISPLAY** switches to up position

[3] At **REGISTER SELECT** section, set **SPECIAL/GENERAL EXTENDED** switch to **SPECIAL** and switches **1** and **2** to up position

GENERAL EXTENDED LED extinguished
SPECIAL LED lighted
ST ADRS LED lighted

[4] Momentarily operate **EXECUTE** switch

[5] At **REGISTER** section, set **LOAD** and **DISPLAY** switches to down position

[6] At **MEMORY** section, set **DISPLAY** switch to up position

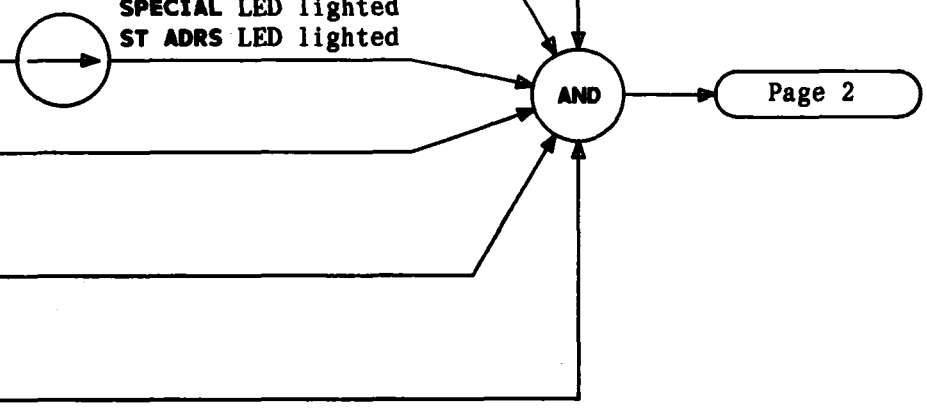

TEST 3A CC PANEL MEMORY FUNCTIONS AND INDICATORS

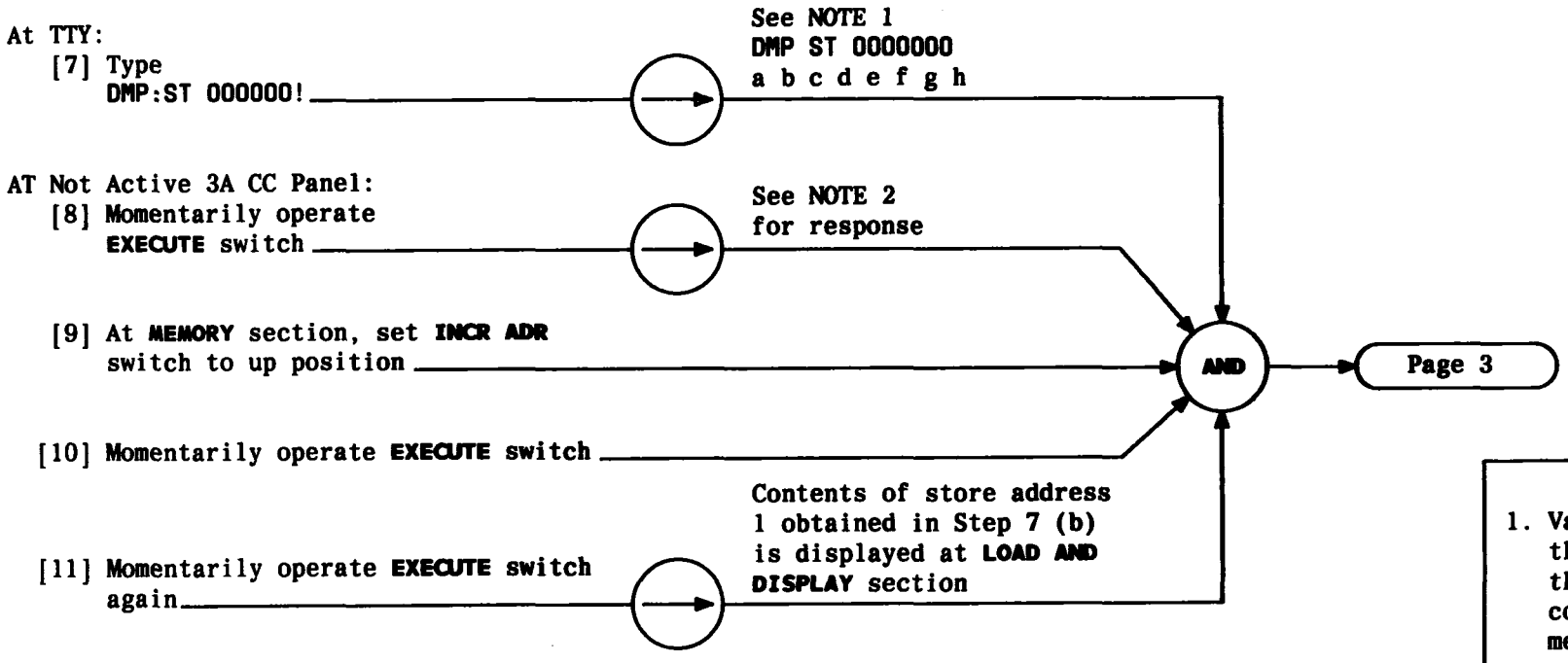

NOTES

1. Variables a through h are the octal contents of memory at store addresses 0 through 7
2. The binary equivalent of octal value a obtained in Step 7 is displayed by the LOAD AND DISPLAY LEDs 0 through 15. If parity is even for bits 0 through 8 and 9 through 16, PL and PH LEDs are also lighted

TEST 3A CC PANEL MEMORY FUNCTIONS AND INDICATORS

At Not Active 3A CC Panel:

[12] At **MEMORY** section, set **DISPLAY** and **INCR ADR** switches to down position

[13] At **REGISTER** section, set **DISPLAY** switch to up position

[14] Momentarily operate **EXECUTE** switch

[15] At **REGISTER** section, set **LOAD** switch to up position

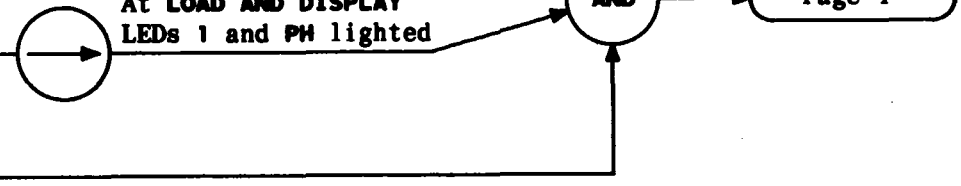

TEST 3A CC PANEL MEMORY FUNCTIONS AND INDICATORS

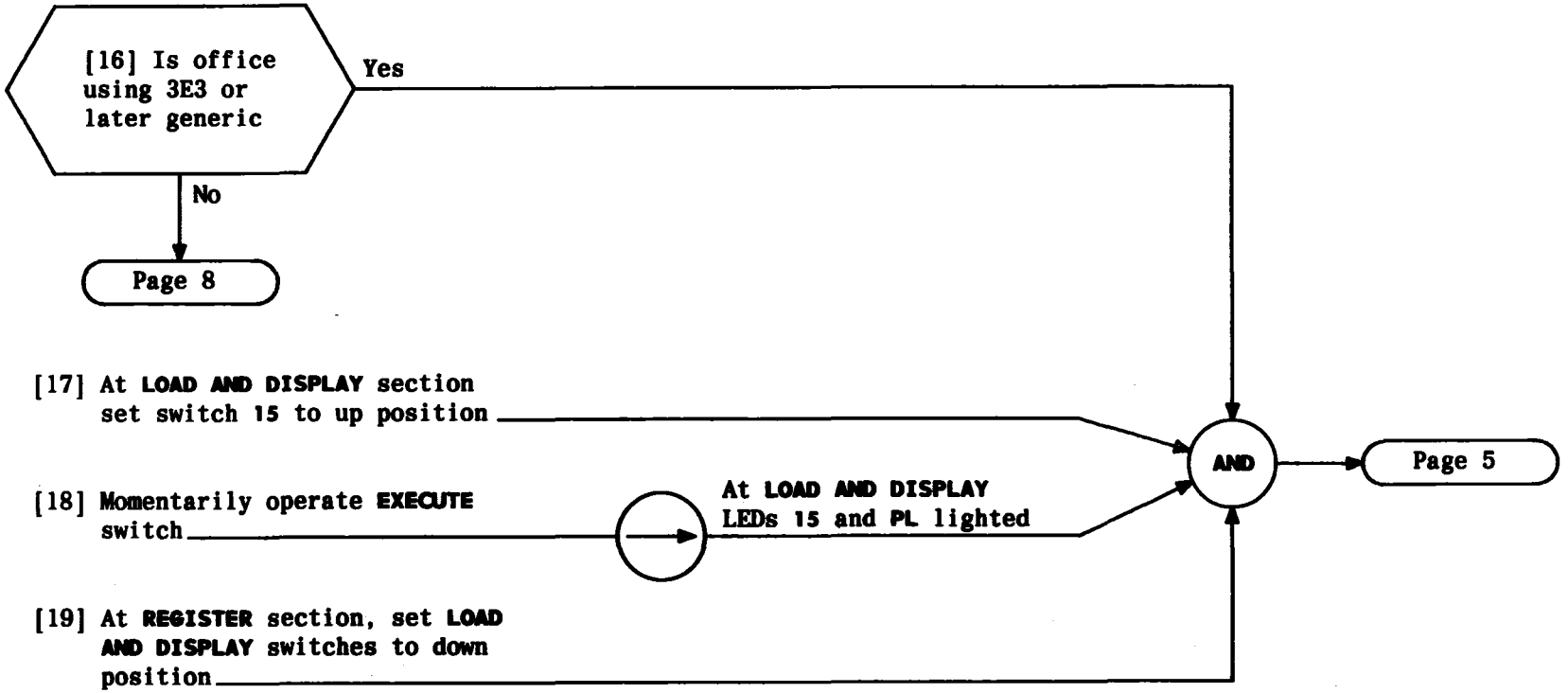

TEST 3A CC PANEL MEMORY FUNCTIONS AND INDICATORS

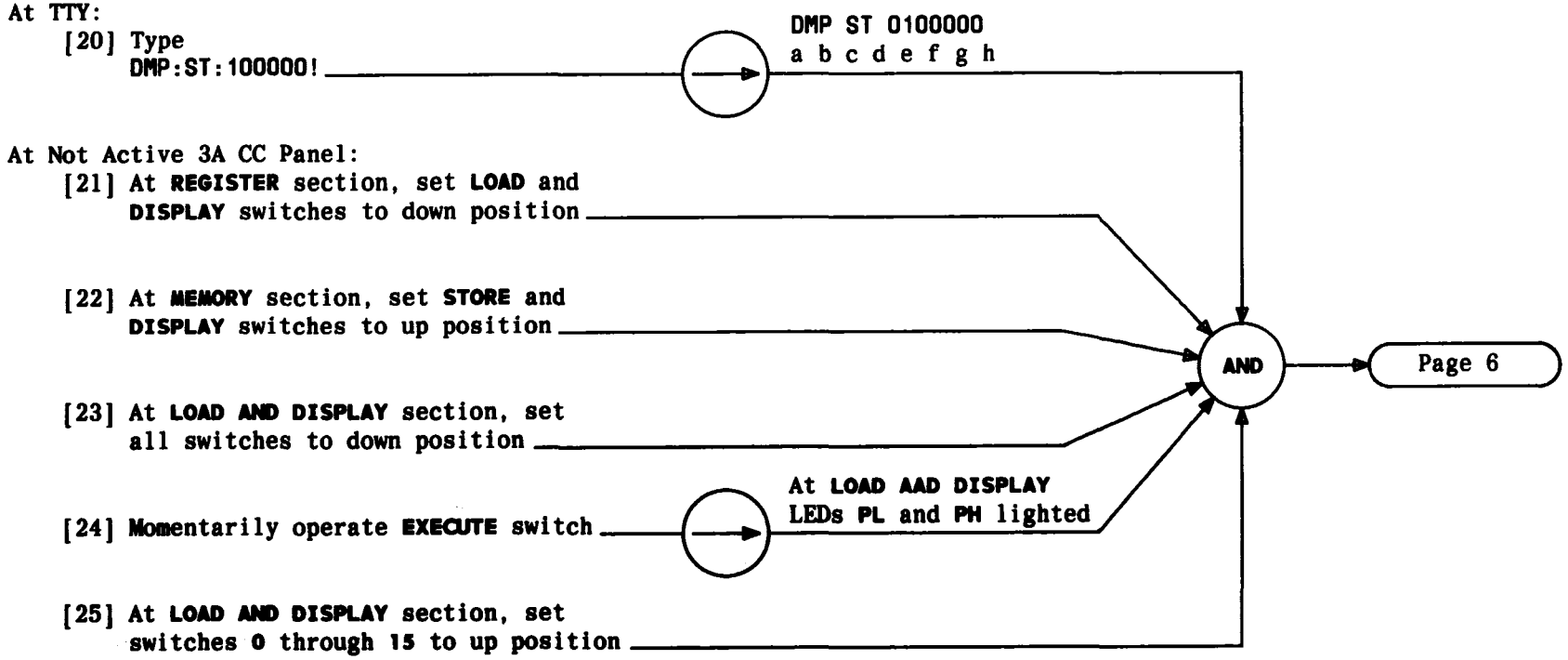

TEST 3A CC PANEL MEMORY FUNCTIONS AND INDICATORS

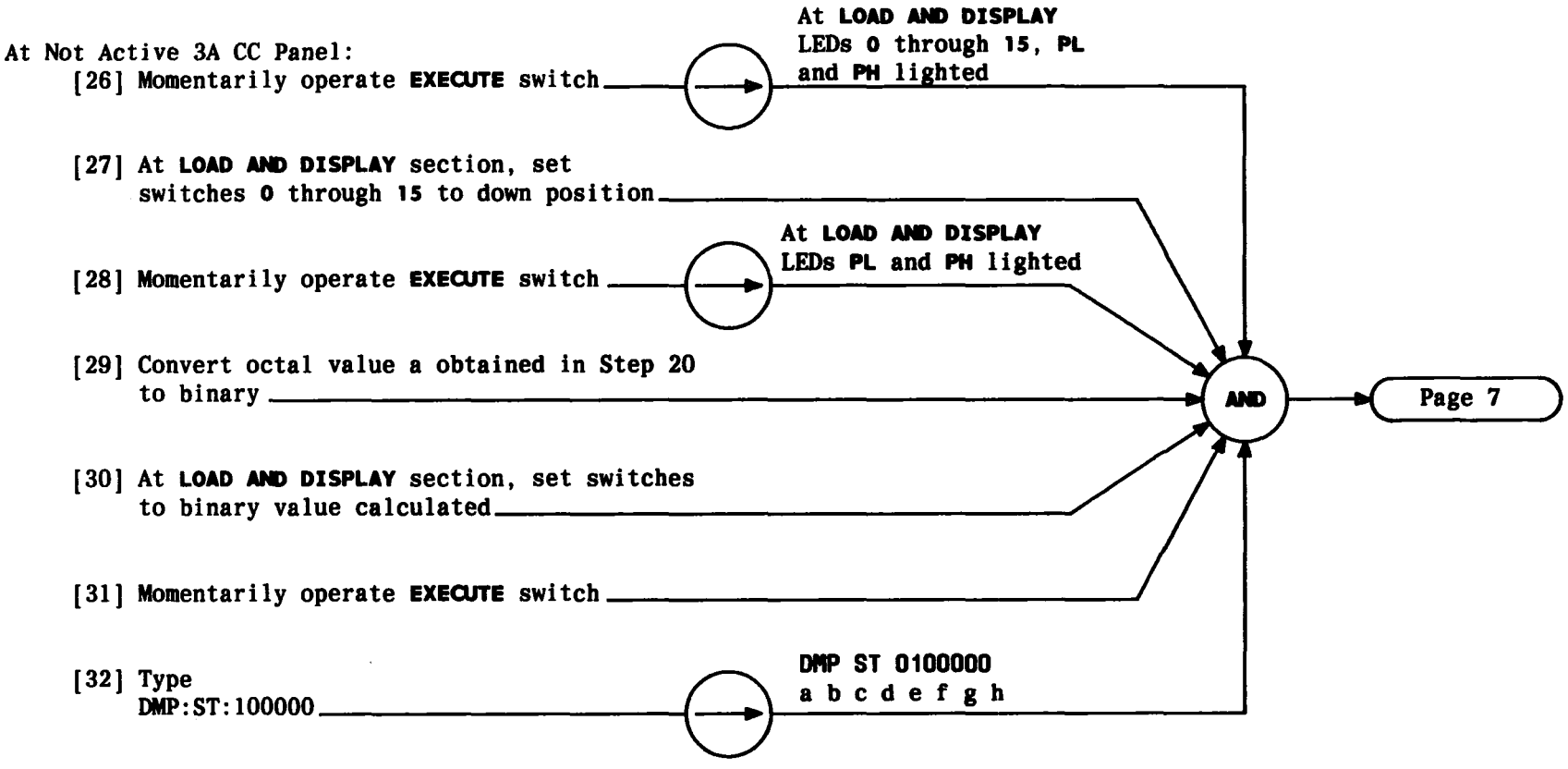

TEST 3A CC PANEL MEMORY FUNCTIONS AND INDICATORS

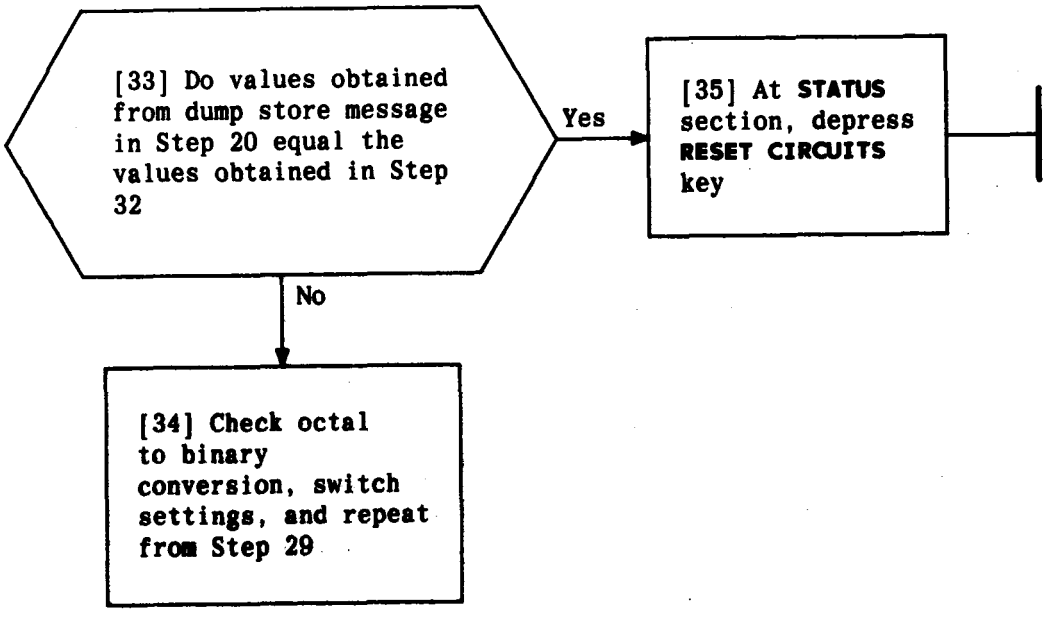

TEST 3A CC PANEL MEMORY FUNCTIONS AND INDICATORS

At Not Active 3A CC Panel:

[36] At **LOAD AND DISPLAY** section
set switch **12** and **13** to up position

[37] Momentarily operate **EXECUTE** switch

[38] At **REGISTER** section, set **LOAD** and
DISPLAY switches to down position

At **LOAD AND DISPLAY**
LEDs **12**,**13**,**PL** and **PH** lighted

AND

Page 9

At **TTY**:

[39] Type
DMP:ST 030000!

DMP ST 0030000
a b c d e f g h

At Not Active 3A CC Panel:

[40] At **REGISTER** section, set **LOAD** and **DISPLAY** switches to down position

[41] At **MEMORY** section, set **STORE** and **DISPLAY** switches to up position

[42] At **LOAD** and **DISPLAY** section, set all switches to down position

[43] Momentarily operate **EXECUTE** switch

[44] At **LOAD AND DISPLAY** section, set switches **0** through **15** to up position

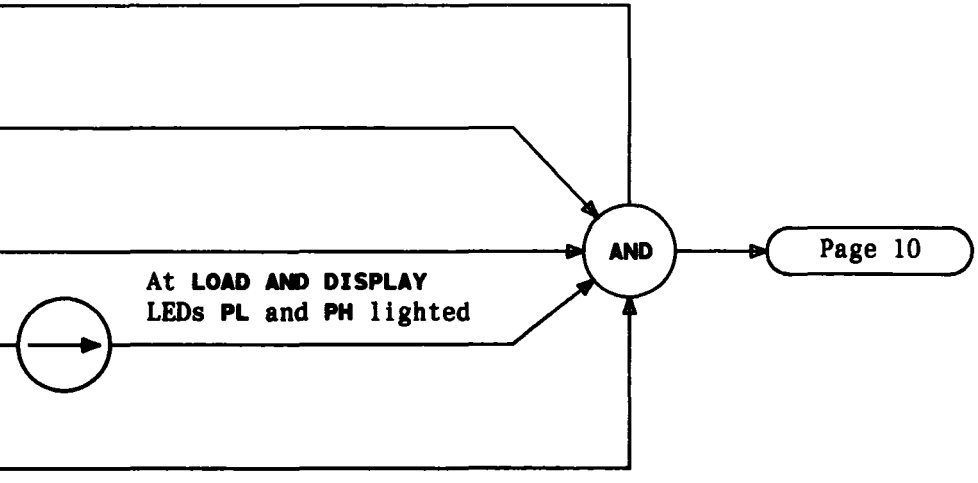

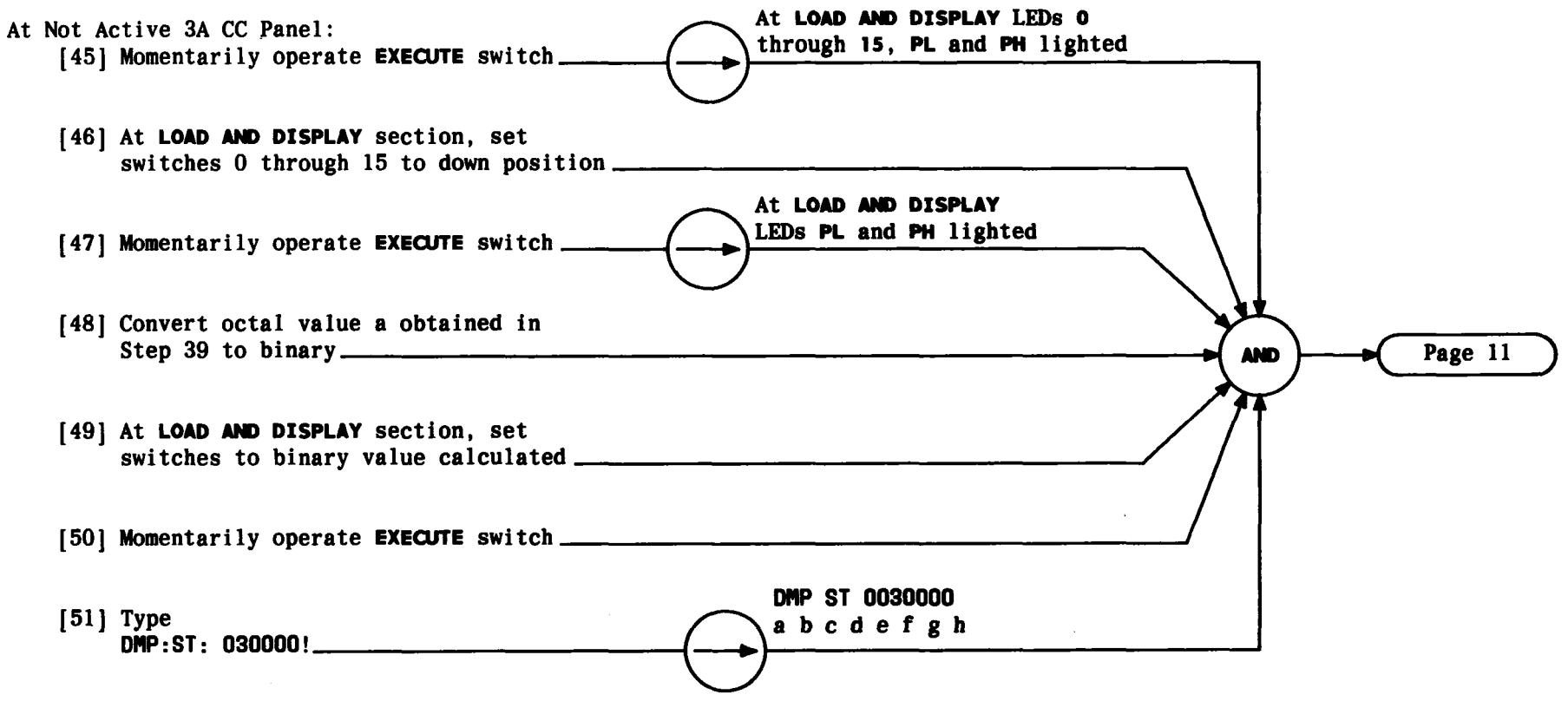

TEST 3A CC PANEL MEMORY FUNCTIONS AND INDICATORS

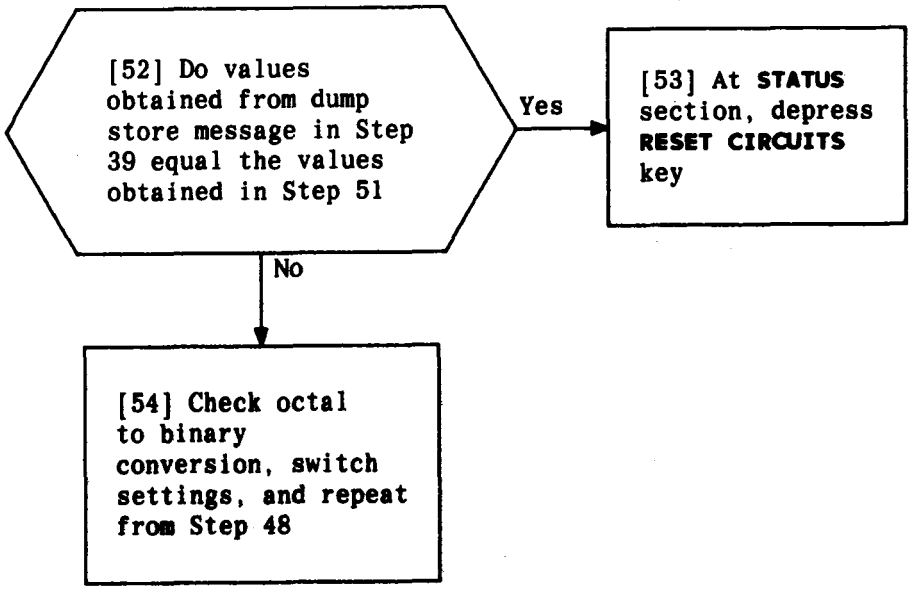
[52] Do values obtained from dump store message in Step 39 equal the values obtained in Step 51
Yes
[53] At STATUS section, depress RESET CIRCUITS key
No
[54] Check octal to binary conversion, switch settings, and repeat from Step 48

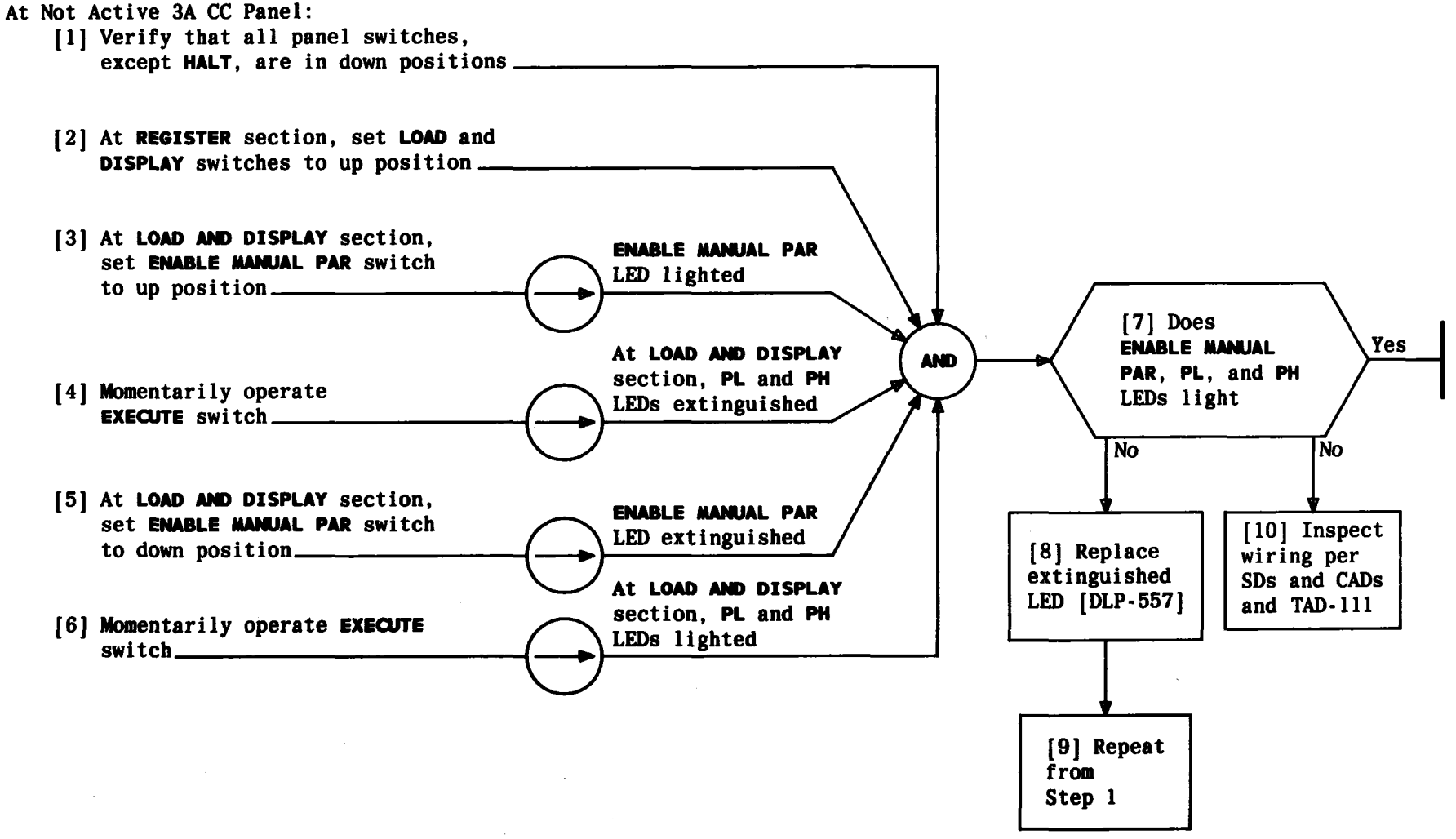

TEST 3A CC PANEL ENABLE MANUAL PARITY FUNCTION AND INDICATOR

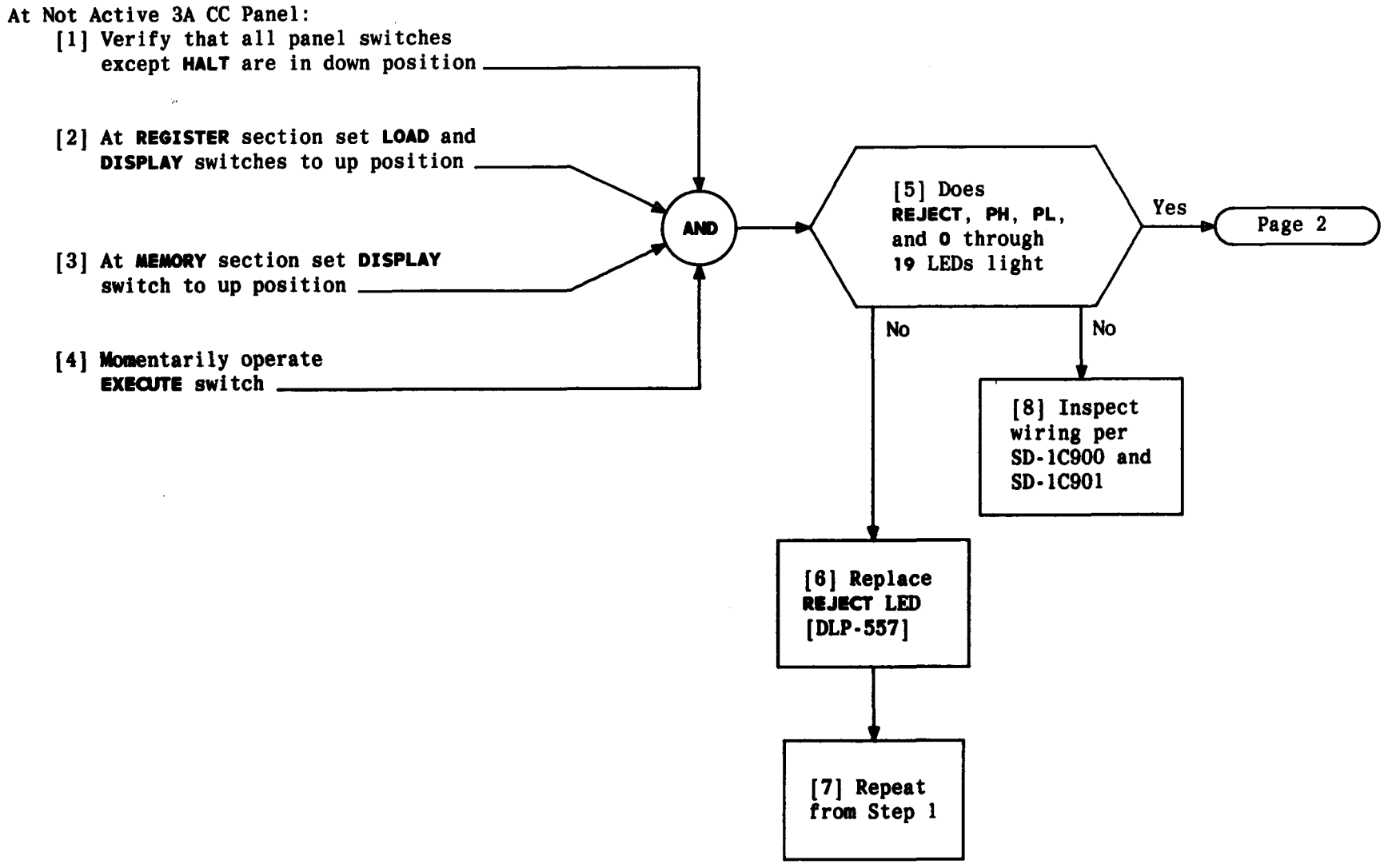

TEST 3A CC PANEL REJECT FUNCTION AND INDICATOR

[9] At **MEMORY** section, set **DISPLAY** switch to down position

[10] Momentarily operate **EXECUTE** switch

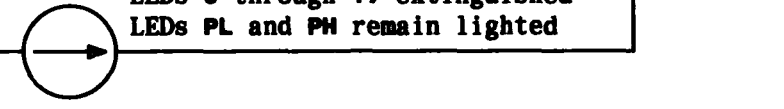

REJECT LED extinguished
LEDs **0** through **19** extinguished
LEDs **PL** and **PH** remain lighted

TEST 3A CC PANEL REJECT FUNCTION AND INDICATOR

At Not Active 3A CC Panel:

1. Return 3A CC to normal operating conditions as follows:

   1.1 Verify that all panel switches are in down position

   1.2 At **STATUS** section, depress **MANUAL** key

   Response: **MANUAL** lamp extinguished

At SSP:

   1.3 Depress **LOCK** key

   Response: **LOCK** lamp extinguished
   FORCED LED extinguished
   FORCE lamp extinguished
   SELECT (A) lamp extinguished (a = active CU)
   At Not Active SYS section:
   UNAVAILABLE LED extinguished
   OUT OF SERVICE LED lighted
   At TTY: REPT CU STAT AVL
   After main store updates:
   At SYC section:
   OUT OF SERVICE LED extinguished
   STANDBY LED lighted
   At TTY: UPD OMAS COMPL

End of procedure

RETURN 3A CC TO NORMAL OPERATING CONDITION

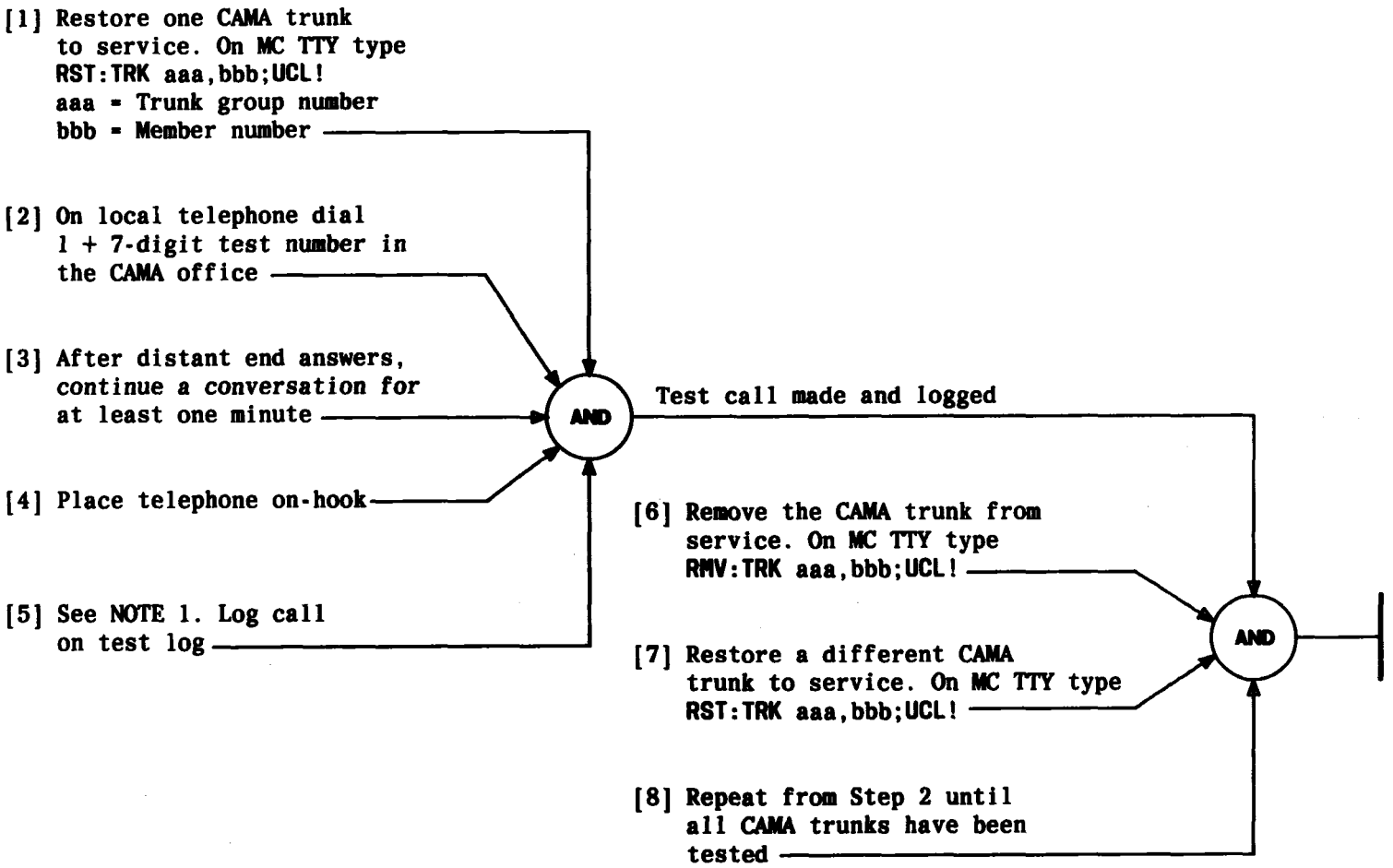

NOTE 1
If the number reached is different from the number dialed, log both the number dialed and the number reached

PLACE TEST CALL ON A CAMA TRUNK

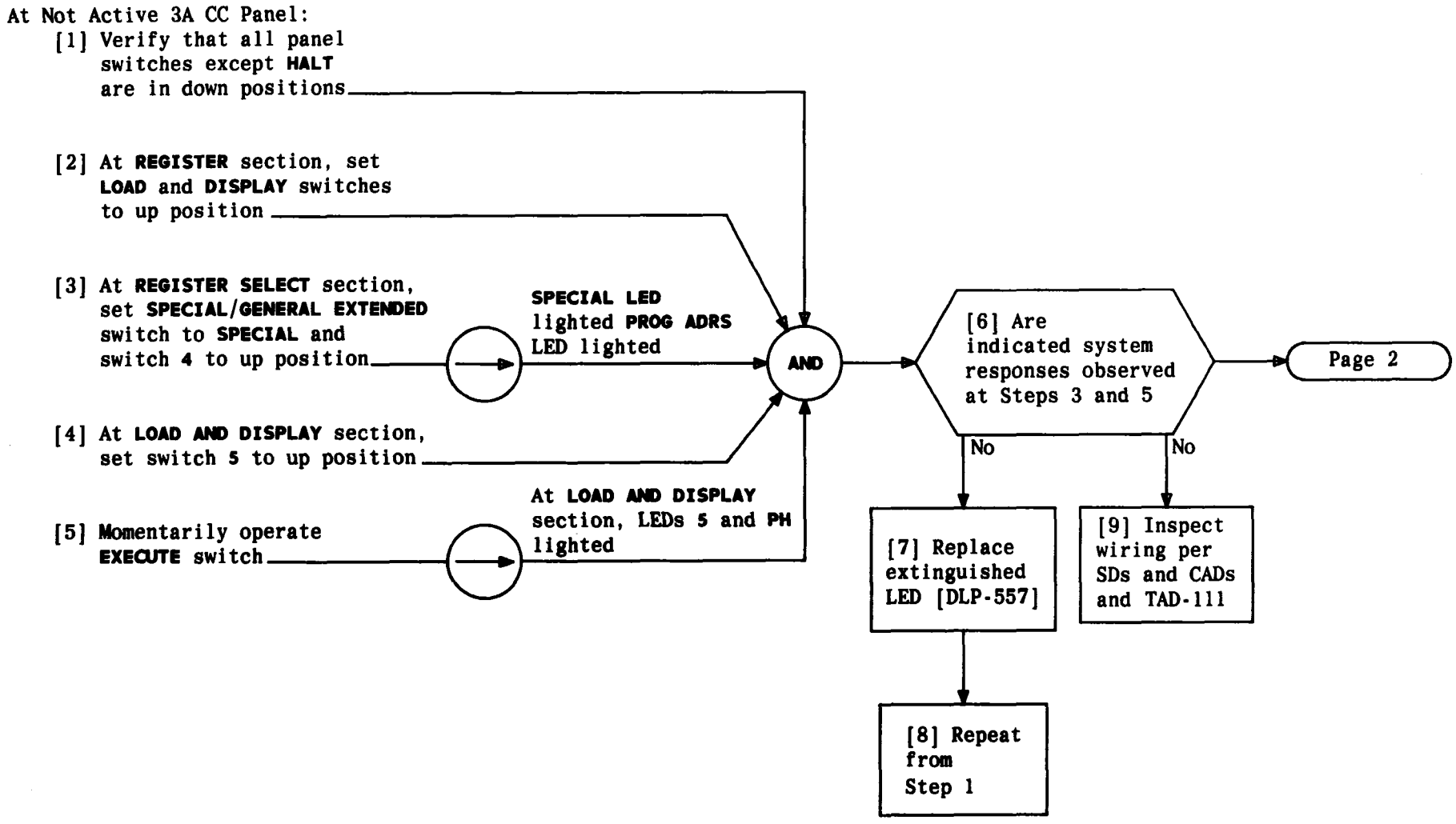

TEST 3A CC PANEL STEP FUNCTIONS

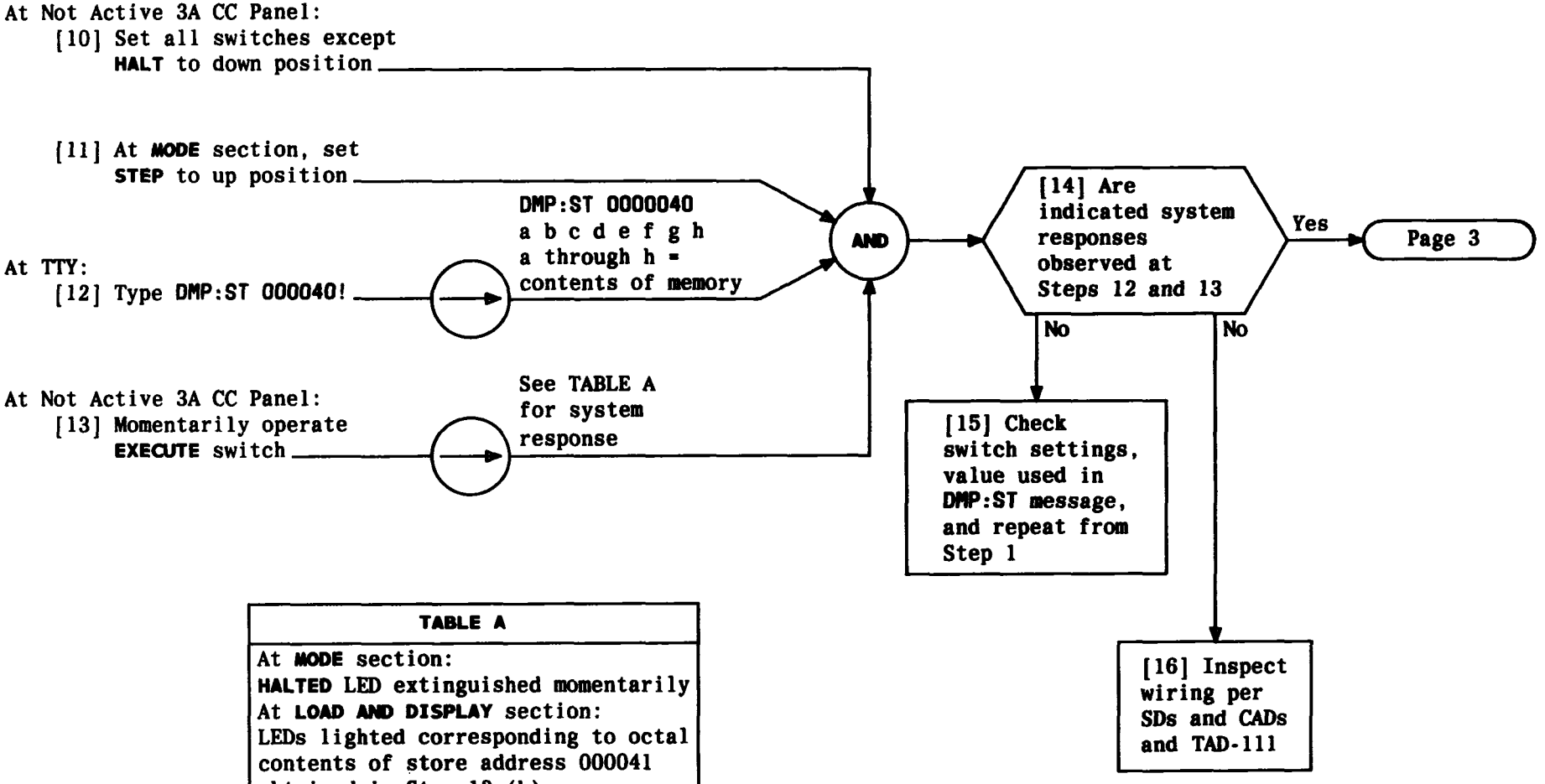

TABLE A
At **MODE** section: **HALTED** LED extinguished momentarily At **LOAD AND DISPLAY** section: LEDs lighted corresponding to octal contents of store address 000041 obtained in Step 12 (b)

TEST 3A CC PANEL STEP FUNCTIONS

At Not Active 3A CC Panel:

[17] Set all switches to down position

[18] Momentarily operate **EXECUTE** switch

[19] At **STATUS** section, depress **RESET CIRCUITS** key

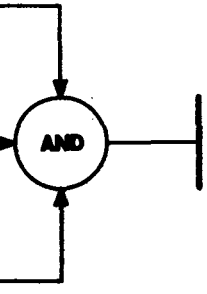

TEST 3A CC PANEL STEP FUNCTIONS

[1] See CAUTION 1. Obtain appropriate packs (as defined in Trouble Locating Manual) from circuit pack storage

[2] Visually examine replacement circuit pack(s) for component damage, contact scratches, or other imperfections which may be potential sources of trouble

[3] At System Status Panel, depress **CIRCUIT POWER** until extinguished

[4] Depress **LAMP POWER** until extinguished

AND

[5] Remove the questionable circuit pack from apparatus mounting

[6] Insert replacement pack into apparatus mounting

[7] At System Status Panel, depress **LAMP POWER**

[8] Depress **CIRCUIT POWER**

AND

REPLACE SYSTEM STATUS PANEL CONTROLLER CIRCUIT PACK

CAUTION 1
Contact contamination may occur unless circuit pack is handled only by the edges

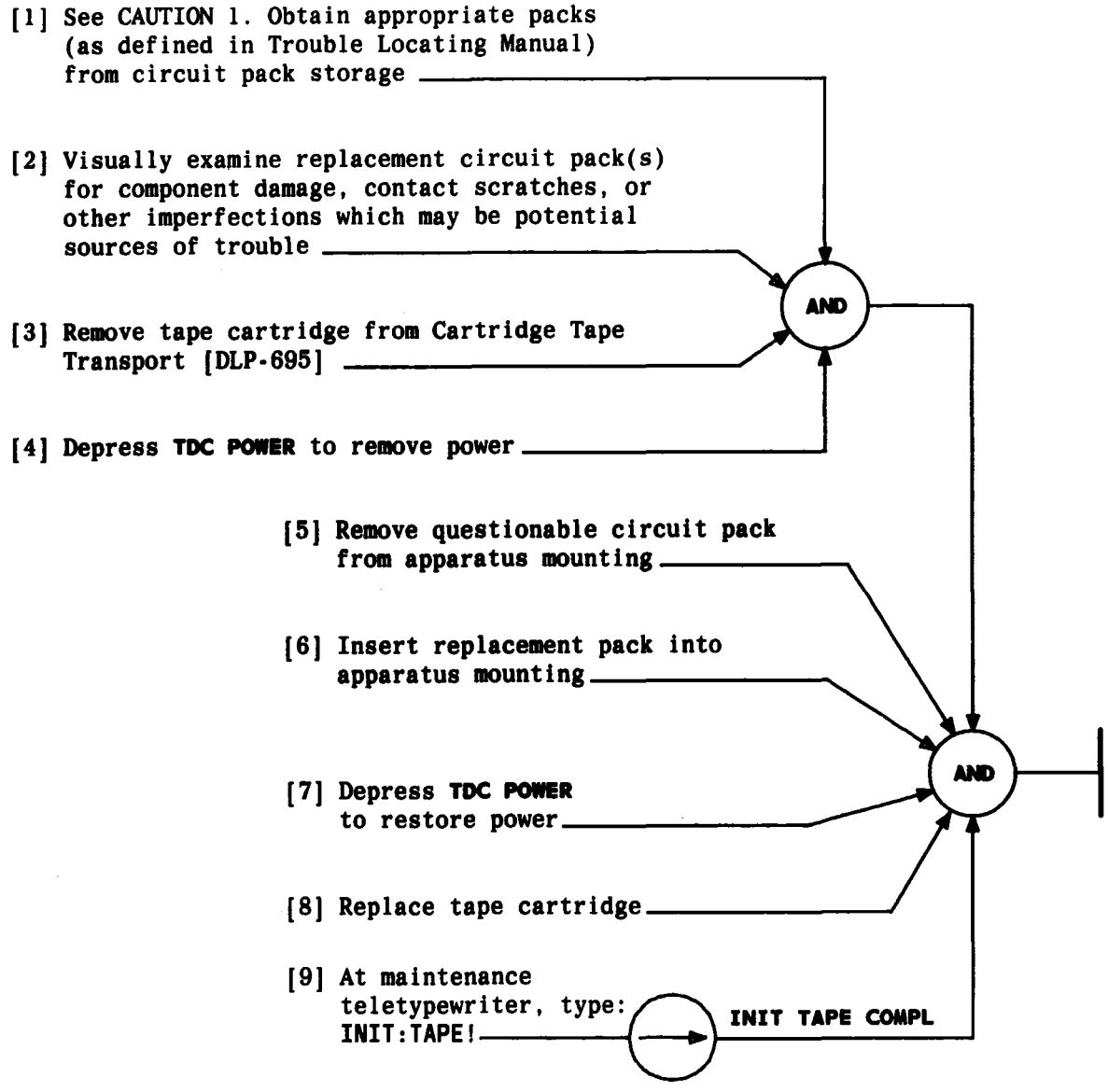

REPLACE TAPE DATA CONTROLLER CIRCUIT PACK

CAUTION 1
Contact contamination may occur unless circuit pack is handled only by the edges

Issue 3	AUG 1984
233-142-100	DLP
PAGE 1 of 1	674

At System Status Panel:

[1] Verify **SYSTEM NORMAL** lamp is ON

[2] At System Status Panel, depress **LOCK** key

[3] At TTY type **RMV:CU!**

[4] At 3A CC Panel depress **MANUAL** key on BOTH control units

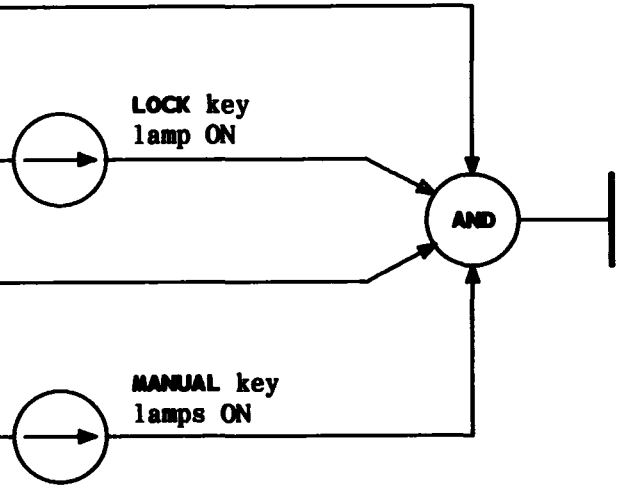

PREPARE SYSTEM FOR OFF-LINE BOOTSTRAP PROCEDURE

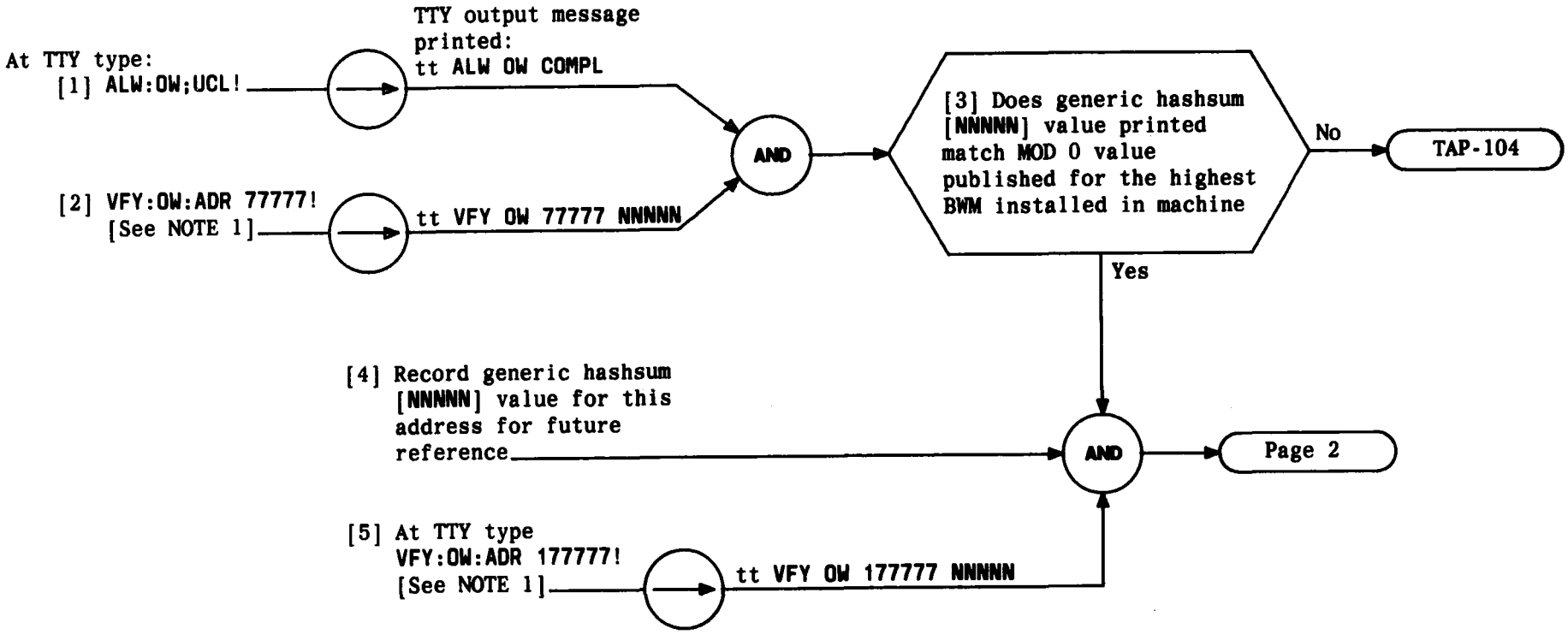

VERIFY GENERIC HASHSUMS USING BROADCAST WARNING MESSAGE (BWM) (SO-2 GENERIC)

NOTE 1 NNNNN is the generic hashsum value in decimal	
Issue 3	AUG 1984
233-142-100	DLP
PAGE 1 of 2	676

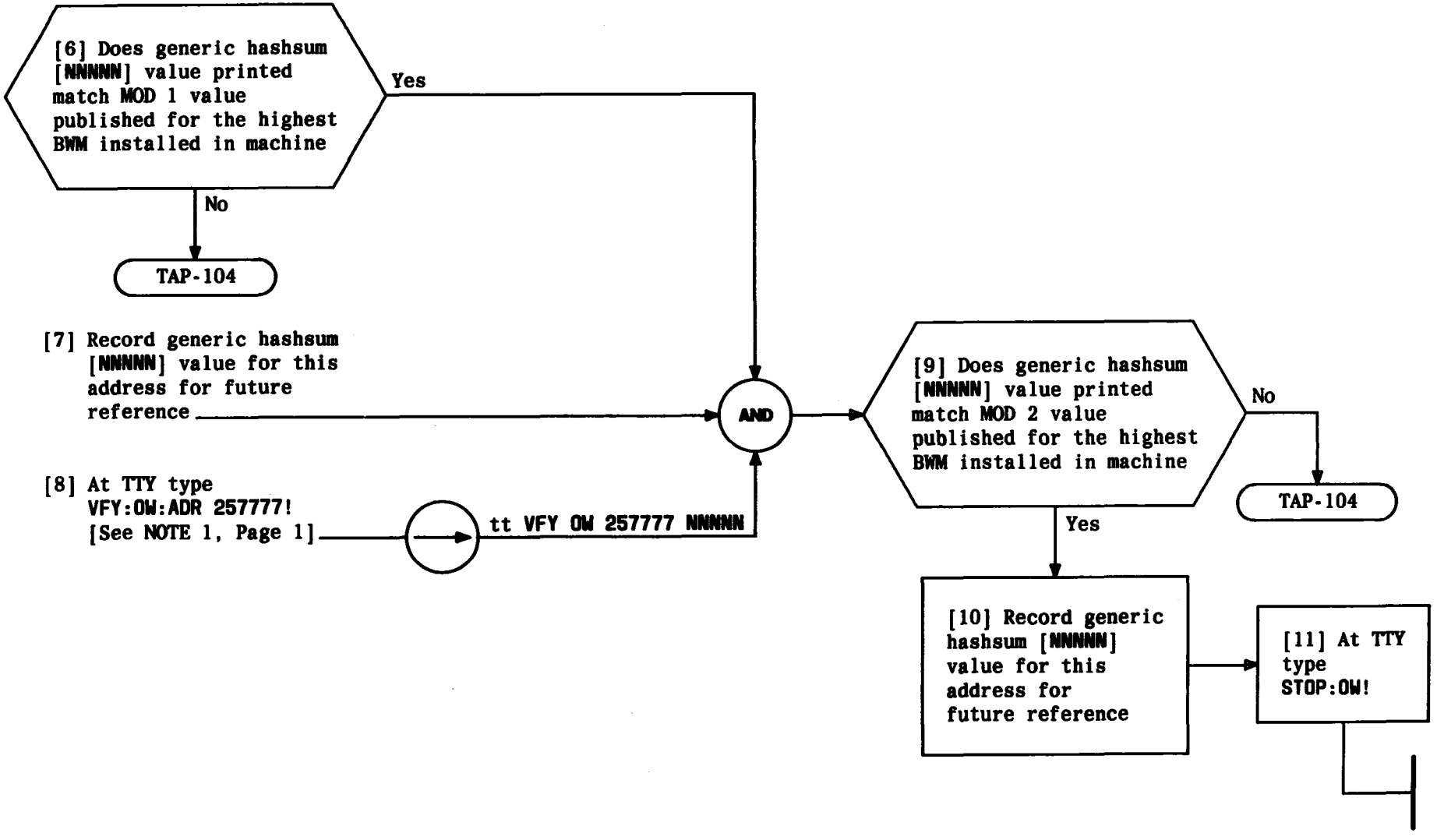

VERIFY GENERIC HASHSUMS USING BROADCAST WARNING MESSAGE (BWM) (SO-2 GENERIC)

[1] See NOTE 1. At TTY type:
DMP:ST 261251!
[FIG. 1]

TTY output message printed:
tt DMP ST 261251
xxxxx A BCCCCC xxxxxx

[2] Record A and B values of output message for future reference

[3] Using TTY output message of Step 1, multiply value corresponding to A by 200000

[4] Add value corresponding to BCCCCC to result of Step 2

[5] Subtract 20 (octal) from result of Step 3

[6] Record result as address of translation hashsum (HHHHHH) for future reference

AND

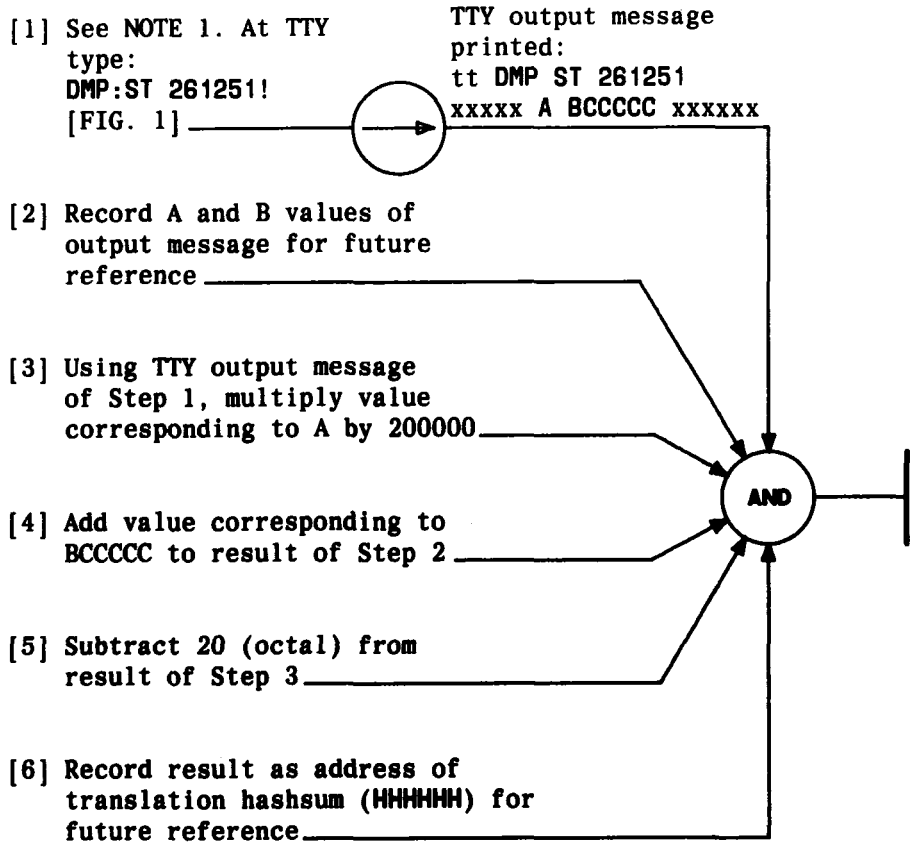

```
STEP 1 - DMP ST 261251
         000001 177707 xxxxxx xxxxxx xxxxxx xxxxxx xxxxxx xxxxxx
   A VALUE ──┘ │ └── C VALUE
             B VALUE

STEP 2 - (A = 1)
         1 X 200000 = 200000

STEP 3 - (BCCCCC = 177707)
         200000
         177707
         ------
         377707

STEP 4 - 377707
            -20
         ------
         377667 = ADDRESS OF TRANSLATION HASHSUM (HHHHHH)
                  TO BE RECORDED
```

FIG. 1 — Example of a Translation Hashsum Calculation

NOTE 1 All calculations are performed in octal; A, B, and C are variables	
Issue 3	AUG 1984
233-142-100	DLP
PAGE 1 of 1	677

CALCULATE TRANSLATION HASHSUMS

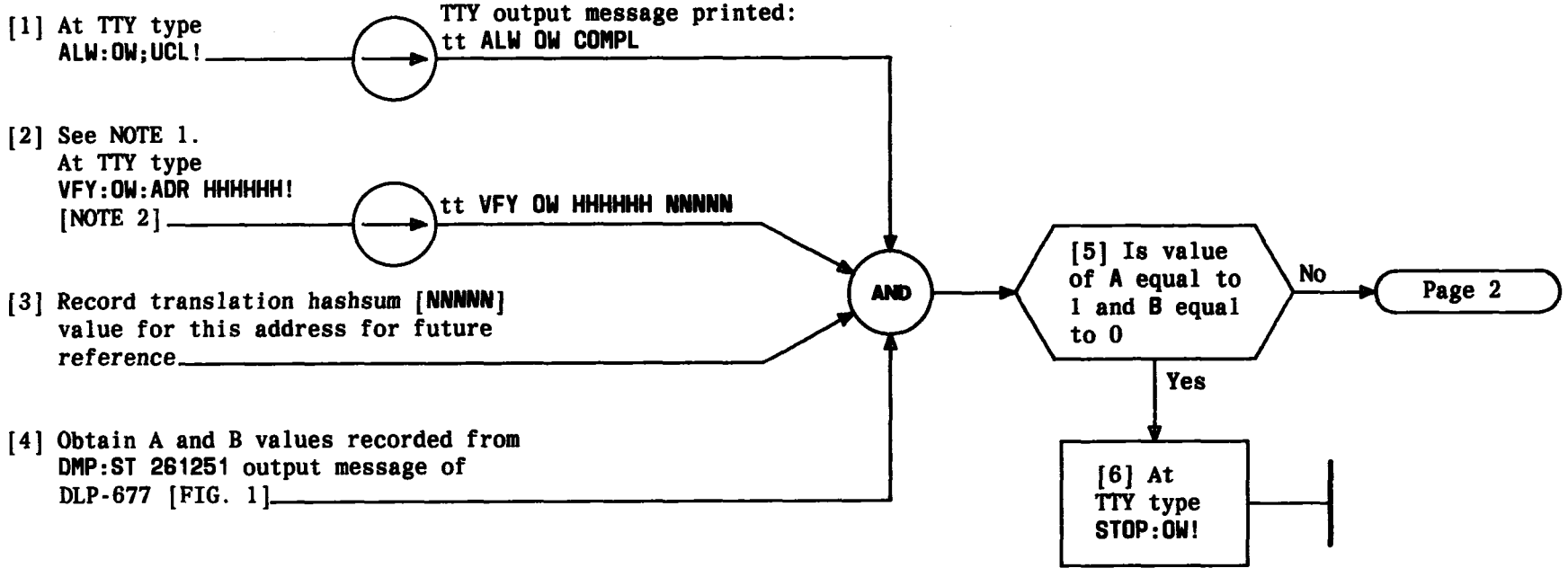


```
DMP:ST 261251
000001 177707 xxxxxx xxxxxx xxxxxx xxxxxx xxxxxx xxxxxx
A VALUE
B VALUE
C VALUE
```

NOTE: A, B, AND C ARE VARIABLES

FIG. 1 – Output from DMP:ST Message

NOTES
1. HHHHHH is resulting address of translation hashsum calculation
2. NNNNN is translation hashsum value in decimal

Issue 3	AUG 1984
233-142-100	DLP
PAGE 1 of 2	678

PRINT TRANSLATION HASHSUMS

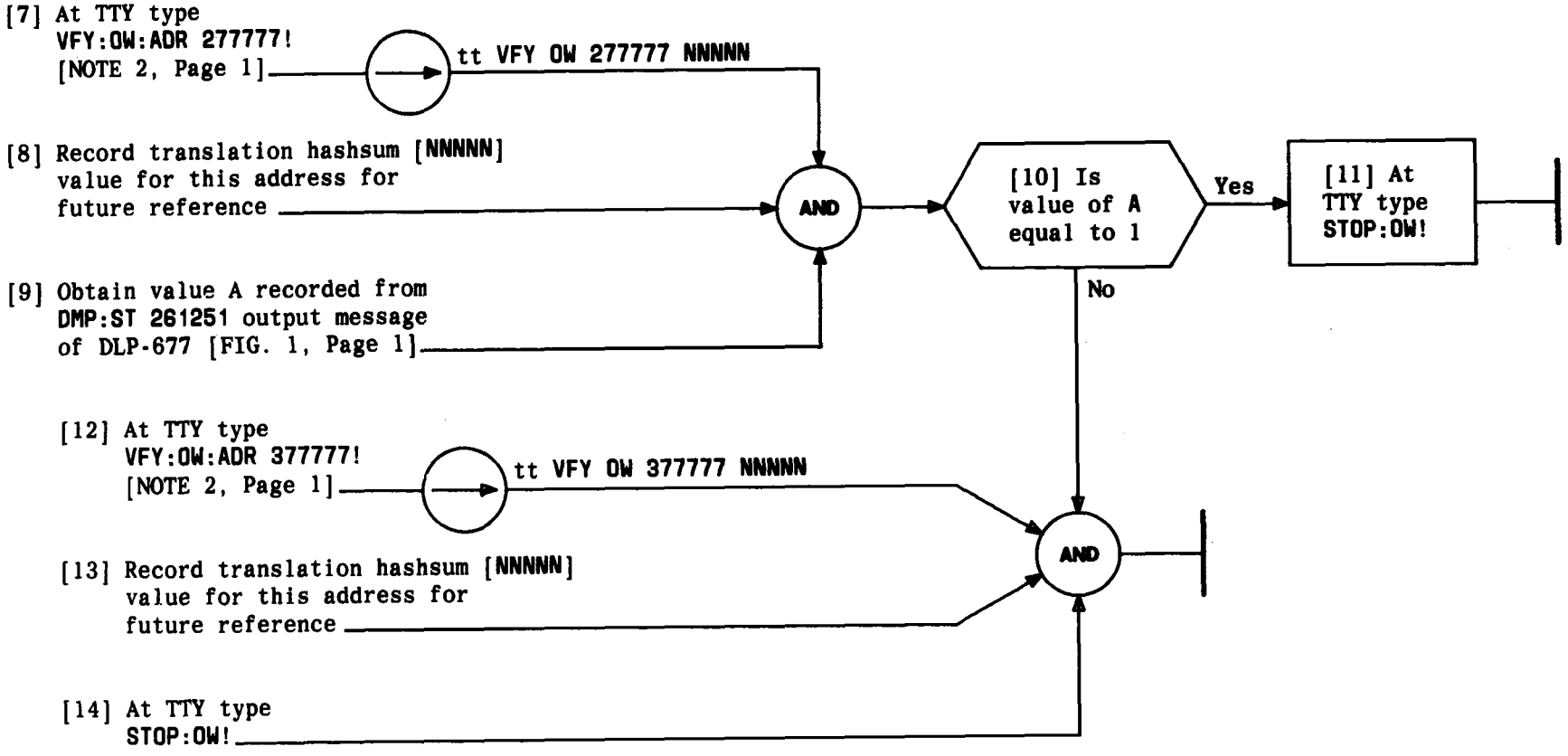

PRINT TRANSLATION HASHSUMS

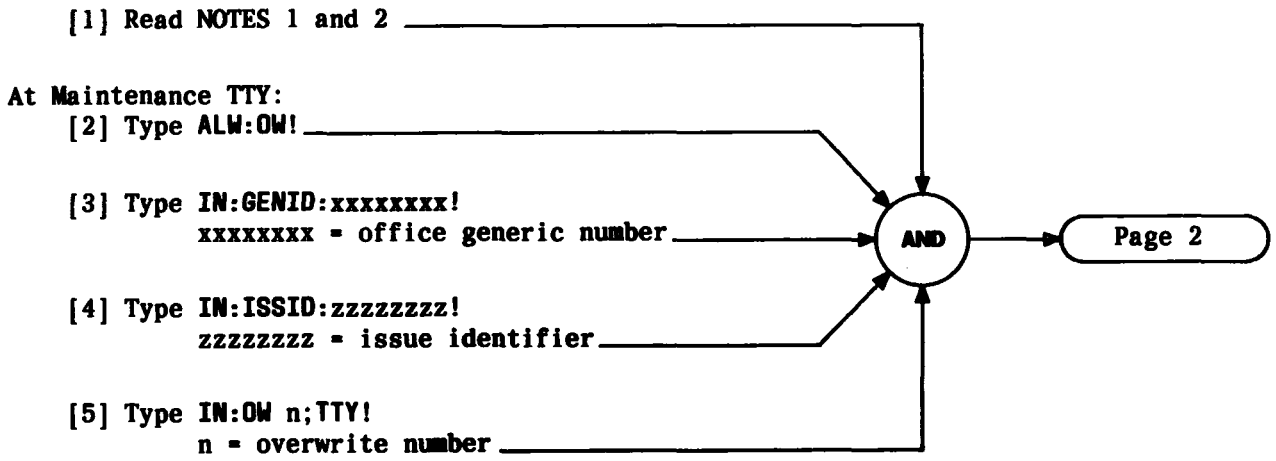

NOTES

1. System abnormalities must be corrected before this generic patch procedure is performed. The off-line SYC must be in standby
2. The order for the generic patch includes a listing (chips listing) of messages required in Steps 3, 4, 5, and 15

INSTALL GENERIC PATCH MANUALLY FOR OFFICES WITH 3E3 GENERIC OR LATER

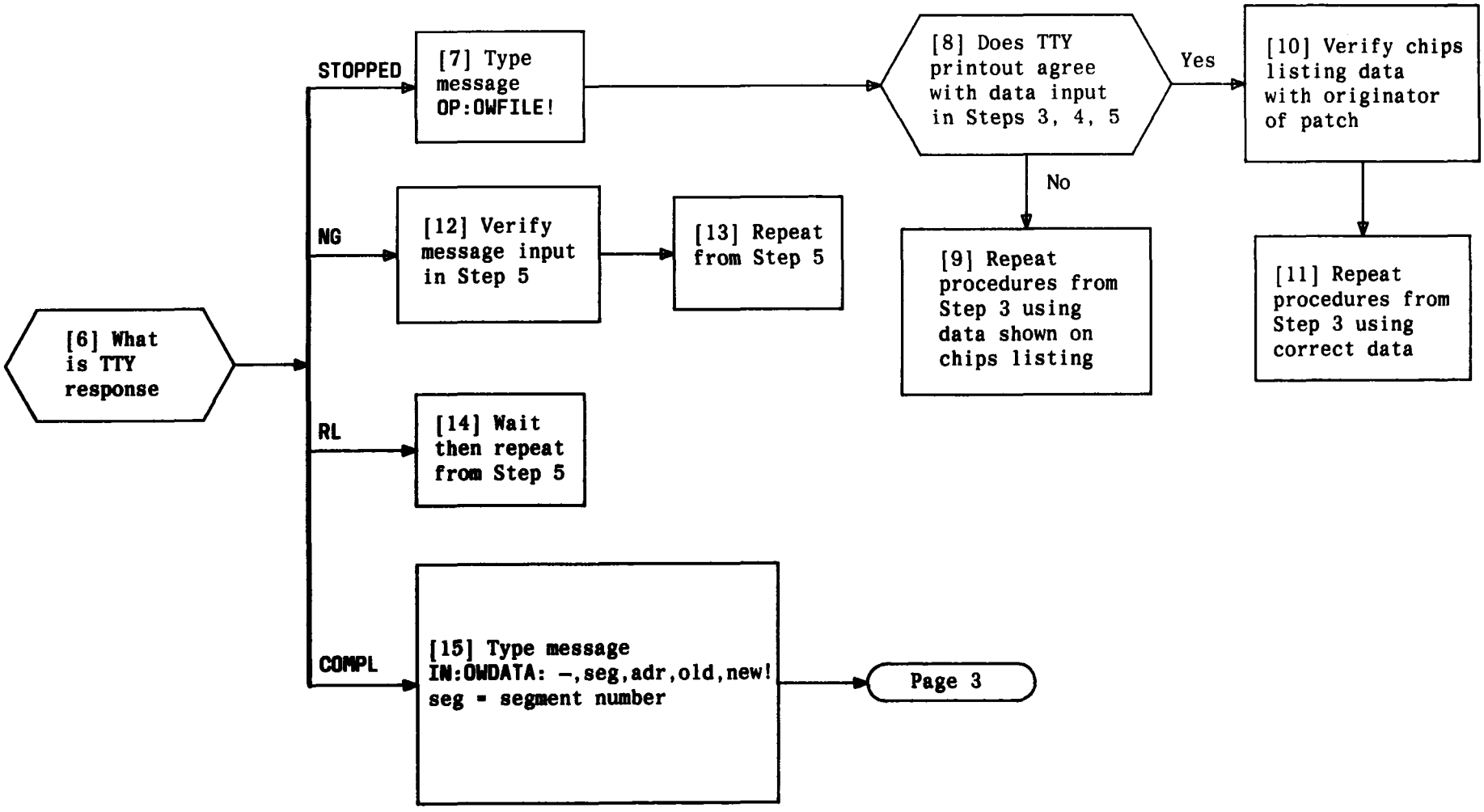

INSTALL GENERIC PATCH MANUALLY FOR OFFICES WITH 3E3 GENERIC OR LATER

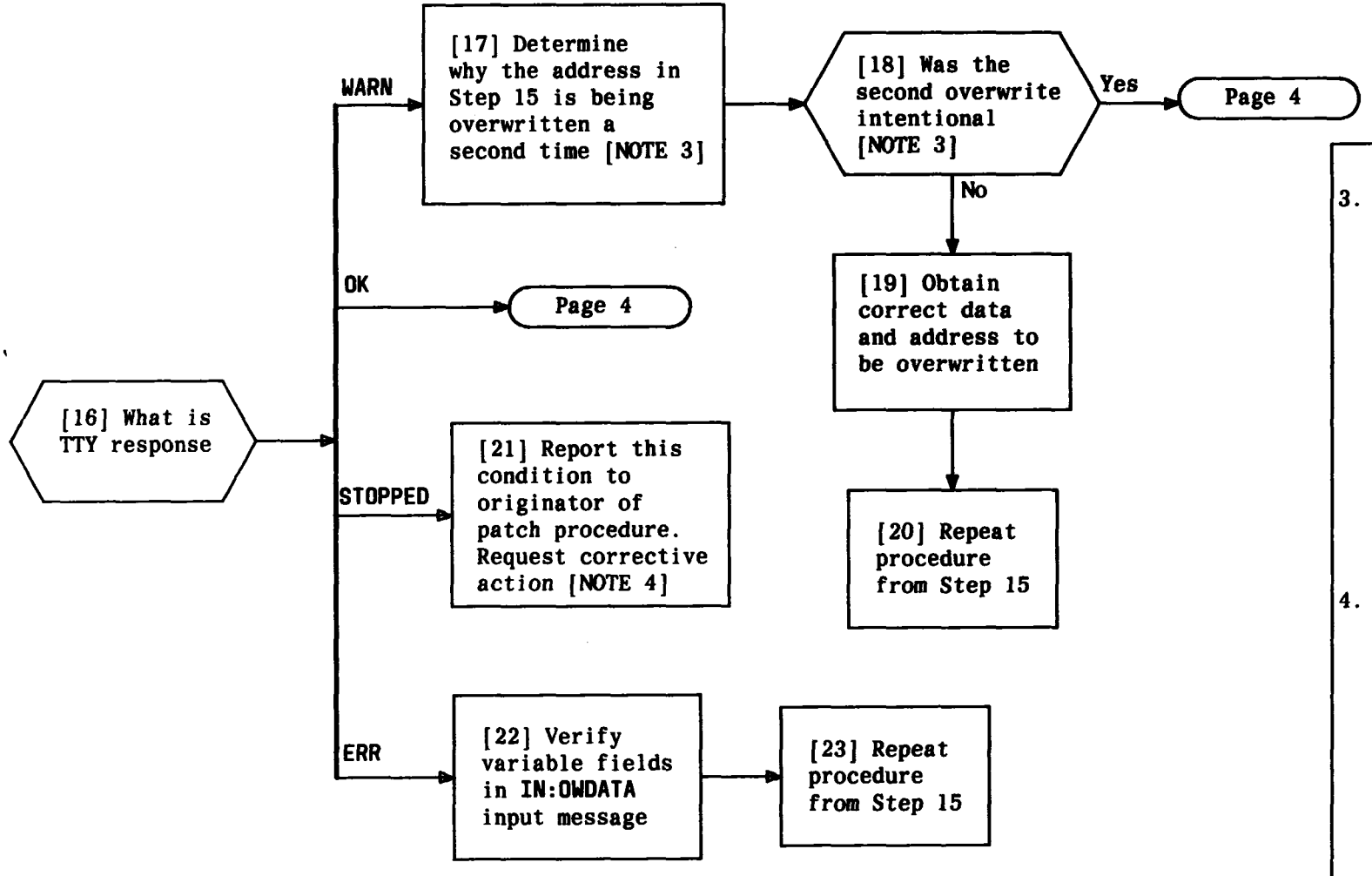

NOTES

3. The last IN:OWDATA input message specified an address that has been previously specified in this overwrite. This is a warning message. If the intent was to correct the previous specification, this message should be ignored
4. The last IN:OWDATA input message would have caused the overwrite buffer in the main store to overflow. It was thrown out. A similar response can be expected on any subsequent IN:OWDATA message for this overwrite. The overwrite is too big

INSTALL GENERIC PATCH MANUALLY FOR OFFICES WITH 3E3 GENERIC OR LATER

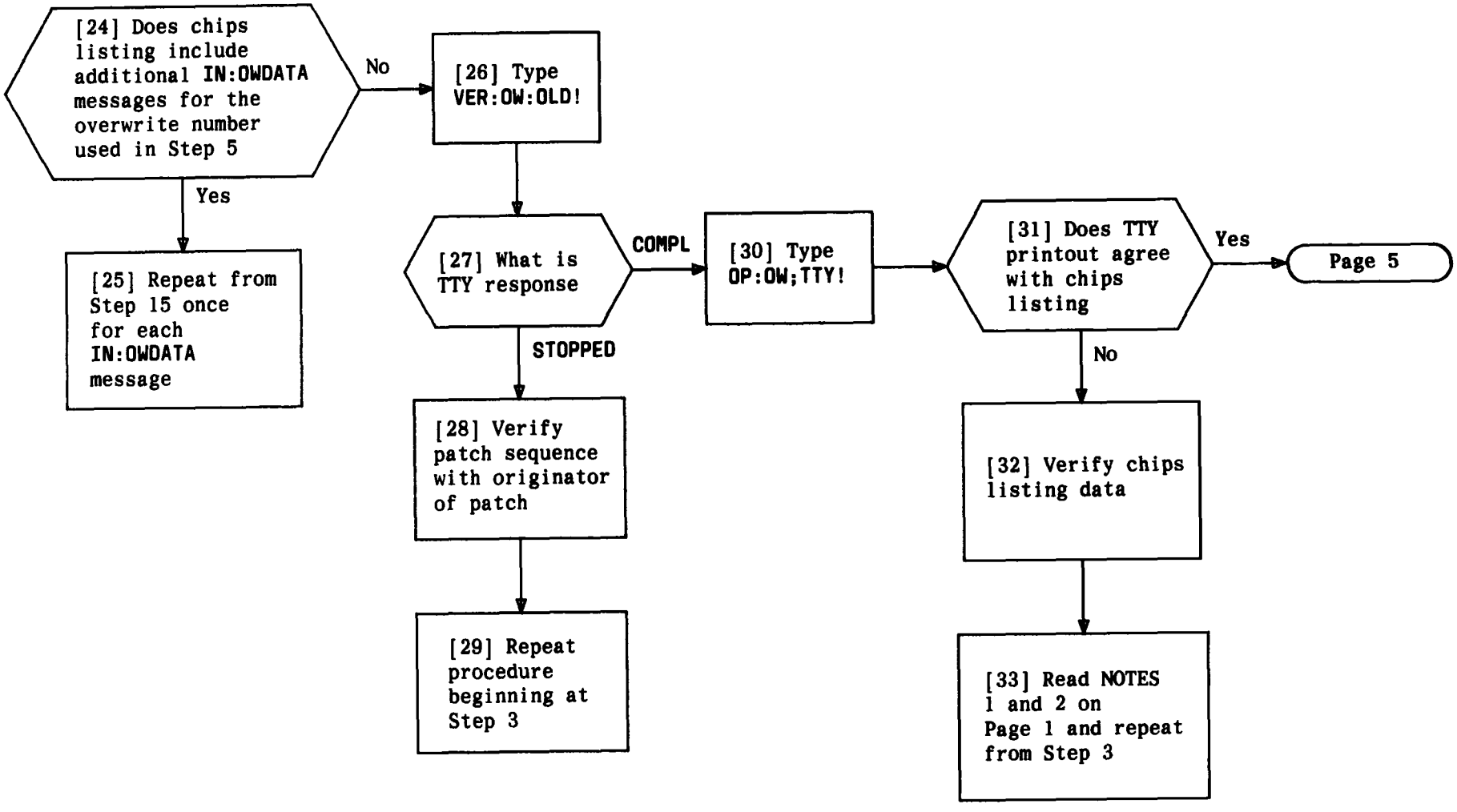

INSTALL GENERIC PATCH MANUALLY FOR OFFICES WITH 3E3 GENERIC OR LATER

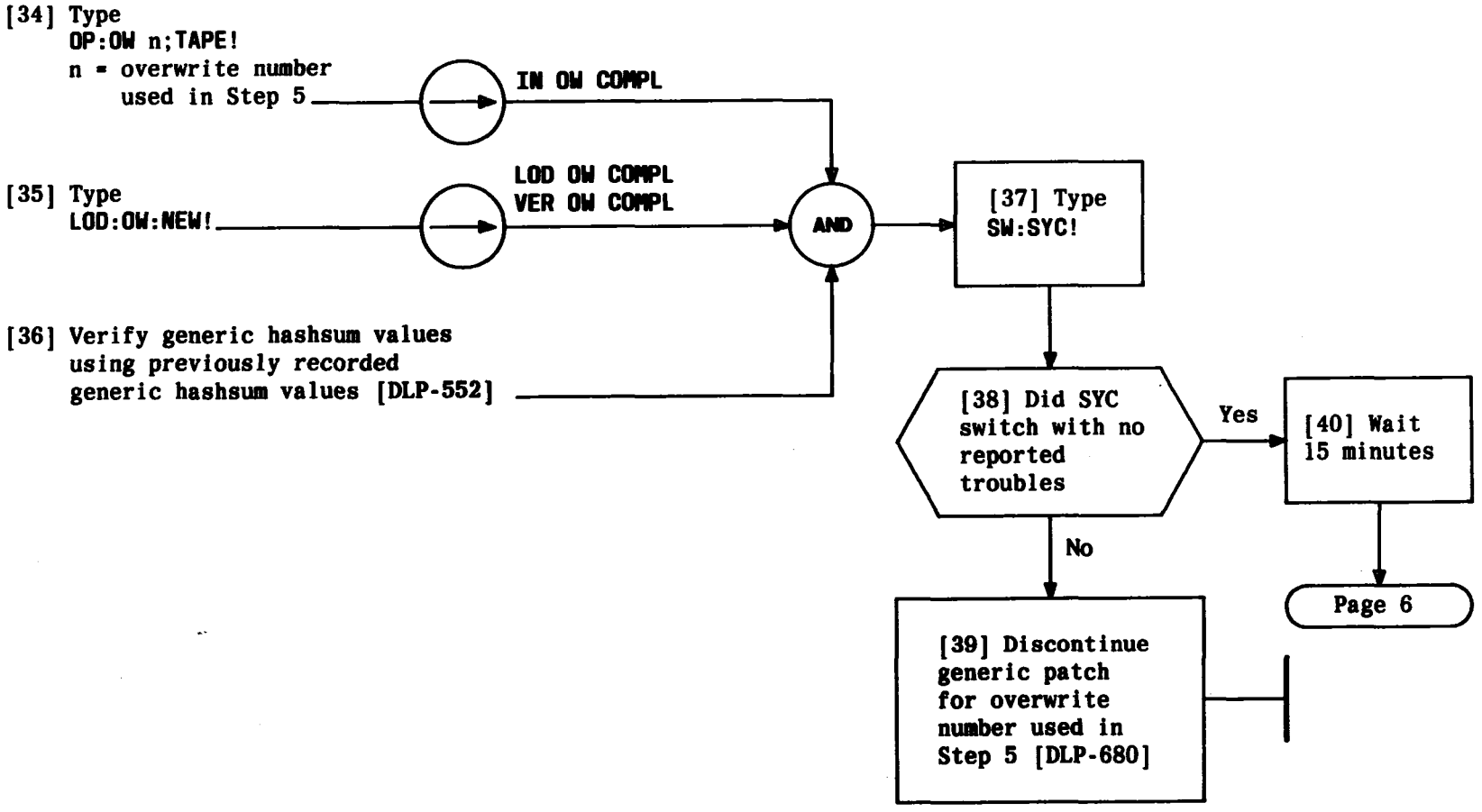

INSTALL GENERIC PATCH MANUALLY FOR OFFICES WITH 3E3 GENERIC OR LATER

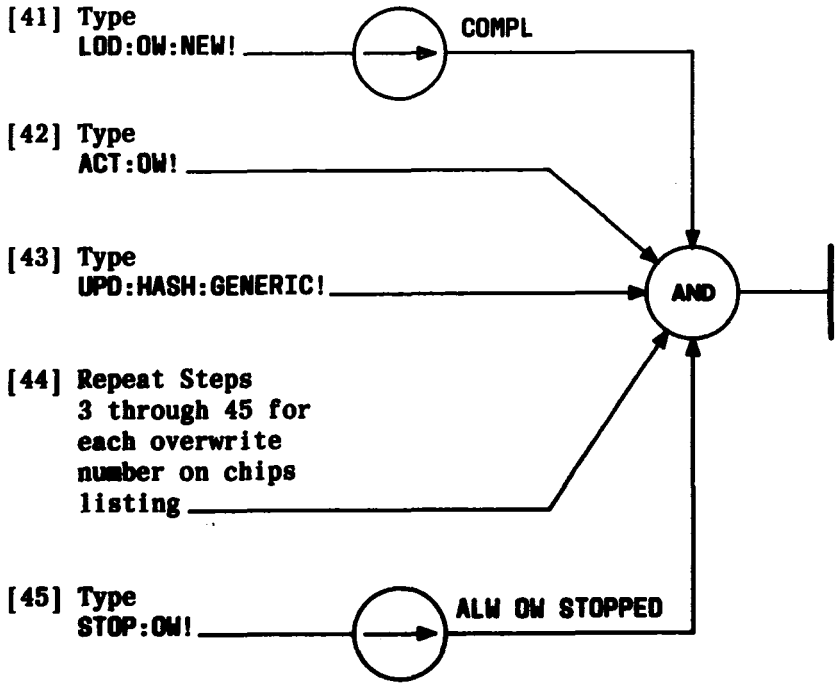

INSTALL GENERIC PATCH MANUALLY FOR OFFICES WITH 3E3 GENERIC OR LATER

At Maintenance TTY:

[1] Type
IN:OW n; TAPE!
n = number of overwrite
[NOTE 1]

[2] Type
VER:OW:NEW!

[3] Type
LOD:OW:OLD!

[4] Type
SW:SYC!

[5] Type
RMV:OW!

[6] Type
UPD:HASH:GENERIC!

[7] Type
STOP:OW!

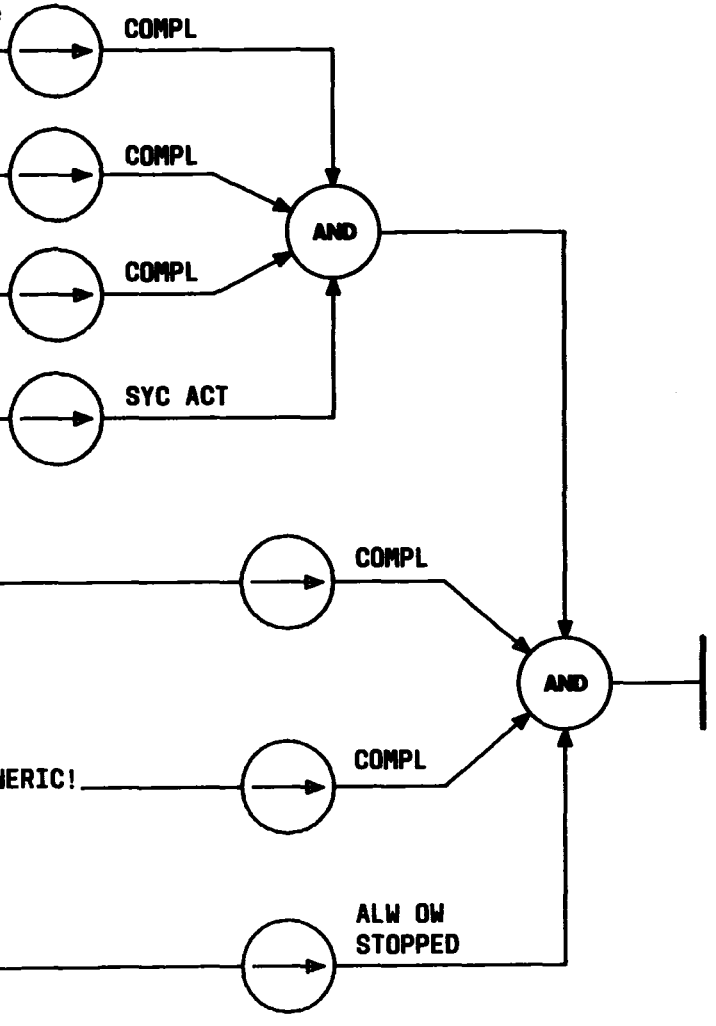

DISCONTINUE GENERIC PATCH BEFORE ACTIVATION
FOR OFFICES WITH 3E3 GENERIC OR LATER

NOTE 1
The number of the overwrite must be the number used in the attempted generic patch

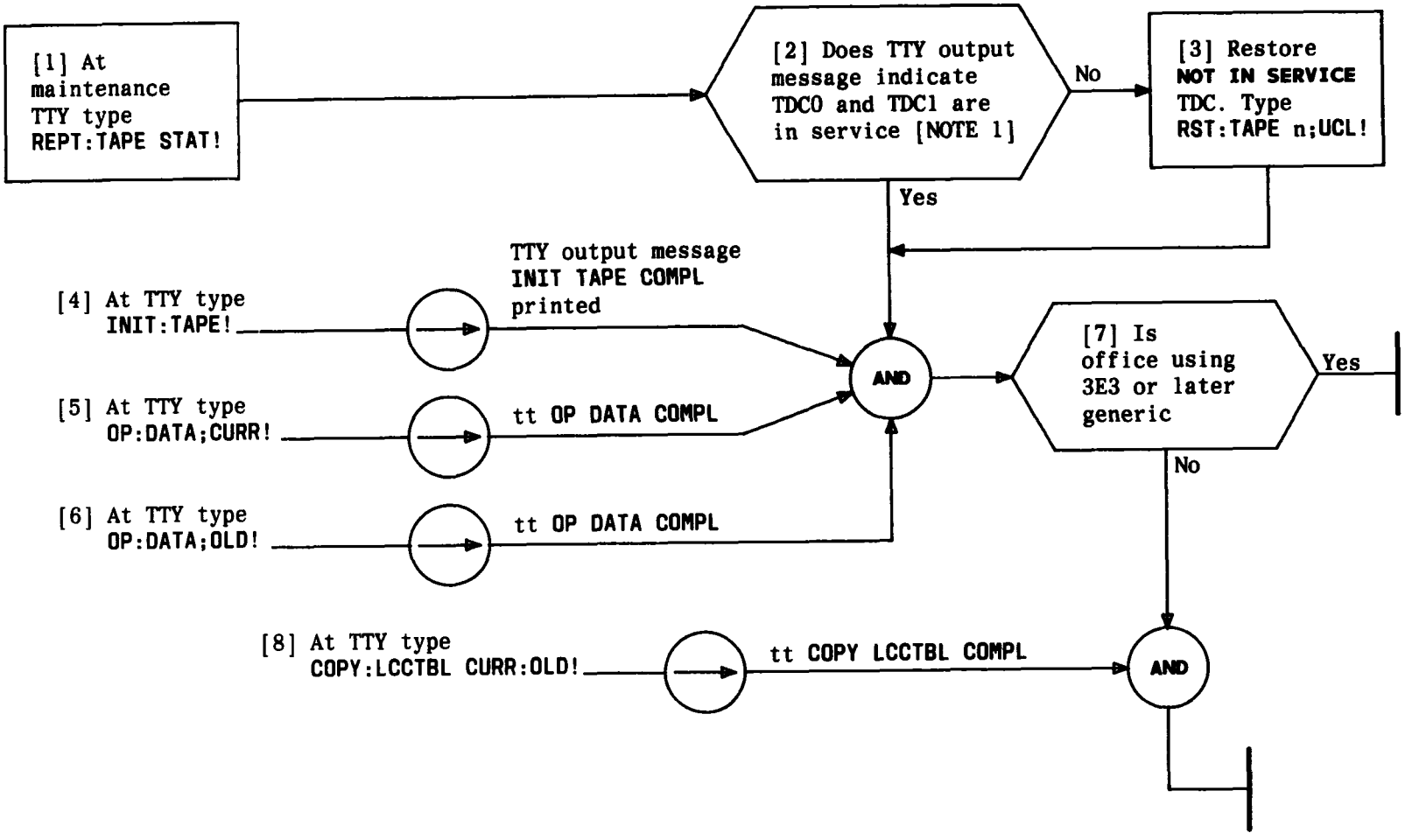

NOTE 1
Both tape units must be in service in order for update to complete successfully

Issue 3	AUG 1984
233-142-100	DLP
PAGE 1 of 1	681

UPDATE TRANSLATION FILES

[1] On rear panel, set **AC-BAT** to **AC**

[2] Connect power cord to **117V, 60 Hz** outlet

[3] Set **POWER** to **ON** [FIG. 1]

[4] Set **FUNCTION** to **DIAL BAT**

[5] Allow 5-minute warmup period

AND

[6] Does **BAT TEST** meter read within green arc

Yes → Page 2

No → [7] Check AC source, fuses, line cord

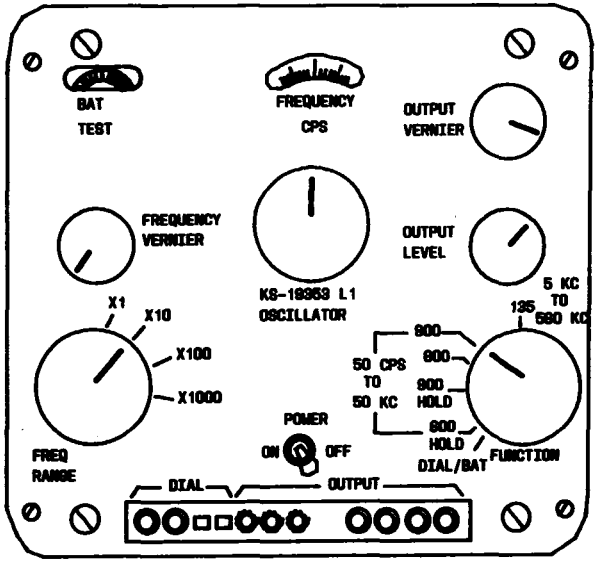

FIG. 1

CONDITION KS-19353L1 OSCILLATOR

Issue 3	AUG 1984
233-142-100	DLP
PAGE 1 of 2	682

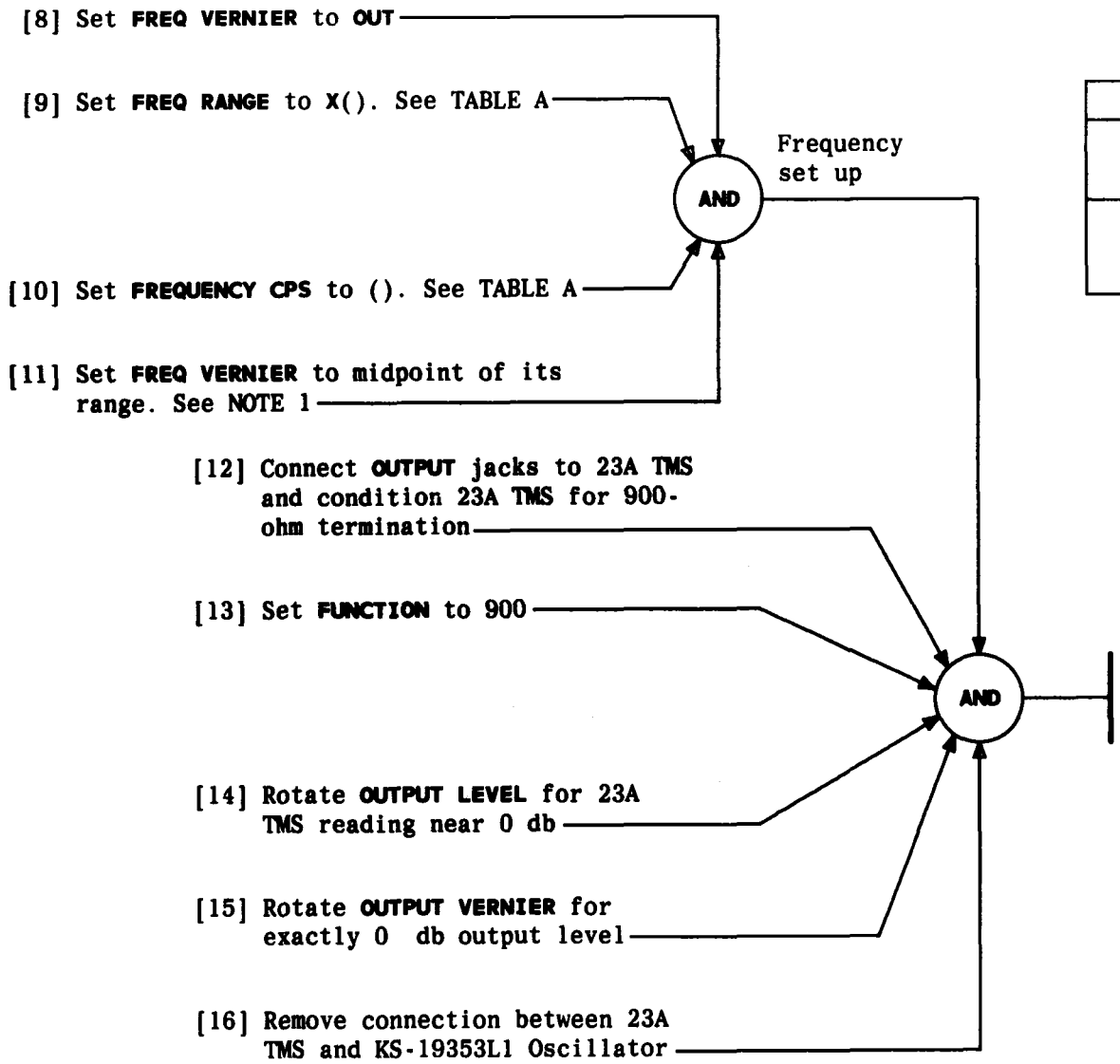

TABLE A		
FREQ	EXAMPLE OF CONTROL SETTINGS	
	FREQ RANGE	FREQ CPS
400 Hz	X10	40
1000 Hz	X10	100
2800 Hz	X10	280

NOTE 1

If a precise frequency is desired the oscillator can be connected to a frequency counter and **FREQ VERNIER** adjusted to an exact frequency

CONDITION KS-19353L1 OSCILLATOR

[1] Connect GRD terminal to a good frame ground

[2] With **FUNCTION** switch at **OFF** adjust meter **ZERO ADJUST** to base line (left end of scale) FIG. 1

[3] Insert weighting network for C message weighting

[4] Set **FUNCTION** switch to **BAT**

AND

[5] Does meter indicate a reading in the shaded area marked **BAT**

No

[6] Replace internal test set batteries and return to Step 2

Yes

[7] Set **DBRN** to **85**

[8] Set **FUNCTION** to **CAL**

[9] Adjust **CAL** for a meter indication on the red line

AND

3A test set calibrated

AND

[10] Set **DAMP-NORM** to **NORM.** See **NOTE 1**

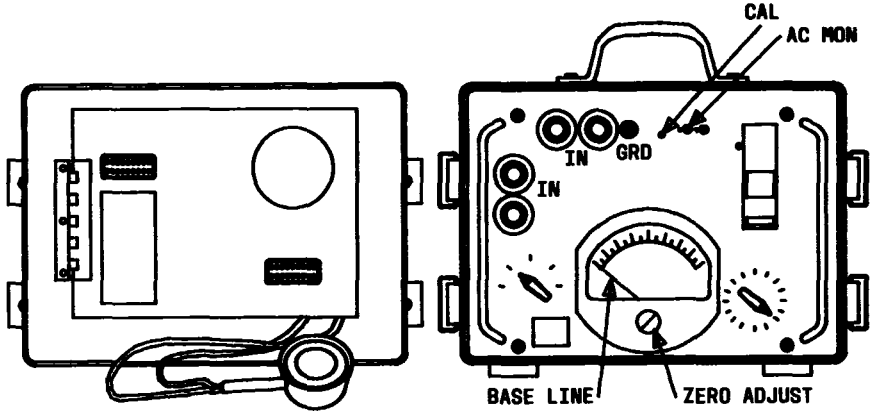

FIG. 1 – 3A Noise Measuring Set – Cover Removed

NOTE 1
When measuring rapidly fluctuating noise, the DAMP setting may be used. Read only the maximum of the most frequently occurring peaks in this position

SET UP 3A NOISE MEASURING SET

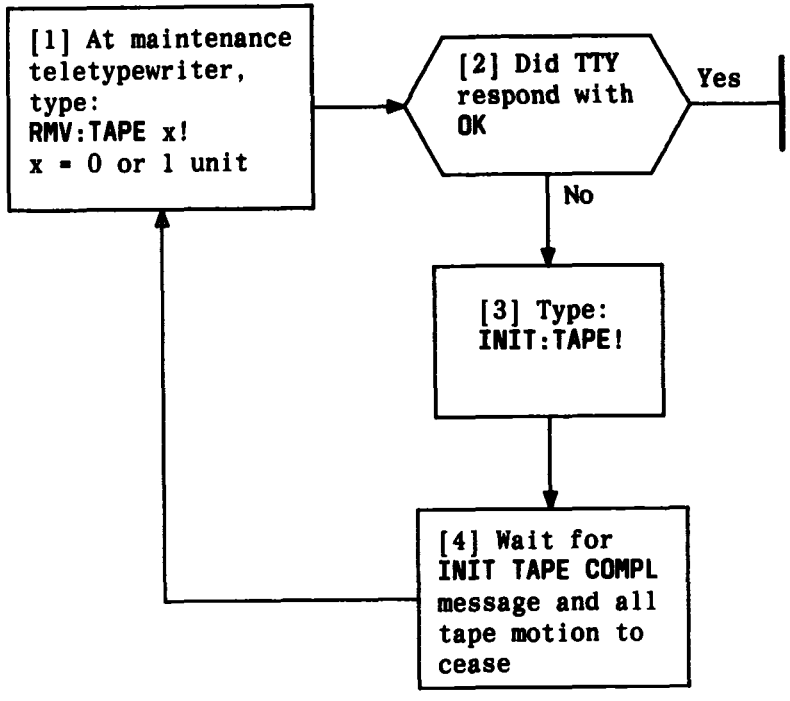

REMOVE CARTRIDGE TAPE TRANSPORT (MINIRECORDER) FROM SERVICE

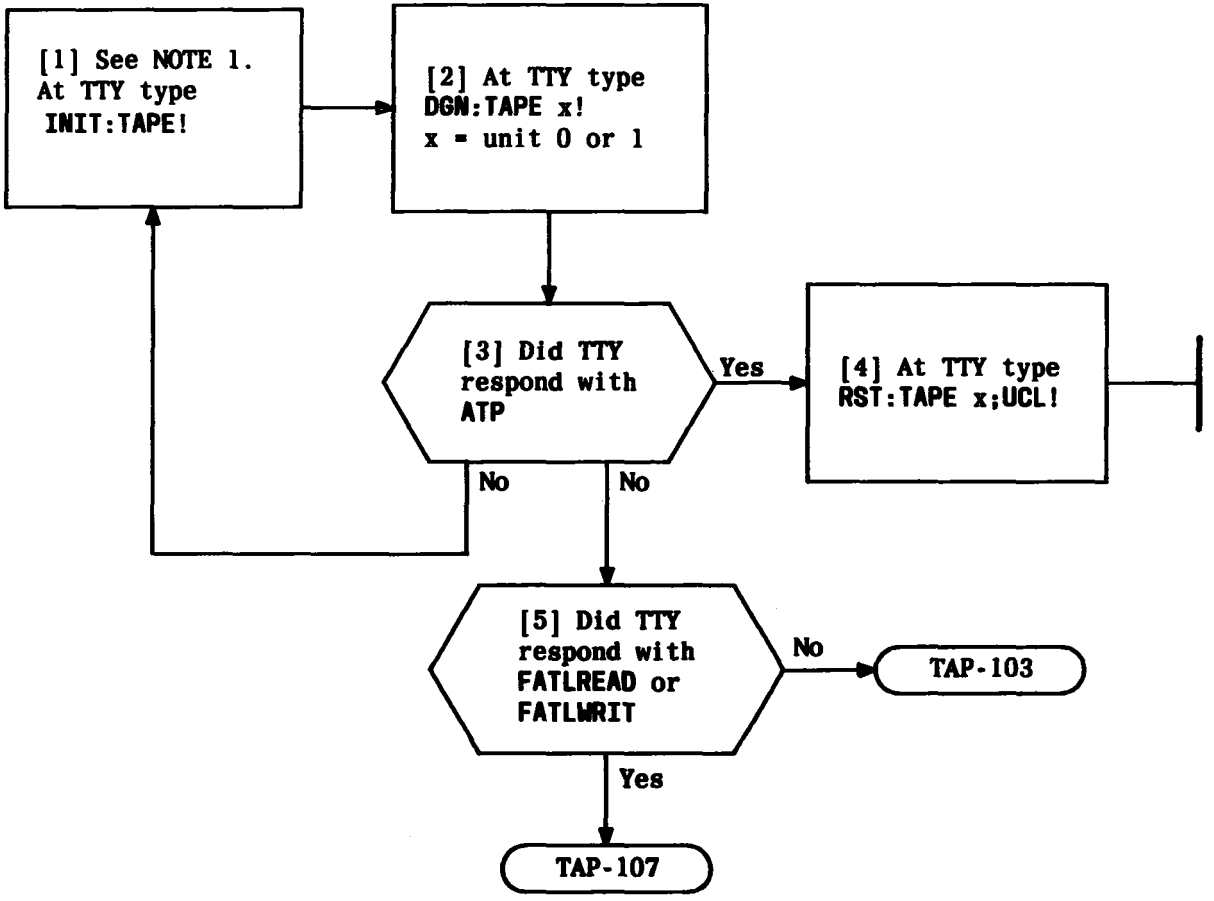

NOTE 1
This message is not necessary for offices with 3E3 generic or later. Tape initiation is run automatically during tape diagnostics

PERFORM TAPE DIAGNOSTICS

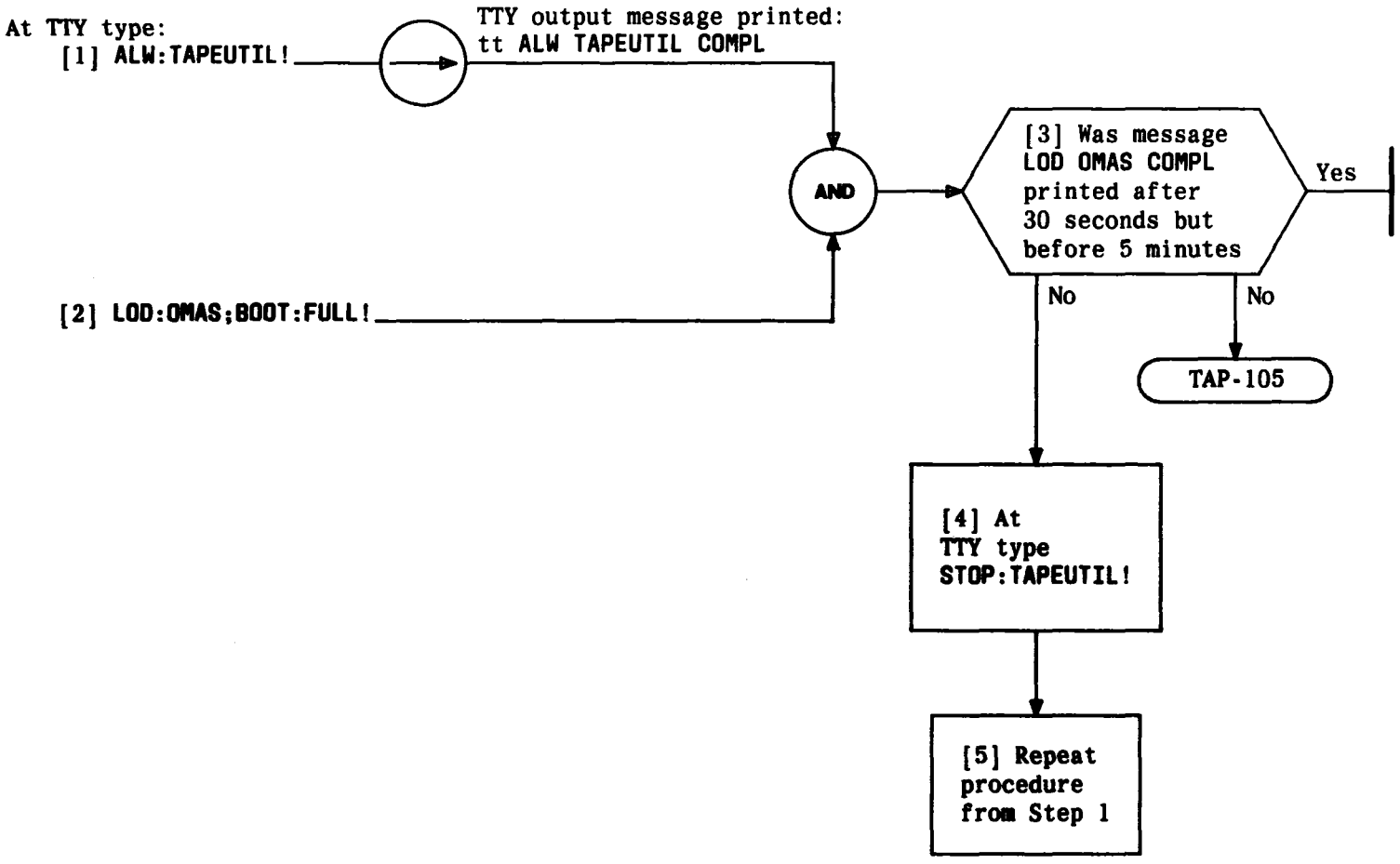

PERFORM OFF-LINE BOOTSTRAP

[1] If cleaning equipment has not been obtained, procure equipment per TABLE A

[2] Read CAUTION 1

[3] Lightly moisten cloth with cleaning solvent

[4] Carefully clean head and baseplate assembly, drive capstan (while spinning), and cartridge sensor microswitches [FIG. 1] [NOTE 1]

[5] Wipe head and baseplate assembly clean with a dry cloth

[6] Using vacuum cleaner, remove all loose dust on, around, and inside recorder

AND

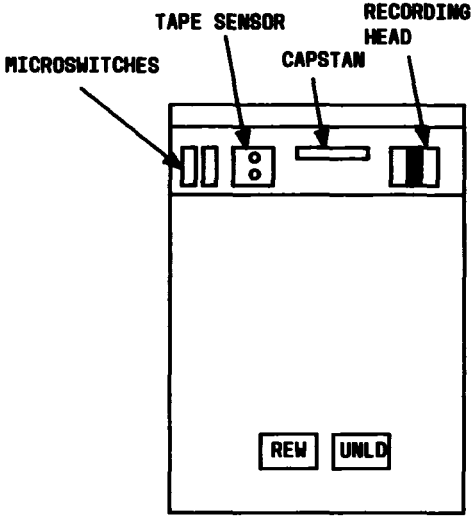

FIG. 1

TABLE A	
EQUIPMENT REQUIRED	RECOMMENDED TYPE
Cloth	KS-2423
Cleaning solvent	94% [or 91%] Isopropyl Alcohol TEXPAD – manufactured by Texwipe, Hillsdale, N.J. 07642 will eliminate the need of the cloth and solvent
Vacuum cleaner	KS-14377, L5

NOTE 1
Lightly depressing the cartridge sensor microswitch will spin the capstan. On CTT units with two microswitches, depress the right microswitch

CAUTION 1
Contamination may occur on drive capstan, EOT/BOT sensors, light window, cartridge sensor microswitches, or magnetic tape if touched with bare hands during CTT cleaning

CLEAN THE CTT (MINIRECORDER) HEAD ASSEMBLY AND CHASSIS

[1] Read CAUTION 1

[2] Visually inspect recording surface for pitting, tarnishing, or wear. See FIG. 1

AND

[3] Does head show signs of excessive wear, tarnishing, and/or pitting

No

[6] Using orange stick, check capstan for loose fit on shaft

Page 2

Yes

[4] Replace cartridge tape transport [DLP-703]

[5] Go to Page 2, Step 9

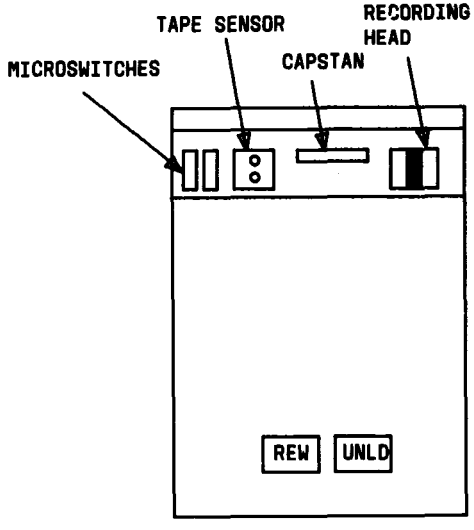

FIG. 1

CAUTION 1
Touching the recording tape and recording head with hands or sharp instruments may cause equipment damage

Issue 3	AUG 1984
233-142-100	DLP
PAGE 1 of 2	688

INSPECT CARTRIDGE TAPE TRANSPORT (MINIRECORDER) FOR WEAR

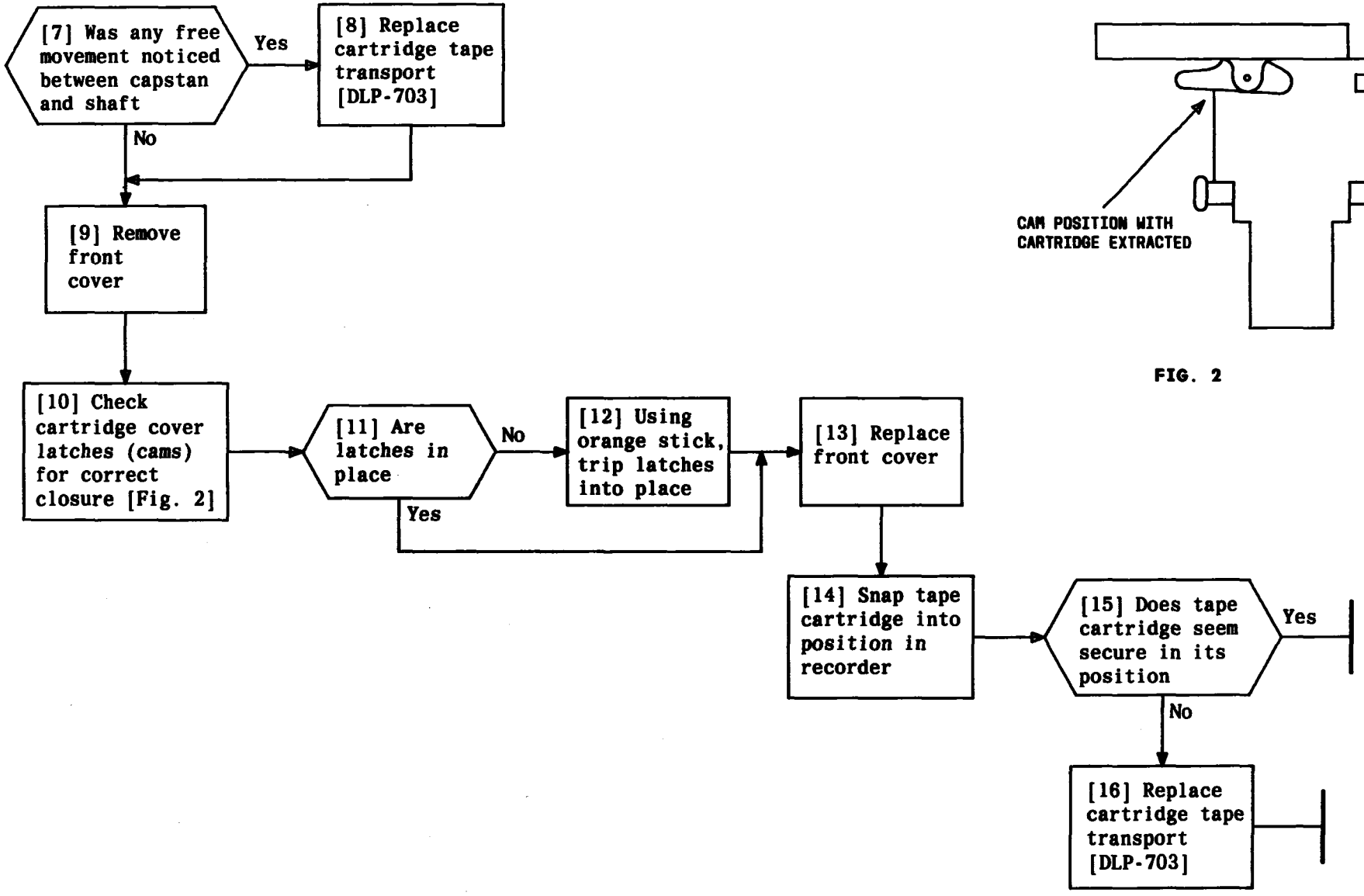

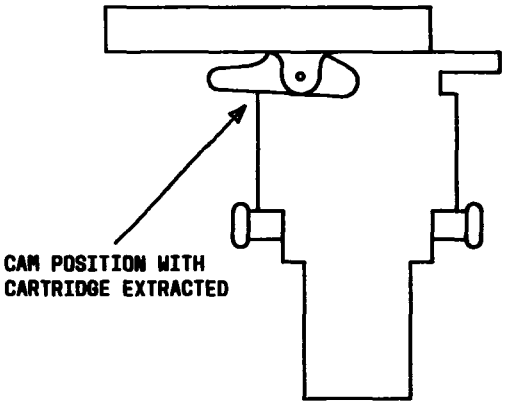

FIG. 2

INSPECT CARTRIDGE TAPE TRANSPORT (MINIRECORDER) FOR WEAR

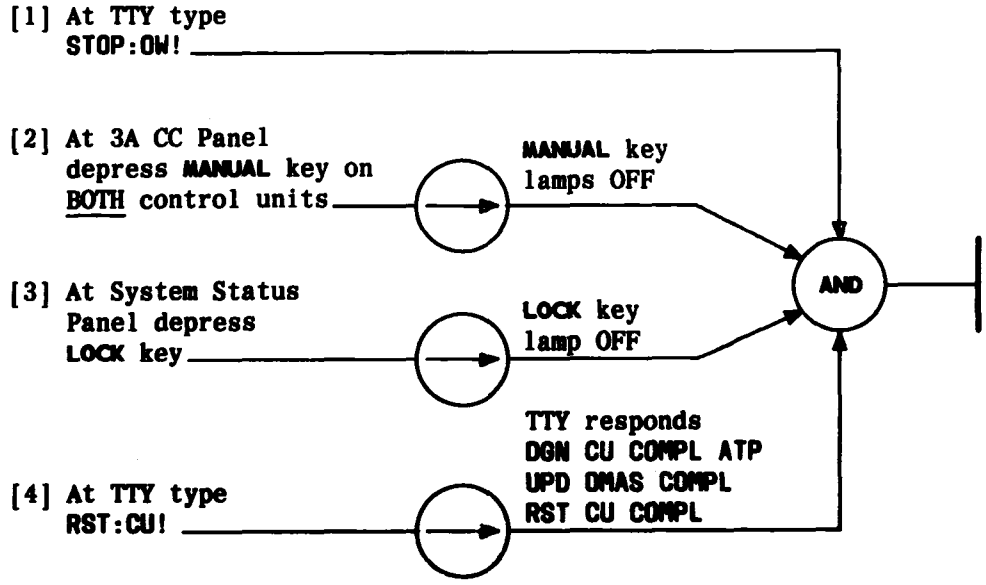

PERFORM POST OFF-LINE BOOTSTRAP

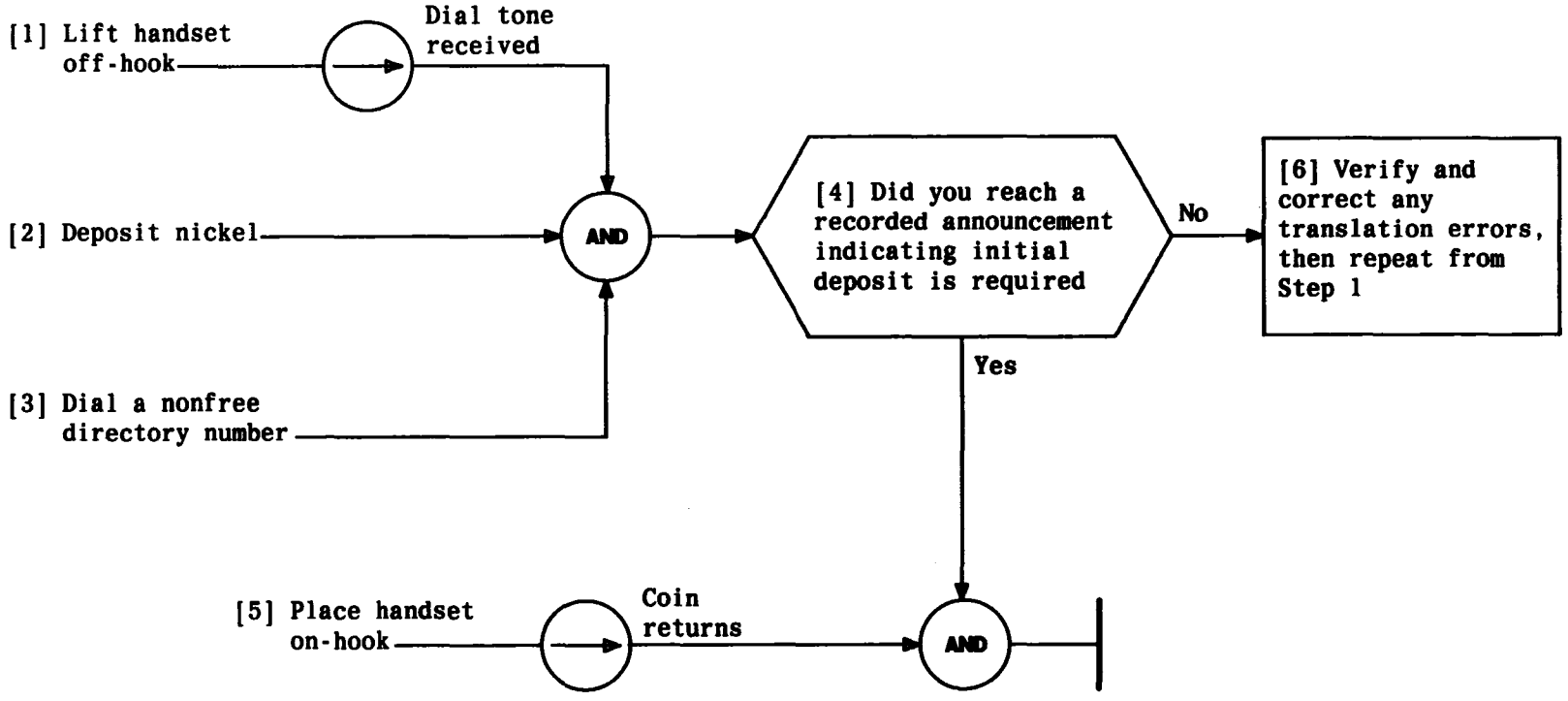

CHECK RECORDED ANNOUNCEMENT FOR PARTIAL DEPOSIT

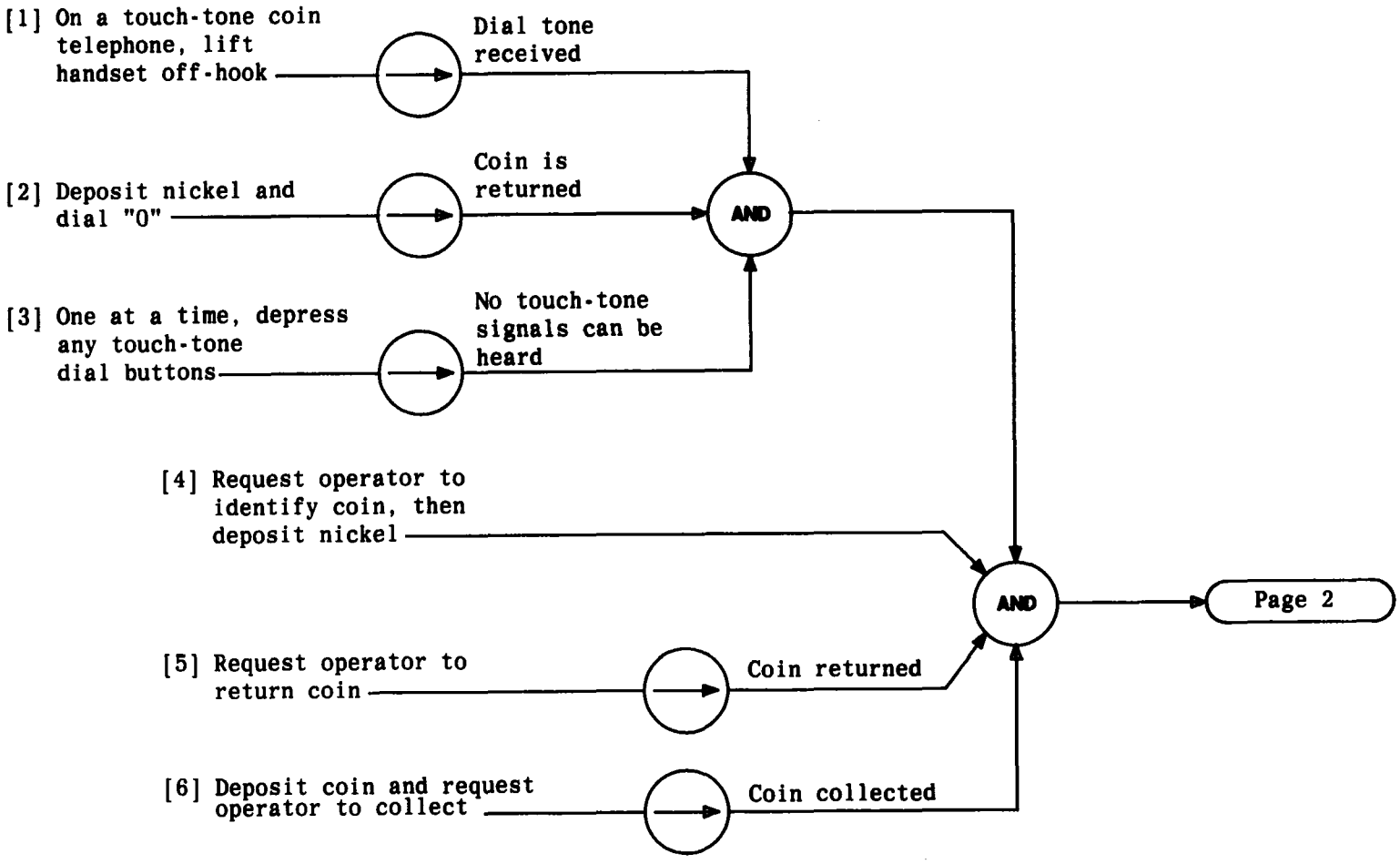

Issue 3	AUG 1984
233-142-100	DLP
PAGE 1 of 2	691

MAKE LOCAL DIAL-TONE-FIRST OPERATIONAL TESTS WITH OPERATOR

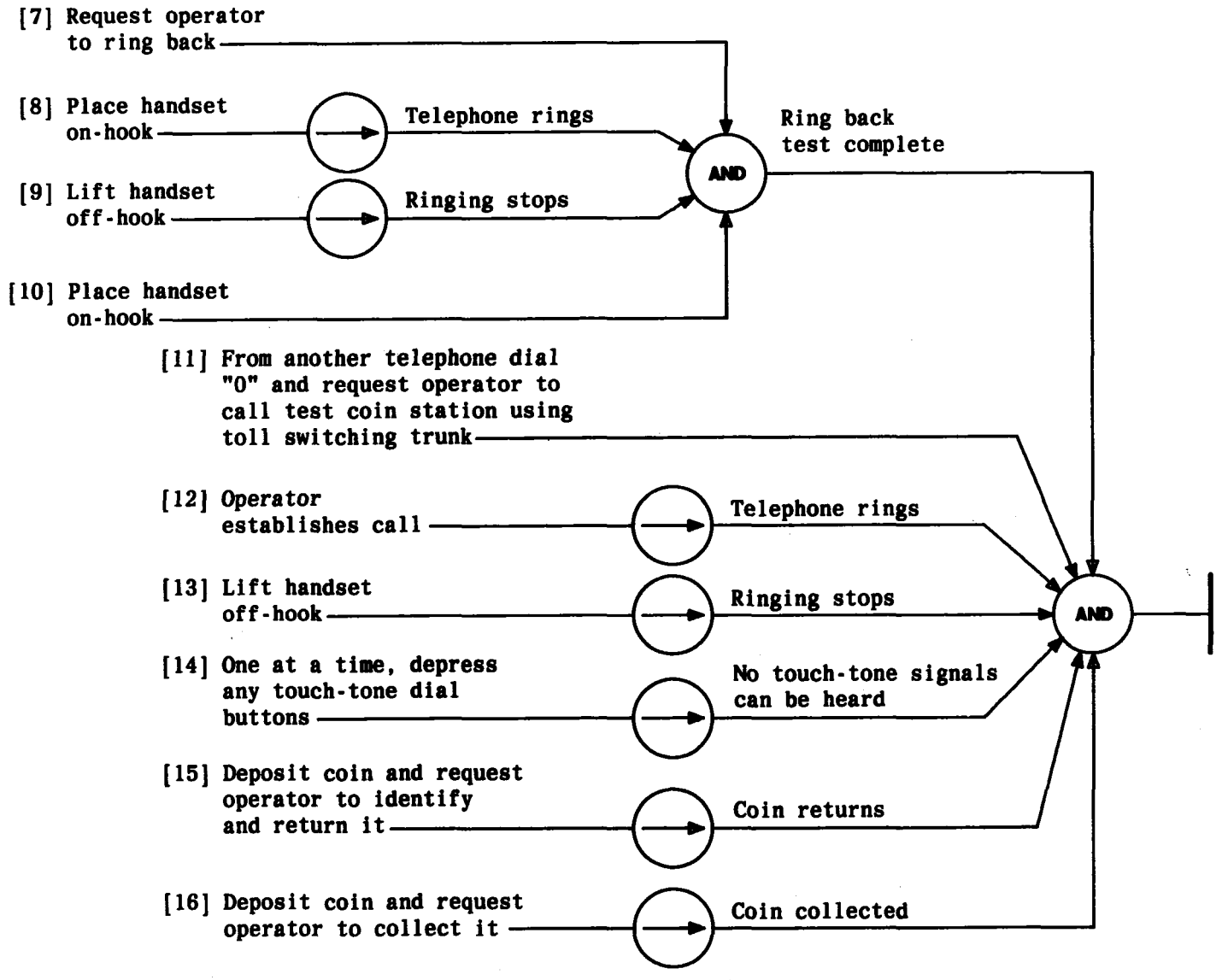

MAKE LOCAL DIAL-TONE-FIRST OPERATIONAL TESTS WITH OPERATOR

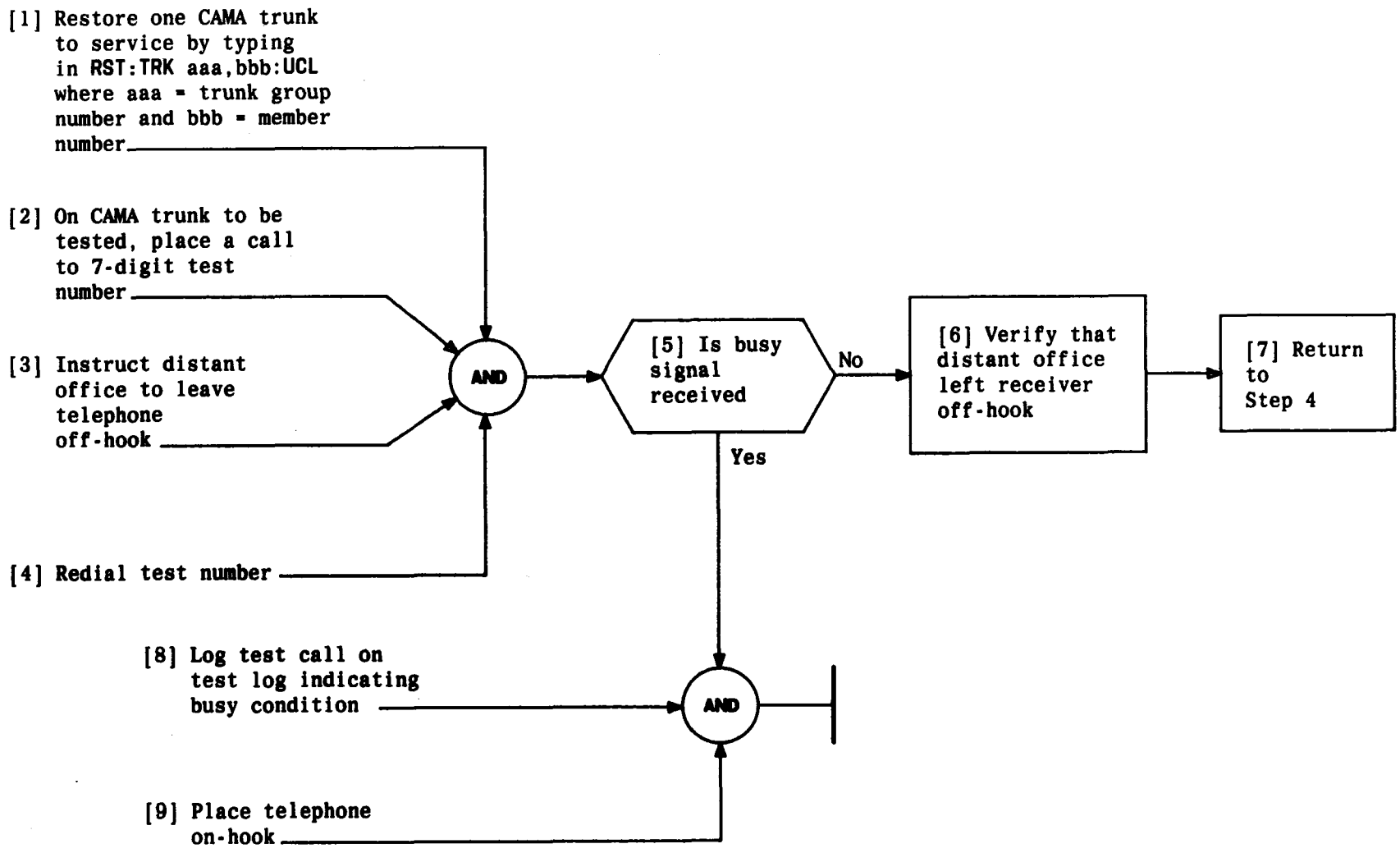

MAKE TEST CALL TO A BUSY NUMBER

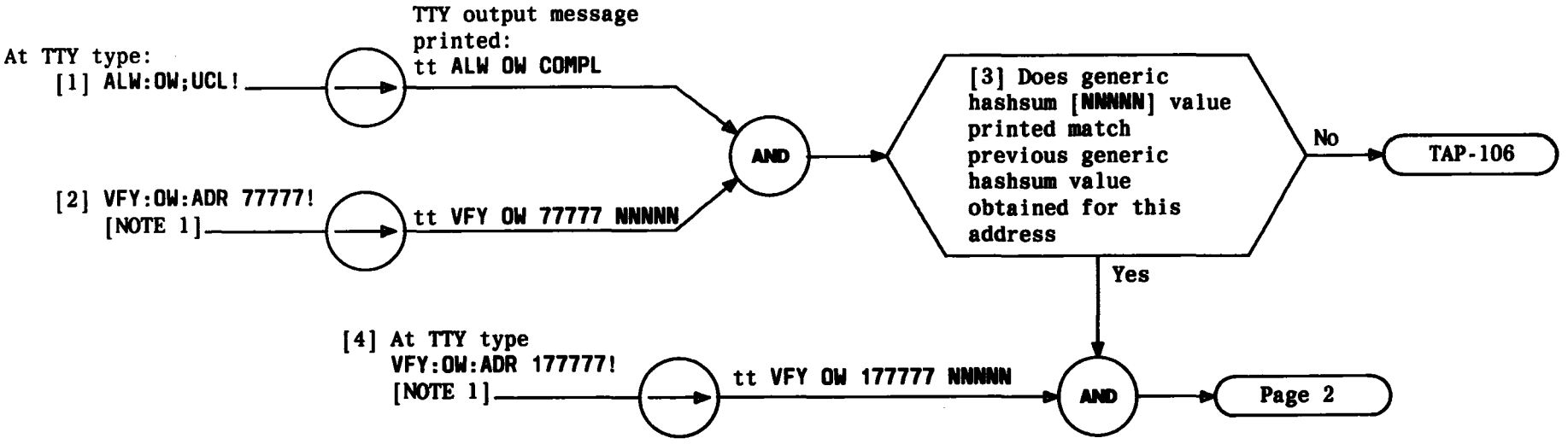

NOTE 1 NNNNN is the hashsum value in decimal	
Issue 3	AUG 1984
233-142-100	DLP
PAGE 1 of 2	693

VERIFY GENERIC HASHSUMS USING PREVIOUS HASHSUM VALUES (SO-2 GENERIC)

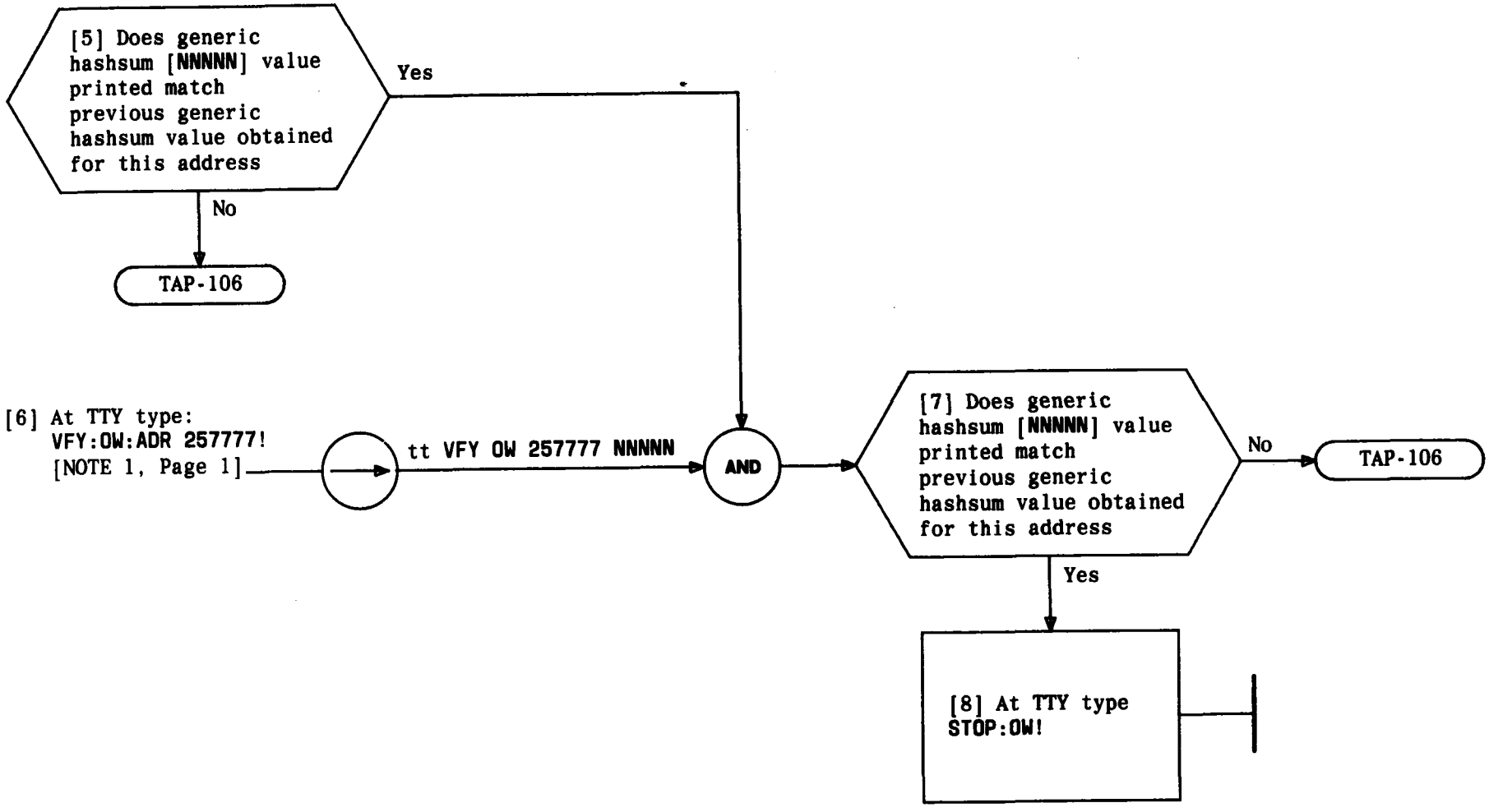

VERIFY GENERIC HASHSUMS USING PREVIOUS HASHSUM VALUES (SO-2 GENERIC)

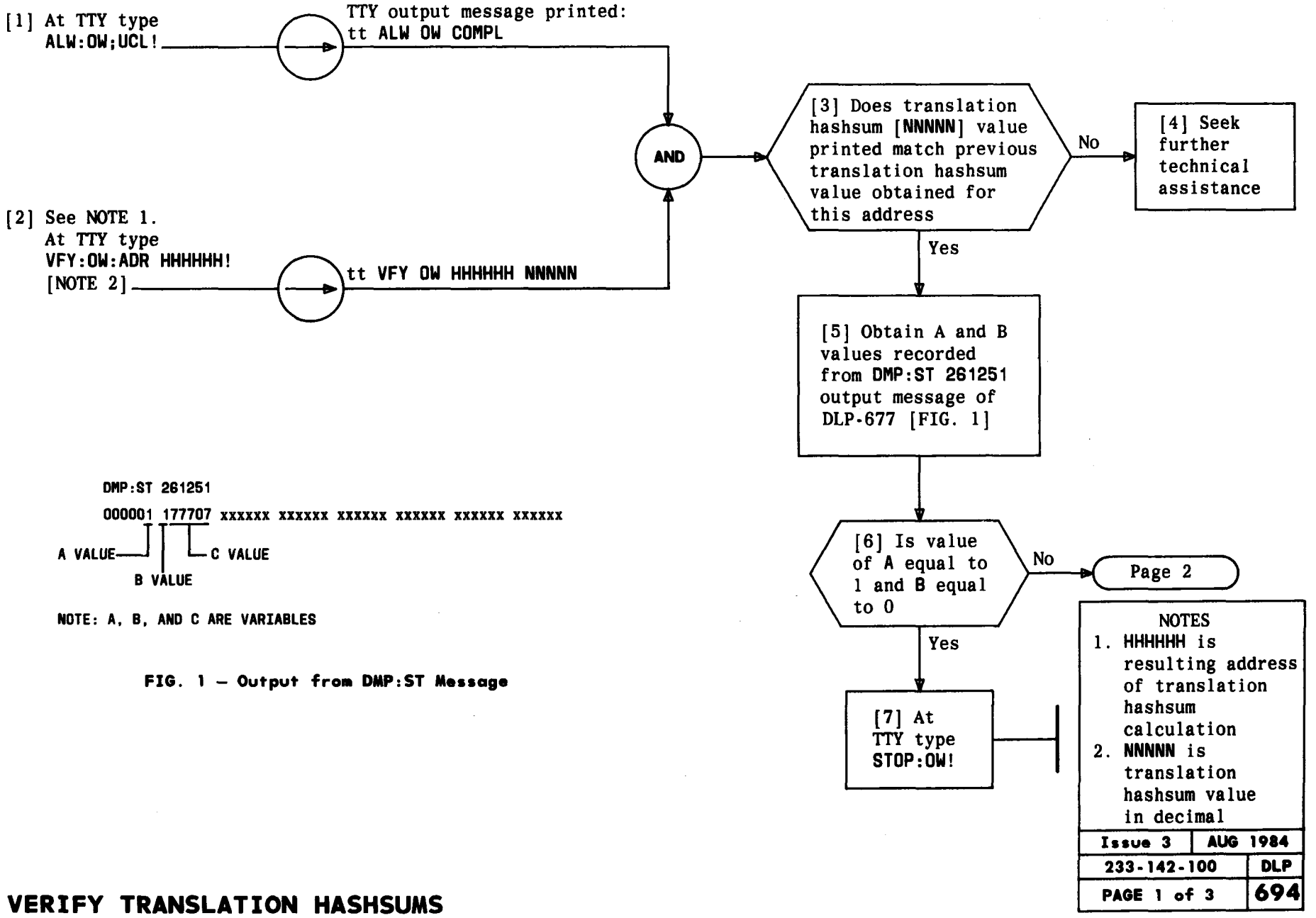

FIG. 1 – Output from DMP:ST Message

VERIFY TRANSLATION HASHSUMS

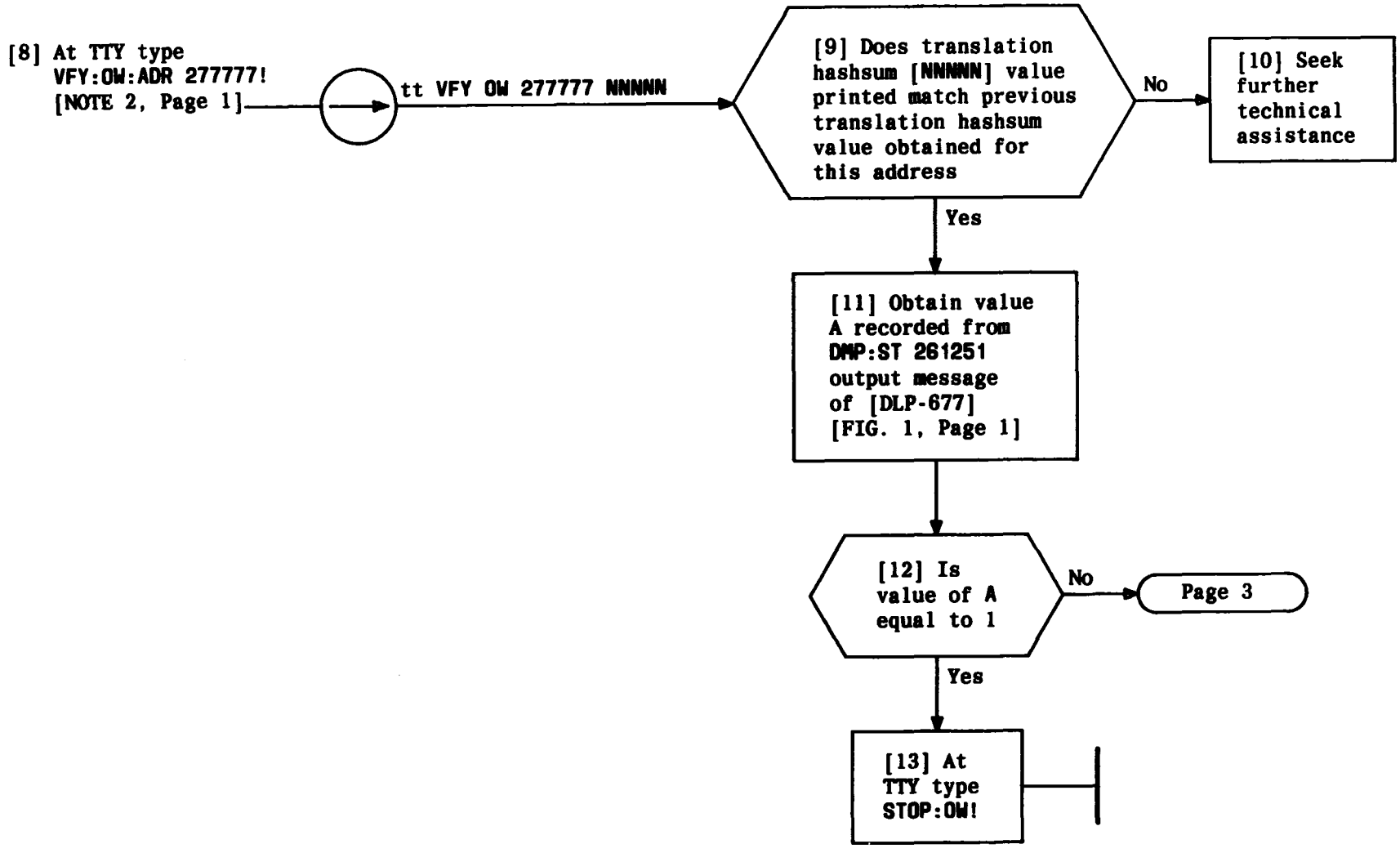

VERIFY TRANSLATION HASHSUMS

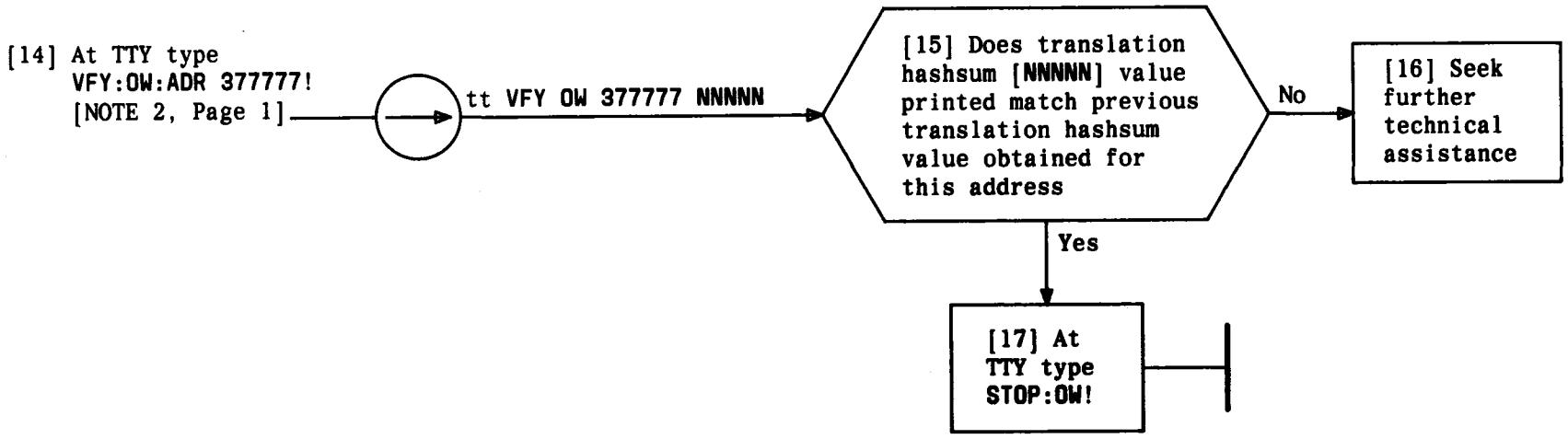

VERIFY TRANSLATION HASHSUMS

[1] At cartridge tape transport (minirecorder) depress **REW** [FIG. 1]

[2] Wait for tape motion to cease

[3] Depress **UNLD**

[4] Wait for tape motion to cease

[5] Remove tape cartridge from cartridge tape transport

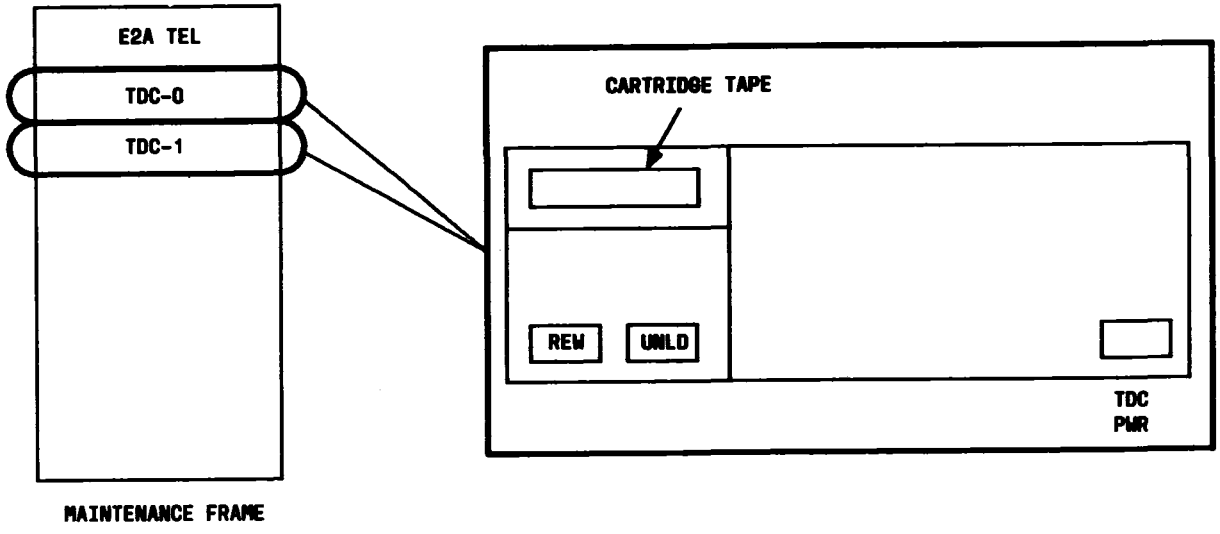

FIG. 1

Issue 3	AUG 1984
233-142-100	DLP
PAGE 1 of 1	695

REMOVE CARTRIDGE FROM CARTRIDGE TAPE TRANSPORT (MINIRECORDER)

[1] Obtain trunk group and member number used to install office-to-office trunk circuit prior to starting tests

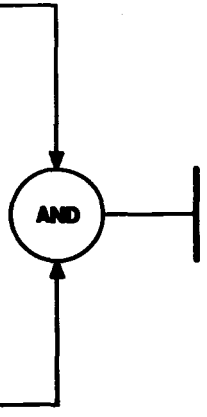

[2] See TABLE A.
On MC TTY type
RC:CKT/
TYP OUT/
GRP nnn/
TER ooo/
END!

TABLE A	
VARIABLE	DEFINITION
nnn	Trunk Group Number
ooo	Member Number

REMOVE OFFICE-TO-OFFICE TRUNK CIRCUIT

SUMMARY

Place a 1370-ohm resistor in series with the ring side of a ground start line. With an osilloscope, measure the ac longitudinal voltage interference across the resistor. If the measured interference exceeds 7.5 volts peak, or 15.08 volts peak-to-peak, install a noise immunity line circuit SD-3H208-01 to prevent possible false line originations.

[1] Set scope to measure 20 volts peak-to-peak

[2] Connect scope per FIG. 1

[3] Connect scope ground clip to CDF frame ground

[4] Measure voltage from point A to ground. See FIG. 1

[5] Measure voltage from point B to ground. See FIG. 2

AND → Page 2

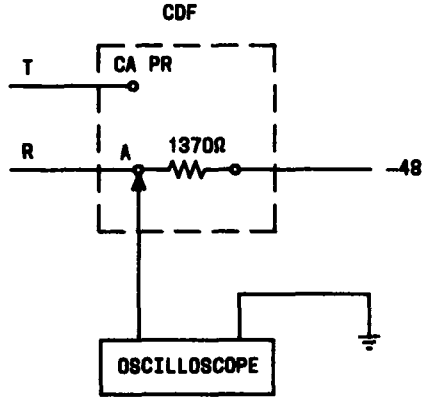

FIG. 1

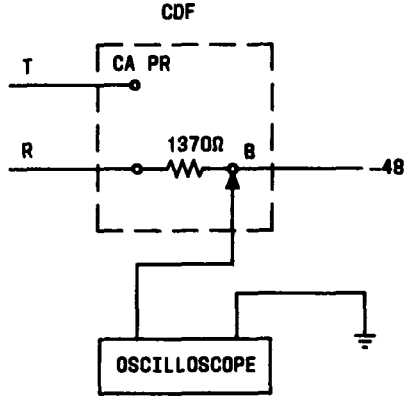

FIG. 2

MEASURE LONGITUDINAL VOLTAGE USING OSCILLOSCOPE

[6] Is difference between voltages at points A and B less than 15.08 volts peak-to-peak [NOTE 1]

Yes

No

[7] Install a noise immunity line circuit (SD-3H208-01) between cable pair and OE on CDF [FIG. 3]

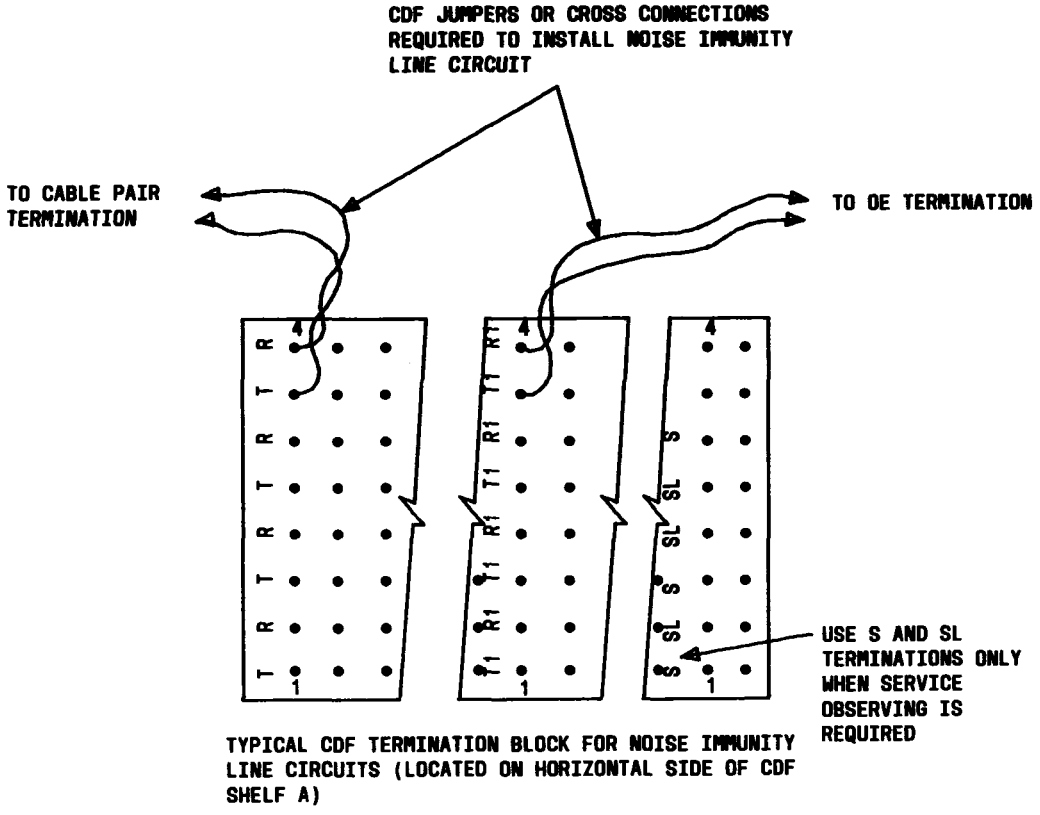

TYPICAL CDF TERMINATION BLOCK FOR NOISE IMMUNITY LINE CIRCUITS (LOCATED ON HORIZONTAL SIDE OF CDF SHELF A)

FIG. 3

NOTE 1
AC longitudinal voltage interference may vary widely throughout the day as well as from season to season. It is recommended to multiply the voltage reading by 2 unless interference is known to be at its maximum

MEASURE LONGITUDINAL VOLTAGE USING OSCILLOSCOPE

SUMMARY	
Place a 1370-ohm resistor in series with the ring side of a ground start line. With a digital multimeter, measure the ac longitudinal voltage interference across the resistor.	If the measured interference exceeds 5.319V rms, install a noise immunity line circuit (SD-3H208-01) to prevent possible false line originations.

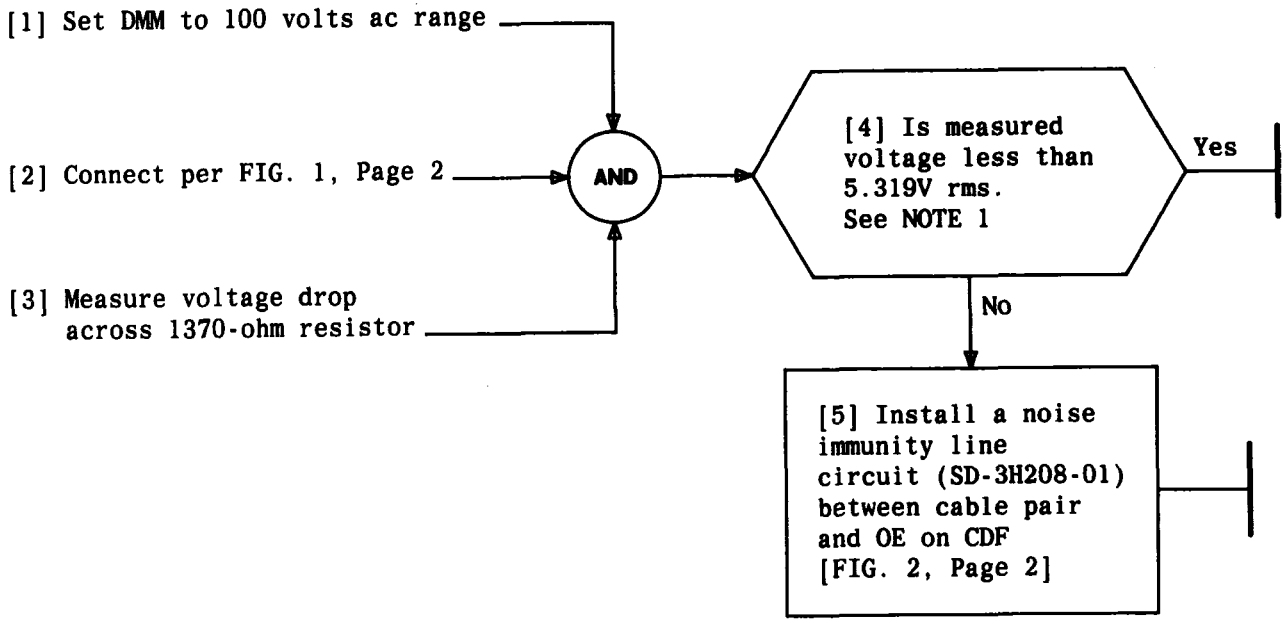

NOTE 1
AC longitudinal voltage interference may vary widely throughout the day as well as from season to season. It is recommended to multiply the voltage reading by 2 unless interference is known to be at its maximum

MEASURE LONGITUDINAL VOLTAGE USING DIGITAL MULTIMETER

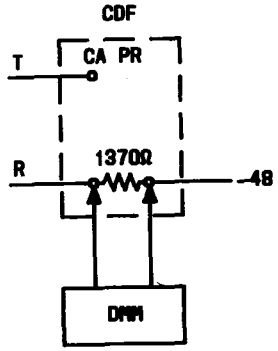

FIG. 1

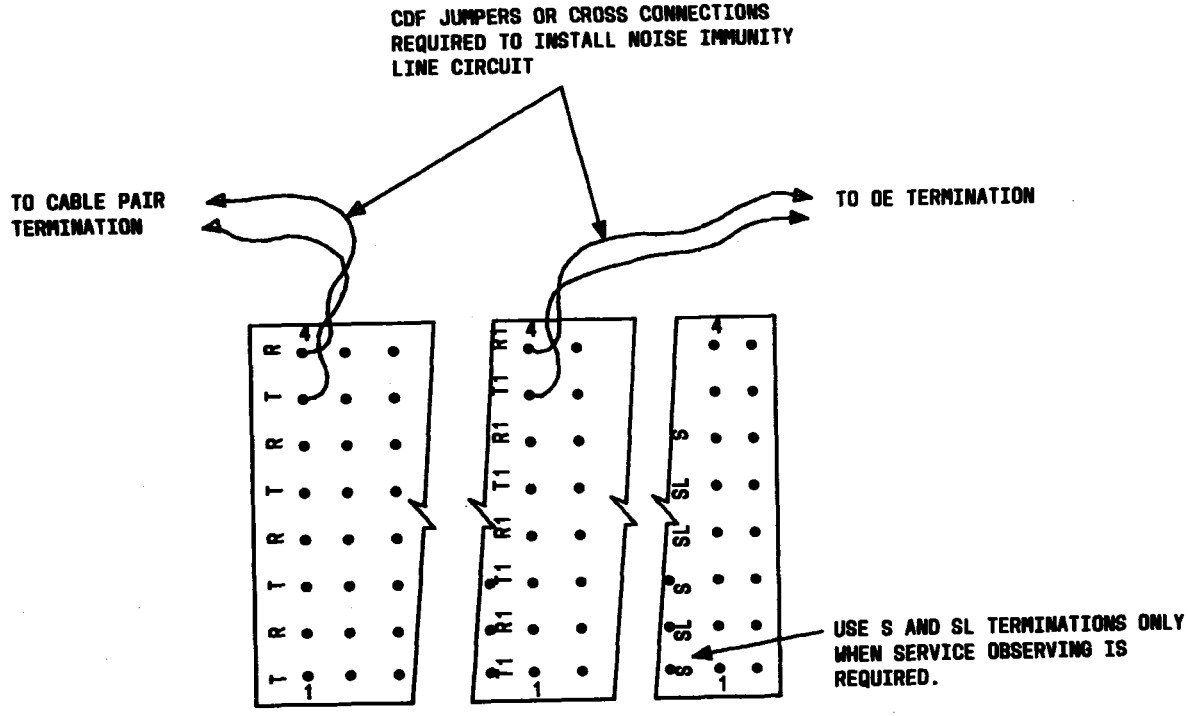

FIG. 2

MEASURE LONGITUDINAL VOLTAGE USING DIGITAL MULTIMETER

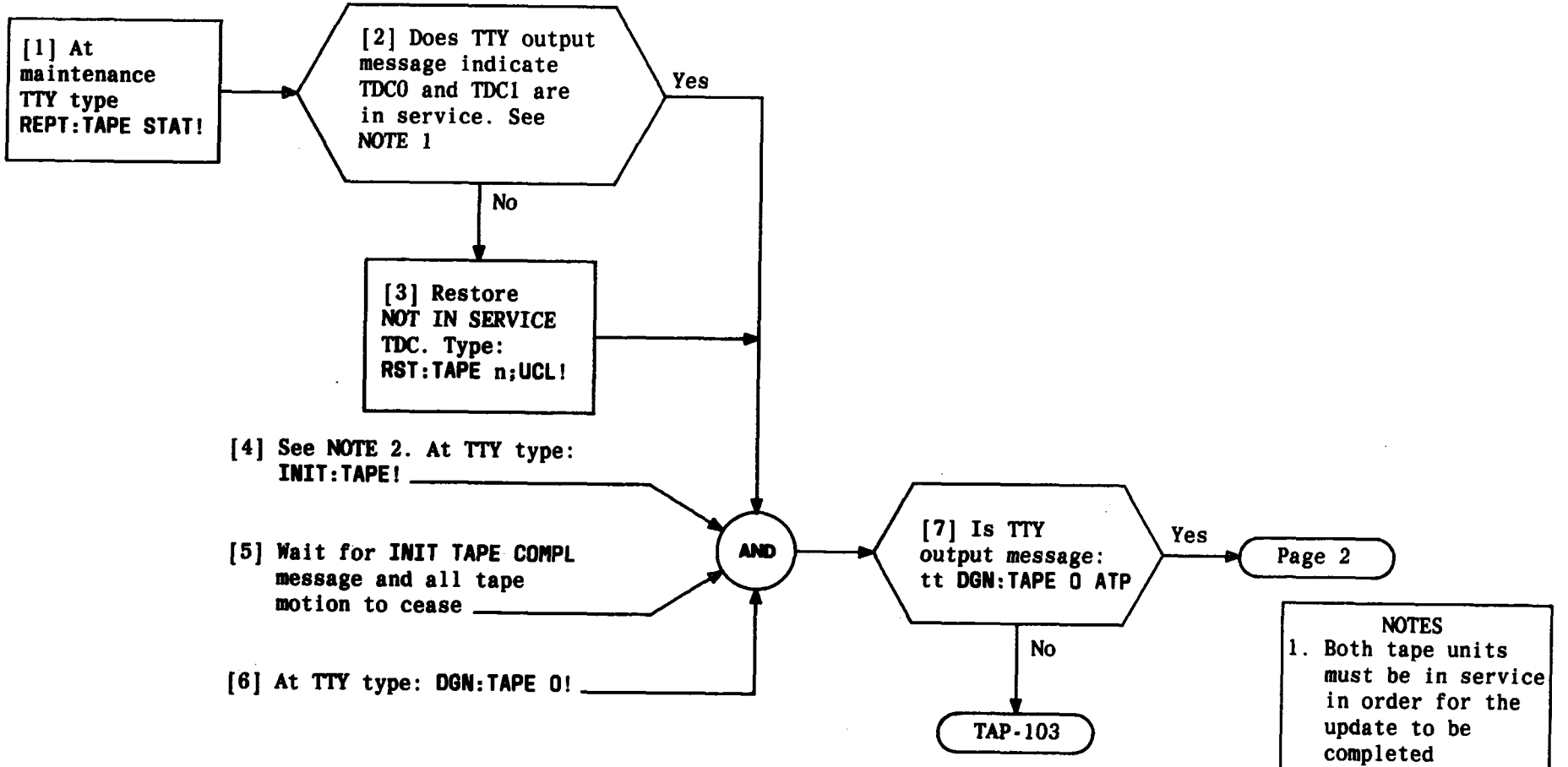

NOTES
1. Both tape units must be in service in order for the update to be completed successfully
2. This message is not necessary for offices with 3E3 generic or later. Tape initiation is run automatically during tape diagnostics

UPDATE TAPE COPIES OF TRANSLATIONS

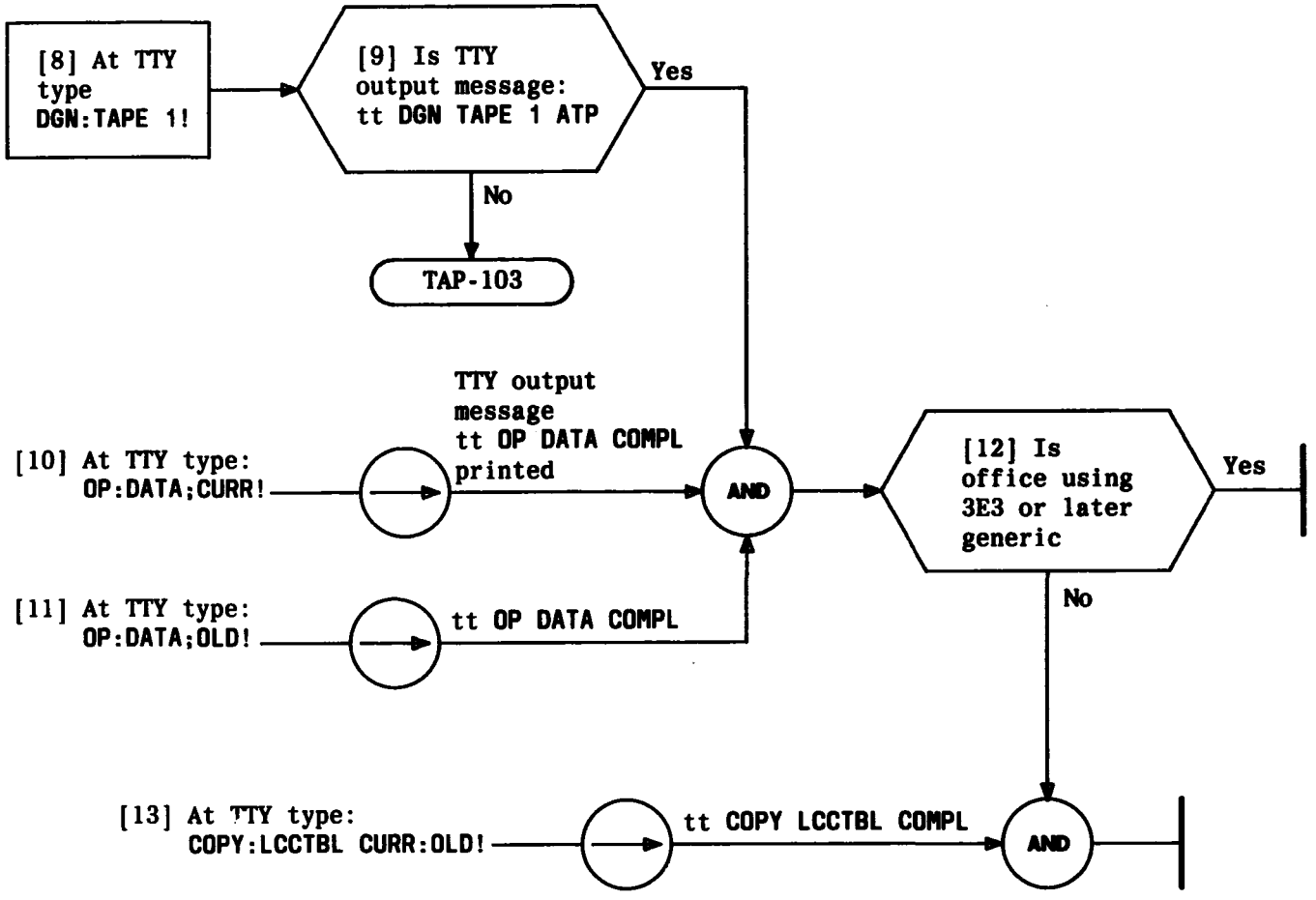

UPDATE TAPE COPIES OF TRANSLATIONS

TABLE A
TRANSLATORS AND ASSOCIATED REALLOCATION AND VERIFICATION MESSAGES

TRANSLATOR	REALLOCATION MESSAGE	REALLOCATION VARIABLE DEFINITION	SO-2 VERIFICATION MESSAGE	3E3 VERIFICATION MESSAGE
AMA Buffer	DIST:AMA nnnn! or DIST:AMA:RMV!	nnnn = Number of words an AMA buffer contains (1 – 4096)		
Country Access Code	DIST:CAC nn!	nn = Number of CAC Tables (0 – 63)		OP:OFR/CAC ALL/END!
Autoconnect Call Back*	DIST:CALLBK nn! or DIST:CALLBK;RMV!	nn = Number of autoconnect callback entries (0 – 63)		
Code Index	DIST:CDI nnn! or DIST:CDI;RMV!	nnn = Number of code index entries (0 – 255)	VER:CDI	OP:OFR/CDI ALL/END!
Call Forwarding	DIST:CF nnnn! or DIST:CF;RMV!	nnnn = Number of CF entries (1 – 4096)	VER:CFN	VER:CFN
Coin Triplet	DIST:CNTRIP nnnn! or DIST:CNTRIP;RMV!	nnnn = Number of coin triplet entries (1–1024)	VER:LINE	VER:LINE
Two-Word Code List Expansion Blocks*	DIST:COD2 nnnn! or DIST:COD2;RMV!	nnnn = Number of two-word code list expansion blocks (1 – 4096)		
Local and Foreign Area	DIST:DIG a! or DIST:DIG a sss! or DIST:DIG a;RMV!	a = Local area (0), Foreign area (1,2,3) sss = Number of nxx code entries (1 – 128)	VER:DIG	OP:OFR/DIG ALL/END!
One-Word Expansion	DIST:EXP1 nnnn! or DIST:EXP1;RMV!	nnnn = Number of one-word expansion blocks (1 – 4096)		
Two-Word Expansion	DIST:EXP2 nnnn! or DIST:EXP2;RMV!	nnnn = Number of two-word expansion blocks (1 – 4096)		
Four-Word Expansion	DIST:EXP4 nnnn! or DIST:EXP;RMV!	nnnn = Number of four-word expansion blocks (1 – 4096)		
Eight-Word Expansion*	DIST:EXP8 nnnn! or DIST:EXP8; RMV!	nnnn = Number of eight-word expansion blocks (1 – 4096)		

* 3E3 Generic Only

TABLE A (Contd)
TRANSLATORS AND ASSOCIATED REALLOCATION AND VERIFICATION MESSAGES

TRANSLATOR	REALLOCATION MESSAGE	REALLOCATION VARIABLE DEFINITION	SO-2 VERIFICATION MESSAGE	3E3 VERIFICATION MESSAGE
Multiline Hunting, Service Circuit, or Trunk Groups	DIST:GRP ggg! or DIST:GRP:ggg ttt! or DIST:GRP ggg;RMV!	ggg = Group number (0 – 255) ttt = Largest terminal number 0 - 63 for MLHG and 0 – 126 for trunk and service circuit groups	VER:GRP	OP:OFR/GRP ALL/END!
Line Class Code*	DIST:LCC nnn! or DIST:LCC; RMV!	nnn = Number of line class code entries (0 – 255)	–	OP:OFR/LCC ALL/END!
Message Register	DIST:MR nnnn! or DIST:MR;RMY!	nnnn = Number of message registers (1 – 4096)	VER:LINE	VER:LINE
Number Group	DIST:NG nxx! or DIST:NG nxx!t h! or DIST:NG nxx;RMV! or DIST:NG nxx t h;RMV!	nxx = Office code t = Thousands digit h = Hundreds digit	VER:LINE	VER:LINE
One Digit	DIST:ODIG nn! or DIST:ODIG;RMV!	nn = Number of one-digit tables (0 – 63)	–	OP:OFR/ODIG ALL/END!
Precut and Test Line Maps	DIST:PRECUT! or DIST:PRECUT;RMV!			
Route Index	DIST:RT1 nnn! or DIST:RT1; RMV!	nnn = Number of route index entries (0 – 255)	VER:RT1	OP:OFR/RT1 ALL/END!
Special Billing Table	DIST:SBIL nnnn! or DIST:SBIL;RMV!	nnnn = Number of special billing table entries (1 – 1024)	VER:LINE	VER:LINE
Scan Point	DIST:SCAN nn! or DIST:SCAN;RMV!	nn = Number of line scanners (1 – 15)	VER:OE	OP:OFR/SP ALL/END!
Screening Classes	DIST;SCRCLS cc!	cc = Screening classes (0 – 62)	VER:SCR	OP:OFR/SCR ALL/END!
Screening Tables	DIST:SCRTBL tt! or DIST:SCRTBL;RMV!	tt = Number of screening tables (0 – 63)	VER:SCR	OP:OFR/SCRTBL ALL/END!
Speed Call 30	DIST:SC30 nnnn! or DIST:SC30;RMV!	nnnn = Number of speed call 30 lists (1 – 546)	VER:SCN	VER:SCN
Speed Call 8	DIST:SC8 nnnn! or DIST:SC8;RMV!	nnnn = Number of speed call 8 lists (1 – 2047)	VER:SCN	VER:SCN
Terminal Office Test	DIST:TOTANI nn! or DIST:TOTANI;RMV!	nn = Number of TOTANI table indexes (1 – 63)		OP:OFR/TOTANI ALL/END!

* 3E3 Generic Only

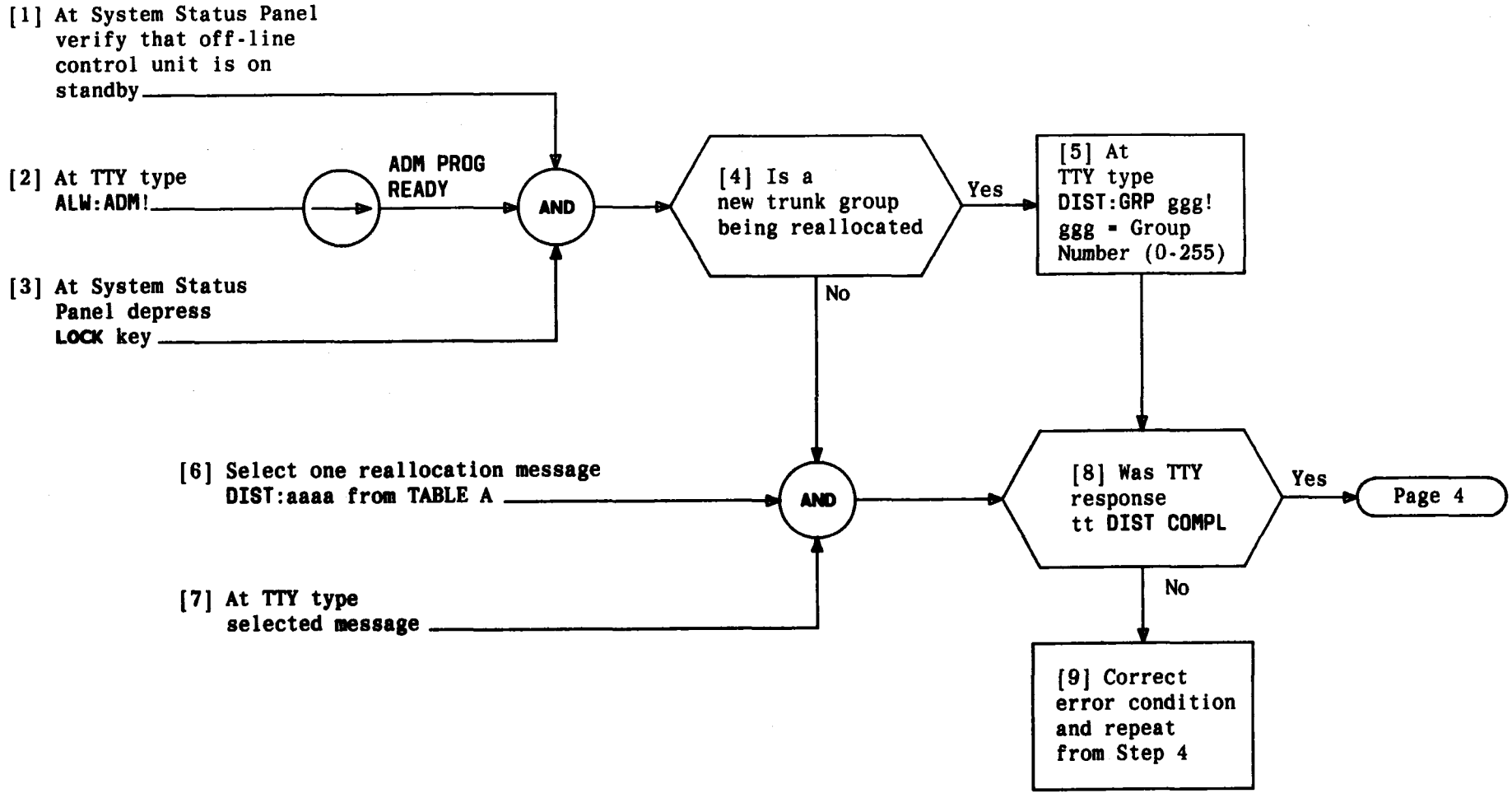

PERFORM REALLOCATION PROCEDURES

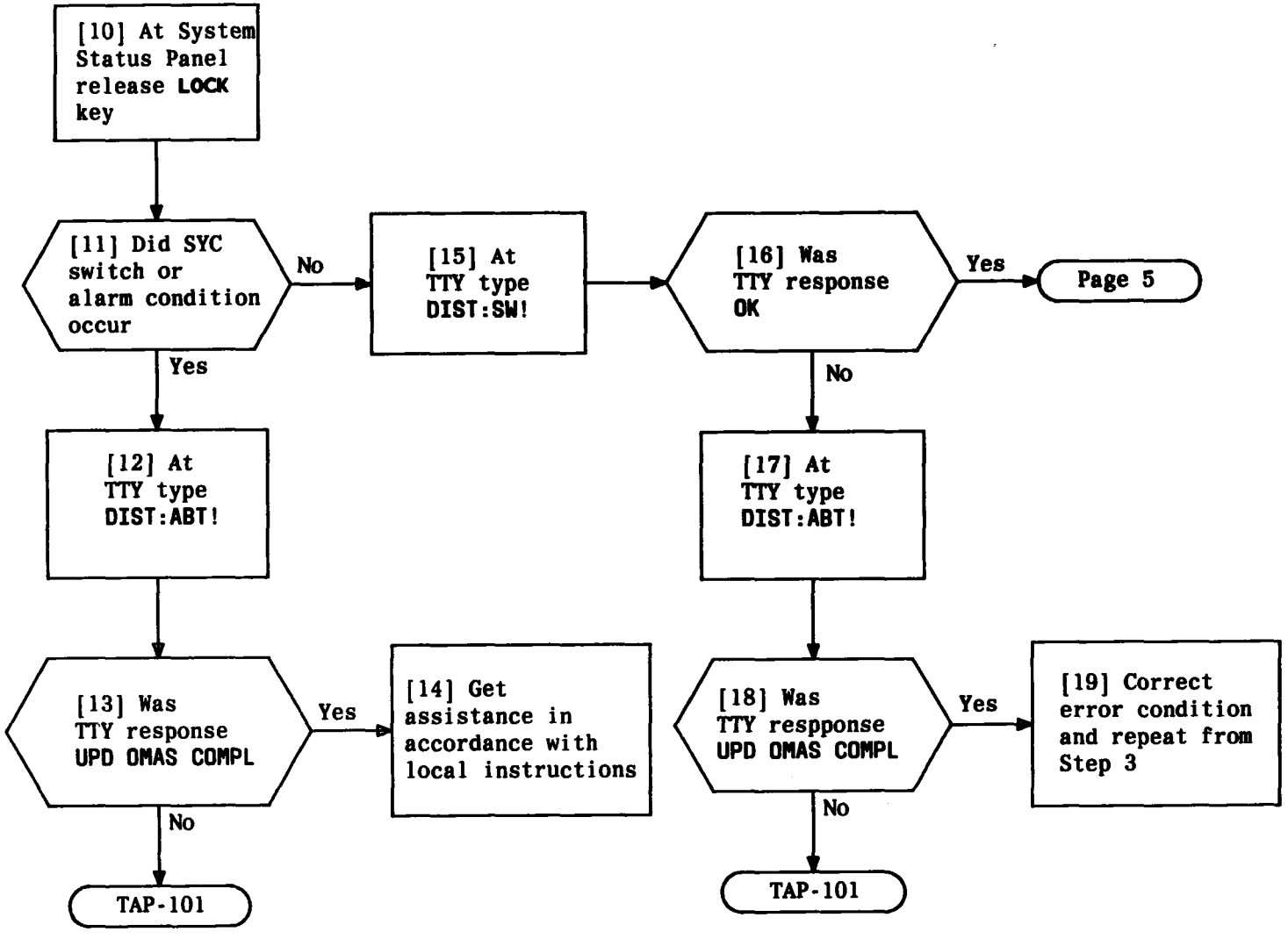

PERFORM REALLOCATION PROCEDURES

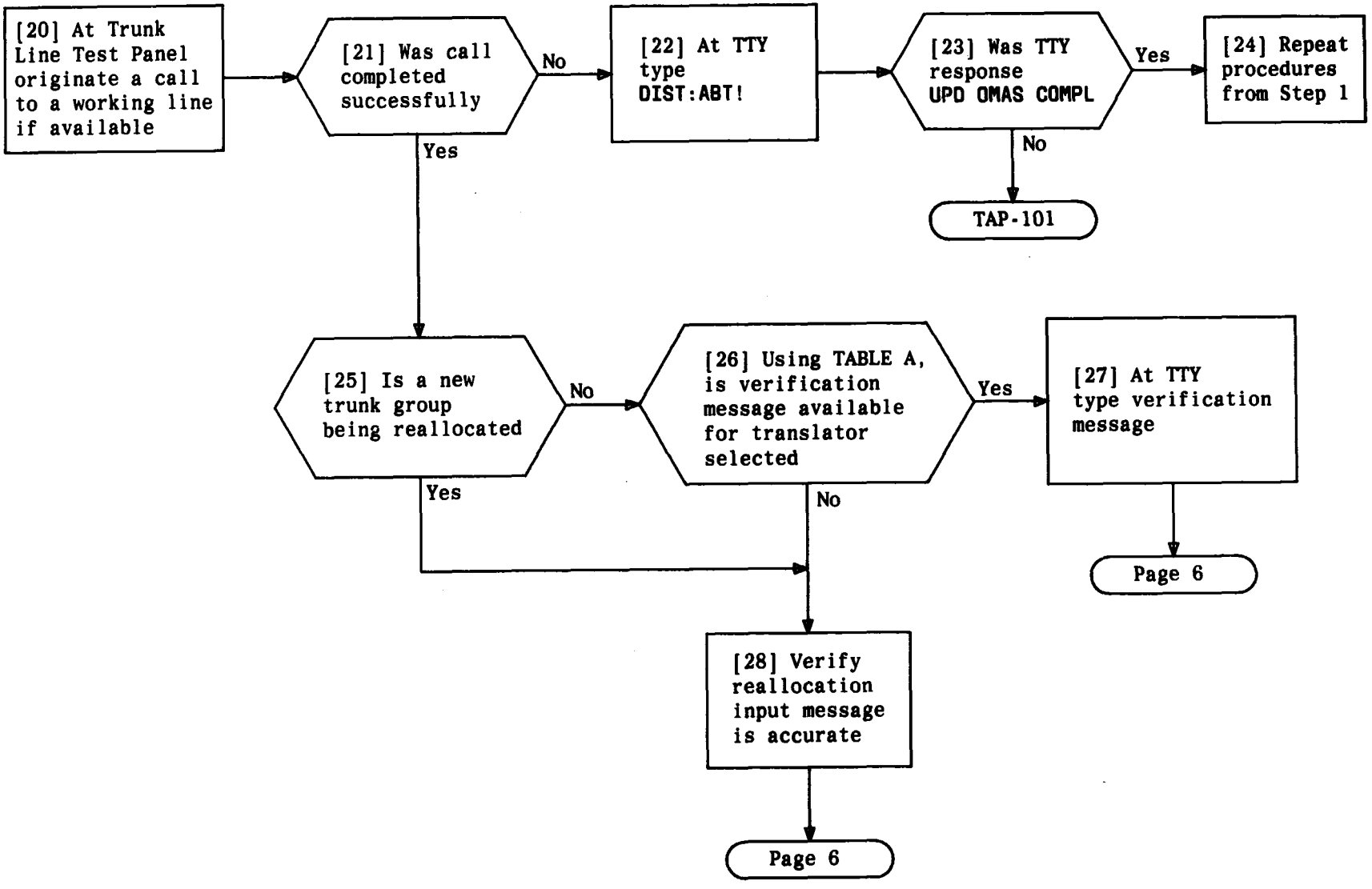

PERFORM REALLOCATION PROCEDURES

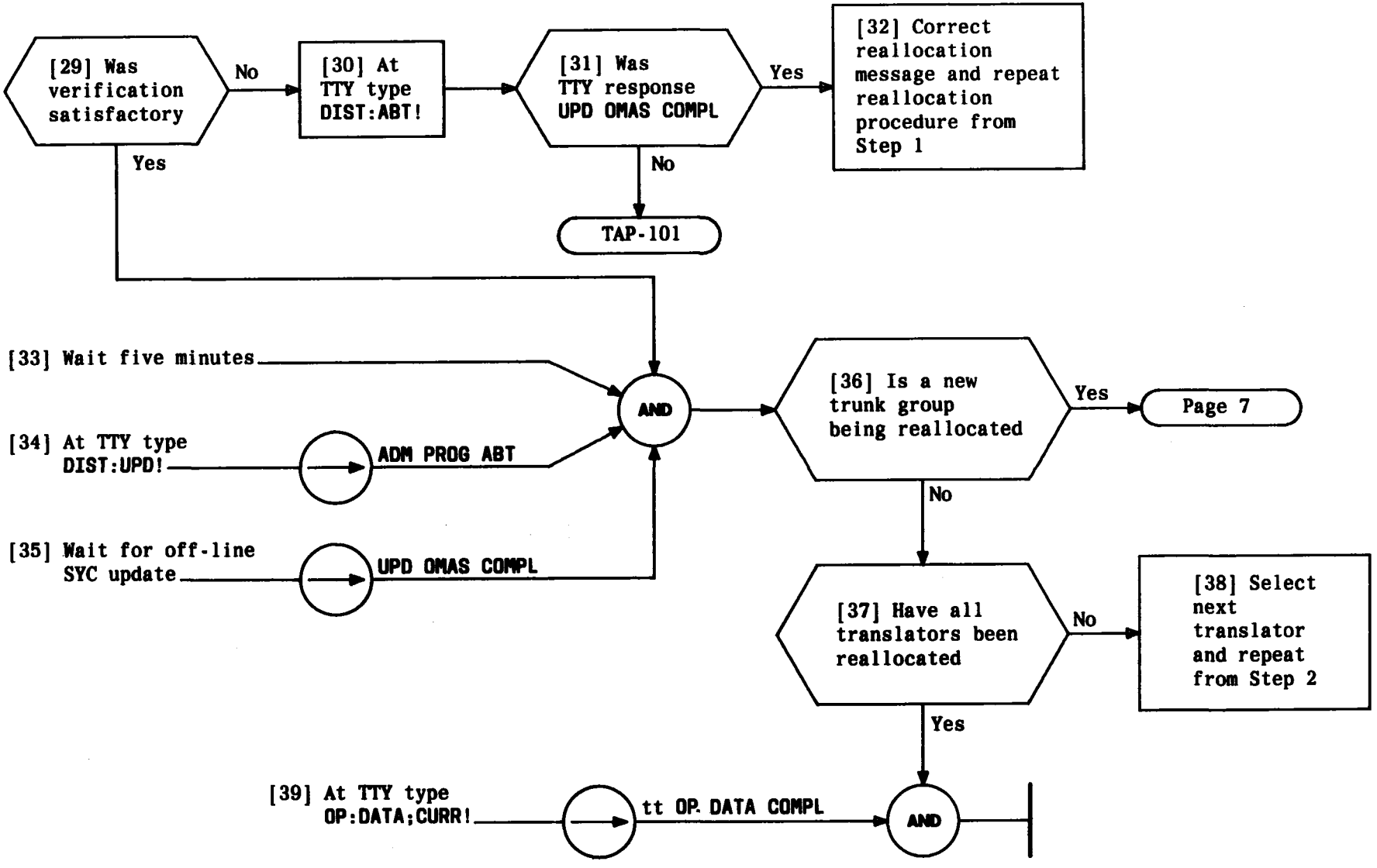

PERFORM REALLOCATION PROCEDURES

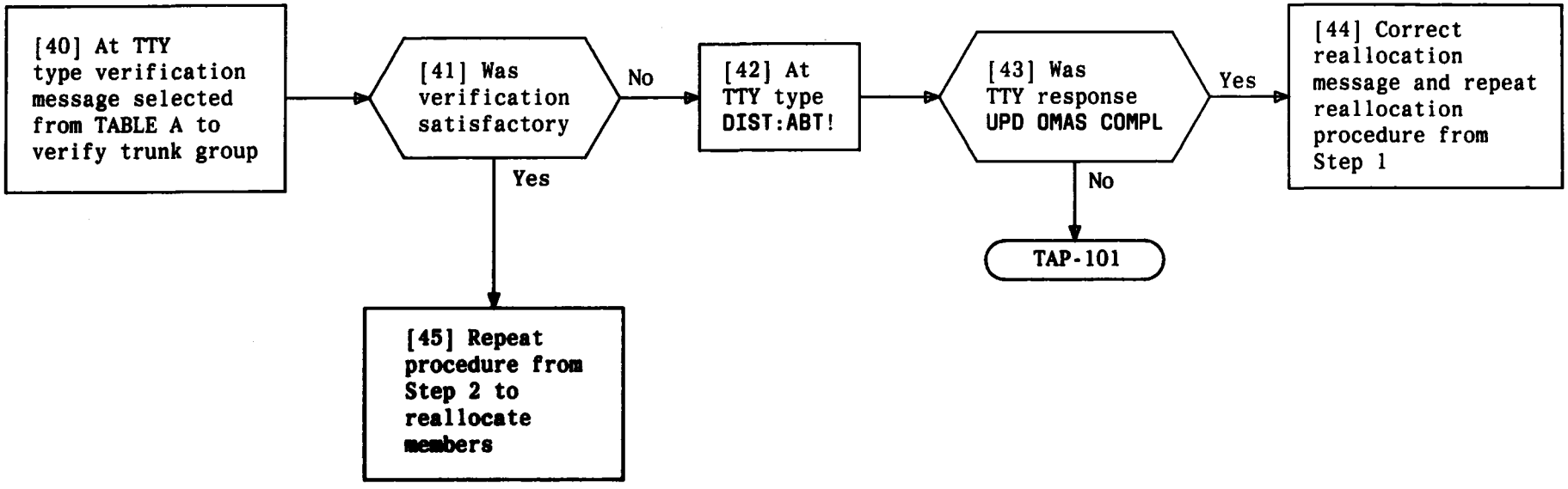

PERFORM REALLOCATION PROCEDURES

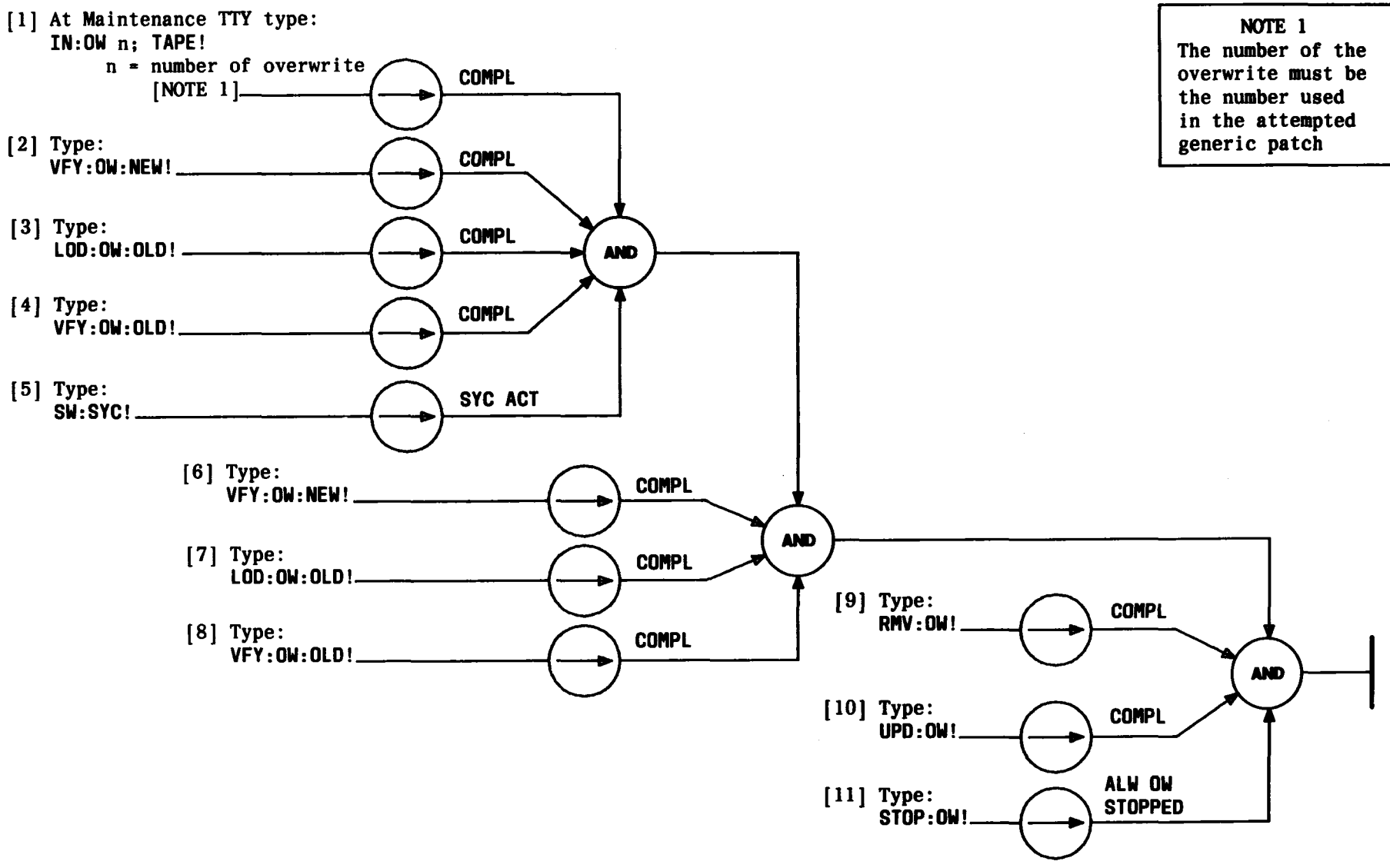

NOTE 1
The number of the overwrite must be the number used in the attempted generic patch

Issue 3	AUG 1984
233-142-100	DLP
PAGE 1 of 1	701

DISCONTINUE GENERIC PATCH BEFORE ACTIVATION (SO-2 GENERIC)

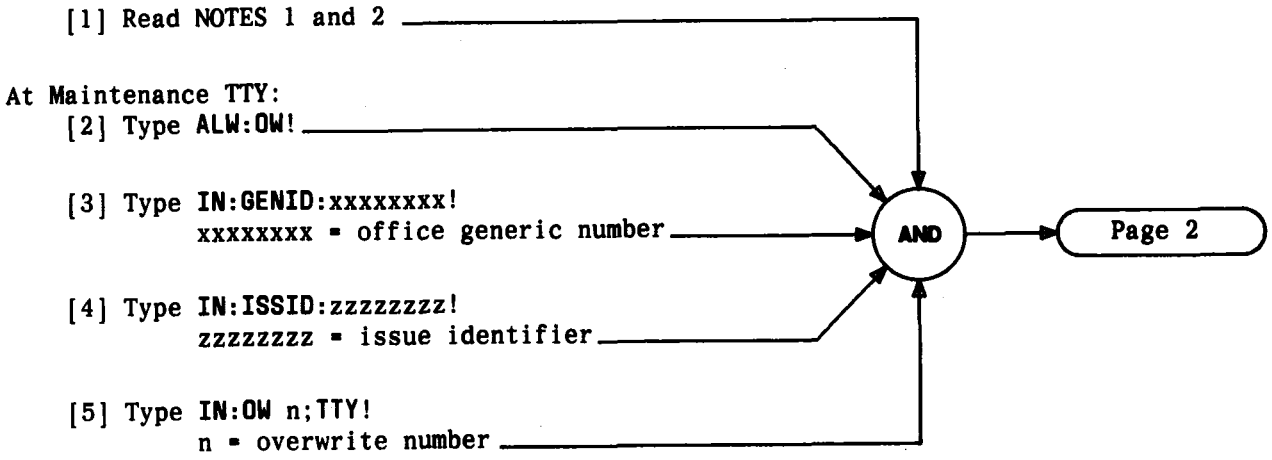

NOTES

1. System abnormalities must be corrected before this generic patch procedure is performed. The off-line SYC must be in standby
2. The order for the generic patch includes a listing (chips listing) of messages required in Steps 3, 4, 5, and 15

INSTALL GENERIC PATCH MANUALLY (SO-2 GENERIC)

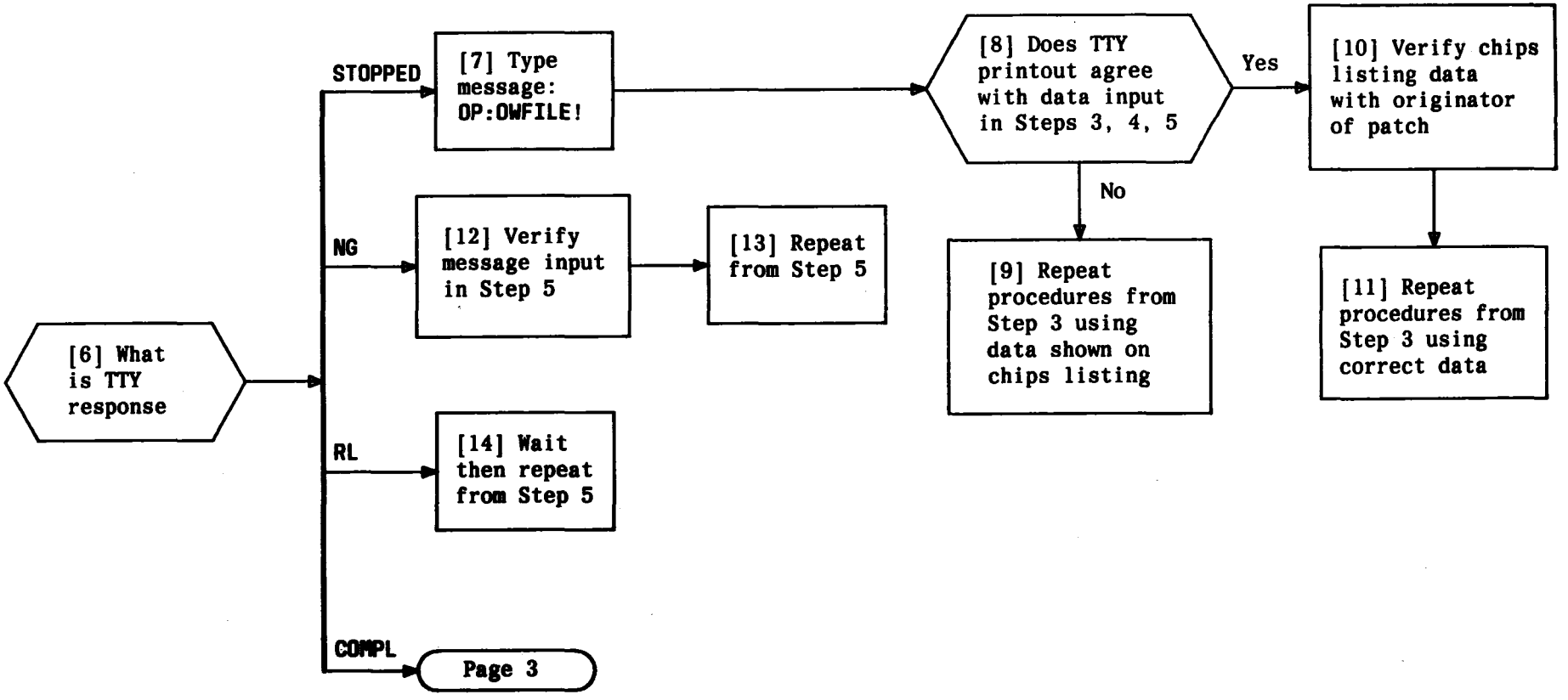

INSTALL GENERIC PATCH MANUALLY (SO-2 GENERIC)

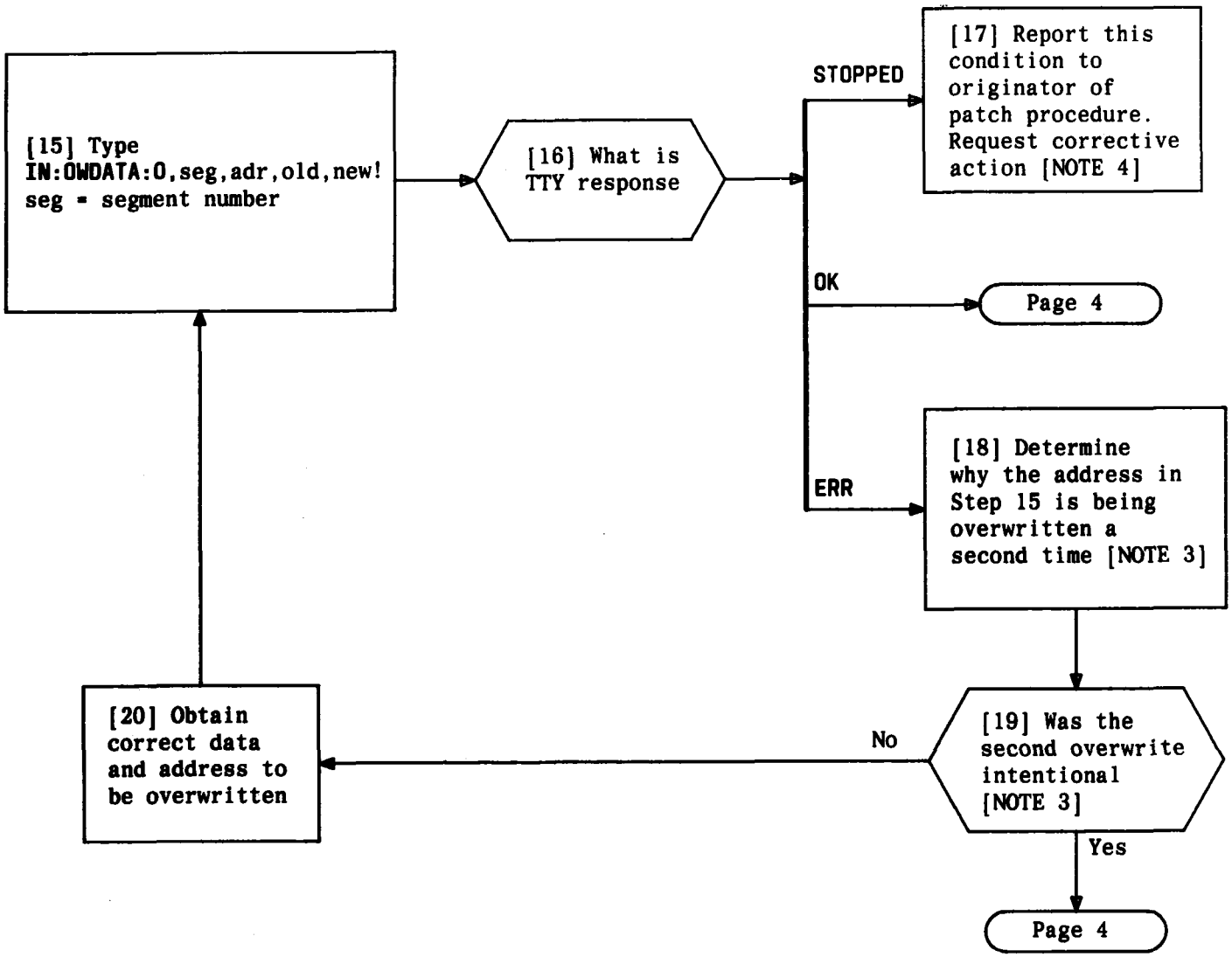

NOTES

3. The last IN:OWDATA input message specified an address that has been previously specified in this overwrite. This is a warning message. If the intent was to correct the previous specification, this message should be ignored
4. The last IN:OWDATA input message would have caused the overwrite buffer in the main store to overflow. It was thrown out. A similar response can be expected on any subsequent IN:OWDATA message for this overwrite. The overwrite is too big

INSTALL GENERIC PATCH MANUALLY (SO-2 GENERIC)

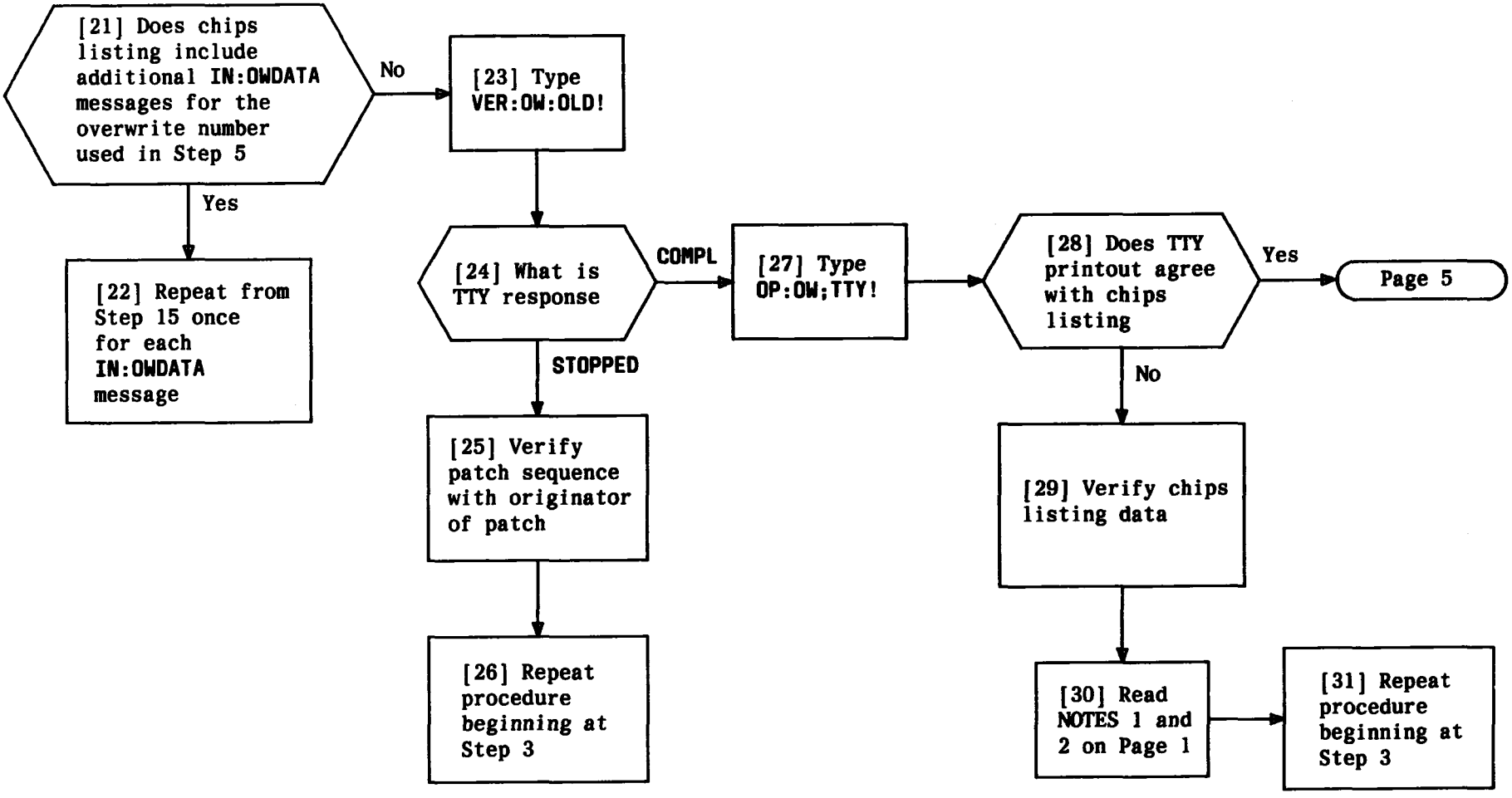

INSTALL GENERIC PATCH MANUALLY (SO-2 GENERIC)

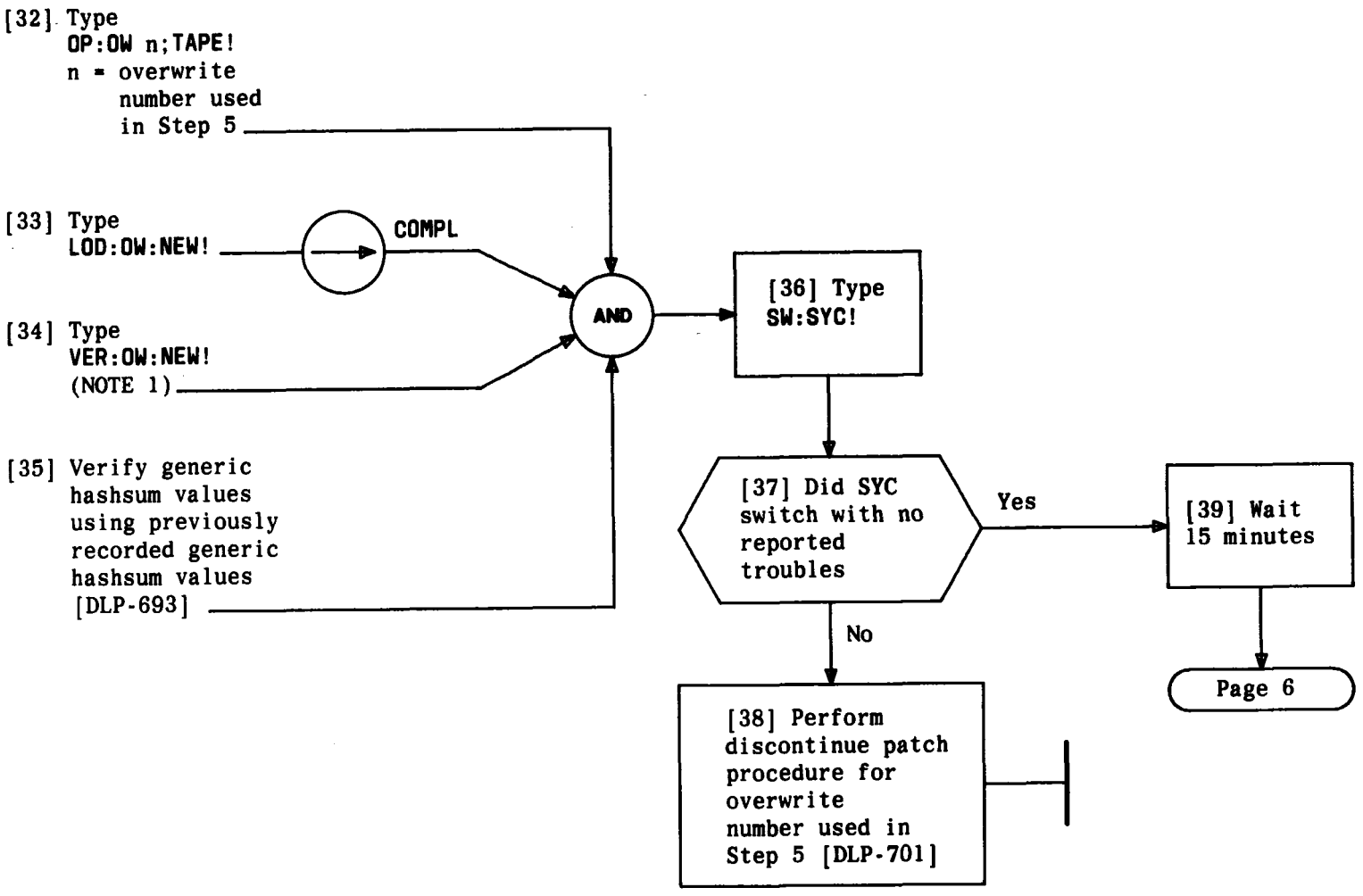

INSTALL GENERIC PATCH MANUALLY (SO-2 GENERIC)

[40] Type
LOD:OW:NEW!

[41] Type
VER:OW:NEW!
[NOTE 1]

[42] Type
ACT:OW!

[43] Type
UPD:OW!

[44] Repeat Steps
3 through 43 for
each overwrite
number on chips
listing

[45] Type
STOP:OW!

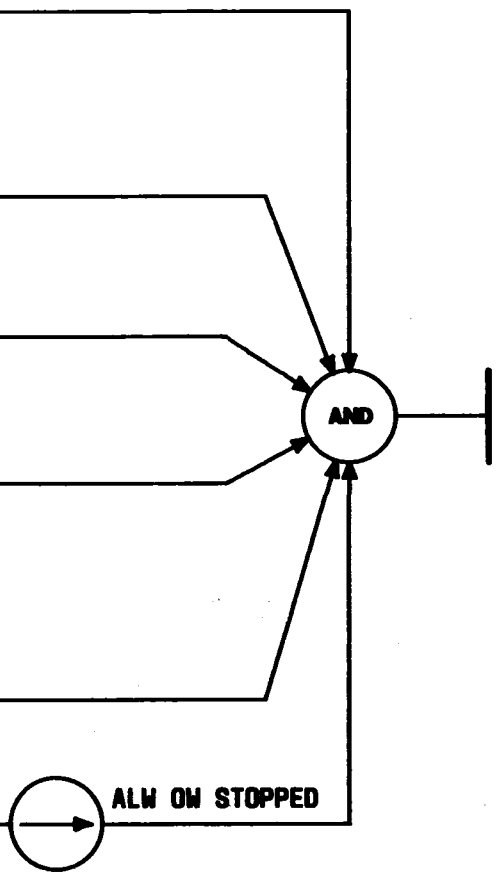

INSTALL GENERIC PATCH MANUALLY (SO-2 GENERIC)

[1] See FIG. 1. Remove connectors J5 and J6 from rear of CTT

[2] Remove eight mounting screws which secure CTT to TDC

[3] Carefully remove CTT through front of frame

AND

[4] Install CTT from front of frame

[5] Replace eight mounting screws

[6] Replace J5 and J6

AND

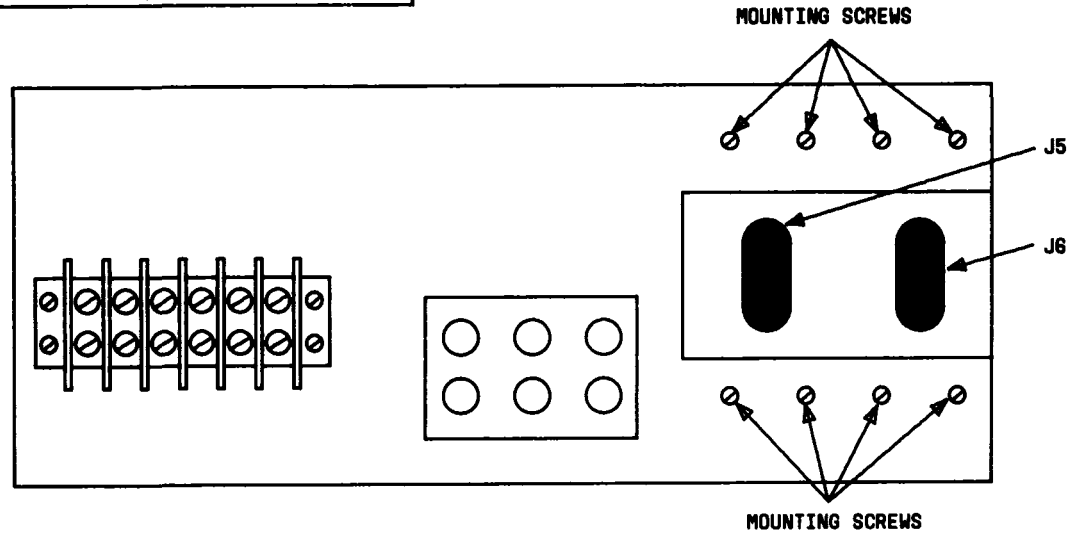

FIG. 1 – Rear View of CTT

REPLACE CARTRIDGE TAPE TRANSPORT (MINIRECORDER)

[1] Connect the clip leads of the 1014A test set to the cable pair tip and ring terminals of an assigned subscriber line [NOTE 1]

[2] On the 1014A test set, set **TALK – MON** key to **TALK**

Dial tone heard

[3] Move 1014A test set clip leads to different assigned subscriber line

[4] Repeat Steps 3 and 4 until all assigned directory numbers (subscriber lines) have been tested

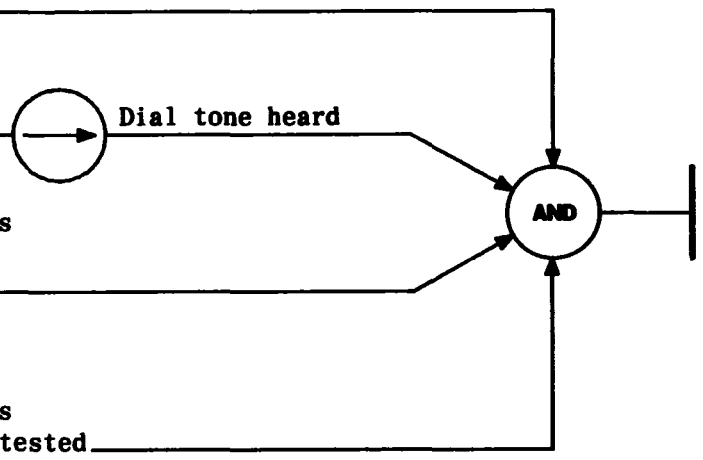

NOTE 1
For ground start lines, connect one test clip lead to the ring terminal and the other to frame ground

TEST FOR DIAL TONE FROM SUBSCRIBER LINES

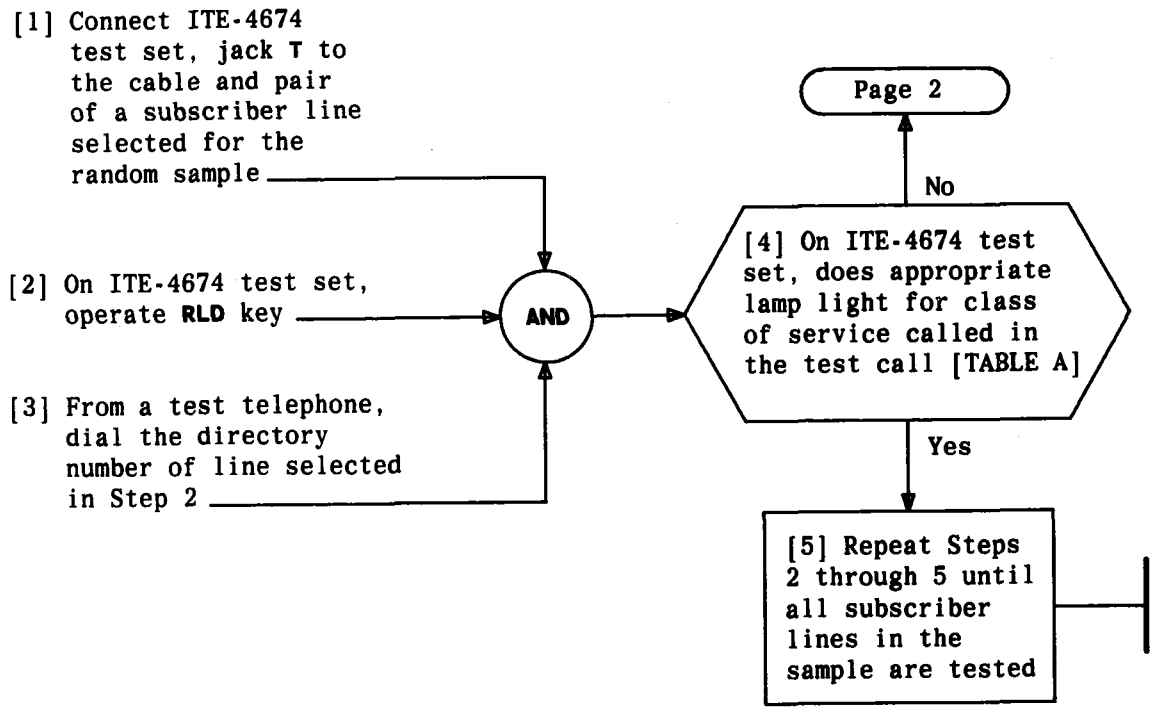

TABLE A

CLASS OF SERVICE	LAMP INDICATION FOR CORRECT RINGING POLARITY R-	T-	R+	T+
IFR, PBX, Coin, IFB, other 1 party lines	X			
2FR -- Pty 1	X			
-- Pty 2		X		
4FR -- Pty 1	X			
-- Pty 2		X		
-- Pty 3			X	
-- Pty 4				X
8FR -- Pty 1	X			
-- Pty 2		X		
-- Pty 3			X	
-- Pty 4				X
-- Pty 5	X			
-- Pty 6		X		
-- Pty 7			X	
-- Pty 8				X

NOTE 1
If ITE-4674 is unavailable, individual telephones wired for party and class of service being tested may be connected to terminals at CDF; to verify ringing applied to line is correct polarity

MAKE CALL TERMINATION AND RINGING POLARITY TEST

[6] On MC TTY type
VER:LINE:TN nxx-xxxx!
to verify that party
number and OE
assignment are correct

[7] Check CDF jumper to
ensure it has been run
correctly between cable
pair and OE assignment

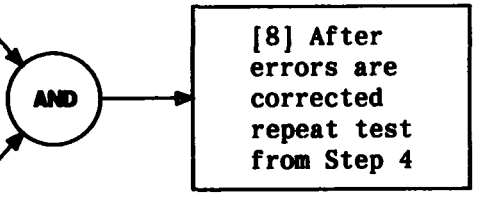

MAKE CALL TERMINATION AND RINGING POLARITY TEST

[1] Obtain information for RC:CKT
message from Traffic Facilities Group.
See TABLE A

[2] On MC TTY type
RC:CKT/
TYP NEW/
GRP nnn/
TER ooo/
OE gg cwsl/
SP ss rr pp/
DSP ss rr pp/
DP p ddd t/
CKT 7/
END!

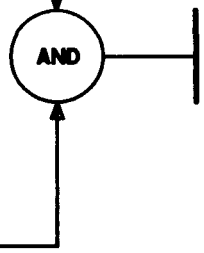

TABLE A	
VARIABLE	DEFINITION
nnn	Trunk Group Number
ooo	Group Member Number
gg	Concentrator Group
c	Concentrator
w	Switch Group
s	Switch
l	Level
ss	Scanner Number
rr	Row Number
pp	Scan Point in the Row
p	Peripheral Pulse Distributor
ddd	Peripheral Decoder
t	Triplet

ADD OFFICE-TO-OFFICE TRUNK CIRCUIT

[1] Analyze MC TTY message
OTO ERR yy TN nxx-xxxx OE gg cwsl.
nxx-xxxx = telephone number
gg = concentrator group
c = concentrator
w = switch group
s = switch
l = level
yy = Trouble Condition [TABLE A]

[2] Correct faults. See remarks in TABLE A

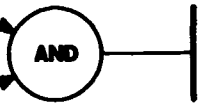

TABLE A

YY	CONDITION TESTED	REMARKS (POSSIBLE TROUBLE AREA)
01	Gnd on ring, battery on tip, should be open circuit	Jumper run in error, crossed cable pair or cable pair half tap
02	Gnd on tip, battery on ring, should be open circuit	Jumper run in error, crossed cable pair or cable pair half tap
03	Battery on tip, should be open circuit	Jumper run in error, crossed cable pair or cable pair half tap
04	Battery on ring, should be open circuit	Jumper run in error, crossed cable pair or cable pair half tap
05	Gnd on tip, should be open circuit	Faulty protectors on 3ESS switch CDF
06	Gnd on ring, should be open circuit	Faulty protectors on 3ESS switch CDF
09	Open between old office and 3ESS switch	Open jumper, open cable pair or protector on 3ESS switch CDF missing
10	Tip and ring are reversed	Jumper on CDF or cable pair tip and ring reversed
11	Wiring of line-attending element in old office does not agree with 3ESS switch translations	Translations in error
12	Line cutoff in old office did not operate as expected	Test distributor or test distributor control circuit

ANALYZE TTY PRINTOUTS AND CORRECT OFFICE-TO-OFFICE FAULTS

[1] Analyze MC TTY message OTO COMPL.
See TABLE A

[2] Verify that all telephone numbers have been tested or accounted for

[3] Verify clearance of trouble by typing
EX:OTO (nxx,xxx,yyy),GLP!
nxx = Office code
xxxx = First telephone number to be tested
yyyy = Last telephone number to be tested

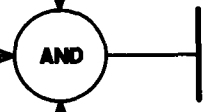

TABLE A

MCC TTY MESSAGE	EXPLANATION OF VARIABLE FIELDS
OTO COMPL aaaa bbbb cccc dddd eeee ffff	aaaa = Total Number Tested bbbb = Total Number with ATP (All Tests Pass) cccc = Total Number of BUSY Conditions on Two Attempts dddd = Total Number Untested* eeee = Total Number Unassigned ffff = Total Number of Errors

* PBX lines, multiline hunt groups, lines with special routing or lines not in precut mode must be tested manually

VERIFY OFFICE-TO-OFFICE TESTS MADE ON ALL TELEPHONE NUMBERS

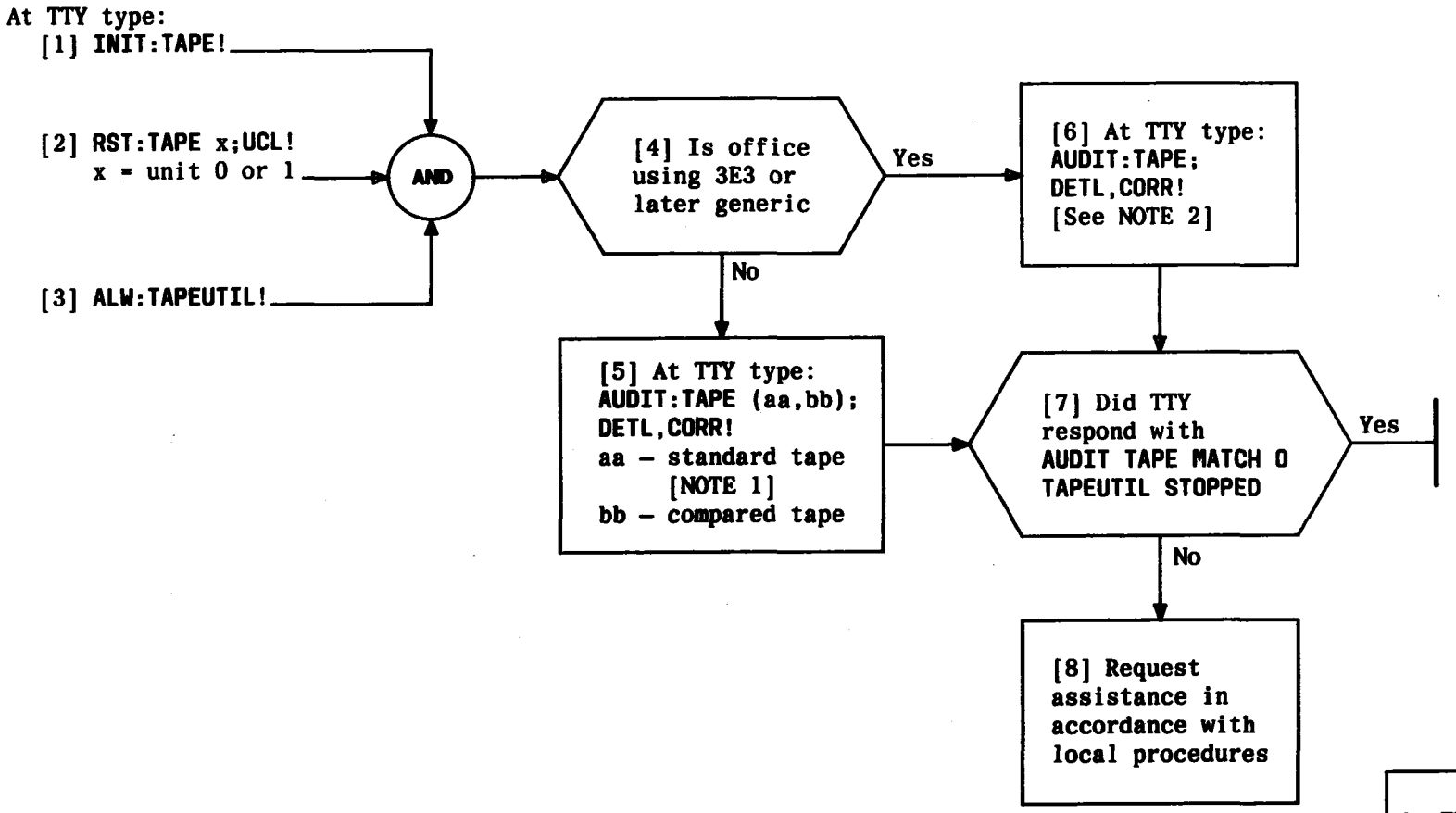

NOTES

1. The standard tape is unit (0 or 1) which was not receiving maintenance
2. The master (standard) tape is always assumed to be on unit 0

PERFORM TAPE AUDIT

[1] From office equipment (OE) number identify the concentrator group (CG), concentrator (C), switch group (SG), switch, and level [NOTE 1]

[2] At distributing frame shelf B, C, D, E, or F locate the OE terminal [FIG. 1]

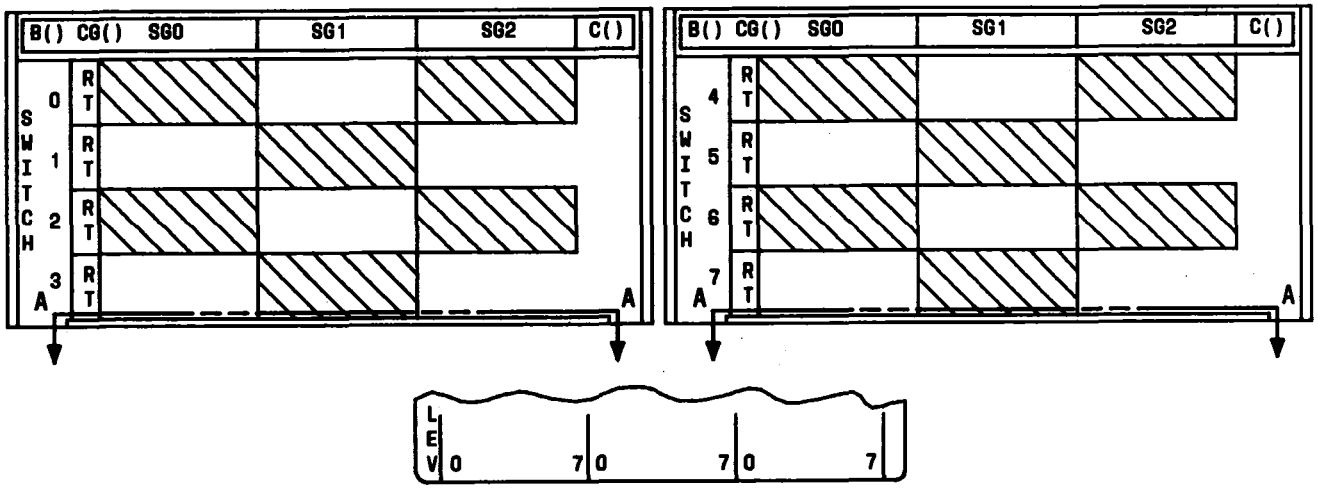

SECT. A-A

FIG. 1 – Connecting Blocks for One Concentrator

NOTE 1
The office equipment number identifies the following:

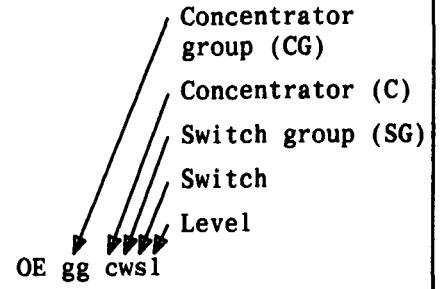

Issue 3	AUG 1984
233-142-100	DLP
PAGE 1 of 1	710

LOCATE OFFICE EQUIPMENT (OE) TERMINAL AT DISTRIBUTING FRAME

[1] Obtain two tie cable pair assignments between the old and new offices

[2] Run cross-connections on CDF between office-to-office trunk circuit and tie cable pairs to old office [FIG. 1]

[3] Run cross-connections on CDF between office-to-office trunk circuit and OE assignment termination [FIG. 1]

[4] Have personnel in old office connect tip, ring, and sleeve leads [tie cable connections] to old office test distributor

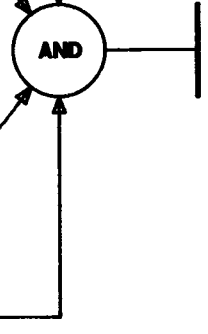

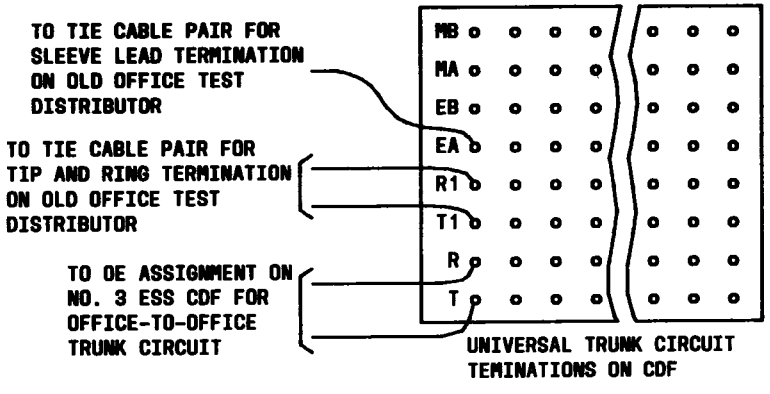

FIG. 1

ESTABLISH TEST CIRCUIT FOR OFFICE-TO-OFFICE TESTS BETWEEN OLD AND NEW OFFICE

On Oscilloscope:

[1] Set **POWER ON-OFF** switch to **OFF**

[2] Connect power cord to a suitable ac outlet

[3] Verify that oscilloscope is properly grounded

[4] Connect voltage probe to input connector **A**

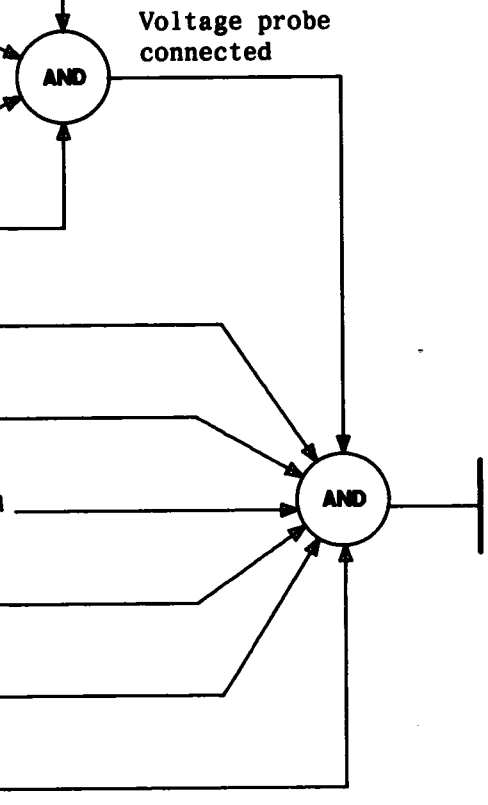

[5] Set input selector switch to **DC**

[6] Set **HORIZONTAL** display to **A**

[7] Set **TIME BASE A** to **.2 MILLISECONDS/CM**

[8] Set **VOLTS/CM** selector to **.2 VOLTS**

[9] Set **TRIGGER** to **INTERNAL**

[10] Set **POWER ON-OFF** to **ON** [NOTE 1]

NOTE 1
After voltage probe is connected in test circuit, adjustment of sweep control may be required to display waveform

Issue 3	AUG 1984
233-142-100	DLP
PAGE 1 of 1	712

CONDITION OSCILLOSCOPE

ITEM	ISSUE	ITEM	ISSUE	ITEM	ISSUE	ITEM	ISSUE	ITEM	ISSUE	ITEM	ISSUE
TPG-000		NTP-035		DLP-501		DLP-536		DLP-571		DLP-606	
• IXL-001		NTP-036		• DLP-502		DLP-537		DLP-572		DLP-607	
NTP-002		NTP-037		DLP-503		DLP-538		DLP-573		DLP-608	
NTP-003		NTP-038		DLP-504		DLP-539		DLP-574		DLP-609	
NTP-004		NTP-039		DLP-505		DLP-540		DLP-575		DLP-610	
NTP-005		NTP-040		DLP-506		DLP-541		DLP-576		DLP-611	
NTP-006		NTP-041		DLP-507		DLP-542		• DLP-577		DLP-612	
NTP-007		NTP-042		DLP-508		DLP-543		DLP-578		DLP-613	
NTP-008		NTP-043		DLP-509		DLP-544		DLP-579		DLP-614	
NTP-009		NTP-044		DLP-510		DLP-545		DLP-580		DLP-615	
NTP-010		NTP-045		DLP-511		DLP-546		DLP-581		DLP-616	
NTP-011		NTP-046		DLP-512		DLP-547		DLP-582		DLP-617	
NTP-012		NTP-047		DLP-513		DLP-548		DLP-583		DLP-618	
NTP-013		NTP-048		DLP-514		• DLP-549		DLP-584		• DLP-619	
NTP-014		TAP-100		DLP-515		DLP-550		DLP-585		DLP-620	
• NTP-015		TAP-101		DLP-516		DLP-551		DLP-586		DLP-621	
NTP-016		TAP-102		DLP-517		• DLP-552		DLP-587		DLP-622	
NTP-017		TAP-103		DLP-518		DLP-553		DLP-588		DLP-623	
• NTP-018		TAP-104		DLP-519		DLP-554		DLP-589		DLP-624	
NTP-019		TAP-105		DLP-520		DLP-555		DLP-590		DLP-625	
NTP-020		TAP-106		DLP-521		DLP-556		DLP-591		DLP-626	
NTP-021		TAP-107		DLP-522		DLP-557		DLP-592		DLP-627	
NTP-022		TAP-108		DLP-523		DLP-558		DLP-593		DLP-628	
NTP-023		TAP-109		DLP-524		DLP-559		DLP-594		DLP-629	
NTP-024		TAP-110		DLP-525		DLP-560		DLP-595		DLP-630	
NTP-025		• TAP-111		DLP-526		DLP-561		DLP-596		DLP-631	
NTP-026		TAP-112		DLP-527		DLP-562		DLP-597		DLP-632	
NTP-027		TAP-113		DLP-528		DLP-563		DLP-598		DLP-633	
NTP-028		TAP-114		DLP-529		DLP-564		DLP-599		DLP-634	
NTP-029		TAP-115		DLP-530		DLP-565		DLP-600		DLP-635	
NTP-030		TAP-116		DLP-531		DLP-566		DLP-601		DLP-636	
NTP-031		• TAP-117		DLP-532		DLP-567		DLP-602		DLP-637	
NTP-032		TAP-118		DLP-533		DLP-568		DLP-603		DLP-638	
NTP-033		TAP-119		DLP-534		DLP-569		DLP-604		DLP-639	
NTP-034		DLP-500		DLP-535		DLP-570		DLP-605		DLP-640	

• REVISED OR ADDED ITEM □ CANCELED ITEM

CHECKLIST

ITEM	ISSUE	ITEM	ISSUE	ITEM	ISSUE	ITEM	ISSUE	ITEM	ISSUE	ITEM	ISSUE
DLP-641		DLP-676		DLP-711							
DLP-642		DLP-677		DLP-712							
DLP-643		DLP-678		CKL-891							
DLP-644		• DLP-679		TNG-893							
DLP-645		DLP-680		DPL-895							
DLP-646		DLP-681									
DLP-647		DLP-682									
DLP-648		DLP-683									
DLP-649		DLP-684									
DLP-650		DLP-685									
DLP-651		DLP-686									
DLP-652		• DLP-687									
DLP-653		DLP-688									
DLP-654		DLP-689									
DLP-655		DLP-690									
DLP-656		DLP-691									
DLP-657		DLP-692									
DLP-658		DLP-693									
DLP-659		DLP-694									
DLP-660		DLP-695									
DLP-661		DLP-696									
DLP-662		DLP-697									
• DLP-663		DLP-698									
DLP-664		DLP-699									
DLP-665		DLP-700									
DLP-666		DLP-701									
DLP-667		• DLP-702									
DLP-668		DLP-703									
DLP-669		DLP-704									
DLP-670		DLP-705									
DLP-671		DLP-706									
DLP-672		DLP-707									
DLP-673		DLP-708									
DLP-674		DLP-709									
DLP-675		DLP-710									

This book is called a Task Oriented Practice or "TOP". It is a programmed document that gives step-by-step instructions to enable you to do a job (or task). A TOP can be a very useful aid in doing your everyday work if you use it correctly.

An important thing to remember about TOP is that it is a programmed document giving step-by-step instructions to do a job. Since the instructions are given in the order that they must be done, you cannot enter a procedure except at the beginning. You ***must*** do the step-by-step instructions in the order given. Failure to follow the instructions in the proper order may cause service interruptions.

Another thing to remember about TOP is that it contains all the instructions that you need to do a job. If you are experienced on a particular job, TOP will provide you with just that information you need to do the job. If you are doing the job for the first time, you will be given step-by-step instructions with enough detail so that you will not have to guess or remember where to find the necessary details. Remember that TOP can provide you with just that information you need regardless of your experience in doing a job.

The work that you do can be classified into two broad job categories – ***Trouble Clearing*** and ***Non Trouble Clearing***. This is how TOP defines these two types of work:

Trouble Clearing

Trouble clearing is simply what it says – that work you do to clear and repair troubles in the system. Trouble clearing may be done in answering a customer complaint or in responding to an office alarm, a trouble report, or an abnormal TTY printout, etc.

Non Trouble Clearing

Non trouble clearing is simply what it says – that work you do which is not connected with trouble clearing. This type is work that you do to accept a system after it has been installed, turn up a system for service, maintain a system according to a controlled maintenance plan, etc.

Now glance briefly at the front cover. In the upper right corner is a 9-digit number which identifies the volume. Near the center is the title of the volume which tells you something about the contents, such as the system (or subsystem) name and perhaps what kind of jobs are included in the volume. Next is the decision-action-logic diagram which directs you either to this training package or to 001 depending on your ability to use TOP.

Now turn to FIG. 1 which shows a typical page of 001. In the lower left is the title, "TASK INDEX LIST" which tells you something about this list, such as it is a listing of tasks arranged in alphabetical order. This list is actually a listing of the tasks included in the volume. The tasks are listed in alphabetical order and permuted on key words to simplify locating a task. On the right side of the page is a column of reference numbers under the heading "THEN GO TO." To use this list, locate the job to be done and turn to the reference number in the "THEN GO TO" column.

Now assume that you have been assigned the task of performing a system test on a system covered by a TOP. On 001 in FIG. 1, locate the job "System Test." Notice that this entry tells you to go to NTP-016 (Non Trouble Procedure) under the "THEN GO TO" column. Next you will have to locate the procedure, NTP-016. All procedures in a TOP are arranged in numerical sequence. In actual use of TOP, you would simply turn to the procedure. Look over

FIND YOUR JOB IN THE LIST BELOW	THEN GO TO
Alert; External – Horn, Ringer, Etc. – Remove	NTP-028
Amplifiers; Channel – Recorded Announcement Frame – Test	NTP-009
AR03 PWR ALM RA bb – bb = 16-30	TAP-105
BRDG LED – Does Not Light – Correct	TAP-117
Bridging Controller; Trunk – J1C015MB – Replace	DLP-572
Channel Amplifiers – Recorded Announcment Frame – Test	NTP-009
Drum Wiper – Common Systems Recorded Announcement Frame – Inspect	NTP-010
Extended Station Capability – Nonkey Set Only – Reported Failure	TAP-123
External Alert – Horn, Ringer, Etc. – Remove	NTP-028
Interchange Two Working Station Numbers	NTP-081
LED; BRDG – Does Not Light – Correct	TAP-117
Loudspeaker Paging – Add	NTP-059
Loudspeaker; – Remove	NTP-006
Station Capability; Extended – Nonkey Set Only – Reported Failure	TAP-123
System Test – Perform	NTP-016
Trunk Bridging Controller – J1C015MB – Replace	DLP-572
TTY Printout – AR03 PWR ALM RA bb – bb = 16-30	TAP-105
Wiper; Drum – Common Systems Recorded Announcment Frame – Inspect	NTP-010

FIG. 1

HOW TO USE TOP

the following example which shows a typical page of NTP-016. Note that the items are numbered in the left column. They ***must*** be completed in that order. You will also note that in item 2 there are some lettered (A, B, C) items. These lettered items are optional ways to do an item, that is you only have to do one of the lettered items.

Remember that this procedure gives you all the items that must be done and the order in which they must be done to complete the job. If you know how to do an item, you should go ahead and do it without going to the referenced details in the "FOR DETAILS, GO TO" column. If, on the other hand, you need additional details on how to do the item, then you should turn to the procedure listed in the "FOR DETAILS, GO TO" column. In either case, after completing an item, you should continue with the next item.

A TOP is designed so that you have to read only what is necessary to get your job done. If you know how to do an item, look no further for the "how to" information – just do the item and go on to the next item. This idea is called "bypassing" in TOP. In addition to not having to

DO THE ITEMS BELOW IN THE ORDER LISTED	FOR DETAILS, GO TO
1 Obtain Support Apparatus Listed Below: • Hewlett-Packard 3531A Transmission Measuring Set • 2P4C Patching Cord	–
2 Place SEC/SEB in Off-Line Mode	–
A. If in On-Line Mode, Change System From On-Line to Off-Line	DLP-509
B. If Powered Down, Condition System for Off-Line Operation as Follows:	–
1. Power up Minicomputer	DLP-503
2. Power up Line Printer	DLP-528
3. Power up Maintenance Terminal	DLP-510
7 Run Computer Display Terminal Test for All Positions	DLP-513
8 Mount Tape	DLP-500

Issue 1	DEC 1980
123-456-789	NTP
PAGE 1 of 4	016

PERFORM SYSTEM TEST

look further for details, three other ways of "bypassing" are provided in TOP to help you bypass reading information you already know (see FIG. 2):

Summary Statement

A summary statement is used with a procedure to tell you briefly how to do the procedure and what type measurement or result can be observed. If you can do the procedure after reading the summary, go ahead and do it without reading any further. Simple procedures may not have summaries.

Result Statement

A result statement may be used in a flow-charted procedure along with the AND symbol. If, after reading the results statement, you know how to do the action indicated, go ahead and do it without reading the steps associated with the AND symbol.

Support Procedures

When you see the following kind of reference in TOP it refers to a support procedure:
The support procedure [DLP-530] (Detailed Level Procedure) provides the information on how to operate the VTVM. Here again, if you already know how to operate the VTVM, go ahead and do it without looking up any further information.

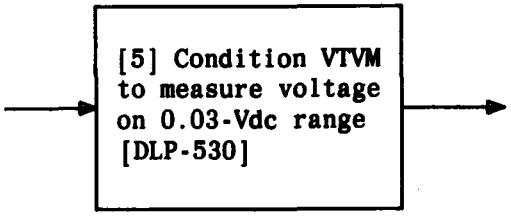

Now assume that you are doing a system test on a system covered by a TOP. In the process of doing this test you are instructed to mount a tape. For the purposes of this example, assume that you do not know how to mount the tape and must look up additional details. Figure 2 on Page 5 shows you examples of bypassing that can be used. Take a few moments to examine this figure and make sure you understand the techniques of bypassing.

While using a TOP, you will probably run across a reference similar to this:

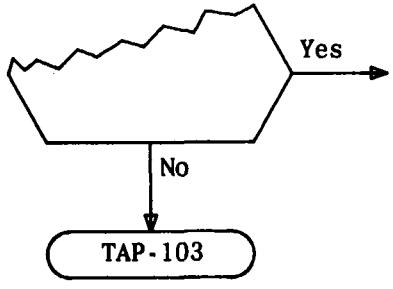

This reference to TAP-103 (Trouble Analysis Procedure) indicates that the equipment is not operating correctly, and that you should refer to TAP-103 and clear this trouble condition. After clearing the trouble, you should reenter the flowchart at the beginning (Step 1).

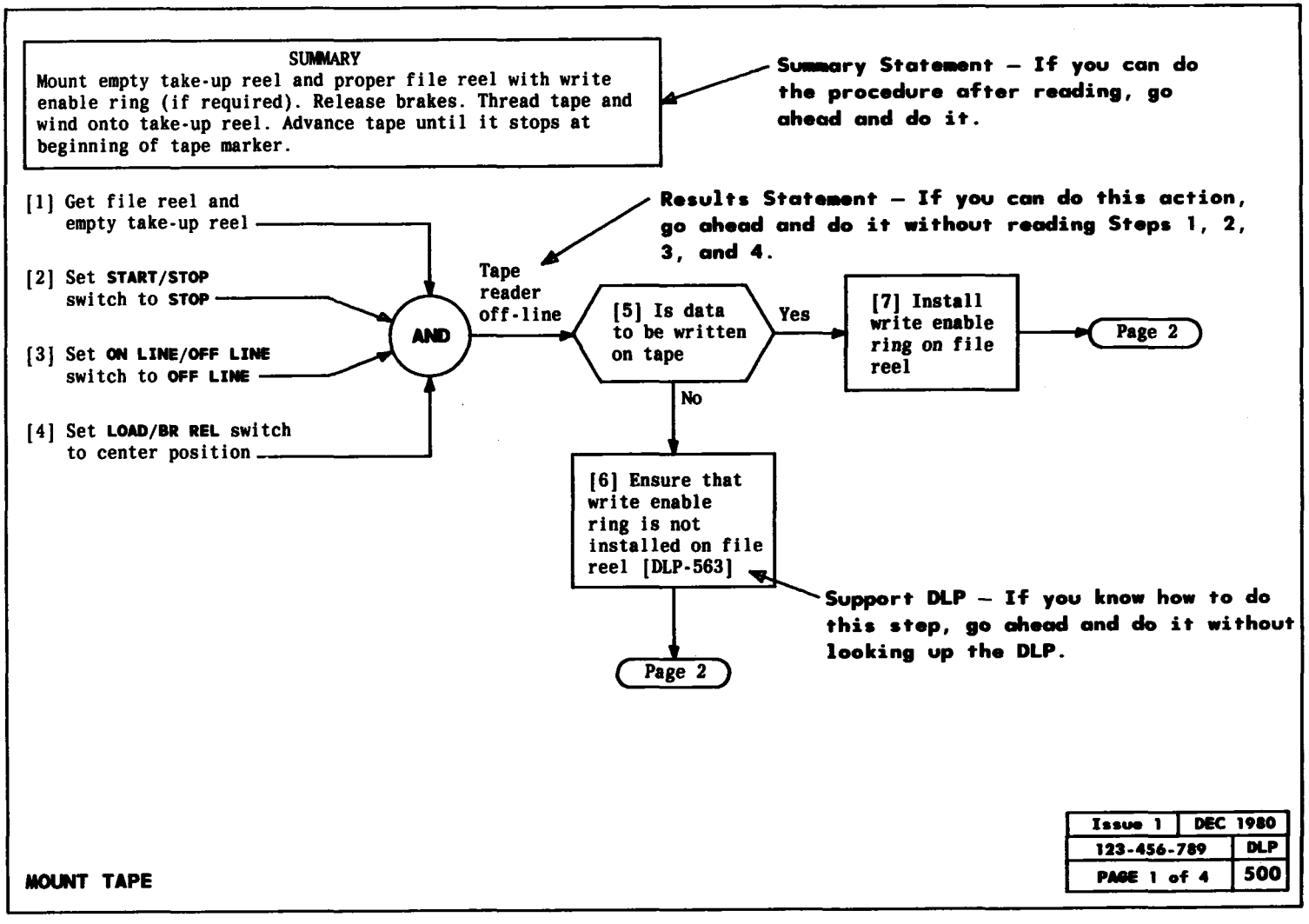
SUMMARY
Mount empty take-up reel and proper file reel with write enable ring (if required). Release brakes. Thread tape and wind onto take-up reel. Advance tape until it stops at beginning of tape marker.
Summary Statement – If you can do the procedure after reading, go ahead and do it.
Results Statement – If you can do this action, go ahead and do it without reading Steps 1, 2, 3, and 4.
[1] Get file reel and empty take-up reel
[2] Set START/STOP switch to STOP
[3] Set ON LINE/OFF LINE switch to OFF LINE
[4] Set LOAD/BR REL switch to center position
AND
Tape reader off-line
[5] Is data to be written on tape
Yes
No
[7] Install write enable ring on file reel
Page 2
[6] Ensure that write enable ring is not installed on file reel [DLP-563]
Page 2
Support DLP – If you know how to do this step, go ahead and do it without looking up the DLP.
MOUNT TAPE
Issue 1 DEC 1980
123-456-789 DLP
PAGE 1 of 4 500

FIG. 2

This idea can be carried further. In some cases, a decision block may have more than one abnormal output. This means that you should try more than one solution to the problem. See the example below.

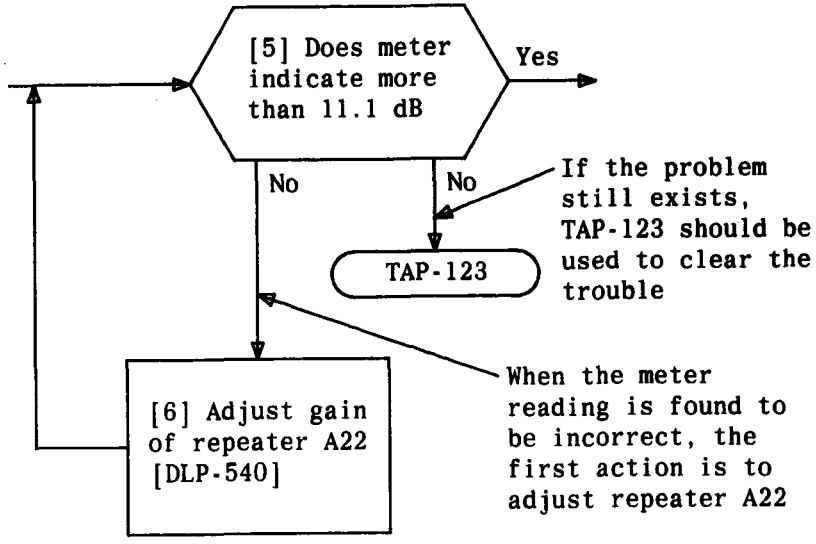

Trouble-clearing information in TOP is used basically the same way as non trouble-clearing information. When an alarm or trouble report requires you to troubleshoot a system covered by a TOP, the TASK INDEX LIST (IXL-001) is the place to start. After locating your job on IXL-001 you will be referenced to a Trouble Analysis Procedure (TAP) to find the information to aid in the location of the trouble. The TAP may reference to other information, such as Trouble Analysis Data (TAD) or Isolation Diagram (ISD) as an aid in the trouble-clearing process.

Now assume that you have to clear a major alarm on a terminal in a system covered by a TOP. Figure 3 on Page 7 shows how to access and how to use trouble-clearing information.

HOW TO USE TOP

A TOP shows hard-wired and plug-in units on Isolation Diagrams (ISD) in the following manner:

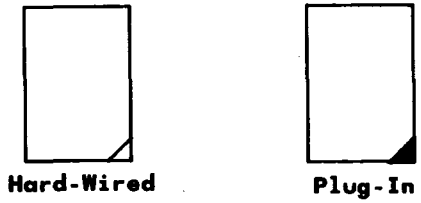

Always do a job safely. Below are three things you should heed in TOP:

DANGER – ***means there is a possibility of personal injury***

CAUTION – ***means there is a possibility of service interruptions***

WARNING – ***means there is a possibility of equipment damage***

TABLE A on Page 8 shows some of the more important symbols and definitions.

While using TOP, if you find errors, or if a procedure is inadequate or missing, call the TOP HOTLINE number shown on the front cover. Your comments are greatly needed to help prepare better documentation. Comments may also be forwarded using form E3973 which is available through your company.

Now that you know how to use TOP, return to IXL-001 and find the job you need to do.

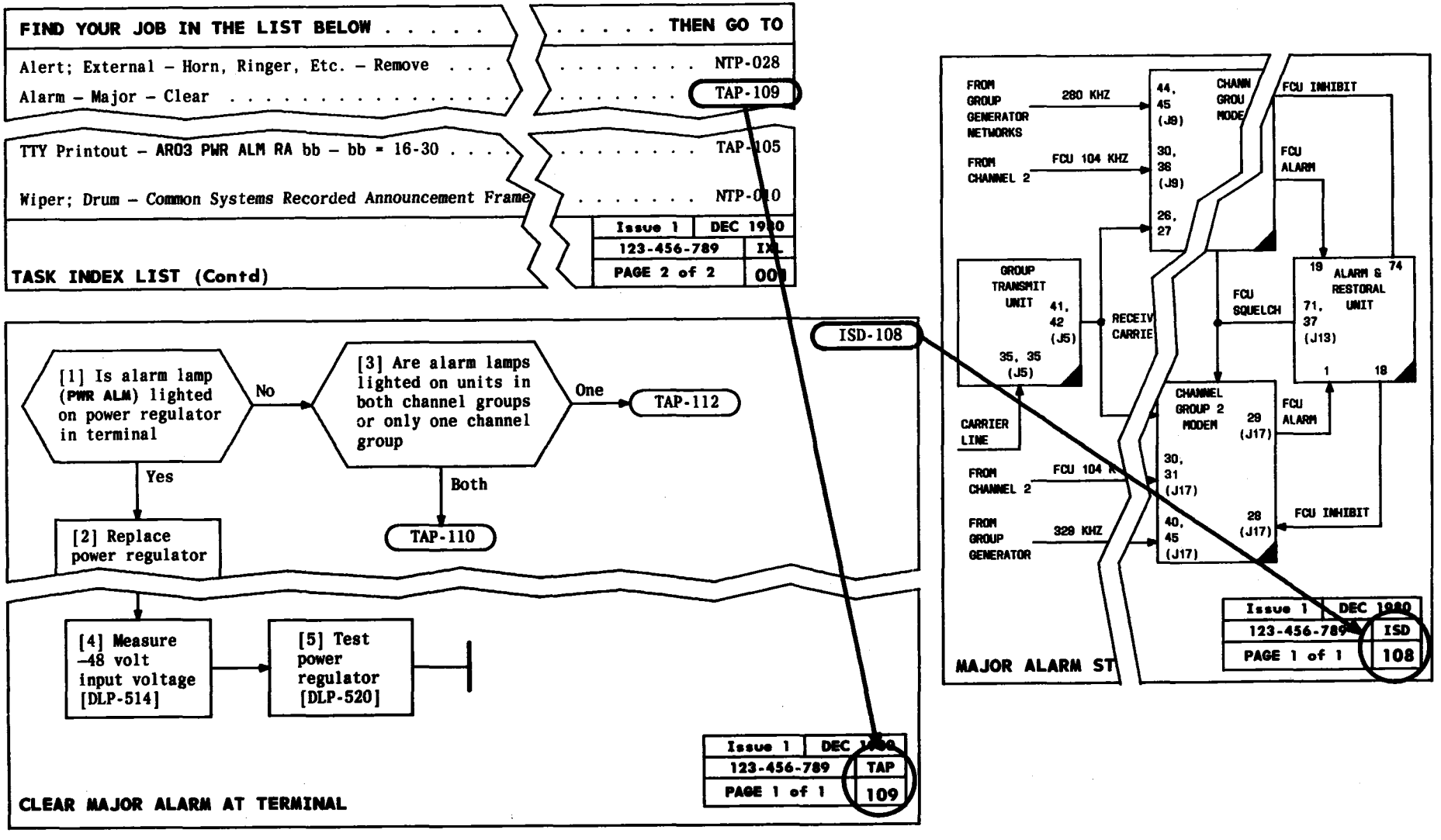

FIG. 3

HOW TO USE TOP

TABLE A
IMPORTANT TOP SYMBOLS AND DEFINITIONS

SYMBOL	DEFINITION
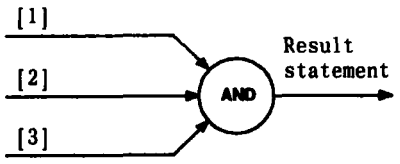	The AND operation symbol is used where the successful completion of a group of instructions accomplishes a meaningful result that can be defined. The symbol indicates that each input instruction must be performed in the order given to accomplish the output (result statement). In instances where results cannot be defined, results statements are not provided.
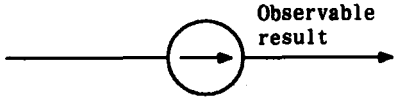	The flow-through symbol relates graphically a single instruction to the expected observable result(s).
	The end-of-procedure symbol denotes that the procedure has been completed.
	The reference bubble symbol indicates an exit from a page (either to a continuation page or to trouble-clearing data) or indicates the starting point of a procedure.
Acceptance (NTP-002)	Acceptance gives an overview of the acceptance techniques and facilities.
Maintenance Philosophy (TAD-100)	The maintenance philosophy, when provided, gives an overview of the considerations designed into the trouble-clearing procedures.
Checklist (CKL-891)	The checklist reflects the volume content (inventory) at any given time, the issue identifier of each data element therein, those data elements revised and/or added, and those data elements deleted from a previous issue.
Documentation Plan (DPL-895)	The documentation plan gives a bird's-eye view of all the TOP volumes covering a system. This plan can help you to quickly determine the correct volume.

3ESS SWITCH

TOP DOCUMENTATION

3ESS Switch	
Office Equipment Routine Data Acceptance Data Company Order Data	233-142-100
Remote Office Test Line Acceptance Data	233-142-110
System Trouble Clearing	233-143-100
Power Equipment Routine Data Acceptance Data	233-144-100

DOCUMENTATION PLAN