Task Oriented Practice
(TOP)

REMOTE OFFICE TEST LINE (ROTL)

WITH MINI-REMOTE TRUNK TEST UNIT (MINI-RTTU) APPLICATION

3"ESS" SWITCH

NOTICE
Not for use or disclosure outside the
AT&T Companies except under written agreement

Printed in U.S.A.

Issue 2	DEC 1983
233-142-110	TPG
TITLE PAGE	000

FIND YOUR JOB IN THE LIST BELOW	THEN GO TO
105-Type Test Line Buildout – Perform	NTP-006
Acceptance	NTP-002
Centralized Automatic Reporting on Trunks (CAROT) Reported Troubles – Clear	TAP-114
Mini-RTTU Loss Build-out Adjustments – Perform	NTP-009
Remote Office Test Line (ROTL) Buildout – Perform Using **92A** Control Unit	NTP-008
ROTL Buildout – Perform Using **H-310-150** ROTL System Test Set	NTP-005

Acceptance tests are performed by operating company personnel to verify that newly installed remote office test line (ROTL) equipment is capable of operating properly and that associated translations are correct.

When performing acceptance tasks for ROTL system, any troubles should be referred to the Western Electric Company installation group for correction. Since many of the tests performed for acceptance are later performed as office routines, many data elements (DLPs) contain references to trouble analysis procedures (TAPs). These TAPs may be useful in resolving any troubles that occur during acceptance testing, but final responsibility lies with the Installation Group to correct any troubles.

Verify that tests in Western Electric Company Handbook 269, Section 613 have been performed.

If the H-310-150 ROTL System test set is to be used when the acceptance tests are performed, perform the following acceptance tasks in the order listed:

TASK	PROCEDURE
1. Accept **Mini-ROTL** Unit	NTP-003
2. Perform ROTL Buildout Using H-310-150 ROTL System Test Set	NTP-005
3. Perform 105-Type Test Line Buildout	NTP-006
4. Accept ROTL System Overall Using H-310-150 ROTL System Test Set	NTP-004

If the 92A control unit is to be used when the acceptance tests are performed, perform the following acceptance tasks in the order listed:

TASK	PROCEDURE
1. Accept **Mini-ROTL** Unit	NTP-003
2. Perform ROTL Buildout Using 92A Control Unit	NTP-008
3. Perform 105-Type Test Line Buildout	NTP-006
4. Accept ROTL System Overall Using 92A Control Unit	NTP-007

DO THE ITEMS BELOW IN THE ORDER LISTED	FOR DETAILS, GO TO
1	Obtain Support Apparatus Listed Below: • **EXECUPORT** Data Terminal or Equivalent With the Following Characteristics: 110-Baud Data Rate, American Standard Code for Information Interchange (ASCII Code) Electronic Industries Association (EIA) **RS-232** Serial Interface Jack and Connecting Cable Accoustical Coupler and Modem or Equivalent Full-Duplex Capability Upper Case Keyboard • **KS-4442A** Voltohmmeter or Equivalent General Use Voltohmmeter • Two **2P4A** Cords	–
2	From Office Records Form 3100, Identify and Record Telephone Numbers (TNs) and Office Equipment (OE) Numbers for 105A- (ETYP 34) and 105B- (ETYP 35) Test Lines	–
3	For Each 105-Type Test Line Identified in Item 2, at Maintenance TTY, Type: **RMV:LINE (*a,bcde*), TN *fg*!** (*a,bcde* = OE Number) (*f g* = Telephone Number)	–
4	At Maintenance TTY, Type: **RMV:SVC (103,0);UCL!**	–
5	Set Up Data Terminal	DLP-513
6	Perform Central Processing Unit (CPU) Diagnostic Test – TE CP	DLP-514
7	Perform Diagnostic and Running Checksum Diagnostic Test – TE DC and TE RC	DLP-515
8	Perform Random Access Memory (RAM) Diagnostic Test – TE RA	DLP-516
9	Perform Multiplex Diagnostic Test – TE MU	DLP-517
10	Perform Message Channel Diagnostic Test – TE MC	DLP-518
11	Perform Remote Office Test Line (ROTL) Tones Diagnostic Test – TE RT	DLP-519
12	Perform Trunk Tones Diagnostic Test – TE TT	DLP-520
13	Perform Tone Detector Diagnostic Test – TE TD	DLP-521
	(Continued on Page 2)	

DO THE ITEMS BELOW IN THE ORDER LISTED		FOR DETAILS, GO TO
14	Perform Multifrequency (MF) Detector Diagnostic Test – TE MF	DLP-522
15	Perform 105-Test Line Diagnostic Test – TE TL	DLP-523
16	Perform Port Select Relays Diagnostic Test – TE TR	DLP-524
17	Perform Port Continuity Relay Diagnostic Test – TE RO	DLP-525
18	Perform Hold Coil and Pulsing Relay Diagnostic Test – TE HB	DLP-526
19	Perform USART Diagnostic Test – TE 37	DLP-555
20	Check Responder Alignment	DLP-511
21	Remove Test Cord Between **Mini-ROTL EIA** Jack and Data Terminal	–
22	At Maintenance TTY, for Each 105-Type Test Line Removed From Service in Item 3, Type: **RST:LINE (*a,bcde*), TN *f g!***	–
23	At Maintenance TTY Type: **RST:SVC(103,000)!**	–
24	At **Mini-ROTL** CP 19, Depress **PWR OFF** Switch to Turn Power Off	–
25	At Rear of **Mini-ROTL**, Plug in Connector **P4**	–
26	At **Mini-ROTL**, Restore Power	DLP-530
27	Check Dialup Connection	DLP-512

DO THE ITEMS BELOW IN THE ORDER LISTED	FOR DETAILS, GO TO
1 Obtain Support Apparatus Listed Below: • ROTL System Test Set (RSTS) **H-310-150** • Two **3P15A** Cords	–
2 From Office Records Select: • An Outgoing Trunk Circuit Which Terminates in an Office Equipped With a 100-Type Test Line (Balance Test Line Termination ETYP 25) • An Outgoing Trunk Circuit Which Terminates in an Office Equipped With a 102-Type Test Line (Interrupted Milliwatt Test Line Termination ETYP 26) • An Outgoing Trunk Circuit Which Terminates in an Office Equipped With a 105-Type Test Line	–
3 For Each Trunk Circuit Identified in Item 3, Record: • Trunk Group Number (TGN) • Member Number (MEM) • Test Line Directory Number • Estimated Measured Loss (EML) • Noise Requirement	–
4 From Office Records Identify and Record: • ROTL Access Port Directory Number • 105-Test Line No. 1 Directory Number and Office Equipment Number • 105-Test Line No. 2 Directory Number and Office Equipment Number	–
5 Determine List Number of ROTL System Test Set	DLP-500
6 Perform ROTL System Test Set Self-Check Using A or B	–
A. For Lists 1 Through 3	DLP-501
B. For List 4	DLP-510
7 Using **3P15A** Cord, Connect Tip and Ring Jack to Working Telephone Line	–
(Continued on Page 2)	

ACCEPT ROTL SYSTEM OVERALL USING H-310-150 ROTL SYSTEM TEST SET

DO THE ITEMS BELOW IN THE ORDER LISTED		FOR DETAILS, GO TO
8	Assign Security Callback User No. 5 to Trunk and Line Test Panel Access Trunk 1	DLP-532
9	Access ROTL Port	DLP-509
10	Make Security Callback Unlock Request	DLP-502
11	Using One of the Trunk Circuits Identified in Item 3, Make Trunk Status Request	DLP-507
12	Using the Trunk Circuit Which Was Status Checked in Item 11, Make Busy and Restore Trunk Circuit	DLP-508
13	Using Test Line Data Recorded in Item 4, Test 105-Type Test Line Access	DLP-506
14	Using Trunk Data Recorded in Item 3, Test ROTL – 100-Type Test Line at Far End	DLP-503
15	Using Trunk Data Recorded in Item 3, Test ROTL – 102-Type Test Line at Far End	DLP-504
16	Using Trunk Data Recorded in Item 3, Test ROTL – 105-Type Test Line at Far End	DLP-505

DO THE ITEMS BELOW IN THE ORDER LISTED	FOR DETAILS, GO TO
1 Obtain Support Apparatus Listed Below: • **EXECUPORT** Data Terminal or Equivalent With the Following Characteristics: 110-Baud Data Rate (ASCII Code) **EIA RS-232** Serial Interface Jack and Connecting Cable Accoustical Coupler and Modem or Equivalent Full-Duplex Capability Upper-Case Keyboard • ROTL System Test Set (RSTS) H-310-150 • Reference Level Test Set (RTS) **WILCOM*T** 105 B Equipped With Power Cord • Low Loss Test Cord Arranged for Connection to 310-Type Jacks • Two **3P15A** Cords • One **ED-35136-30** Circuit Pack Extender	–
2 Determine List Number of ROTL System Test Set	DLP-500
3 Perform ROTL System Test Set Self-Check Using A or B	–
A. For Lists 1 Through 3	DLP-501
B. For List 4	DLP-510
4 Using **3P15A** Cord, Connect Tip and Ring Jack to Working Telephone Line	–
5 Assign Security Callback User No. 5 to Trunk Line Test Panel Access Trunk 1	DLP-532
6 At **Mini-ROTL**, Extend CP 16	DLP-528
7 At CP 17, Verify That 105 Test Line Impedance and Level Straps Are in Place	DLP-537
8 Establish Office Connections to **Mini-ROTL TUT PORT**	DLP-531
9 Set Up Reference Level Test Set	DLP-535
10 Using Low Loss Cord Provided With Reference Level Test Set (RTS), Connect RTS **310 INPUT** Jack to Trunk and Line Test Panel **ACCESS TRUNK** 1 Jack; Remove and Insert Plugs Several Times to Polish Contacts	–
11 Set Up Data Terminal Without Powering Down	DLP-540
(Continued on Page 2)	

* Registered trademark of Wilcom Products Inc.

PERFORM ROTL BUILDOUT USING H-310-150 ROTL SYSTEM TEST SET

DO THE ITEMS BELOW IN THE ORDER LISTED		FOR DETAILS, GO TO
12	Set Data Terminal Switches for 110 Baud, Full Duplex, On-Line	–
13	At **Mini-ROTL**, Adjust CP 16 Potentiometer **R2(TUT)** for 0-Ohm dBm Indications at RTS	DLP-536
14	At Trunk and Line Test Panel, Momentarily Depress **RELEASE** 1 Key, Then Momentarily Depress **ON** Key	–
15	Remove Reference Level Test Set	–
16	Remove ROTL System Test Set	–
17	Remove Data Terminal	–
18	Remove Extended CP 16 and Reinstall Without Extender	DLP-529

DO THE ITEMS BELOW IN THE ORDER LISTED	FOR DETAILS, GO TO
1 Obtain Support Apparatus Listed Below: • **EXECUPORT** Data Terminal or Equivalent With the Following Characteristics: 110-Baud Data Rate (ASCII Code) **EIA RS-232** Serial Interface Jack and Connecting Cable Accoustical Coupler and Modem or Equivalent Full-Duplex Capability Upper-Case Keyboard • Reference Level Test Set (RTS) **WILCOM*T** 105 B Equipped With Power Cord • Low Loss Cord Arranged for Connection to 310-Type Jacks • **ED-35136-30** Circuit Pack Extender	–
2 From Office Records Form 3100, Identify Telephone Numbers (TNs) and Office Equipment (OE) Numbers for 105A- (ETYP 34) and 105B- (ETYP 35) Test Lines	–
3 At Maintenance TTY, Remove 105A- and 105B-Test Lines From Service. For Each Test Line, Enter: • RMV:LINE(*a,bcde*),TN *f g*! (*a,bcde* = Office Equipment Number) (*f g* = Telephone Number)	–
4 Remove ROTL Access Port From Service. Enter: RMV:SVC(103,0);UCL!	–
5 Extend CP 16	DLP-528
6 At CP 17, Verify That Impedance and Level Straps Are in Place	DLP-537
7 Near Combined Distributing Frame, Set Up Reference Level Test Set	DLP-535
8 Set Up Data Terminal	DLP-513
9 Build Out 105A Test Line	DLP-538
10 At TLTP, Depress **ON** Switch to Extinguish Lamp	–
11 Build Out 105B Test Line	DLP-539
(Continued on Page 2)	

* Registered trademark of Wilcom Products, Inc.

PERFORM 105-TYPE TEST LINE BUILDOUT

DO THE ITEMS BELOW IN THE ORDER LISTED	FOR DETAILS, GO TO
12	Release Trunk and Line Test Panel: • Momentarily Depress **ON** Key • Remove Test Cords	–
13	Remove Reference Level Test Set and Test Cord Connections	–
14	At Maintenance TTY Restore ROTL Access Port to Service, Enter: **RST:SVC(103,0)!**	–
15	Restore 105A- and 105B-Test Lines to Service; For Each Test Line, Enter: **RST:LINE(*a,bcde*),TN *f g*!**	–
16	Remove Extended CP 16 and Reinstall Without Extender	DLP-529

DO THE ITEMS BELOW IN THE ORDER LISTED	FOR DETAILS, GO TO
1 Obtain Support Apparatus Listed Below: • **92A** Control Unit • **225A** Adapter • Two **3P15A** Cords	–
2 From Office Records Select: • An Outgoing Trunk Circuit Which Terminates in an Office Equipped With a 100-Type Test Line (Balance Test Line Termination ETYP 25) • An Outgoing Trunk Circuit Which Terminates in an Office Equipped With a 102-Type Test Line (Interrupted Milliwatt Test Line Termination ETYP 26) • An Outgoing Trunk Circuit Which Terminates in an Office Equipped With a 105-Type Test Line	–
3 For Each Trunk Circuit Identified in Item 3, Record: • Trunk Group Number (TGN) • Member Number (MEM) • Test Line Directory Number • Estimated Measured Loss (EML) • Noise Requirement	–
4 From Office Records Identify and Record: • ROTL Access Port Directory Number • 105-Test Line No. 1 Directory Number and Office Equipment Number • 105-Test Line No. 2 Directory Number and Office Equipment Number	–
5 Perform **92A** Control Unit Self-Tests	DLP-541
6 Assign Security Callback User No. 5 to Trunk Line Test Panel Access Trunk 1	DLP-532
7 At **92A** Control Unit, Access ROTL Port	DLP-542
8 Make Security Callback Unlock Request	DLP-543
(Continued on Page 2)	

ACCEPT ROTL SYSTEM OVERALL USING 92A CONTROL UNIT

DO THE ITEMS BELOW IN THE ORDER LISTED		FOR DETAILS, GO TO
9	Using One of the Trunk Circuits Identified in Item 3, Make Trunk Status Request	DLP-544
10	Using the Trunk Circuit Which Was Status Checked in Item 9, Make Busy and Restore Trunk Circuit	DLP-545
11	Using Test Line Data Recorded in Item 4, Test 105-Type Test Line Access	DLP-506
12	Using Trunk Data Recorded in Item 3, Test ROTL – 100-Type Test Line at Far End	DLP-546
13	Using Trunk Data Recorded in Item 3, Test ROTL – 102-Type Test Line at Far End	DLP-547
14	Using Trunk Data Recorded in Item 3, Test ROTL – 105-Type Test Line at Far End	DLP-548

DO THE ITEMS BELOW IN THE ORDER LISTED	FOR DETAILS, GO TO
1	Obtain Support Apparatus Listed Below: • **EXECUPORT** Data Terminal or Equivalent With the Following Characteristics: 110-Baud Data Rate (ASCII Code) **EIA RS-232** Serial Interface Jack and Connecting Cable Accoustical Coupler and Modem or Equivalent Full-Duplex Capability Upper-Case Keyboard • **92A** Control Unit • Reference Level Test Set (RTS) **WILCOM*T** 105 B Equipped With Power Cord • Low Loss Test Cord Arranged for Connection to 310-Type Jacks • Two **3P15A** Cords • One **ED-35136-30** Circuit Pack Extender	–
2	Perform **92A** Control Unit Self-Tests	DLP-541
3	Assign Security CallBack User No. 5 to Trunk and Line Test Panel Access Trunk 1	DLP-532
4	At **Mini-ROTL**, Extend CP 16	DLP-528
5	At CP 17, Verify That 105-Test Line Impedance and Level Straps Are in Place	DLP-537
6	Establish Office Connections to **Mini-ROTL** TUT PORT	DLP-549
7	At Trunk and Line Test Panel (TLTP), Set Up Reference Level Test Set	DLP-535
8	Using Low Loss Cord Provided With Reference Level Test Set, Connect RTS **310 INPUT** Jack to Trunk and Line Test Panel **ACCESS TRUNK 1** Jack; Under Writing Table, Remove and Insert Plugs Several Times to Polish Contacts	–
9	Set Up Data Terminal	DLP-513
10	Set Data Terminal Switches for 110 Baud, Full Duplex, On-Line	–
11	At **Mini-ROTL**, Adjust CP 16 Potentiometer **R2(TUT)** for 0-Ohm dBm Indications at RTS	DLP-536
12	At Trunk and Line Test Panel, Momentarily Depress **RELEASE 1** Key, Then Momentarily Depress **ON** Key	–
	(Continued on Page 2)	

* Registered trademark of Wilcom Products, Inc.

PERFORM ROTL BUILDOUT USING 92A CONTROL UNIT

DO THE ITEMS BELOW IN THE ORDER LISTED		FOR DETAILS, GO TO
13	Remove Reference Level Test Set	-
14	Remove 92A Control Unit	-
15	Remove Data Terminal	-
16	Remove Extended CP 16 and Reinstall Without Extender	DLP-529

DO THE ITEMS BELOW IN THE ORDER LISTED	FOR DETAILS, GO TO
1 Obtain Support Apparatus Listed Below: • Portable Data Terminal With **EIA RS 232** Interface Capabilities • **WILCOM*** **T** 105 B (or Equivalent) Reference Level Test Set (RTS) • Low Loss Test Cord With 310-Type Jacks on Both Ends • **914A** Tool (Extender Circuit Pack) • Directory Number of ACCESS TRUNK 2 at TLTP	–
2 Prepare **Mini-RTTU** for Loss Build-out Adjustments	DLP-550
3 Prepare **WILCOM T** 105 B Reference Level Test Set (RTS) for **Mini-RTTU** Loss Build-out Measurements	DLP-551
4 Adjust **Mini-RTTU** Loss Buildout	DLP-552
5 Depress the **POWER** Switch on the **WILCOM T 105 B** RTS to Turn Power Off	–
6 Disconnect **WILCOM T** 105 B Reference Level Test Set (RTS) From TLTP	–
7 Restore **Mini-RTTU** to Normal	DLP-553

* Registered trademark of Wilcom Products, Inc.

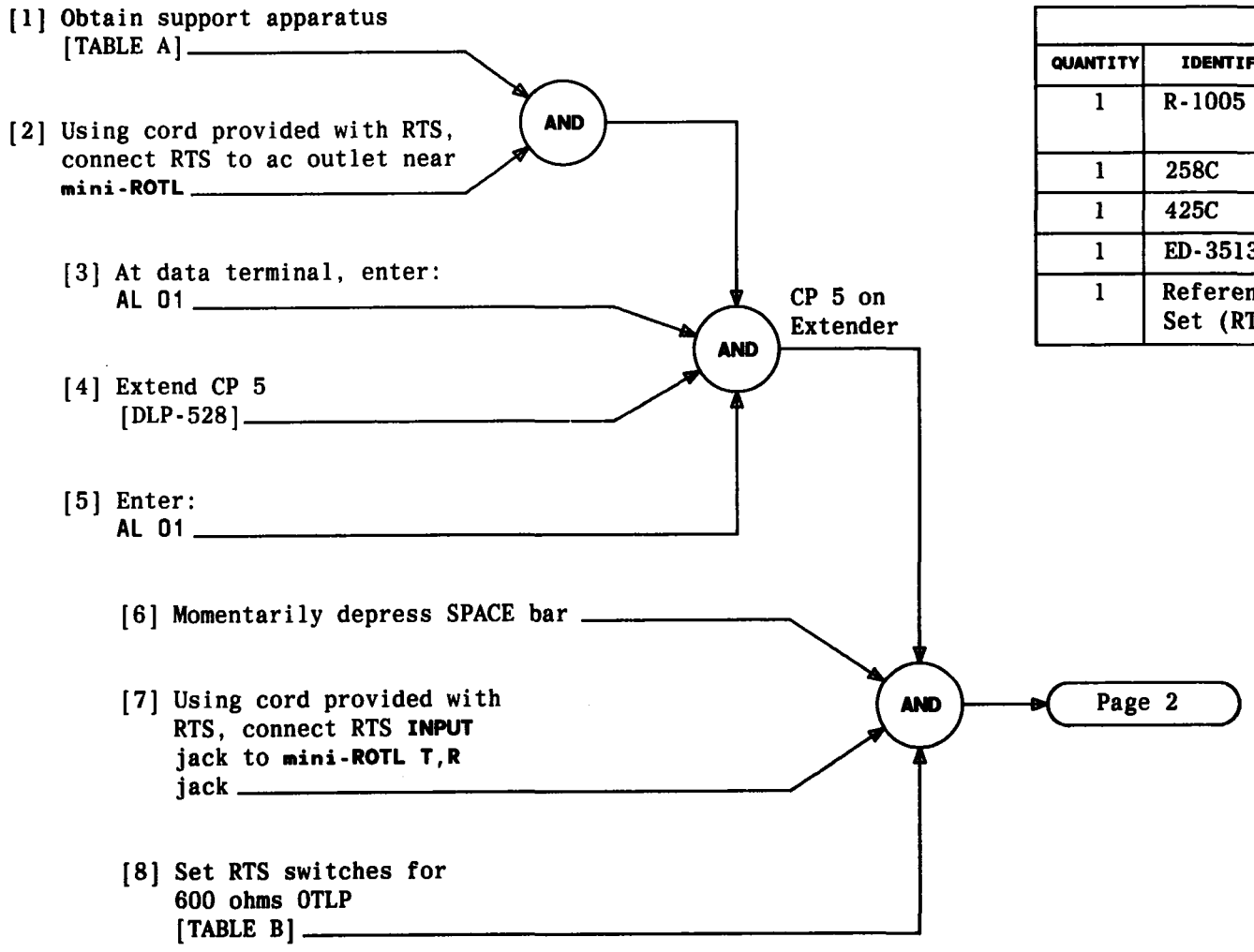

TABLE A

QUANTITY	IDENTIFICATION	DESCRIPTION
1	R-1005	Jeweler's Screwdriver Set
1	258C	Plastic Busy Plug
1	425C	Shorting Plug
1	ED-35136-30	Extender
1	Reference Level Test Set (RTS) WILCOM*T 105 B	

TABLE B

SWITCH	POSITION
METER RANGE	±.1DB
INPUT LEVEL	
–30 to +10	0
–9 to 0	0
–.9 to 0	0
INPUT	600 Ω DBM TERM
FUNCTION	MEAS INPUT
OUTPUT	OFF

* Registered trademark of Wilcom Products, Inc.

ALIGN RESPONDER

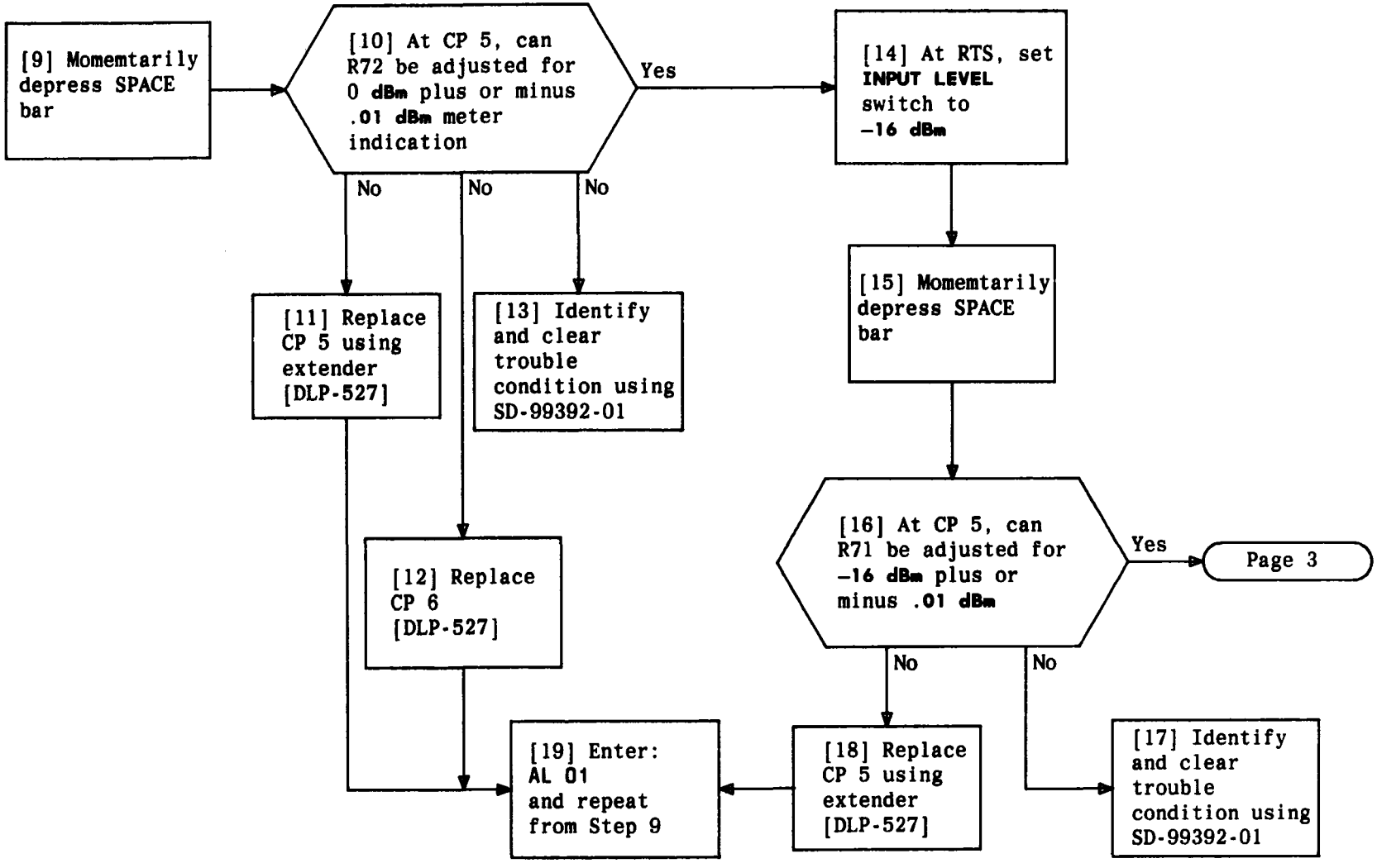

ALIGN RESPONDER

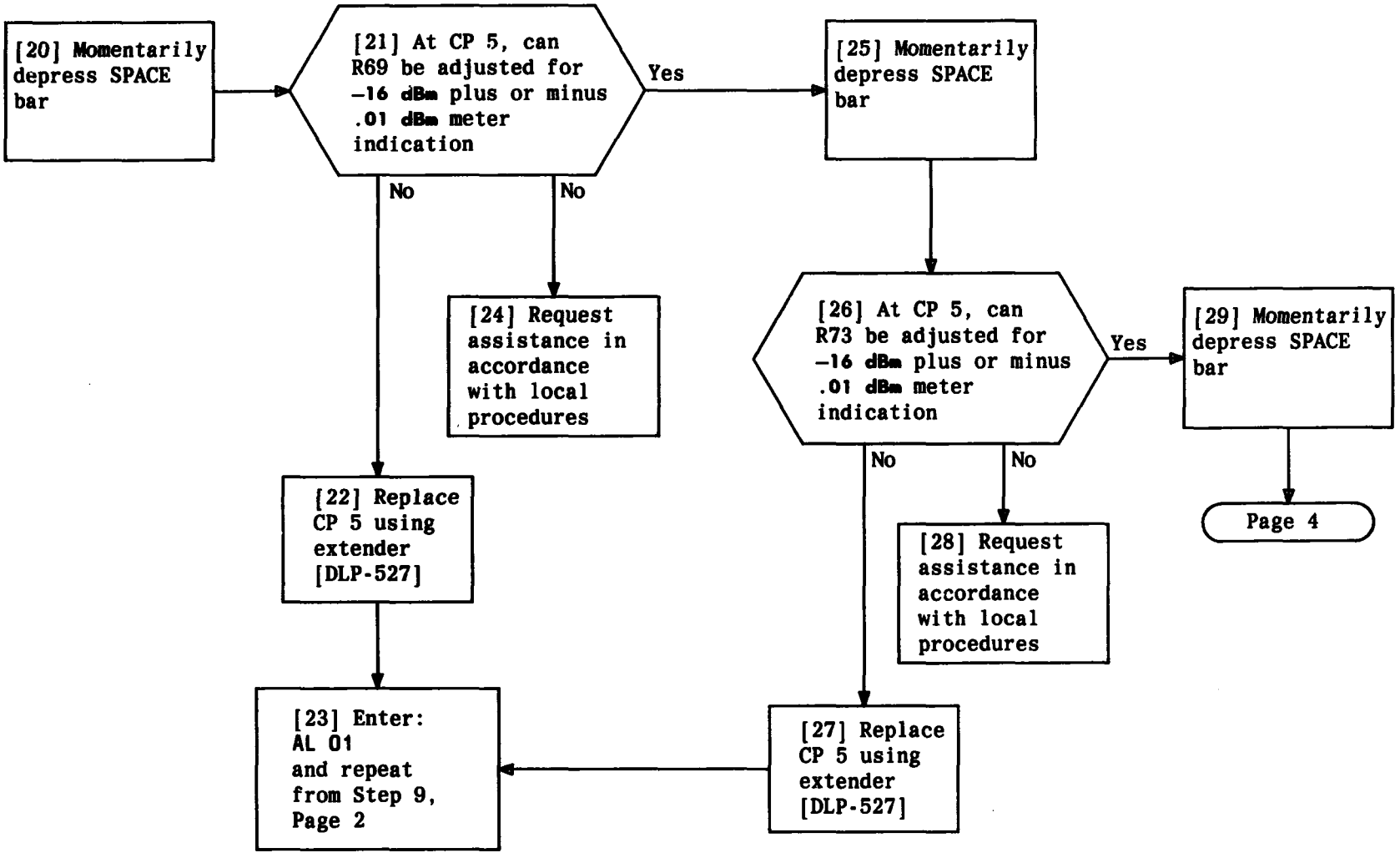
[20] Momentarily depress SPACE bar
[21] At CP 5, can R69 be adjusted for −16 dBm plus or minus .01 dBm meter indication
Yes
No
No
[24] Request assistance in accordance with local procedures
[22] Replace CP 5 using extender [DLP-527]
[23] Enter: AL 01 and repeat from Step 9, Page 2
[25] Momentarily depress SPACE bar
[26] At CP 5, can R73 be adjusted for −16 dBm plus or minus .01 dBm meter indication
Yes
No
No
[28] Request assistance in accordance with local procedures
[27] Replace CP 5 using extender [DLP-527]
[29] Momentarily depress SPACE bar
Page 4

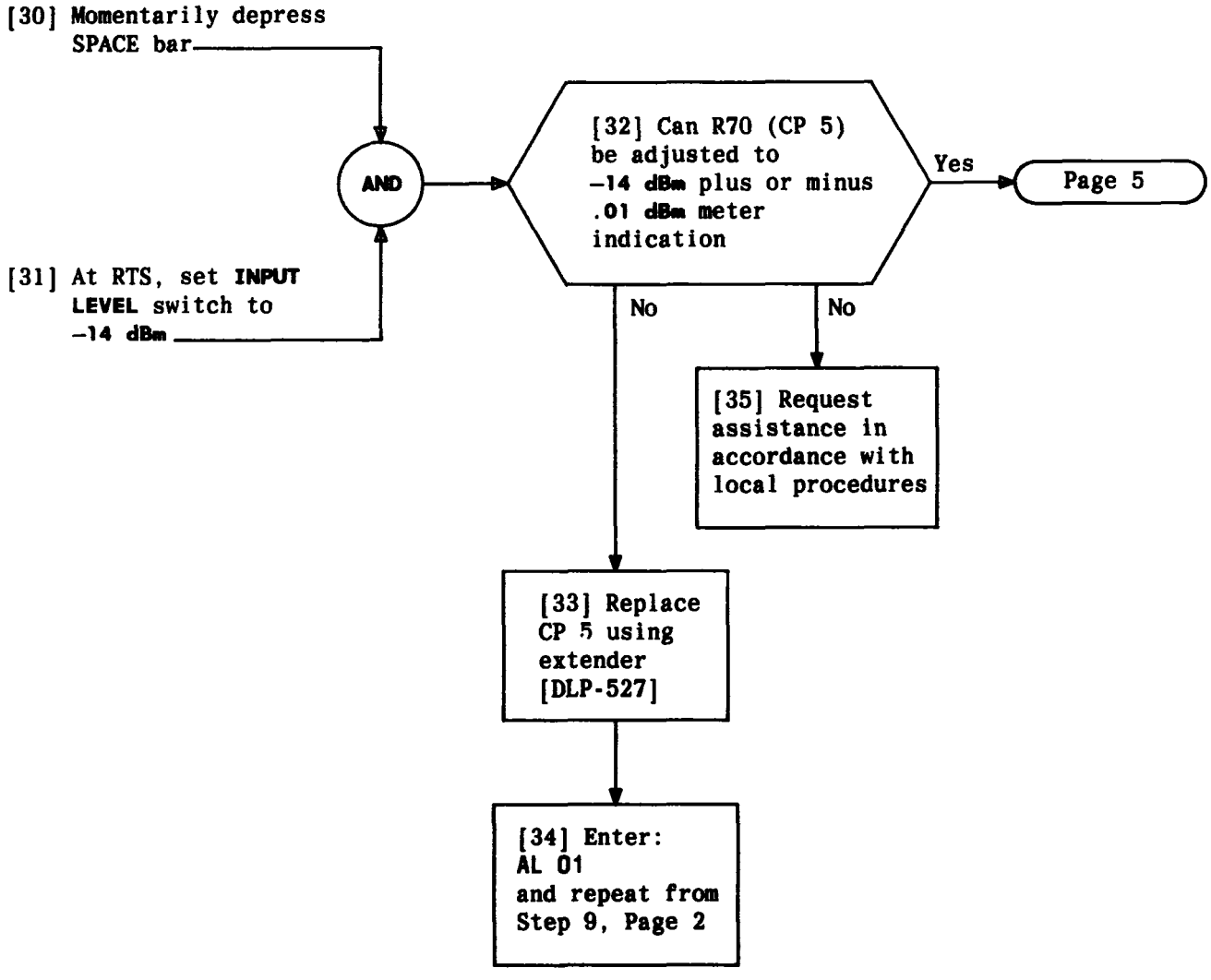
[30] Momentarily depress SPACE bar
AND
[31] At RTS, set INPUT LEVEL switch to −14 dBm
[32] Can R70 (CP 5) be adjusted to −14 dBm plus or minus .01 dBm meter indication
Yes
Page 5
No
No
[35] Request assistance in accordance with local procedures
[33] Replace CP 5 using extender [DLP-527]
[34] Enter: AL 01 and repeat from Step 9, Page 2

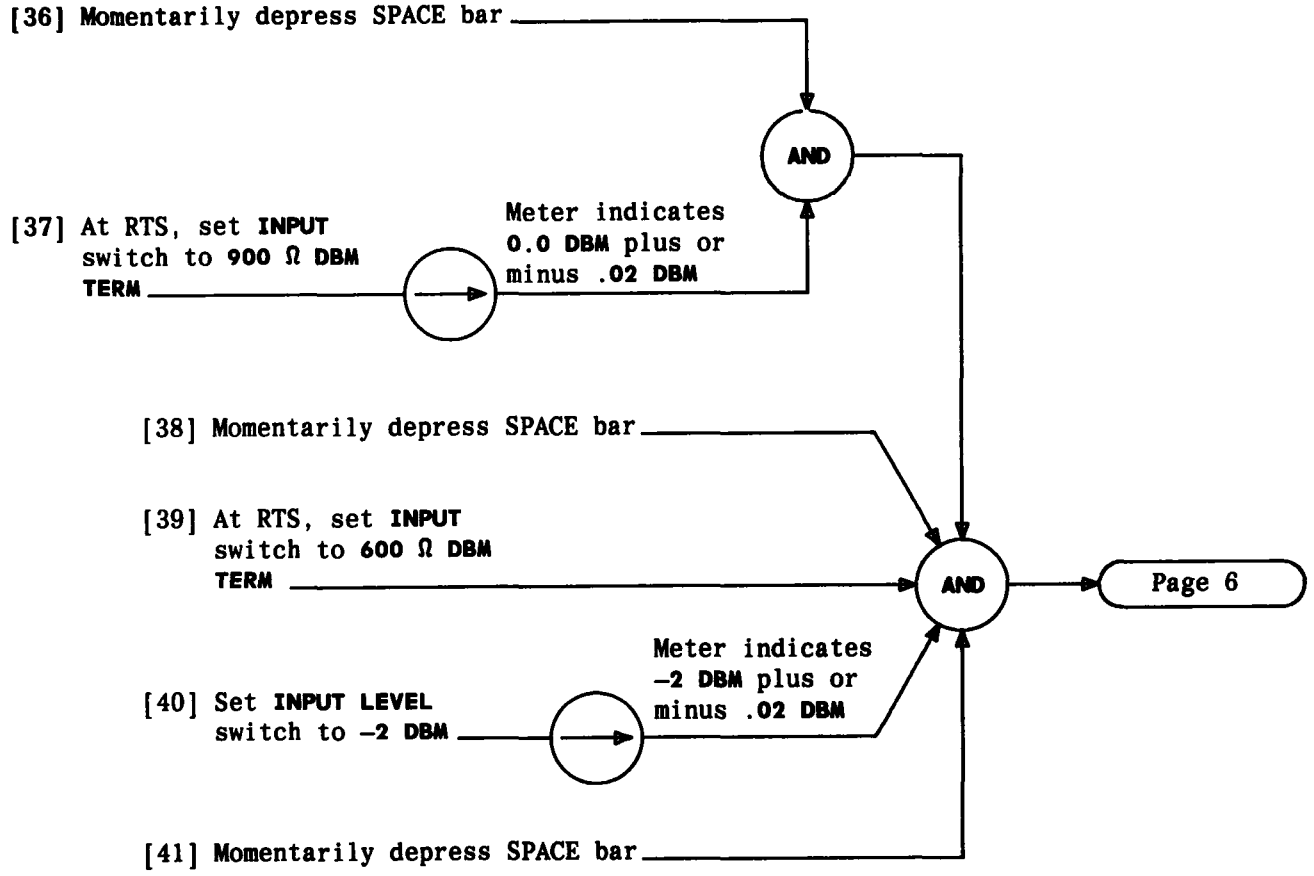

ALIGN RESPONDER

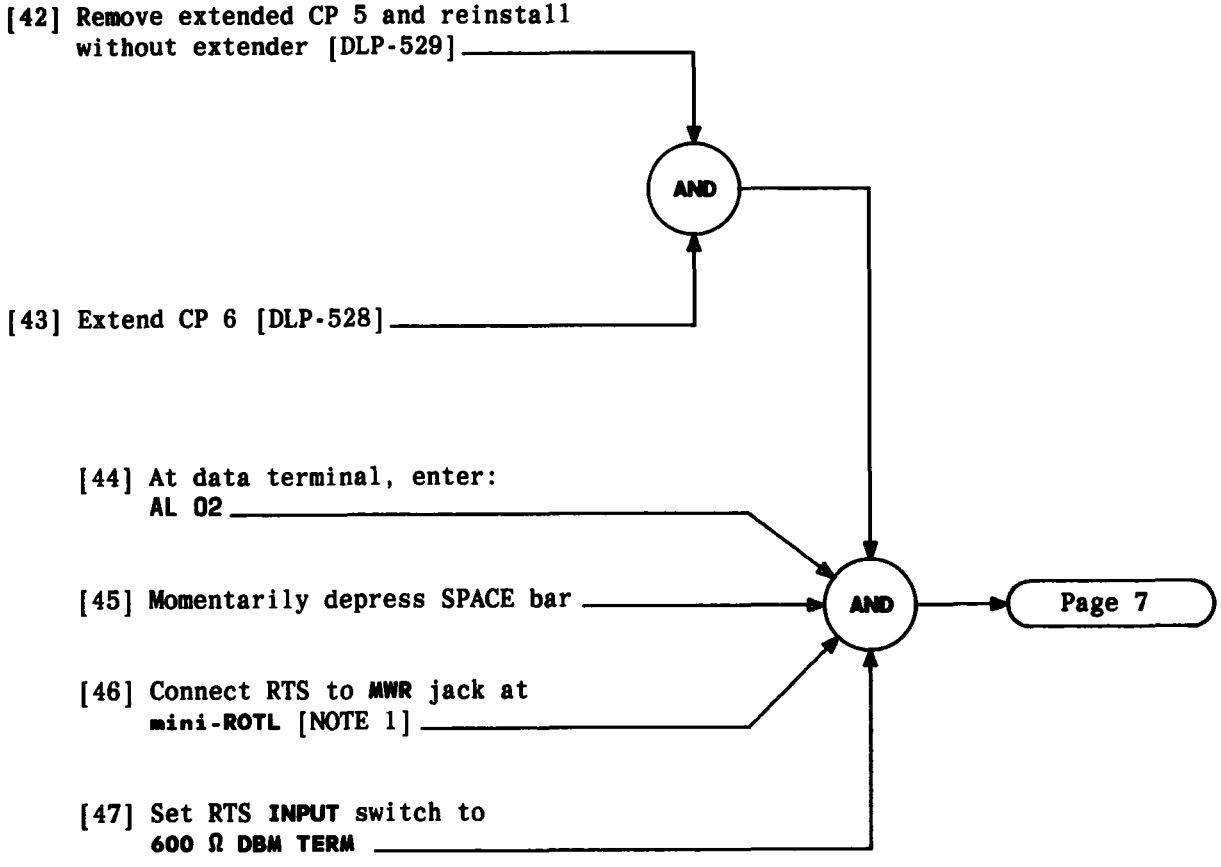

NOTE 1	
All connections between RTS and mini-ROTL jacks are made with low loss cord provided with RTS	
Issue 2	DEC 1983
233-142-110	TAP
PAGE 6 of 23	100

ALIGN RESPONDER

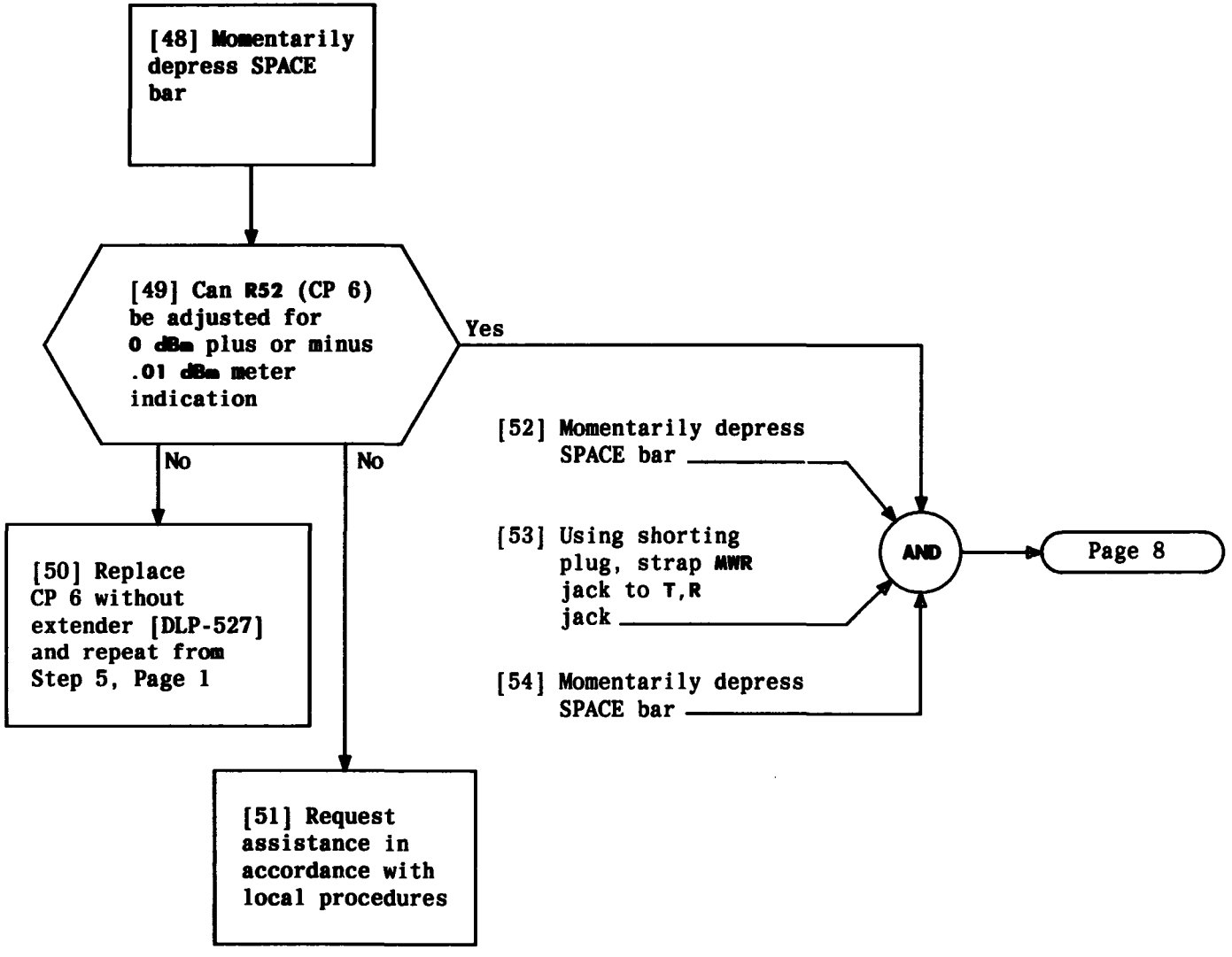

ALIGN RESPONDER

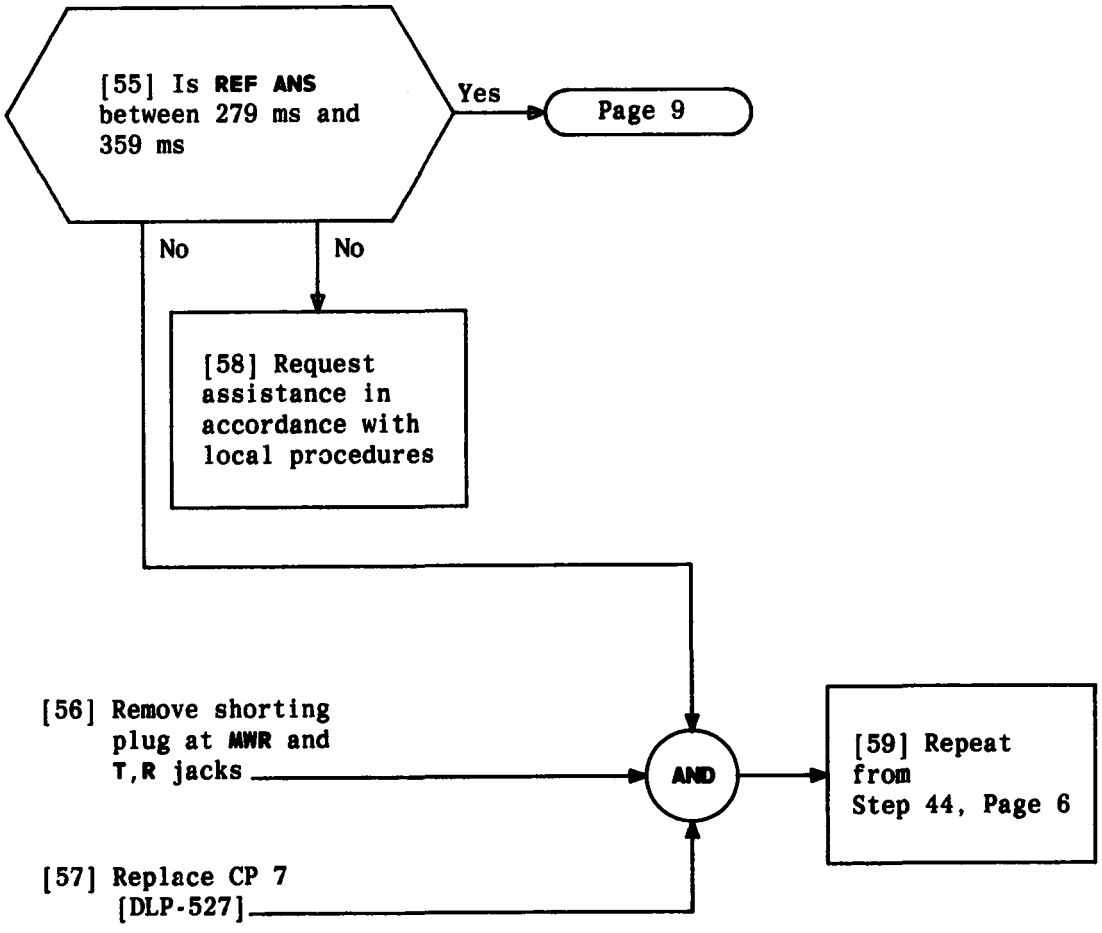

ALIGN RESPONDER

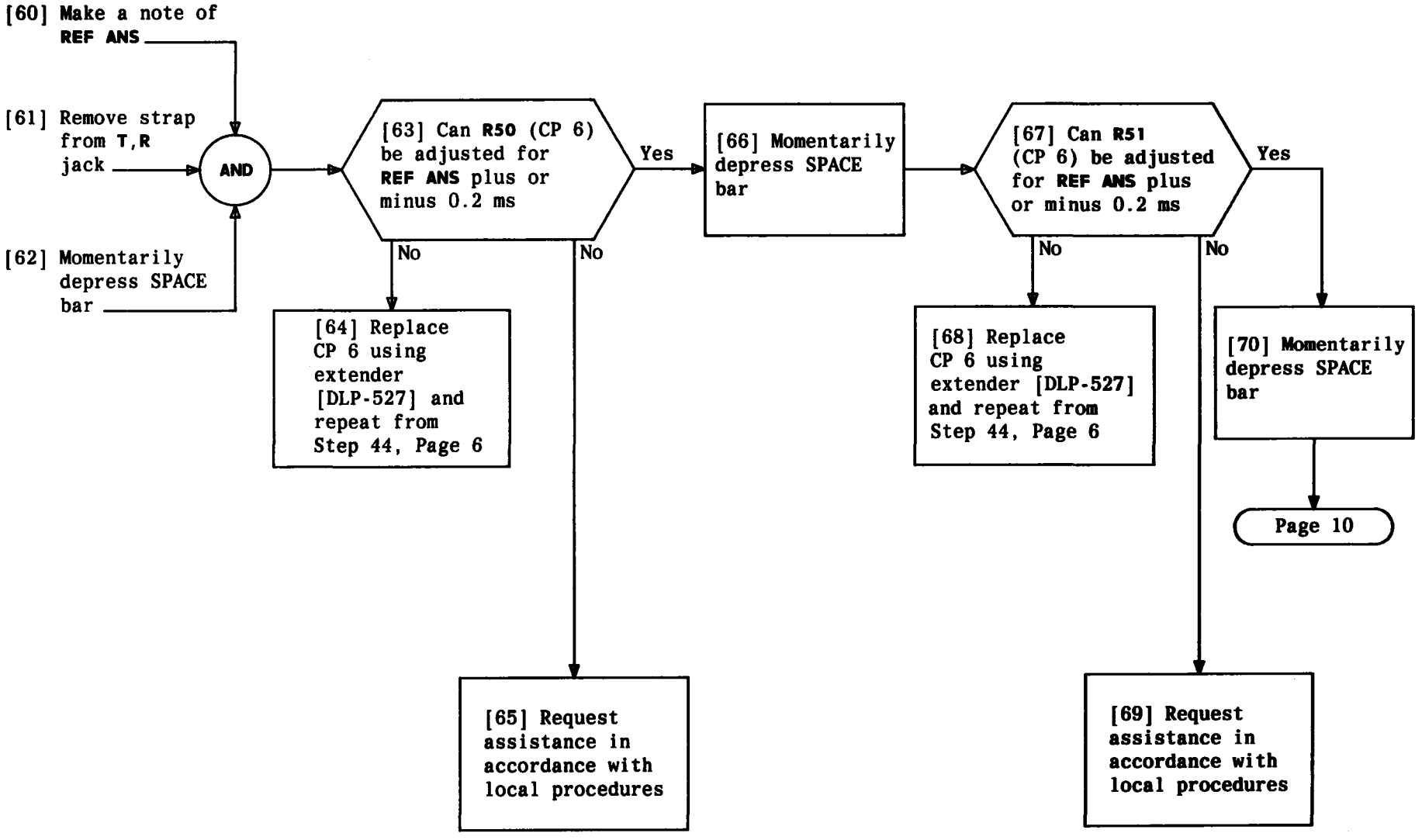

ALIGN RESPONDER

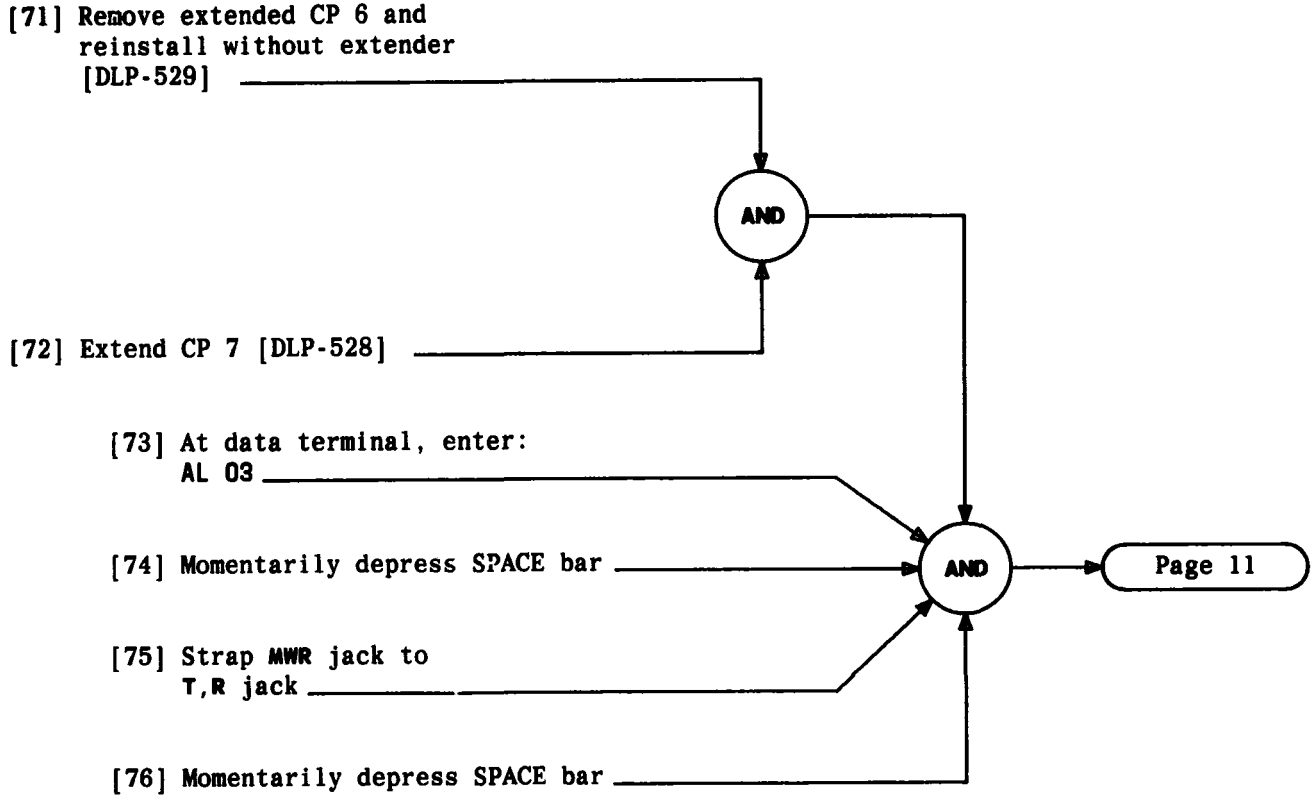

ALIGN RESPONDER

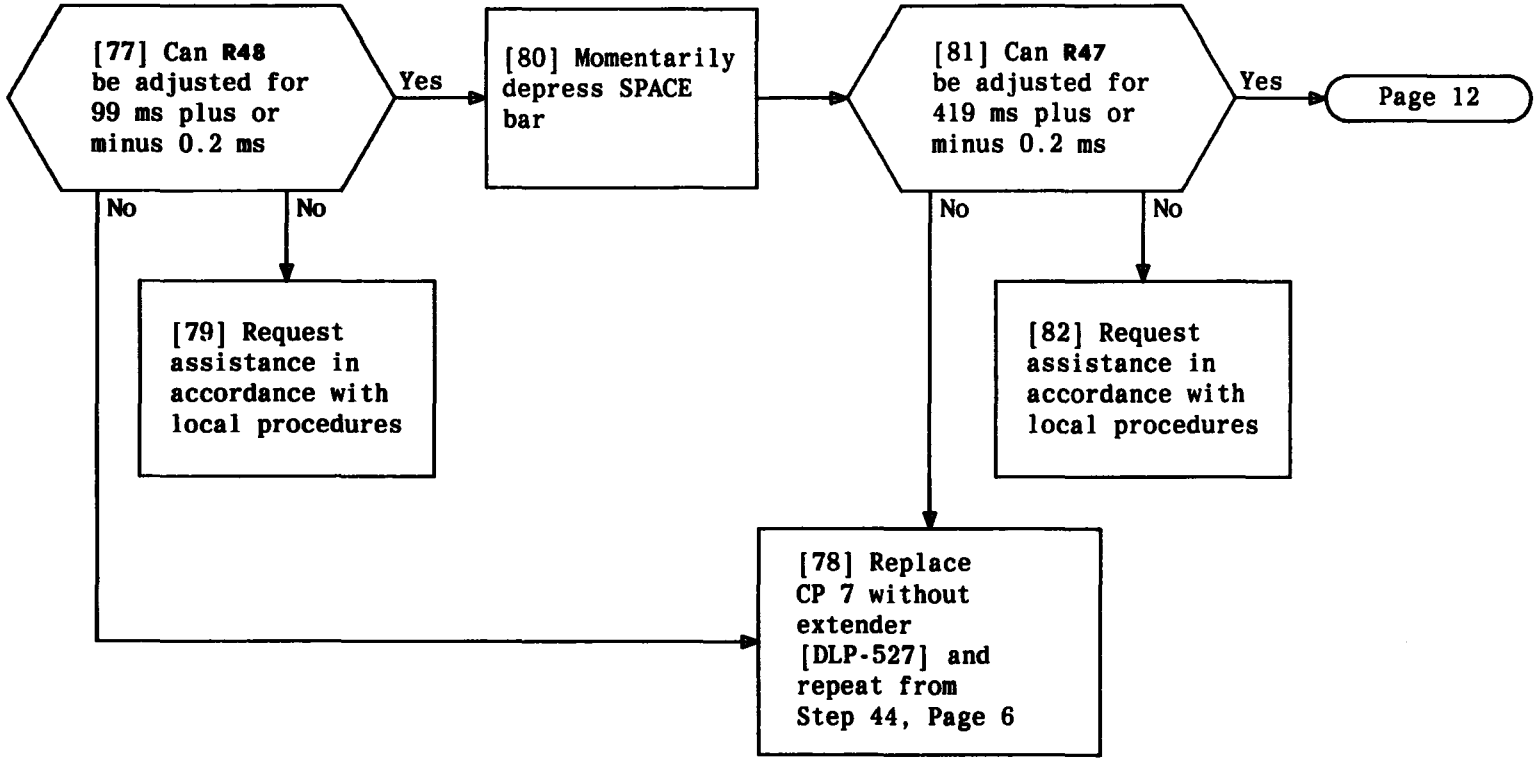
[77] Can R48 be adjusted for 99 ms plus or minus 0.2 ms
Yes
[80] Momentarily depress SPACE bar
[81] Can R47 be adjusted for 419 ms plus or minus 0.2 ms
Yes
Page 12
No
No
No
No
[79] Request assistance in accordance with local procedures
[82] Request assistance in accordance with local procedures
[78] Replace CP 7 without extender [DLP-527] and repeat from Step 44, Page 6

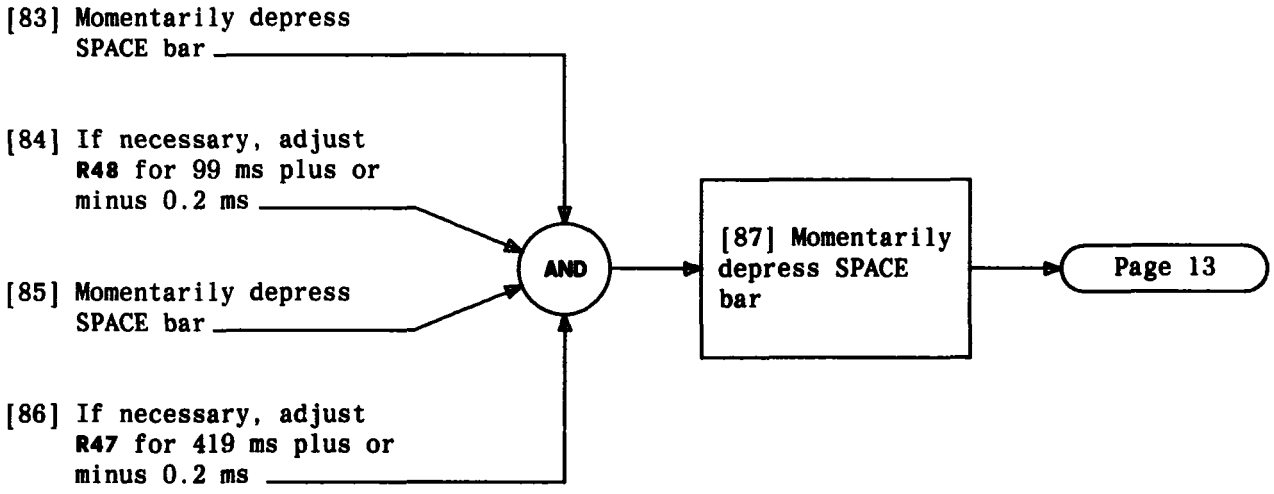

ALIGN RESPONDER

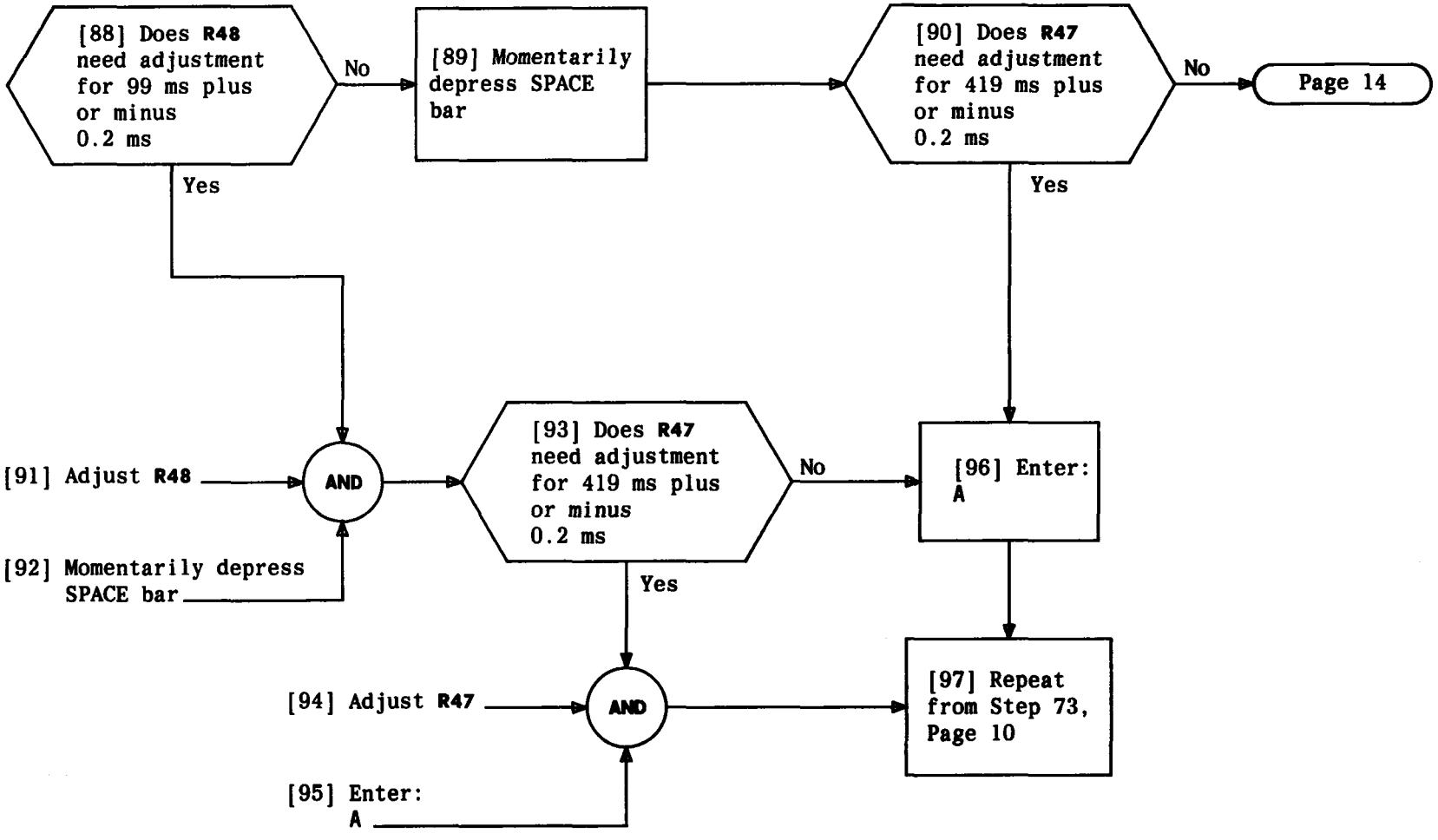

ALIGN RESPONDER

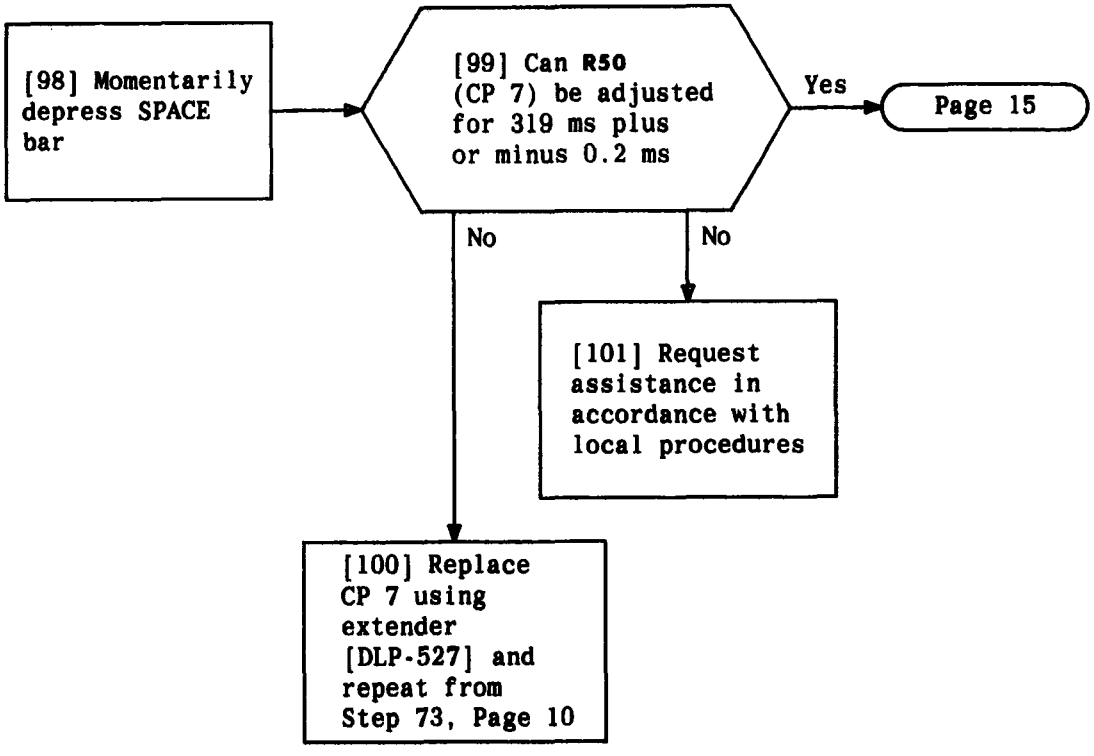

ALIGN RESPONDER

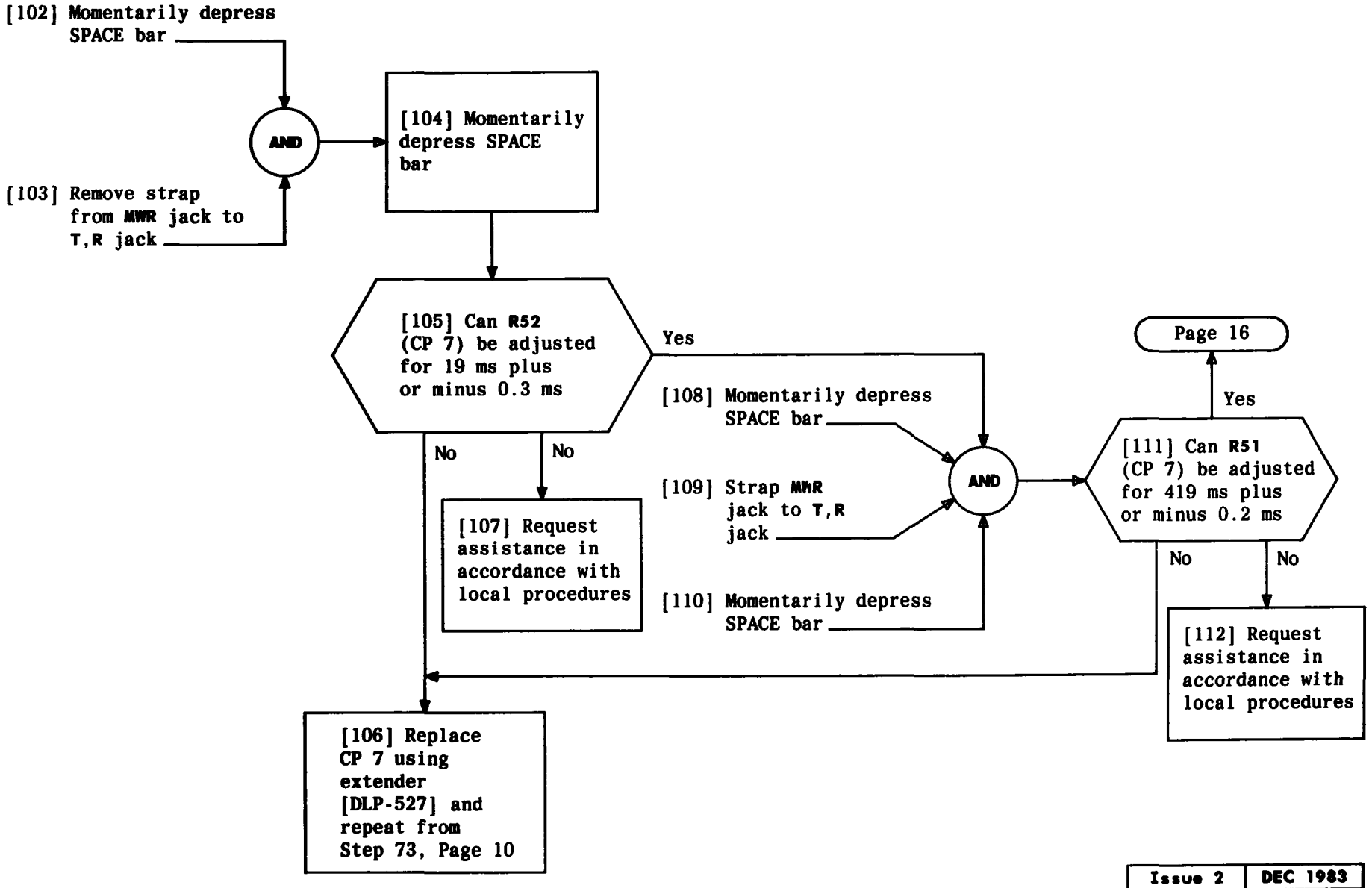

ALIGN RESPONDER

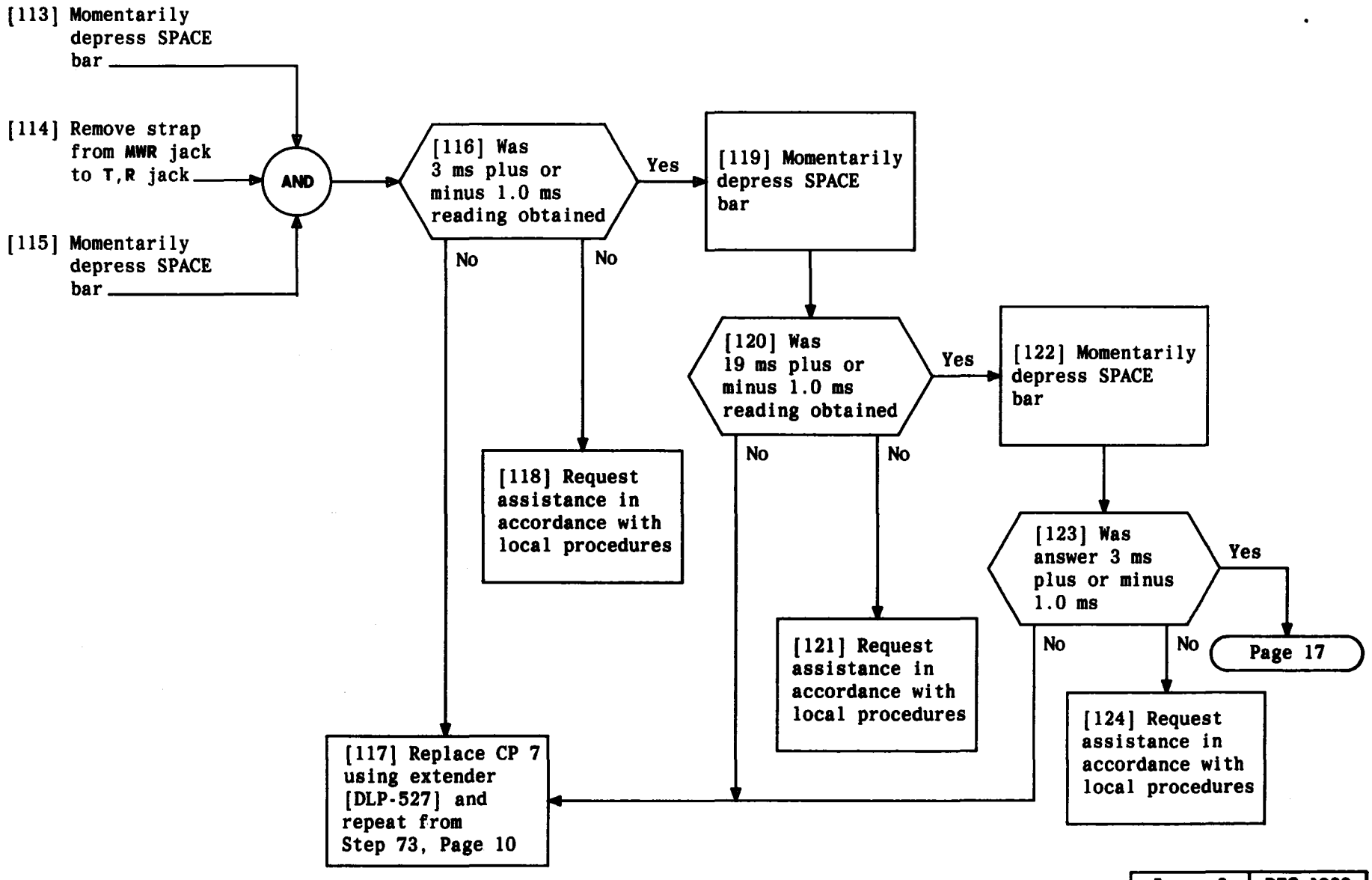

ALIGN RESPONDER

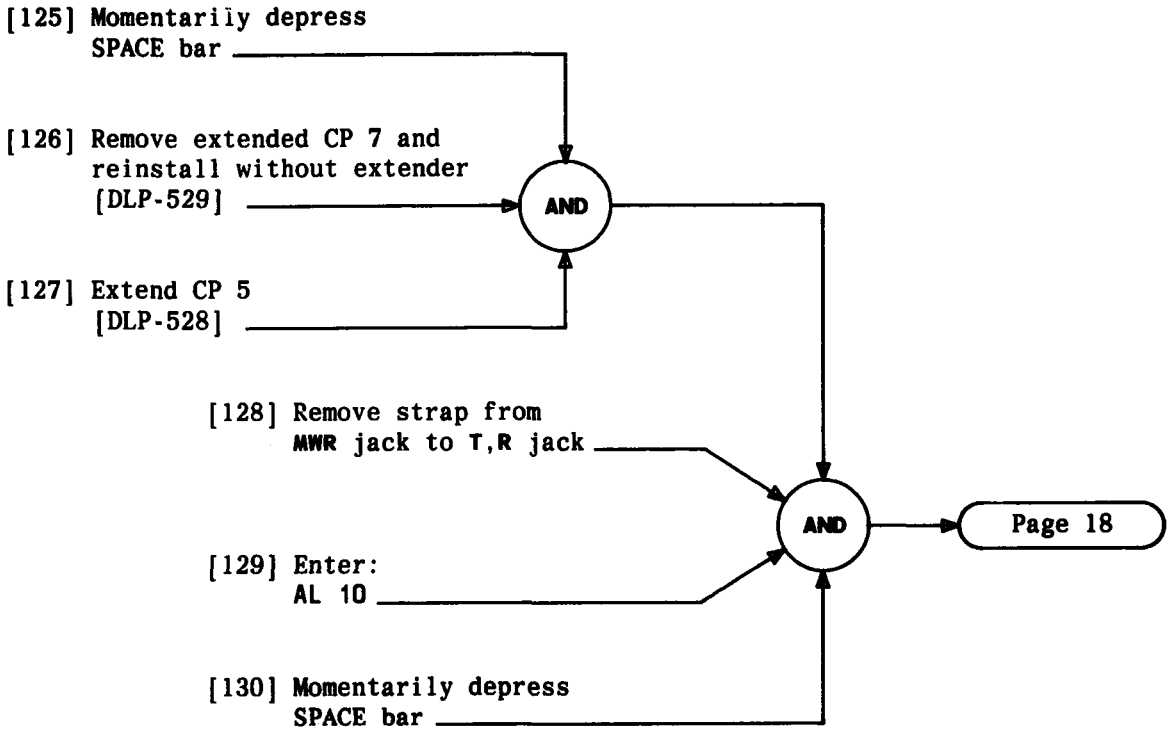

ALIGN RESPONDER

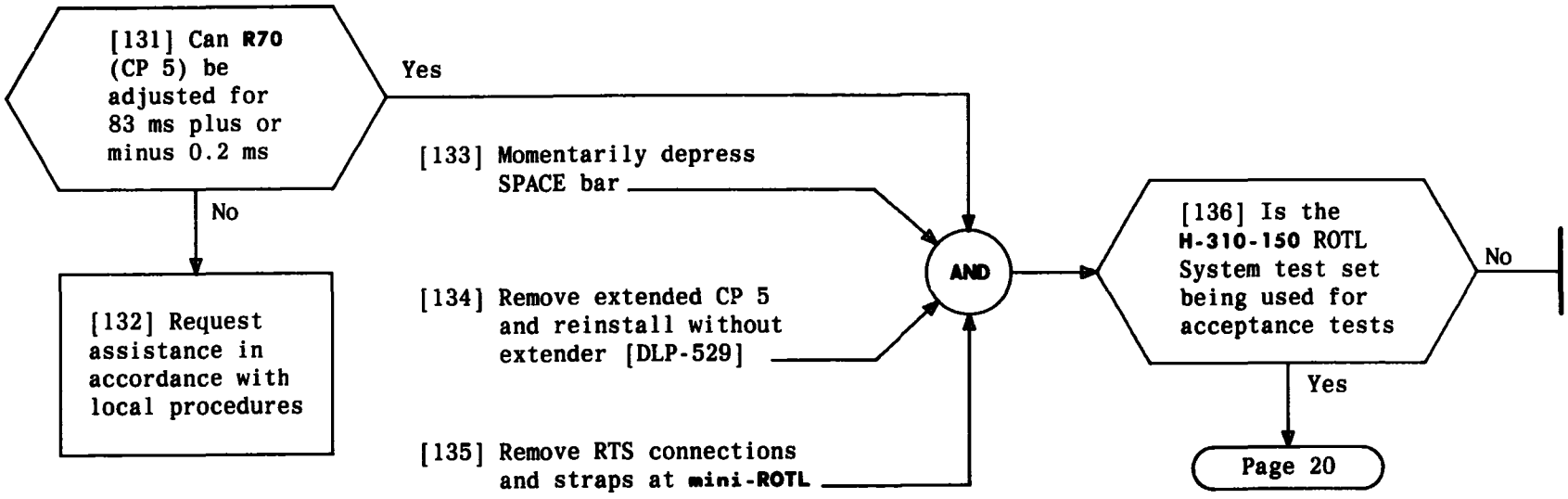

ALIGN RESPONDER

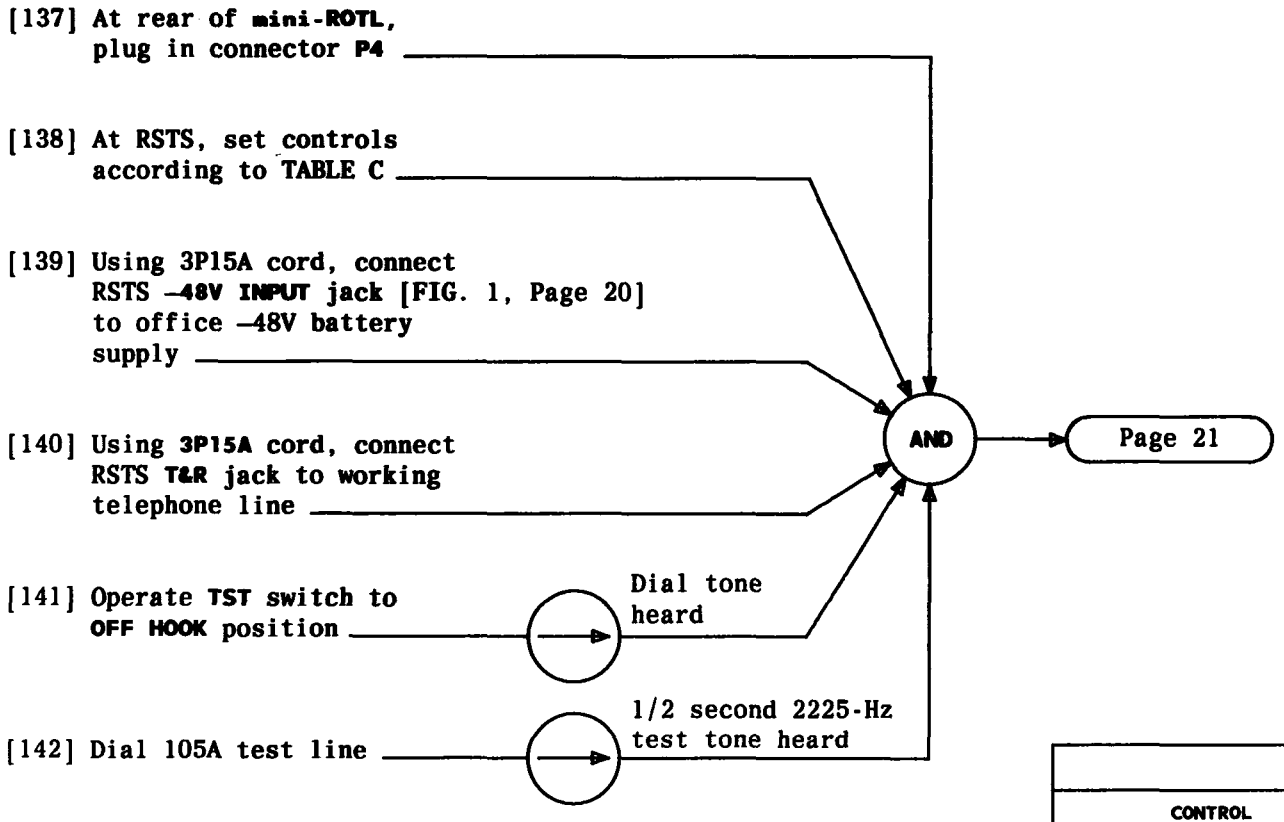

TABLE C	
CONTROL	POSITION
TEST PREPARATION	105-0-900
TEST REQUEST	SCK ALL
INTERROGATOR START	OFF
TST	ON HOOK
ROS	DIAL
SELECT	SMALL
DB INSERTION PADS	Normal (Nos. not visable)
VOL	Full clockwise

ALIGN RESPONDER

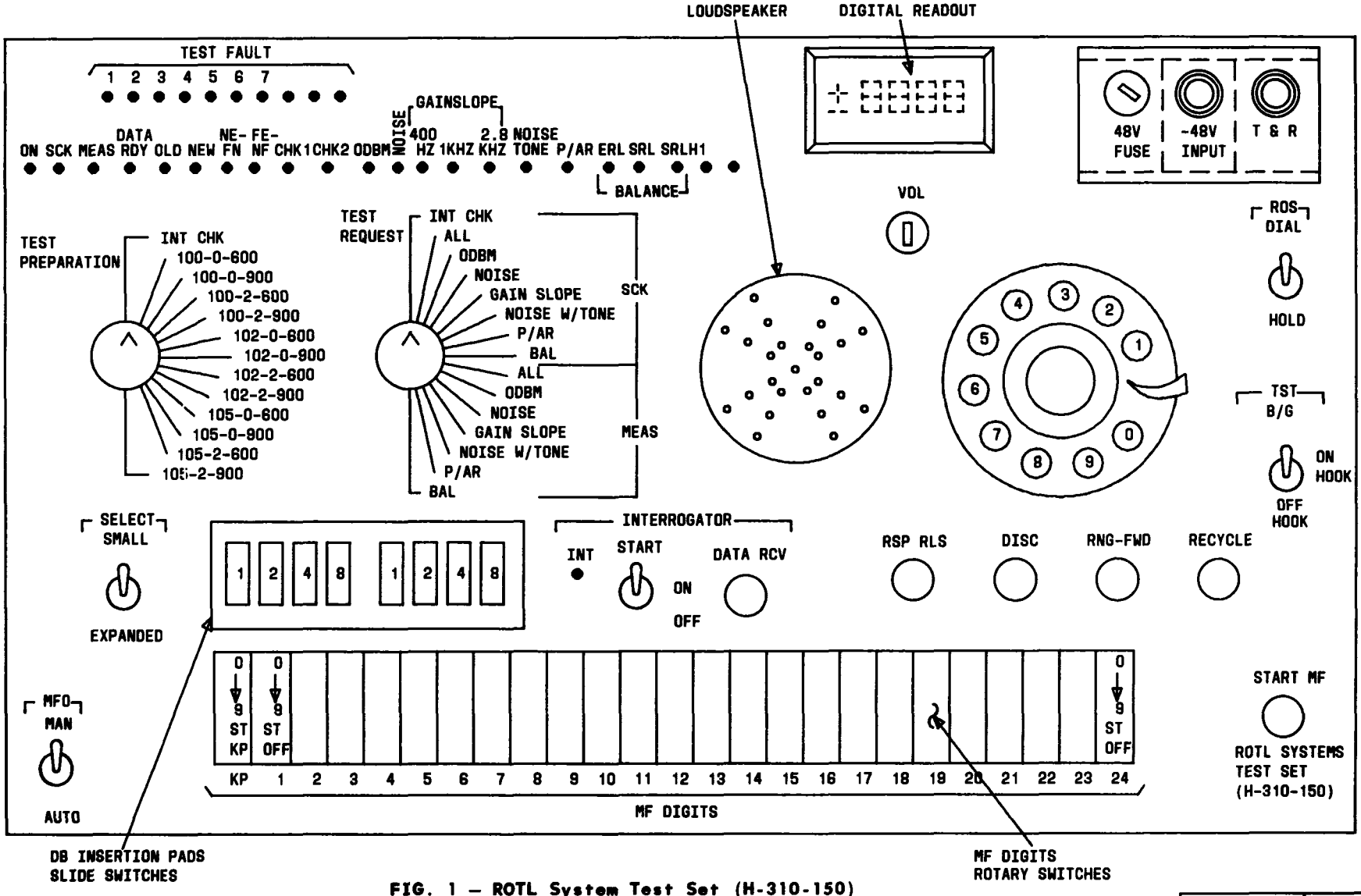

FIG. 1 – ROTL System Test Set (H-310-150)

ALIGN RESPONDER

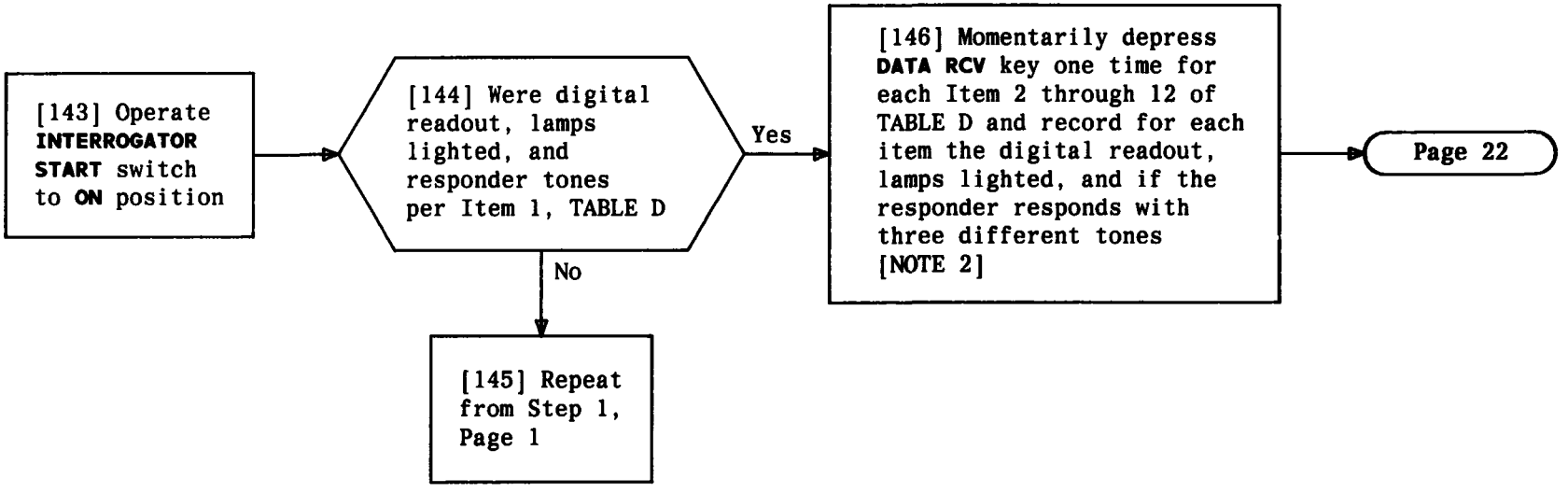

TABLE D

ITEM	DIGITAL READOUT	LAMPS LIGHTED	RESPONDER ANSWERS WITH THREE TONES
1	+00.0	ON,SCK,DATA RDY,NEW,N-E F-N,ODBM	Yes
2	–00.0	ON,SCK,NEW,F-E N-F,ODBM	No
3	–000	ON,SCK,NEW,N-E F-N,NOISE	No
4	+000	ON,SCK,DATA RDY,NEW,F-E N-F,NOISE	Yes
5	+00.0	ON,SCK,DATA RDY,NEW,N-E F-N,400 HZ	Yes
6	–00.0	ON,SCK,NEW,F-E N-F,400 HZ	No
7	+00.0	ON,SCK,DATA RDY,NEW,N-E F-N,1K HZ	Yes
8	–00.0	ON,SCK,NEW,F-E N-F,1K HZ	No
9	+00.0	ON,SCK,DATA RDY,NEW,N-E F-N,2.8K HZ	Yes
10	–00.0	On,SCK,NEW,F-E N-F,2.8K HZ	Yes
11	+00.0	ON,SCK,DATA RDY,NEW,N-E F-N,NOISE TONE	Yes
12	–00.0	ON,SCK,DATA RDY,NEW,F-E N-F,NOISE TONE	No

NOTE 2
If the responder times out, then the 105A test line would have to be redialed (Step 142)

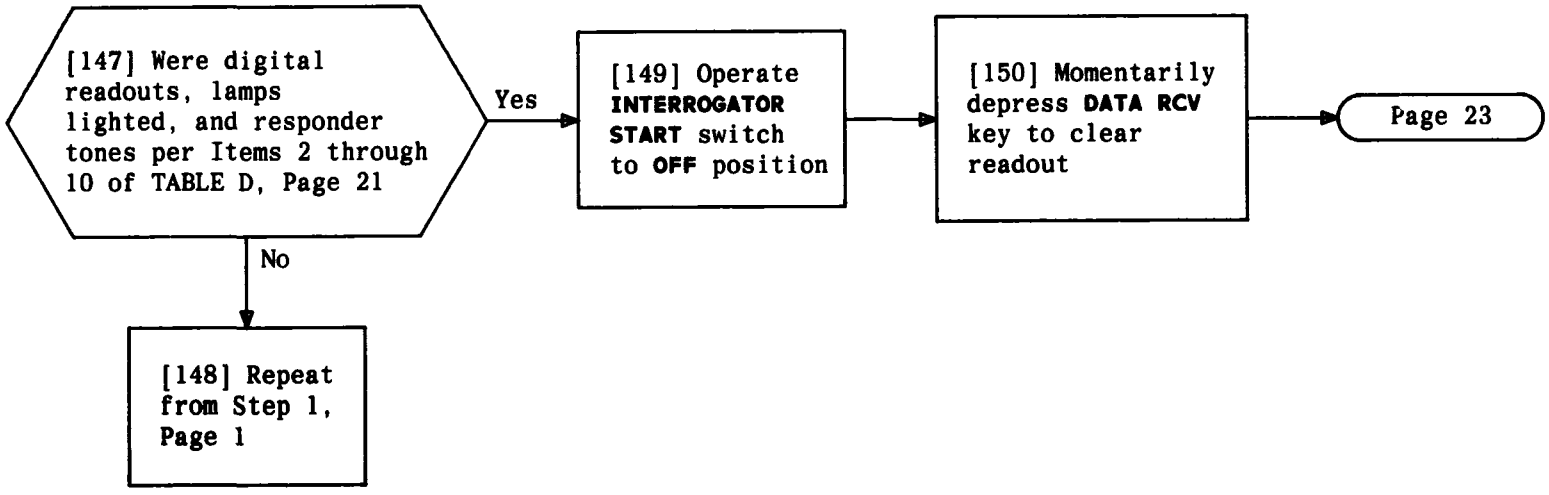
[147] Were digital readouts, lamps lighted, and responder tones per Items 2 through 10 of TABLE D, Page 21
Yes
No
[148] Repeat from Step 1, Page 1
[149] Operate **INTERROGATOR START** switch to **OFF** position
[150] Momentarily depress **DATA RCV** key to clear readout
Page 23

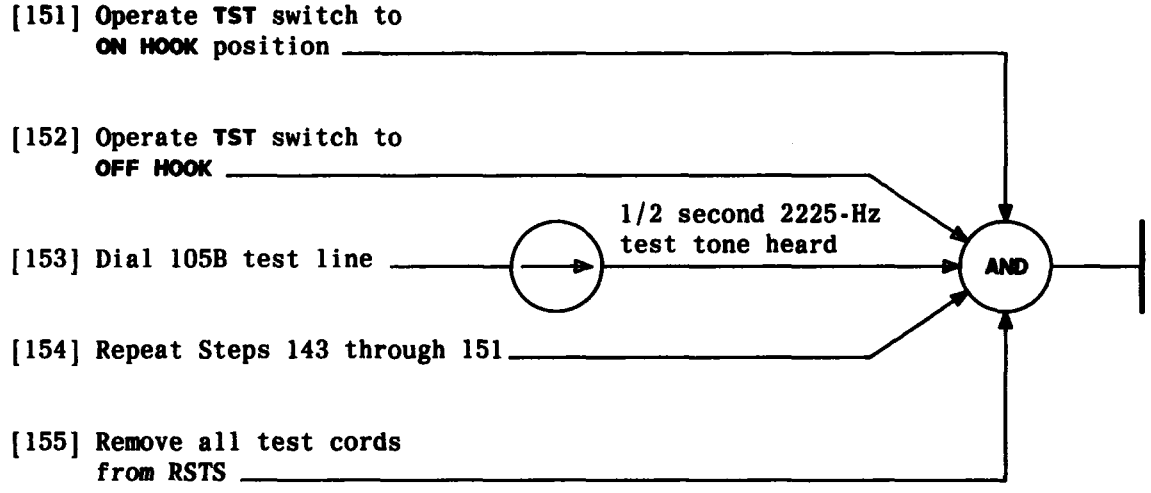
[151] Operate TST switch to ON HOOK position
[152] Operate TST switch to OFF HOOK
[153] Dial 105B test line
1/2 second 2225-Hz test tone heard
AND
[154] Repeat Steps 143 through 151
[155] Remove all test cords from RSTS

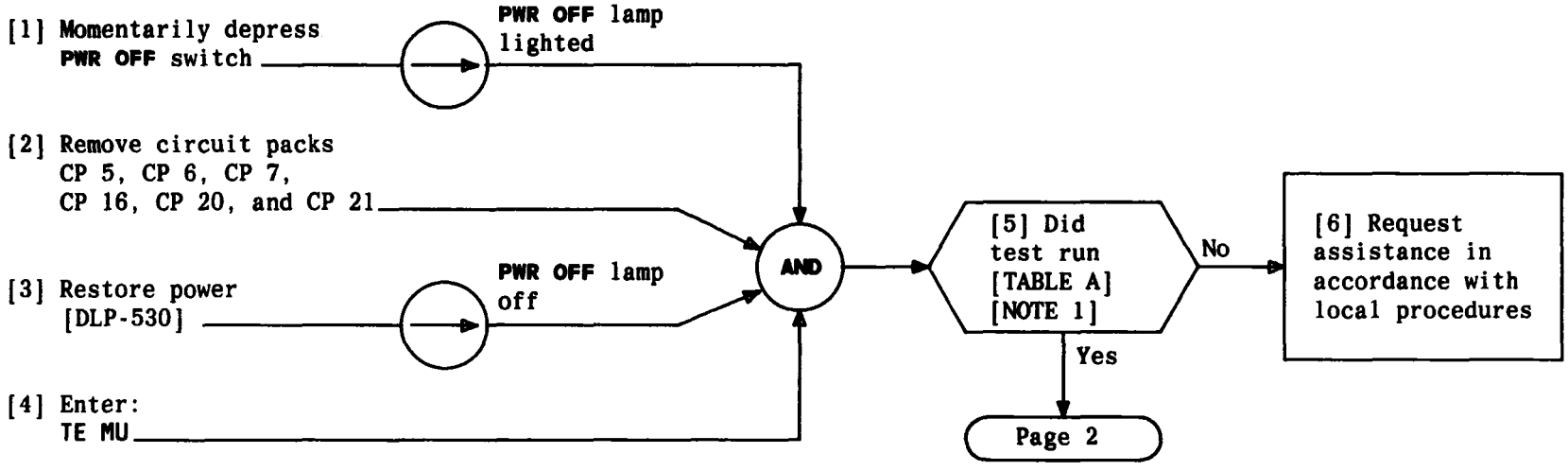

TABLE A

EXPECTED PRINTOUT	TROUBLE INDICATION	REPLACEMENT CIRCUIT PACK
01 IS AN INOPERATIVE PORT 02 IS AN INOPERATIVE PORT 03 IS AN INOPERATIVE PORT 04 IS AN OK PORT 05 IS AN OK PORT 06 IS AN INOPERATIVE PORT 07 IS AN INOPERATIVE PORT 08 IS AN INOPERATIVE PORT 09 IS AN INOPERATIVE PORT 10 IS AN INOPERATIVE PORT	PORT 5 INOPERATIVE	CP 12
11 IS AN OK PORT 12 IS AN INOPERATIVE PORT 13 IS AN INOPERATIVE PORT 14 IS AN INOPERATIVE PORT 15 IS AN INOPERATIVE PORT	PORT 11 INOPERATIVE	CP 17
–	All ports inoperative	CP 18 (or CP 38), CP 14 (or CP 36)

NOTE 1
Port 04 indicates an OK port because CP 15 is not removed

CLEAR MULTIPLEX DIAGNOSTIC TEST TROUBLE – TEST WILL NOT RUN

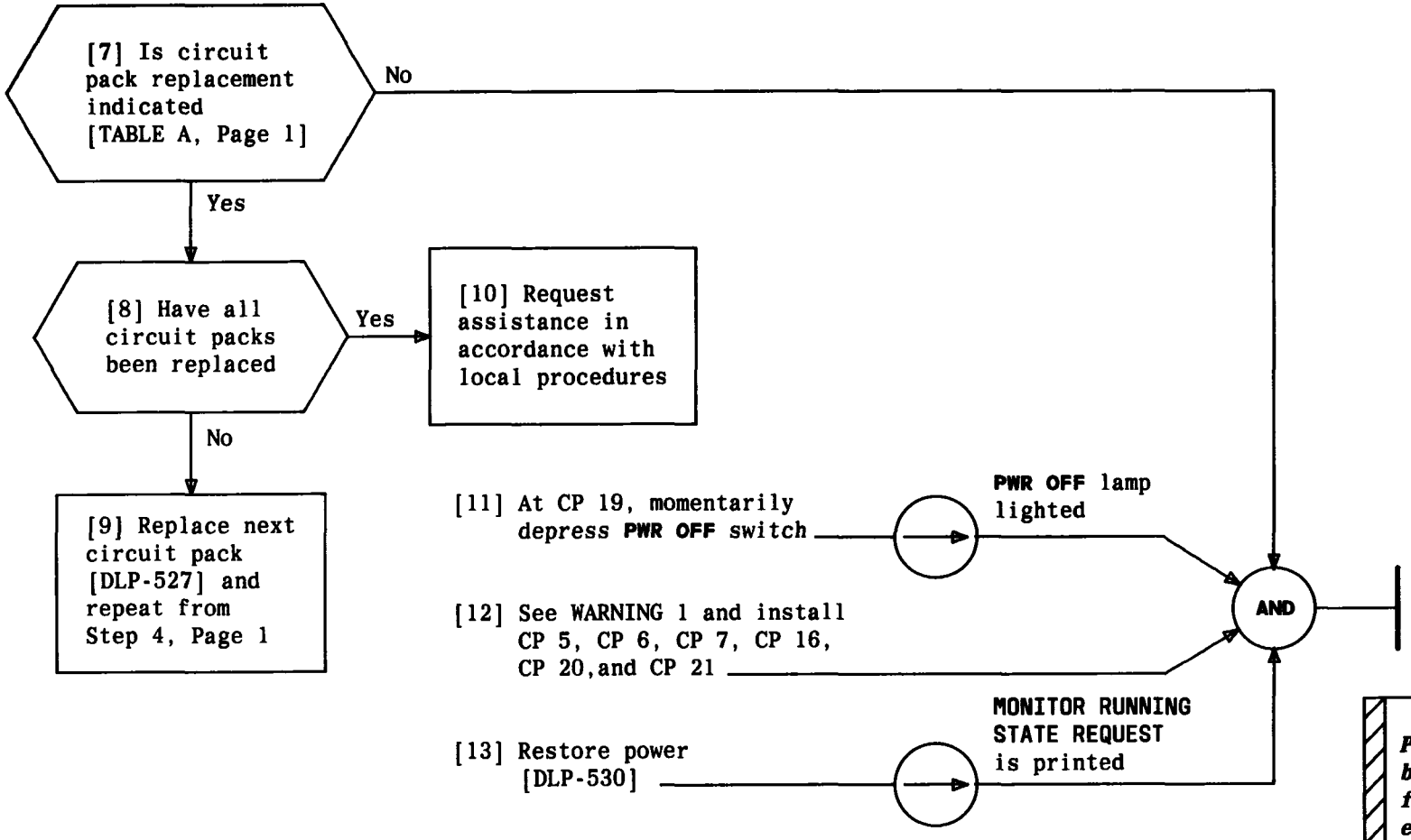

WARNING 1
Pins in the backplane are fragile and easily bent. The circuit pack should slide smoothly with perceptible tension as the pins and connector engage

CLEAR MULTIPLEX DIAGNOSTIC TEST TROUBLE — TEST WILL NOT RUN

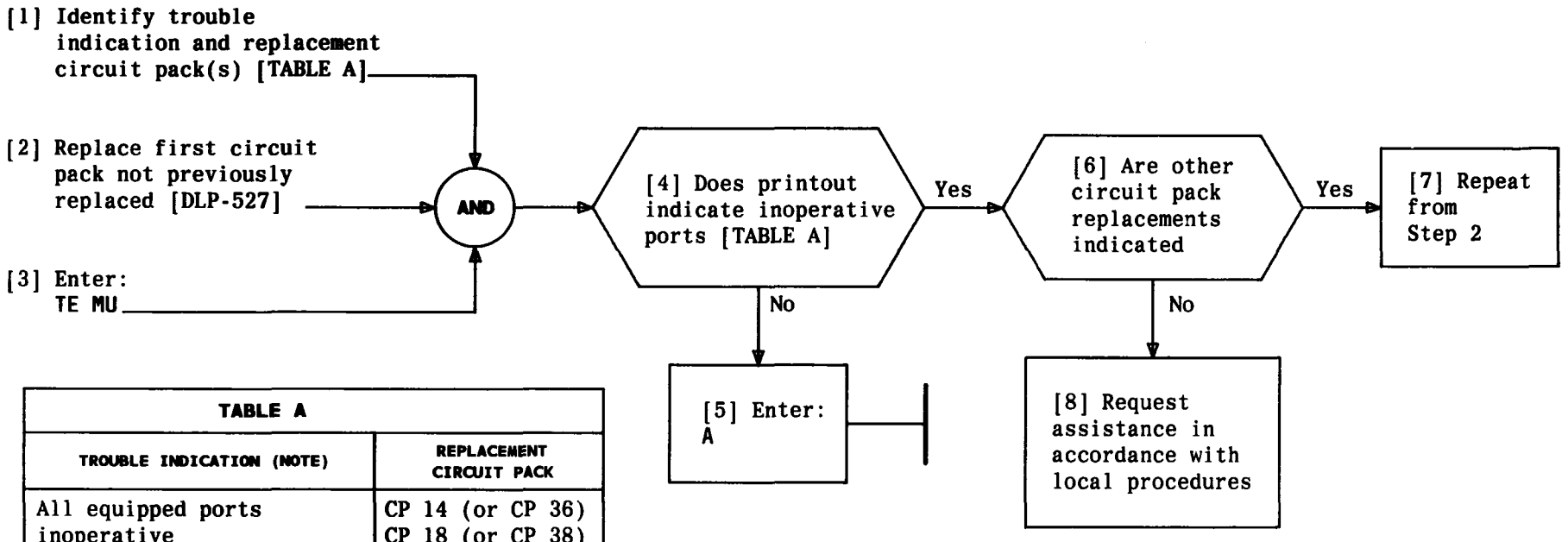

TABLE A

TROUBLE INDICATION (NOTE)	REPLACEMENT CIRCUIT PACK
All equipped ports inoperative	CP 14 (or CP 36) CP 18 (or CP 38)
Some but not all equipped ports inoperative	
01 IS AN INOPERATIVE PORT	CP 5
02 IS AN INOPERATIVE PORT	CP 6
03 IS AN INOPERATIVE PORT	CP 6
04 IS AN INOPERATIVE PORT	CP 15
05 IS AN INOPERATIVE PORT	CP 12
07 IS AN INOPERATIVE PORT	CP 16
08 IS AN INOPERATIVE PORT	CP 21
11 IS AN INOPERATIVE PORT	CP 17
12 IS AN INOPERATIVE PORT	CP 7
13 IS AN INOPERATIVE PORT	CP 7

NOTE: Inoperative ports 6, 9, 10, 14, and 15 are OK. They are not equipped.

CLEAR MULTIPLEX DIAGNOSTIC TEST TROUBLE – INOPERATIVE PORTS

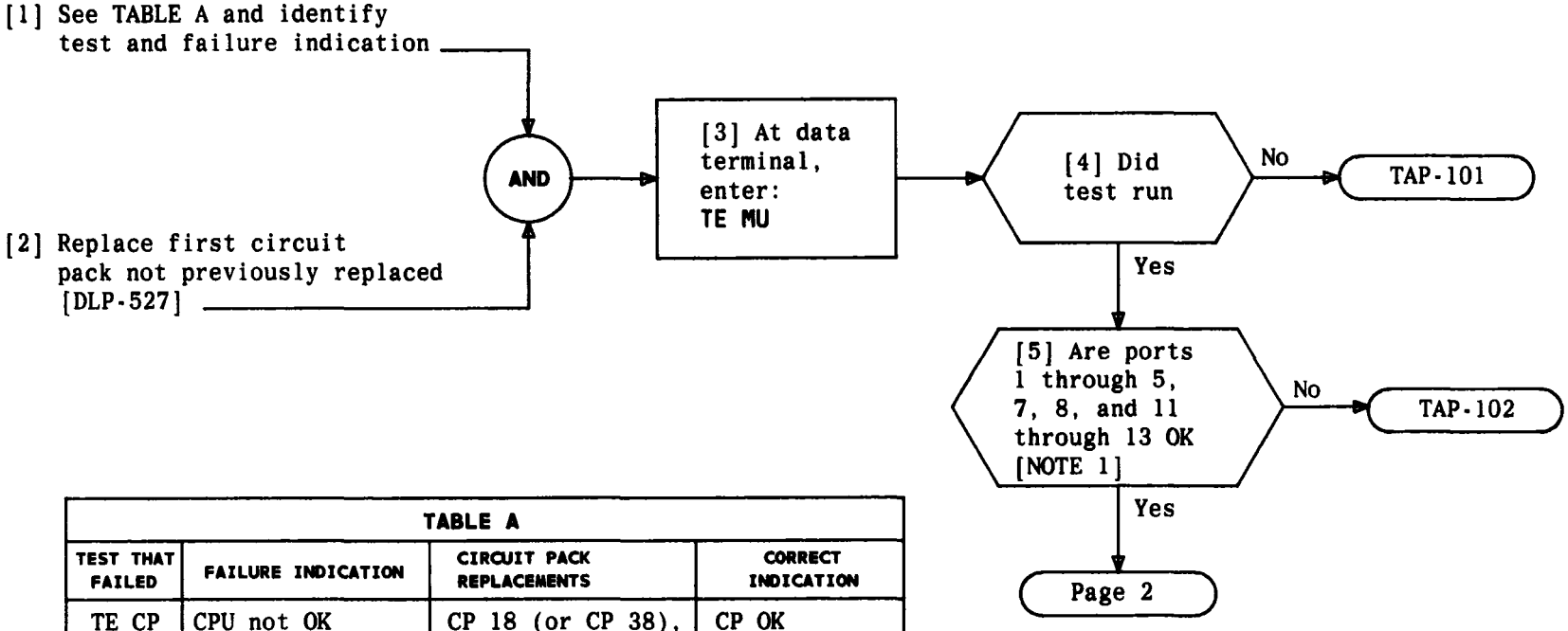

TABLE A

TEST THAT FAILED	FAILURE INDICATION	CIRCUIT PACK REPLACEMENTS	CORRECT INDICATION
TE CP	CPU not OK	CP 18 (or CP 38), CP 14 (or CP 36)	CP OK
TE DC	CHECKSUM not OK	CP 14 (or CP 36)	CHECKSUM OK
TE RC	CHECKSUM not OK	CP 14 (or CP 36)	CHECKSUM OK
TE RA	RAM not OK	CP 18 (or CP 38), CP 14 (or CP 36)	RAM OK

NOTE 1
If ports 1 through 5, 7, 8, and 11 through 13 are OK, MONITOR RUNNING STATE REQUEST is printed

CLEAR DIAGNOSTIC TEST TROUBLE BY CIRCUIT PACK REPLACEMENT

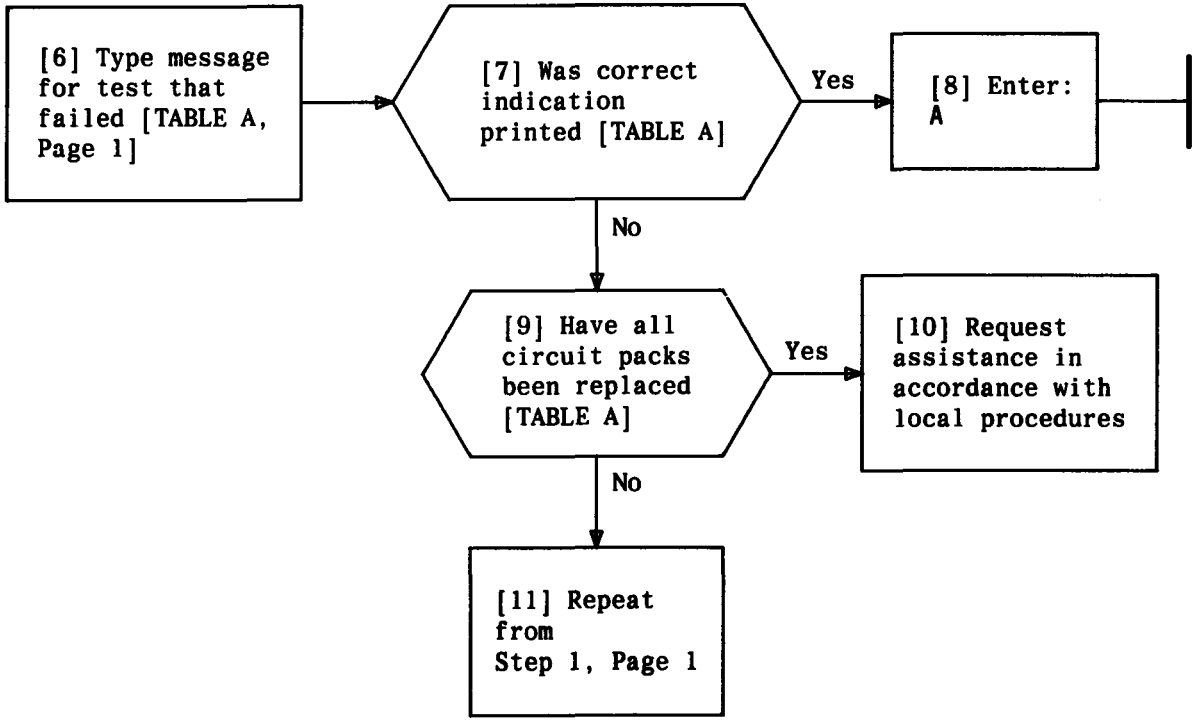

CLEAR DIAGNOSTIC TEST TROUBLE BY CIRCUIT PACK REPLACEMENT

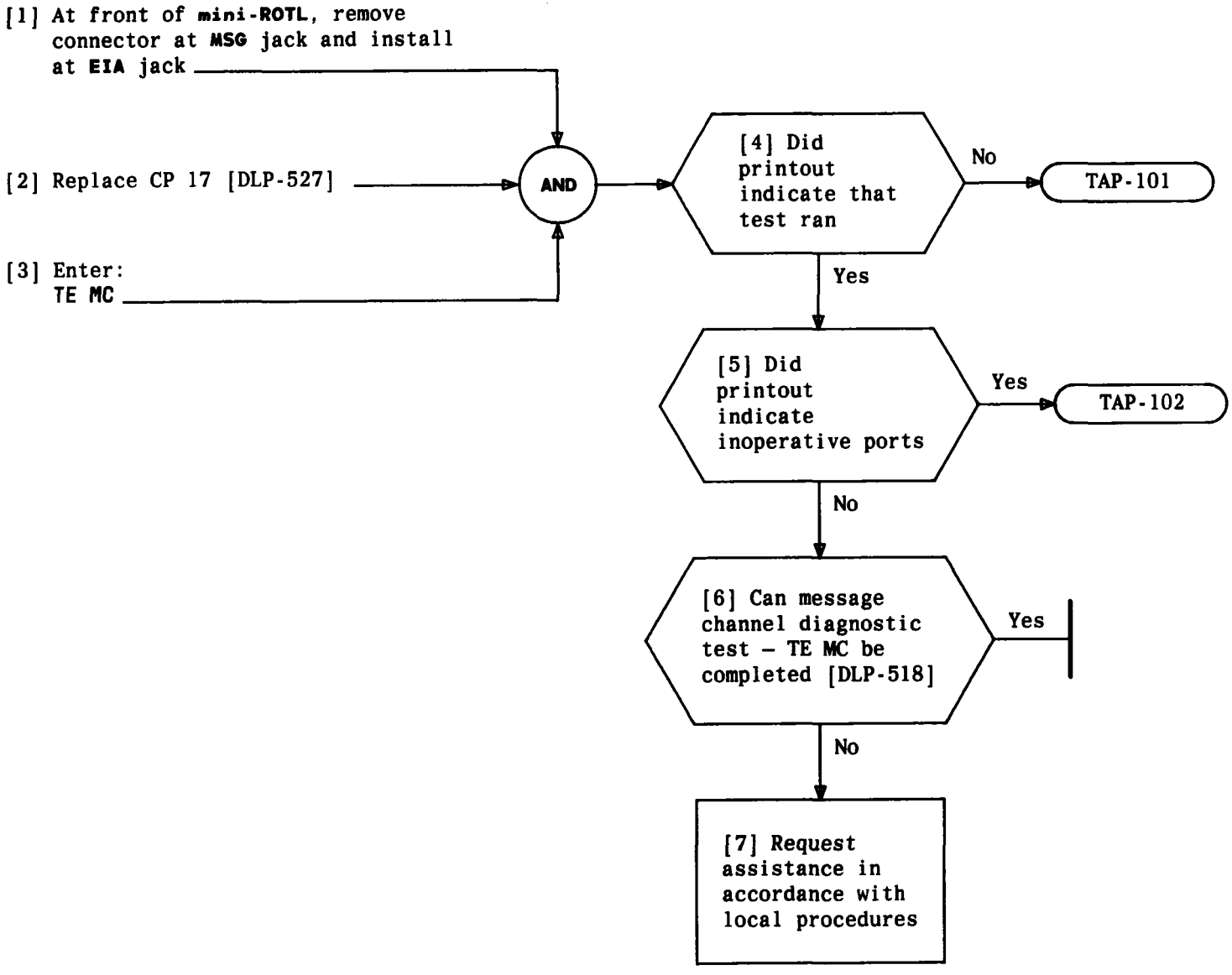

CLEAR MESSAGE CHANNEL DIAGNOSTIC TEST TROUBLE

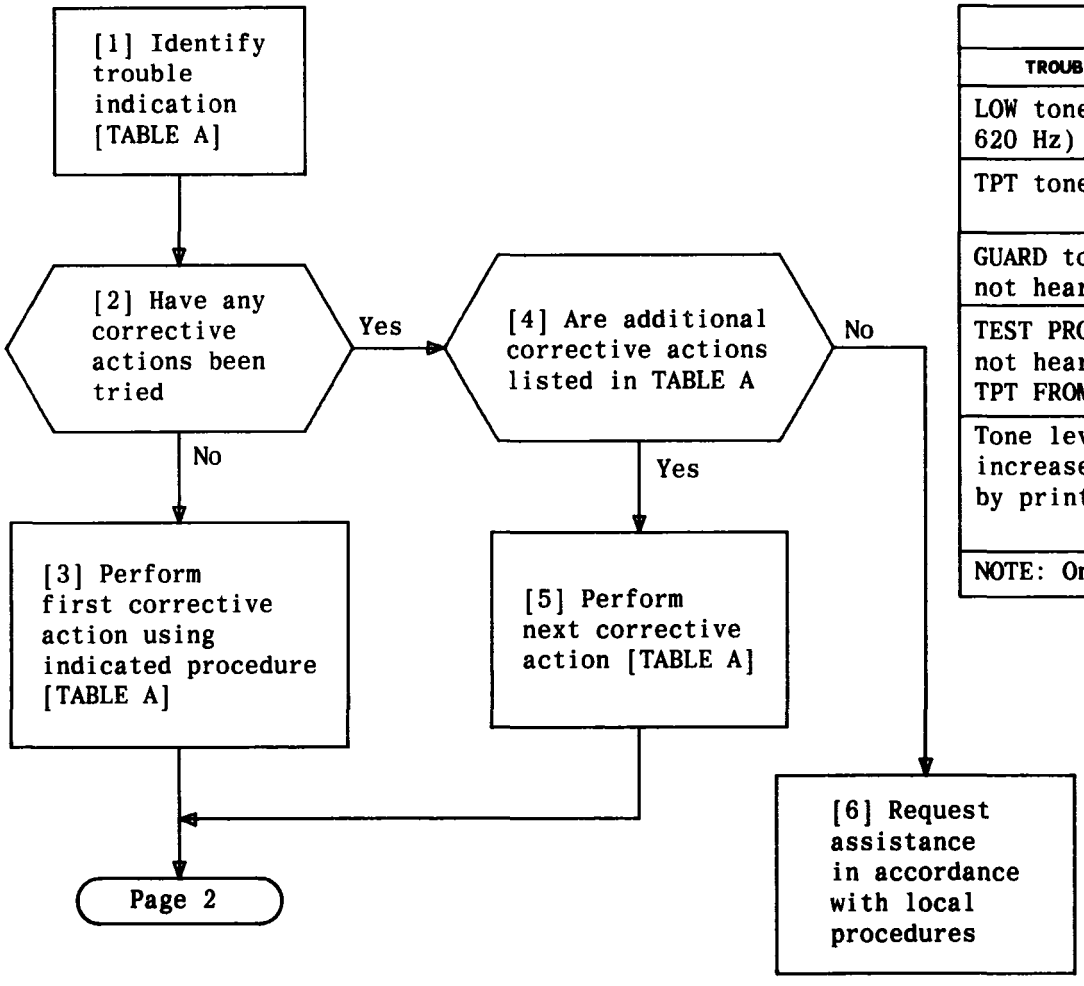

TABLE A (NOTE)

TROUBLE CONDITION	CORRECTIVE ACTION (NOTE)	PROCEDURE
LOW tone (480 and 620 Hz) not heard	1. Replace CP 15 2. Replace CP 9	DLP-527 DLP-527
TPT tone not heard	1. Replace CP 15 2. Replace CP 9	DLP-527 DLP-527
GUARD tone (1200 Hz) not heard	1. Replace CP 15 2. Replace CP 9	DLP-527 DLP-527
TEST PROGRESS tone not heard after TPT FROM AGC printout	1. Replace CP 15 2. Replace CP 9 3. Replace CP 6	DLP-527 DLP-527 DLP-527
Tone level did not increase when indicated by printout	1. Adjust tone level at **VOL** potentiometer on CP 15 2. Replace CP 15	– DLP-527

NOTE: Only one circuit pack at a time should be replaced

CLEAR ROTL TONES DIAGNOSTIC TEST TROUBLE

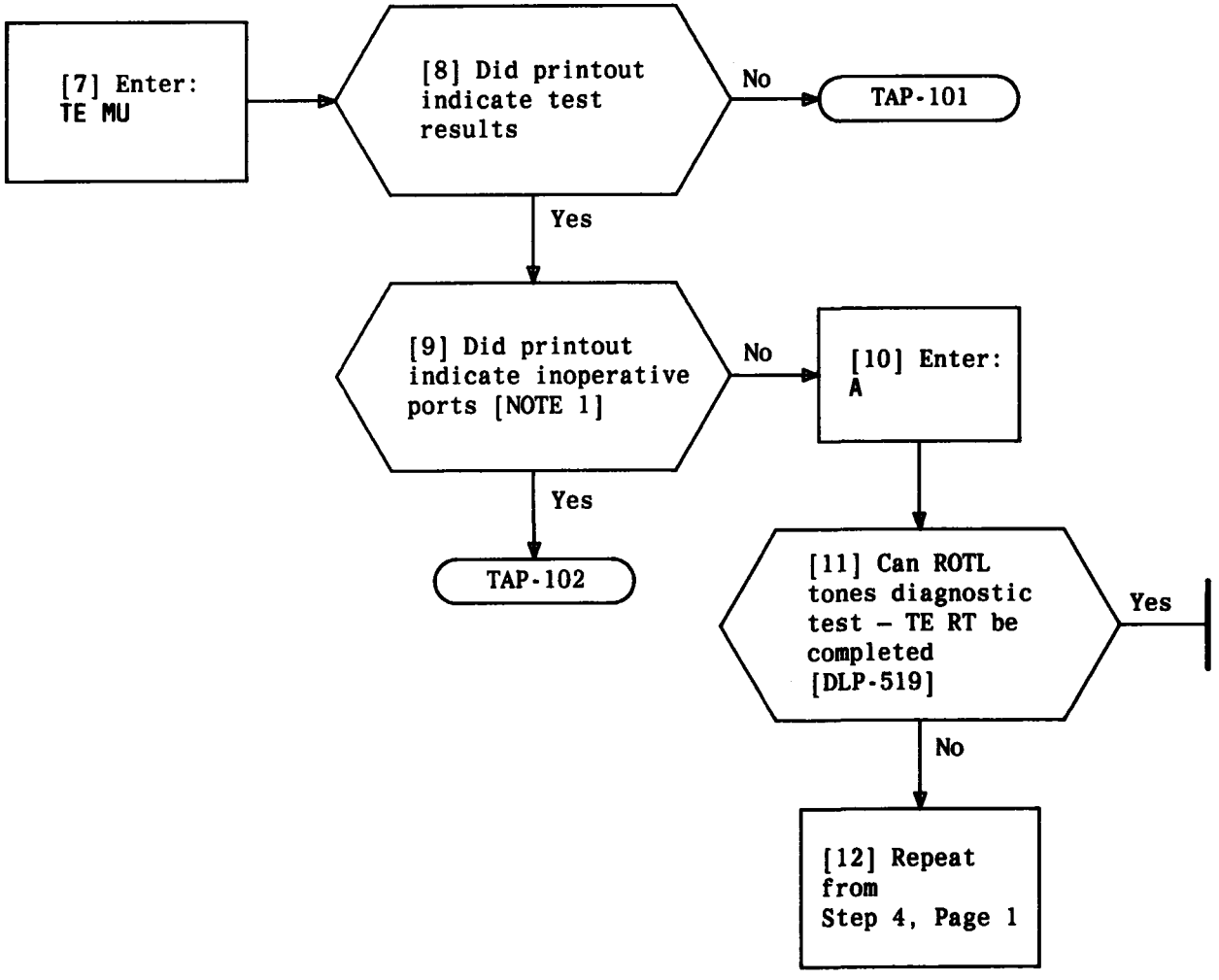

NOTE 1
Inoperative ports 6, 9, 10, 14, and 15 are OK. They are not equipped

CLEAR ROTL TONES DIAGNOSTIC TEST TROUBLE

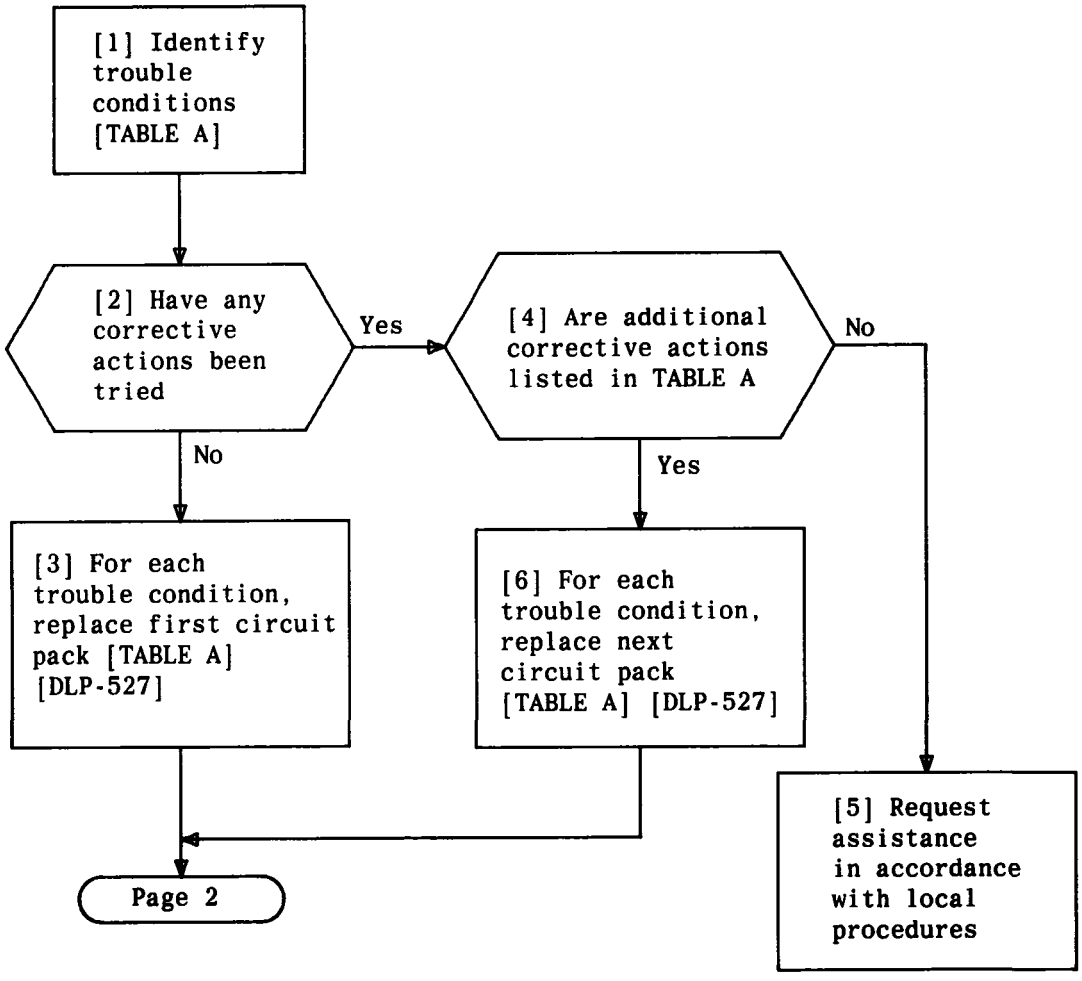

TABLE A	
TROUBLE CONDITION (NOTE)	CORRECTIVE ACTION (NOTE)
GUARD tone not heard	1. Replace CP 6 2. Replace CP 15
Milliwatt tone not heard	1. Replace CP 5 2. Replace CP 6
TPT tone not heard	1. Replace CP 15
MF 7 tone not heard	1. Replace CP 17
MF 9 tone not heard	
MF 11 tone not heard	
MF 13 tone not heard	
MF 15 tone not heard	
MF 17 tone not heard	
LT thru AGC tone not heard	1. Replace CP 15
405 Hz tone not heard*	1. Replace CP 5
2408 Hz tone not heard	1. Replace CP 5
NOTE: 405-Hz tone may be difficult to hear. To increase volume, hit **HOLD** key and adjust **VOL** potentiometer at CP 15. Restore volume to previous level after adjusting for 405 Hz	

CLEAR TRUNK TONES DIAGNOSTIC TEST TROUBLE

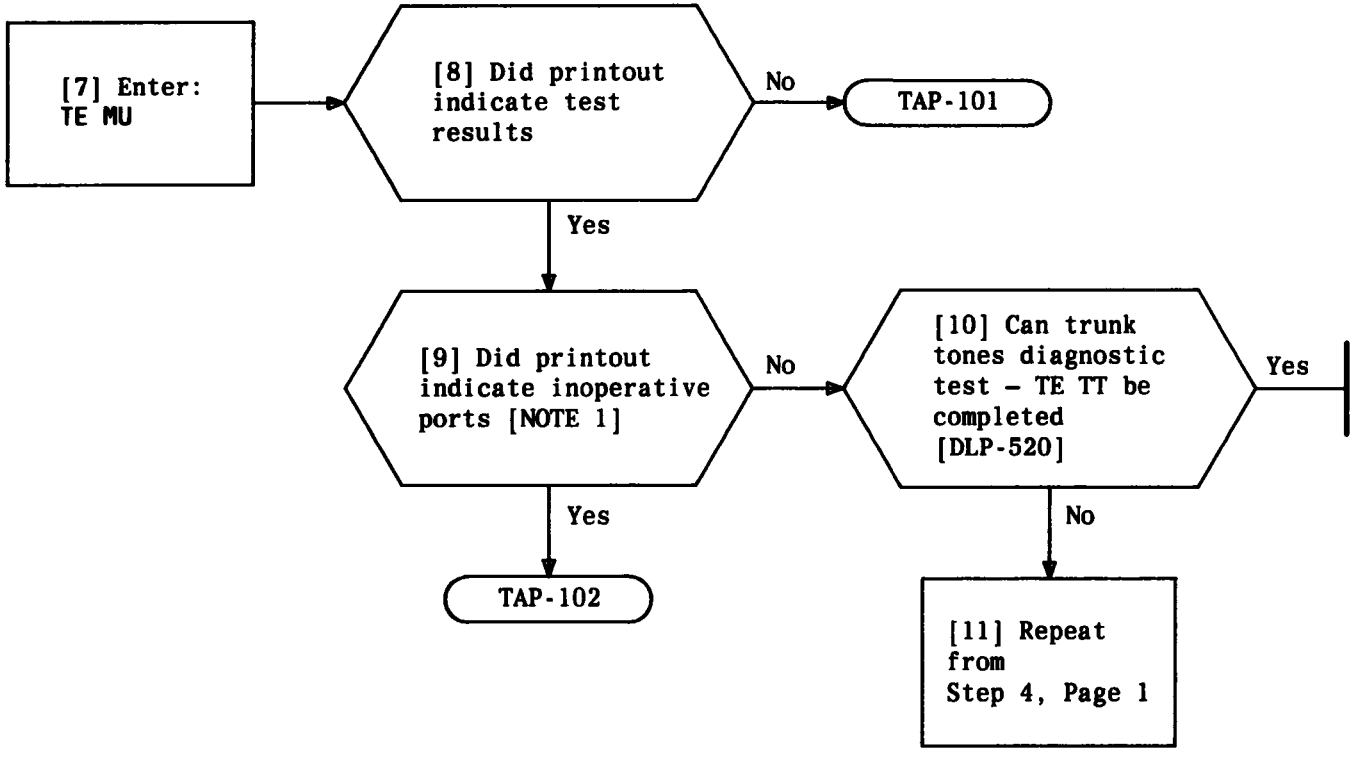

NOTE 1
Inoperative ports 6, 9, 10, 14, and 15 are OK. They are not equipped

CLEAR TRUNK TONES DIAGNOSTIC TEST TROUBLE

[1] At rear of **mini-ROTL**, plug in connector **P4** to 3ESS* switch

[2] At CP 15, set **TUT** switch to down position

[3] Identify trouble condition and corrective action [TABLE A]

[4] Replace first circuit pack not previously replaced [DLP-527]

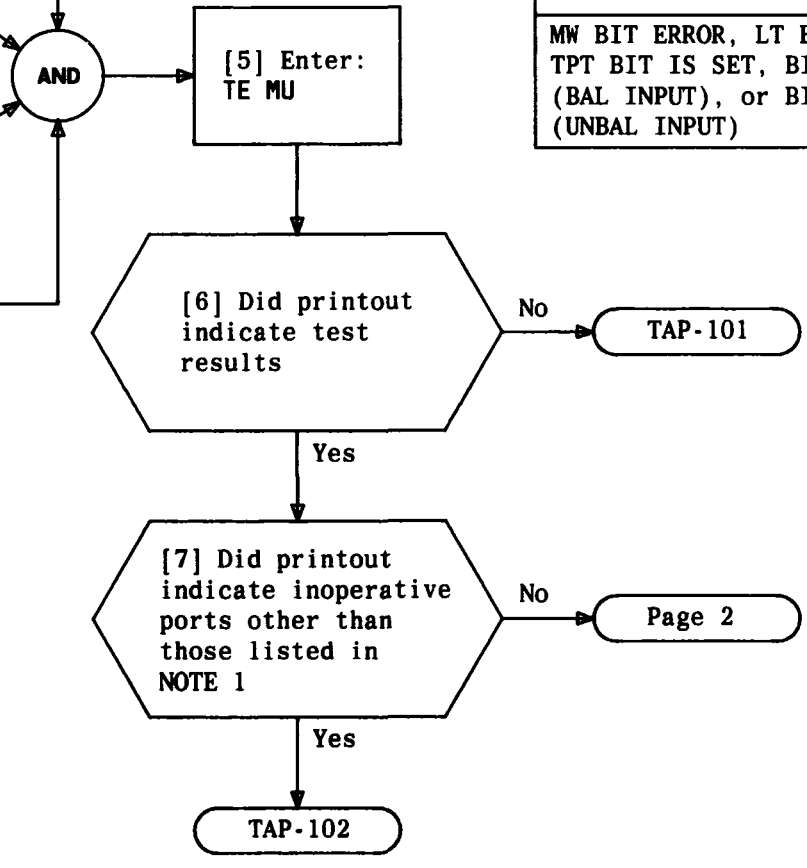

TABLE A	
TROUBLE INDICATION	CIRCUIT PACK REPLACEMENT
TPT BIT ERROR, LT BIT SET, or MW BIT IS SET	CP 12 CP 6 CP 15
MW BIT ERROR, LT BIT ERROR, TPT BIT IS SET, BIT ERROR (BAL INPUT), or BIT ERROR (UNBAL INPUT)	CP 12

NOTE 1
Inoperative ports 6, 9, 10, 14, and 15 are OK. They are not equipped

* Trademark of Western Electric

CLEAR TONE DETECTOR DIAGNOSTIC TEST TROUBLE

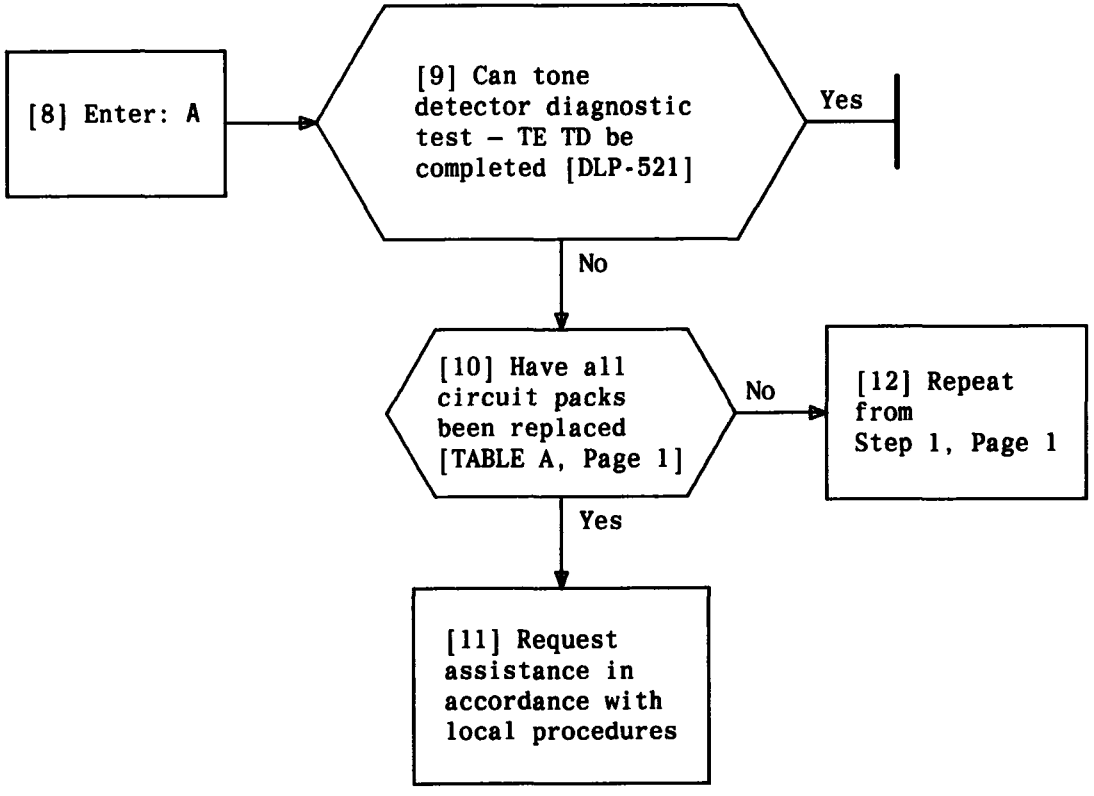

CLEAR TONE DETECTOR DIAGNOSTIC TEST TROUBLE

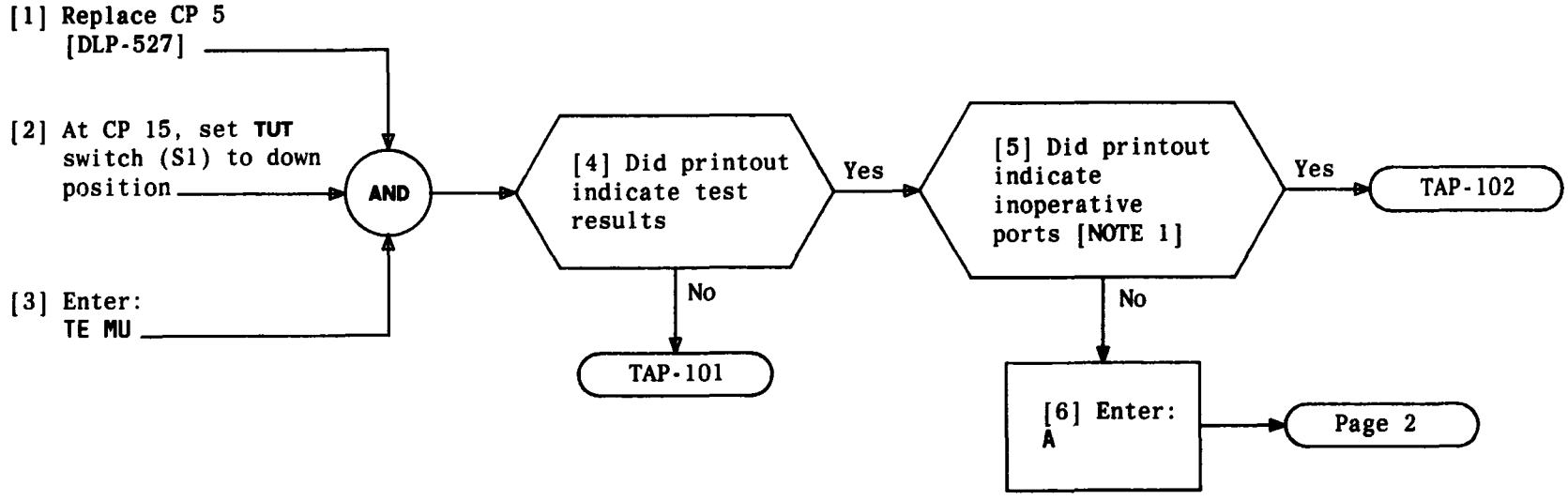

NOTE 1
Inoperative ports 6, 9, 10, 14, and 15 are OK. They are not equipped

Issue 2	DEC 1983
233-142-110	TAP
PAGE 1 of 2	108

CLEAR MF DETECTOR DIAGNOSTIC TEST TROUBLE

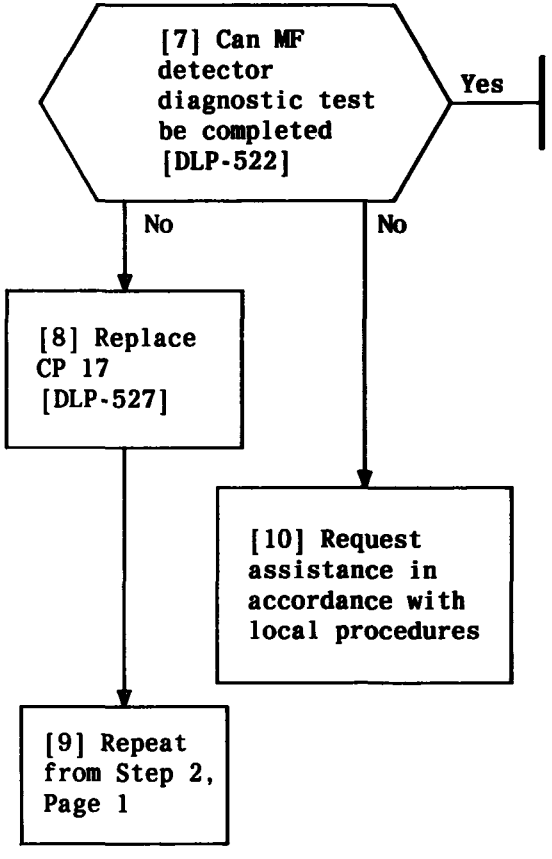

CLEAR MF DETECTOR DIAGNOSTIC TEST TROUBLE

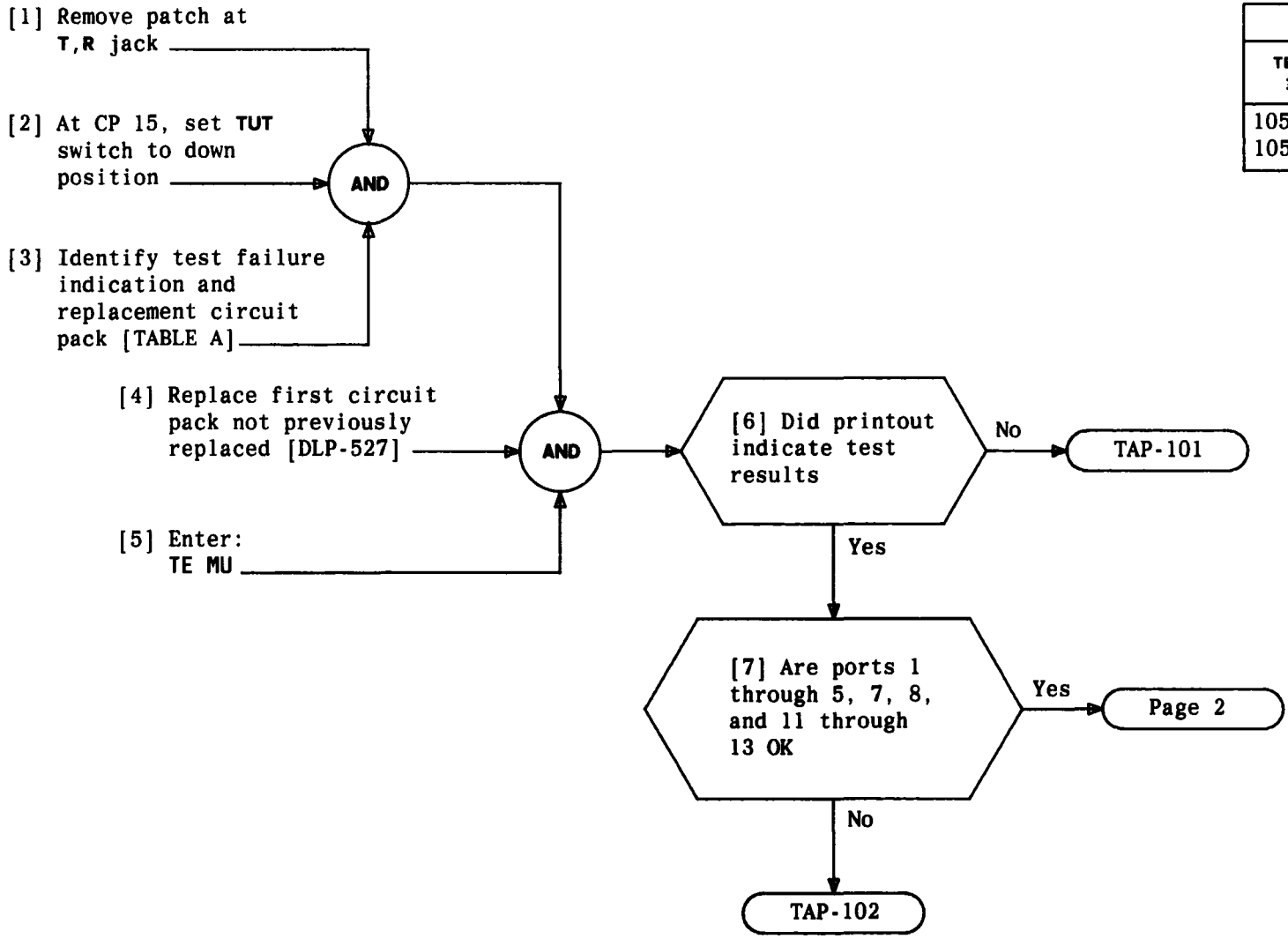

TABLE A	
TEST FAILURE INDICATION	CIRUIT PACK REPLACEMENT
105 A circuit 105 B circuit	CP 16, CP 21

CLEAR 105-TEST LINE DIAGNOSTIC TEST TROUBLE

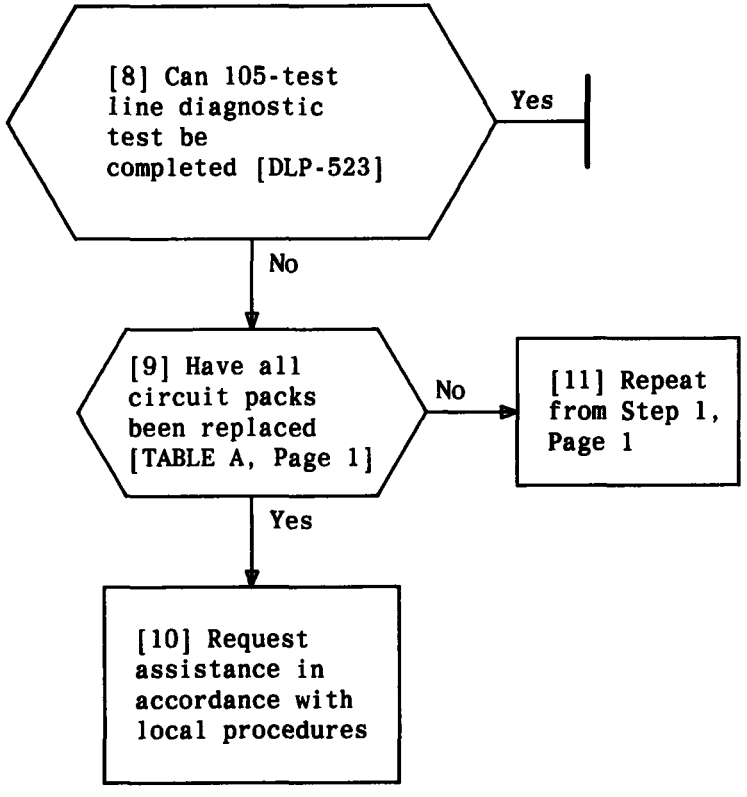

CLEAR 105-TEST LINE DIAGNOSTIC TEST TROUBLE

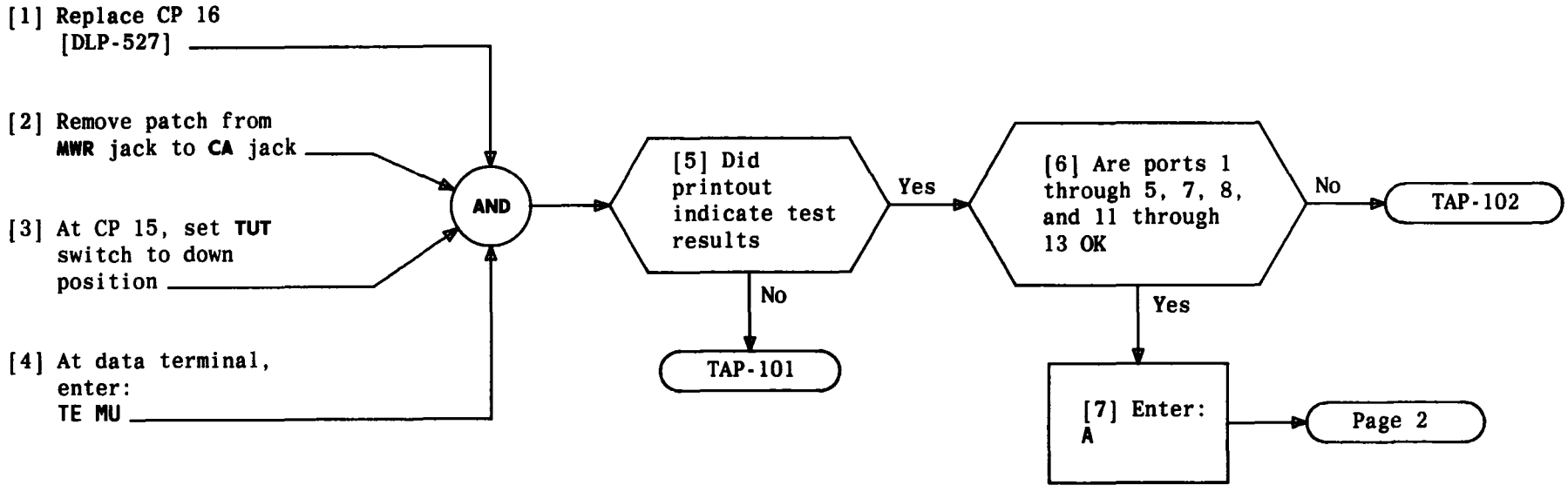

CLEAR PORT SELECT RELAYS DIAGNOSTIC TEST TROUBLE

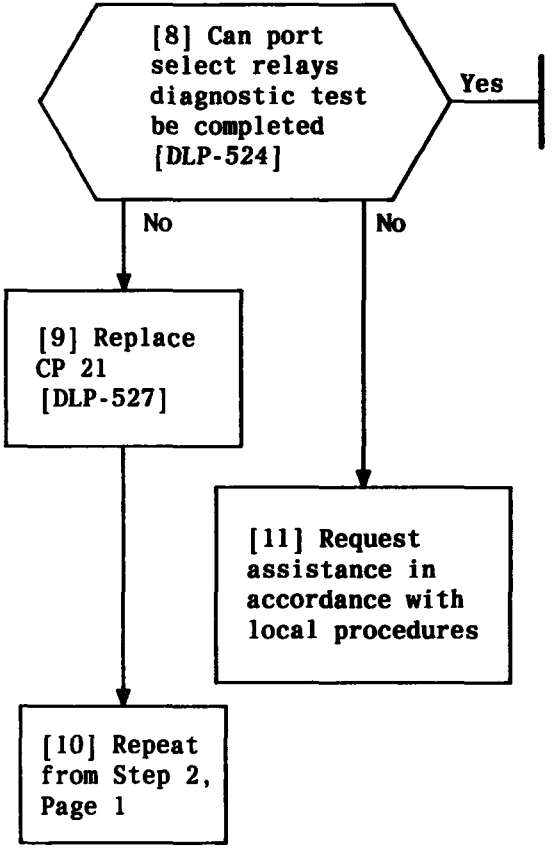

CLEAR PORT SELECT RELAYS DIAGNOSTIC TEST TROUBLE

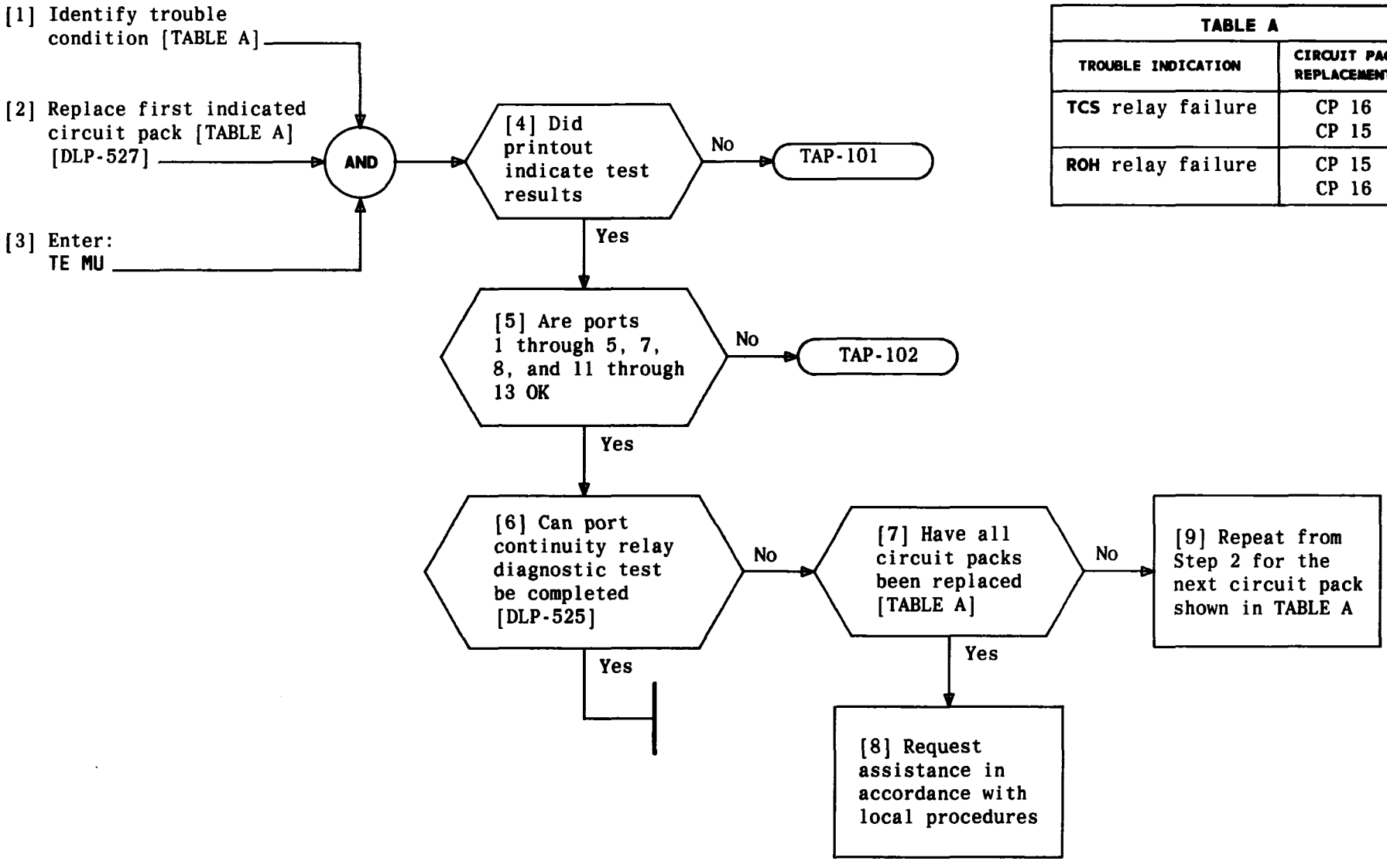

TABLE A	
TROUBLE INDICATION	CIRCUIT PACK REPLACEMENT
TCS relay failure	CP 16 CP 15
ROH relay failure	CP 15 CP 16

CLEAR PORT CONTINUITY RELAY DIAGNOSTIC TEST TROUBLE

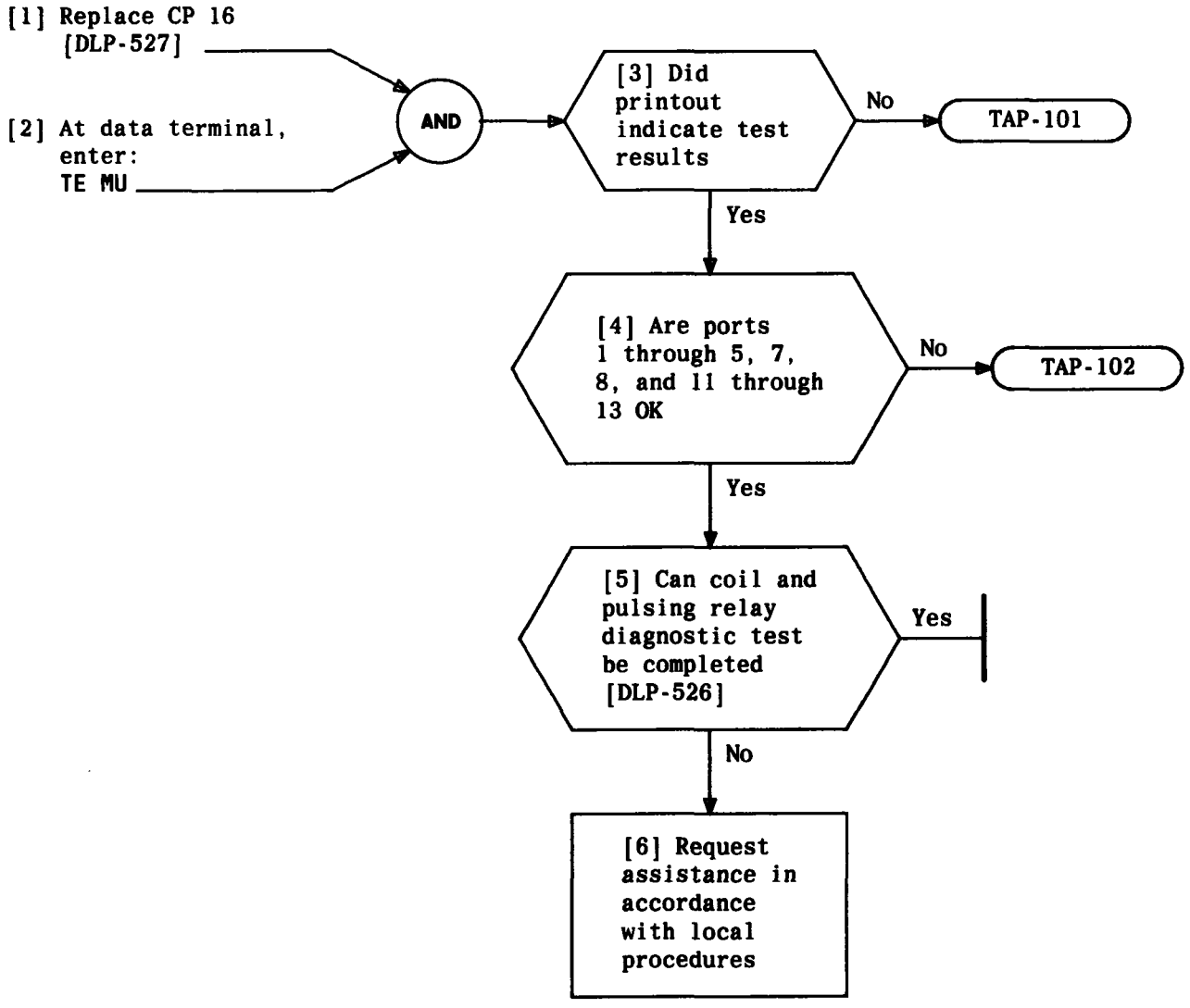

CLEAR COIL AND PULSING RELAY DIAGNOSTIC TEST TROUBLE

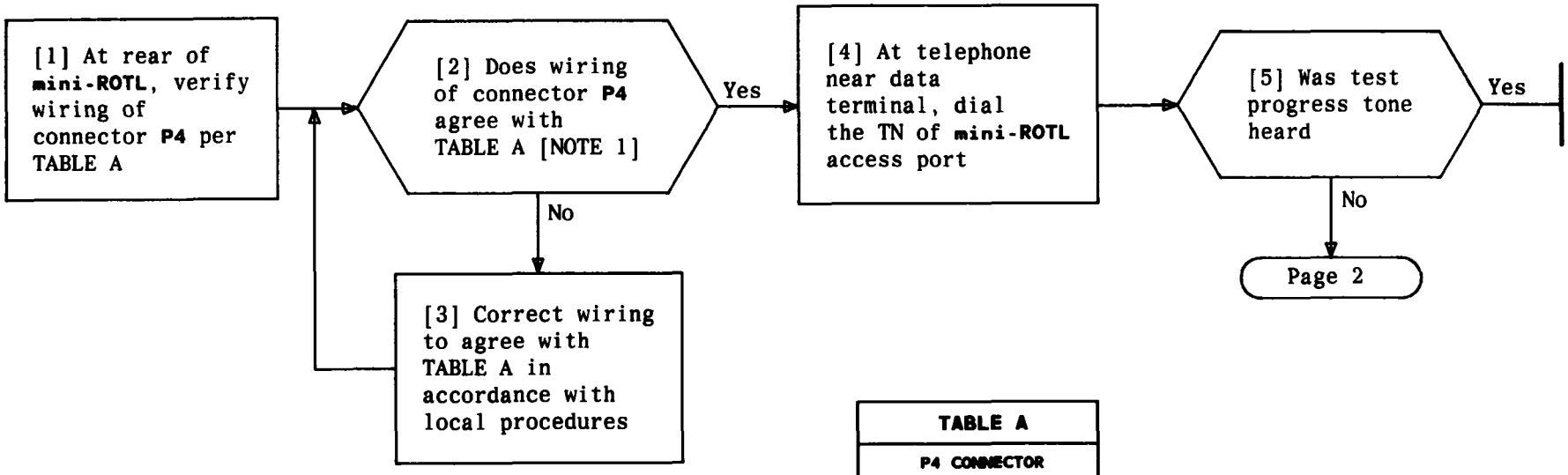

TABLE A	
P4 CONNECTOR	
ROTL PIN NO.	TTYC PIN NO.
2	14
3	16
7	7
8	8
ROTL PIN NO.	HMDF ROTL BLOCK
9	CAR
10	CAT
11	TUTT
12	TUTR
13	RT
14	RR
15	TCN2
16	RCN2
17	TCN1
18	RCN1

NOTE 1
The cabling diagram of connector P4 is found on CAD1 of SD-99392-01

CLEAR MINI-ROTL ACCESS TROUBLE CONDITION

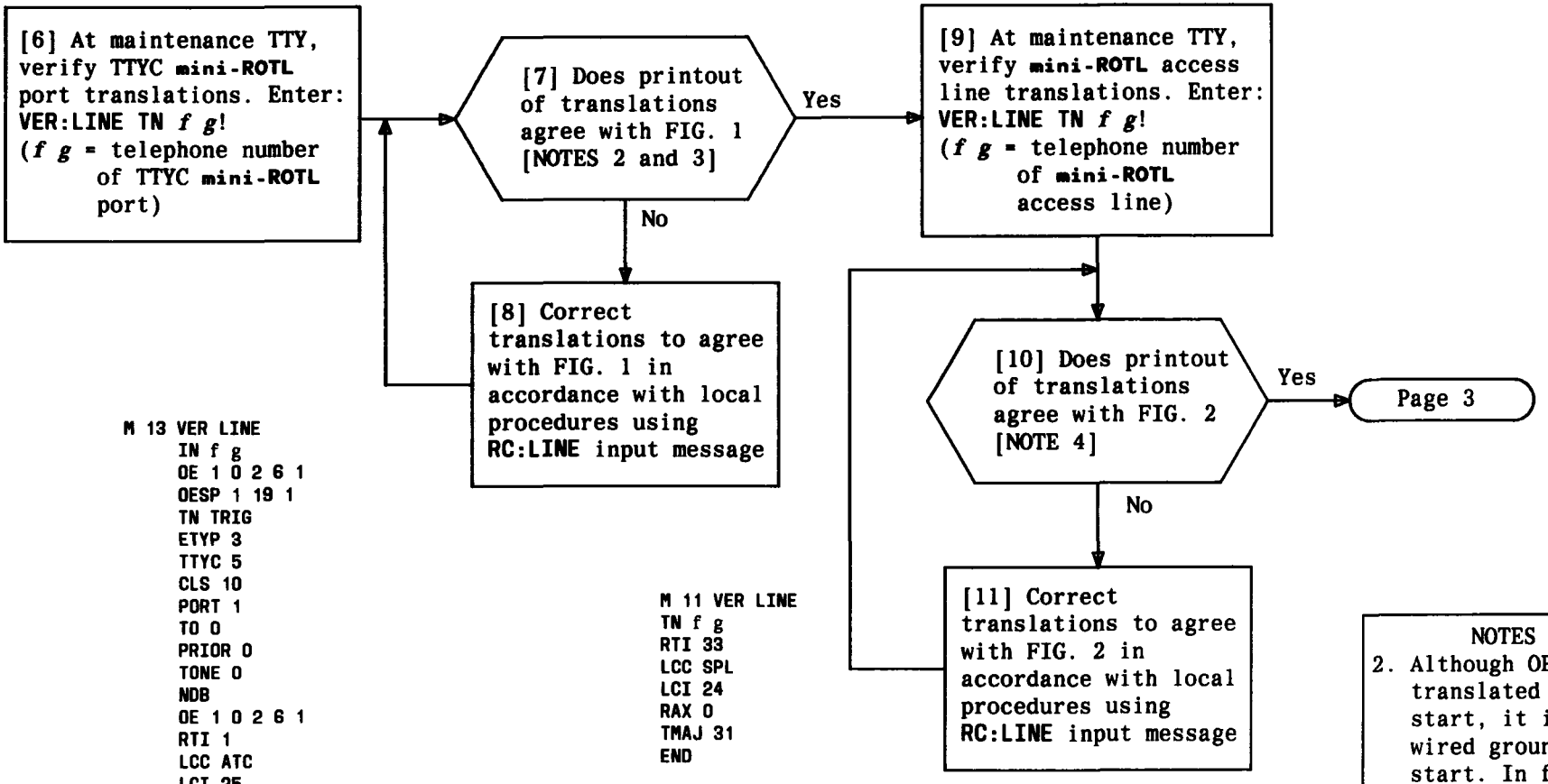


```
M 13 VER LINE
     IN f g
     OE 1 0 2 6 1
     OESP 1 19 1
     TN TRIG
     ETYP 3
     TTYC 5
     CLS 10
     PORT 1
     TO 0
     PRIOR 0
     TONE 0
     NDB
     OE 1 0 2 6 1
     RTI 1
     LCC ATC
     LCI 25
     RAX 0
     OMAJ 29
     SCR 5
     TMAJ 29
     PLIT
     GST
     BTN 242 0051
     END
```

FIG. 1 – Printout of Translations for TTYC Mini-ROTL Port

```
M 11 VER LINE
TN f g
RTI 33
LCC SPL
LCI 24
RAX 0
TMAJ 31
END
```

FIG. 2 – Printout of Translations for TTYC Mini-ROTL Access Line

NOTES

2. Although OE is translated ground start, it is not wired ground start. In fact, it is not even wired to the frame
3. TN, TTYC, PORT, and BTN will vary in different telephone offices
4. TN and RTI will vary in different telephone offices

CLEAR MINI-ROTL ACCESS TROUBLE CONDITION

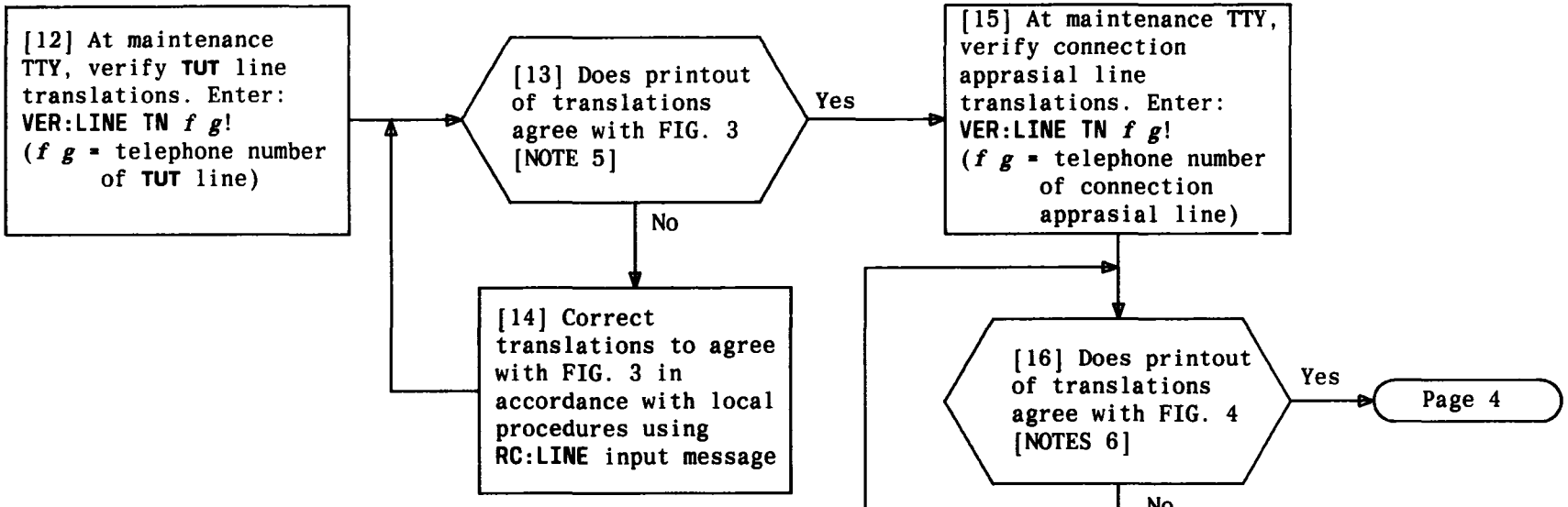


```
M 11 VER LINE
     IN f g
     OE 4 1 1 6 7
     OESP 4 15 7
     TN TRIG
     ETYP 10
     TER 5
     OE 4 1 1 6 7
     RTN
     RTI 0
     LCC ATC
     LCI 25
     RAX 0
     OMAJ 29
     SCR 5
     TMAJ 29
     PLIT
     GST
     BTN 242 0051
     END
```

FIG. 3 – Printout of Translations for TUT Line

```
M 12 VER LINE
TN f g
OE 4 0 0 6 1
OESP 4 3 1
RTI 40
LCC DT1
LCI 8
RAX 0
ONAJ 8
SCR 0
TMAJ 30
PLIT
END
```

FIG. 4 – Printout of Translations for Connection Appraisal Line

NOTES
5. TN, RTN, and BTN will vary in different telephone offices
6. TN will vary in different telephone offices

CLEAR MINI-ROTL ACCESS TROUBLE CONDITION

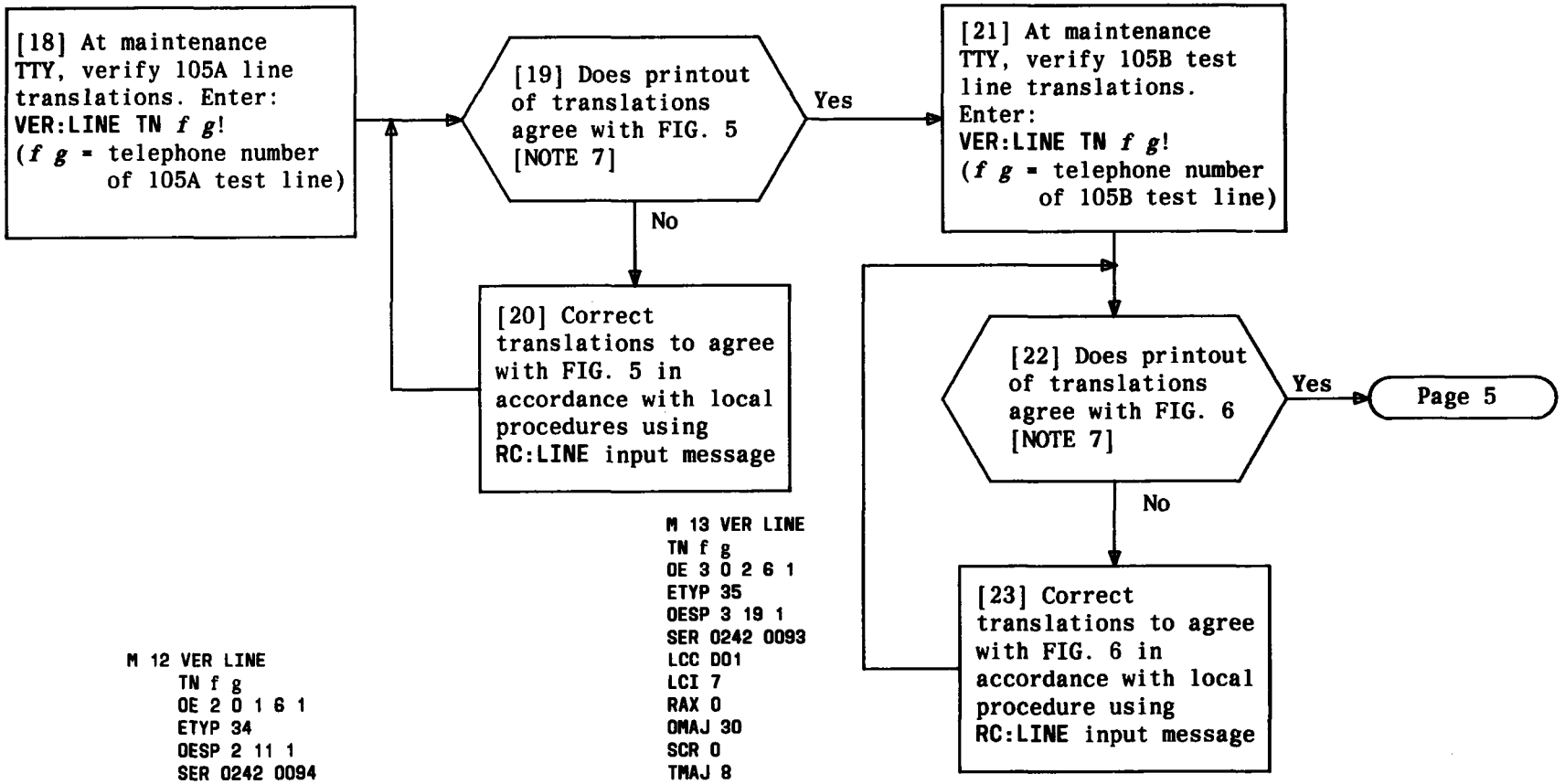


```
M 12 VER LINE
     TN f g
     OE 2 0 1 6 1
     ETYP 34
     OESP 2 11 1
     SER 0242 0094
     LCC D01
     LCI 7
     RAX 0
     OMAJ 30
     SCR 0
     TMAJ 8
     PLIT
     END
```

FIG. 5 – Printout of Translations for 105A Test Line

```
M 13 VER LINE
TN f g
OE 3 0 2 6 1
ETYP 35
OESP 3 19 1
SER 0242 0093
LCC D01
LCI 7
RAX 0
OMAJ 30
SCR 0
TMAJ 8
PLIT
END
```

FIG. 6 – Printout of Translations for 105B Test Line

NOTE 7
TN and SER will vary in different telephone offices

CLEAR MINI-ROTL ACCESS TROUBLE CONDITION

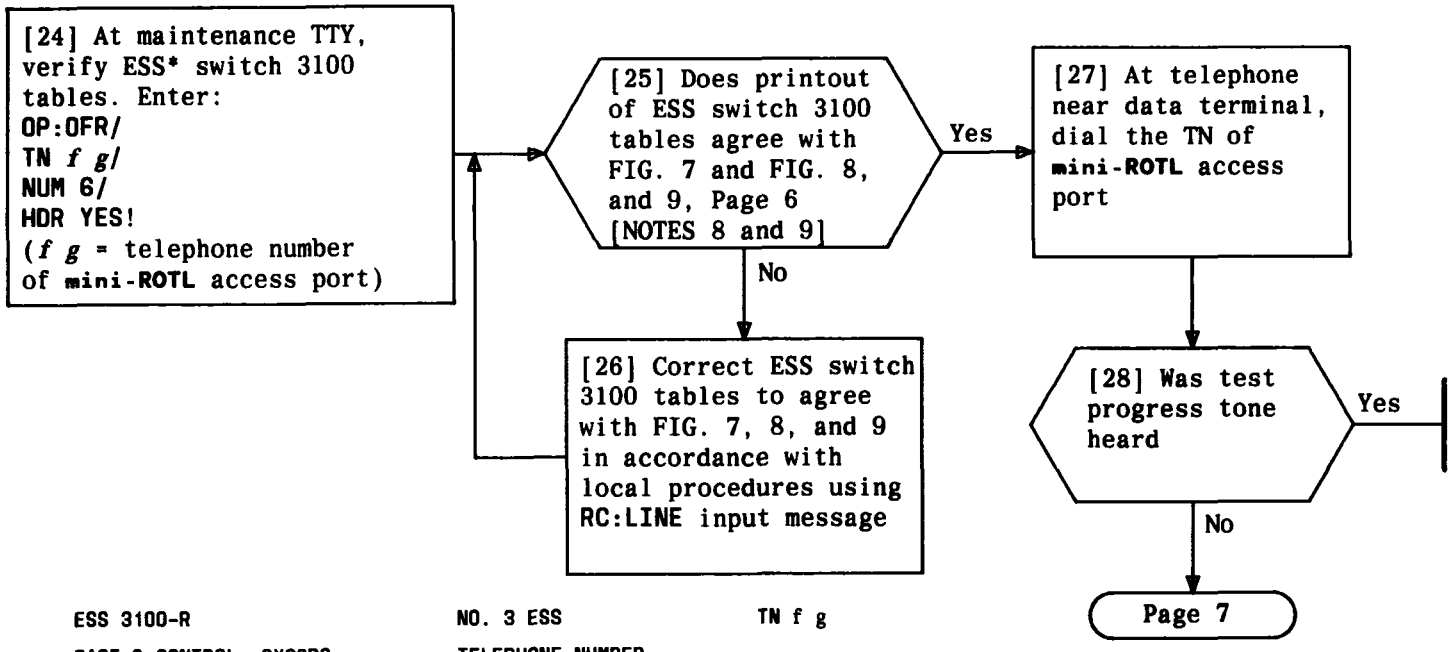

ESS 3100-R NO. 3 ESS TN f g

BASE & CONTROL: 3X02B0 TELEPHONE NUMBER

OFFICE:_____ DATE:_____ _____

TN	OFFICE EQUIP	CGCS OROWSE NPNGWV	L	P	R	L	C	G	TE	ECEC	EEB	H	T	L	R	R	REG (MR)	S U P	S U P	REMARKS (13)
									EQUIPMENT FEATURES			MLH GROUP					SOFT MSG			
0090					SPL											033				ROTL ACCESS
0091	041167				ATC	*										000		*	*	ROTL TUT-SC5
0092	040061				DT1											040			*	CONN APPR
0093	020161				DO1													*	*	105TL(A)
0094	030261				DO1													*	*	105TL(B)
0095	010261				ATC	*										001		*	*	ROTL DATA ATC

* * * *

FIG. 7 – Printout of ESS 3100 Table

* Trademark of Western Electric

NOTES

8. Columns in FIG. 7, 8, and 9 indicated with an asterisk (*) contain information that will vary in different telephone offices
9. FIG. 9 may not print out in some telephone offices due to no information existing in that table

CLEAR MINI-ROTL ACCESS TROUBLE CONDITION

```
ESS 3107-1R                          NO. 3 ESS          TN f g

BASE & CONTROL: 3X02B0          SUPPLEMENTARY INFO
OFFICE:_____________        DATE:_________ _________
-------------------------------------------------------------------------------
    !    HOT LINE  !         !  DP   !  DPM    !  REORDER !  BILLING
    !     NUMBER   ! SERIES !-------+---------!   BUSY   !  NUMBER
    !              !COMPLETE!  DPU  !  DPCU   !   (BSY)  ! BTN/OWATS
    !--------------+--------+-------+---------+----------+----------
    !P!   !   !    !   !    !     ! !     ! ! ! !        !   !    !
    !R!   !   !    !   !    !     ! !     ! ! ! !        !   !    !
    !E!   !   !    !   !    !    T!T!    T! !T!B!        !   !    !T
 TN !F! N ! N ! TN ! N ! TN !P   R!Y!P   R!P!Y!U!S   R P ! N ! TN !Y
 EU !I! P ! X ! EU ! X ! EU !PP  I!P!PP  I!N!P!S!C   O N ! X ! EU !P
 LM !X! A ! X ! LM ! X ! LM !DD  P!E!DD  P!T!E!Y!N   W T ! X ! LM !E
----+-+---+---+----+---+----+-----+-+-----+-+-+-+--------+---+----+-
0090! !   !   !    !   !    !     ! !     ! ! ! !        !   !    !
0091! !   !   !    !   !    !     ! !     ! ! ! !        !242!0051!B
0092! !   !   !    !   !    !     ! !     ! ! ! !        !   !    !
0093! !   !   !    !242!0094!     ! !     ! ! ! !        !   !    !
0094! !   !   !    !242!0093!     ! !     ! ! ! !        !   !    !
0095! !   !   !    !   !    !     ! !     ! ! ! !        !242!0051!B
 *                  *   *                                *   *
```

FIG. 8 – Printout of ESS 3100 Table

```
ESS 3107-2R                          NO. 3 ESS          TN f g

BASE & CONTROL: 3X02B0          SUPPLEMENTARY INFO
OFFICE: _____________       DATE:_________ _________
-------------------------------------------------------------------------------
    !              !  ! ! ! !   !  ! !N!  !   !N! !   OTHER
    !              !  ! ! !A!   !  ! !O!  !   !I! !  FEATURES
    !    RETURN    !  !C! !U! T !  ! ! !P !   !G! !
    !--   TEL      !M !O! !T! I !  ! !D!R ! M !H! !----------
    !P!   NUM      !S !N! !O! M !  ! !I!I ! E !T! ! ! !   ! !
    !R!            !G !T! ! ! E !  ! !A!O ! M ! ! ! ! !   ! !
    !E!------------!  ! !P!D!   !E !T!L!R !   !T!R! !P!   ! !
 TN !F! N ! N ! TN !C !N!O!I! O !T !O! !I ! N !E!A!R!L! T ! !S
 EU !I! P ! X ! EU !L !U!R!A! U !Y !N!B!T ! U !S!M!O!I! R !S!O
 LM !X! A ! X ! LM !S !M!T!L! T !P !E!K!Y ! M !T!L!H!T! C !S!B
----+-+---+---+----+--+-+-+-+---+--+-+-+--+---+-+-+-+-+---+-+-
0090! !   !   !    !  ! ! ! !   !  ! ! !  !   ! ! ! ! !   ! !
0091! !   !242!0051!  ! ! ! !   !10! ! !  !005! ! ! !*!   ! !
0092! !   !   !    !  ! ! ! !   !  ! ! !  !   ! ! ! !*!   ! !
0093! !   !   !    !  ! ! ! !   !34! ! !  !   ! ! ! !*!   ! !
0094! !   !   !    !  ! ! ! !   !35! ! !  !   ! ! ! !*!   ! !
0095! !   !   !    !10!5!1! !000!03!0!*!00!   ! ! ! !*!   ! !
 *        *     *     * *                 *

    END
```

FIG. 9 – Printout of ESS 3100 Table

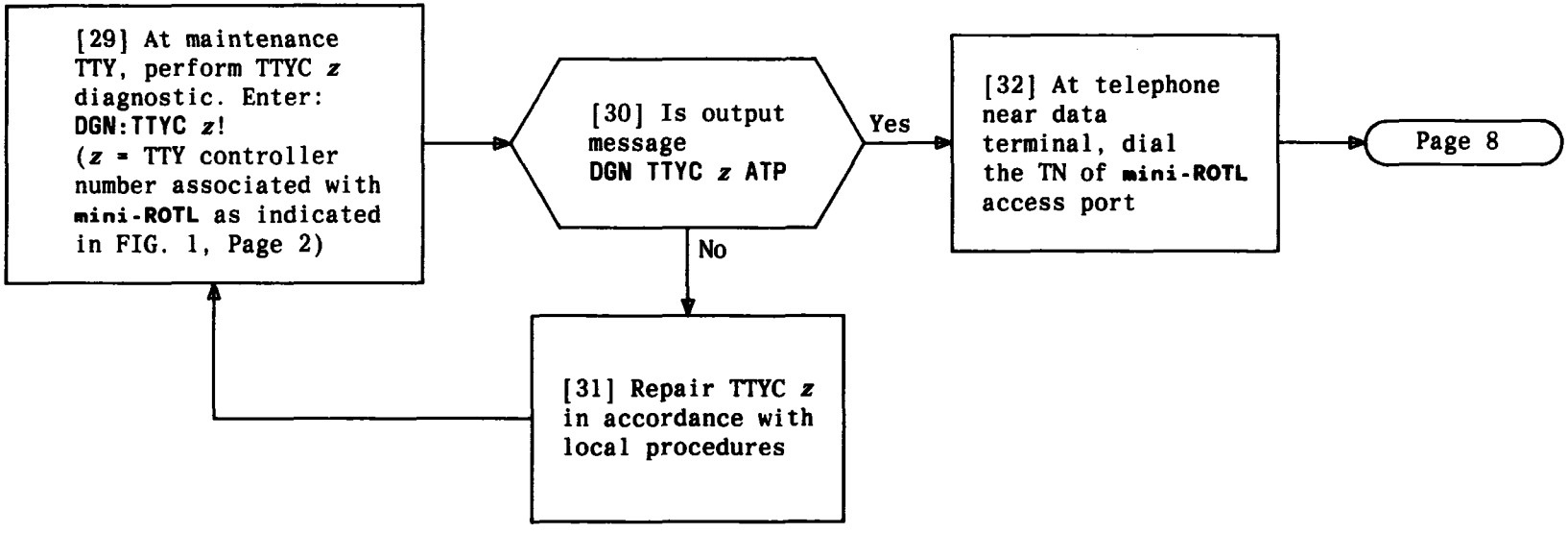

CLEAR MINI-ROTL ACCESS TROUBLE CONDITION

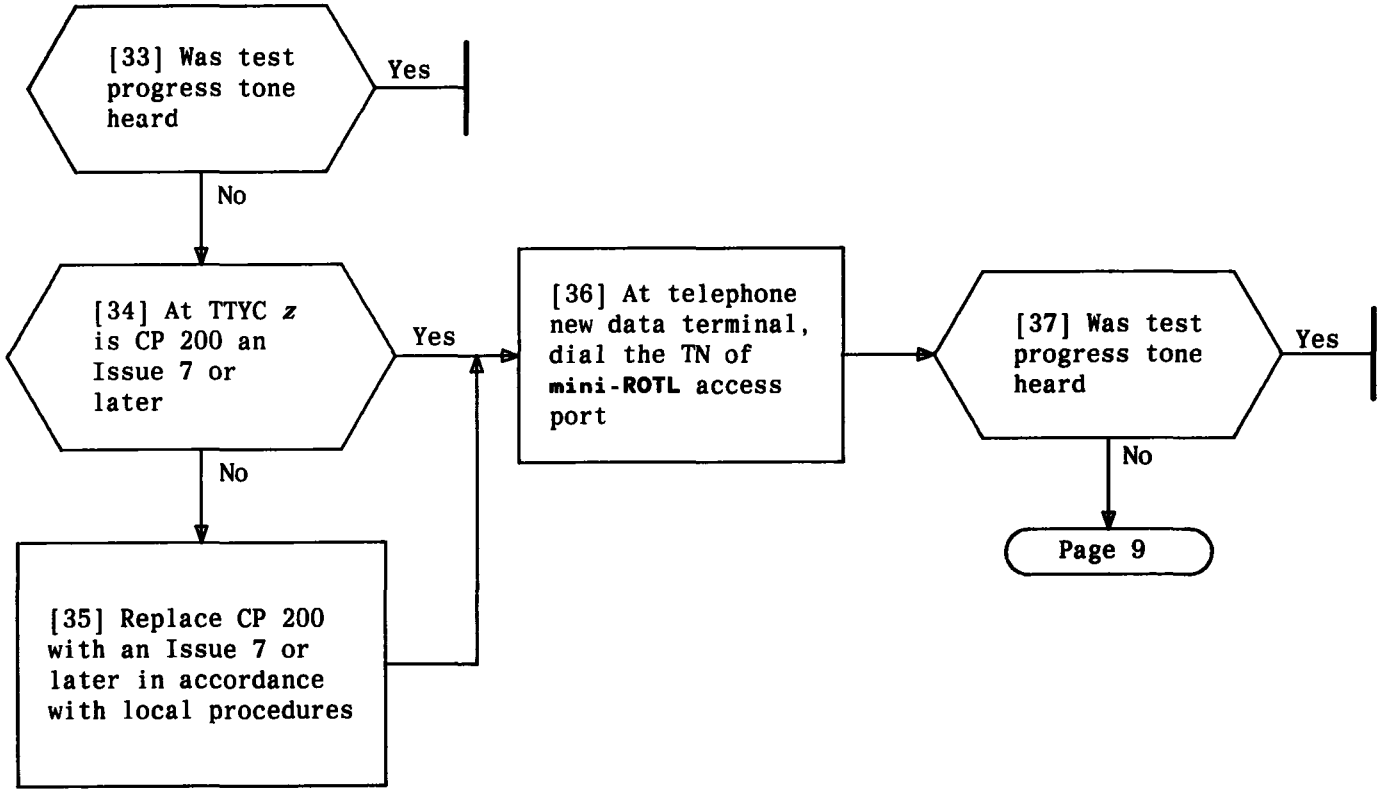

CLEAR MINI-ROTL ACCESS TROUBLE CONDITION

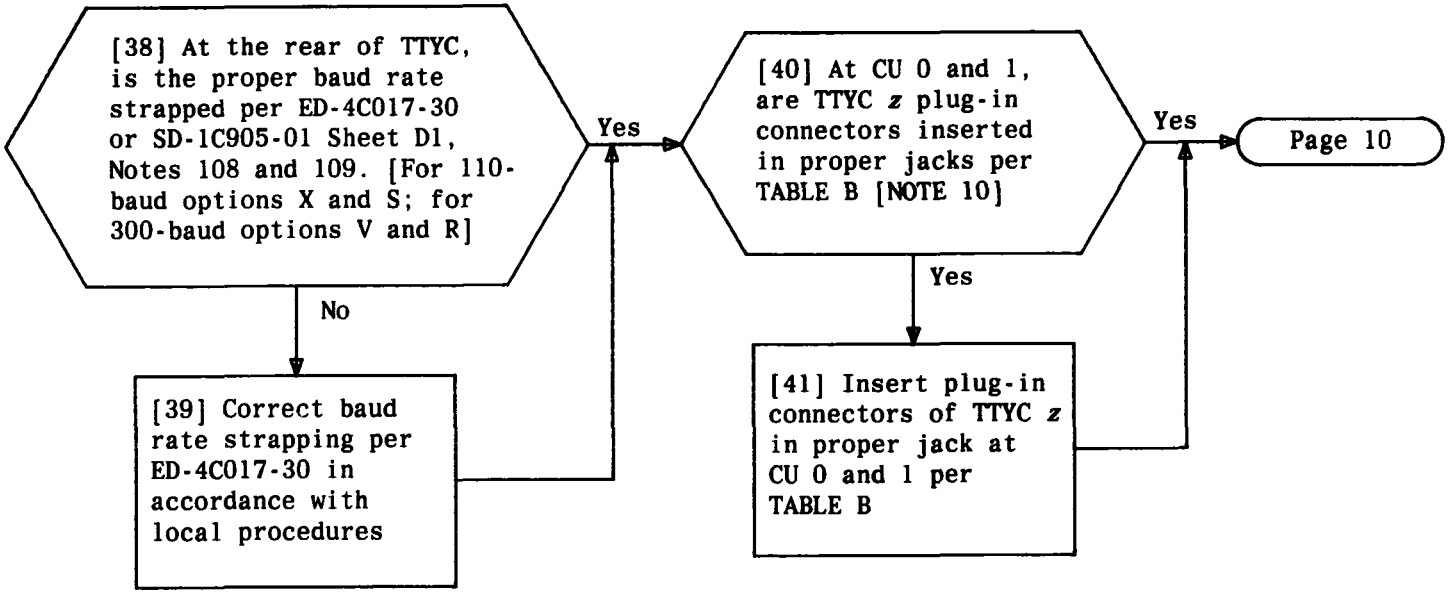

TABLE B

TTYC I/O CHANNEL ASSIGNMENTS

TTYC	MAIN CHANNEL	SUBCHANNEL
2	0	9
3	0	10
4	0	1
5	0	15
6	0	4
7	1	5

NOTE 10
Information in TABLE B per ED-4C018-01

CLEAR MINI-ROTL ACCESS TROUBLE CONDITION

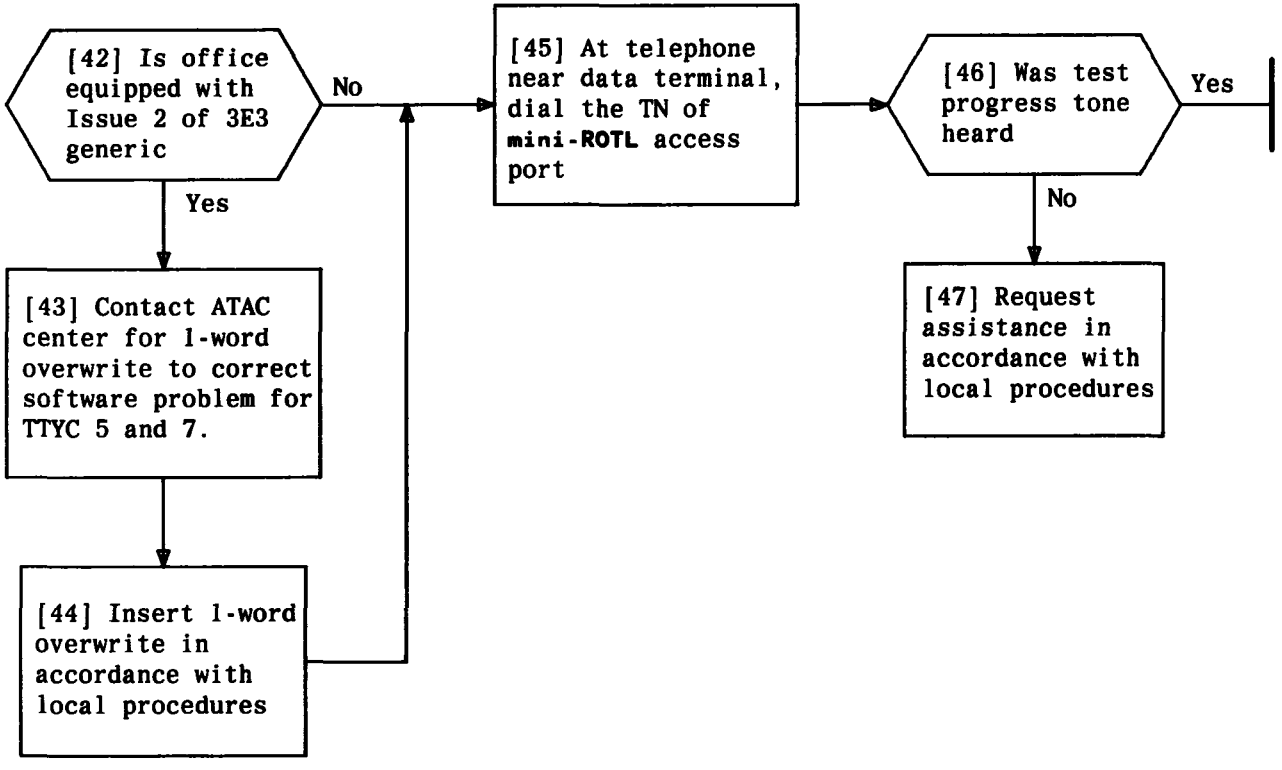

CLEAR MINI-ROTL ACCESS TROUBLE CONDITION

TABLE A		
QUANTITY	IDENTIFICATION	DESCRIPTION
1	KS-442A	Voltohmmeter or equivalent general use voltohmmeter
2	2P4A	Cords
3	**EXECUPORT** data terminal or equivalent with the following characteristics: **EIA RS-232** serial interface jack and connecting cable Acoustical coupler and modem or equivalent Full-duplex capability 110-baud data rate (ASCII code)	

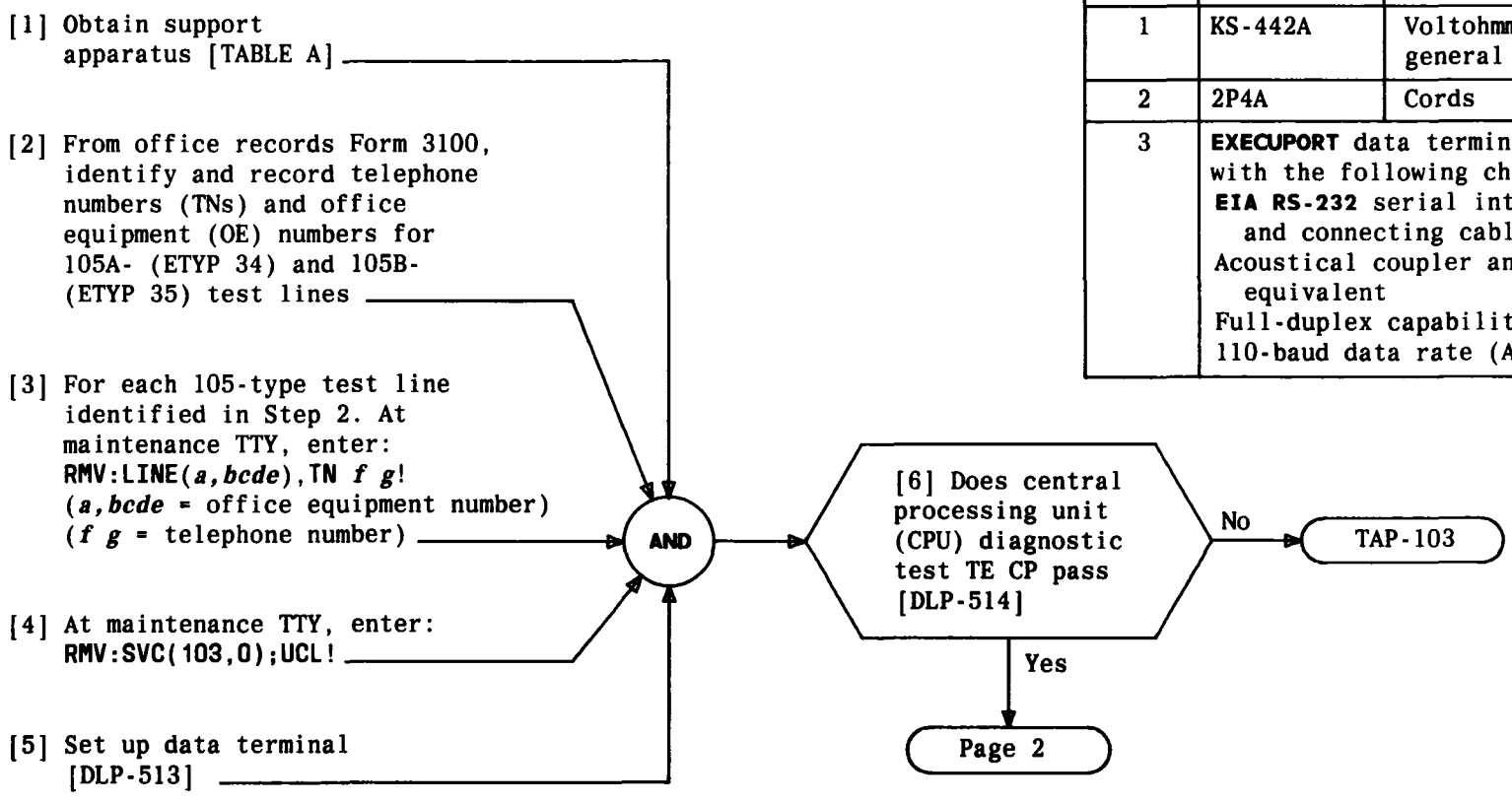

CLEAR CAROT REPORTED TROUBLES

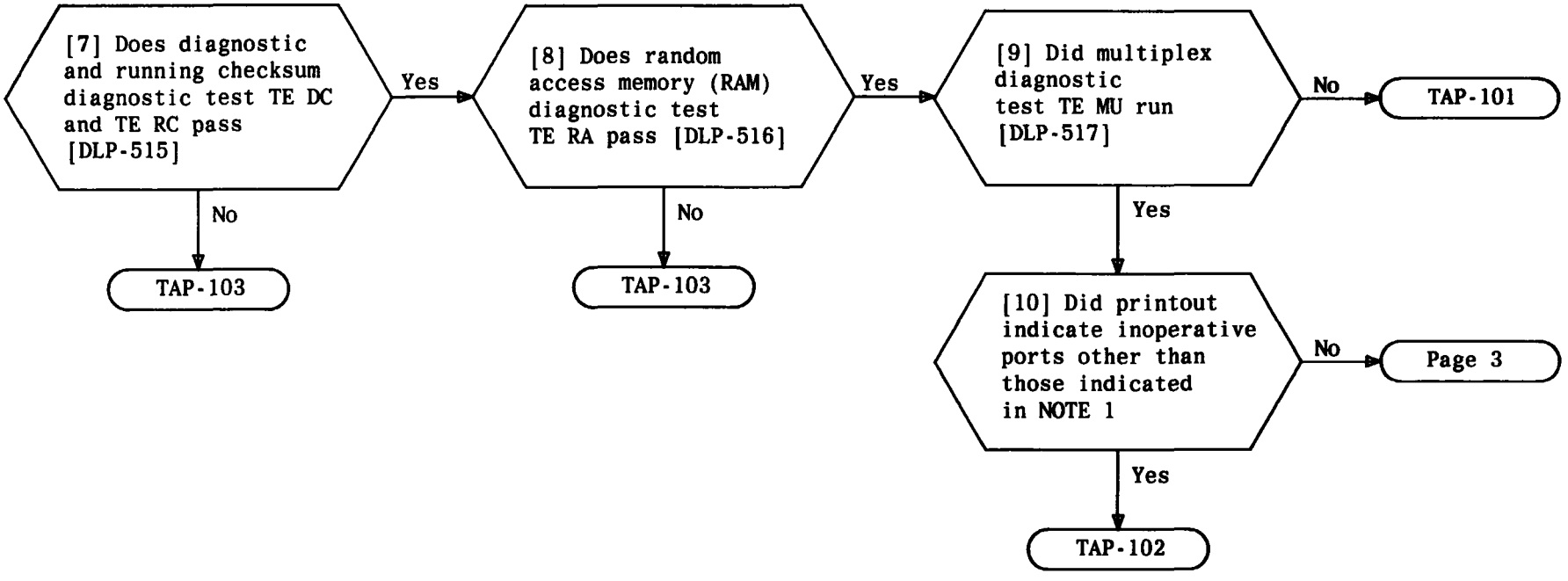

NOTE 1
Ports 6, 9, 10, 14, and 15 are always listed as inoperative. They are not equipped

CLEAR CAROT REPORTED TROUBLES

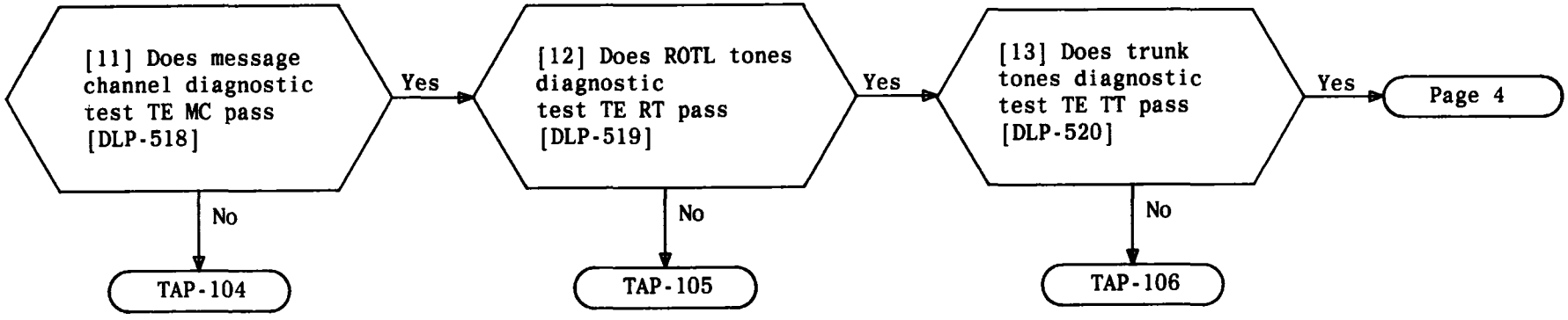

CLEAR CAROT REPORTED TROUBLES

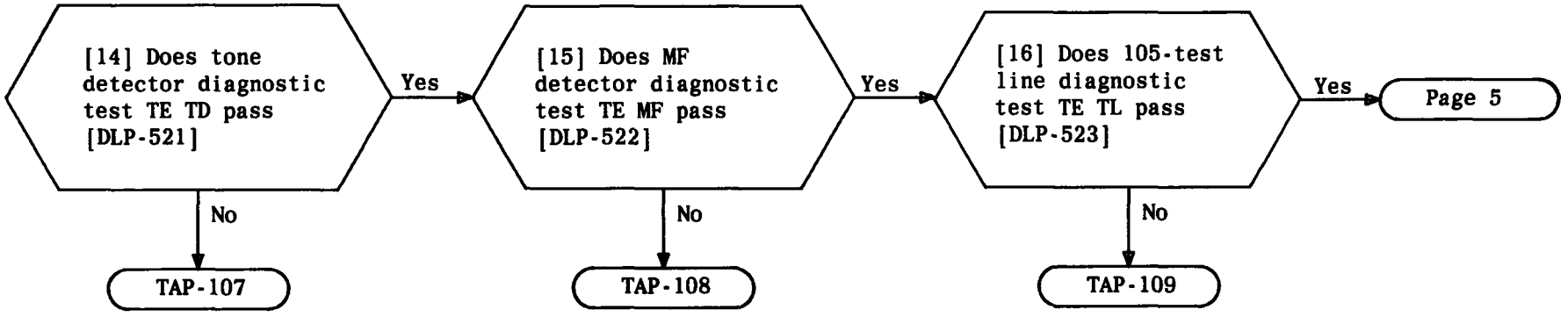

CLEAR CAROT REPORTED TROUBLES

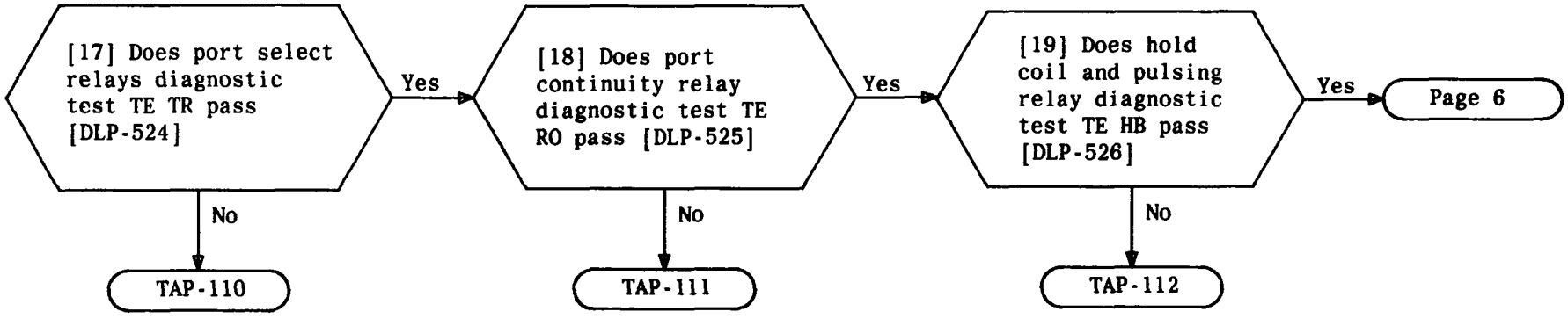

CLEAR CAROT REPORTED TROUBLES

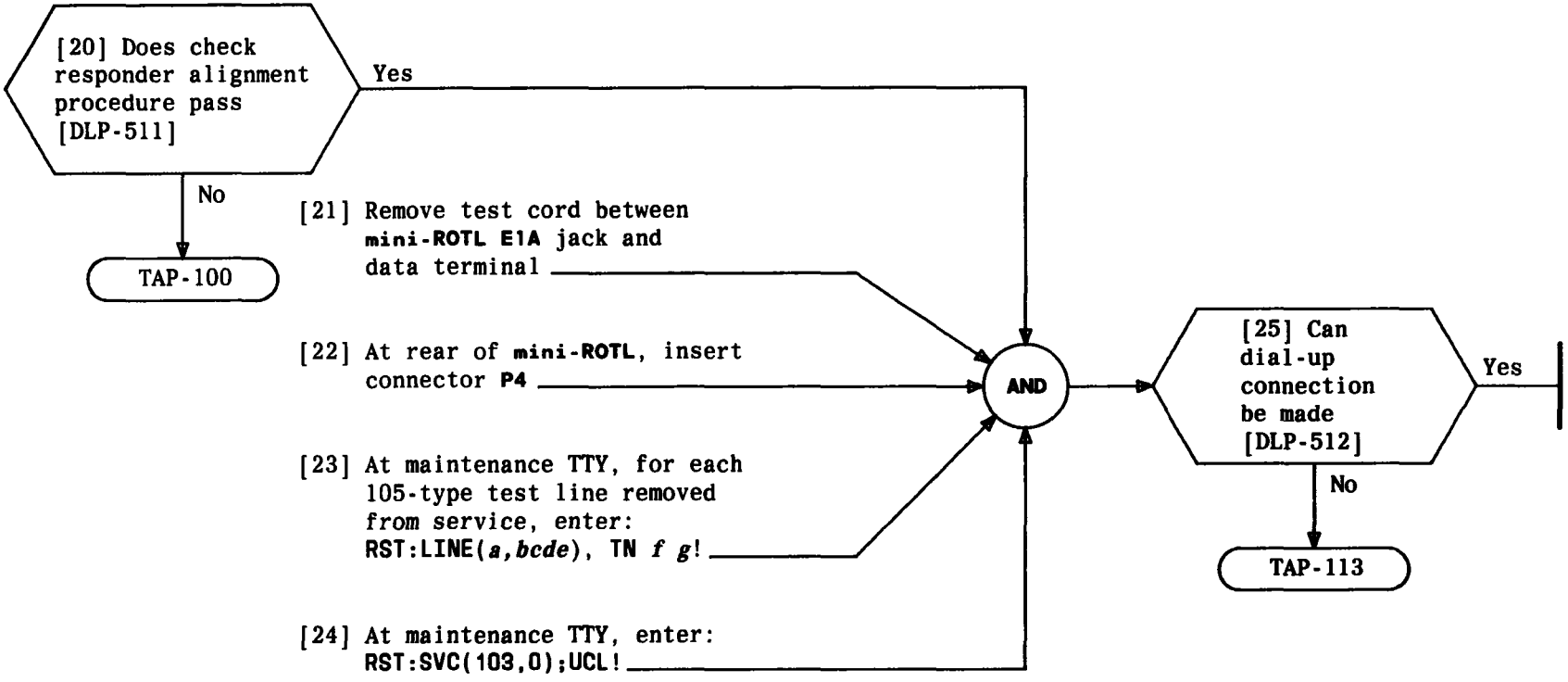

CLEAR CAROT REPORTED TROUBLES

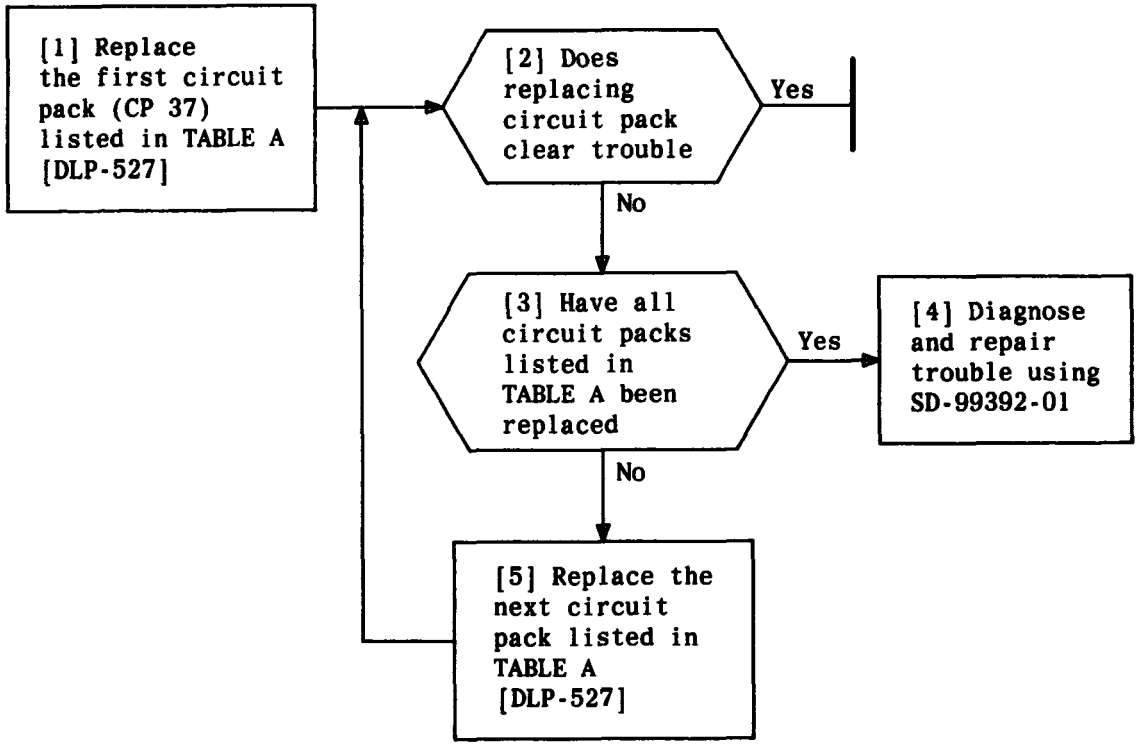

TABLE A	
ITEM	CIRCUIT PACK
1	CP 37
2	CP 36 (or CP 14)
3	CP 38 (or CP 18)

CLEAR USART DIAGNOSTIC TEST TROUBLE

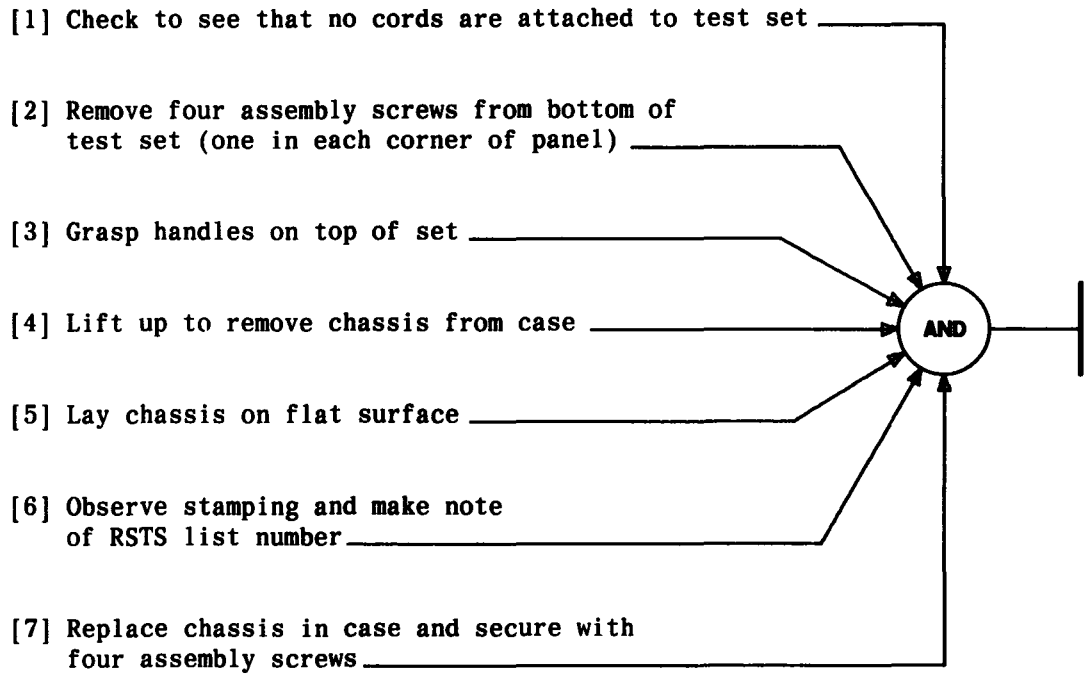

IDENTIFY LIST NUMBER OF ROTL SYSTEM TEST SET (RSTS)

[1] See NOTE 1

[2] Using **3P15A** cord, connect RSTS **–48V INPUT** jack [FIG. 1, Page 2] to office –48V battery supply

[3] At RSTS, set controls according to TABLE A

AND → Page 3

[4] Momentarily depress **DATA RCV** pushbutton [FIG. 1]

Lamps **SCK**, **NEW**, **NE-FN**, and **CHK2** lighted; digital readout indicates 000

[5] Set **INTERROGATOR START** switch to **ON**

Lamps **INT START**, **ON**, **SCK**, **DATA RDY**, **OLD**, **FE-NF**, **CHK1**, and **TEST FAULT 7** lighted; digital readout indicates –7-.-.-. Lamps **NEW**, **NE-FN**, and **CHK2** off

TABLE A

CONTROL	POSITION
TEST PREPARATION	**INT CHK**
TEST REQUEST	**INT CHK**
SELECT	**EXPANDED**
MFO	**MAN**
ROS	**HOLD**
TST	**ON HOOK**
DB insertion pads	Normal (Nos. not visable)
INTERROGATOR START	**OFF**
VOL	Full clockwise

NOTE 1
If any one of RSTS self-checks fail, the test set should be returned for repair according to local instructions

PERFORM ROTL SYSTEM TEST SET (RSTS) SELF-CHECK LIST 1 THROUGH 3

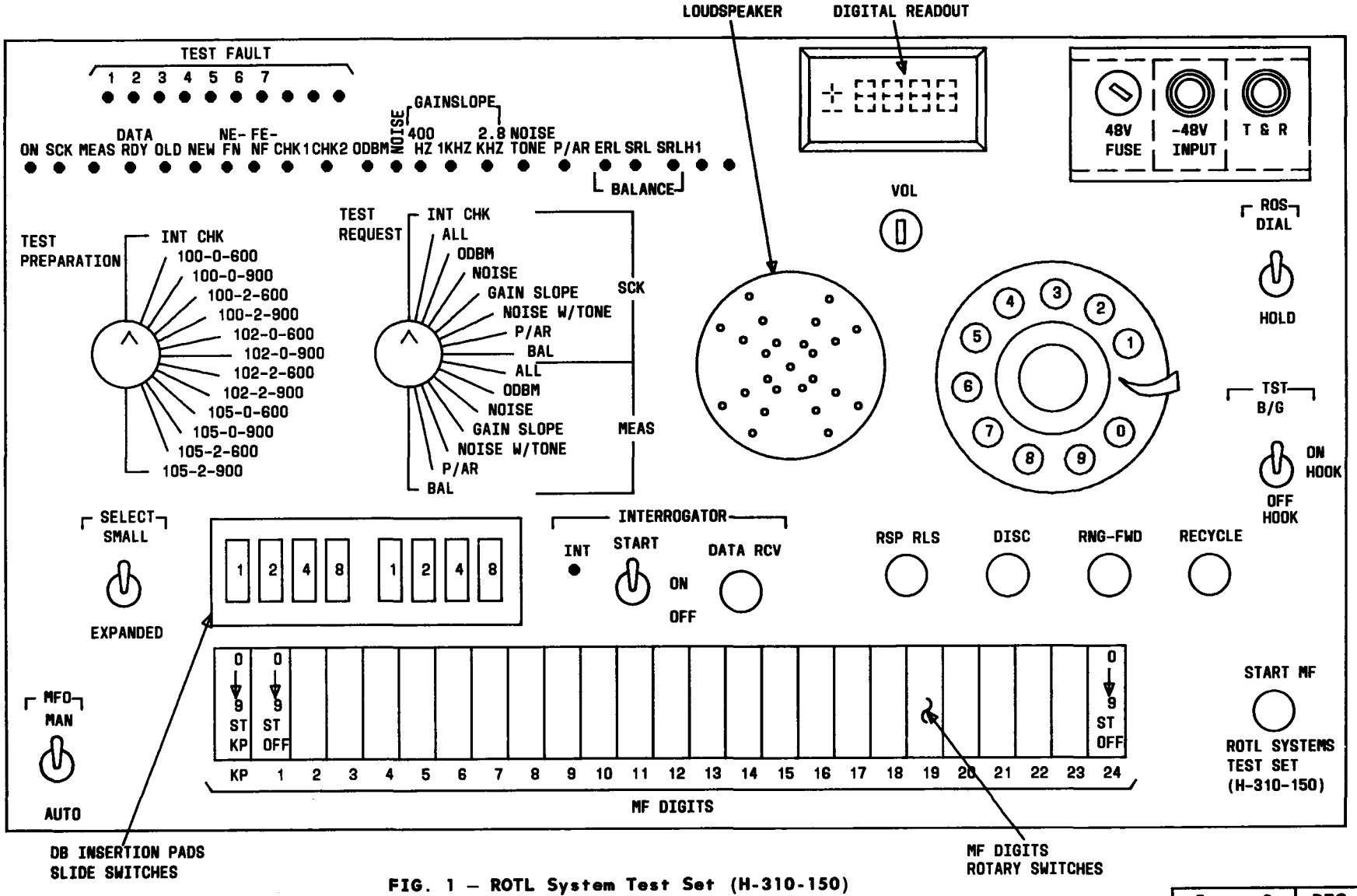

FIG. 1 – ROTL System Test Set (H-310-150)

PERFORM ROTL SYSTEM TEST SET (RSTS) SELF-CHECK LIST 1 THROUGH 3

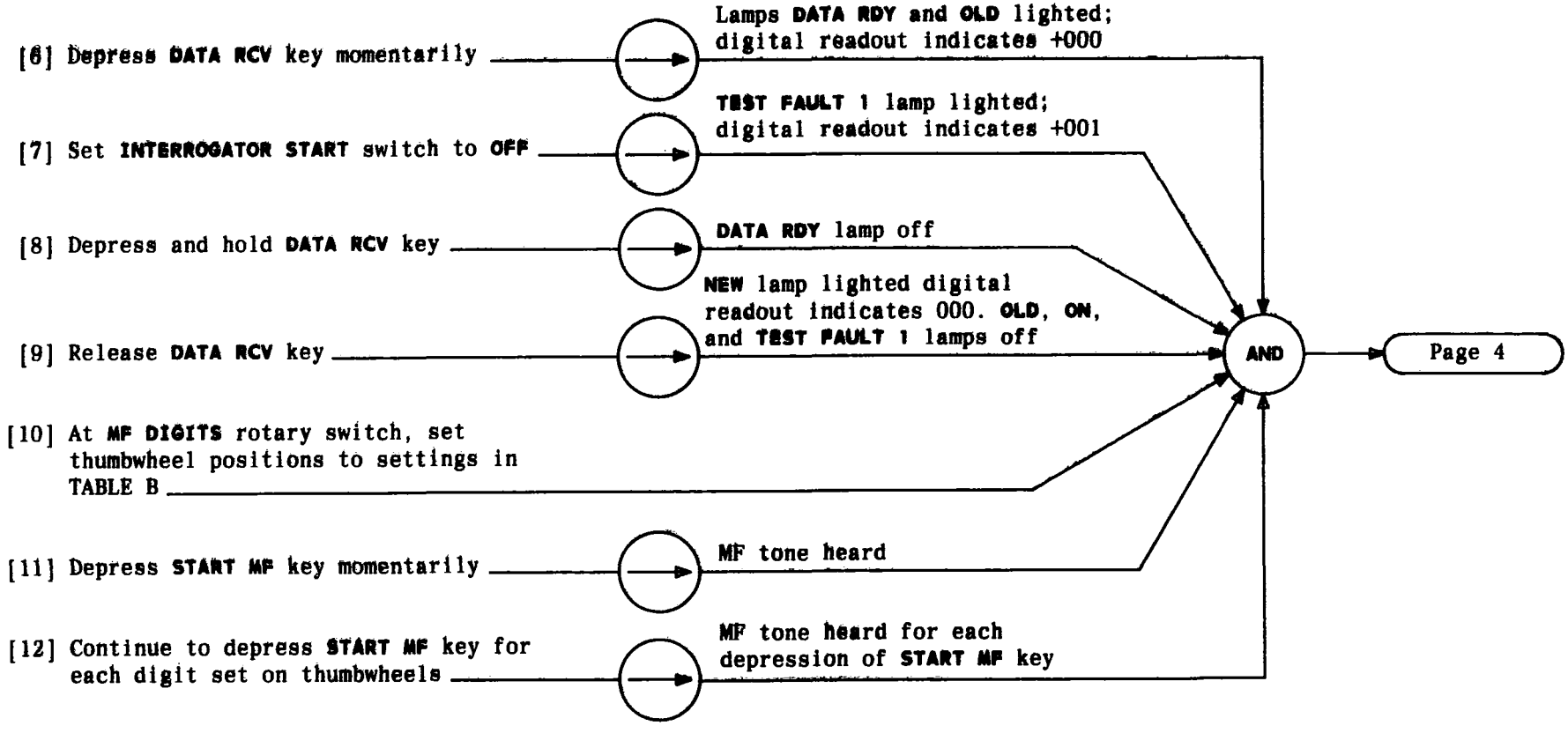

TABLE B

THUMBWHEEL																								
POSITION	KP	1	2	3	4	5	6	7	8	9	10	11	12	13	14	15	16	17	18	19	20	21	22	23	24
SETTING	KP	1	1	2	2	3	3	4	4	5	5	6	6	7	7	8	8	9	9	0	0	1	1	OF	ST

PERFORM ROTL SYSTEM TEST SET (RSTS) SELF-CHECK LIST 1 THROUGH 3

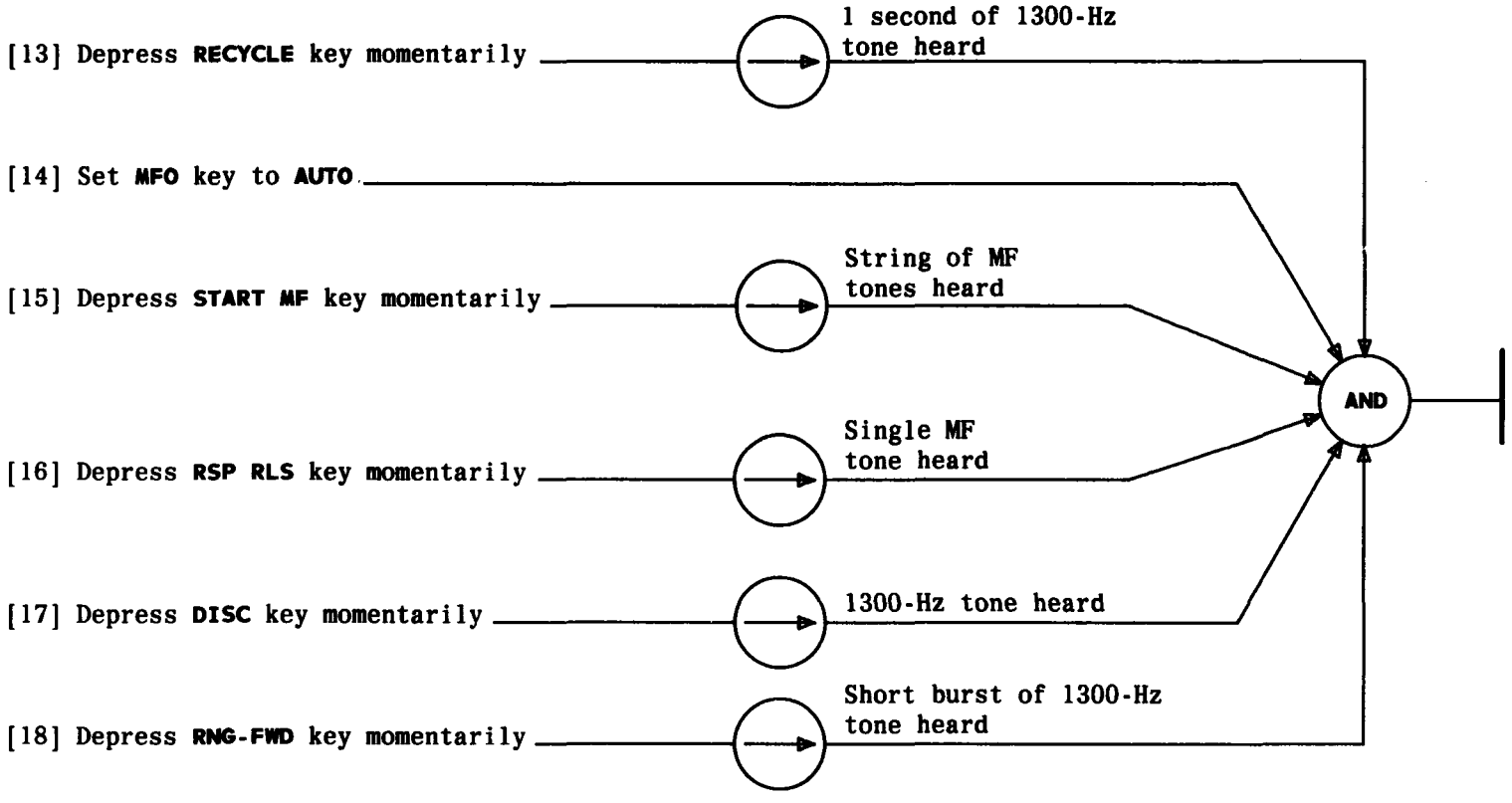

PERFORM ROTL SYSTEM TEST SET (RSTS) SELF-CHECK LIST 1 THROUGH 3

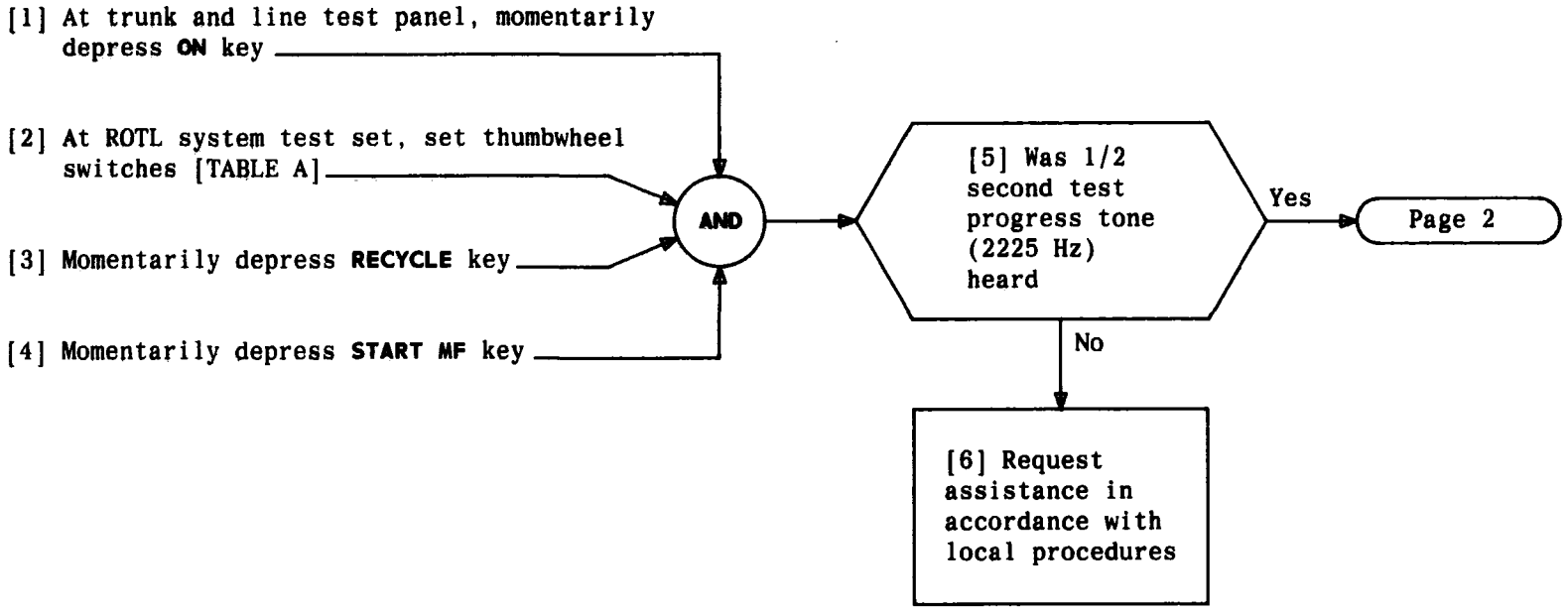

TABLE A

THUMBWHEEL																								
POSITION	KP	1	2	3	4	5	6	7	8	9	10	11	12	13	14	15	16	17	18	19	20	21	22	23	24
SETTING	KP	5	5	5	ST	◄ OFF ►																			

MAKE SECURITY CALLBACK UNLOCK REQUEST USING H-310-150 ROTL SYSTEM TEST SET (RSTS)

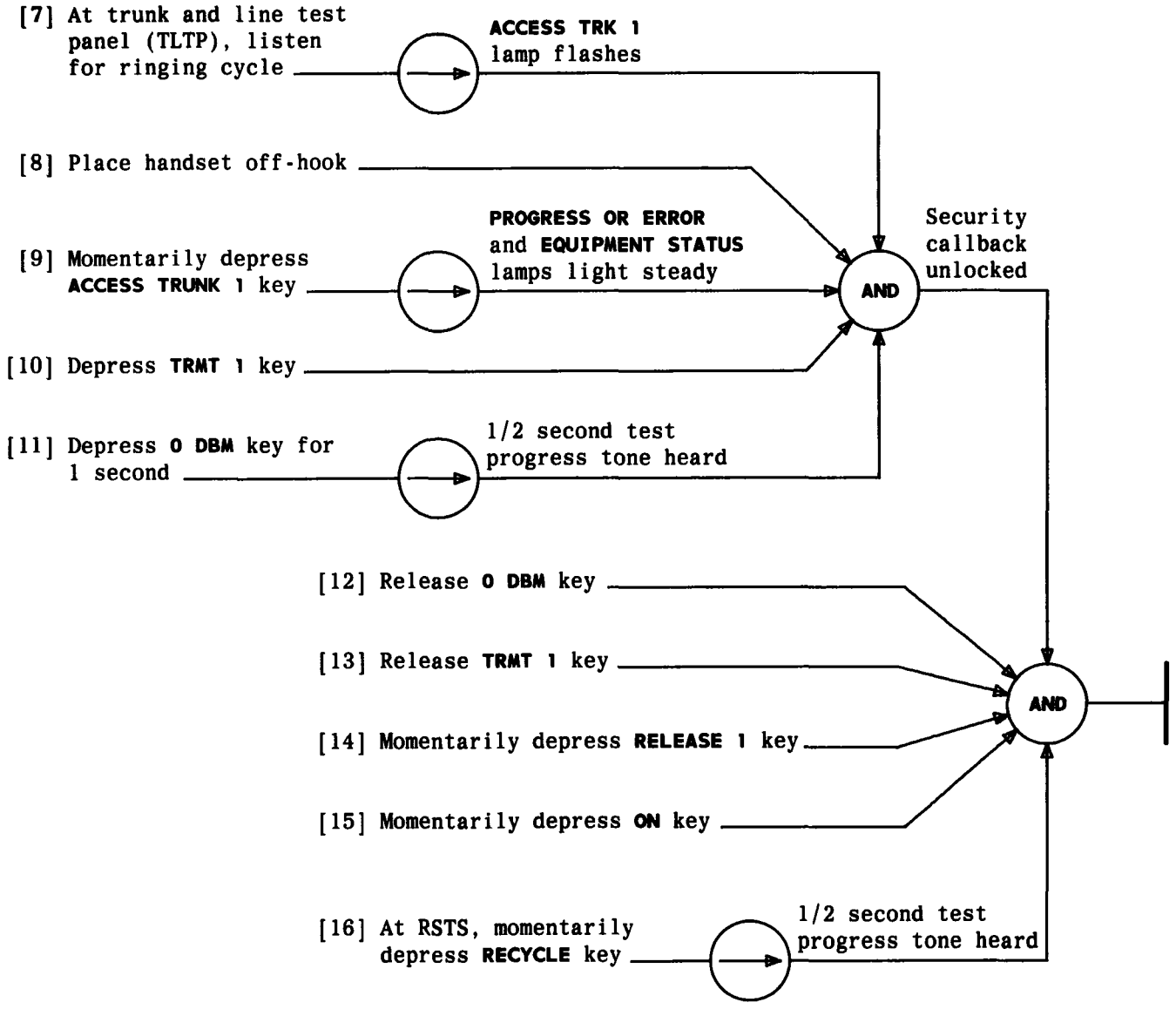

MAKE SECURITY CALLBACK UNLOCK REQUEST USING H-310-150 ROTL SYSTEM TEST SET (RSTS)

[1] Select outgoing trunk which terminates in office that has 100-type test line [NOTE 1].

[2] Record trunk group number, trunk member number, 100-type far-end test line directory number, estimated measured loss (EML), and noise requirement of trunk under test (TUT).

[3] At maintenance TTY, enter:
RMV:TRK(*a*,*b*), LKO;UCL!
(*a* = trunk group number)
(*b* = member number)

[4] At RSTS [FIG. 1, Page 2], set controls according to TABLE A.

[5] Set MF digit thumbwheels 0 through 3 according to TABLE B.

AND

Page 3

TABLE A

CONTROL	POSITION
TEST PREPARATION	100-0-900
TEST REQUEST	MEAS ALL
SELECT	EXPANDED
MFO	AUTO
ROS	DIAL
TST	ON HOOK
DB insertion pads	Normal (Nos. not visable)
INTERROGATOR START	OFF
VOL	Full clockwise

TABLE B

					GROUP NUMBER			MEMBER NUMBER			FAR-END TEST LINE NUMBER													
POSITION	KP	1	2	3	4	5	6	7	8	9	10	11	12	13	14	15	16	17	18	19	20	21	22	23	24
SETTING	KP	1	0	0														ST	OFF	OFF	OFF	OFF	OFF	OFF	OFF

NOTE 1
A 100-type test line sends 1000-Hz 0-dBm tone for 10 seconds then connects a balance termination

TEST ROTL – 100-TYPE TEST LINE AT FAR END USING H-310-150 ROTL SYSTEM TEST SET (RSTS)

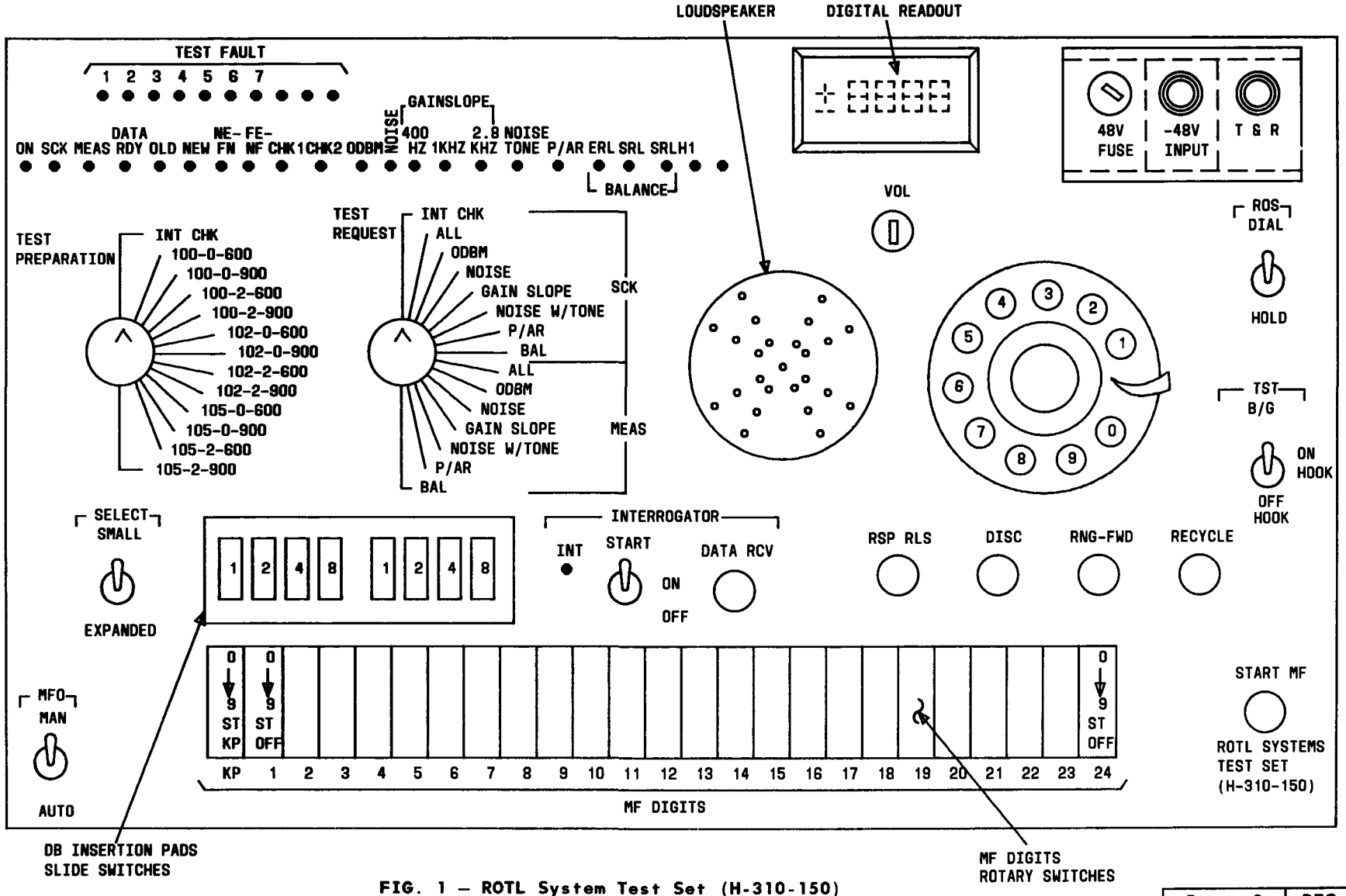

FIG. 1 – ROTL System Test Set (H-310-150)

TEST ROTL – 100-TYPE TEST LINE AT FAR END USING H-310-150 ROTL SYSTEM TEST SET (RSTS)

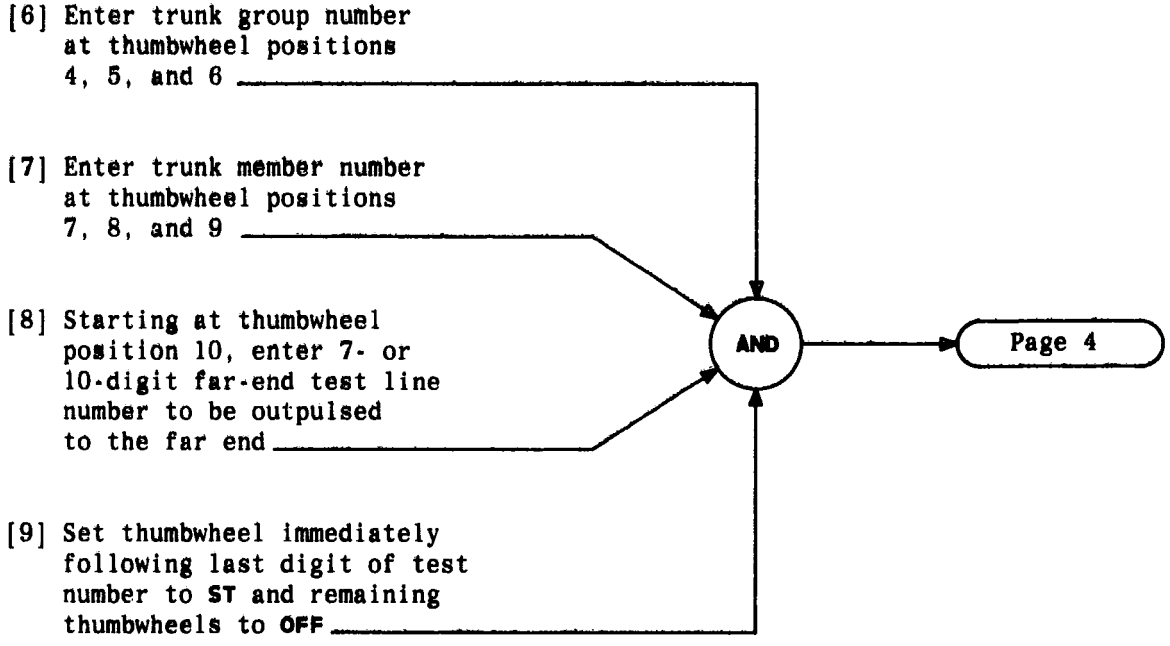

TEST ROTL — 100-TYPE TEST LINE AT FAR END USING H-310-150 ROTL SYSTEM TEST SET (RSTS)

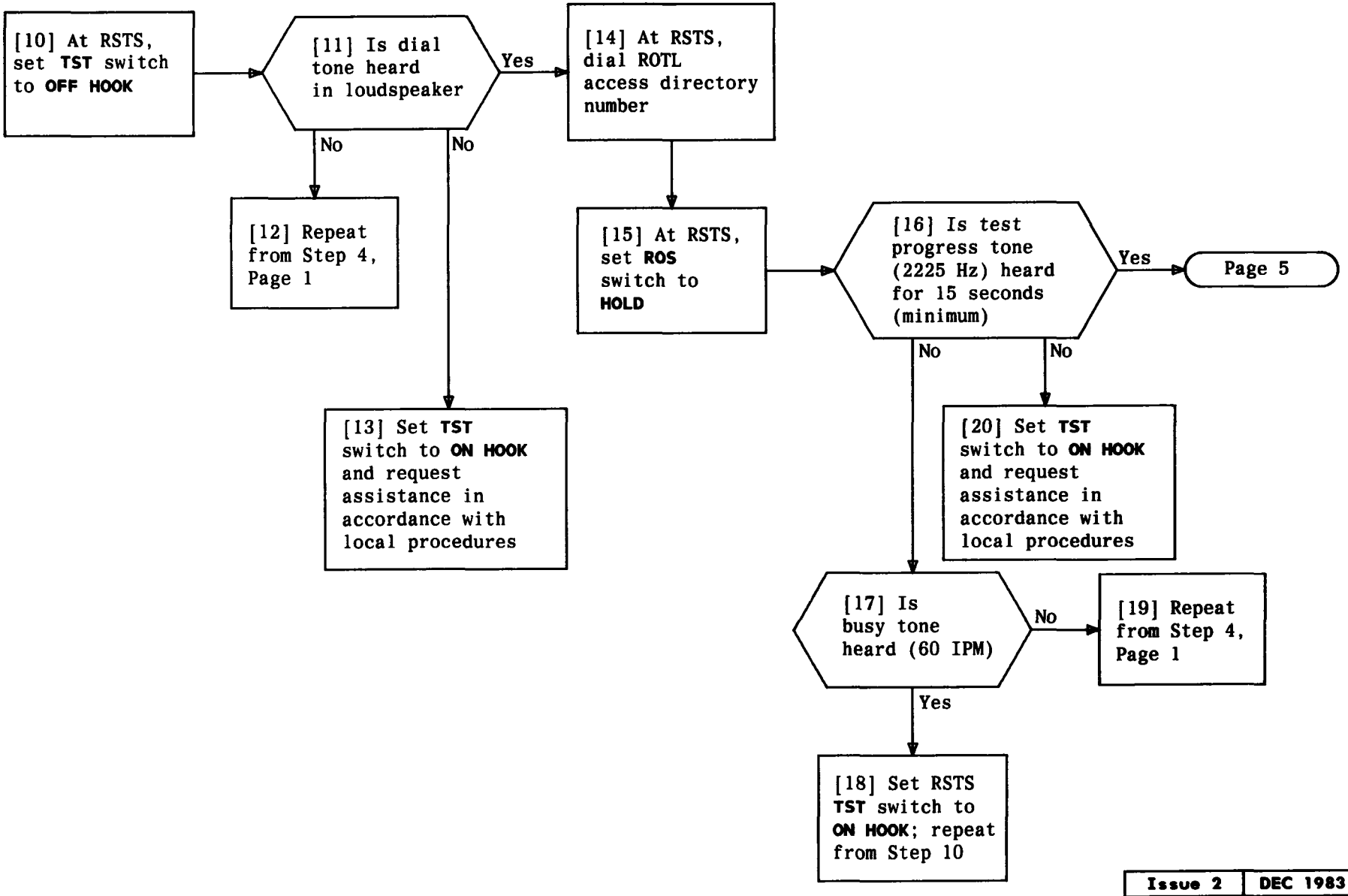

TEST ROTL – 100-TYPE TEST LINE AT FAR END USING H-310-150 ROTL SYSTEM TEST SET (RSTS)

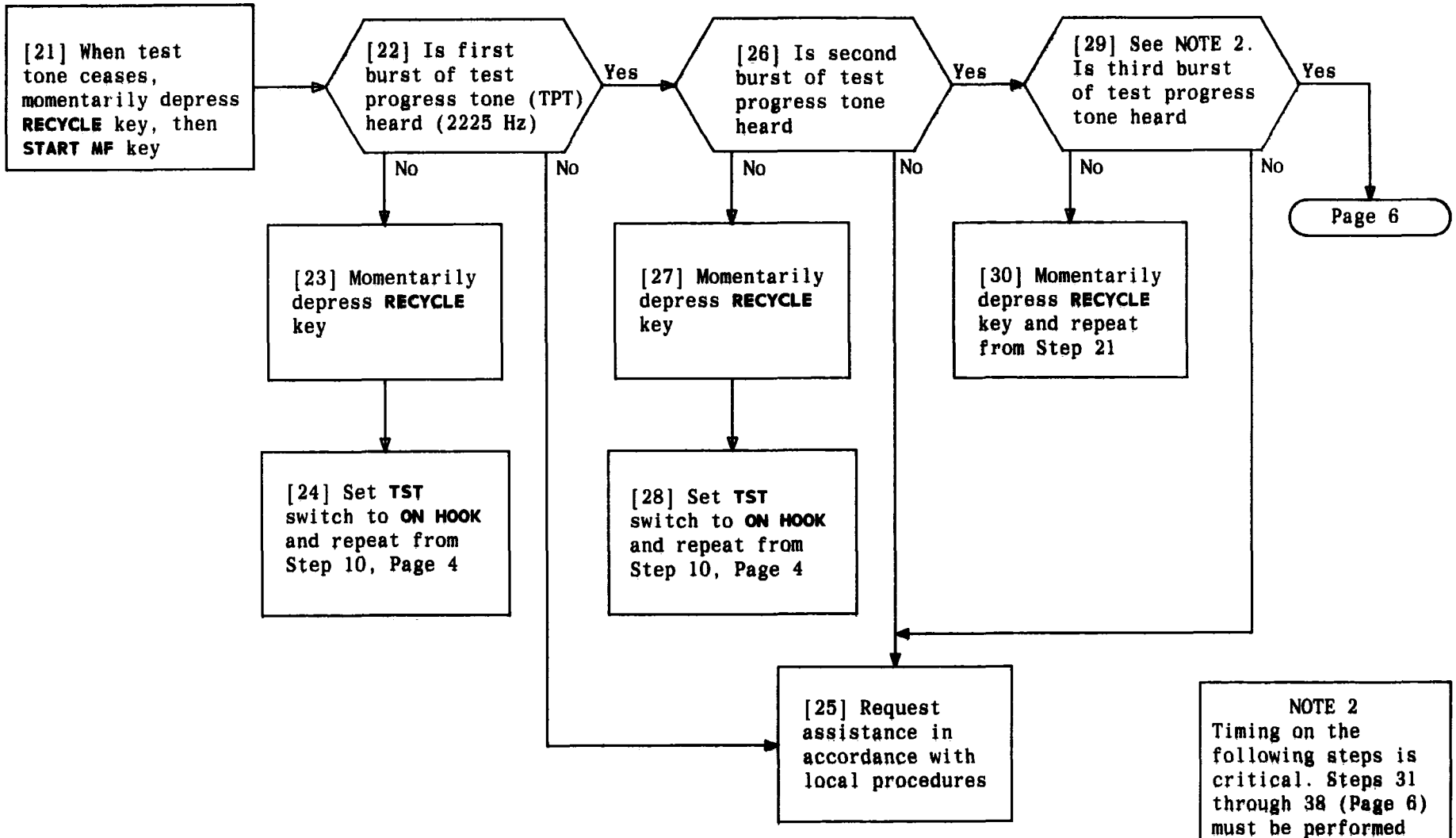

NOTE 2
Timing on the following steps is critical. Steps 31 through 38 (Page 6) must be performed within the indicated times or readings will be erroneous

TEST ROTL – 100-TYPE TEST LINE AT FAR END USING H-310-150 ROTL SYSTEM TEST SET (RSTS)

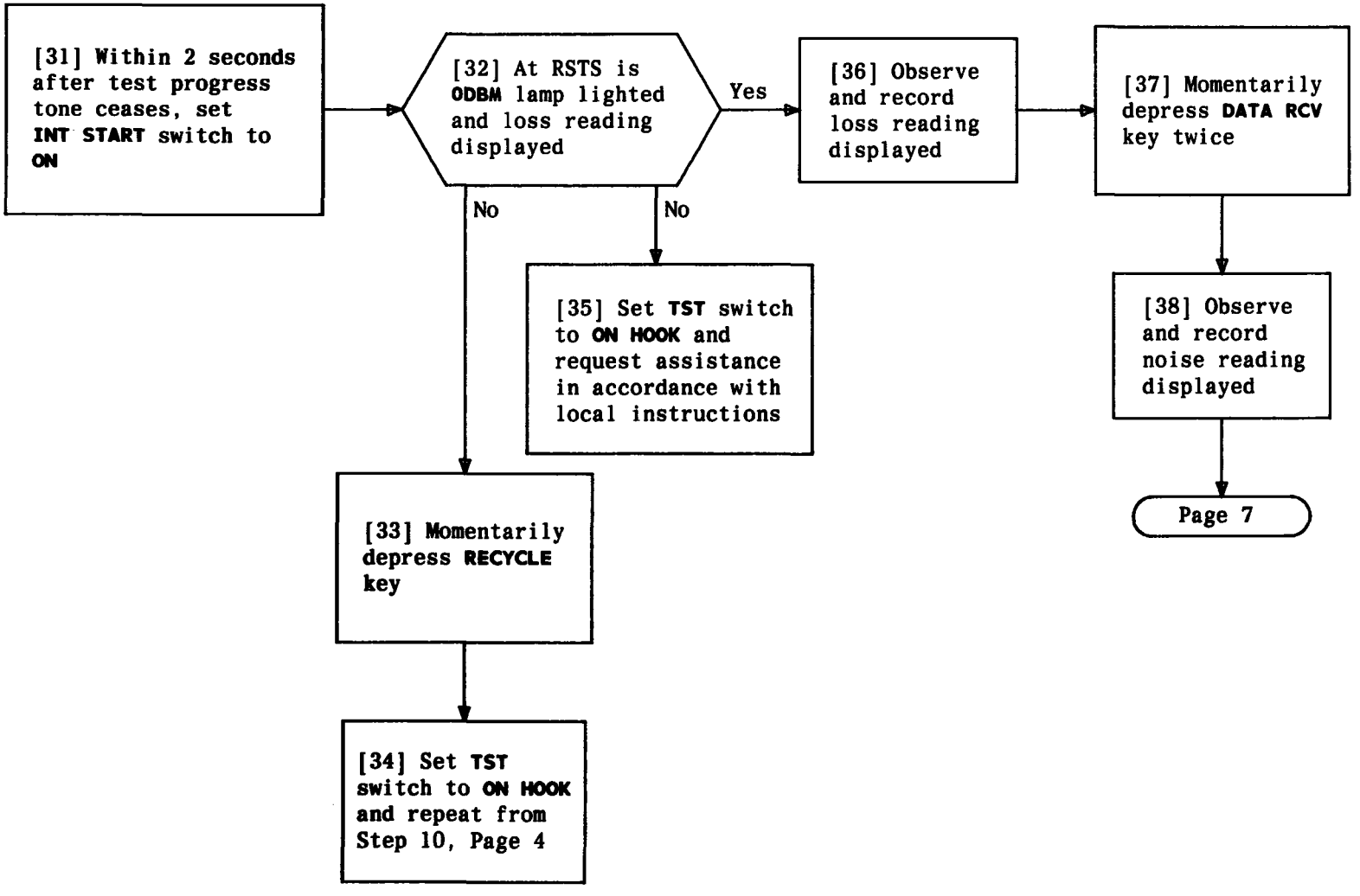

TEST ROTL – 100-TYPE TEST LINE AT FAR END USING H-310-150 ROTL SYSTEM TEST SET (RSTS)

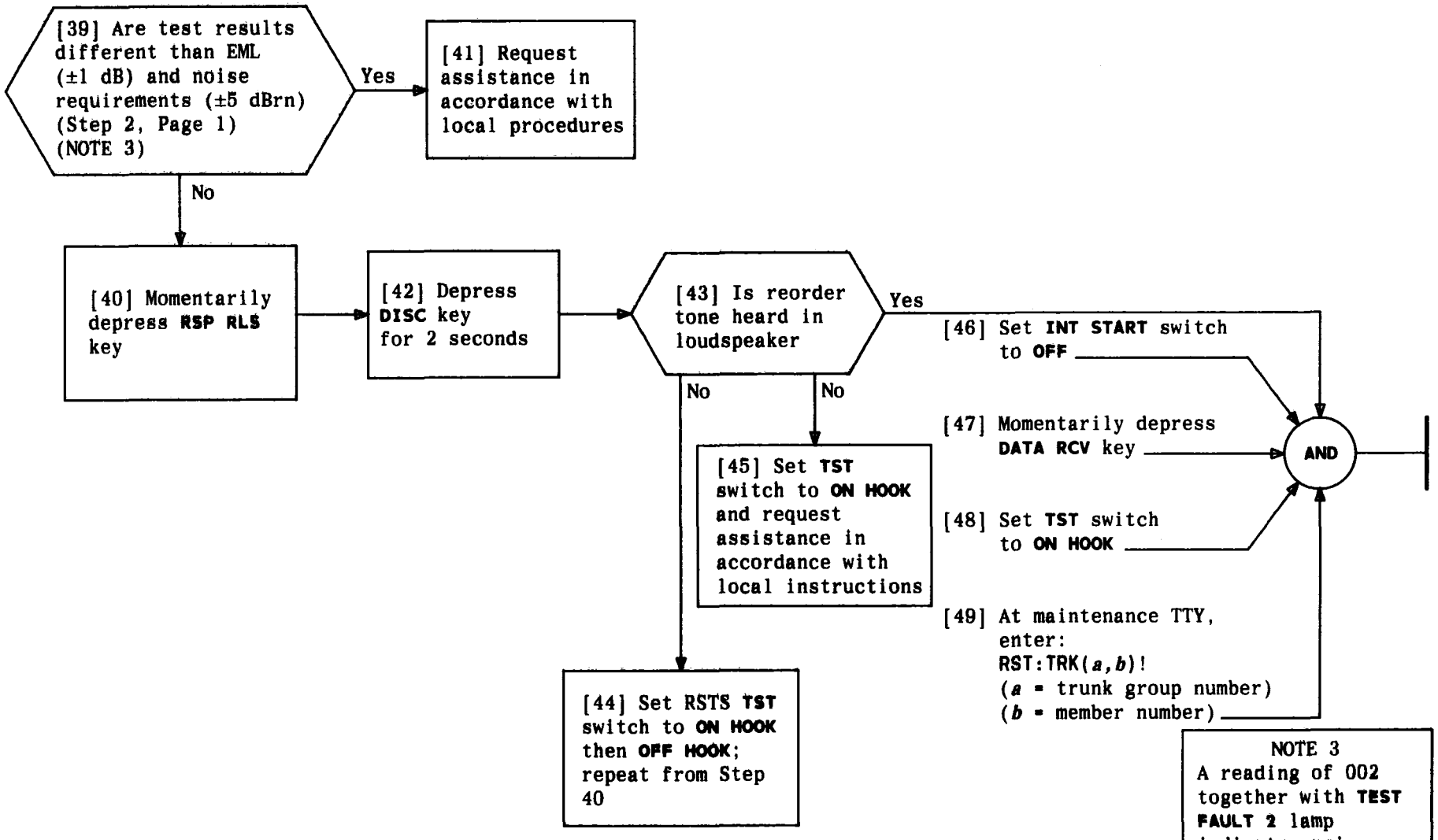

TEST ROTL – 100-TYPE TEST LINE AT FAR END USING H-310-150 ROTL SYSTEM TEST SET (RSTS)

[1] Select outgoing trunk which terminates in office that has 102-type test line [NOTE 1]

[2] Record trunk group number, trunk member number, 102-type far-end test line directory number, and estimated measured loss (EML) of trunk under test (TUT)

[3] At maintenance TTY, enter:
RMV:TRK(*a*,*b*), LKO;UCL!
(*a* = trunk group number)
(*b* = member number)

[4] At RSTS [FIG. 1, Page 2], set controls according to TABLE A

[5] Set MF digit thumbwheels 0 through 3 according to TABLE B

AND → Page 3

TABLE A

CONTROL	POSITION
TEST PREPARATION	102-0-900
TEST REQUEST	MEAS ALL
SELECT	EXPANDED
MFO	AUTO
ROS	DIAL
TST	ON HOOK
DB insertion pads	Normal (Nos. not visable)
INTERROGATOR START	OFF
VOL	Full clockwise

TABLE B

					GROUP NUMBER			MEMBER NUMBER			FAR-END TEST LINE NUMBER													
POSITION	KP	1	2	3	4	5	6	7	8	9	10	11	12	13	14	15	16	17	18	19	20	21	22	23	24
SETTING	KP	1	2	0														ST	OFF	OFF	OFF	OFF	OFF	OFF	OFF

NOTE 1
A 102-type test line sends 1000-Hz 0-dBm tone for 9 seconds followed by 1 second of on-hook balance termination, repeated continuously

TEST ROTL – 102-TYPE TEST LINE AT FAR END USING H-310-150 ROTL SYSTEM TEST SET (RSTS)

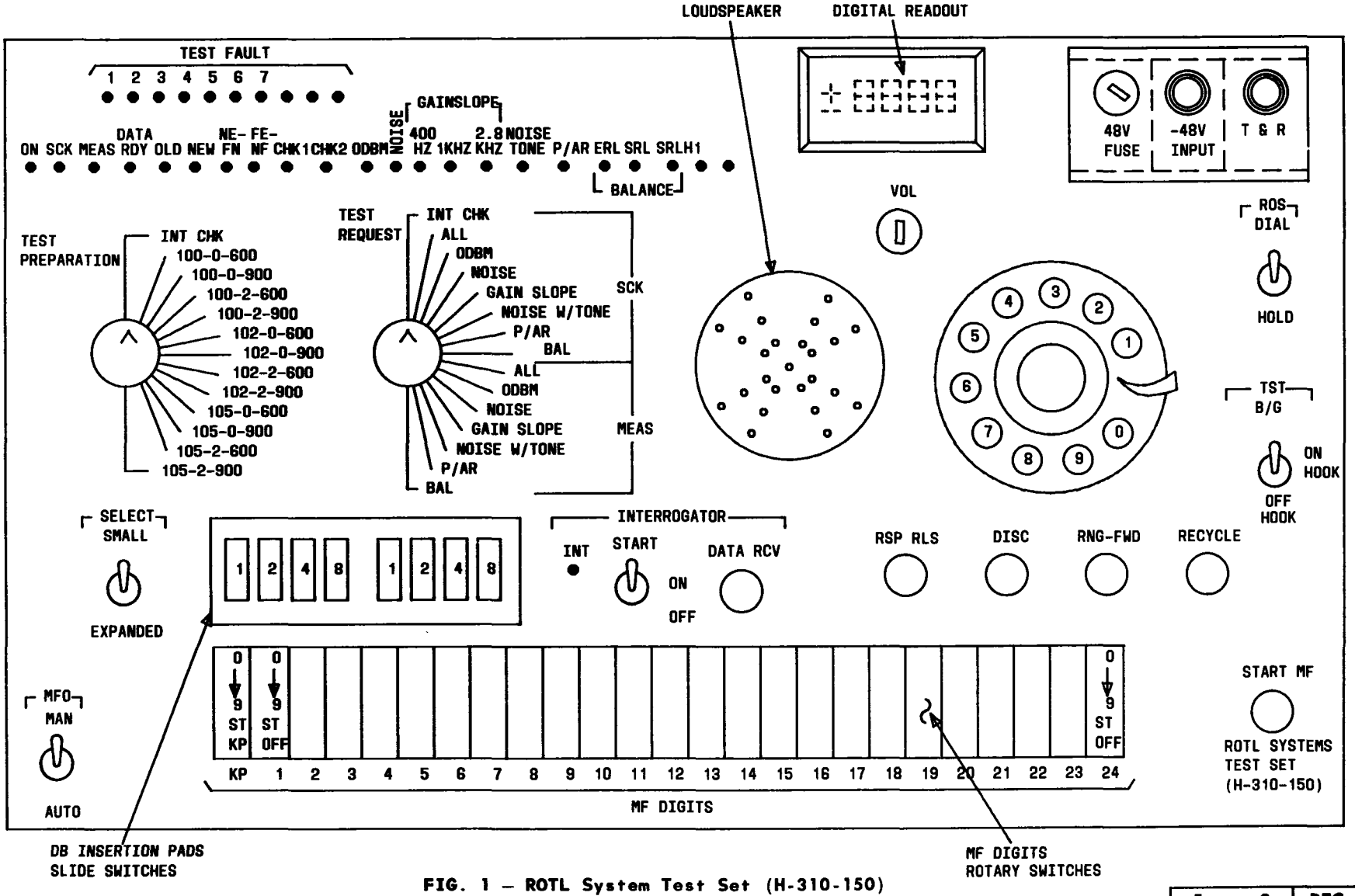

FIG. 1 – ROTL System Test Set (H-310-150)

TEST ROTL – 102-TYPE TEST LINE AT FAR END USING H-310-150 ROTL SYSTEM TEST SET (RSTS)

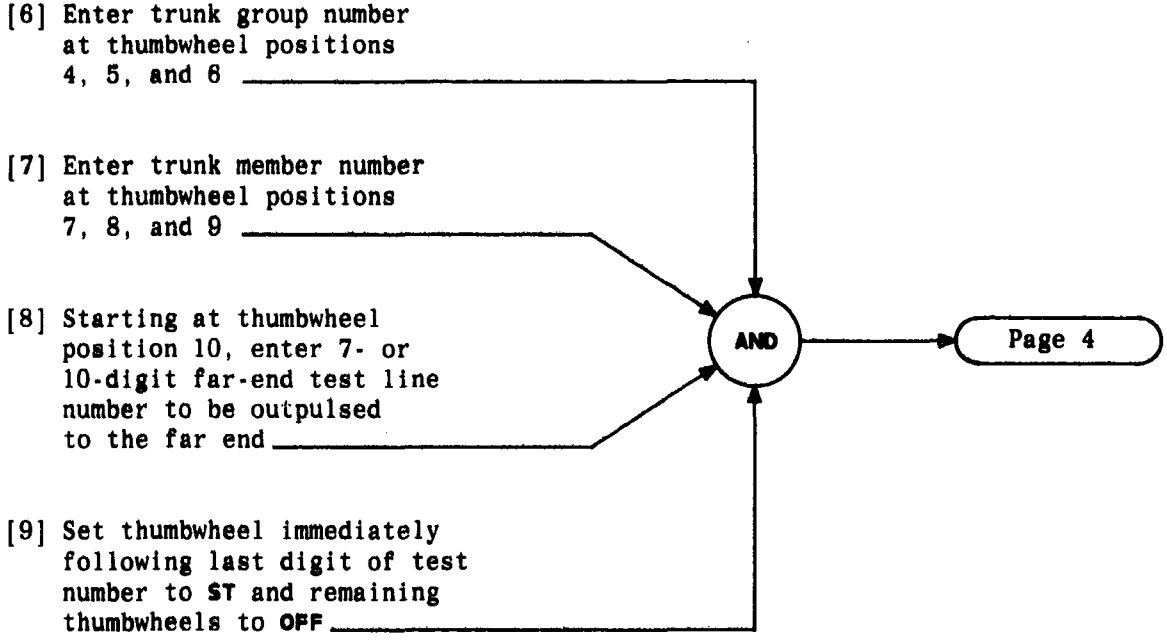

TEST ROTL – 102-TYPE TEST LINE AT FAR END USING H-310-150 ROTL SYSTEM TEST SET (RSTS)

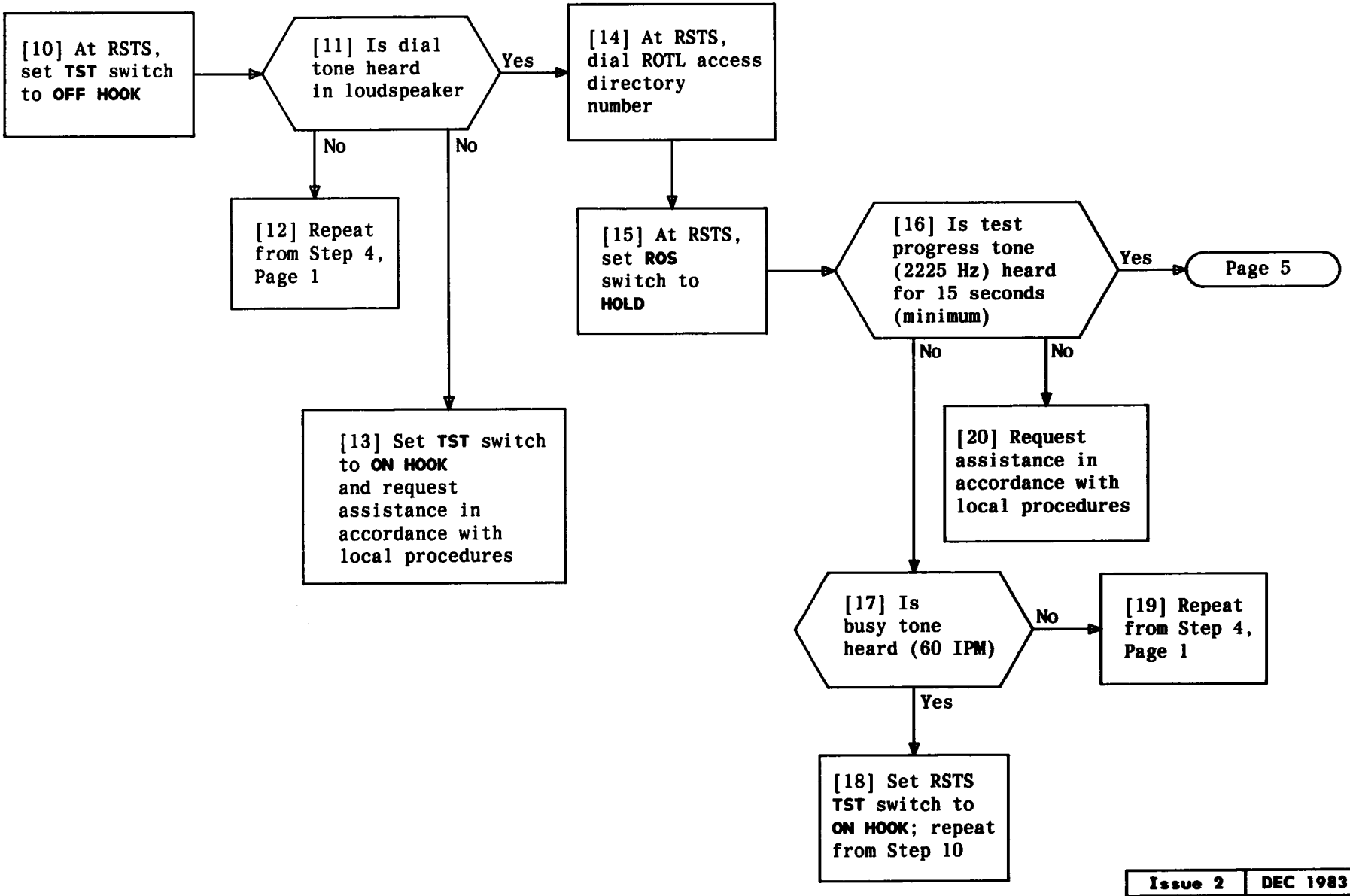

TEST ROTL – 102-TYPE TEST LINE AT FAR END USING H-310-150 ROTL SYSTEM TEST SET (RSTS)

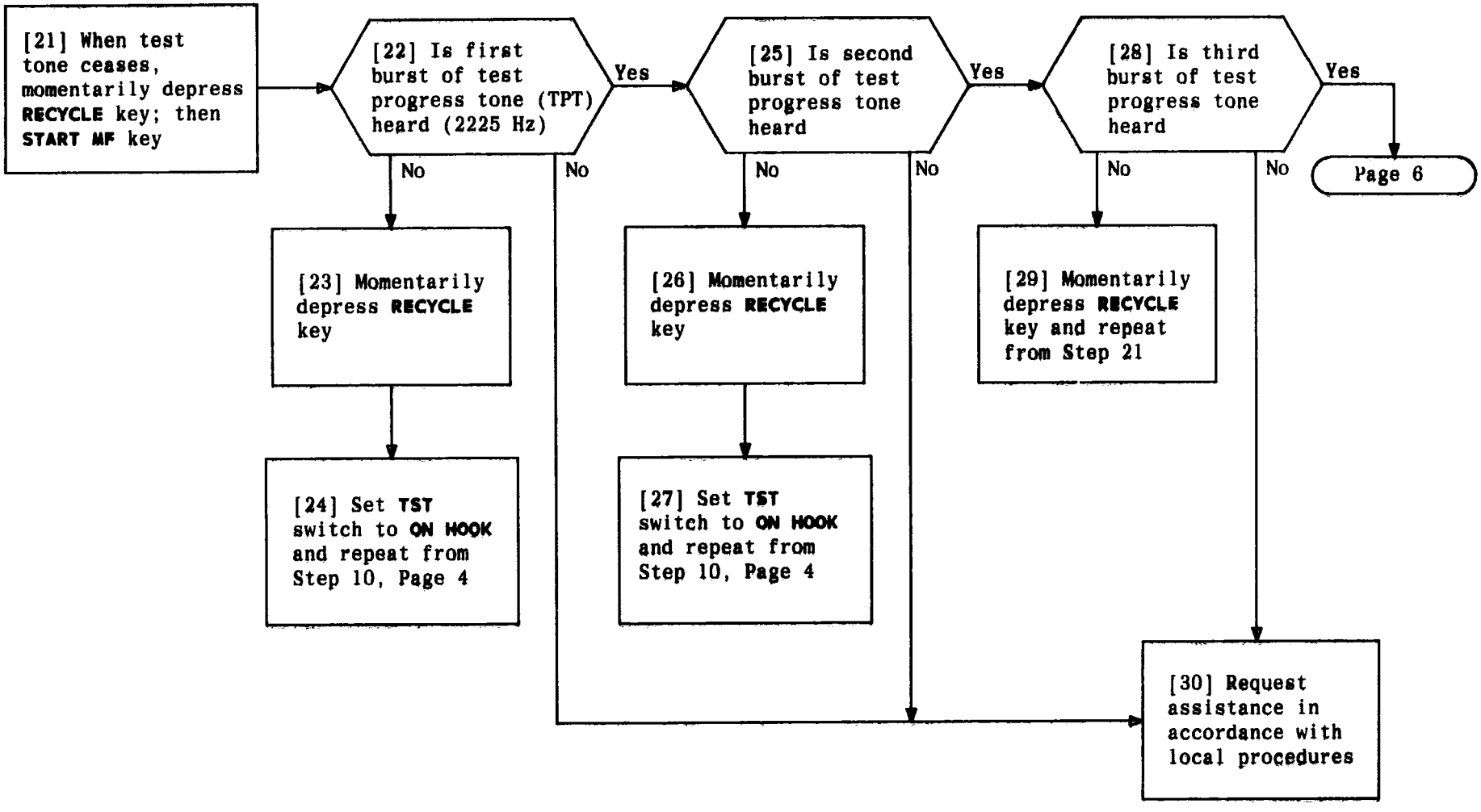

TEST ROTL – 102-TYPE TEST LINE AT FAR END USING H-310-150 ROTL SYSTEM TEST SET (RSTS)

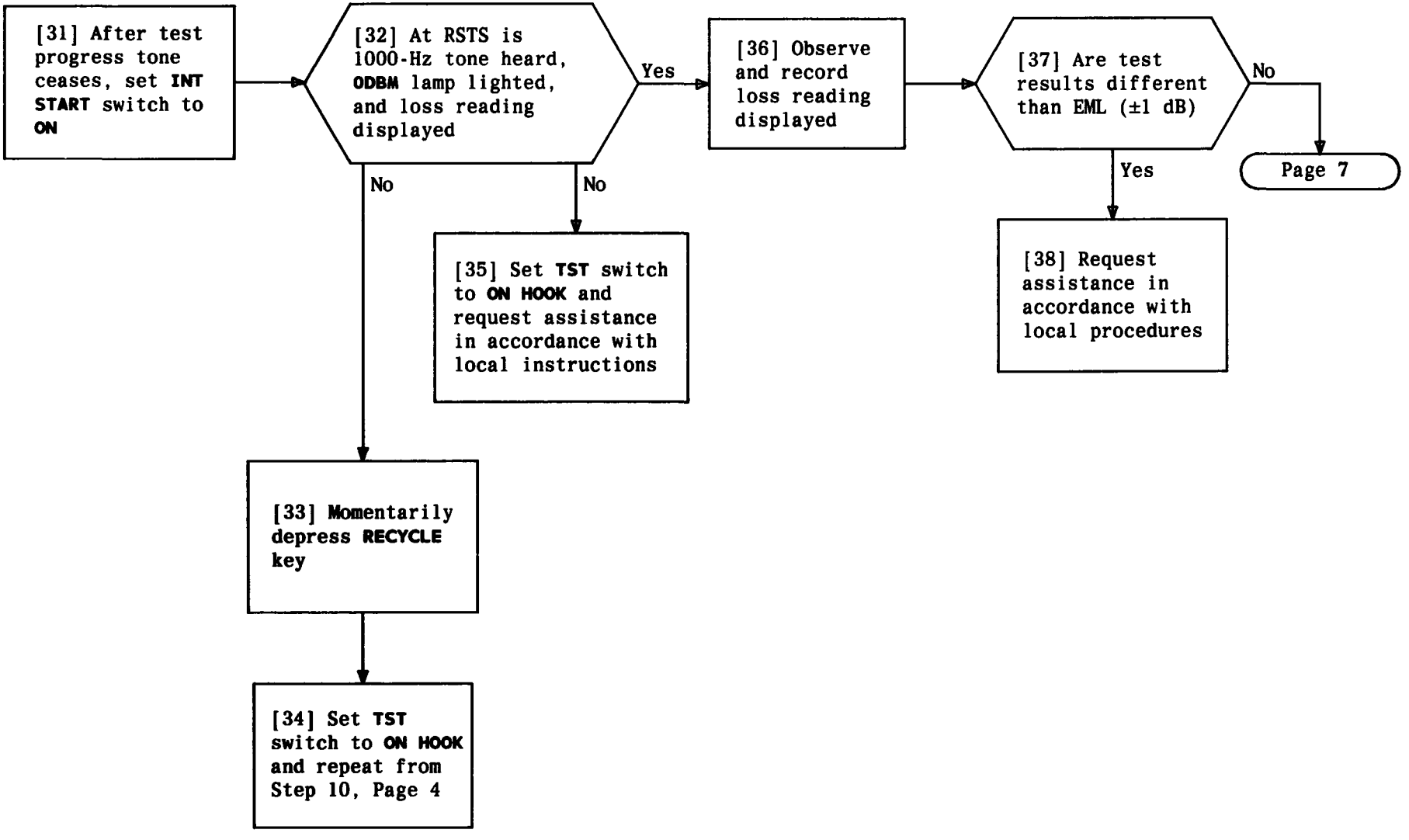

TEST ROTL – 102-TYPE TEST LINE AT FAR END USING H-310-150 ROTL SYSTEM TEST SET (RSTS)

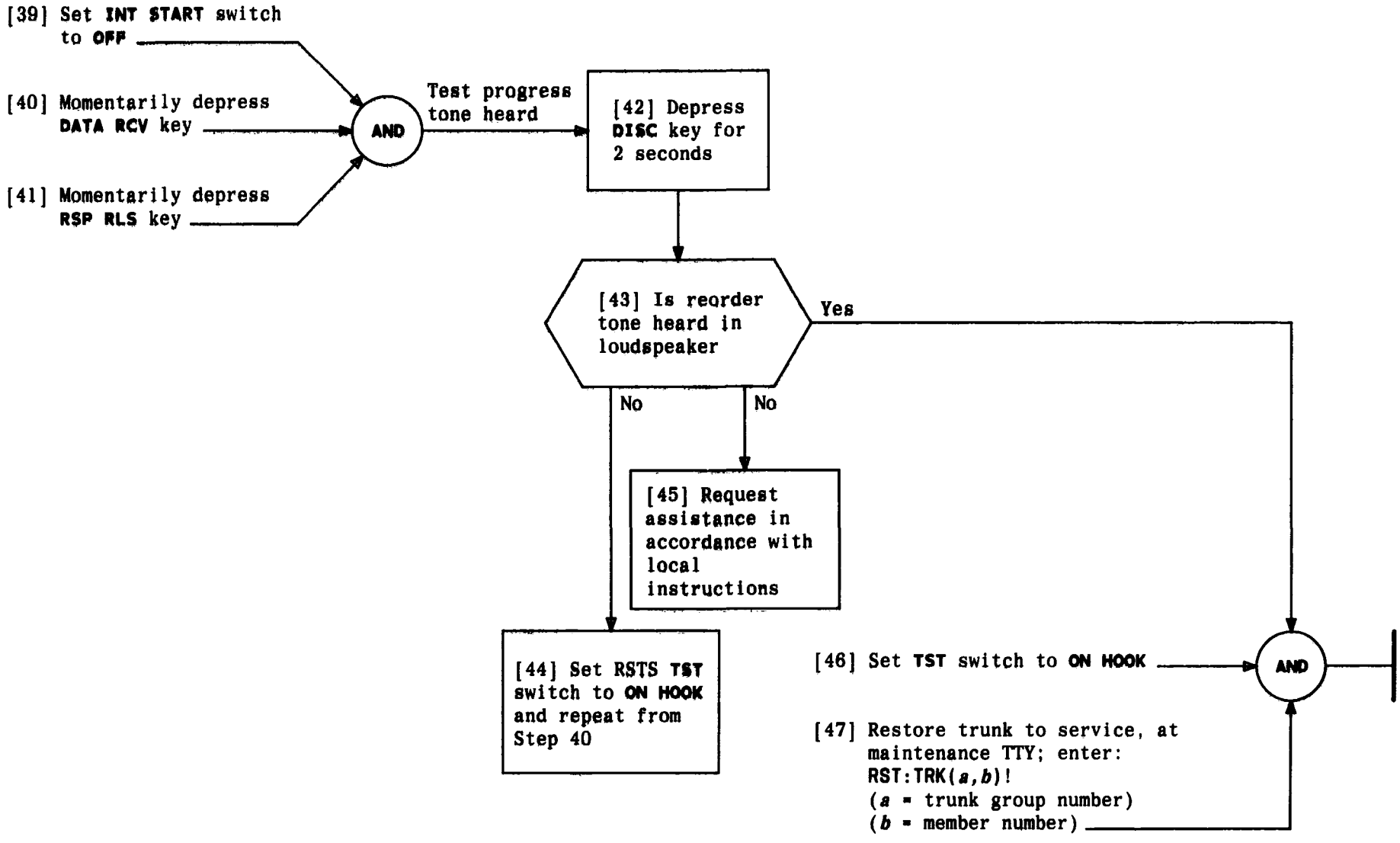

TEST ROTL — 102-TYPE TEST LINE AT FAR END USING H-310-150 ROTL SYSTEM TEST SET (RSTS)

[1] Select outgoing trunk which terminates in office that has 105-type test line [NOTE 1]

[2] Record trunk group number, trunk member number, 105-type test line directory number, estimated measured loss (EML), and noise requirements of trunk under test (TUT)

[3] At maintenance TTY, enter:
RMV:TRK(*a*,*b*), LKO;UCL!
(*a* = trunk group number)
(*b* = member number)

[4] At RSTS [FIG. 1, Page 2], set controls according to TABLE A

[5] Set MF digits thumbwheels 0 through 3 according to TABLE B

AND → Page 3

TABLE A

CONTROL	POSITION
TEST PREPARATION	105-0-900
TEST REQUEST	MEAS ALL
SELECT	EXPANDED
MFO	AUTO
ROS	DIAL
TST	ON HOOK
DB insertion pads	Normal (Nos. not visable)
INTERROGATOR START	OFF
VOL	Full clockwise

TABLE B

					GROUP NUMBER			MEMBER NUMBER			FAR-END TEST LINE NUMBER													
POSITION	KP	1	2	3	4	5	6	7	8	9	10	11	12	13	14	15	16	17	18	19	20	21	22	23	24
SETTING	KP	1	5	0														ST	OFF	OFF	OFF	OFF	OFF	OFF	OFF

NOTE 1
A 105-type test line is a line which enables a 52A responder to be accessed

TEST ROTL — 105-TYPE TEST LINE AT FAR END USING H-310-150 ROTL SYSTEM TEST SET (RSTS)

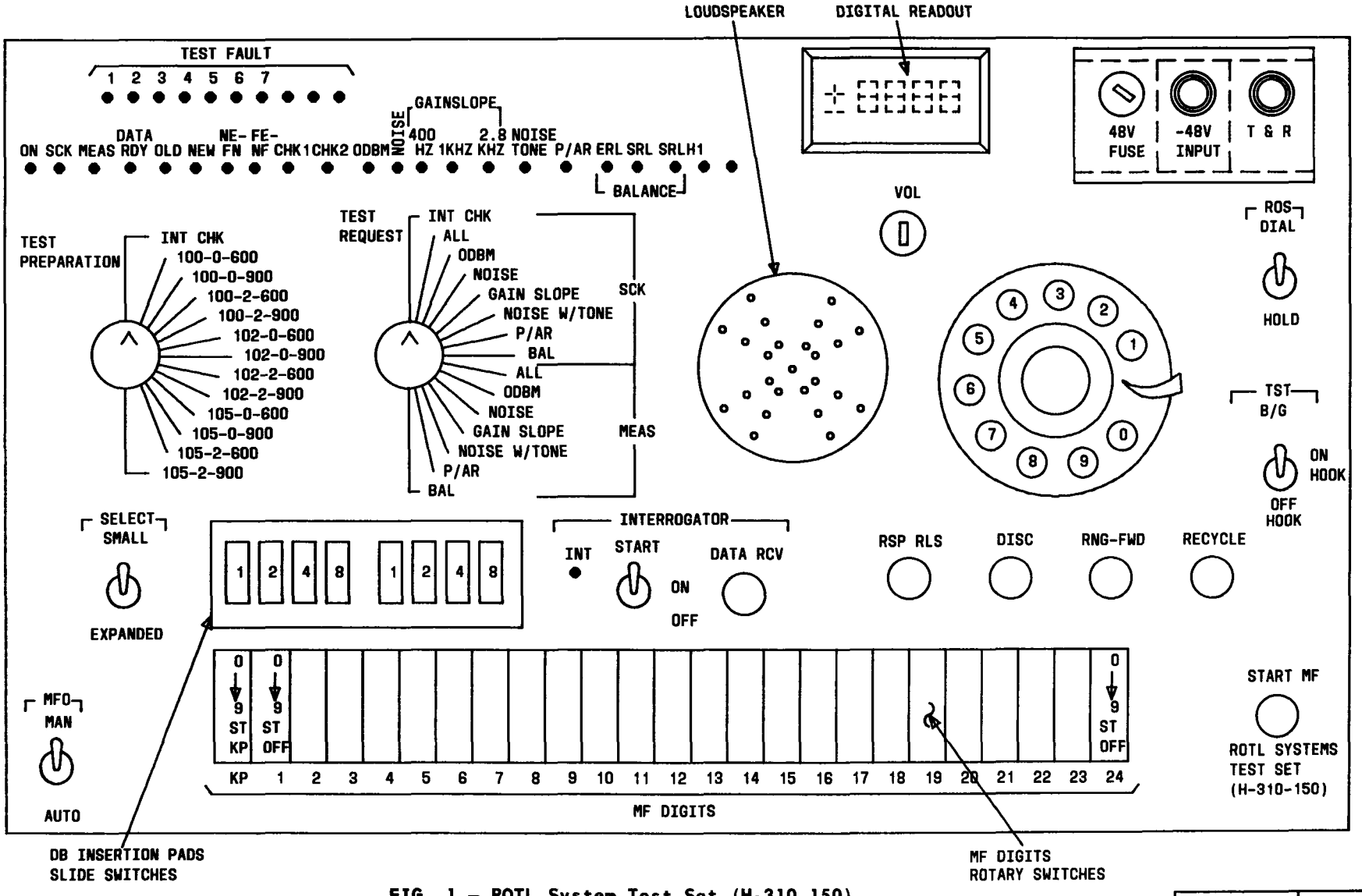

FIG. 1 – ROTL System Test Set (H-310-150)

TEST ROTL – 105-TYPE TEST LINE AT FAR END USING H-310-150 ROTL SYSTEM TEST SET (RSTS)

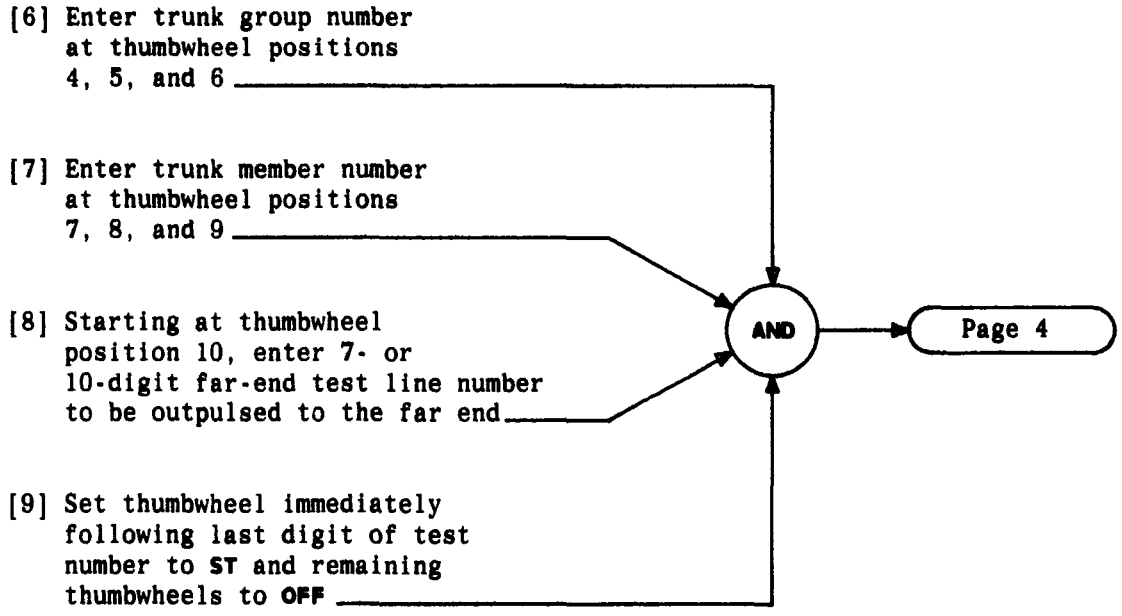

TEST ROTL – 105-TYPE TEST LINE AT FAR END USING H-310-150 ROTL SYSTEM TEST SET (RSTS)

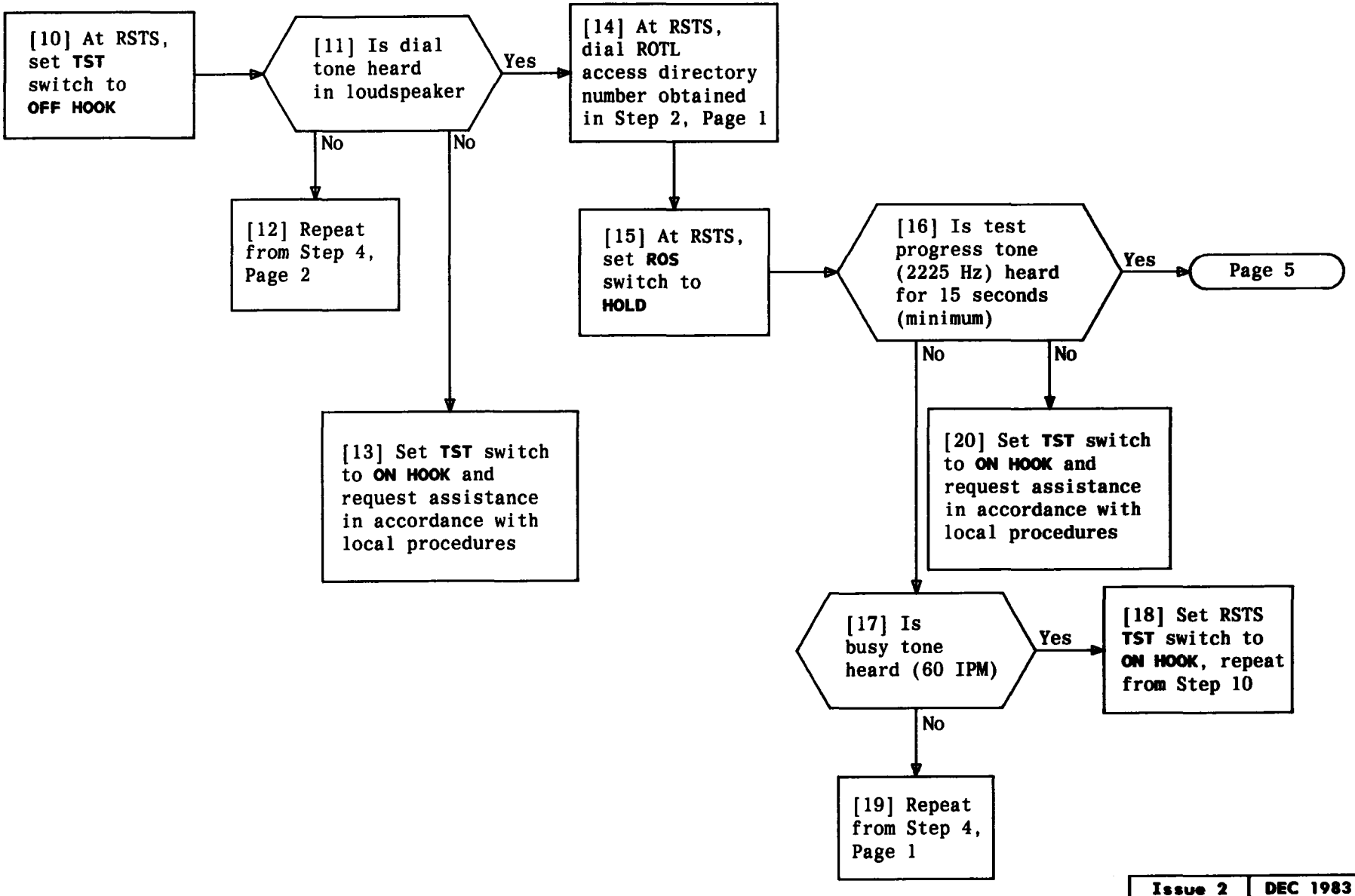

TEST ROTL – 105-TYPE TEST LINE AT FAR END USING H-310-150 ROTL SYSTEM TEST SET (RSTS)

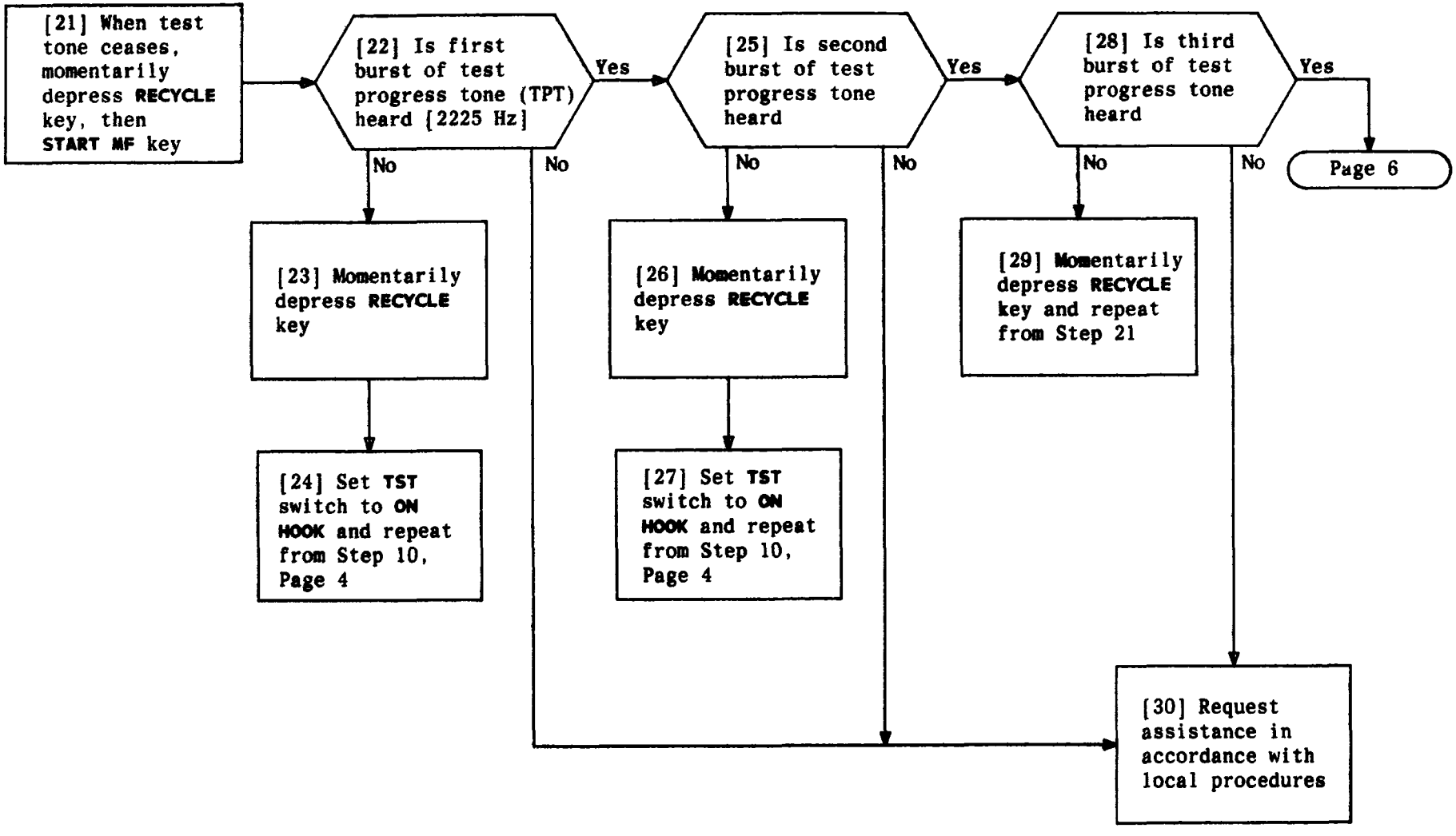

TEST ROTL – 105-TYPE TEST LINE AT FAR END USING H-310-150 ROTL SYSTEM TEST SET (RSTS)

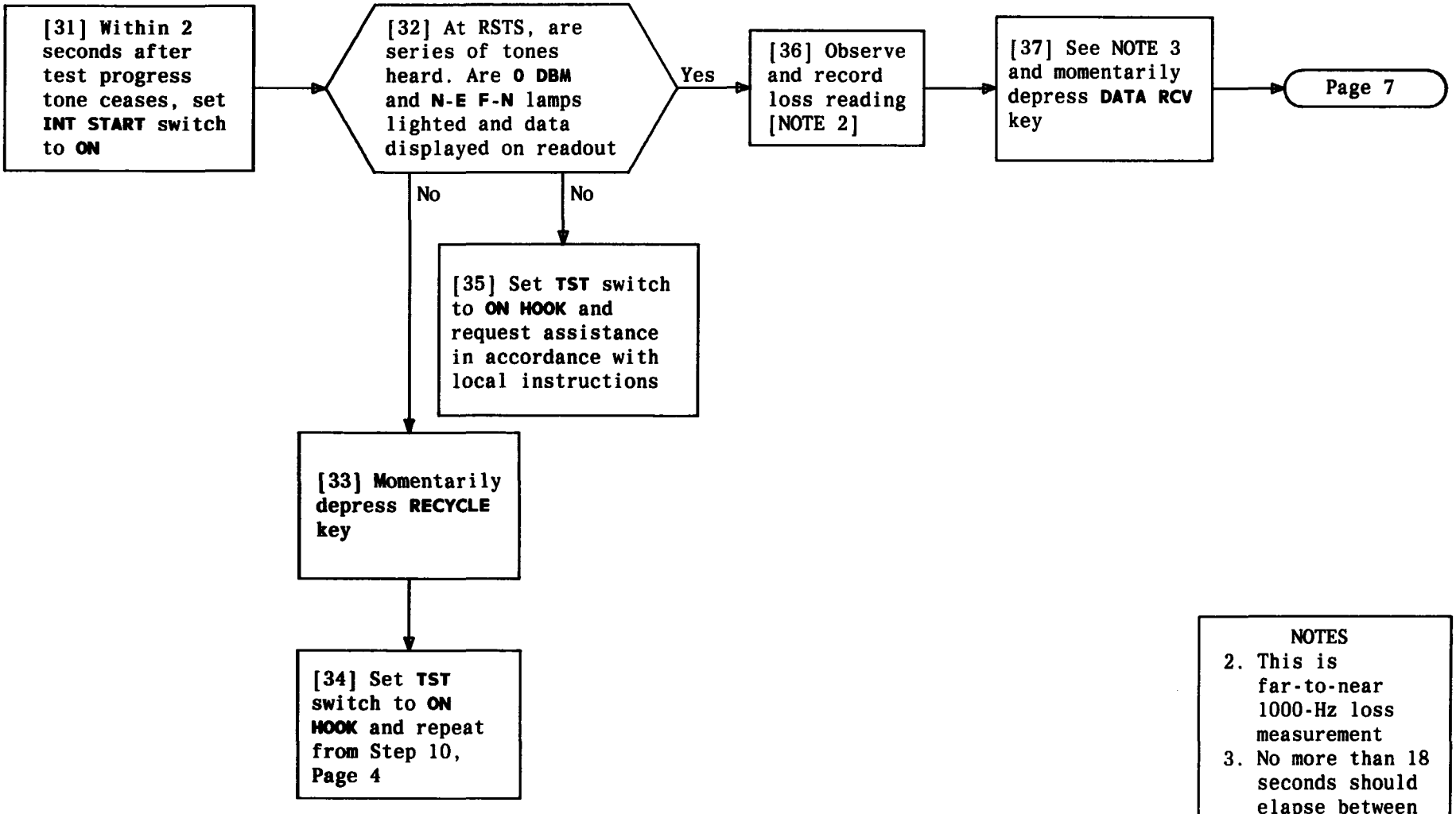

NOTES

2. This is far-to-near 1000-Hz loss measurement
3. No more than 18 seconds should elapse between depressions of DATA RCV key due to responder time-out

TEST ROTL – 105-TYPE TEST LINE AT FAR END USING H-310-150 ROTL SYSTEM TEST SET (RSTS)

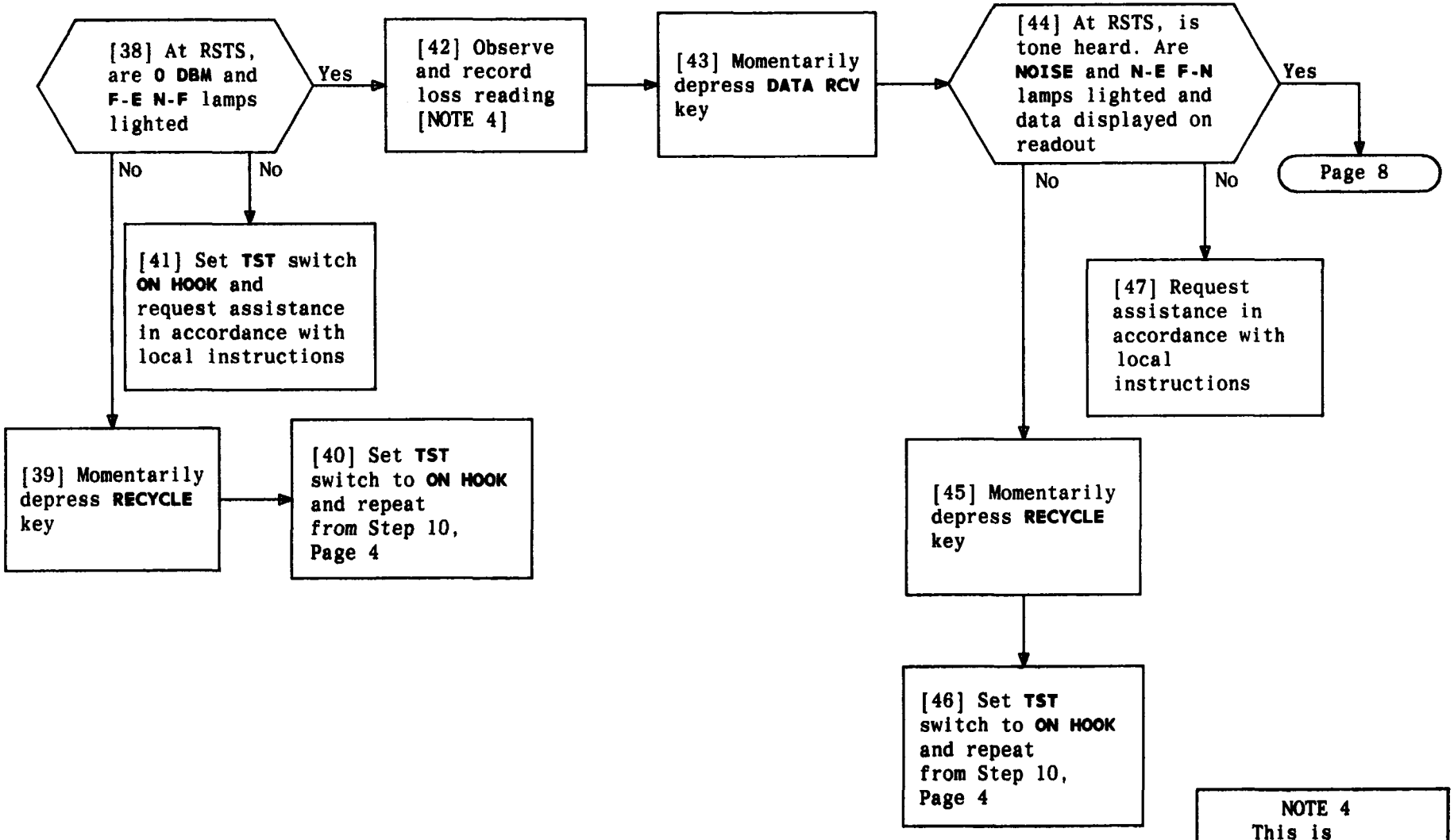

NOTE 4
This is near-to-far 1000-Hz loss measurement

TEST ROTL — 105-TYPE TEST LINE AT FAR END USING H-310-150 ROTL SYSTEM TEST SET (RSTS)

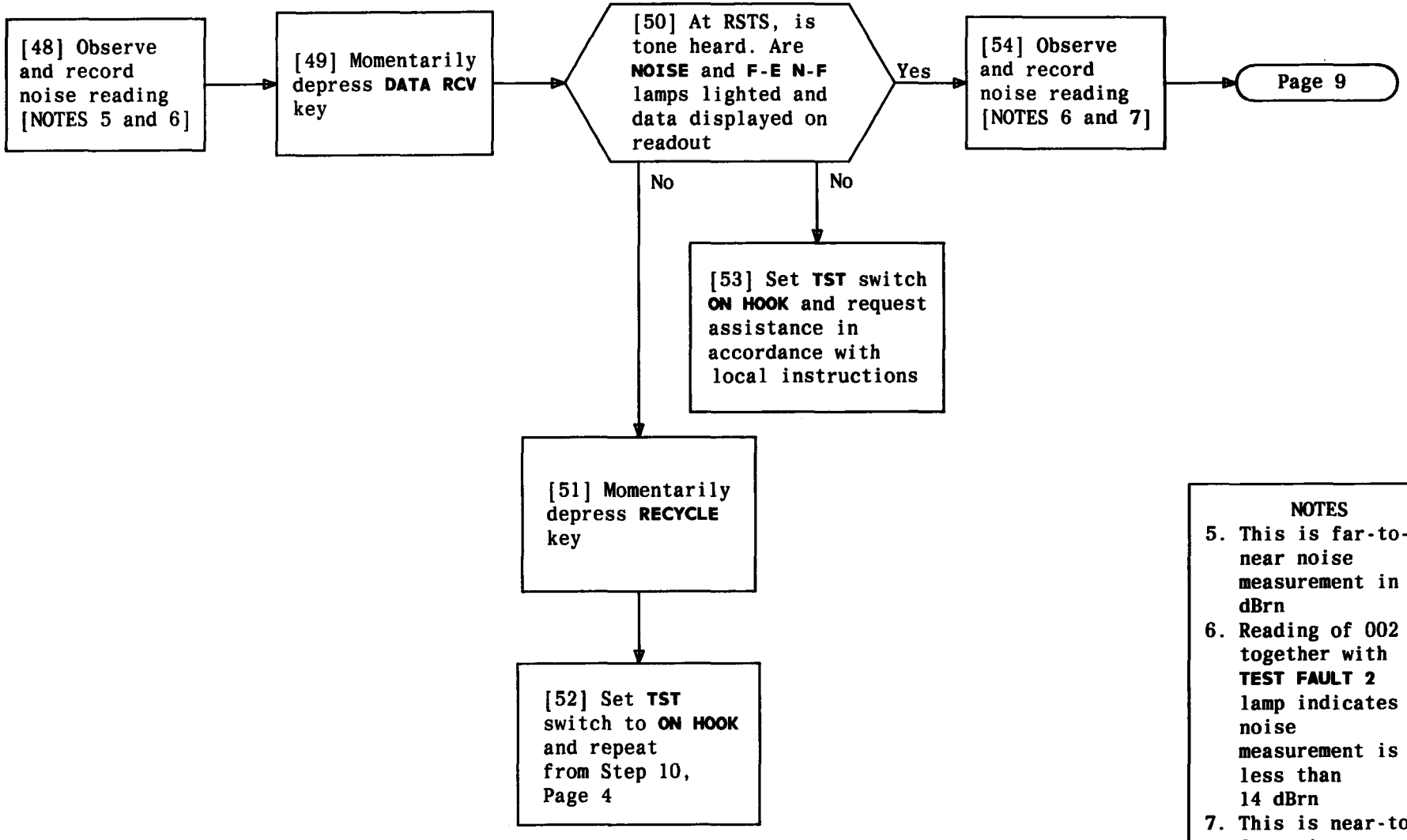

NOTES

5. This is far-to-near noise measurement in dBrn
6. Reading of 002 together with **TEST FAULT 2** lamp indicates noise measurement is less than 14 dBrn
7. This is near-to-far noise measurement in dBrn

TEST ROTL – 105-TYPE TEST LINE AT FAR END USING H-310-150 ROTL SYSTEM TEST SET (RSTS)

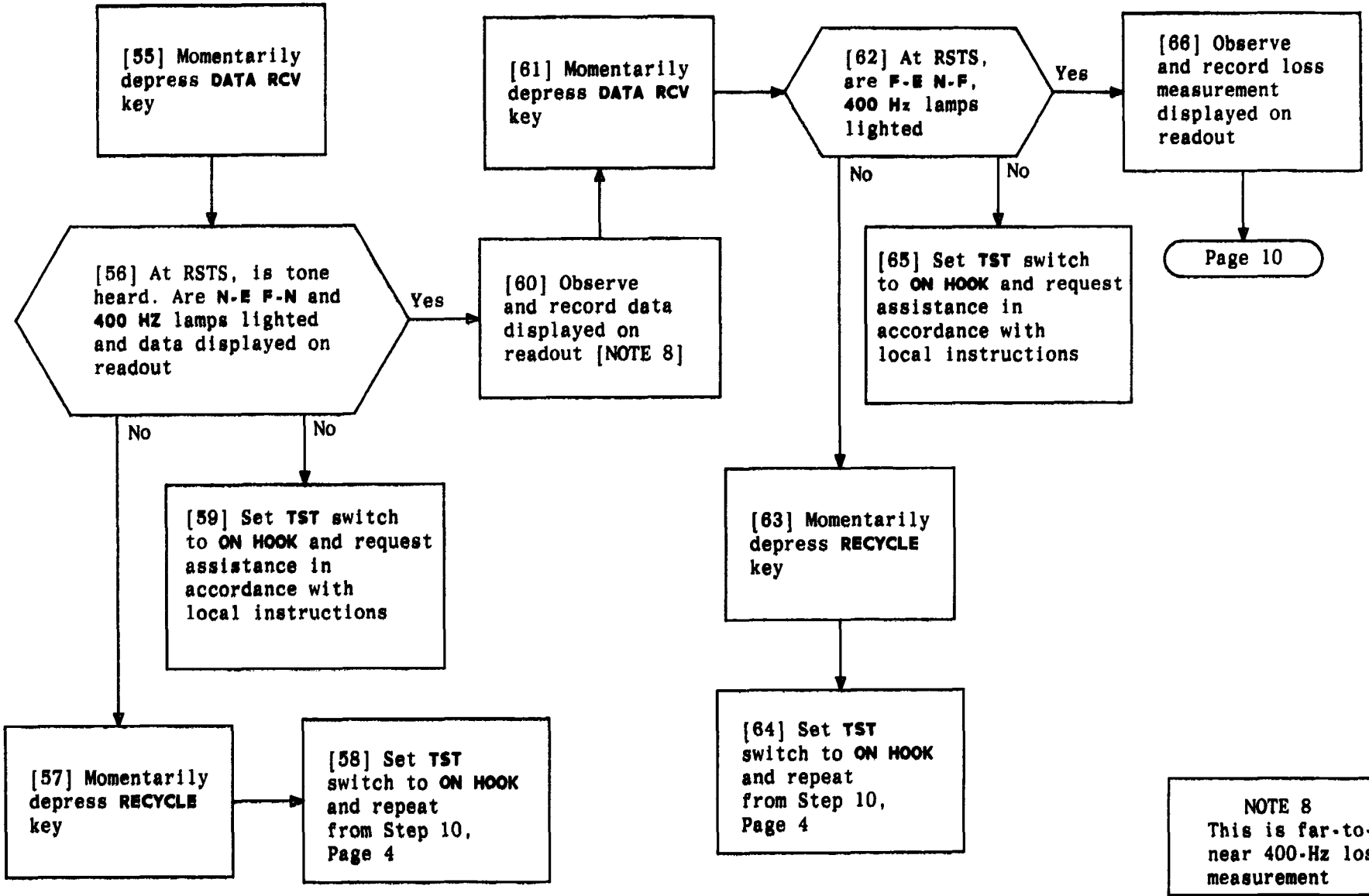

NOTE 8
This is far-to-near 400-Hz loss measurement

TEST ROTL — 105-TYPE TEST LINE AT FAR END USING H-310-150 ROTL SYSTEM TEST SET (RSTS)

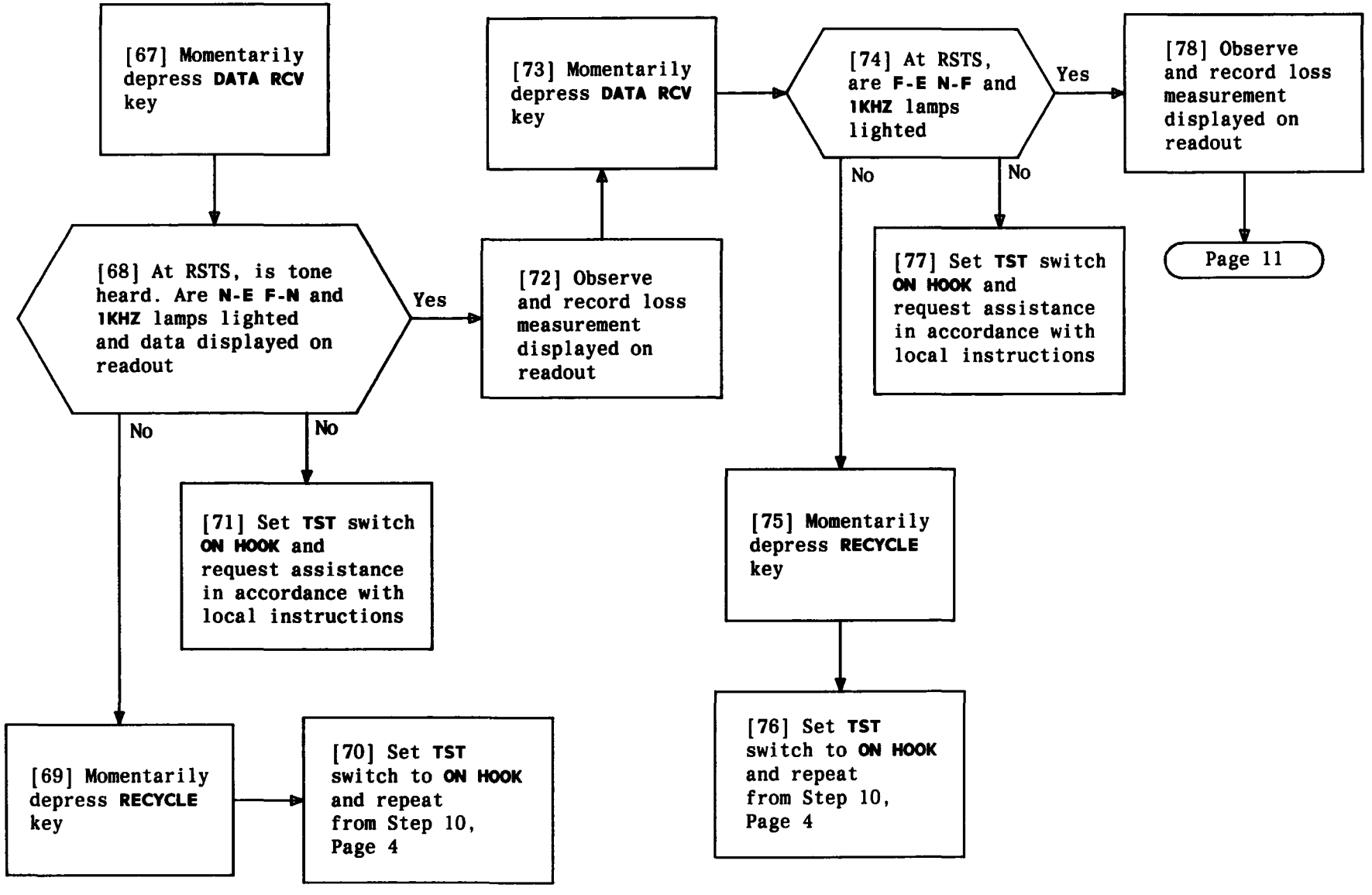

TEST ROTL – 105-TYPE TEST LINE AT FAR END USING H-310-150 ROTL SYSTEM TEST SET (RSTS)

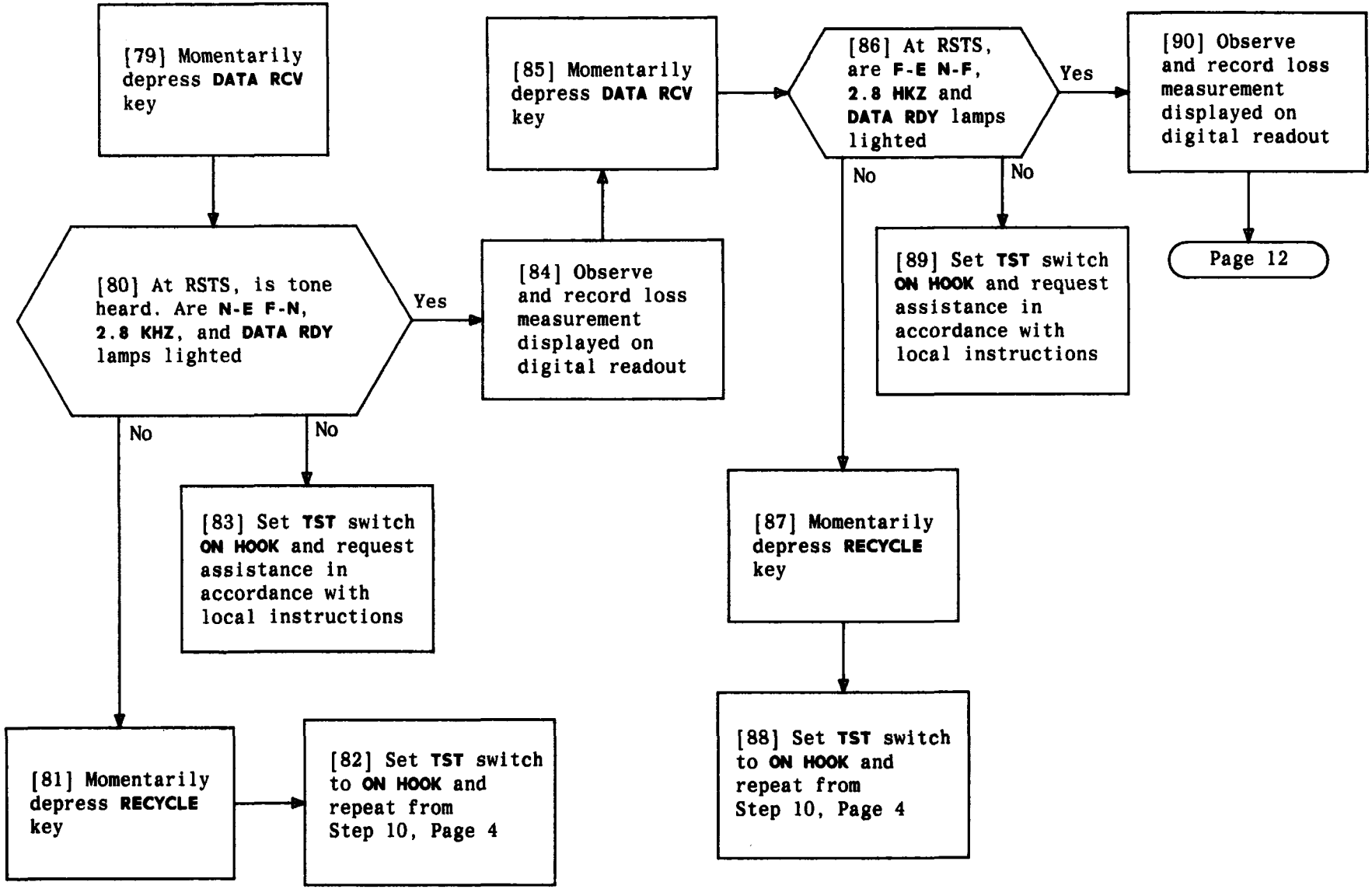

TEST ROTL – 105-TYPE TEST LINE AT FAR END USING H-310-150 ROTL SYSTEM TEST SET (RSTS)

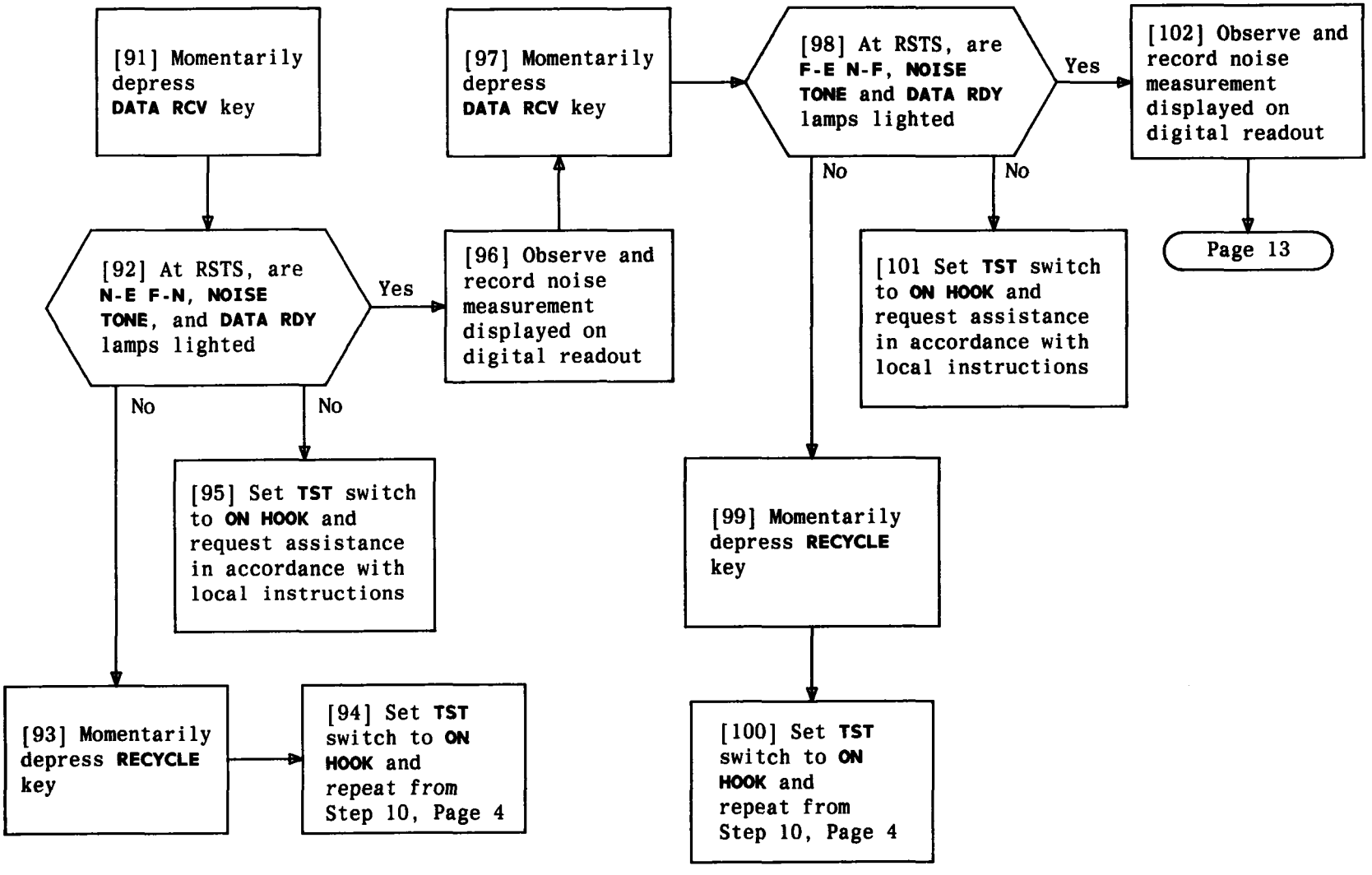

TEST ROTL – 105-TYPE TEST LINE AT FAR END USING H-310-150 ROTL SYSTEM TEST SET (RSTS)

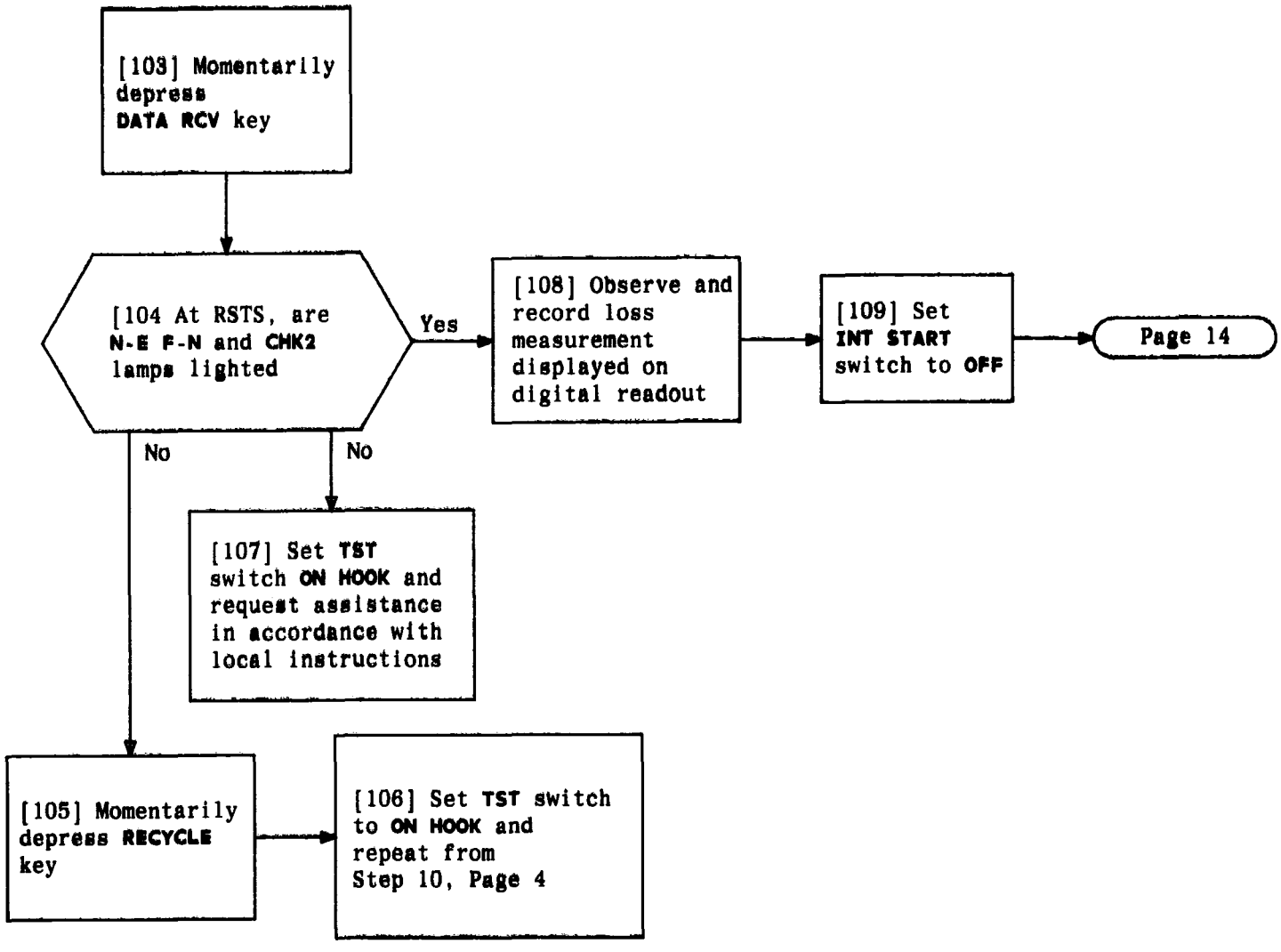

TEST ROTL — 105-TYPE TEST LINE AT FAR END USING H-310-150 ROTL SYSTEM TEST SET (RSTS)

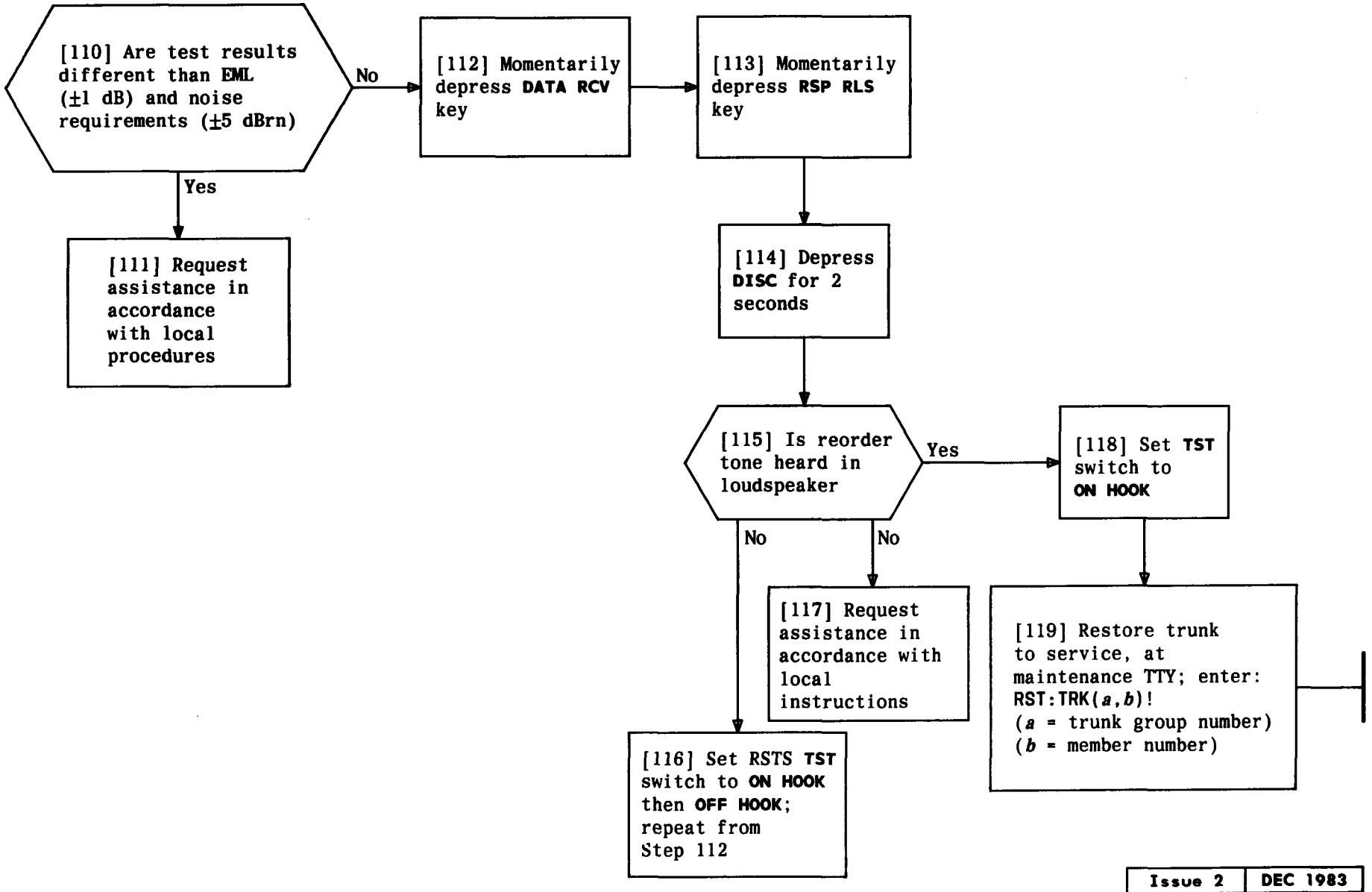

TEST ROTL – 105-TYPE TEST LINE AT FAR END USING H-310-150 ROTL SYSTEM TEST SET (RSTS)

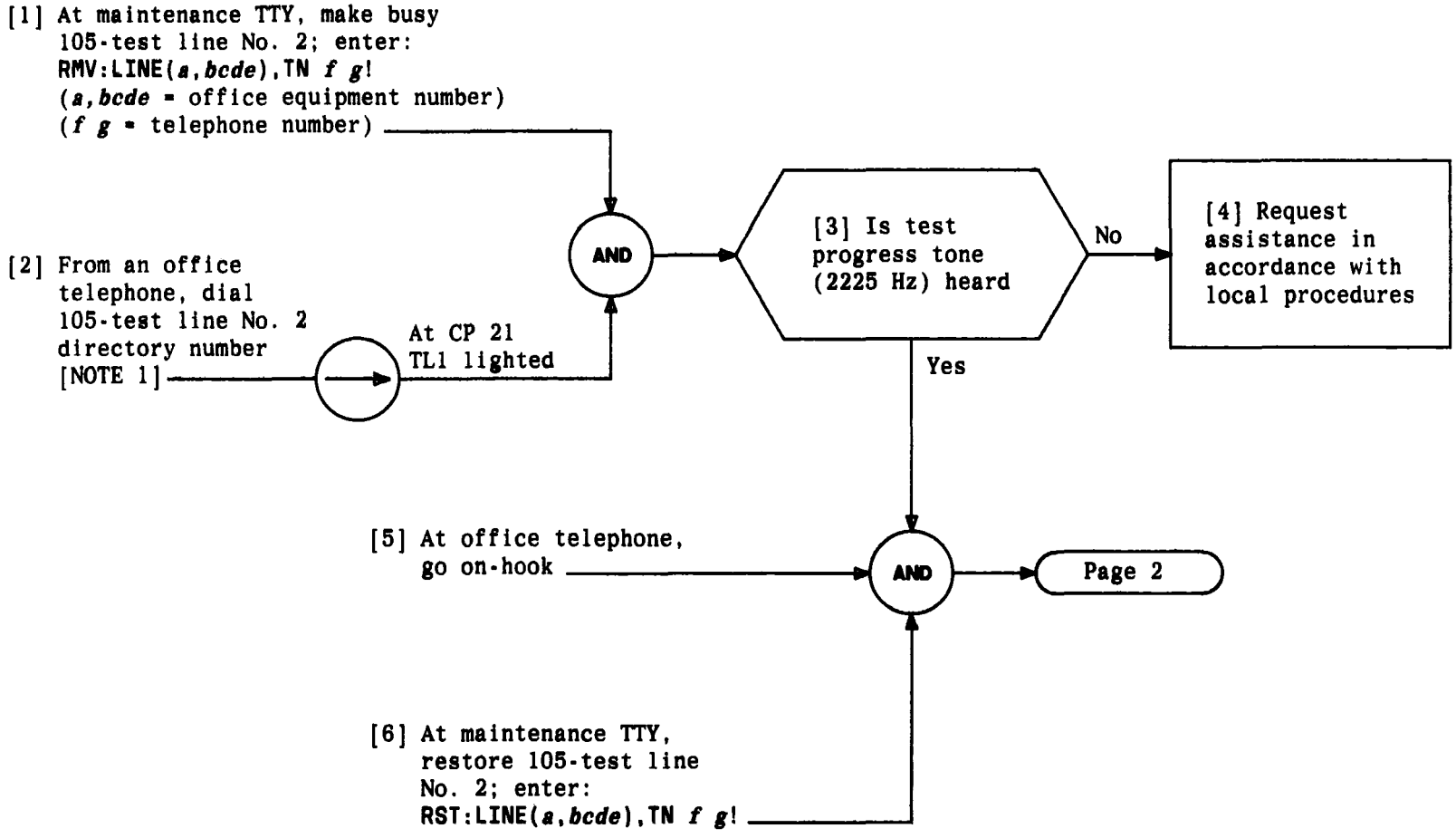

NOTE 1
105-type test lines 1 and 2 are arranged for series completion

Issue 2	DEC 1983
233-142-110	DLP
PAGE 1 of 2	506

TEST 105-TYPE TEST LINE ACCESS

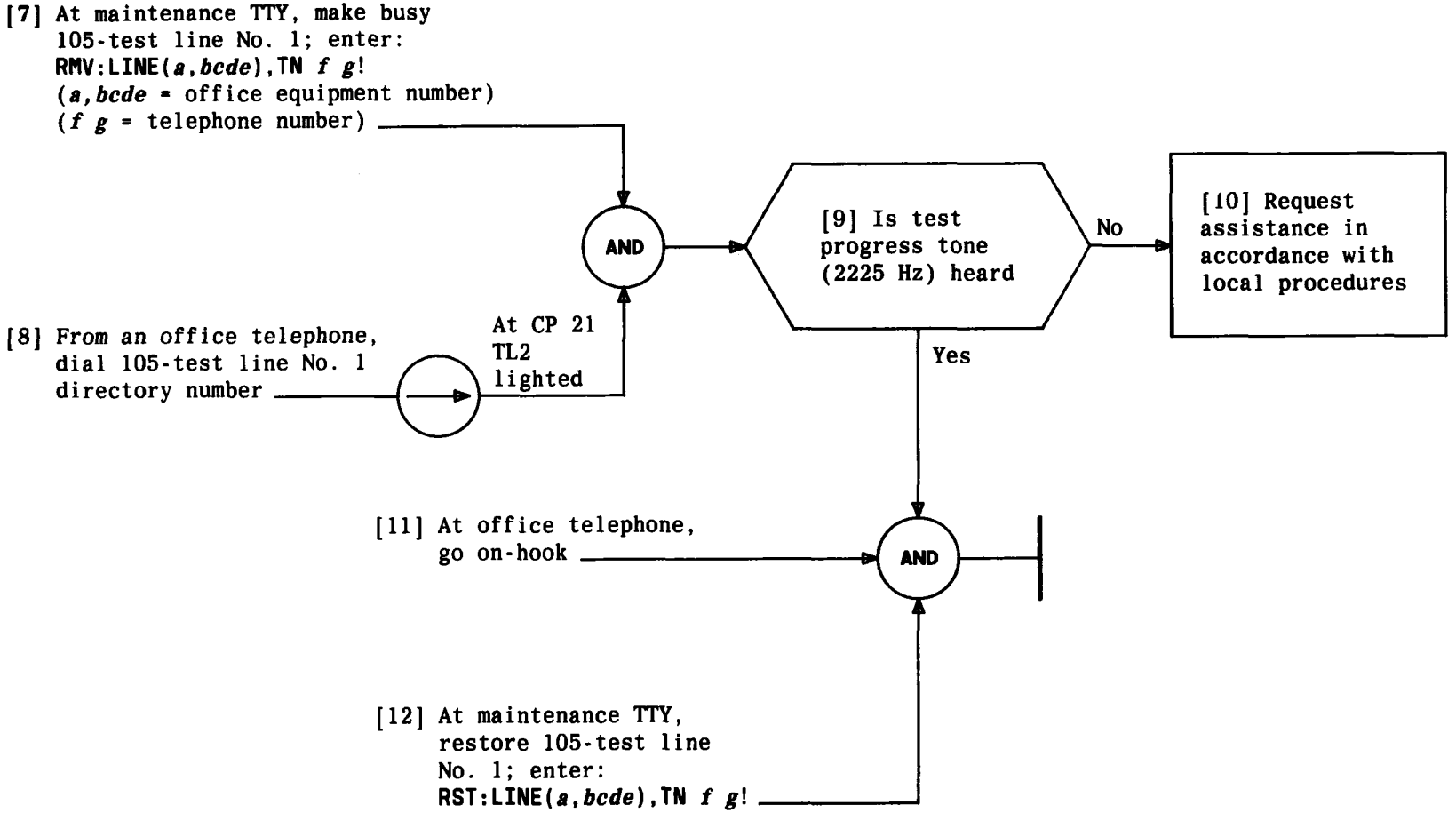

TEST 105-TYPE TEST LINE ACCESS

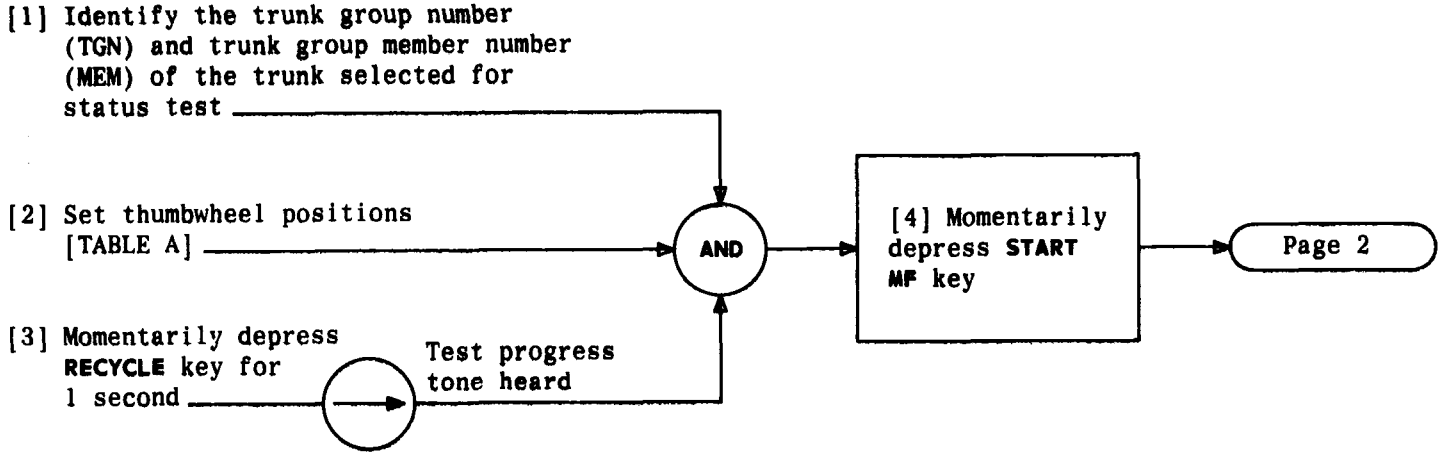

TABLE A

					GROUP NUMBER			MEMBER NUMBER																	
POSITION	KP	1	2	3	4	5	6	7	8	9	10	11	12	13	14	15	16	17	18	19	20	21	22	23	24
SETTING	KP	5	2	0	TGN			MEM			ST	← OFF →													

MAKE TRUNK STATUS REQUEST USING H-310-150 ROTL SYSTEM TEST SET (RSTS)

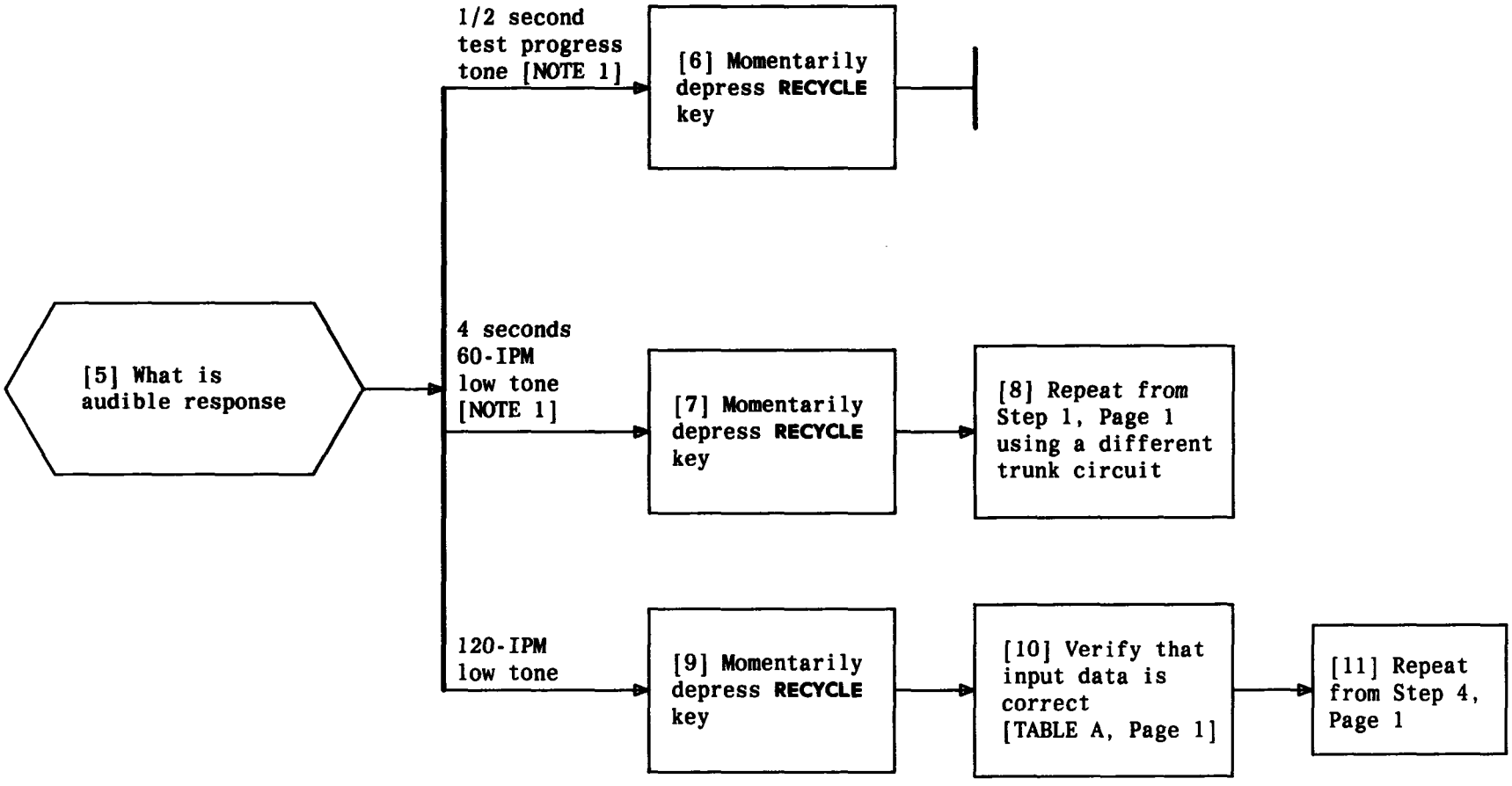

NOTE 1
One-half second test progress tone indicates trunk is idle. Four seconds of 60 IPM indicates trunk is busy

MAKE TRUNK STATUS REQUEST USING H-310-150 ROTL SYSTEM TEST SET (RSTS)

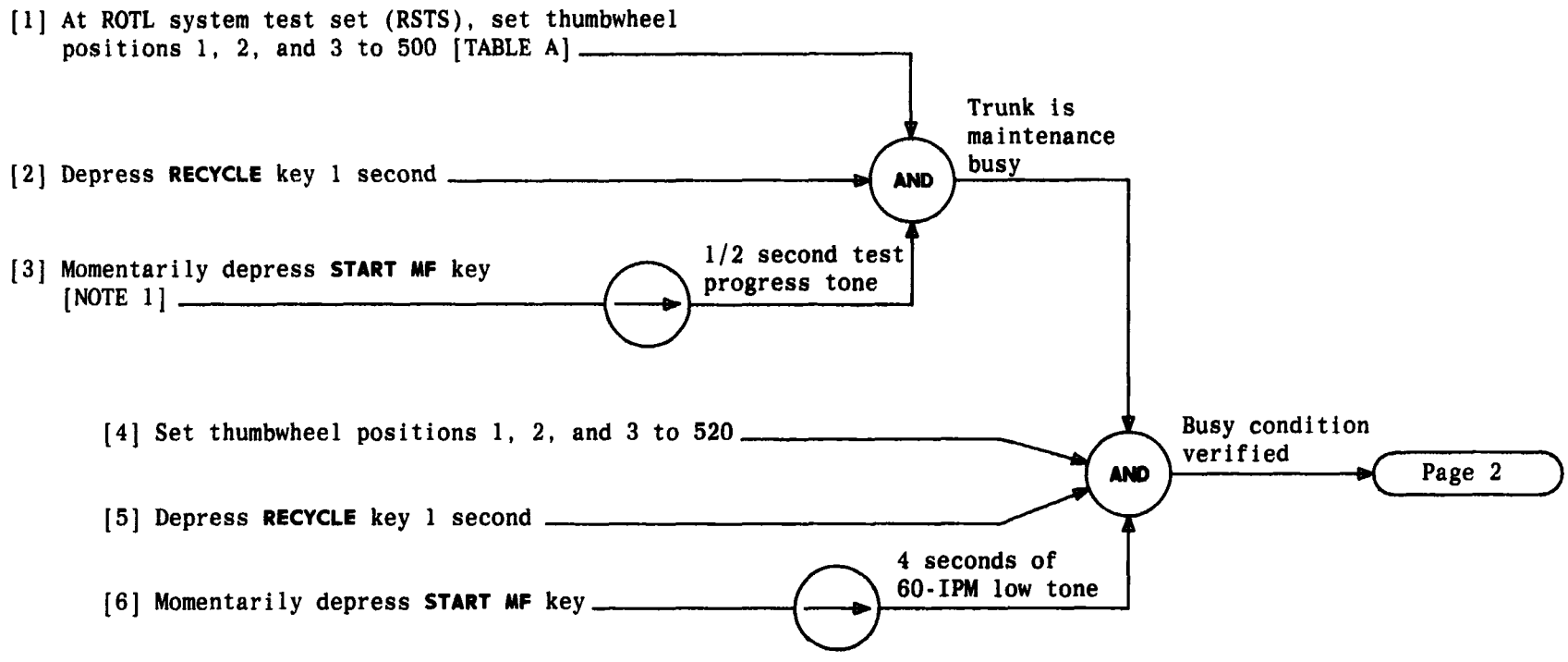

TABLE A

					GROUP NUMBER			MEMBER NUMBER																	
POSITION	KP	1	2	3	4	5	6	7	8	9	10	11	12	13	14	15	16	17	18	19	20	21	22	23	24
SETTING	KP	5	0	0	TGN			MEM			ST	← OFF →													

NOTE 1
After the release of the START MF key, the maintenance TTY will print:
RMV TRK *a b* ROTL LKL

MAKE BUSY AND RESTORE TRUNK CIRCUIT USING H-310-150 ROTL SYSTEM TEST SET (RSTS)

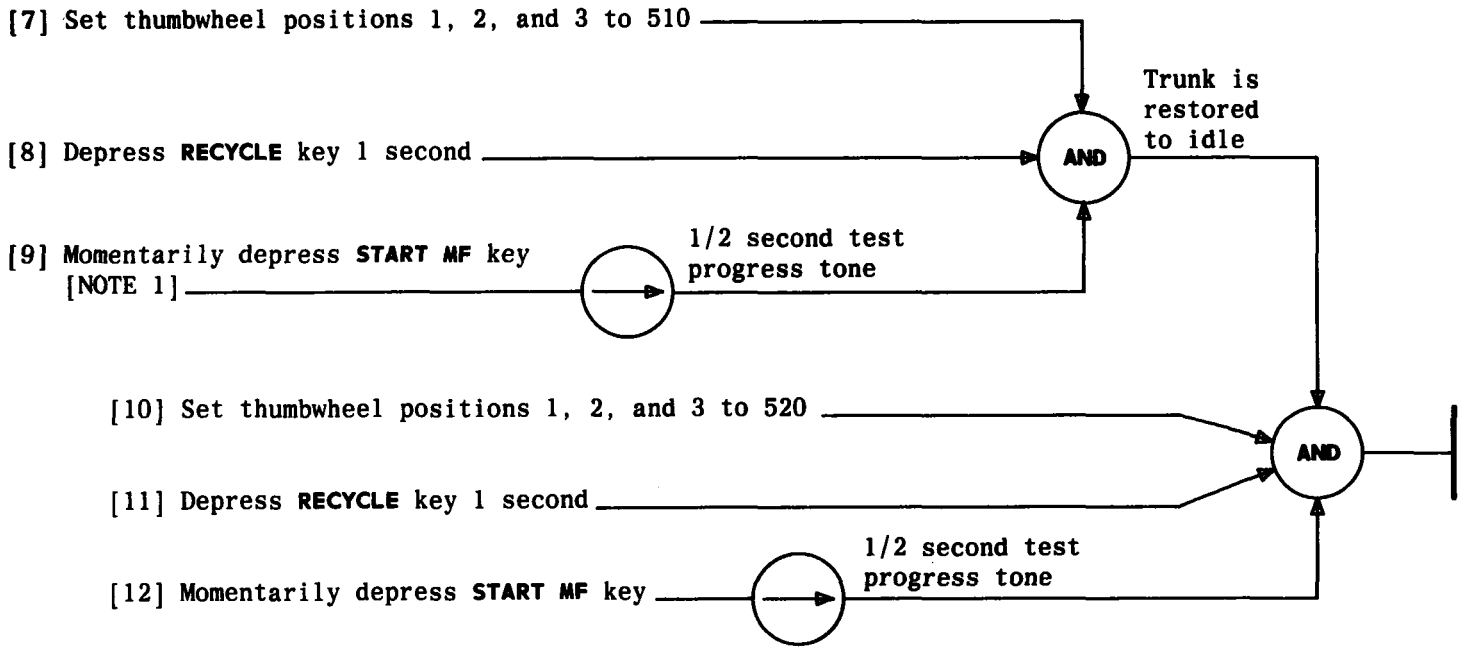

NOTE 1
After the release of the START MF key, the maintenance TTY will print:
RST TRK *a b* ROTL

MAKE BUSY AND RESTORE TRUNK CIRCUIT USING H-310-150 ROTL SYSTEM TEST SET (RSTS)

[1] At RSTS, set RSTS controls according to TABLE A and FIG. 1, Page 2

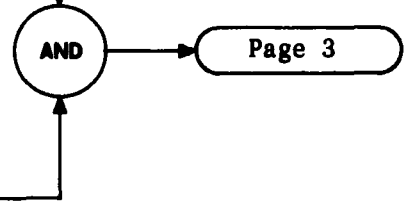

[2] Set **TST** switch to **OFF HOOK**

TABLE A	
CONTROL	POSITION
TEST PREPARATION	**100-0-900**
TEST REQUEST	**MEAS ALL**
SELECT	**EXPANDED**
MFO	**AUTO**
ROS	**DIAL**
TST	**ON HOOK**
DB insertion pads	Normal (Nos. not visable)
INTERROGATOR START	**OFF**
VOL	Full clockwise

ACCESS ROTL PORT USING H-310-150 ROTL SYSTEM TEST SET (RSTS)

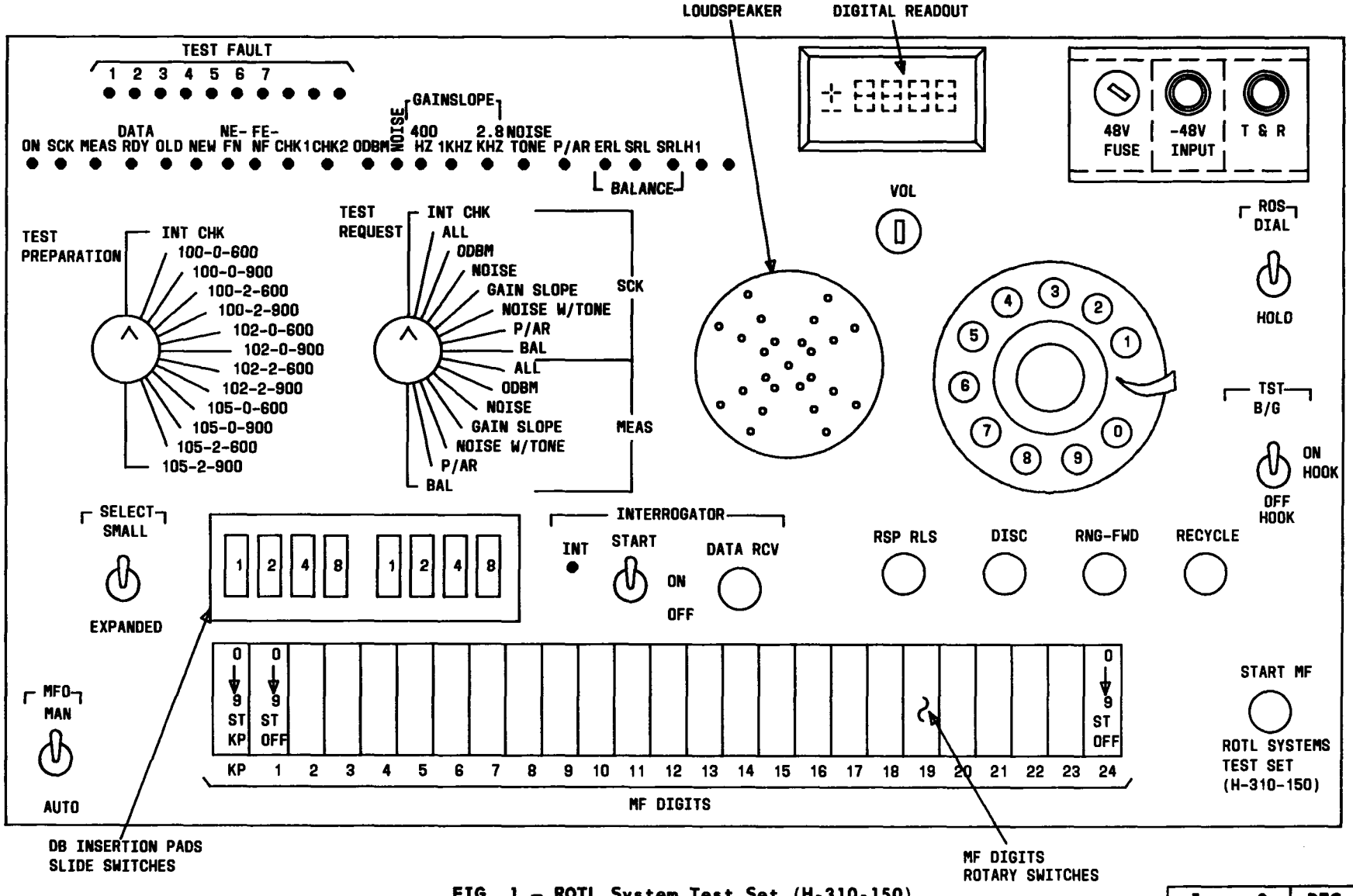

FIG. 1 – ROTL System Test Set (H-310-150)

Issue 2	DEC 1983
233-142-110	DLP
PAGE 2 of 3	509

ACCESS ROTL PORT USING H-310-150 ROTL SYSTEM TEST SET (RSTS)

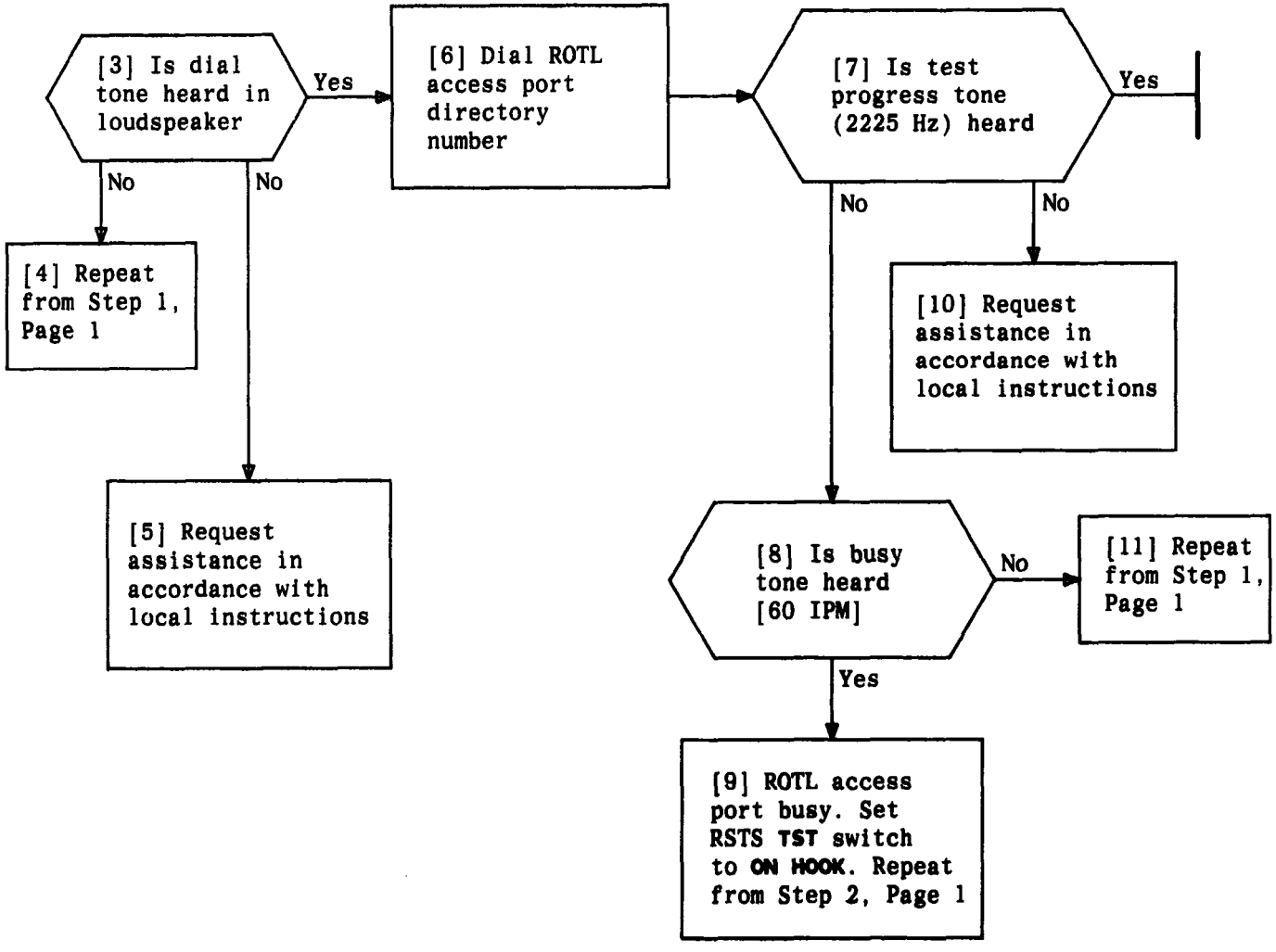

ACCESS ROTL PORT USING H-310-150 ROTL SYSTEM TEST SET (RSTS)

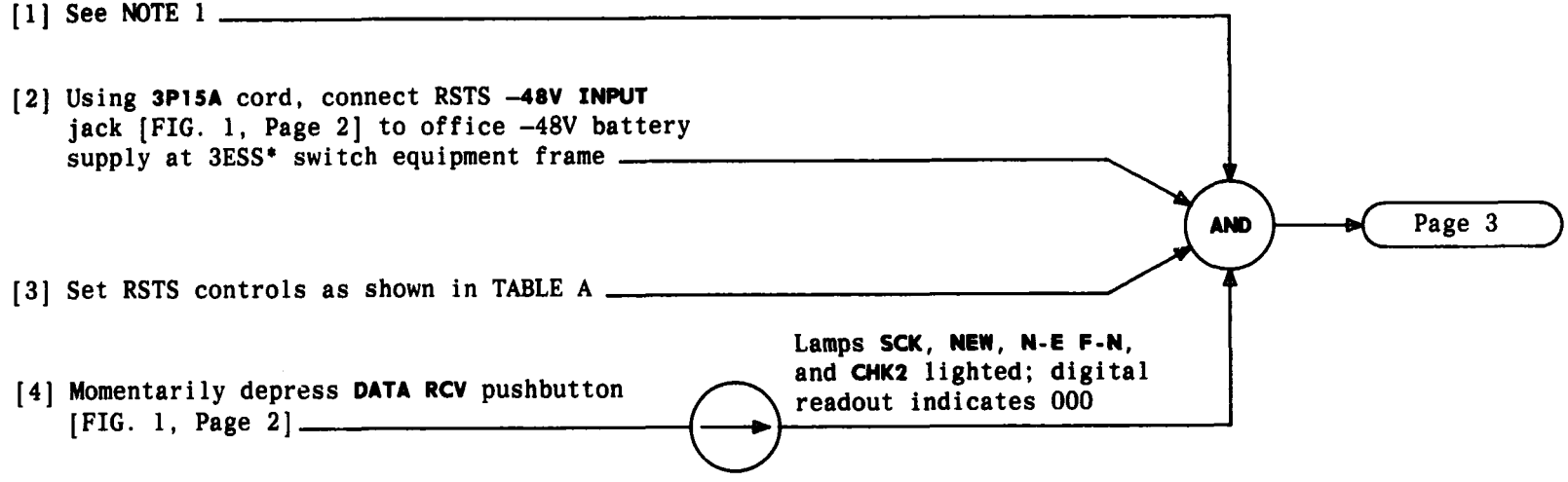

TABLE A	
CONTROL	POSITION
TEST PREPARATION	INT CHK
TEST REQUEST	INT CHK
SELECT	EXPANDED
MFO	MAN
ROS	HOLD
TST	ON HOOK
DB insertion pads	Normal
INTERROGATOR START	OFF
VOL	Full clockwise

NOTE 1
If any one of RSTS self-checks fail, the test set should be returned for repair according to local instructions

* Trademark of Western Electric

PERFORM ROTL SYSTEM TEST SET (RSTS) SELF-CHECK LIST 4 OR HIGHER

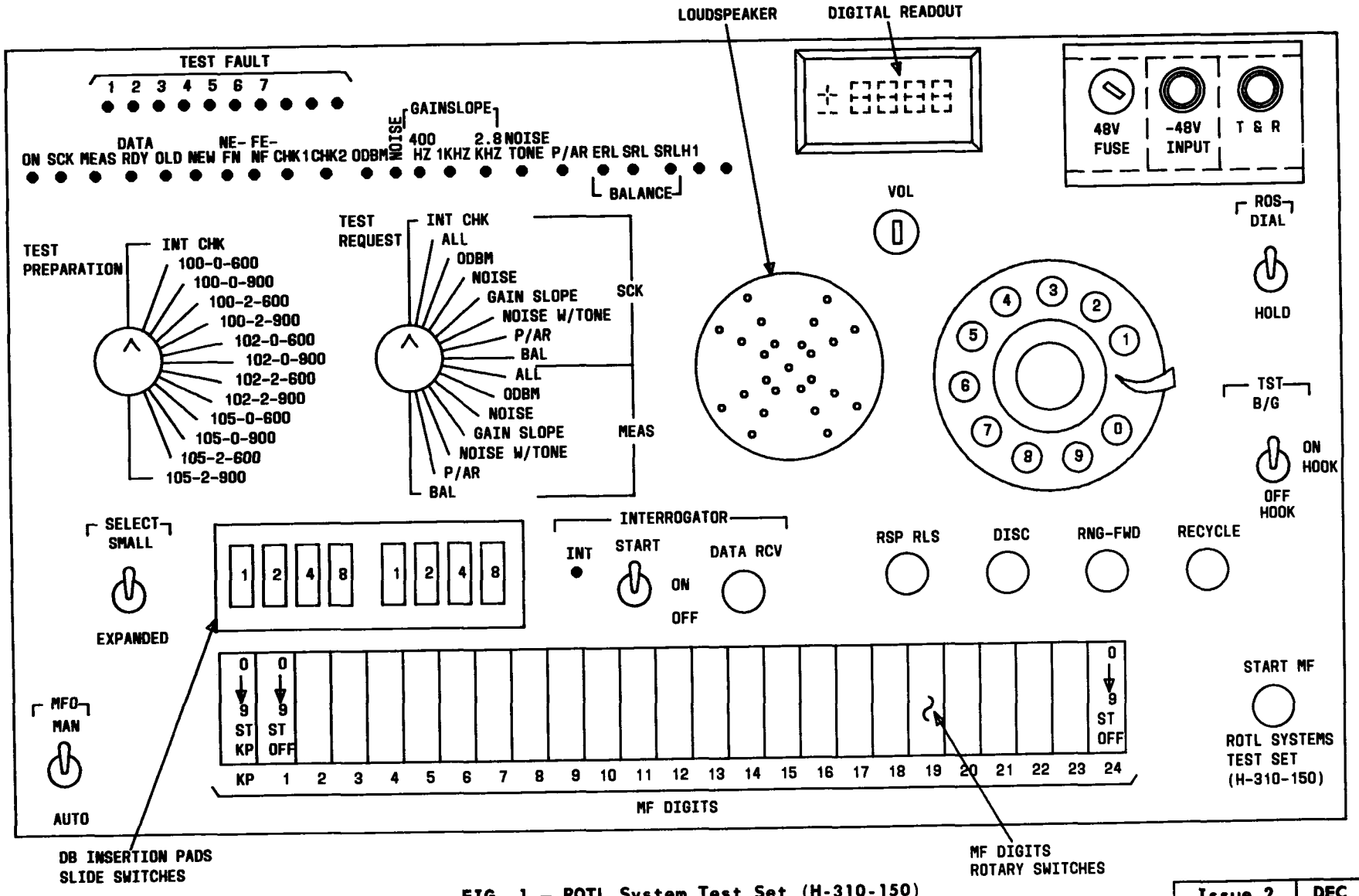

FIG. 1 – ROTL System Test Set (H-310-150)

Issue 2	DEC 1983
233-142-110	DLP
PAGE 2 of 7	510

PERFORM ROTL SYSTEM TEST SET (RSTS) SELF-CHECK LIST 4 OR HIGHER

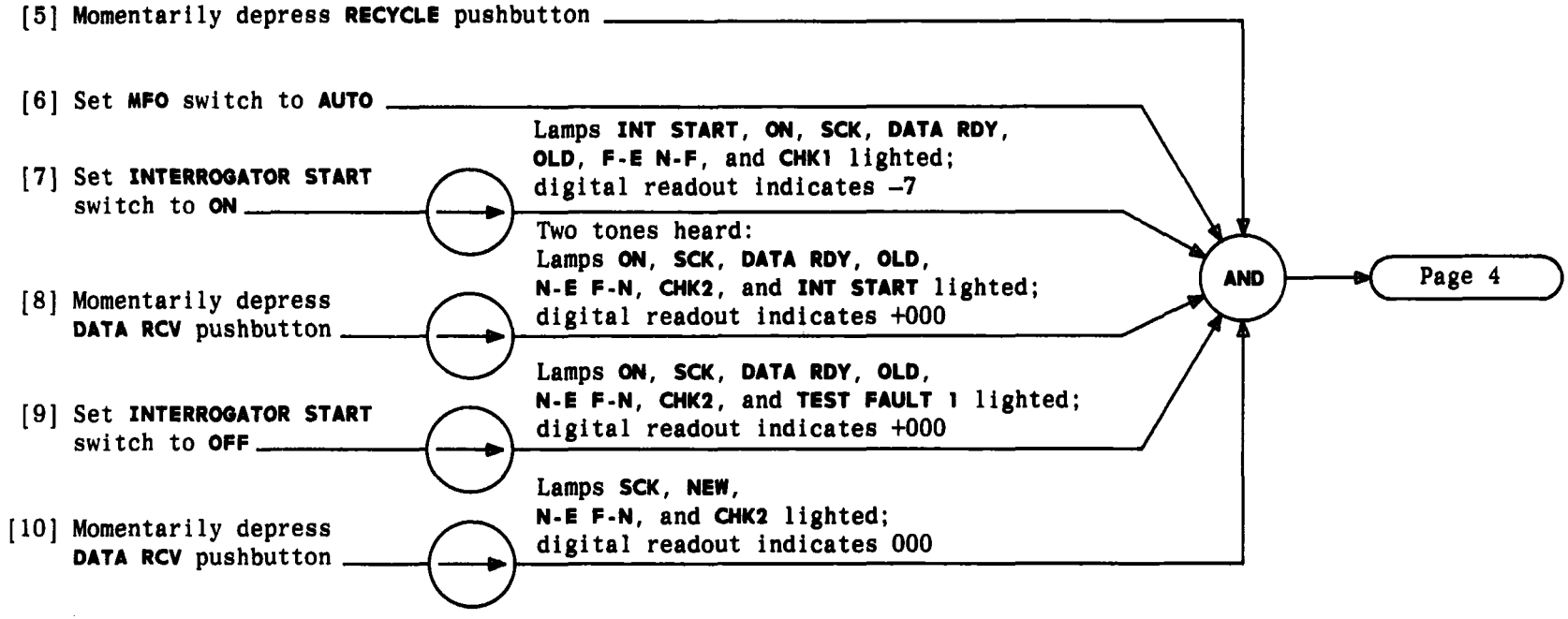

PERFORM ROTL SYSTEM TEST SET (RSTS) SELF-CHECK LIST 4 OR HIGHER

[11] At **MF DIGITS** rotary switch, set thumbwheel positions to settings in TABLE B

[12] Set **MFO** switch to **MAN**

[13] Momentarily depress **START MF** pushbutton once → MF tones heard

[14] Momentarily depress **START MF** pushbutton 22 times → MF tones heard each time

[15] Momentarily depress **START MF** pushbutton once → No MF tones heard

[16] Momentarily depress **START MF** pushbutton once → MF tones heard

[17] Momentarily depress **START MF** pushbutton once → No MF tones heard

AND → Page 5

TABLE B

THUMBWHEEL																								
POSITION	KP	1	2	3	4	5	6	7	8	9	10	11	12	13	14	15	16	17	18	19	20	21	22	23	24
SETTING	KP	1	1	2	2	3	3	4	4	5	5	6	6	7	7	8	8	9	9	0	0	1	1	OFF	ST

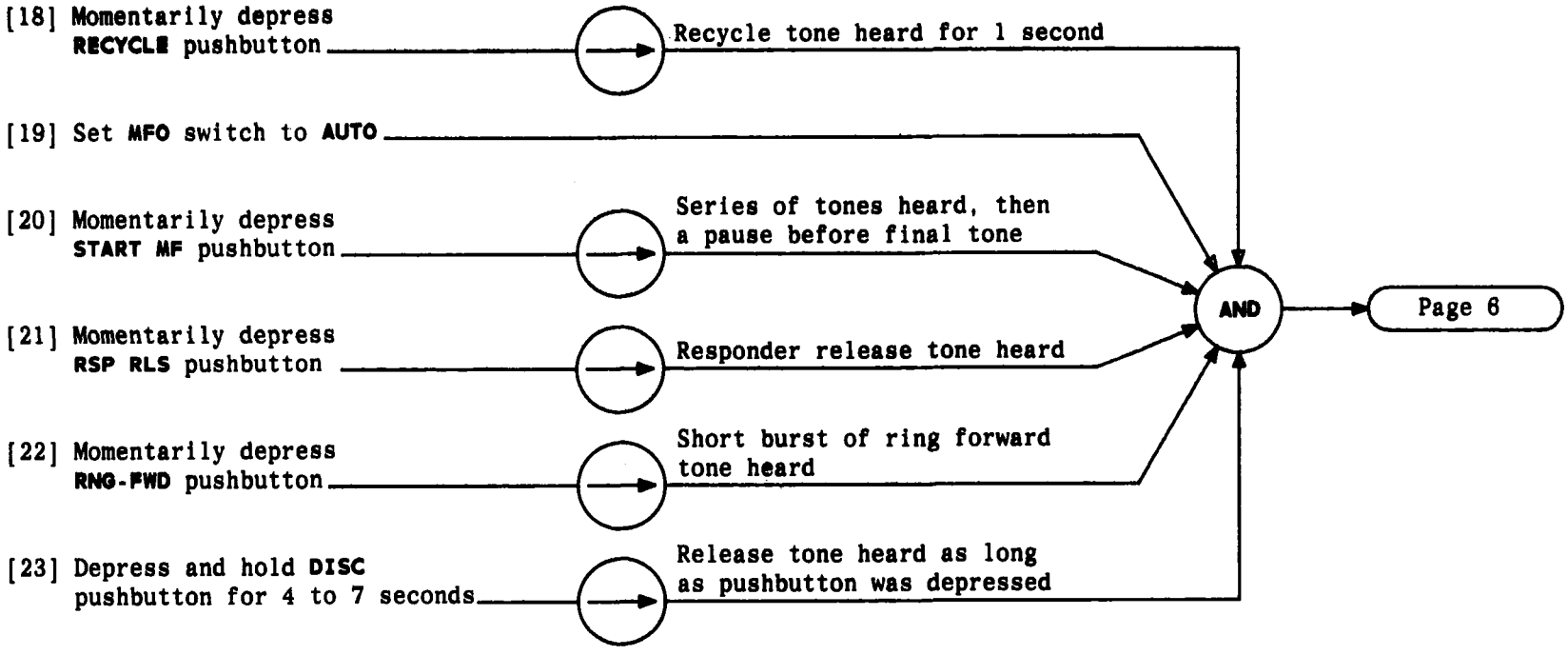
[18] Momentarily depress RECYCLE pushbutton
Recycle tone heard for 1 second
[19] Set MFO switch to AUTO
[20] Momentarily depress START MF pushbutton
Series of tones heard, then a pause before final tone
[21] Momentarily depress RSP RLS pushbutton
Responder release tone heard
[22] Momentarily depress RNG-FWD pushbutton
Short burst of ring forward tone heard
[23] Depress and hold DISC pushbutton for 4 to 7 seconds
Release tone heard as long as pushbutton was depressed
AND
Page 6

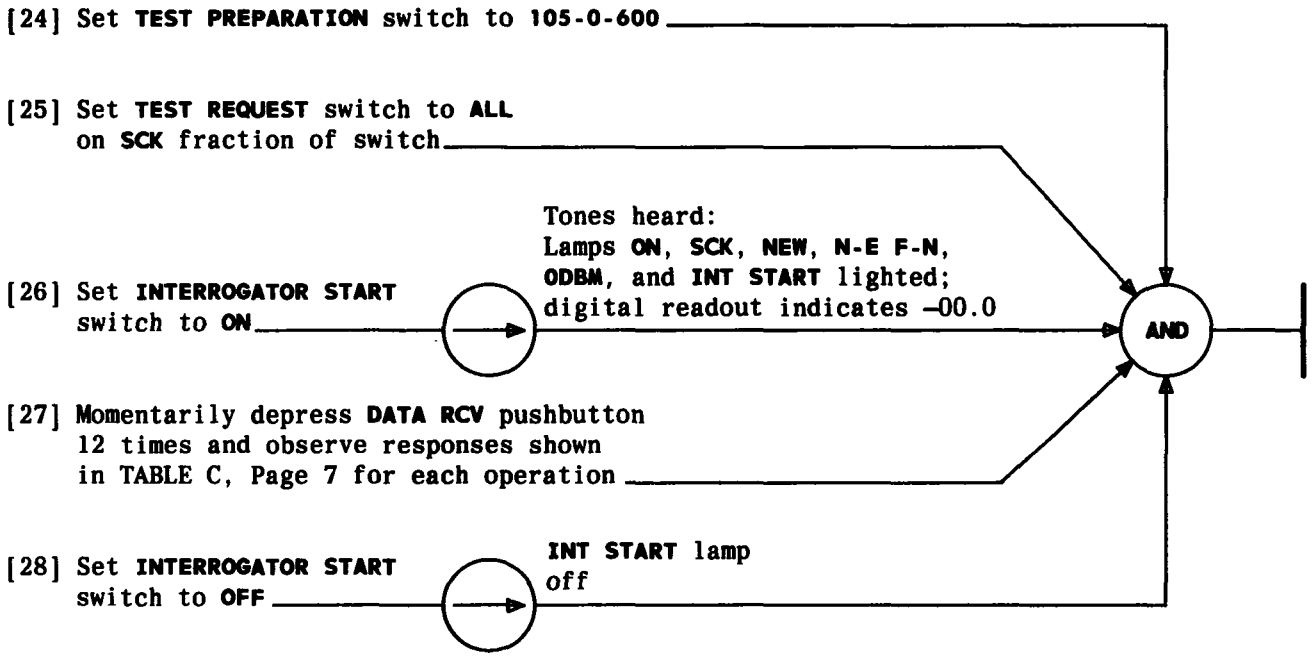
[24] Set TEST PREPARATION switch to 105-0-600
[25] Set TEST REQUEST switch to ALL on SCK fraction of switch
Tones heard: Lamps ON, SCK, NEW, N-E F-N, ODBM, and INT START lighted; digital readout indicates –00.0
[26] Set INTERROGATOR START switch to ON
AND
[27] Momentarily depress DATA RCV pushbutton 12 times and observe responses shown in TABLE C, Page 7 for each operation
INT START lamp off
[28] Set INTERROGATOR START switch to OFF

TABLE C					
OPERATION	RESPONSES		OPERATION	RESPONSES	
	LAMPS LIGHTED	DIGITAL READOUT DISPLAY		LAMPS LIGHTED	DIGITAL READOUT DISPLAY
1	ON, SCK, NEW, F-E N-F, 0DBM, INT START	–00.0	7	ON, SCK, NEW, F-E N-F, 1KHZ, INT START	–00.0
2	ON, SCK, NEW, N-E F-N, NOISE, INT START	–000	8	ON, SCK, NEW, N-E F-N, 2.8 KHZ, INT START	–00.0
3	ON, SCK, NEW, F-E N-F, NOISE, INT START	–000	9	ON, SCK, NEW, F-E N-F, 2.8 KHZ, INT START	–00.0
4	ON, SCK, NEW, N-E F-N, 400 HZ, INT START	–00.0	10	ON, SCK, NEW, N-E F-N, NOISE, TONE, INT START	–000
5	ON, SCK, NEW, F-E N-F, 400 HZ, INT START	–00.0	11	ON, SCK, NEW, F-E N-F, NOISE, TONE, INT START	–000
6	ON, SCK, NEW, N-E F-N, 1KHZ, INT START	–00.0	12	SCK, NEW, N-E F-N, CHK2, INT START	000

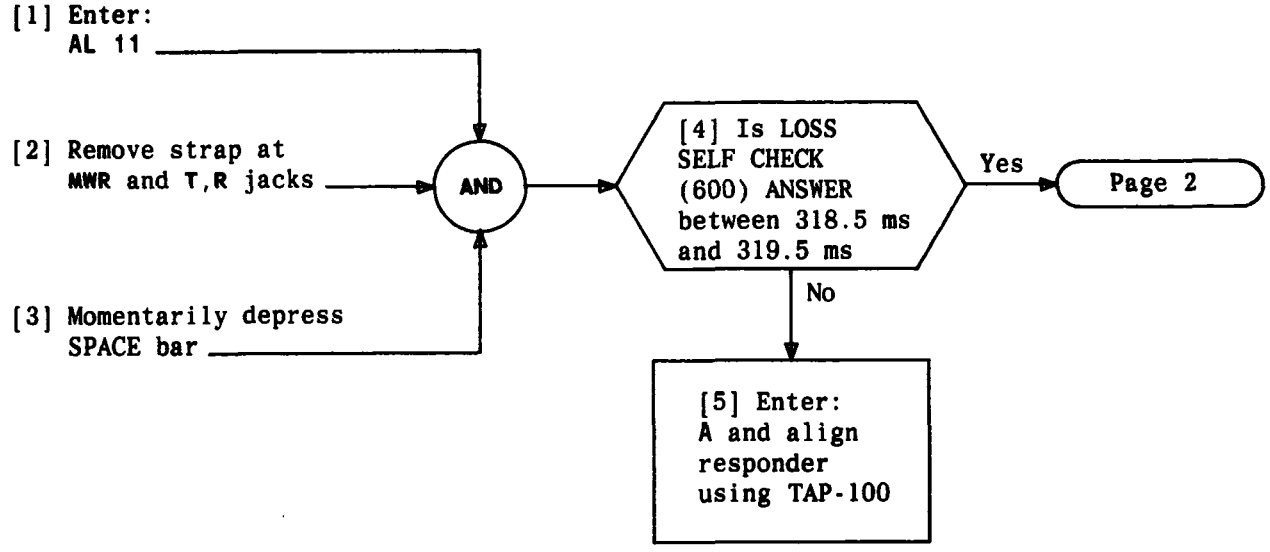

CHECK RESPONDER ALIGNMENT

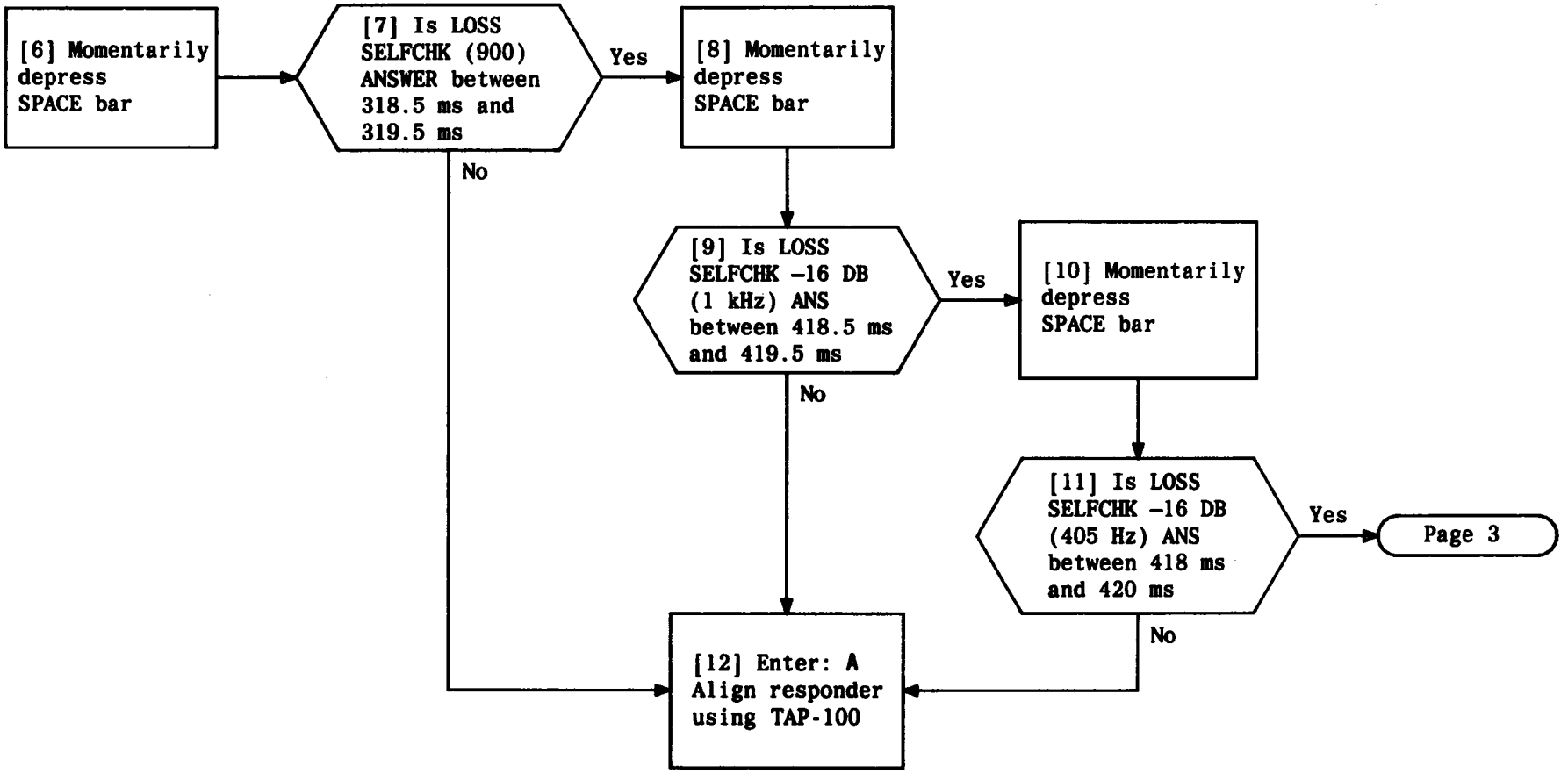

CHECK RESPONDER ALIGNMENT

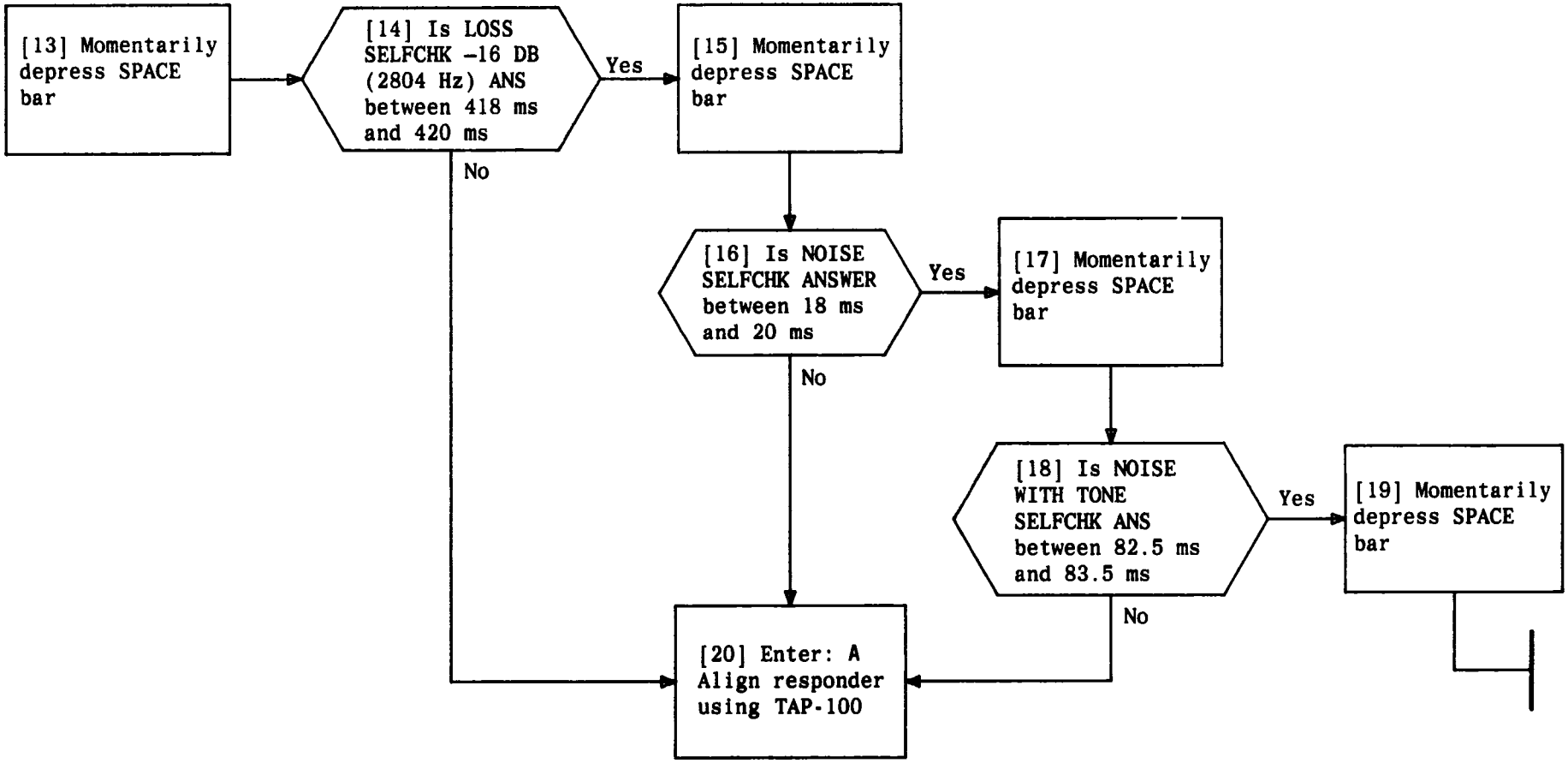

CHECK RESPONDER ALIGNMENT

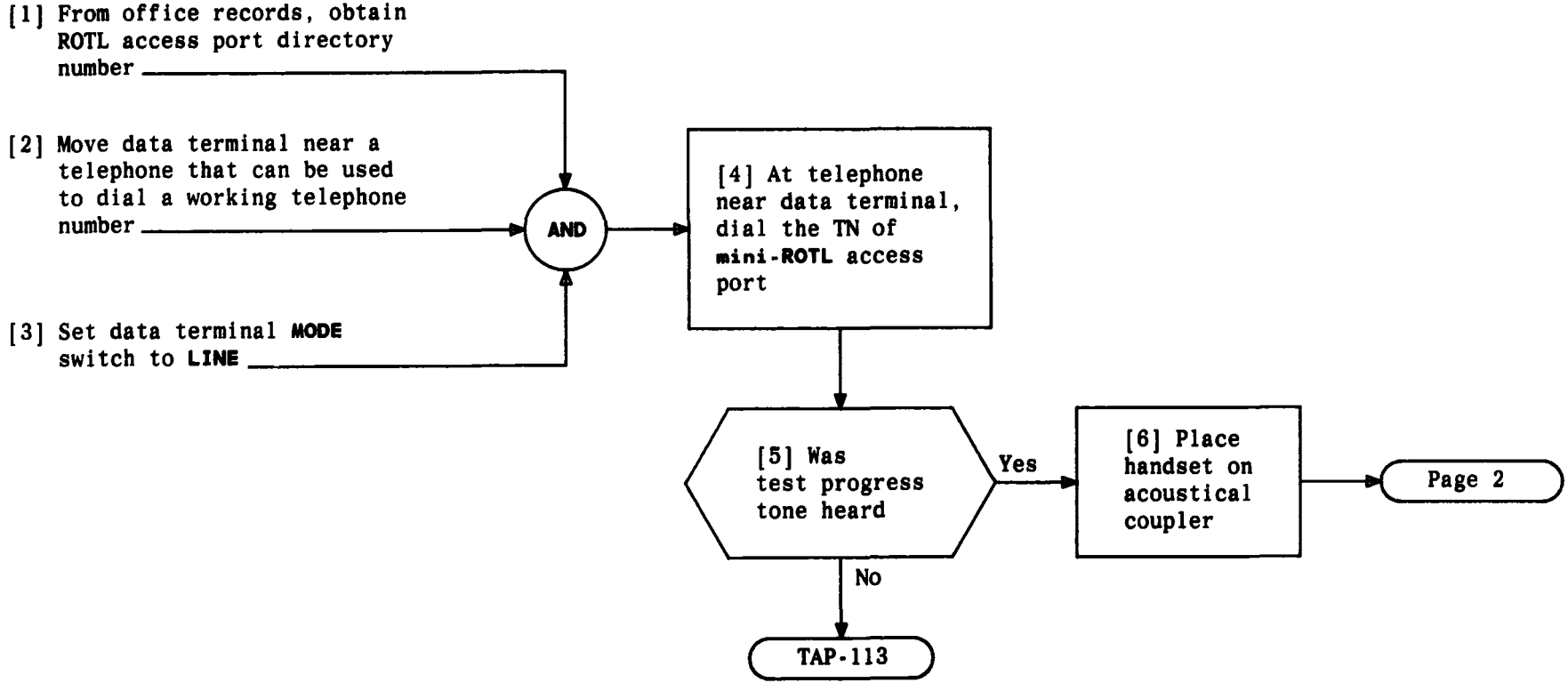

CHECK DIALUP CONNECTION

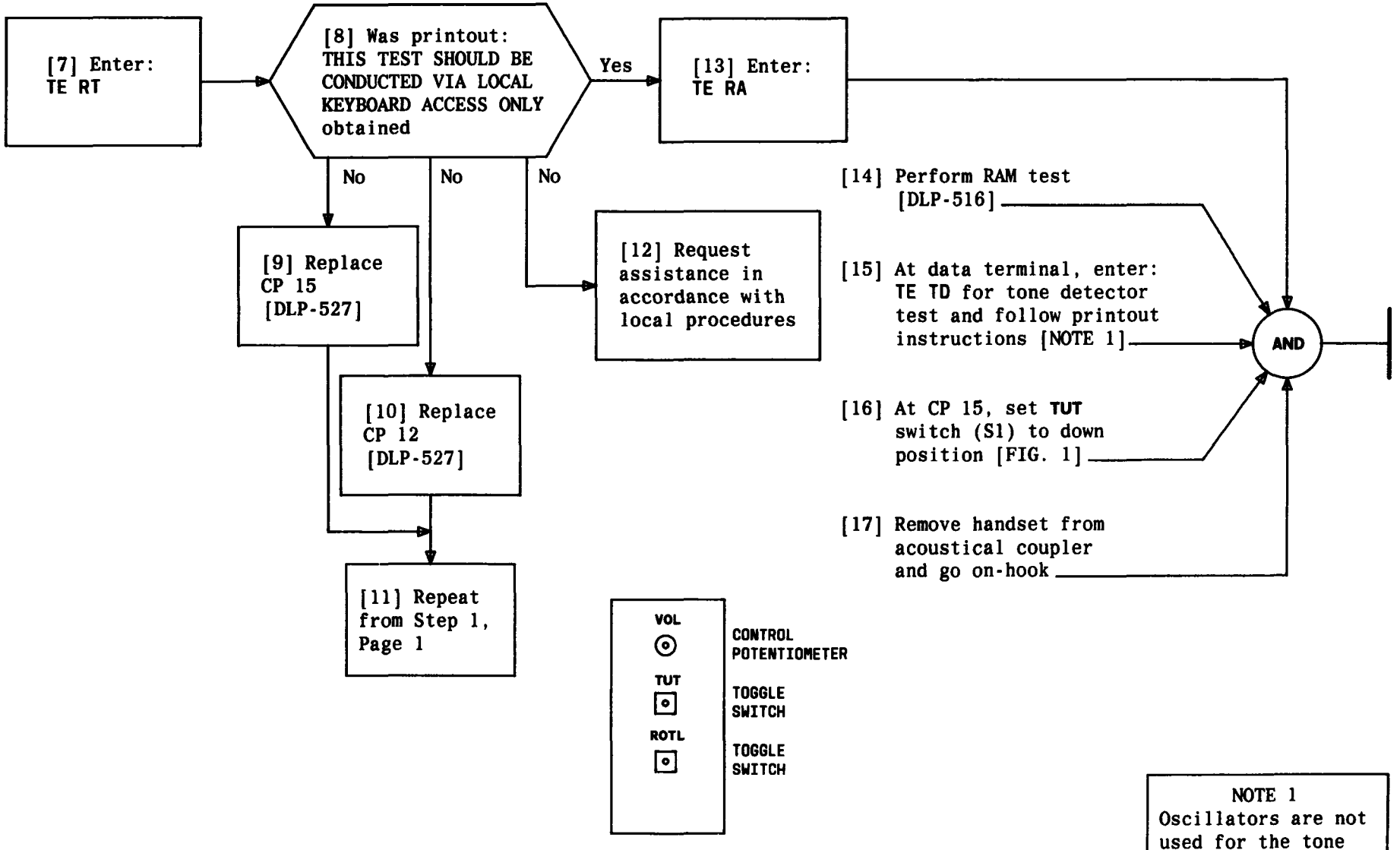

FIG. 1

NOTE 1
Oscillators are not used for the tone detector test

Issue 2	DEC 1983
233-142-110	DLP
PAGE 2 of 2	512

CHECK DIALUP CONNECTION

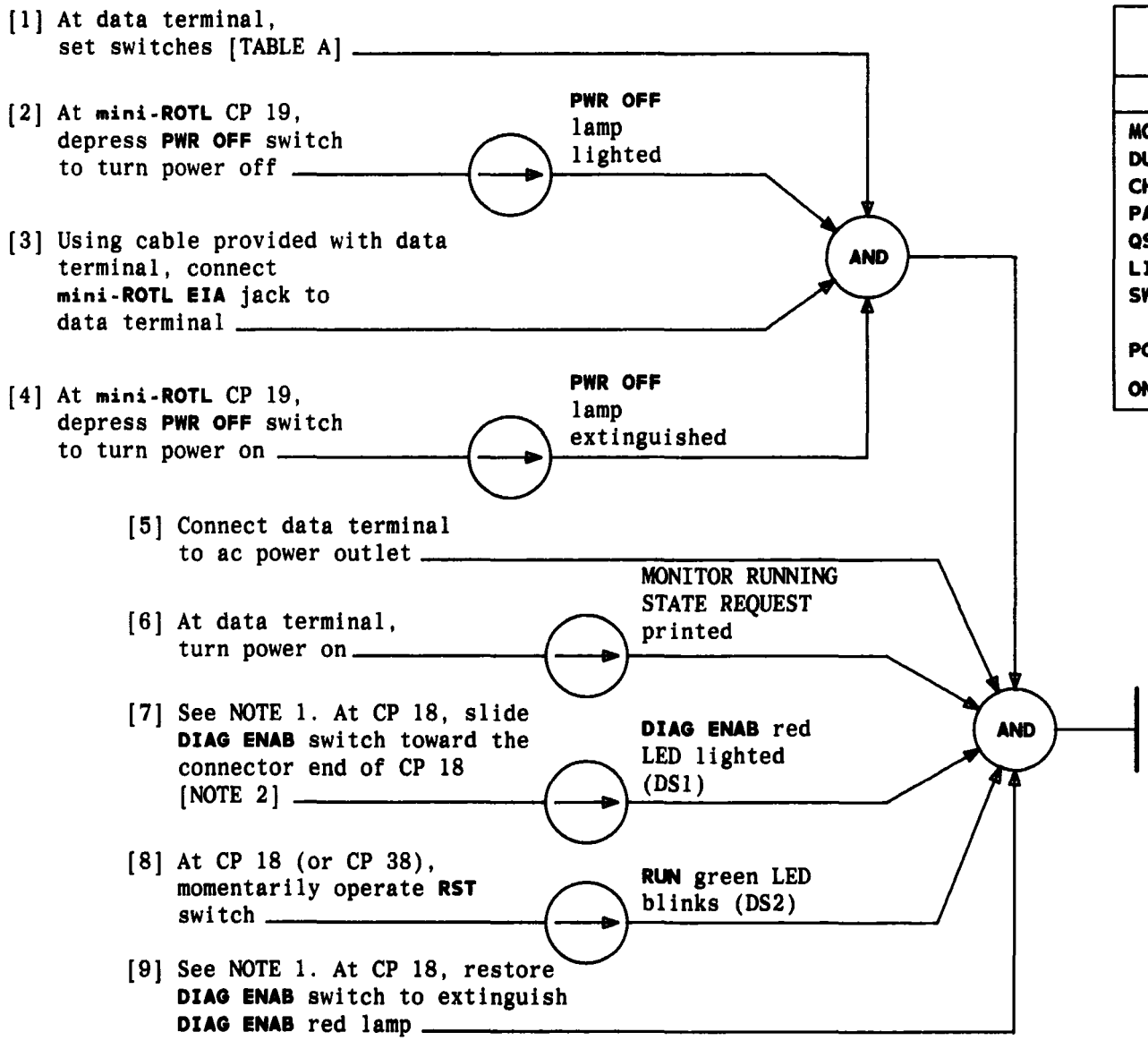

TABLE A
EXECUPORT SWITCH SETTINGS

SWITCH	POSITION
MODE	ISOLATE
DUPLEX	FULL
CHAR/SEC	10
PARITY	Either ODD or EVEN
QSL	UPPER
LINE SPACING SWITCH	Back (2-position slide switch mounted on right side of paper roll)
POWER	OFF (on back)
ON LINE	ON LINE

NOTES

1. This step should be omitted if the mini-ROTL is equipped with CP 38 instead of CP 18
2. DIAG ENAB is a slide switch located approximately 1 inch above the rear of the RST switch on CP 18

SET UP DATA TERMINAL

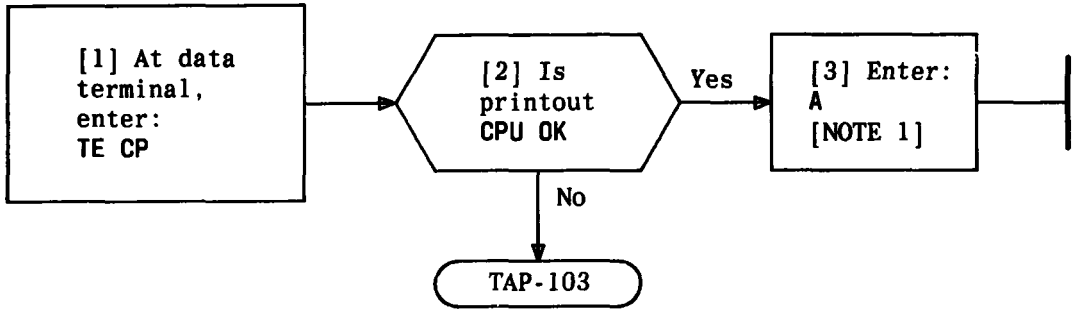

NOTE 1
When A is typed, MONITOR RUNNING STATE REQUEST is printed

PERFORM CPU DIAGNOSTIC TEST – TE CP

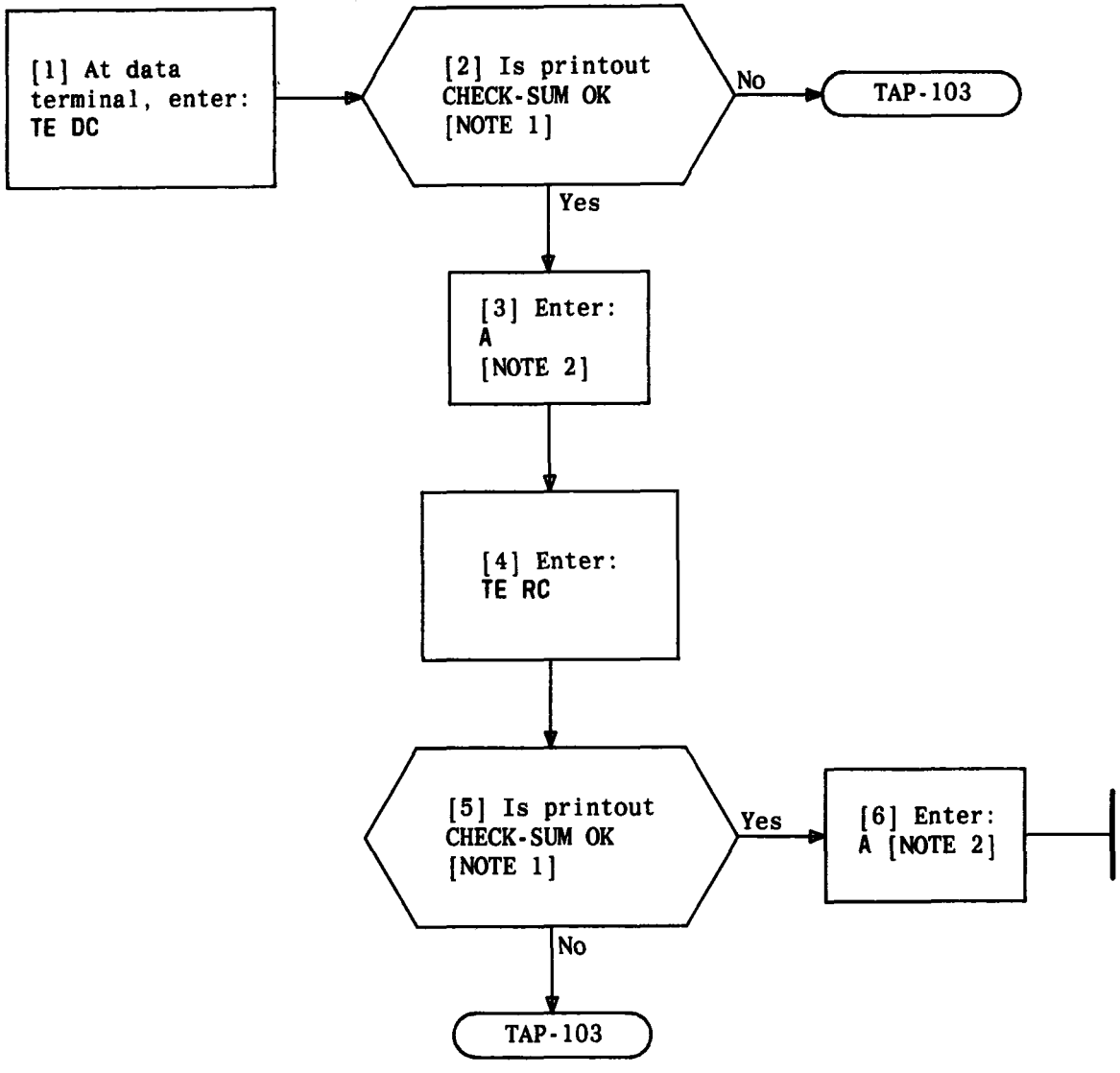

PERFORM DIAGNOSTIC AND RUNNING CHECKSUM DIAGNOSTIC TEST – TE DC AND TE RC

NOTES

1. Printout maybe delayed 20 or 30 seconds
2. After A is typed, MONITOR RUNNING STATE REQUEST is printed

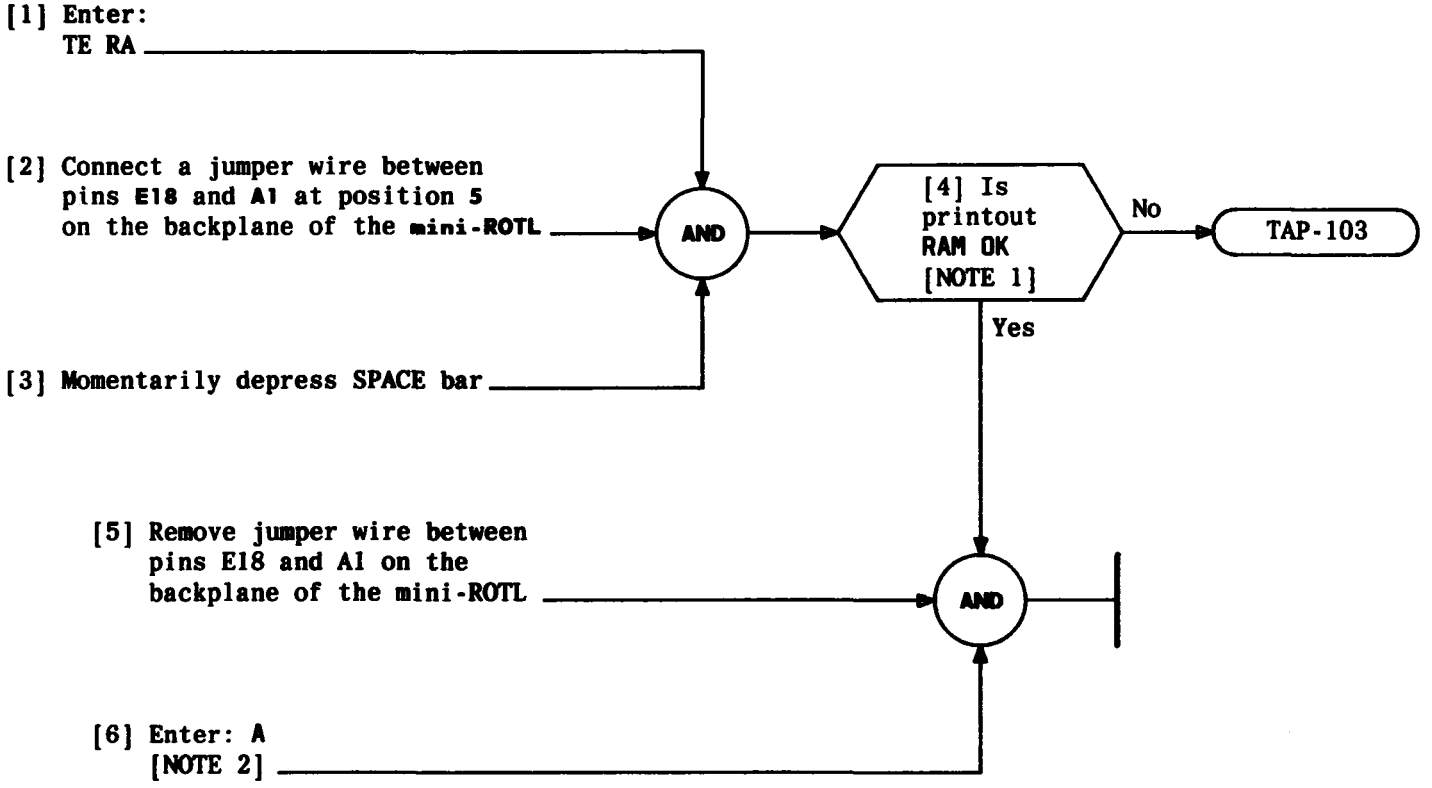

NOTES
1. Printout may be delayed 20 or 30 seconds
2. After A is entered, MONITOR RUNNING STATE REQUEST is printed

Issue 2	DEC 1983
233-142-110	DLP
PAGE 1 of 1	516

PERFORM RAM DIAGNOSTIC TEST – TE RA

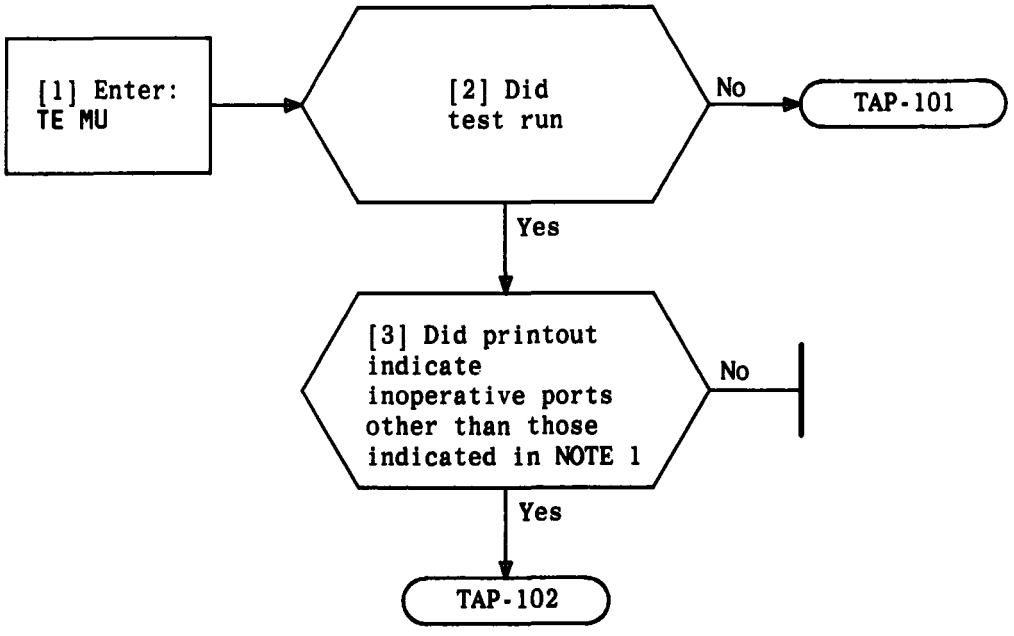

NOTE 1
Ports 6, 9, 10, 14, and 15 are always listed as inoperative. They are not equipped

PERFORM MULTIPLEX DIAGNOSTIC TEST – TE MU

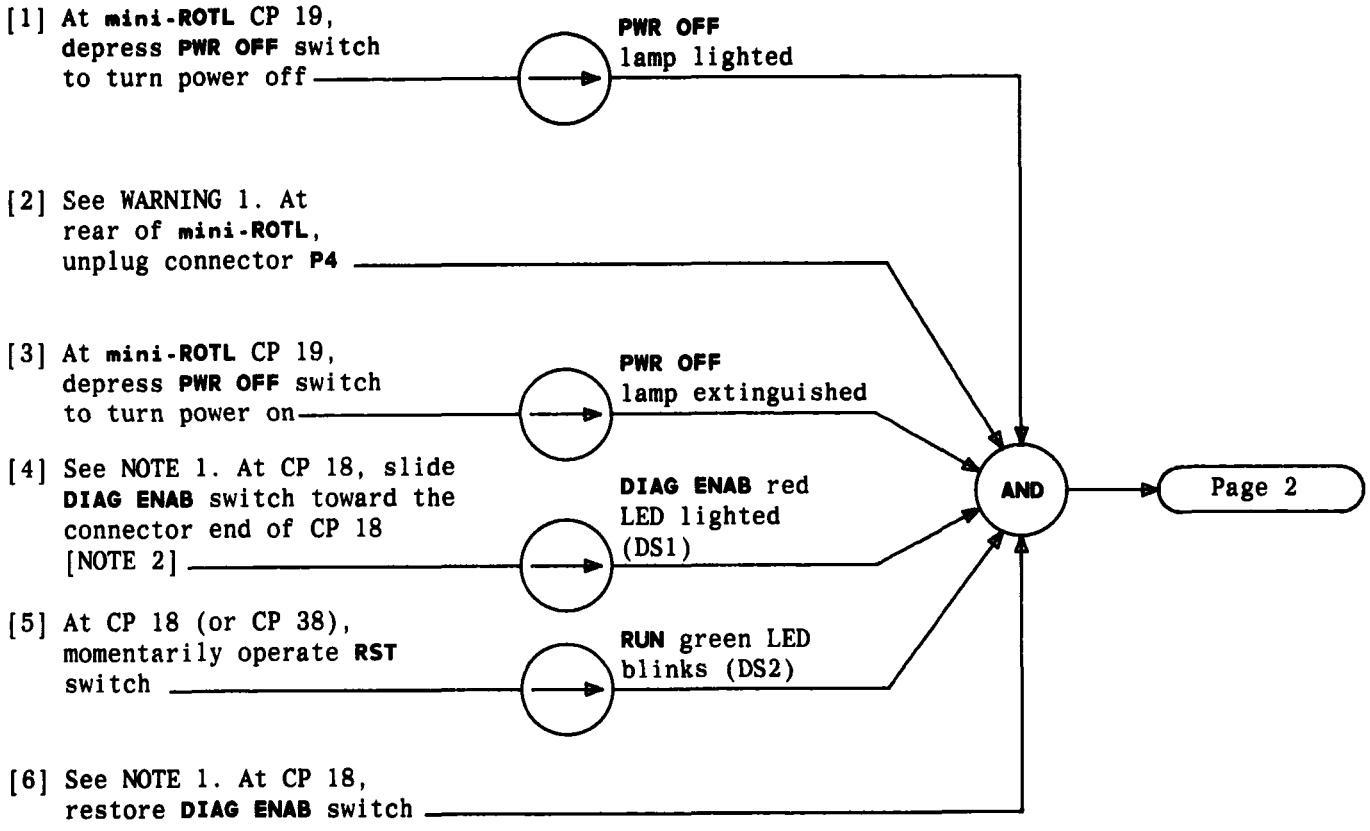

NOTES

1. This step should be omitted if the **mini-ROTL** is equipped with CP 38 instead of CP 18
2. **DIAG ENAB** is a slide switch located approximately 1 inch above the rear of the **RST** switch on CP 18

WARNING 1

To prevent equipment damage, connector P4 at rear of the mini-ROTL must be unplugged from backplane during this test

PERFORM MESSAGE CHANNEL DIAGNOSTIC TEST – TE MC

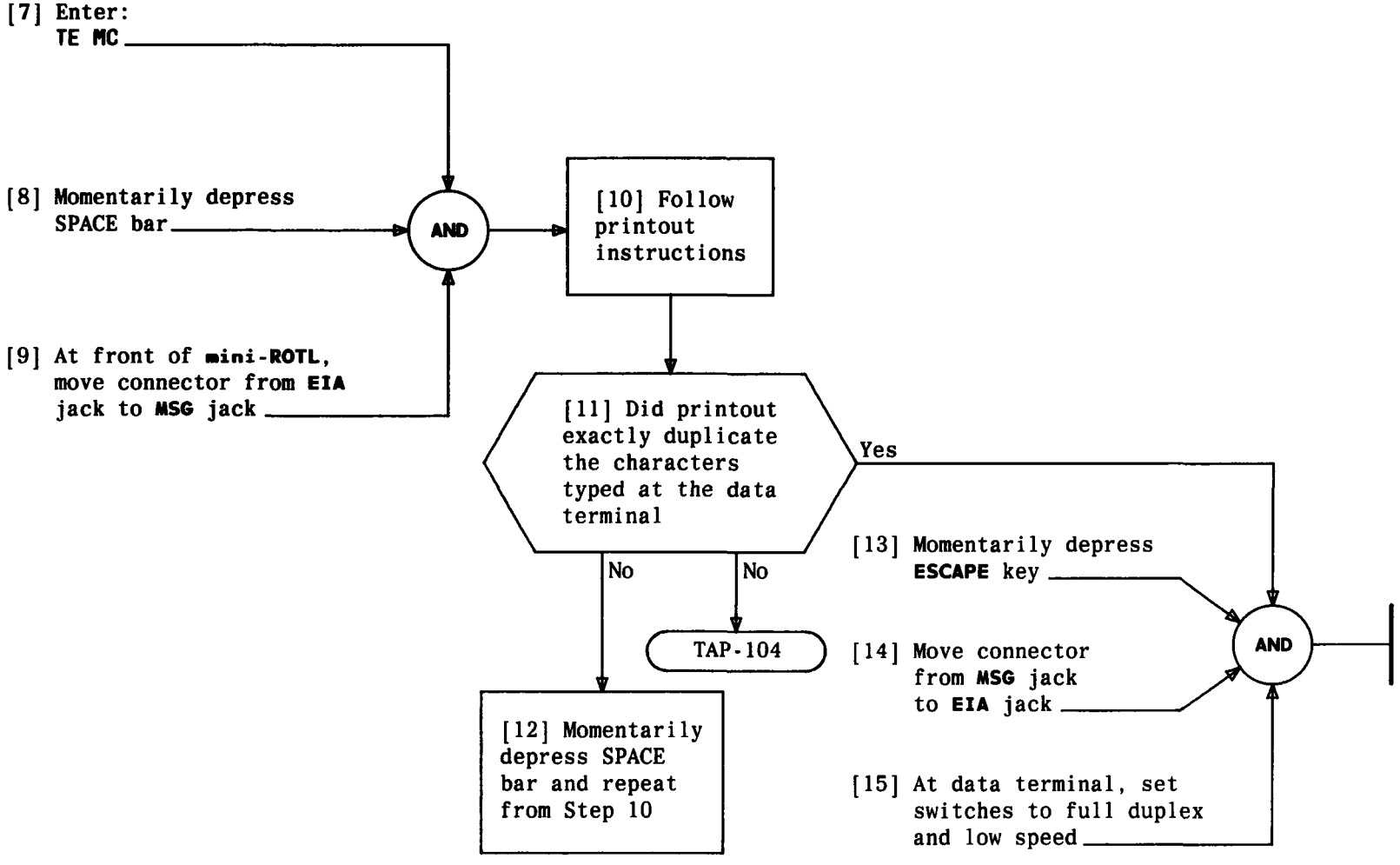

PERFORM MESSAGE CHANNEL DIAGNOSTIC TEST — TE MC

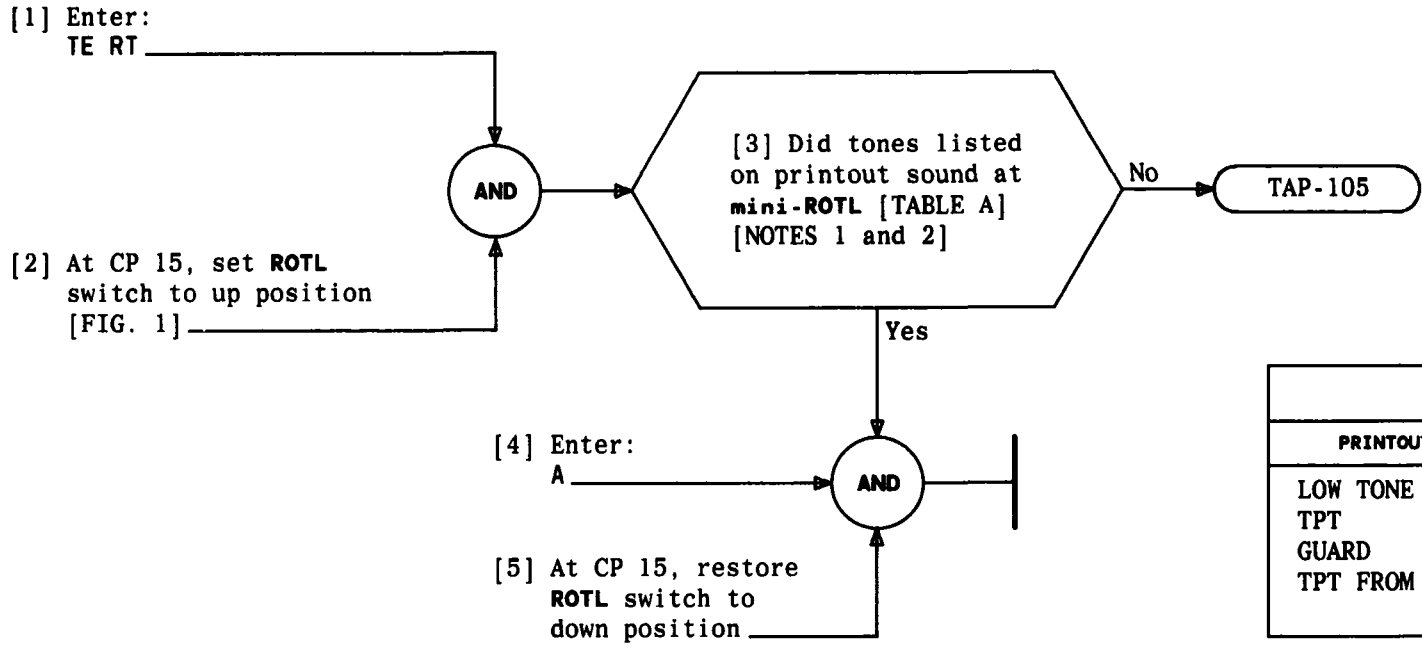

TABLE A	
PRINTOUT	TONE
LOW TONE	480 and 620 Hz
TPT	2225 Hz
GUARD	1200 Hz
TPT FROM AGC	2225 Hz test Progress tone

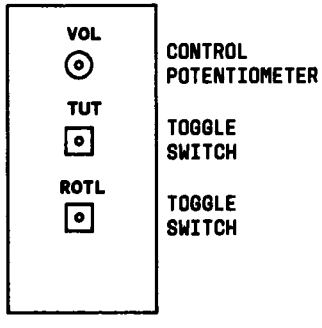

FIG. 1

NOTES

1. Volume can be controlled by VOL potentiometer at CP 15. Procedures for holding or continuing tones are on the printout
2. During low tone, typing H holds the tone for 10 seconds and typing C cancels the tone

PERFORM ROTL TONES DIAGNOSTIC TEST – TE RT

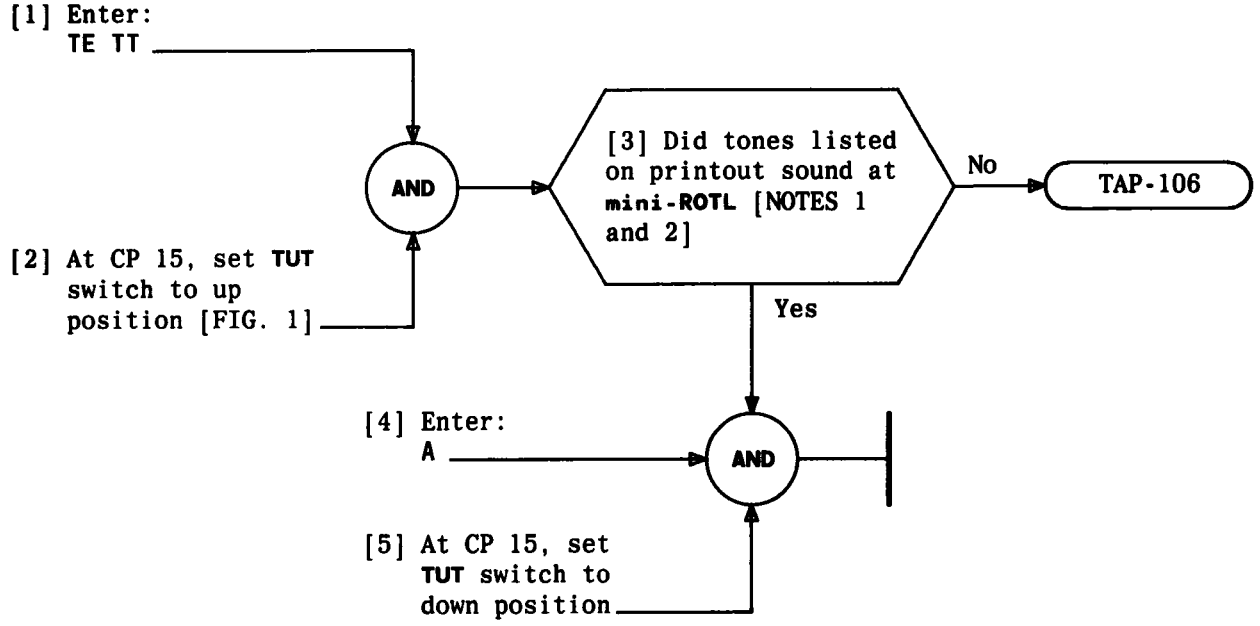

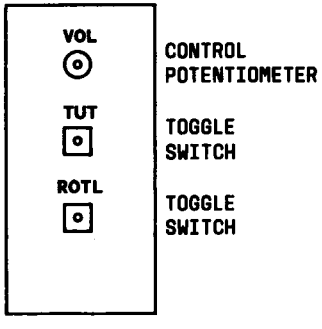

FIG. 1

NOTES

1. Volume can be controlled by **VOL** potentiometer at CP 15. Procedures for holding or continuing tones are on the printout
2. During low tone, typing H holds the tone for 10 seconds and typing C cancels the tone

Issue 2	DEC 1983
233-142-110	DLP
PAGE 1 of 1	520

PERFORM TRUNK TONES DIAGNOSTIC TEST – TE TT

PERFORM TONE DETECTOR DIAGNOSTIC TEST – TE TD

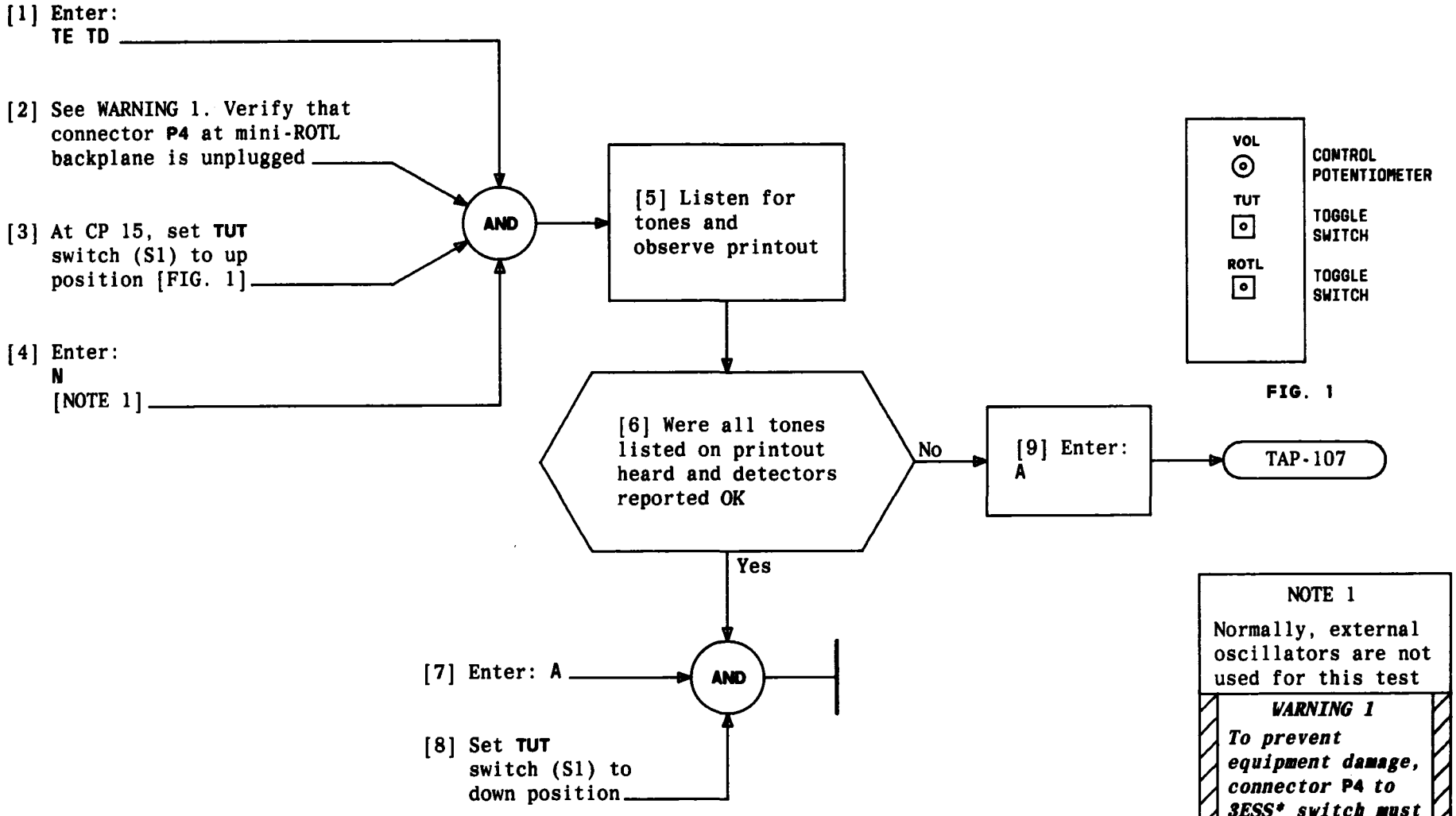

FIG. 1

NOTE 1

Normally, external oscillators are not used for this test

WARNING 1

To prevent equipment damage, connector P4 to 3ESS* switch must be unplugged at the mini-ROTL backplane during this test

* Trademark of Western Electric

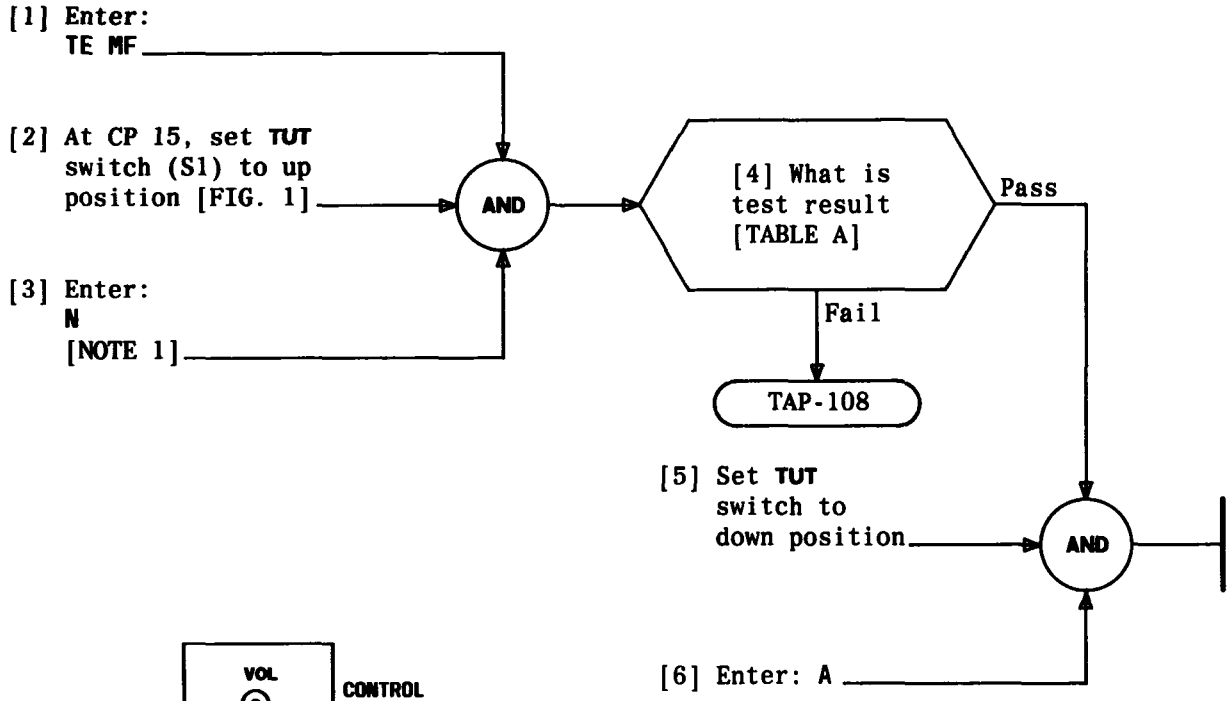

TABLE A	
TEST PASS INDICATION	TEST FAILURE INDICATION
A series of MF digits heard one at a time. MF DETECTOR OK printed	Tones not heard. MF DETECTOR OK not printed. ERROR MESSAGES, -10 DB THRESHOLD, -50 DB THRESHOLD printed

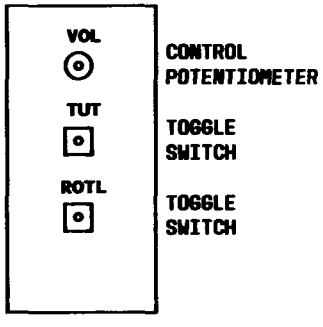

FIG. 1

NOTE 1

Normally, external oscillators are not used for this test

PERFORM MF DETECTOR DIAGNOSTIC TEST – TE MF

[1] At data terminal, enter:
TE TL

AND

[2] See WARNING 1. Verify that connector **P4** at **mini-ROTL** backplane is unplugged

[3] Patch **105A** jack on CP 20 to **T,R** jack on jack panel using **2P4A** patch cord

[4] At CP 15, set **TUT** switch to up position [FIG. 1]

[5] Momentarily depress SPACE bar and follow printout instructions

AND

[6] Are trouble conditions indicated on printout

Yes → TAP-109

No

[7] Remove patch from **105A** jack to **105B** jack

[8] At CP 15, set **TUT** switch to down position

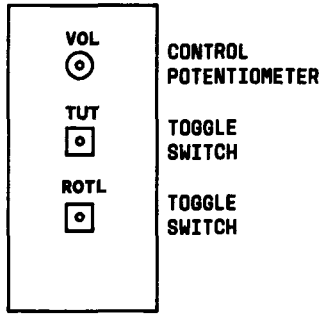

FIG. 1

WARNING 1

To prevent equipment damage, connector P4 to 3ESS* must be unplugged at the mini-ROTL backplane during this test

* Trademark of Western Electric

PERFORM 105-TEST LINE DIAGNOSTIC TEST – TE TL

[1] At data terminal, enter:
TE TR

[2] See WARNING 1. Verify that connector **P4** at **mini-ROTL** backplane is unplugged

AND

[3] At CP 15, set **TUT** switch to up position [FIG. 1]

[4] Patch **MWR** jack on jack panel to **CA** jack on CP 20 using **2P4A** patch cord

AND

[5] Patch **TUT** jack to **T,R** jack using **2P4A** patch cord

[6] Momentarily depress SPACE bar and follow printout instructions

[7] Does printout indicate trouble conditions

Yes → TAP-110

No

[8] Enter:
A

[9] Remove patches from **MWR** jack to **CA** jack

[10] At CP 15, set **TUT** switch to down position

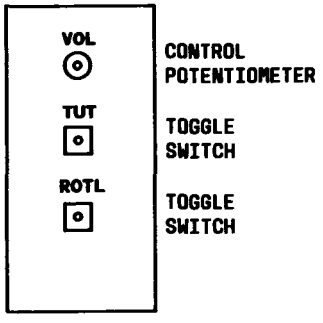

FIG. 1

WARNING 1

To prevent equipment damage, connector P4 to 3ESS* must be unplugged at the mini-ROTL backplane during this test

* Trademark of Western Electric

Issue 2	DEC 1983
233-142-110	DLP
PAGE 1 of 1	524

PERFORM PORT SELECT RELAYS DIAGNOSTIC TEST – TE TR

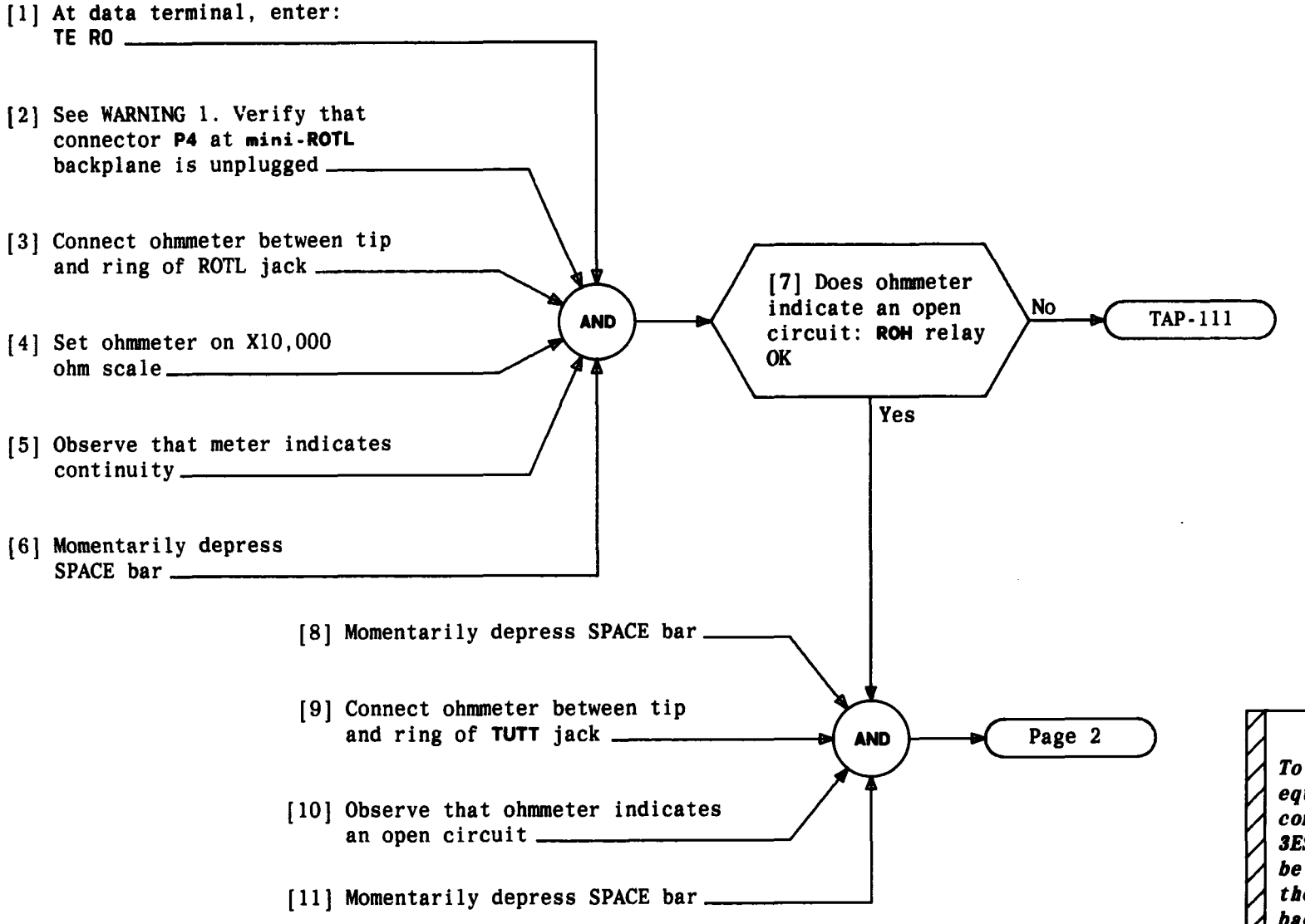

* Trademark of Western Electric

WARNING 1

To prevent equipment damage, connector P4 to 3ESS* switch must be unplugged at the mini-ROTL backplane during this test

Issue 2	DEC 1983
233-142-110	DLP
PAGE 1 of 2	525

PERFORM PORT CONTINUITY RELAY DIAGNOSTIC TEST – TE RO

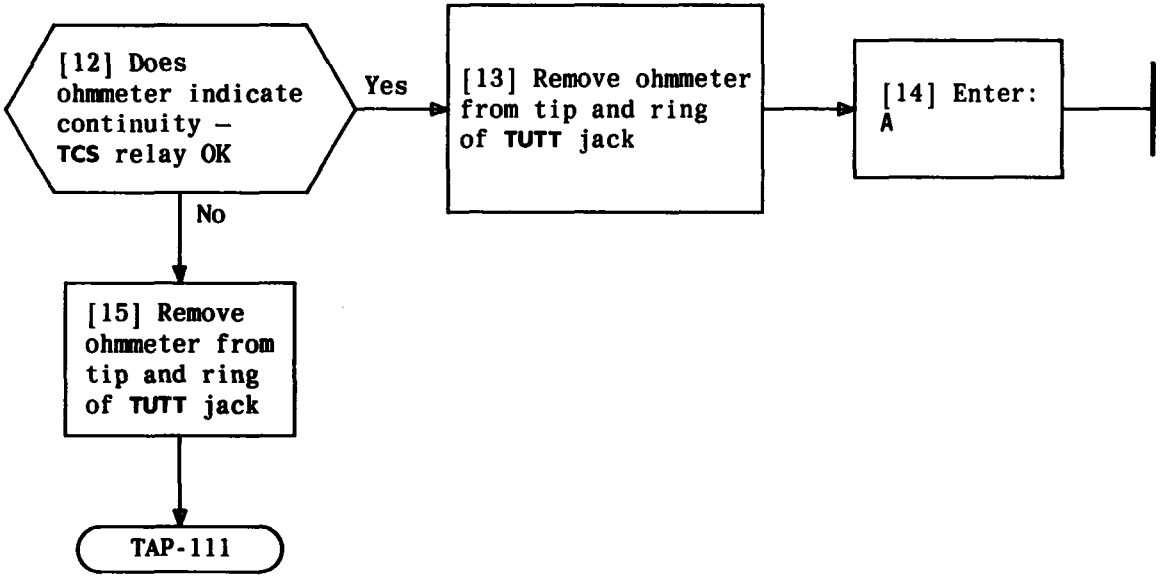

PERFORM PORT CONTINUITY RELAY DIAGNOSTIC TEST – TE RO

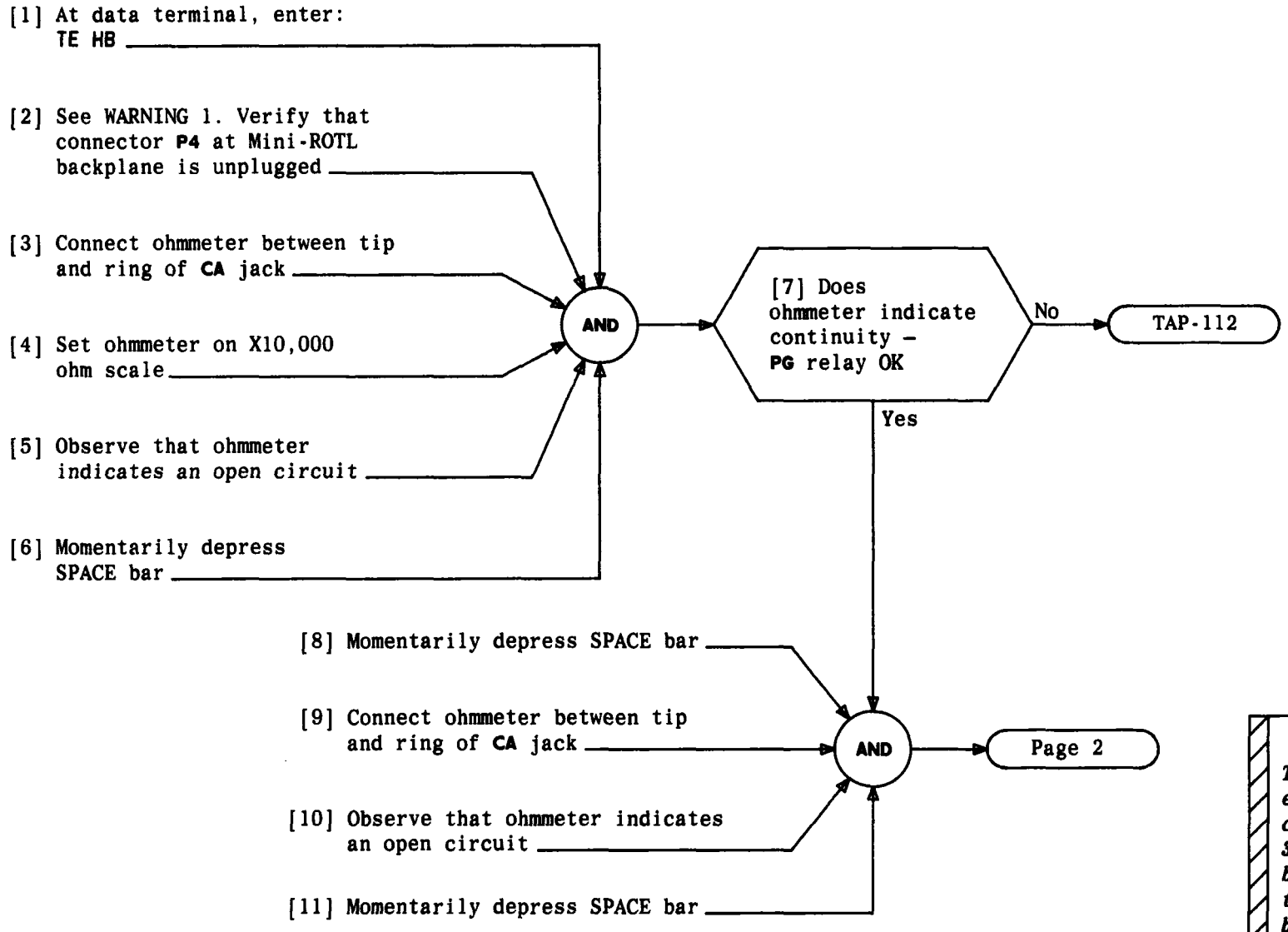

* Trademark of Western Electric

WARNING 1

To prevent equipment damage, connector P4 *to 3ESS* switch must be unplugged at the* mini-ROTL *backplane during this test*

Issue 2	DEC 1983
233-142-110	DLP
PAGE 1 of 2	526

PERFORM HOLD COIL AND PULSING RELAY DIAGNOSTIC TEST – TE HB

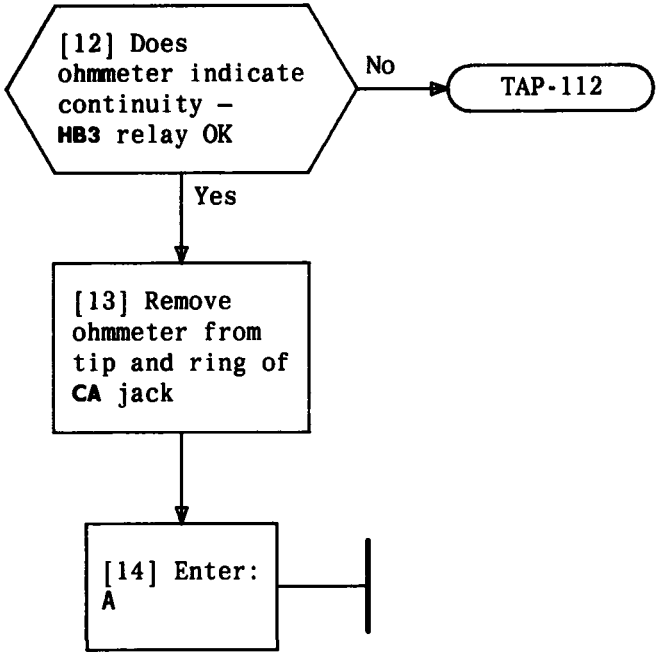

PERFORM HOLD COIL AND PULSING RELAY DIAGNOSTIC TEST – TE HB

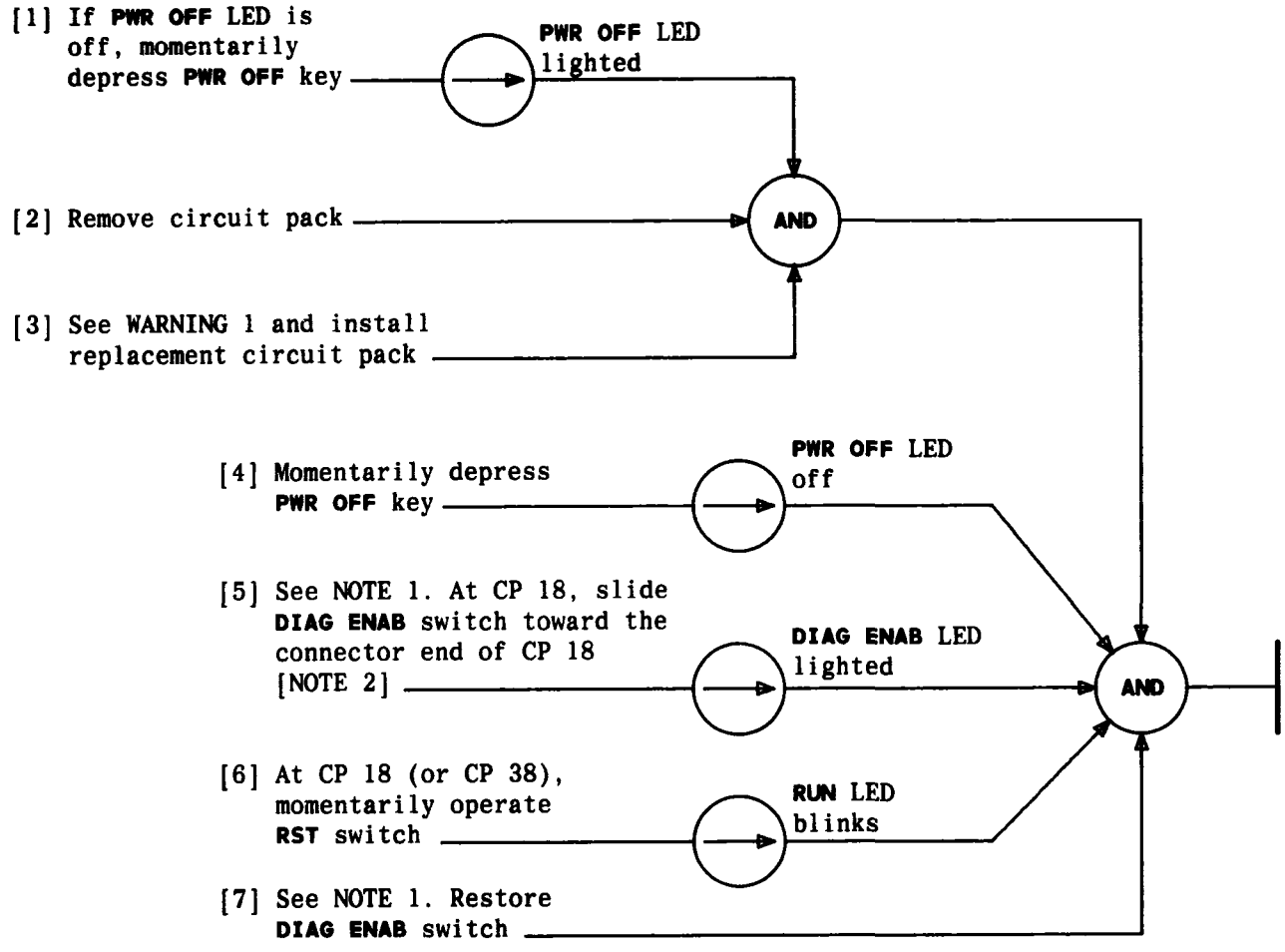

NOTES

1. This step should be omitted if the **mini-ROTL** is equipped with CP 38 instead of CP 18
2. **DIAG ENAB** is a slide switch located approximately 1 inch above the rear of **RST** switch on CP 18

WARNING 1

Pins in the backplane are fragile and easily bent. The circuit pack or extender should slide smoothly with perceptible tension as the pins and connector engage

REPLACE CIRCUIT PACK

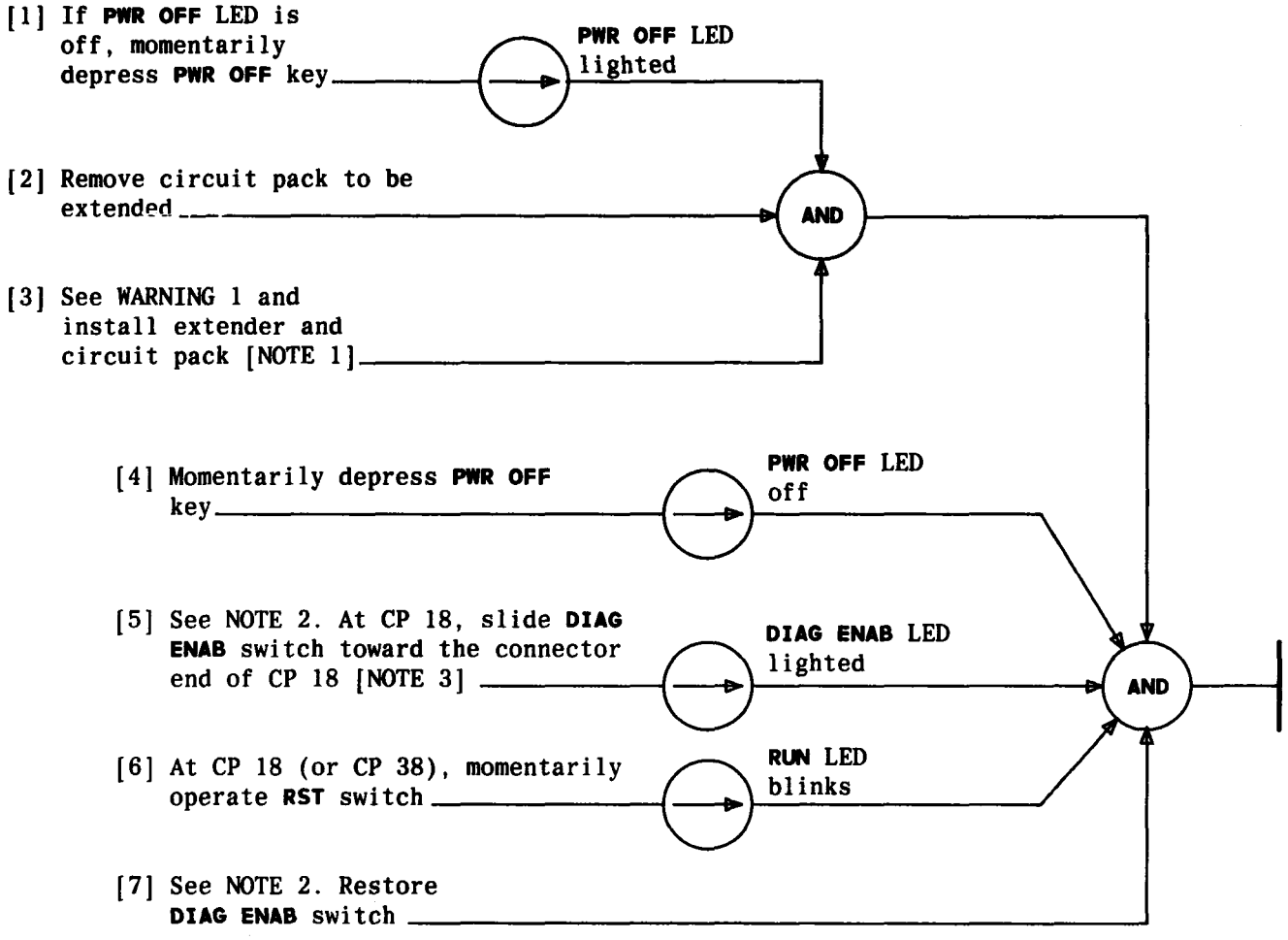

NOTES

1. The circuit pack should be installed in the extender before installing the extender
2. This step should be omitted if the **mini-ROTL** is equipped with CP 38 instead of CP 18
3. **DIAG ENAB** is a slide switch located approximately 1 inch above the rear of **RST** switch on CP 18

WARNING 1

Pins in the backplane are fragile and easily bent. The circuit pack or extender should slide smoothly with perceptible tension as the pins and connector engage

EXTEND CIRCUIT PACK

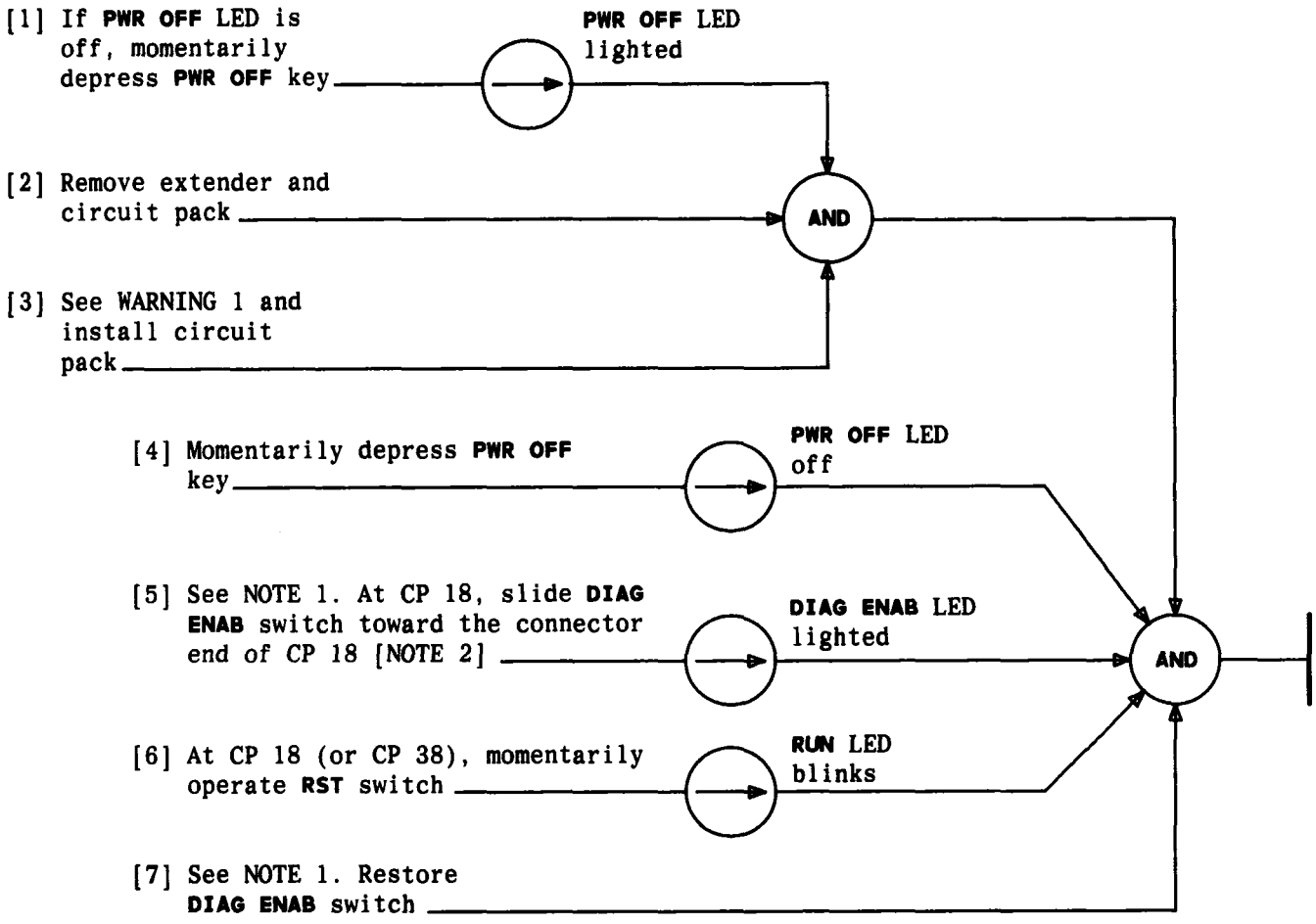

NOTES

1. This step should be omitted if the **mini-ROTL** is equipped with CP 38 instead of CP 18
2. **DIAG ENAB** is a slide switch located approximately 1 inch above the rear of **RST** switch on CP 18

WARNING 1

Pins in the backplane are fragile and easily bent. The circuit pack should slide smoothly with perceptible tension as the pins and connector engage

REMOVE EXTENDED CIRCUIT PACK AND REINSTALL WITHOUT EXTENDER

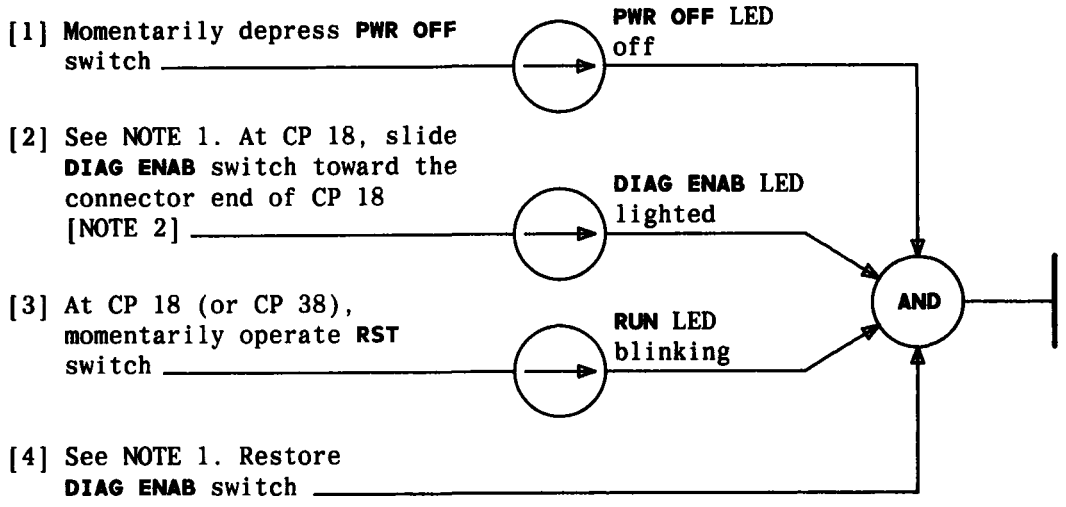

NOTES

1. This step should be omitted if the **mini-ROTL** is equipped with CP 38 instead of CP 18
2. **DIAG ENAB** is a slide switch located approximately 1 inch above the rear of **RST** switch on CP 18

Issue 2	DEC 1983
233-142-110	DLP
PAGE 1 of 1	530

RESTORE POWER

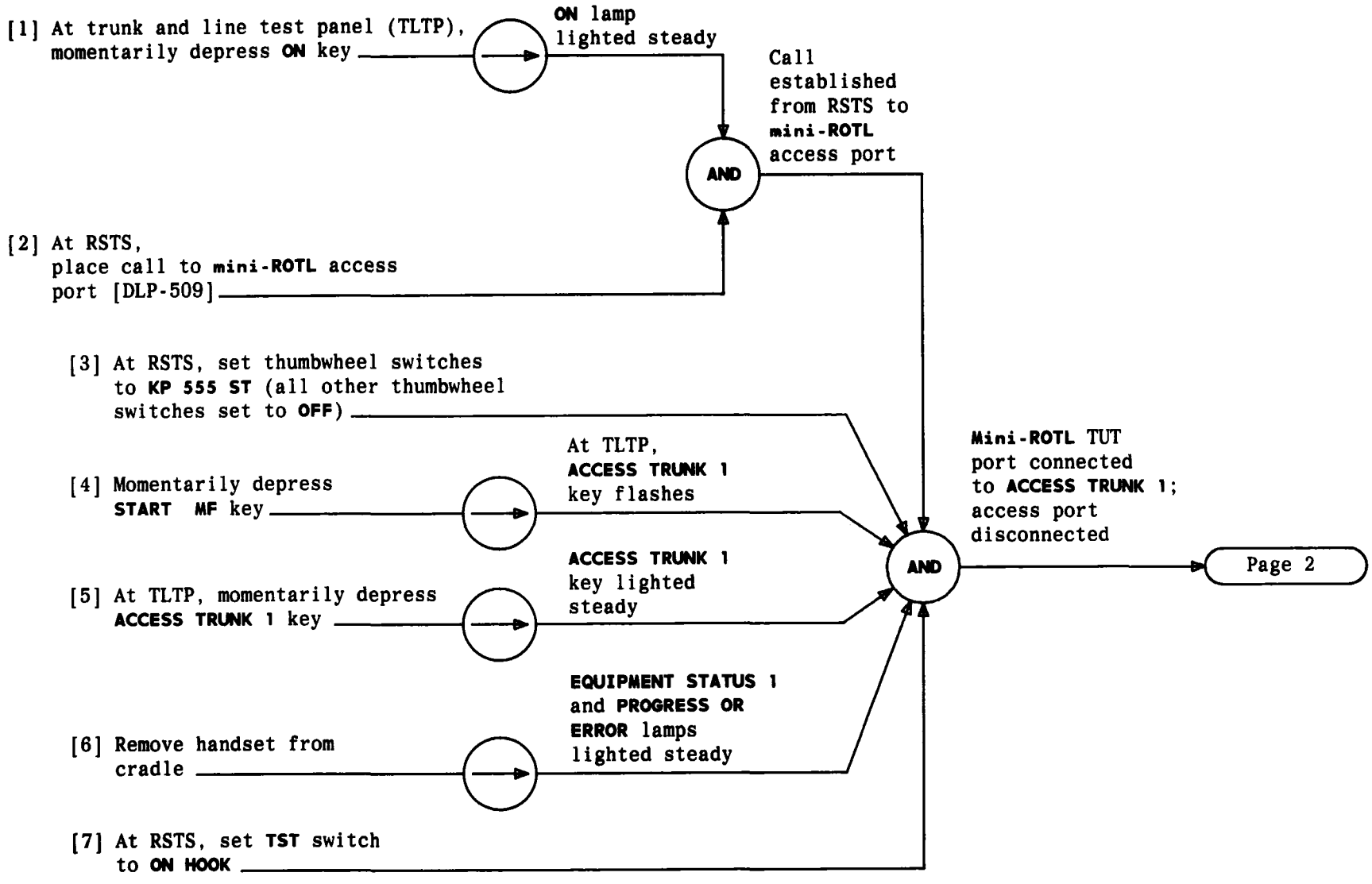

ESTABLISH OFFICE CONNECTIONS TO MINI-ROTL TUT PORT USING H-310-150 ROTL SYSTEM TEST SET (RSTS)

[8] At TLTP, set: **STATE CONTROL** to **ACCESS TRUNK 1**; **ASSOCIATED JUNCTOR** to **YES**; **$\overline{A}$ $\overline{B}$ C** [NOTE 1]

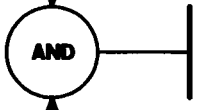

[9] Momentarily depress **EXECUTE**

NOTE 1
The **$\overline{A}$ $\overline{B}$ C** switch settings are as follows:
$\overline{A}$ down
$\overline{B}$ down
C up

ESTABLISH OFFICE CONNECTIONS TO MINI-ROTL TUT PORT USING H-310-150 ROTL SYSTEM TEST SET (RSTS)

[1] From office records Form ESS* 3107-2, identify telephone number assigned ETYP 10, ROTL assignment, and any member number (0 through 4)

[2] From Form ESS 3100, identify and record office equipment number (OE *gg cwsi*) assigned to telephone number identified in Step 1 [TABLE A]

[3] From Form ESS 3100, identify and record any unassigned telephone number (TN N*xx xxxx*) [TABLE A]

[4] From Form ESS 3100-1B, identify any office code and telephone number used as billing number

[5] From Form ESS 3100, identify unassigned telephone number having same office code and thousands digit as number identified in Step 4

[6] Using telephone number identified in Step 5, record BTN N*xx xxxx* [TABLE A]

[7] From Form ESS 3500-2, identify office code and telephone number of trunk and line test panel access trunk 1

[8] Using number identified in Step 7, record return telephone number (RTN Nxx xxxx) [TABLE A]

AND

AND

[9] At maintenance TTY, type input message indicated in TABLE A

TABLE A	
INPUT MESSAGE	REFERENCE
RC:LINE/	
ORD 9999/	
TYP NEW/	
OE *gg cwsi*/	Step 2
TN N*xx xxxx*/	Step 3
BTN N*xx xxxx*/	Step 6
RTN N*xx xxxx*/	Step 8
LCC ATC/	
GST YES/	
ETYP 10/	
TER 5/	
RAML NO/	
PLIT YES/	
RMK ROTL SC TLTP1/	
END!	

* Trademark of Western Electric

ASSIGN SECURITY CALLBACK USER NO. 5 TO TRUNK AND LINE TEST PANEL ACCESS TRUNK 1

[1] From office equipment (OE) number identify the concentrator group (CG), concentrator (C), switch group (SG), switch, and level [NOTE 1]

[2] At distributing frame shelf B, C, D, E, or F, locate the OE terminal [FIG. 1]

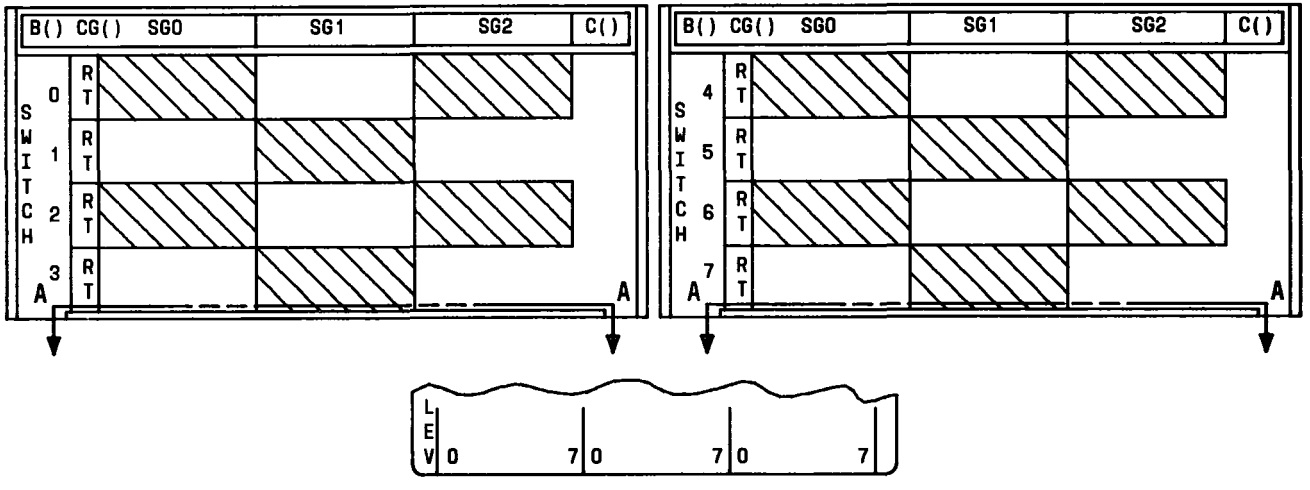

SECT. A-A

FIG. 1 – Connecting Blocks for One Concentrator

NOTE 1

The office equipment number identifies the following:

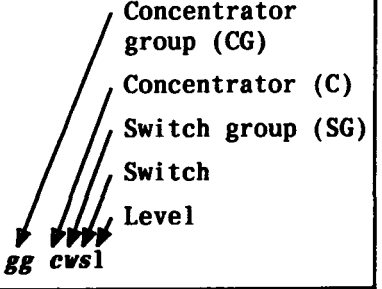

Issue 2	DEC 1983
233-142-110	DLP
PAGE 1 of 1	533

LOCATE OFFICE EQUIPMENT TERMINAL AT DISTRIBUTING FRAME

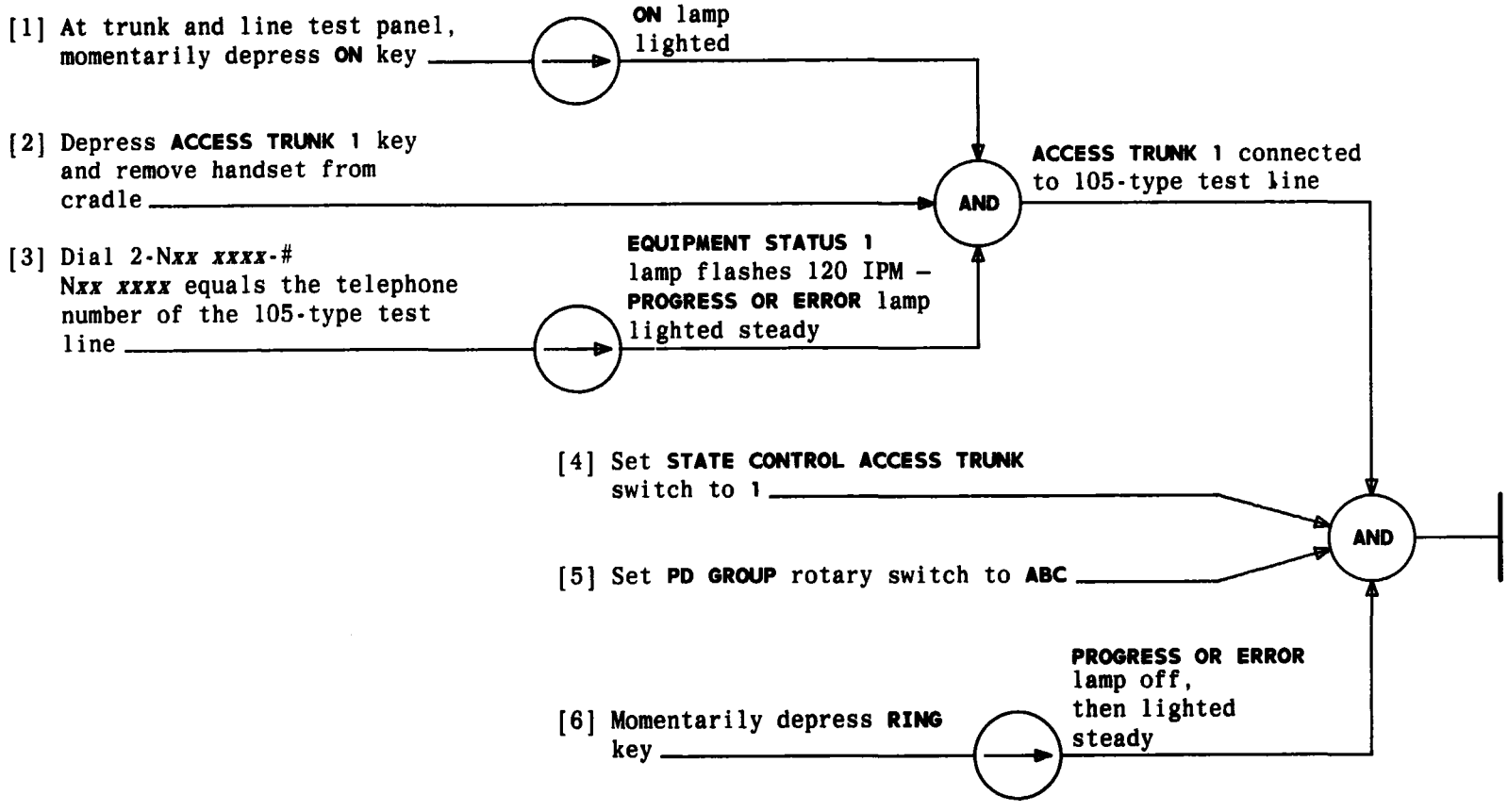

ESTABLISH CONNECTION FROM TRUNK AND LINE TEST PANEL TO 105-TYPE TEST LINE AND TRIP RINGING

[1] Set reference level test set (RTS) switches [TABLE A]

[2] Using power cord provided with RTS, connect RTS to 110 Vac power

[3] Depress **ON/OFF** switch to turn power on

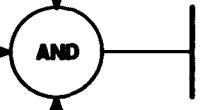

TABLE A	
SWITCH	SETTING
METER RANGE	±.1DB
INPUT LEVEL	0
INPUT	900 Ω DBM TERM
FUNCTION	MEAS INPUT
OUTPUT	OFF

SET UP REFERENCE LEVEL TEST SET

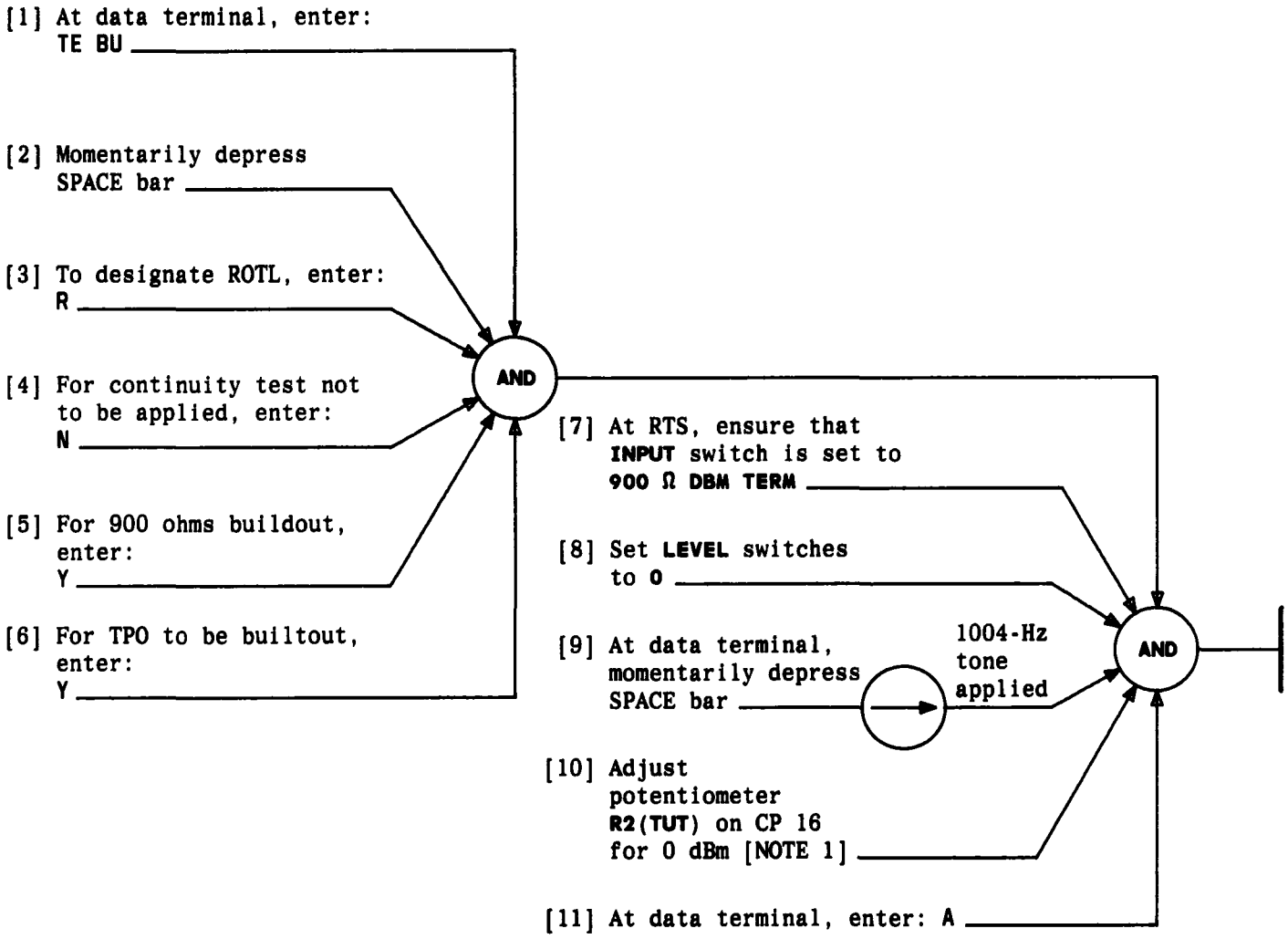

NOTE 1
Potentiometer **R2 (TUT)** is a 30-turn pot. It may be necessary to make several turns before there is an indication

Issue 2	DEC 1983
233-142-110	DLP
PAGE 1 of 1	536

ADJUST MINI-ROTL CP 16 POTENTIOMETER R2 FOR ROTL BUILDOUT

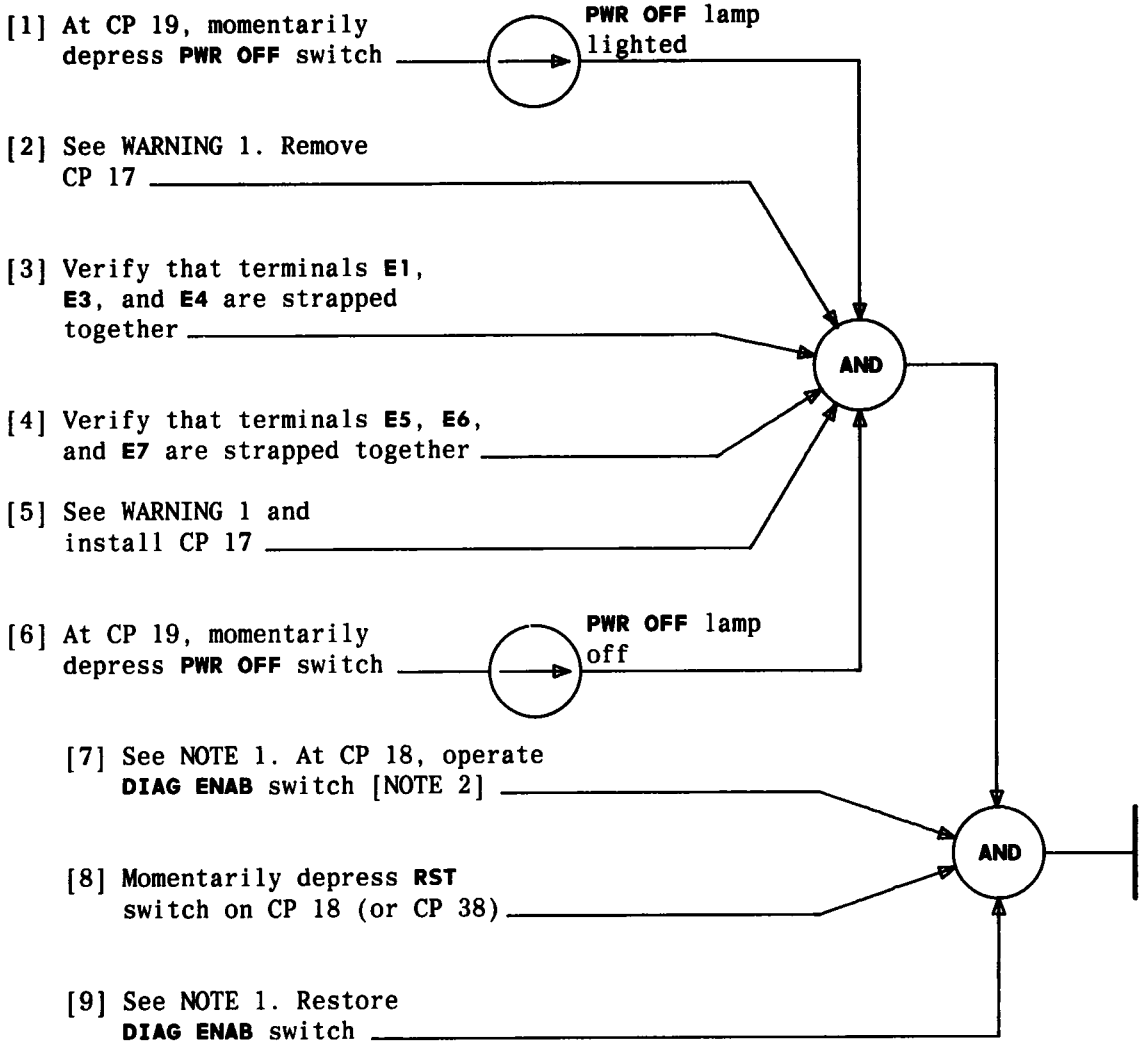

VERIFY THAT 105 TEST LINE IMPEDANCE AND LEVEL STRAPS ARE IN PLACE

NOTES

1. This step should be omitted if the **mini-ROTL** is equipped with CP 38 instead of CP 18
2. **DIAG ENAB** is a slide switch located approximately 1 inch above the rear of **RST** switch on CP 18

WARNING 1

Pins in the backplane are fragile and easily bent. The circuit pack should slide smoothly with perceptible tension as the pins and connector engage

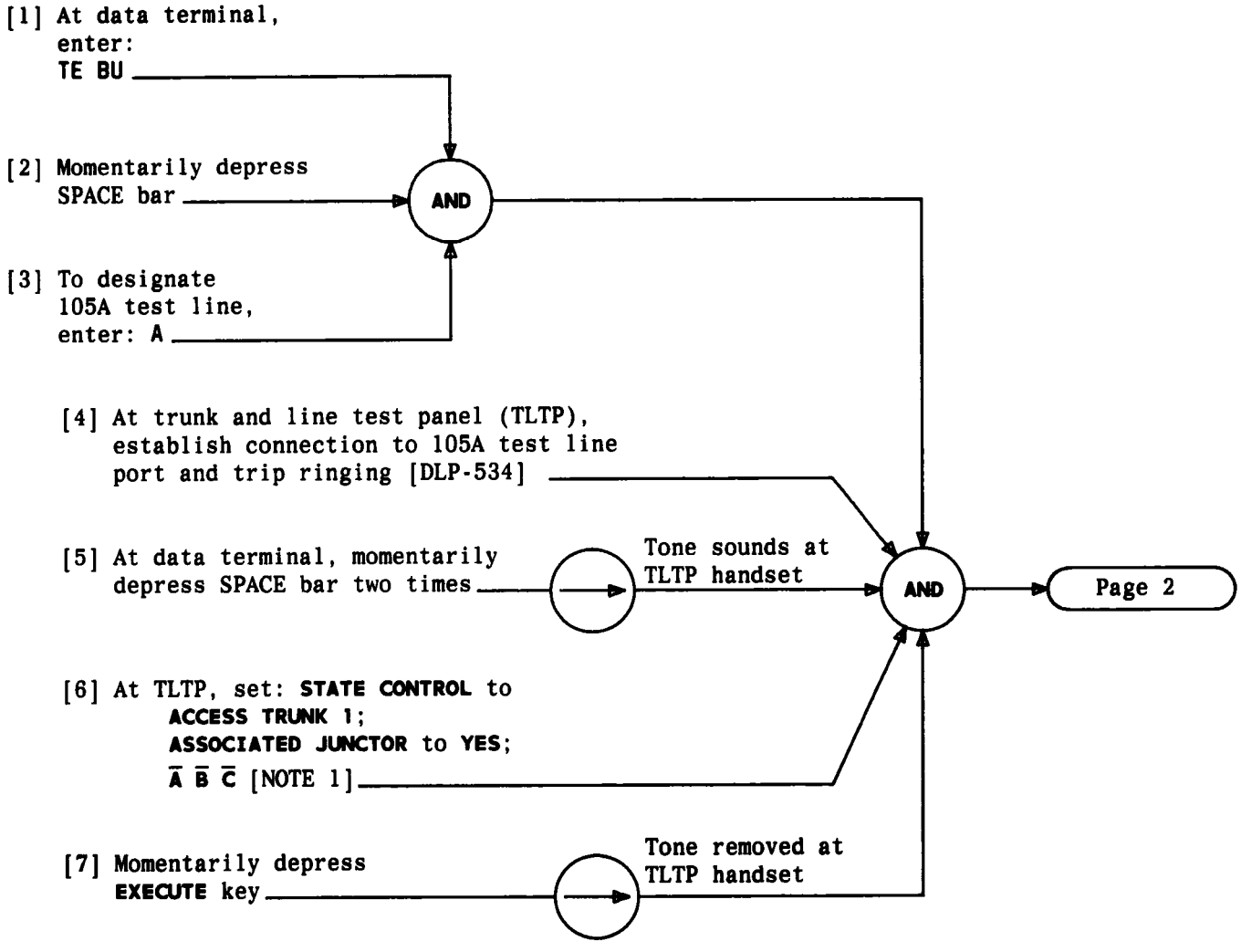

NOTE 1
The Ā B̄ C̄ switch settings are as follows:
Ā down
B̄ down
C̄ down

Issue 2	DEC 1983
233-142-110	DLP
PAGE 1 of 2	538

BUILD OUT 105A TEST LINE

[8] Using **3P15A** cord, connect reference level test set (RTS) **INPUT 310** jack to 105A test line appearance (OE) at combined distributing frame [DLP-533]

[9] At CP 16, adjust 105 TL1 build-out potentiometer **R12** for 0-dBm indication at RTS

[10] Remove RTS connection at distributing frame [NOTE 1]

[11] At TLTP, set **ASSOCIATED JUNCTOR** to **NO**

[12] At TLTP, momentarily depress **RELEASE 1**

[13] At data terminal, enter: **A**

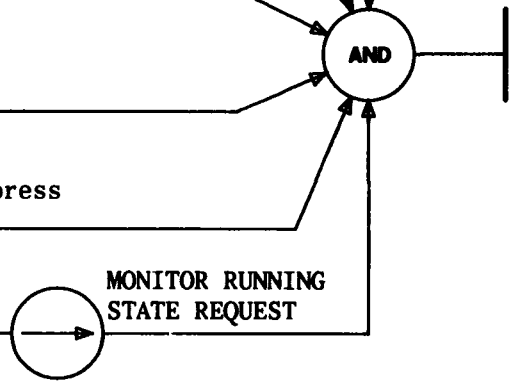

NOTE 1
Potentiometer 105 TL1 (**R12**) is a 30-turn pot. It may be necessary to make several turns before an indication

BUILD OUT 105A TEST LINE

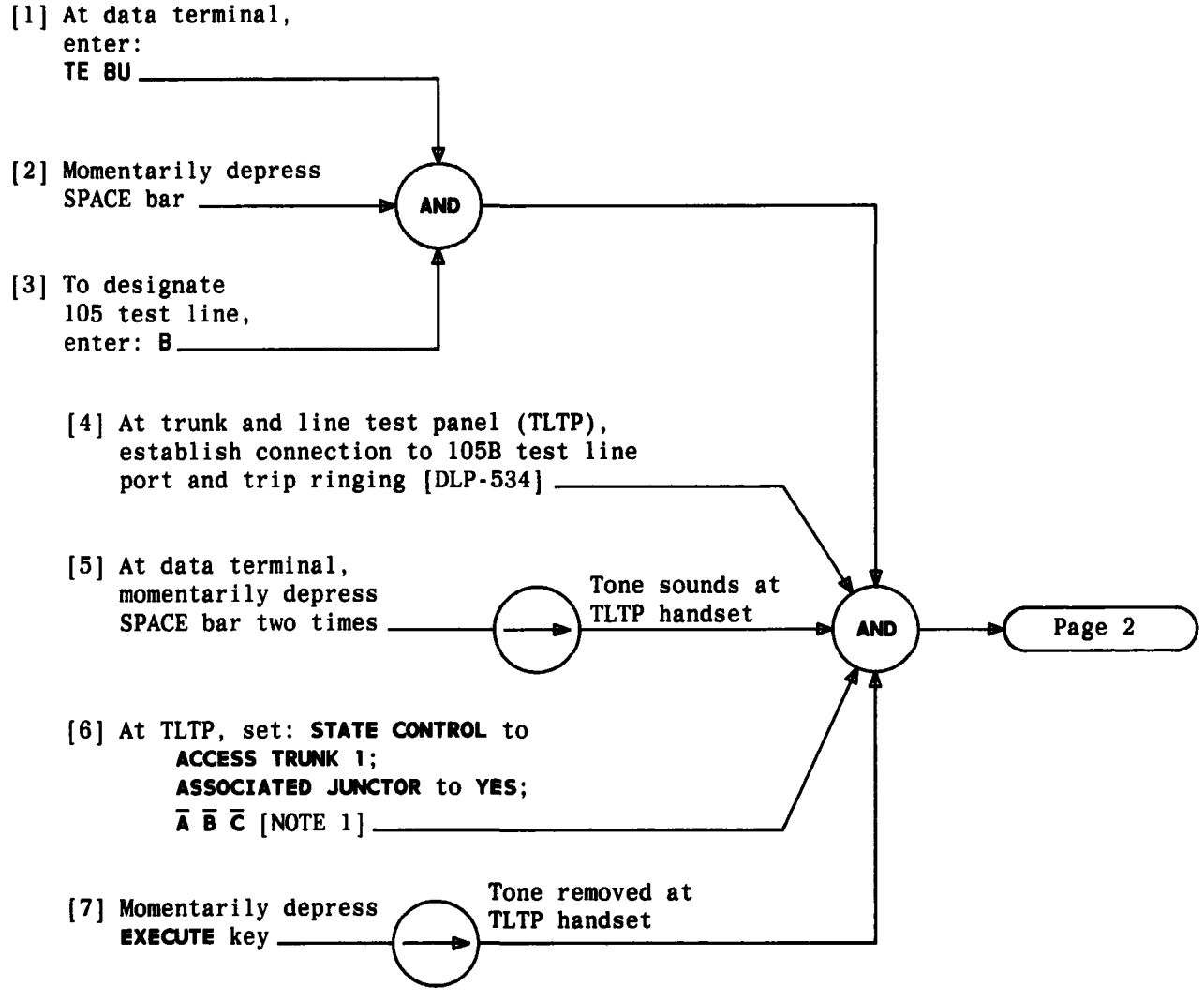

NOTE 1
The $\overline{A}$ $\overline{B}$ $\overline{C}$ switch settings are as follows:
$\overline{A}$ down
$\overline{B}$ down
$\overline{C}$ down

Issue 2	DEC 1983
233-142-110	DLP
PAGE 1 of 2	539

BUILD OUT 105B TEST LINE

[8] Using cord provided with reference level test set (RTS), connect RTS **INPUT 310** jack to 105B test line appearance (OE) at combined distributing frame [DLP-533]

[9] At CP 16, adjust 105 TL2 build-out potentiometer **R19** for 0-dBm indication at RTS [NOTE 1]

[10] Remove RTS connection at distributing frame

[11] At TLTP, set **ASSOCIATED JUNCTOR** to **NO**

[12] At TLTP, momentarily depress **RELEASE 1**

[13] At data terminal, enter: **A**

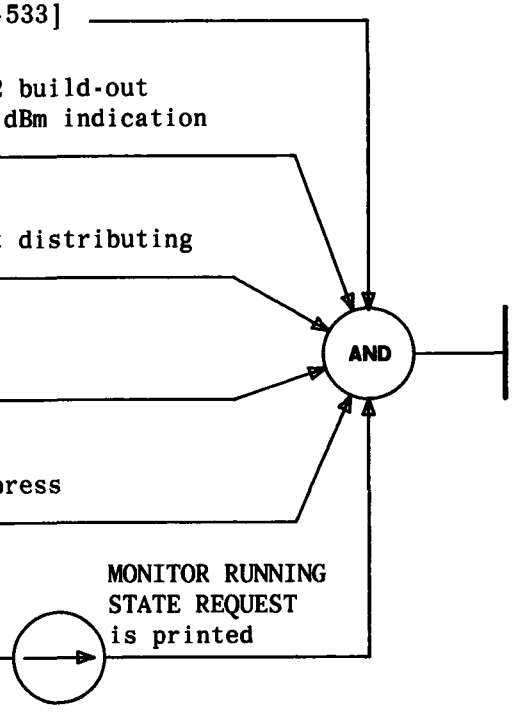

NOTE 1
Potentiometer 105 TL2 (**R19**) is a 30-turn pot. It may be necessary to make several turns before an indication

BUILD OUT 105B TEST LINE

SET UP DATA TERMINAL WITHOUT POWERING DOWN

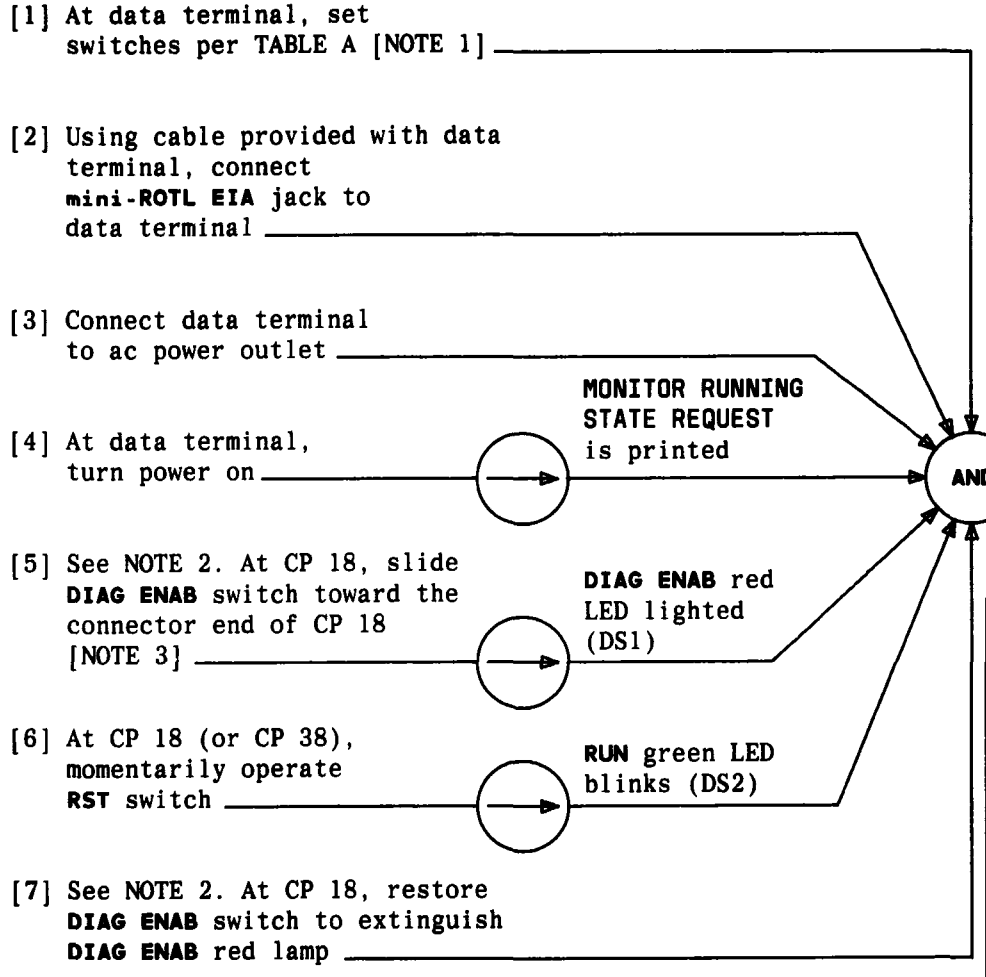

TABLE A
EXECUPORT SWITCH SETTINGS

SWITCH	POSITION
MODE	ISOLATE
DUPLEX	FULL
CHAR/SEC	10
PARITY	Either ODD or EVEN
QSL	UPPER
LINE SPACING SWITCH	Back (2-position slide switch mounted on right side of paper roll)
POWER	OFF (on back)
ON LINE	ON LINE

NOTES

1. Normally a power-down and power-up procedure is performed at the **mini-ROTL** when setting up the data terminal. When performing the ROTL buildout, the **mini-ROTL** should not be powered down and powered up because the ROTL connection will be lost
2. This step should be omitted if the **mini-ROTL** is equipped with CP 38 instead of CP 18
3. **DIAG ENAB** is a slide switch located approximately 1 inch above the rear of the **RST** switch on CP 18

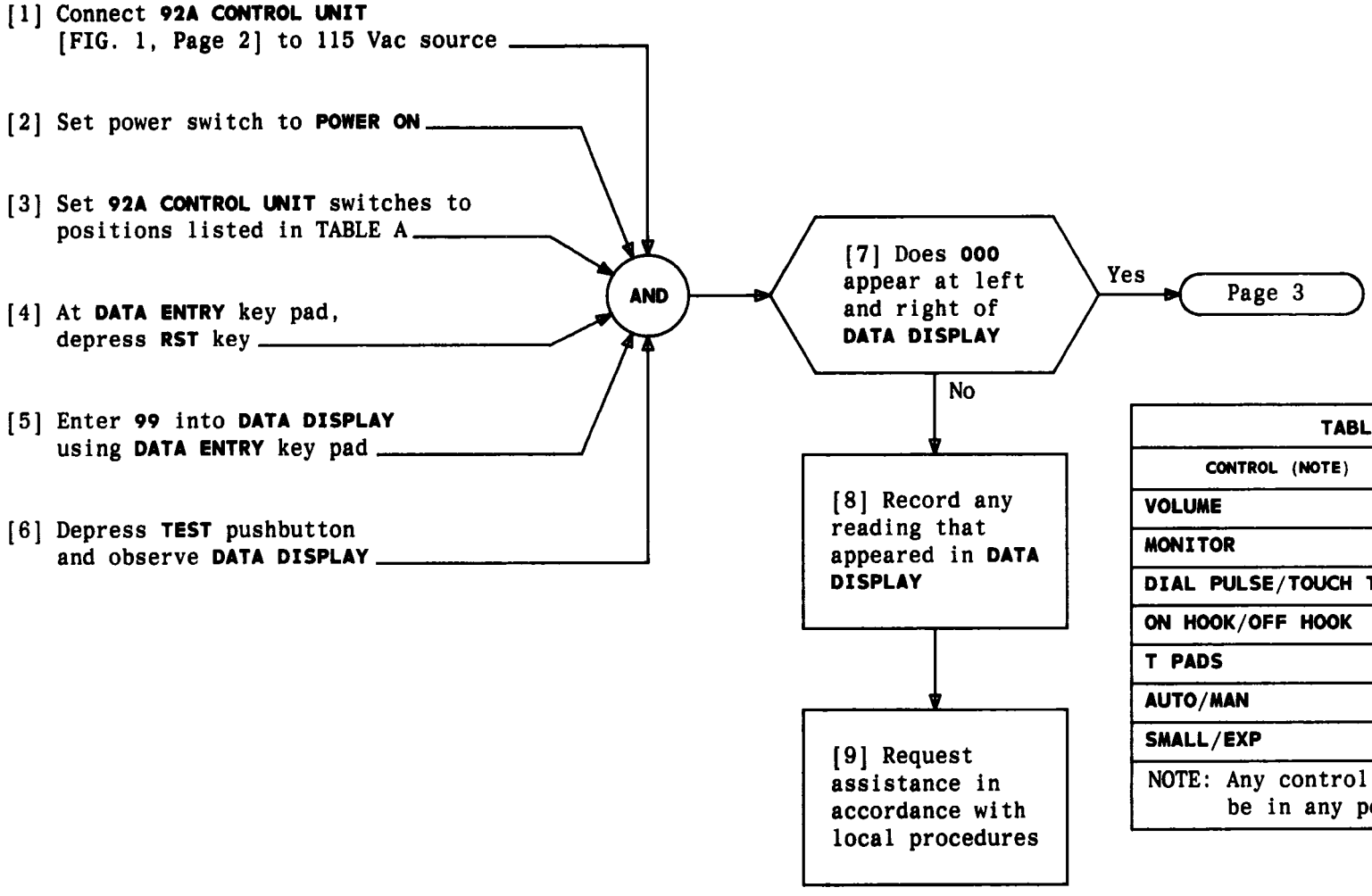

TABLE A	
CONTROL (NOTE)	POSITION
VOLUME	Midrange
MONITOR	LOOP
DIAL PULSE/TOUCH TONE	TOUCH TONE
ON HOOK/OFF HOOK	OFF HOOK
T PADS	0 dB
AUTO/MAN	AUTO
SMALL/EXP	SMALL
NOTE: Any control not listed may be in any position	

PERFORM 92A CONTROL UNIT SELF-TESTS

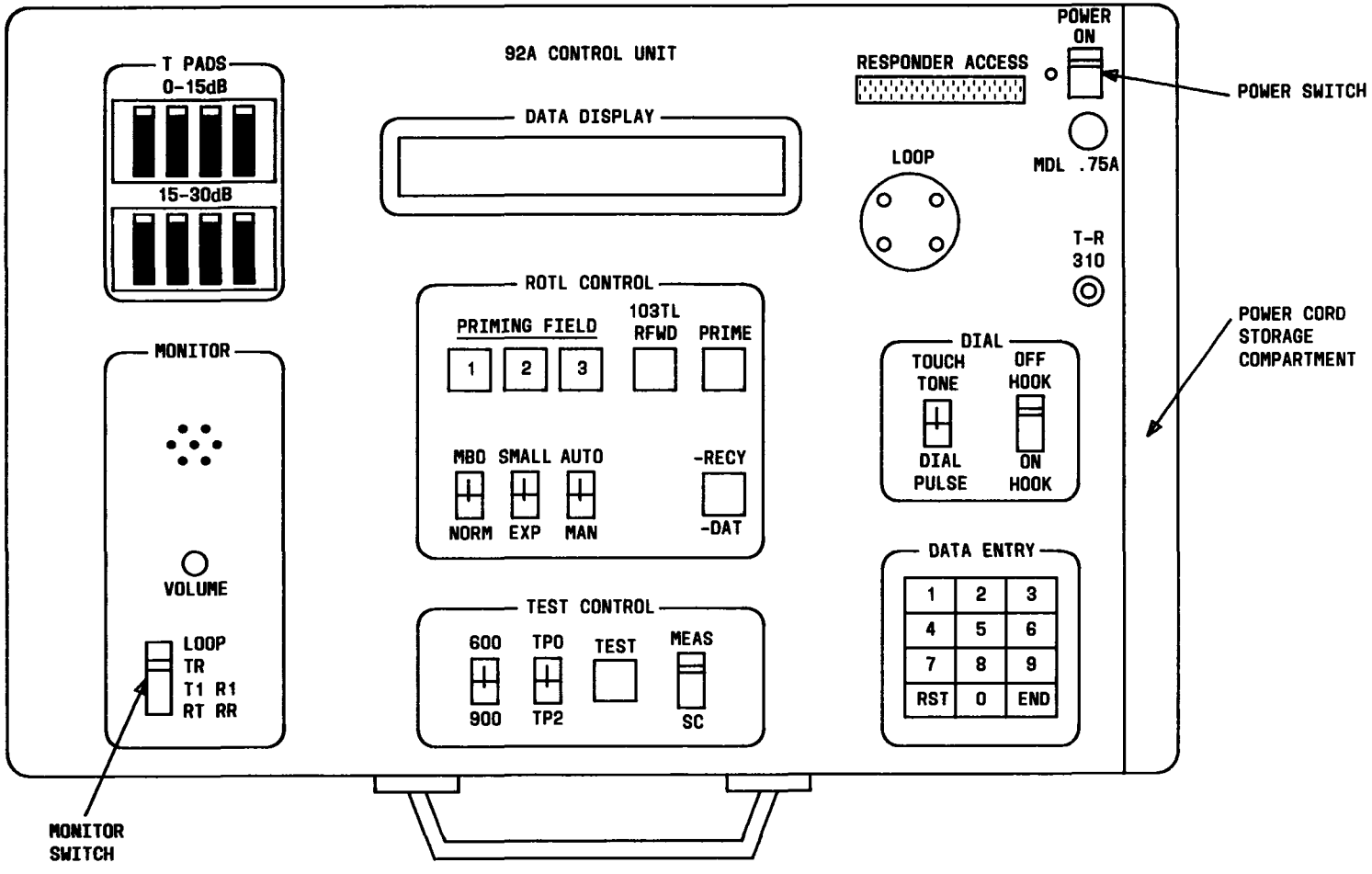

FIG. 1 – 92A Control Unit

Issue 2	DEC 1983
233-142-110	DLP
PAGE 2 of 6	541

PERFORM 92A CONTROL UNIT SELF-TESTS

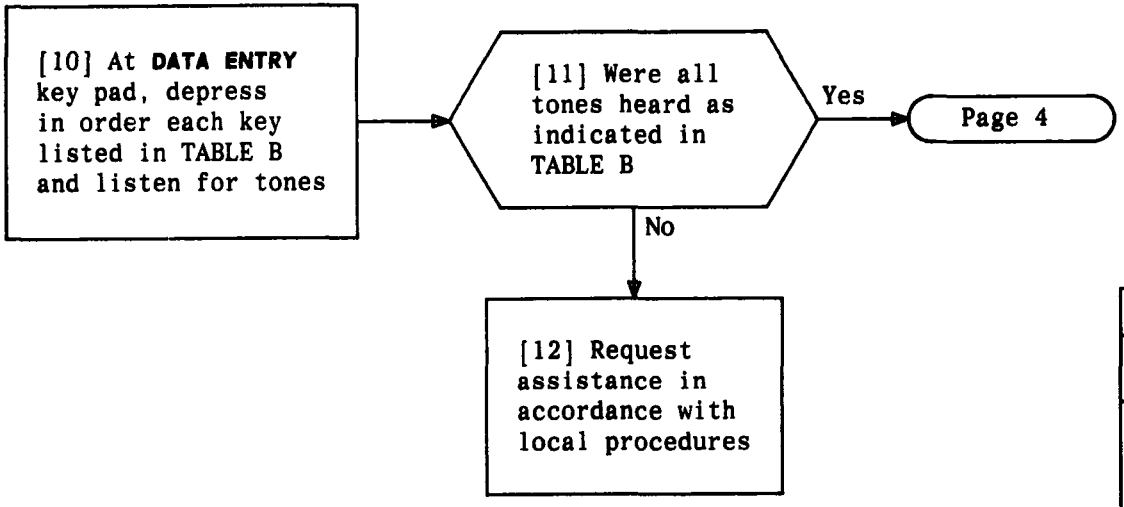

TABLE B

DATA ENTRY KEY	TONE (Hz)
1	700
2	900
3	1000
4	1100
5	1300
6	1500
7	1700
8	2225
9	None

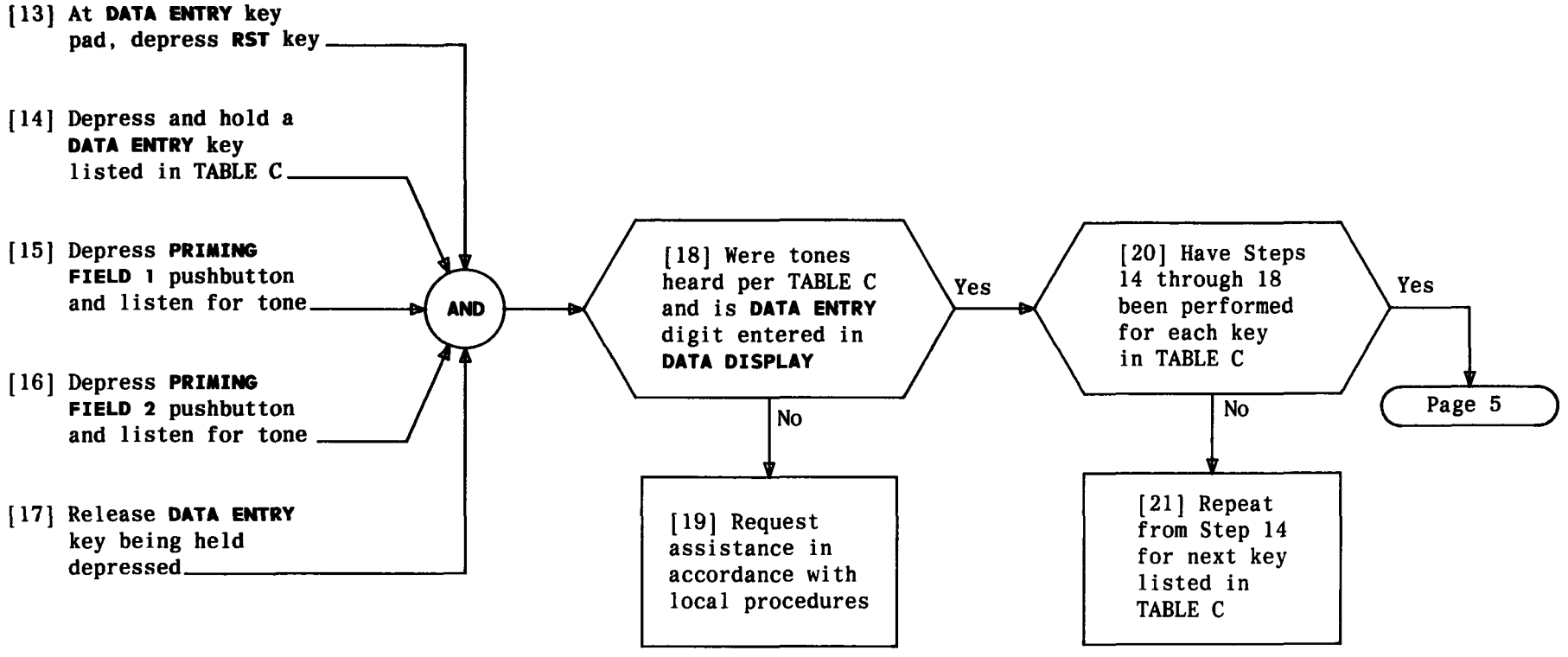

TABLE C

DATA ENTRY KEY	TONES HEARD FOR PRIMING FIELD 1	TONES HEARD FOR PRIMING FIELD 2	DATA DISPLAY CONTENTS
1	1209 Hz	697 Hz	1
5	1336 Hz	770 Hz	15
9	1477 Hz	852 Hz	159
0	1336 and 941 Hz	941 Hz	1590

PERFORM 92A CONTROL UNIT SELF-TESTS

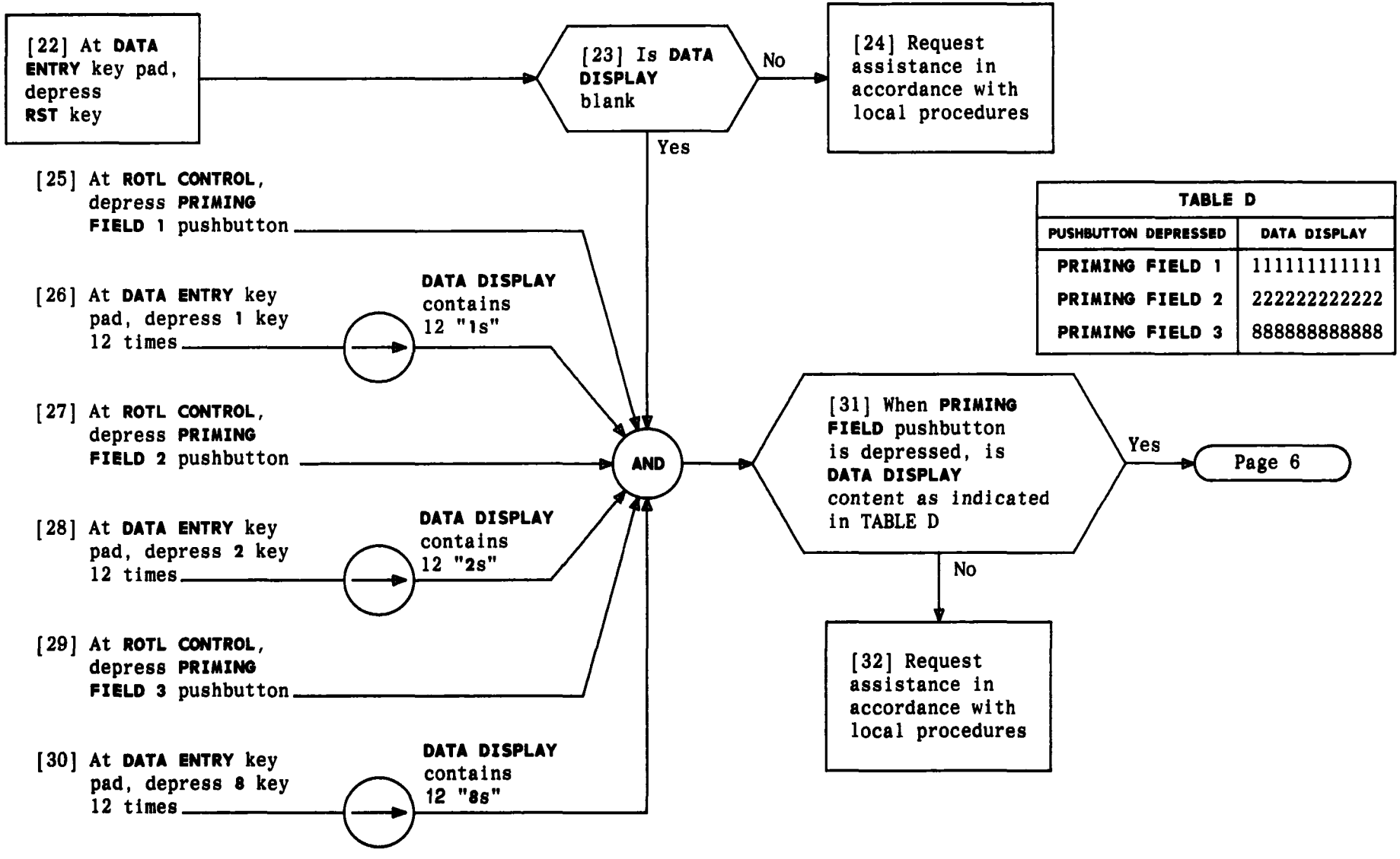

TABLE D

PUSHBUTTON DEPRESSED	DATA DISPLAY
PRIMING FIELD 1	111111111111
PRIMING FIELD 2	222222222222
PRIMING FIELD 3	888888888888

PERFORM 92A CONTROL UNIT SELF-TESTS

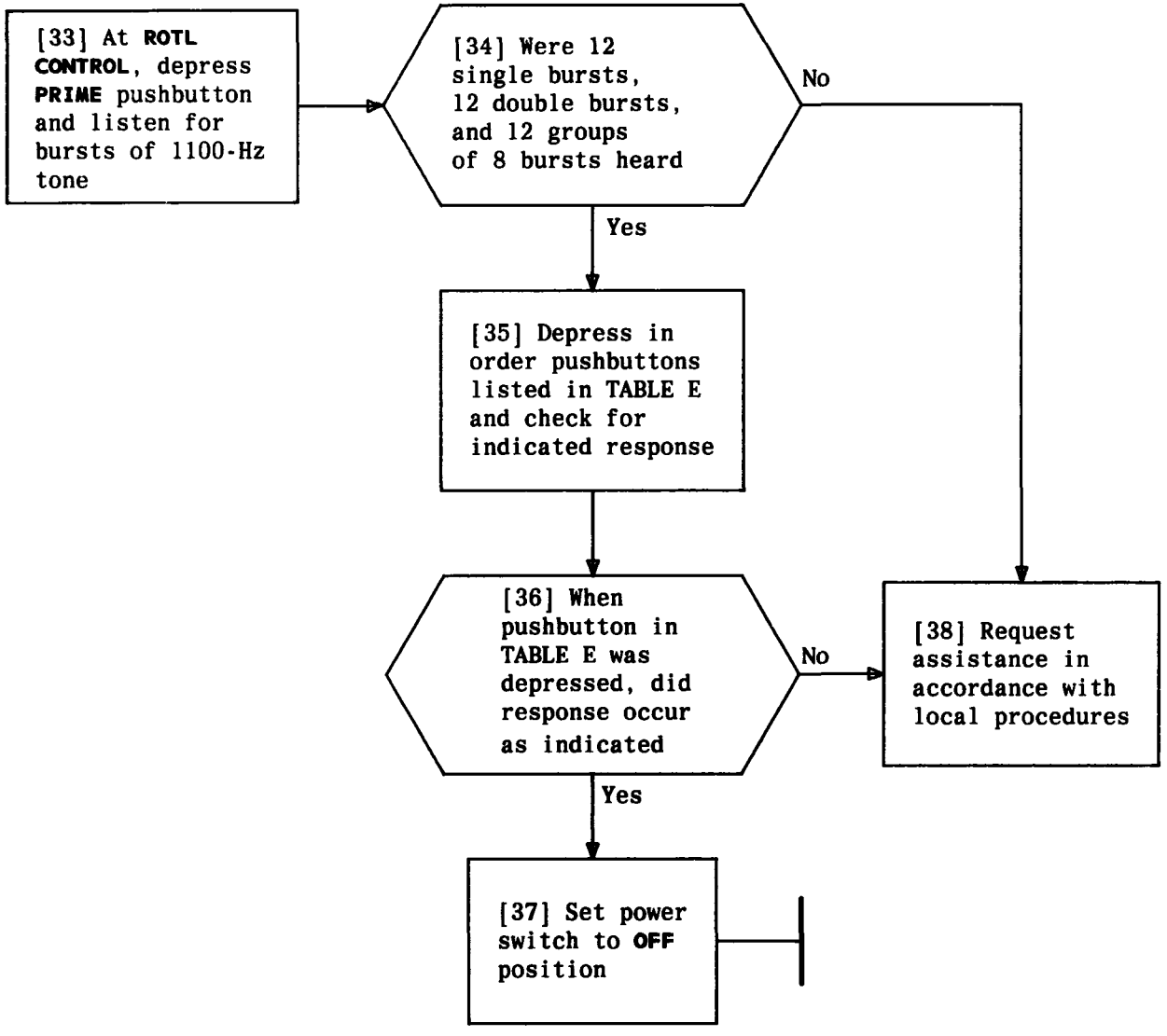

TABLE E	
PUSHBUTTON DEPRESSED	RESPONSE
–RECY/–DAT	Tone heard as long as key is depressed
103TL RFWD	Tone burst heard
RST	None
PRIMING FIELD 1	DATA DISPLAY blank
PRIMING FIELD 2	DATA DISPLAY blank
PRIMING FIELD 3	DATA DISPLAY blank

PERFORM 92A CONTROL UNIT SELF-TESTS

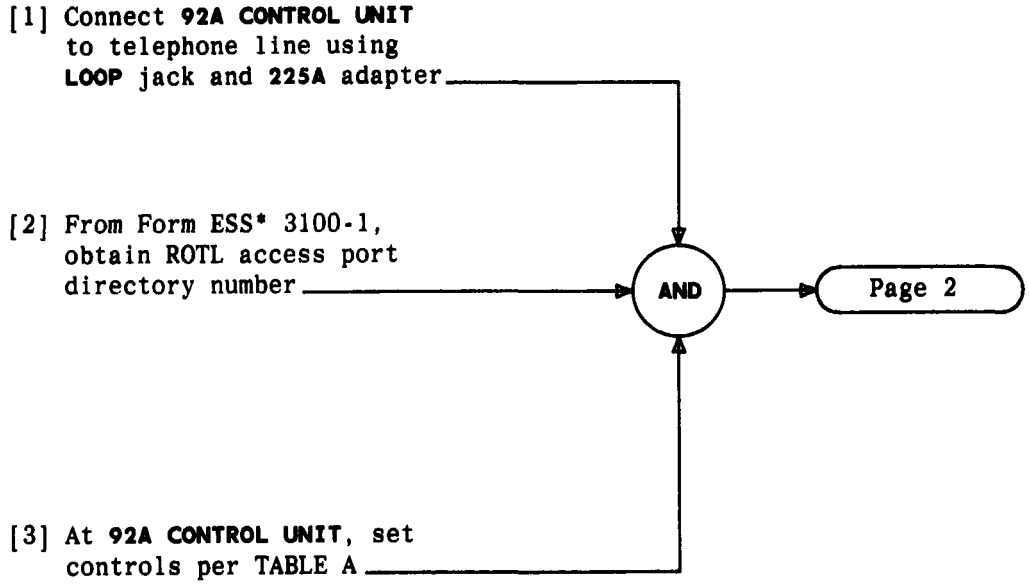

TABLE A	
CONTROL	SETTING
TOUCH TONE/DIAL PULSE	Type line used to access ROTL
ON HOOK/OFF HOOK	ON HOOK
T PADS	Off
MONITOR	LOOP
MBO/NORM	NORM
SMALL/EXP	EXP
AUTO/MAN	AUTO
MEAS/SC	MEAS
600/900	900
TP0/TP2	TP0
VOLUME	Midrange
POWER	ON

* Trademark of Western Electric

ACCESS REMOTE OFFICE TEST LINE (ROTL) PORT USING 92A CONTROL UNIT

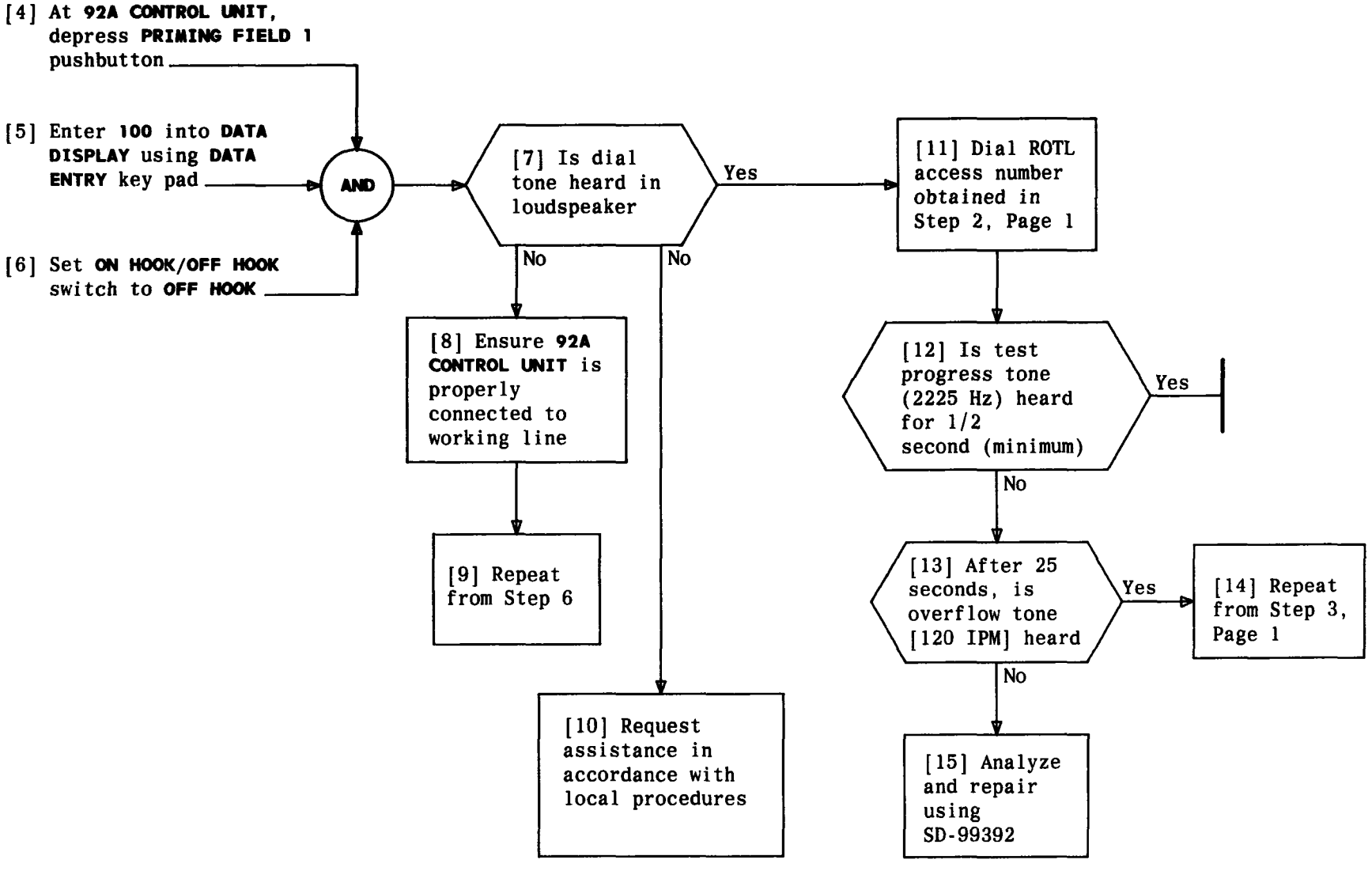

ACCESS REMOTE OFFICE TEST LINE (ROTL) PORT USING 92A CONTROL UNIT

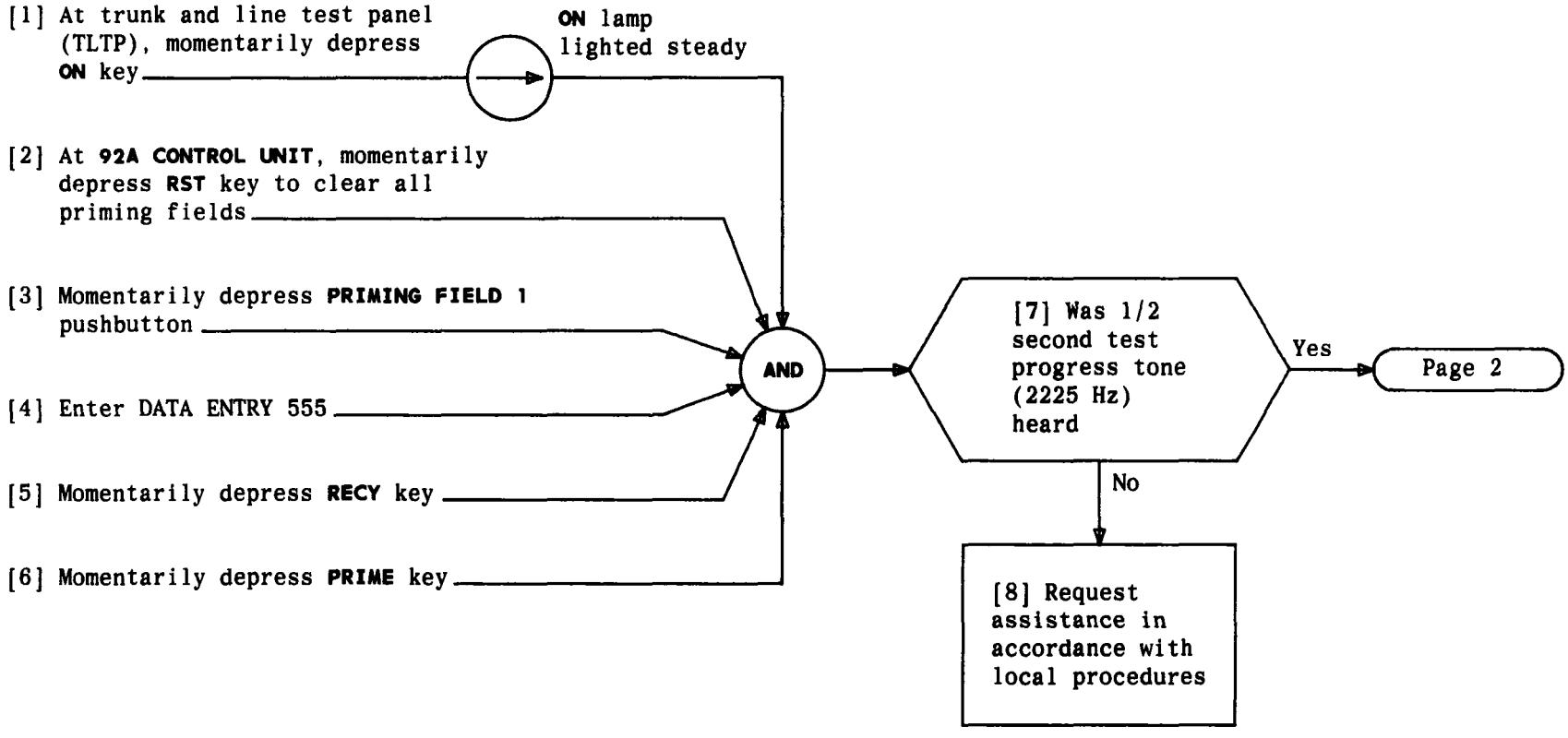

MAKE SECURITY CALLBACK UNLOCK REQUEST USING 92A CONTROL UNIT

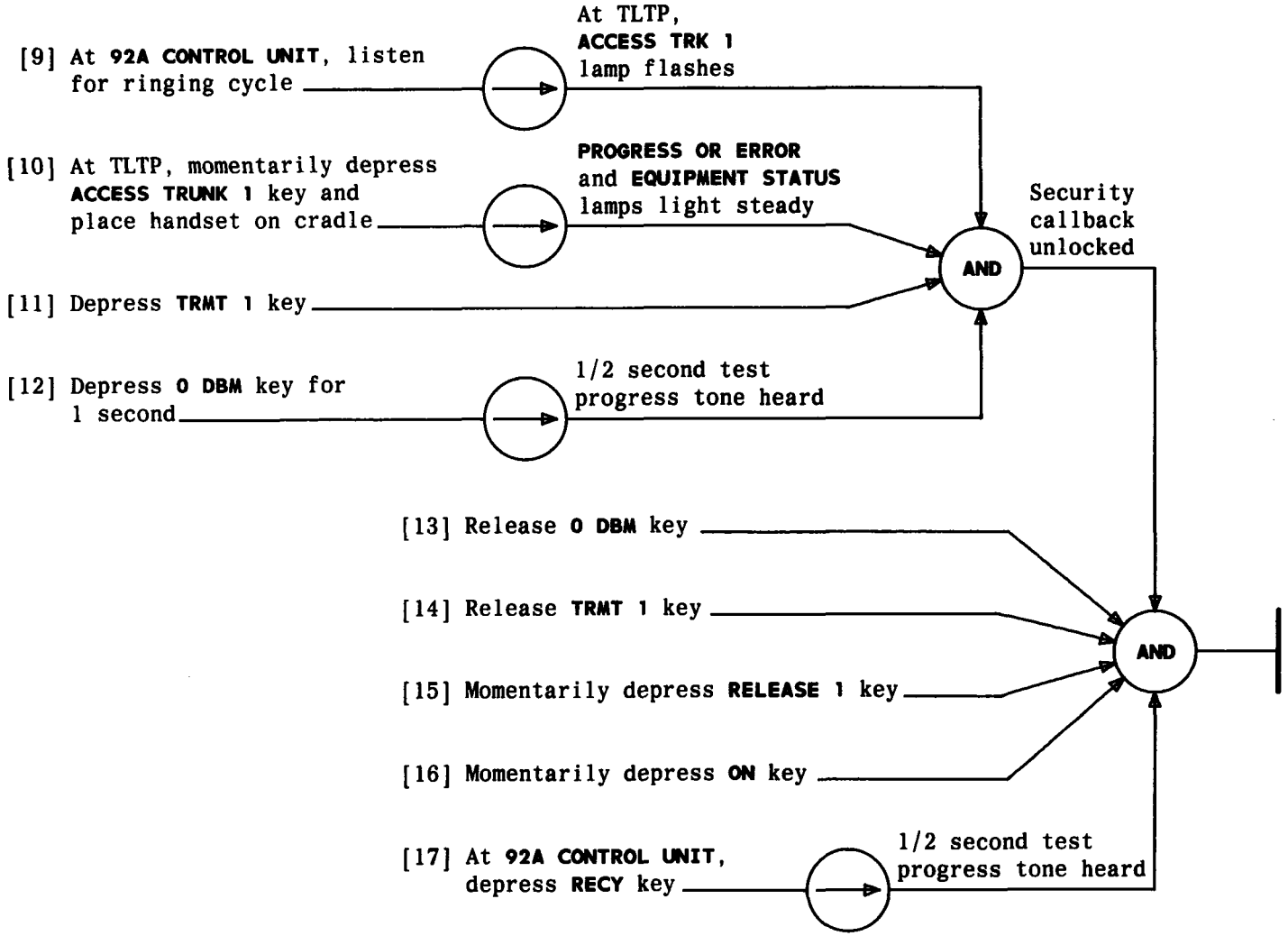

MAKE SECURITY CALLBACK UNLOCK REQUEST USING 92A CONTROL UNIT

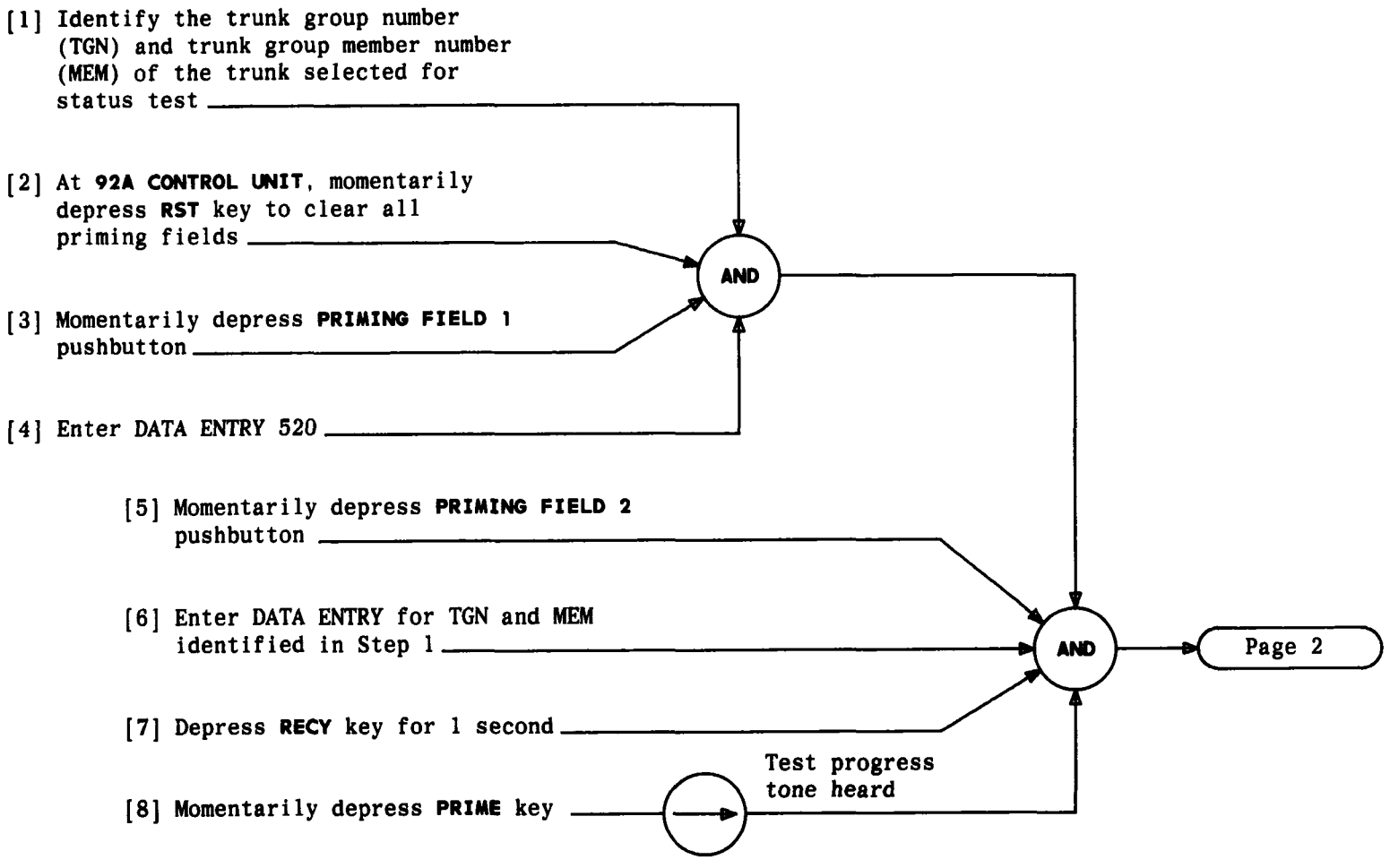

MAKE TRUNK STATUS REQUEST USING 92A CONTROL UNIT

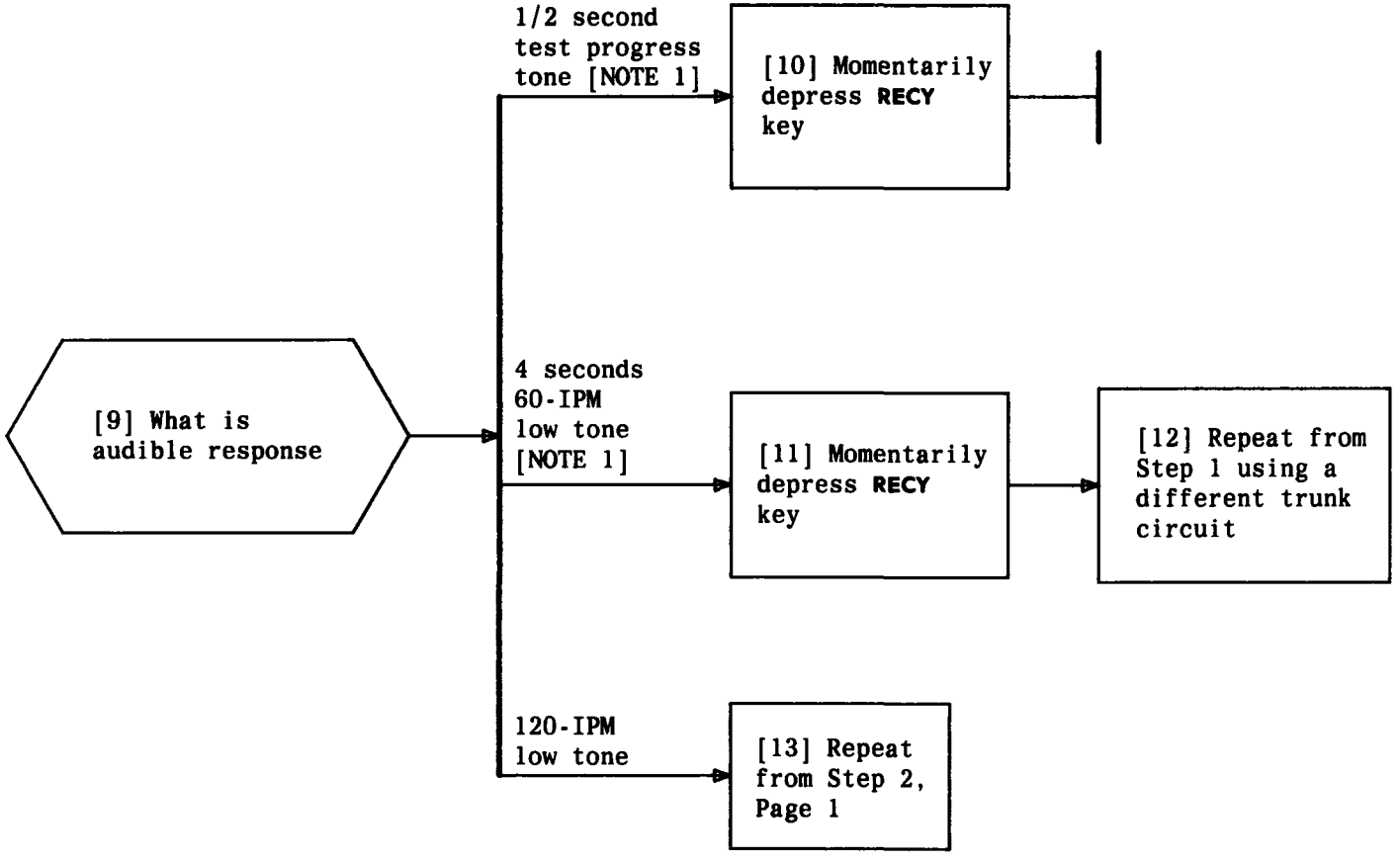

NOTE 1
One-half second test progress tone indicates trunk is idle. Four seconds of 60 IPM indicates trunk is busy

MAKE TRUNK STATUS REQUEST USING 92A CONTROL UNIT

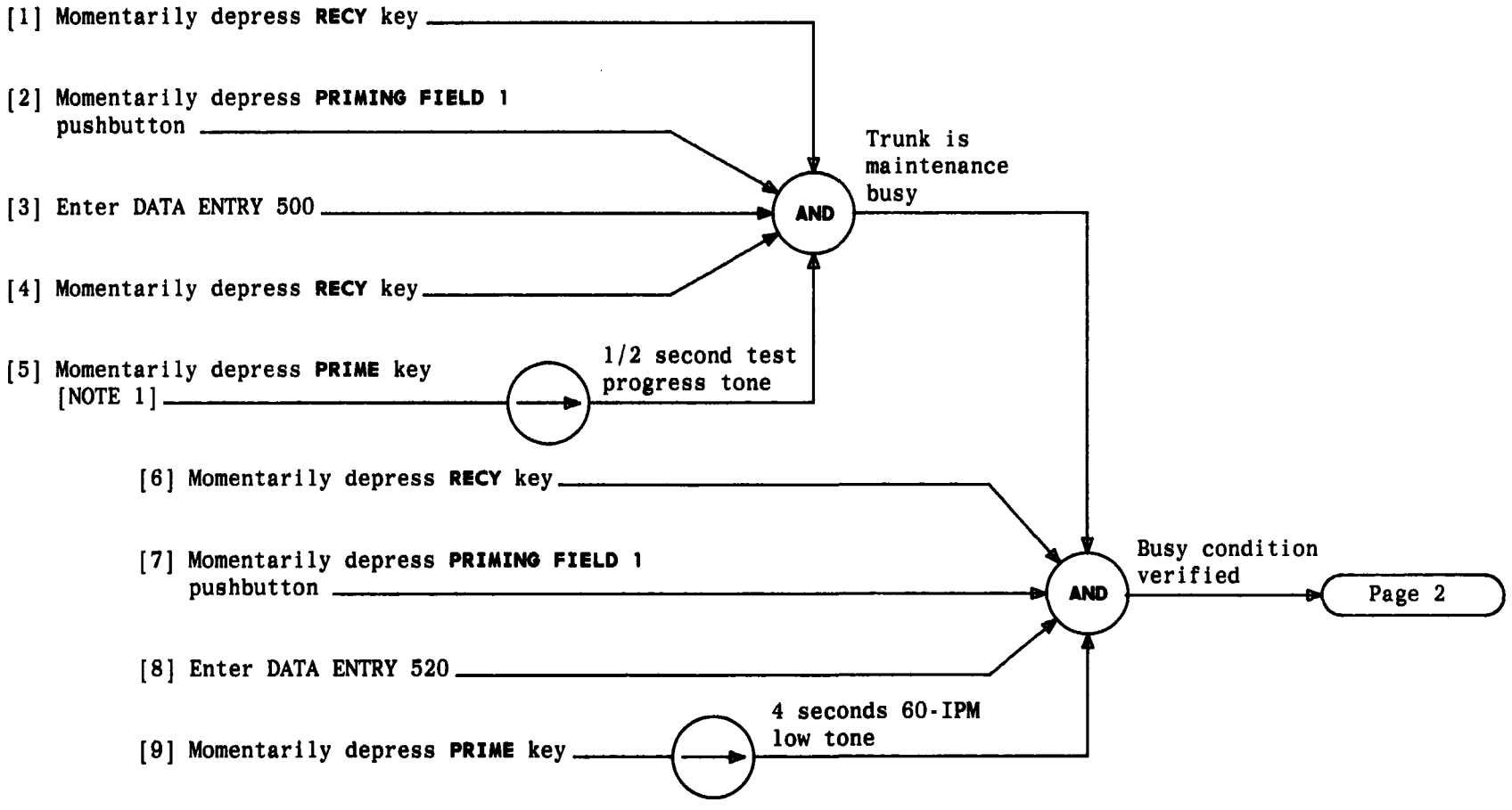

NOTE 1
After release of **PRIME** key, maintenance TTY prints:
RMV TRK *a b* ROTL LKD

MAKE BUSY AND RESTORE TRUNK CIRCUIT USING 92A CONTROL UNIT

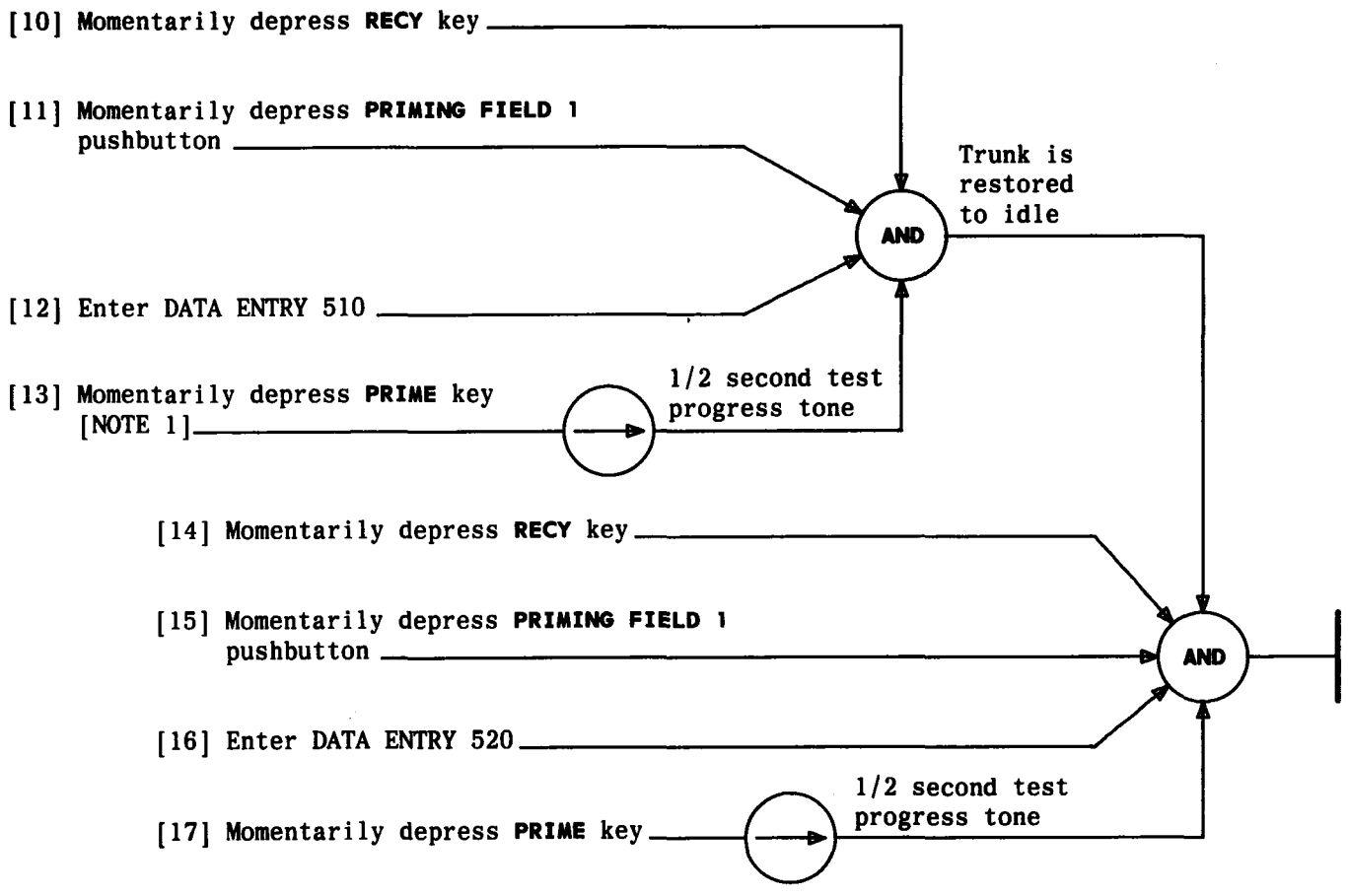

NOTE 1
After release of **PRIME** key, maintenance TTY prints:
RST TRK *a b* ROTL

MAKE BUSY AND RESTORE TRUNK CIRCUIT USING 92A CONTROL UNIT

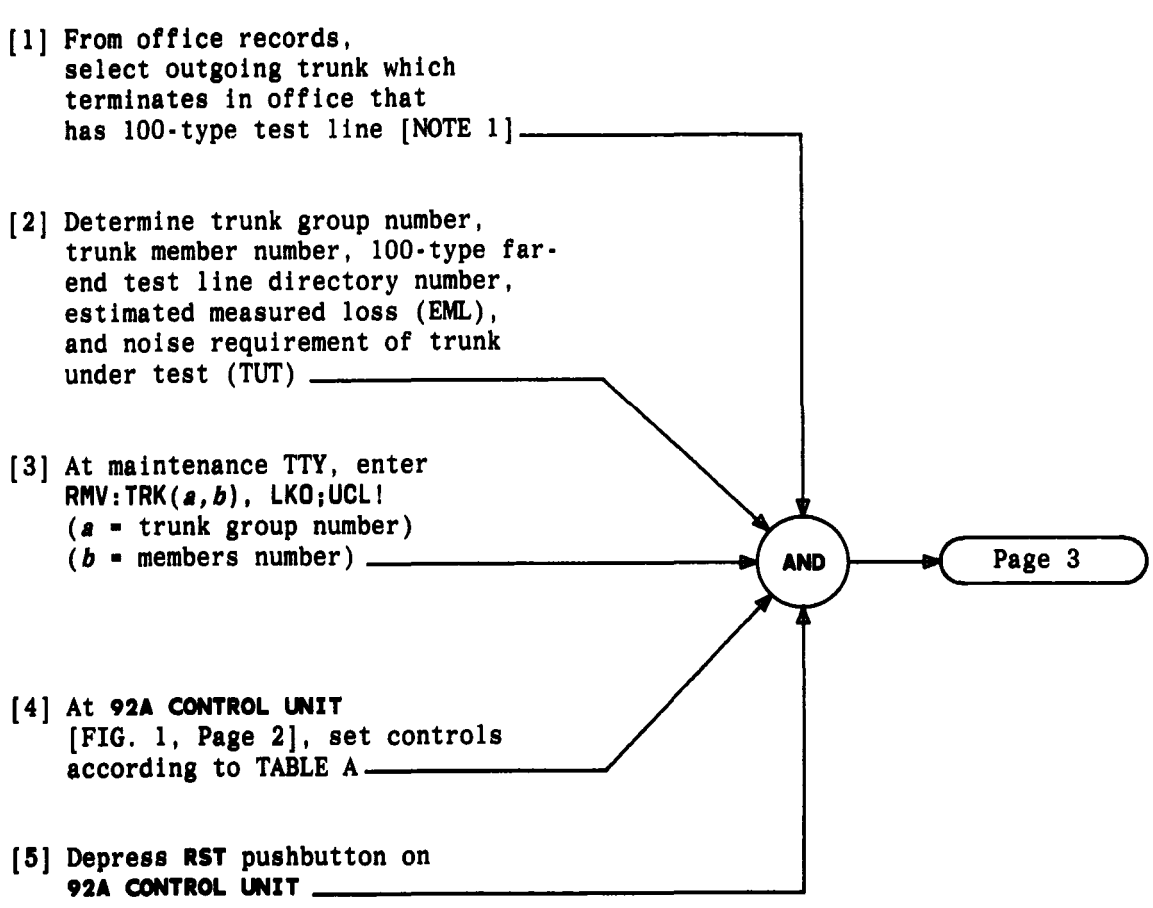

TABLE A	
SWITCH	POSITION
TOUCH TONE/DIAL PULSE	Type line used to access ROTL
ON HOOK/OFF HOOK	ON HOOK
T PADS	Off
MONITOR	LOOP
MBO/NORM	NORM
SMALL/EXP	EXP
AUTO/MAN	AUTO
MEAS/SC	MEAS
VOLUME	Midrange
POWER	ON
900/600	900
TPO/TP2	TPO

NOTE 1
A 100-type test line sends 1000-Hz 0-dBm tone for 10 seconds, then connects balance termination

TEST REMOTE OFFICE TEST LINE (ROTL) USING 92A CONTROL UNIT — 100-TYPE TEST LINE AT FAR END

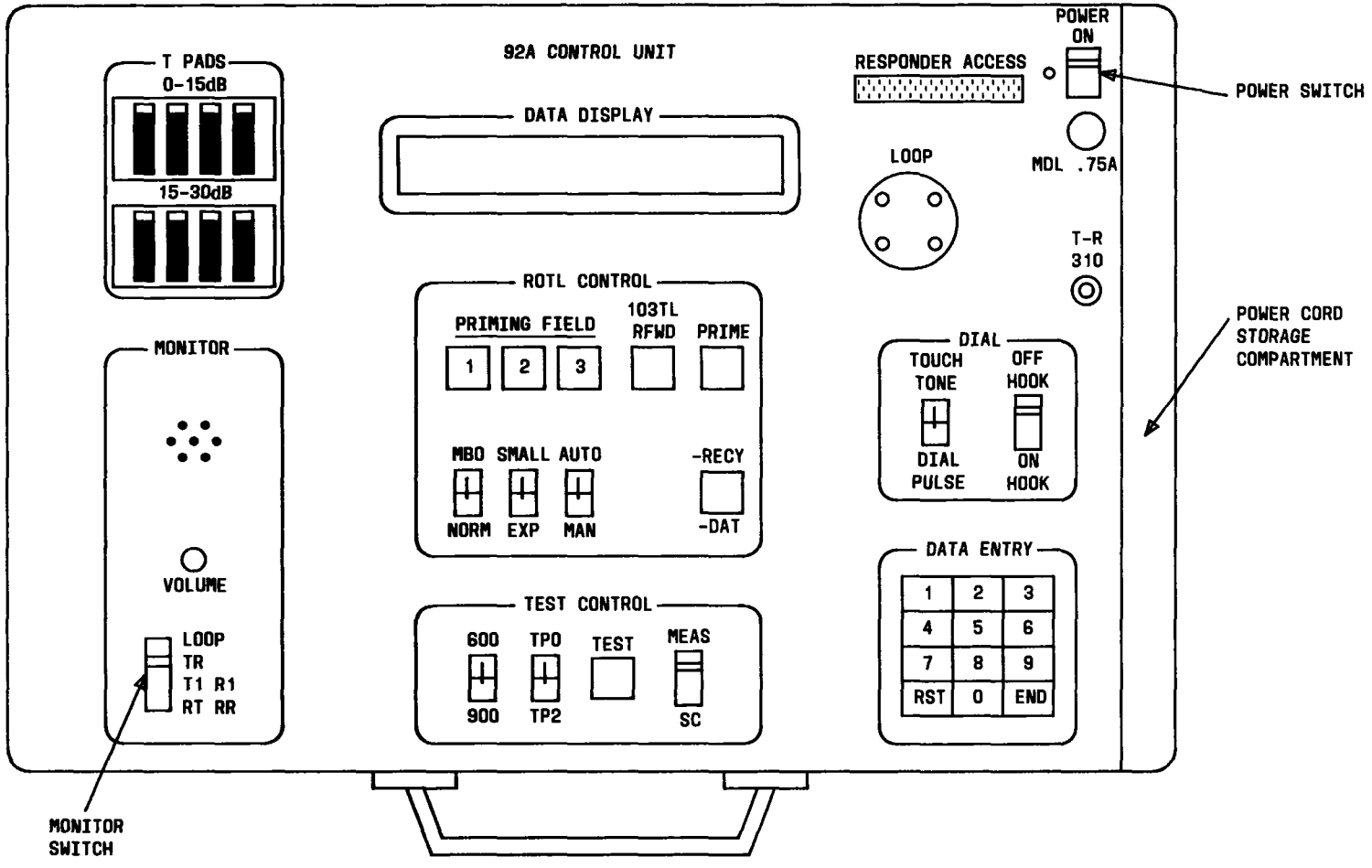

FIG. 1 – 92A Control Unit

TEST REMOTE OFFICE TEST LINE (ROTL) USING 92A CONTROL UNIT – 100-TYPE TEST LINE AT FAR END

At **92A** control unit:

[6] Depress **PRIMING FIELD 1** pushbutton

[7] Enter **100** into **DATA DISPLAY** using **DATA ENTRY** key pads

[8] Depress **PRIMING FIELD 2** pushbutton

[9] Enter trunk group and member number into **DATA DISPLAY** using **DATA ENTRY** key pad

[10] Depress **PRIMING FIELD 3** pushbutton

[11] From route index expansion table (ESS* Form 3303), determine digits to delete from or prefix to test line number

[12] Enter only those digits to be outpulsed to far-end test line into **DATA DISPLAY** using **DATA ENTRY** key pad

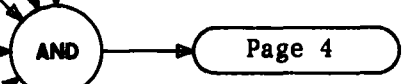

* Trademark of Western Electric

TEST REMOTE OFFICE TEST LINE (ROTL) USING 92A CONTROL UNIT — 100-TYPE TEST LINE AT FAR END

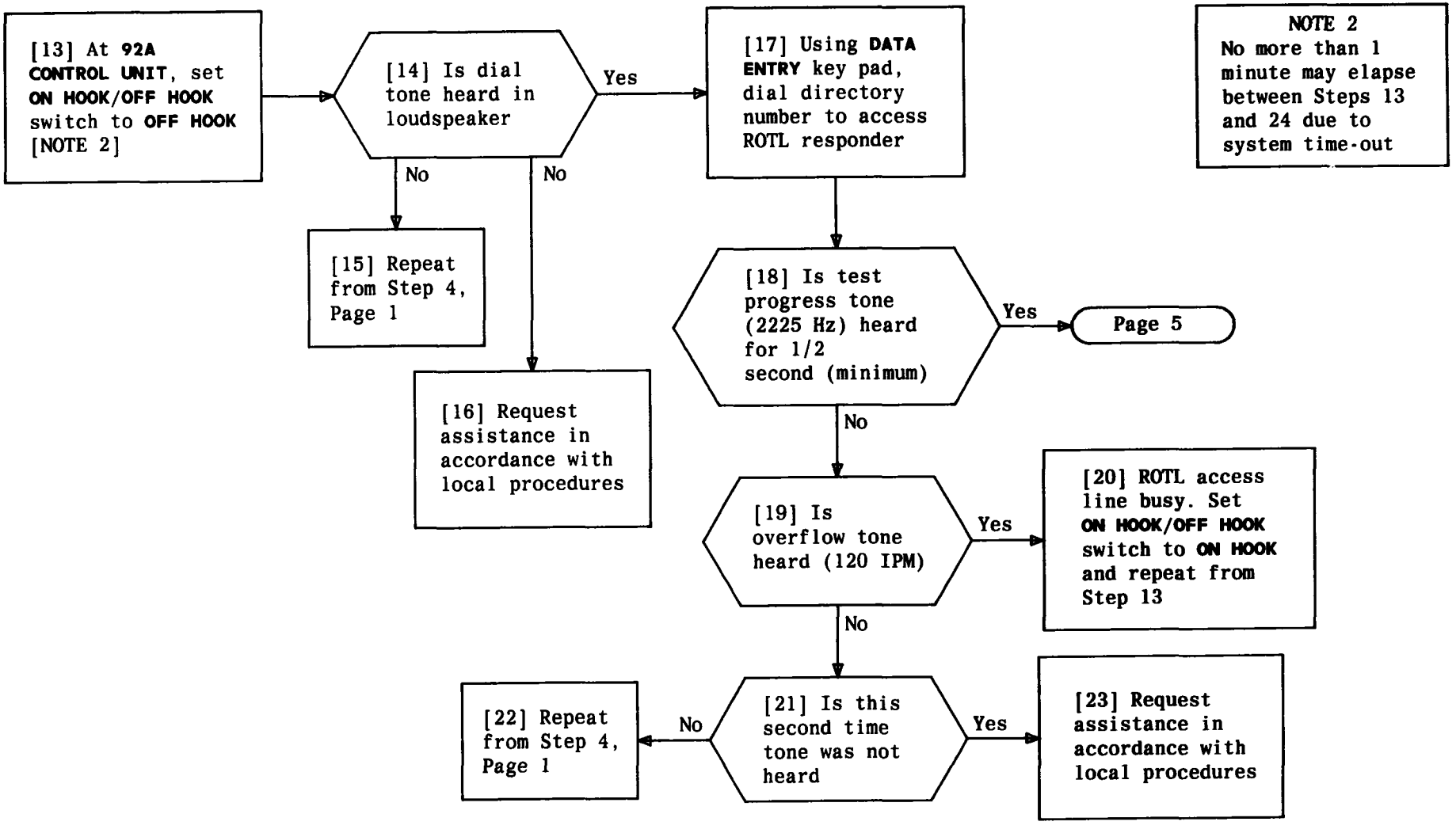

TEST REMOTE OFFICE TEST LINE (ROTL) USING 92A CONTROL UNIT — 100-TYPE TEST LINE AT FAR END

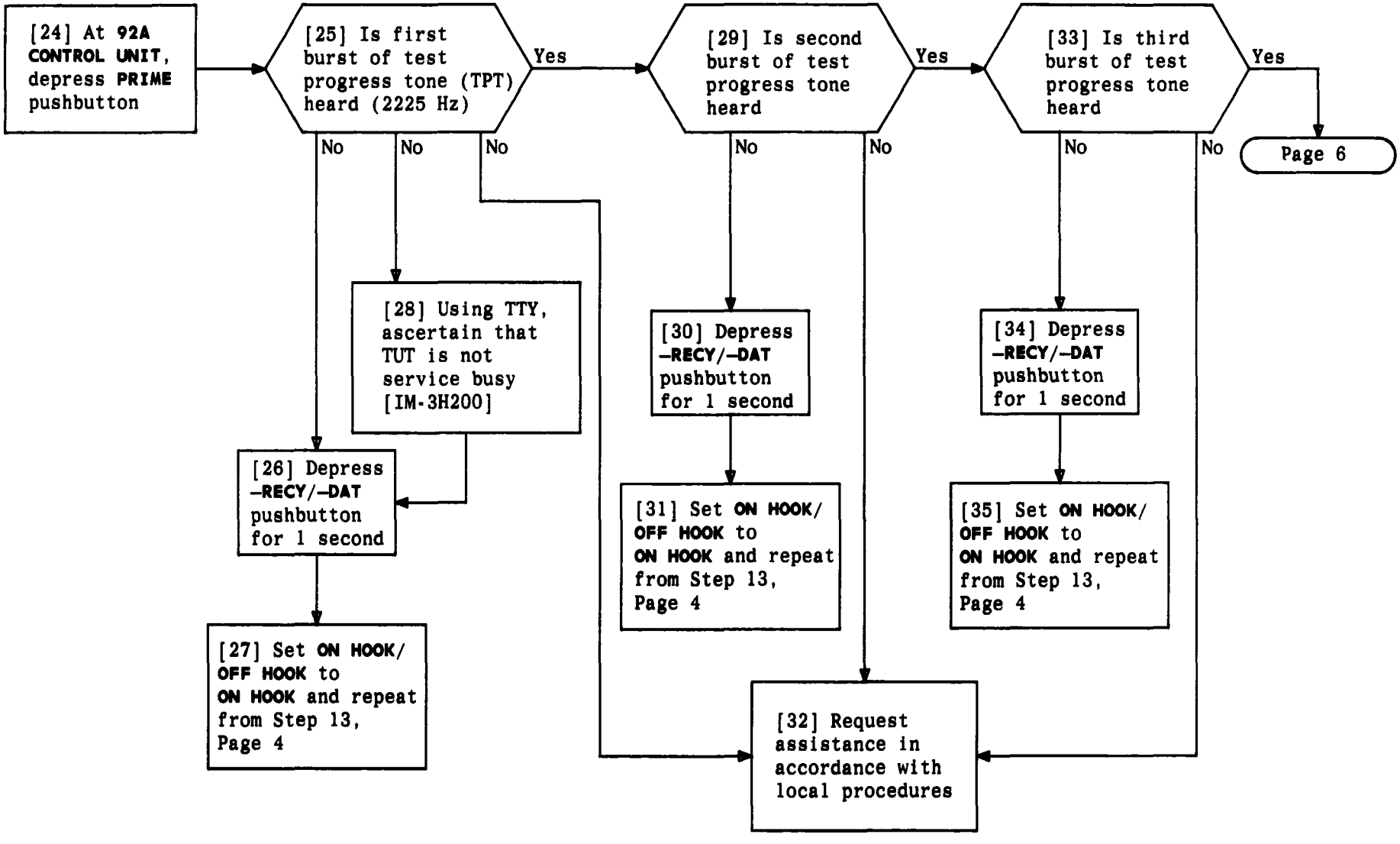

TEST REMOTE OFFICE TEST LINE (ROTL) USING 92A CONTROL UNIT — 100-TYPE TEST LINE AT FAR END

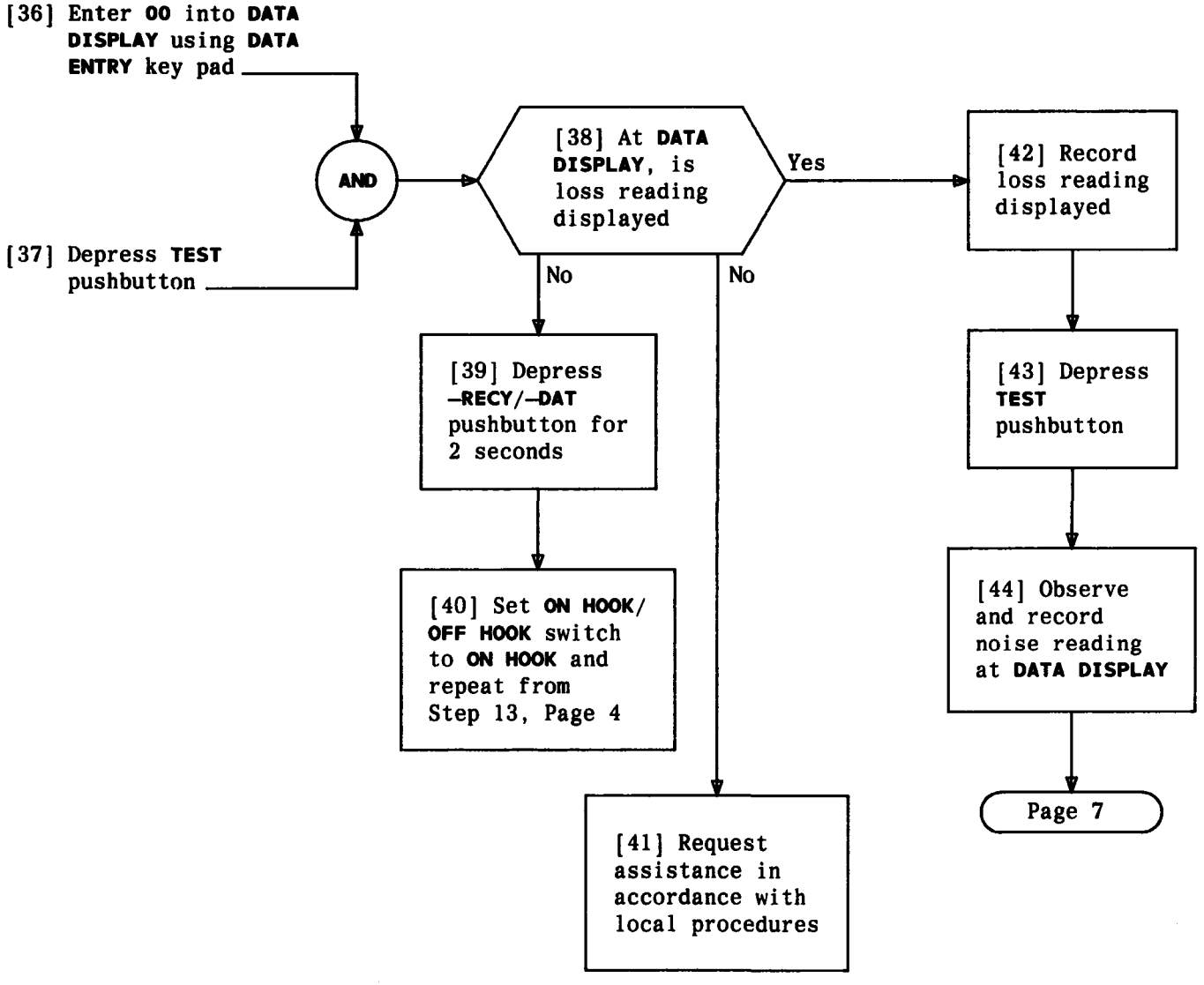

TEST REMOTE OFFICE TEST LINE (ROTL) USING 92A CONTROL UNIT – 100-TYPE TEST LINE AT FAR END

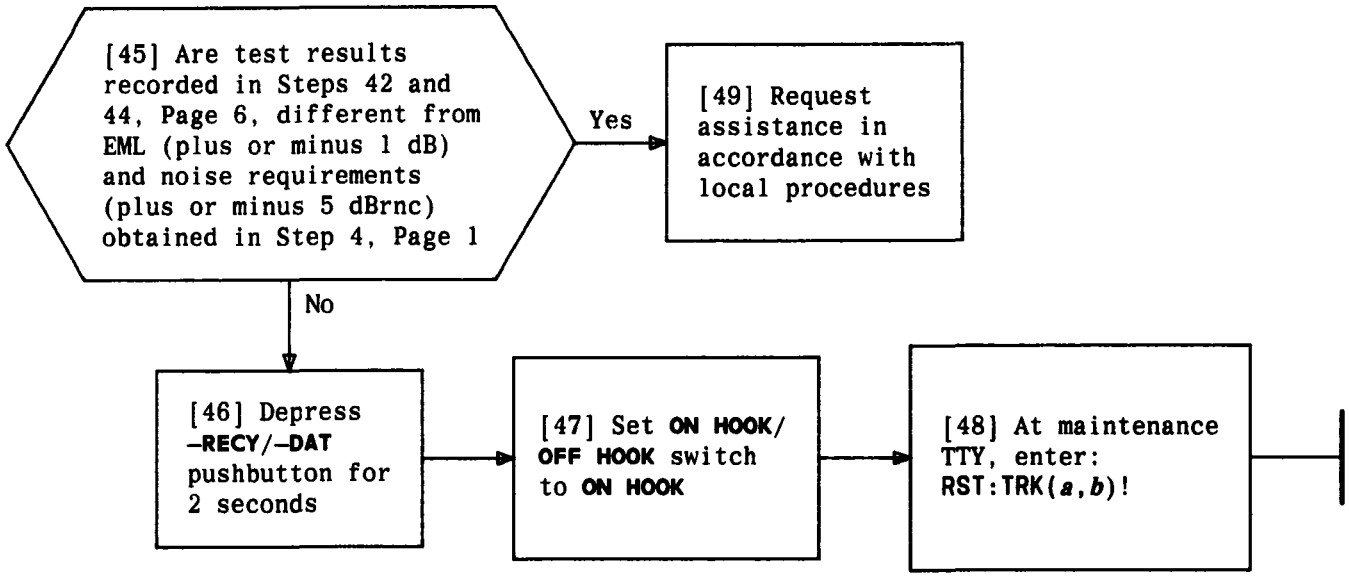

TEST REMOTE OFFICE TEST LINE (ROTL) USING 92A CONTROL UNIT – 100-TYPE TEST LINE AT FAR END

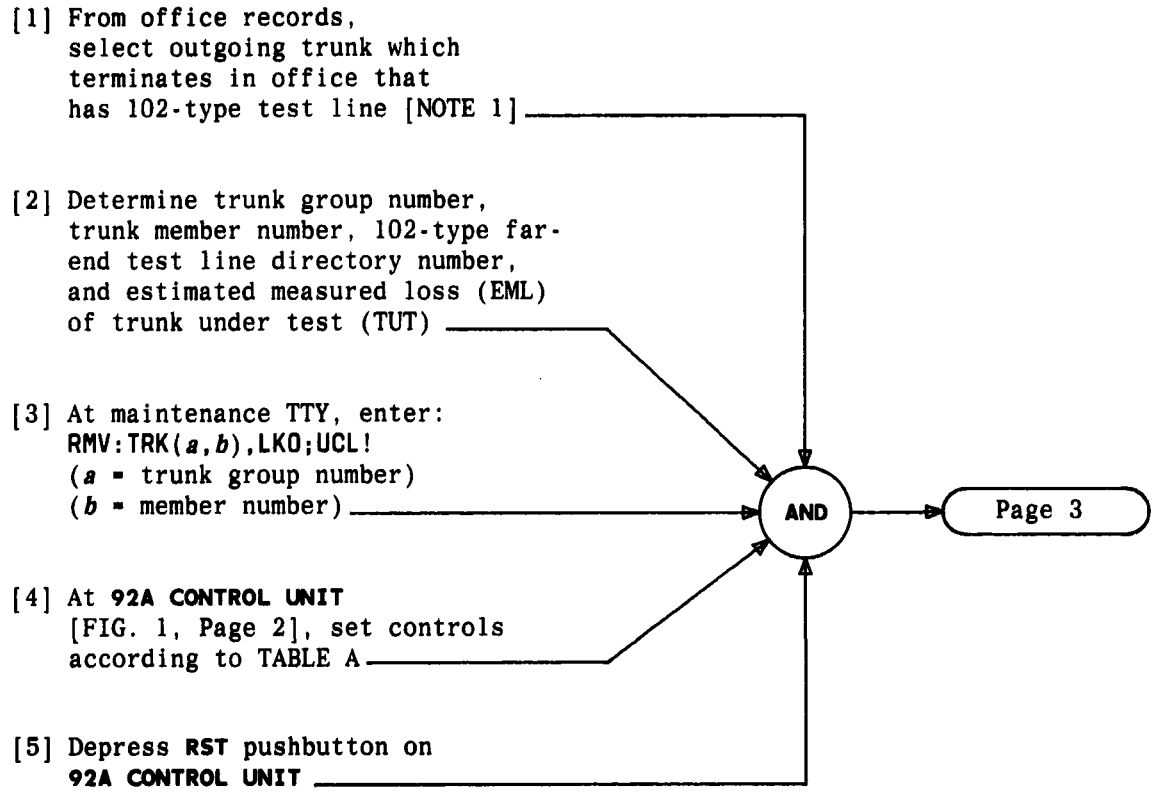

TABLE A	
CONTROL	POSITION
TOUCH TONE/DIAL PULSE	Type line used to access ROTL
ON HOOK/OFF HOOK	ON HOOK
T PADS	Off
MONITOR	LOOP
MBO/NORM	NORM
SMALL/EXP	EXP
AUTO/MAN	AUTO
MEAS/SC	MEAS
VOLUME	Midrange
POWER	ON
900/600	900
TP0/TP2	TP0

NOTE 1
A 102-type test line sends 1000-Hz 0-dBm tone for 9 seconds followed by 1 second of on-hook balance termination repeated continuously

TEST REMOTE OFFICE TEST LINE (ROTL) USING 92A CONTROL UNIT — 102-TYPE TEST LINE AT FAR END

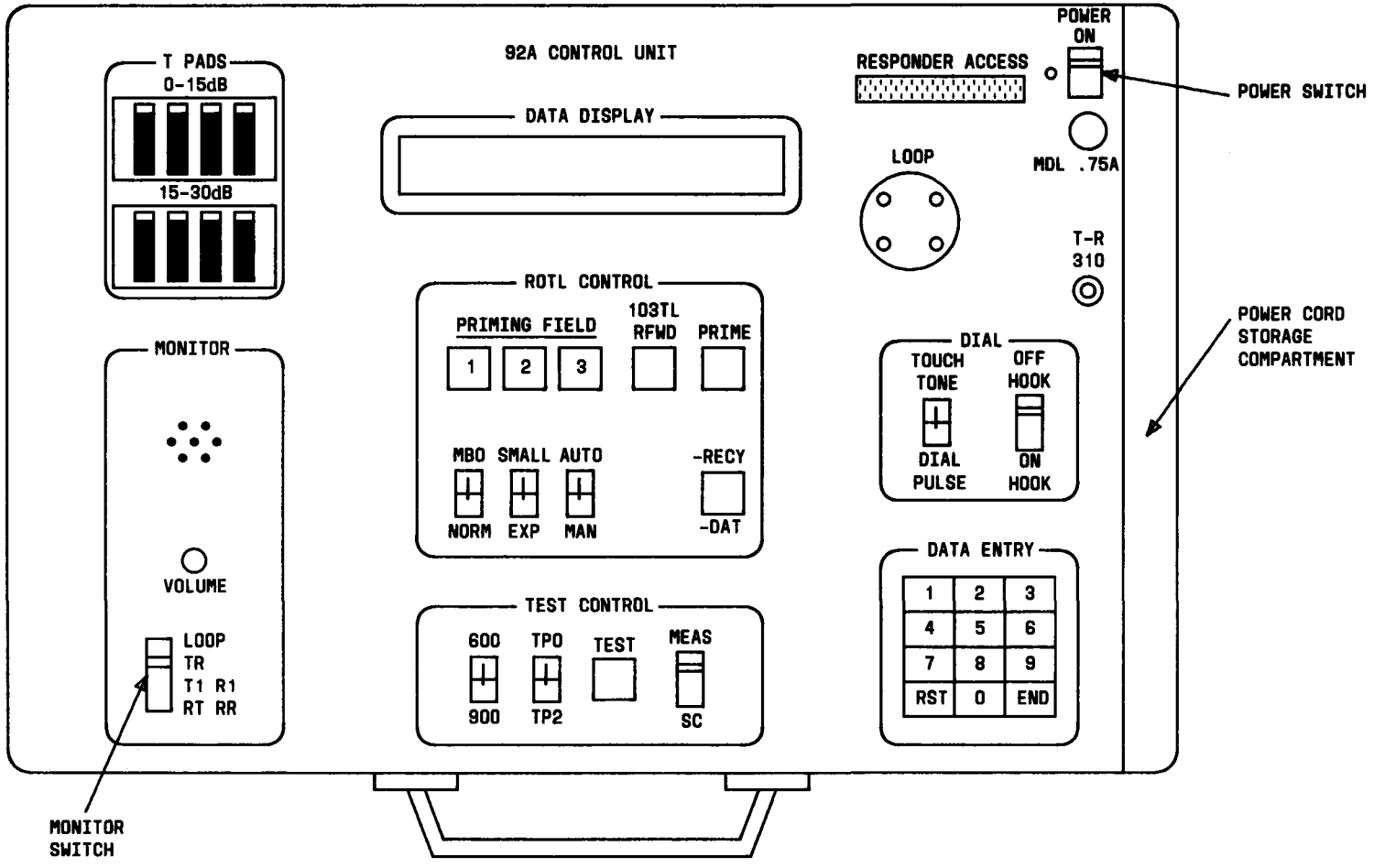

FIG. 1 – 92A Control Unit

TEST REMOTE OFFICE TEST LINE (ROTL) USING 92A CONTROL UNIT – 102-TYPE TEST LINE AT FAR END

At **92A CONTROL UNIT**:

[6] Depress **PRIMING FIELD 1** pushbutton

[7] Enter **120** into **DATA DISPLAY** using **DATA ENTRY** key pads

[8] Depress **PRIMING FIELD 2** pushbutton

[9] Enter trunk group and member number into **DATA DISPLAY** using **DATA ENTRY** key pad

[10] Depress **PRIMING FIELD 3** pushbutton

[11] From route index expansion table (ESS* Form 3303), determine digits to delete from or prefix to test line number

[12] Enter only those digits to be outpulsed to far-end test line into **DATA DISPLAY** using **DATA ENTRY** key pad

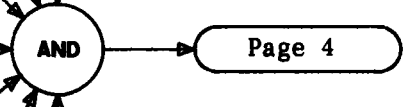

* Trademark of Western Electric

TEST REMOTE OFFICE TEST LINE (ROTL) USING 92A CONTROL UNIT — 102-TYPE TEST LINE AT FAR END

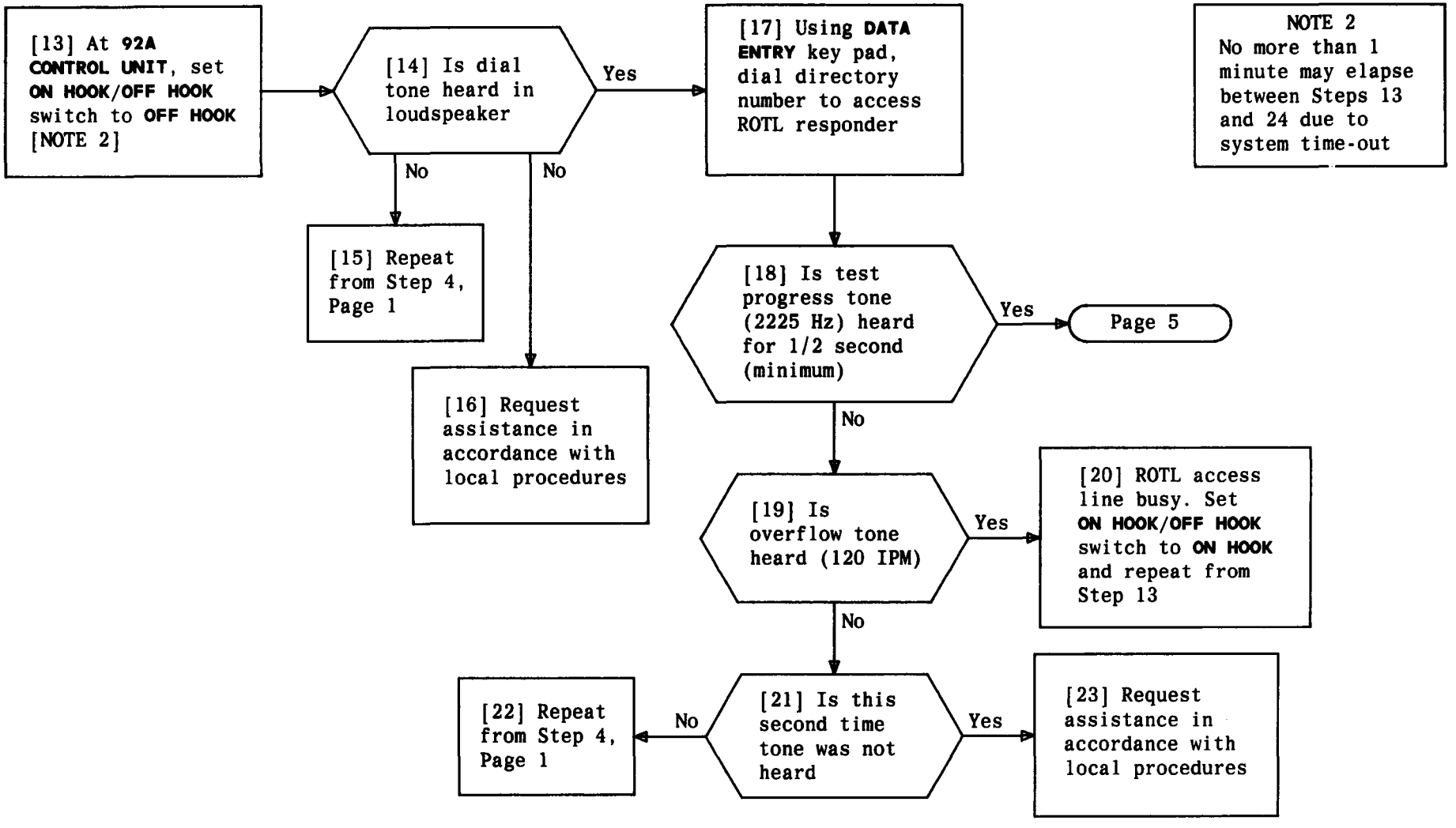

TEST REMOTE OFFICE TEST LINE (ROTL) USING 92A CONTROL UNIT — 102-TYPE TEST LINE AT FAR END

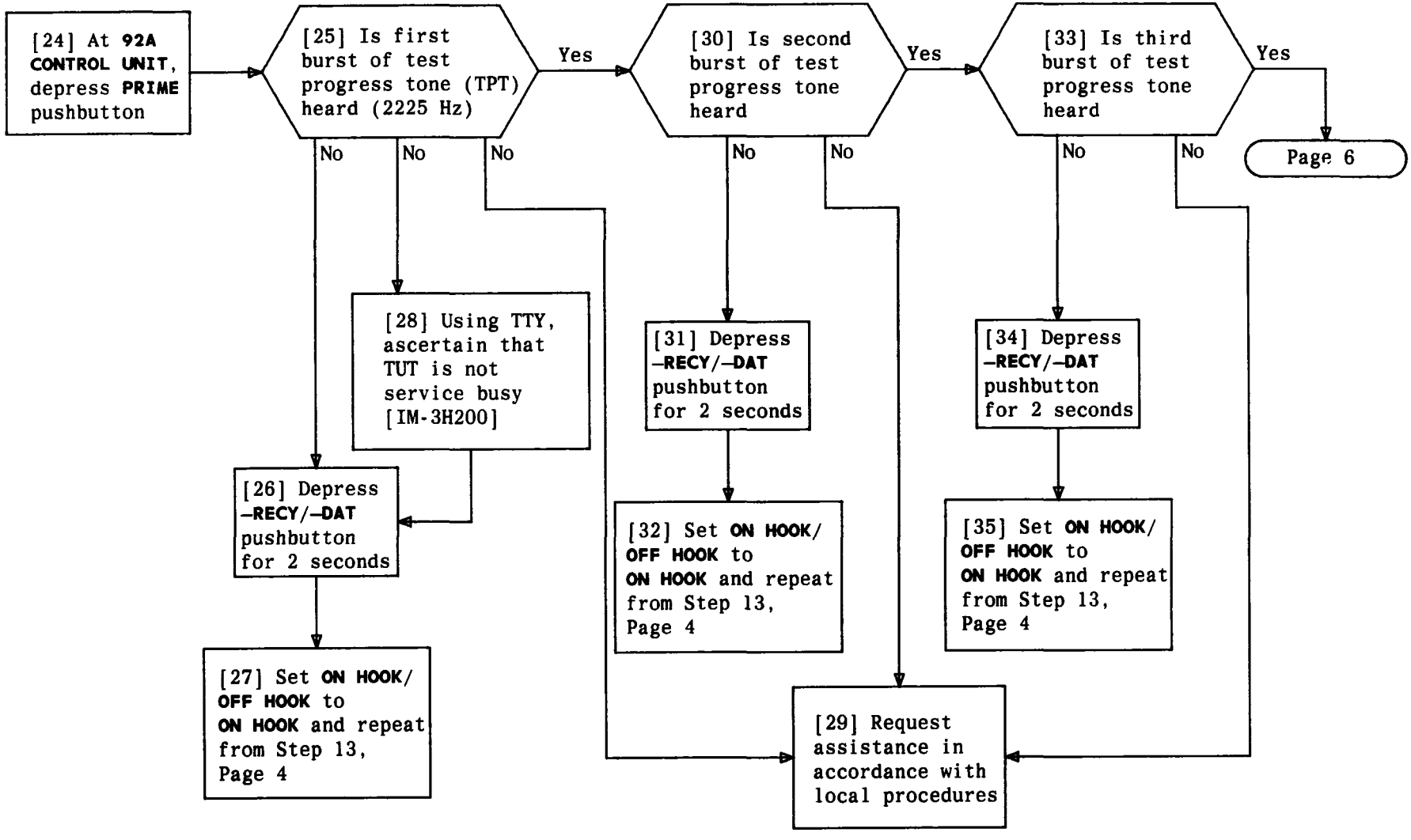

TEST REMOTE OFFICE TEST LINE (ROTL) USING 92A CONTROL UNIT — 102-TYPE TEST LINE AT FAR END

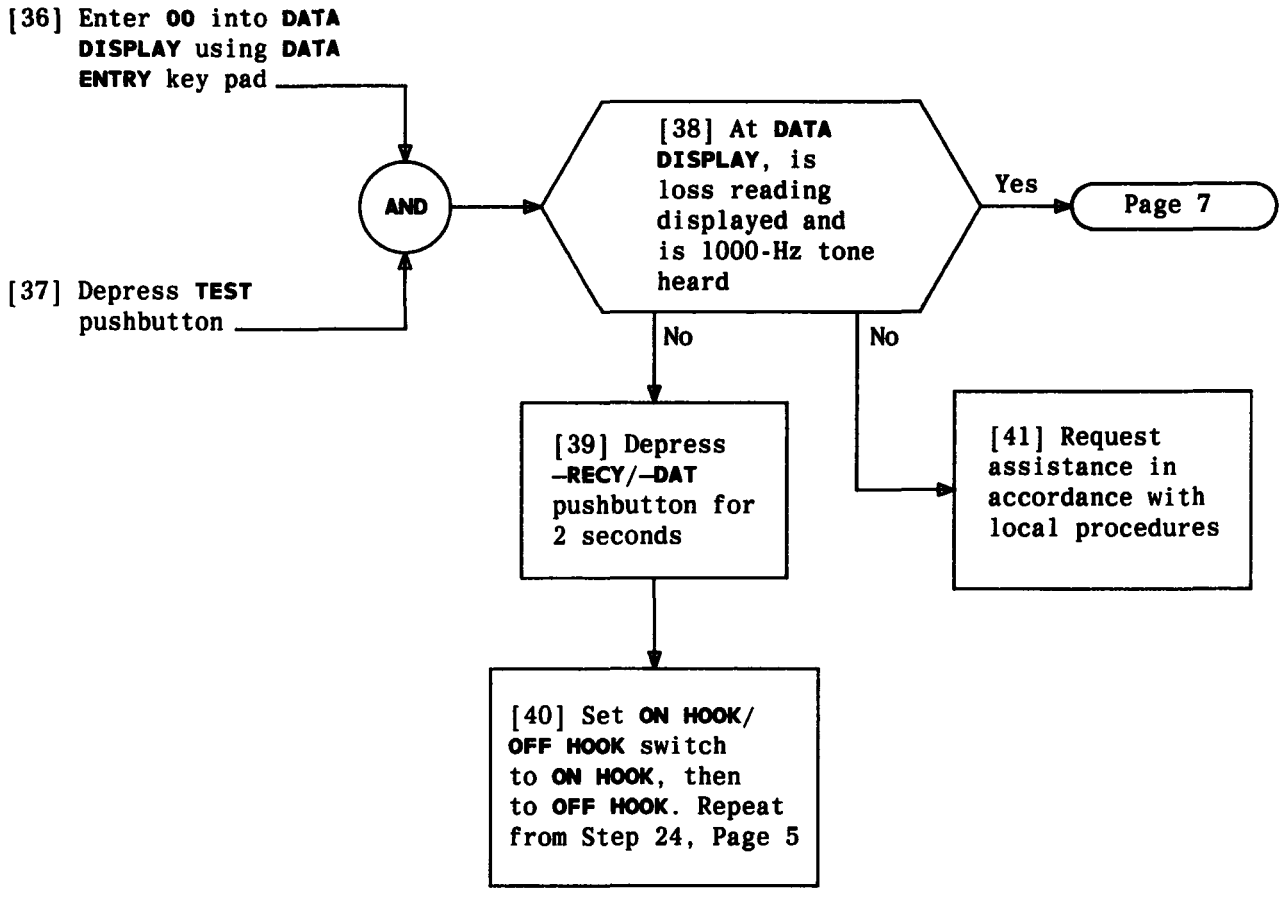

TEST REMOTE OFFICE TEST LINE (ROTL) USING 92A CONTROL UNIT — 102-TYPE TEST LINE AT FAR END

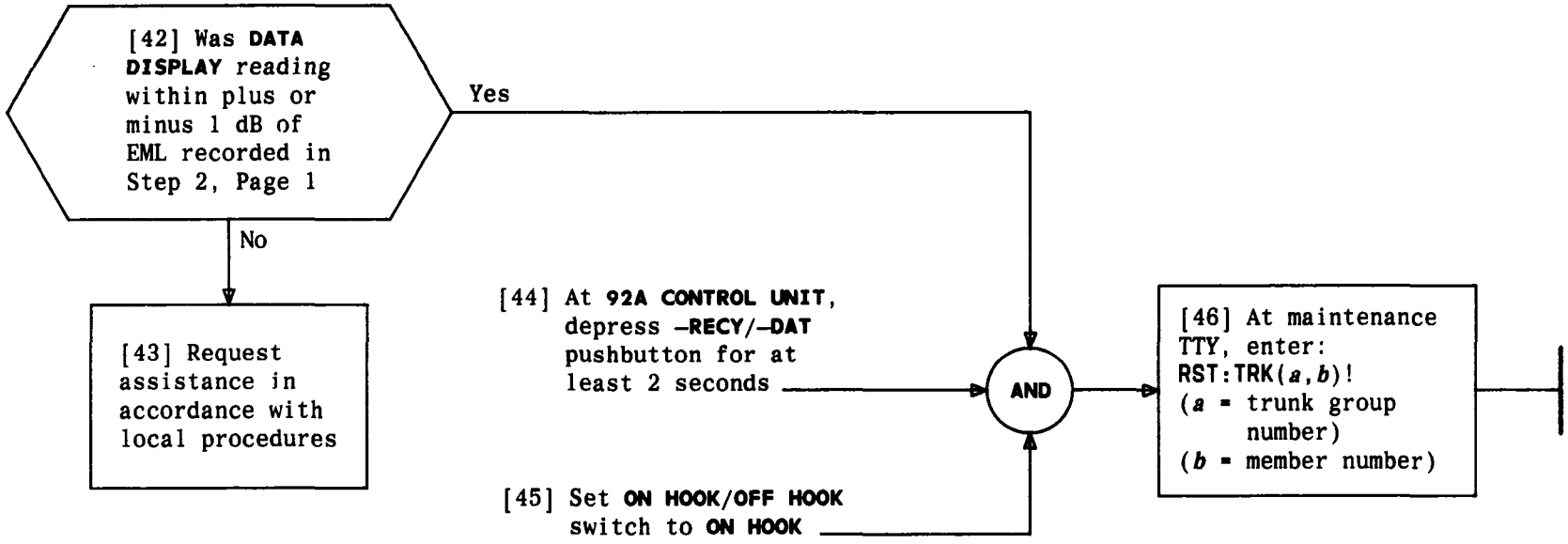

TEST REMOTE OFFICE TEST LINE (ROTL) USING 92A CONTROL UNIT – 102-TYPE TEST LINE AT FAR END

[1] From office records, select outgoing trunk which terminates in office that has 105-type test line [NOTE 1]

[2] Determine trunk group number, trunk member number, 105-type test line directory number, estimated measured loss and noise limit requirement of trunk under test (TUT)

[3] At maintenance TTY, enter:
RMV:TRK(*a*,*b*),LKO;UCL!
(*a* = trunk group number)
(*b* = member number)

[4] At **92A CONTROL UNIT** [FIG. 1, Page 2], set controls according to TABLE A

[5] Depress **RST** pushbutton on **92A CONTROL UNIT**

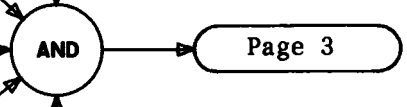

TABLE A	
CONTROL	POSITION
TOUCH TONE/DIAL PULSE	Type line used to access ROTL
ON HOOK/OFF HOOK	ON HOOK
T PADS	Off
MONITOR	LOOP
MBO/NORM	NORM
SMALL/EXP	EXP
AUTO/MAN	AUTO
MEAS/SC	MEAS
VOLUME	Midrange
POWER	ON
900/600	900
TP0/TP2	TP0

NOTE 1
A 105-type test line is a line which enables a **52A** responder to be accessed

TEST REMOTE OFFICE TEST LINE (ROTL) USING 92A CONTROL UNIT — 105-TYPE TEST LINE AT FAR END

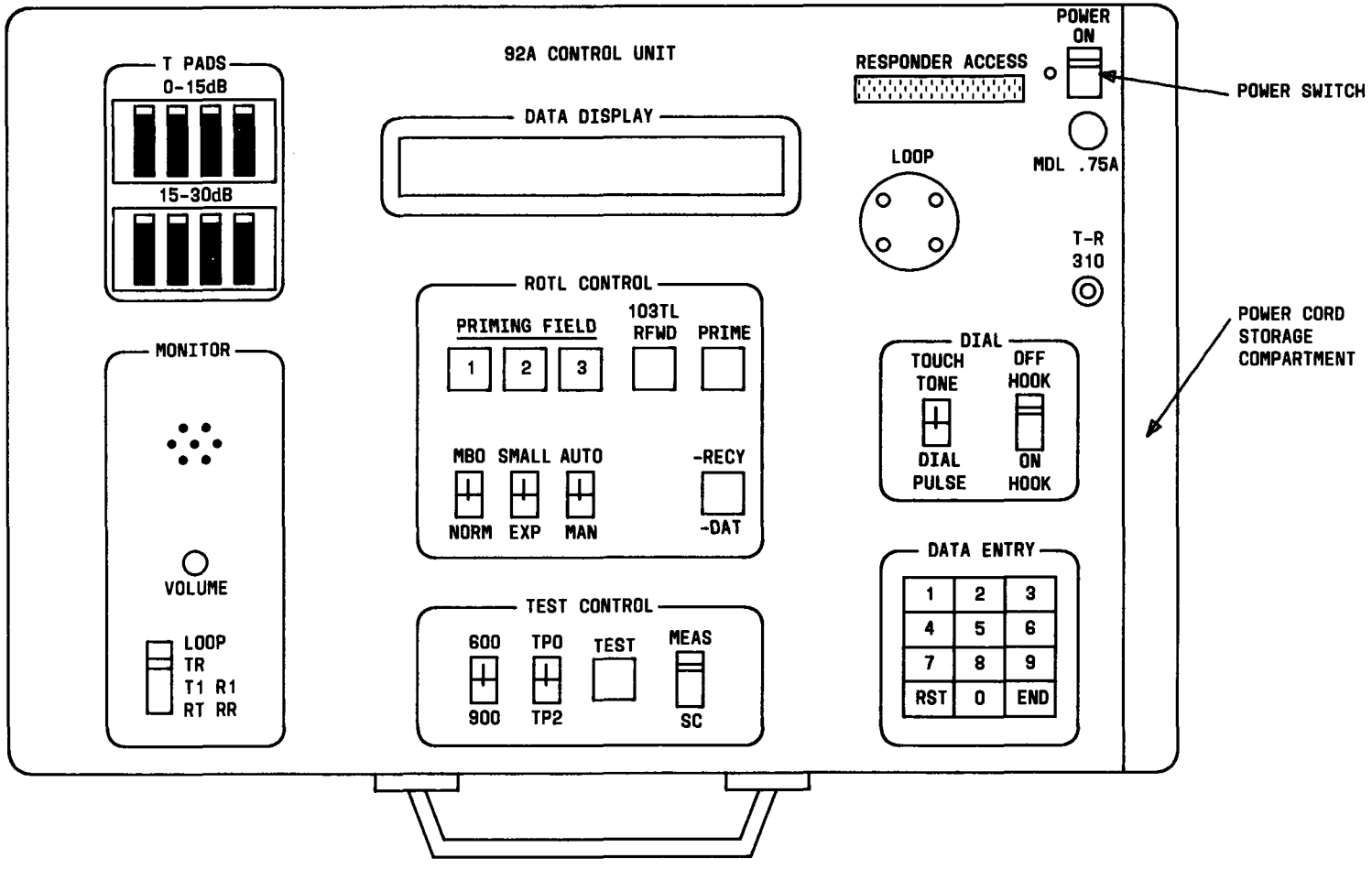

FIG. 1 – 92A Control Unit

TEST REMOTE OFFICE TEST LINE (ROTL) USING 92A CONTROL UNIT – 105-TYPE TEST LINE AT FAR END

At **92A CONTROL UNIT**:

[6] Depress **PRIMING FIELD 1** pushbutton

[7] Enter **150** into **DATA DISPLAY** using **DATA ENTRY** key pads

[8] Depress **PRIMING FIELD 2** pushbutton

[9] Enter trunk group and member number into **DATA DISPLAY** using **DATA ENTRY** key pad

[10] Depress **PRIMING FIELD 3** pushbutton

[11] From route index expansion table (ESS* Form 3303), determine digits to delete from or prefix to test line number

[12] Enter only those digits to be outpulsed to far-end test line into **DATA DISPLAY** using **DATA ENTRY** key pad

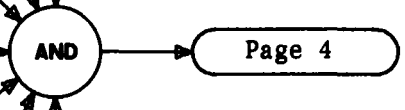

* Trademark of Western Electric

TEST REMOTE OFFICE TEST LINE (ROTL) USING 92A CONTROL UNIT — 105-TYPE TEST LINE AT FAR END

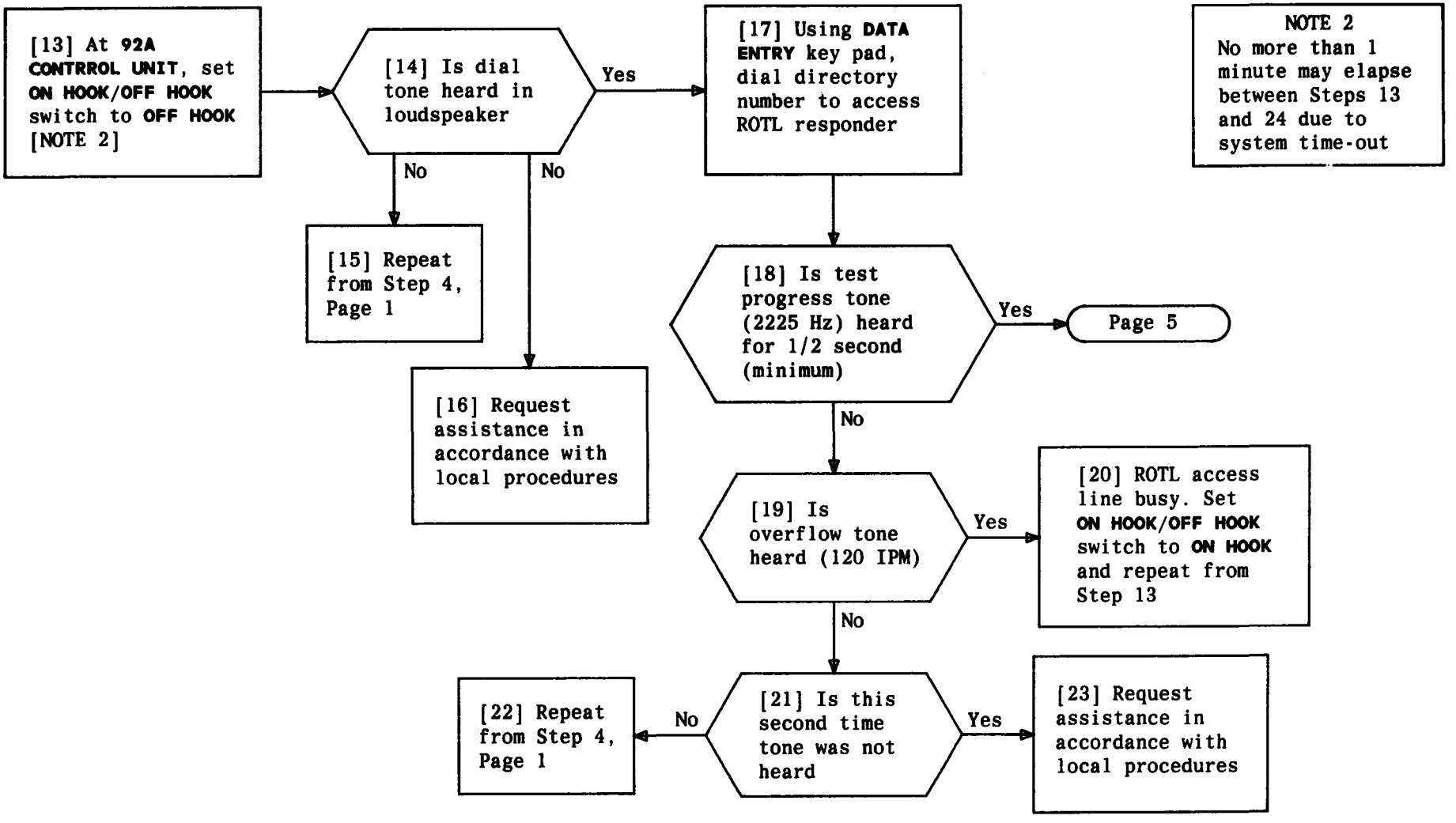

TEST REMOTE OFFICE TEST LINE (ROTL) USING 92A CONTROL UNIT – 105-TYPE TEST LINE AT FAR END

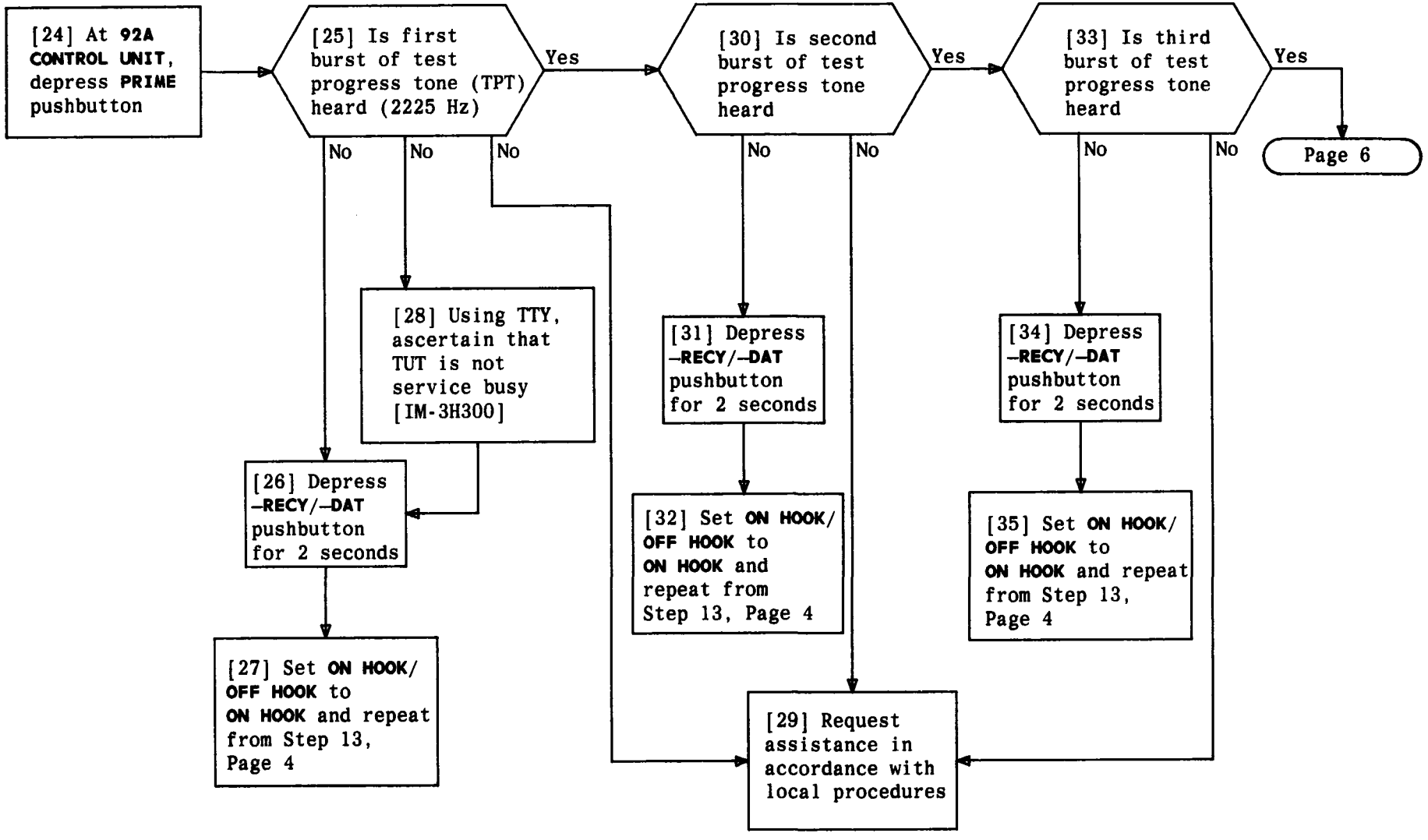

TEST REMOTE OFFICE TEST LINE (ROTL) USING 92A CONTROL UNIT – 105-TYPE TEST LINE AT FAR END

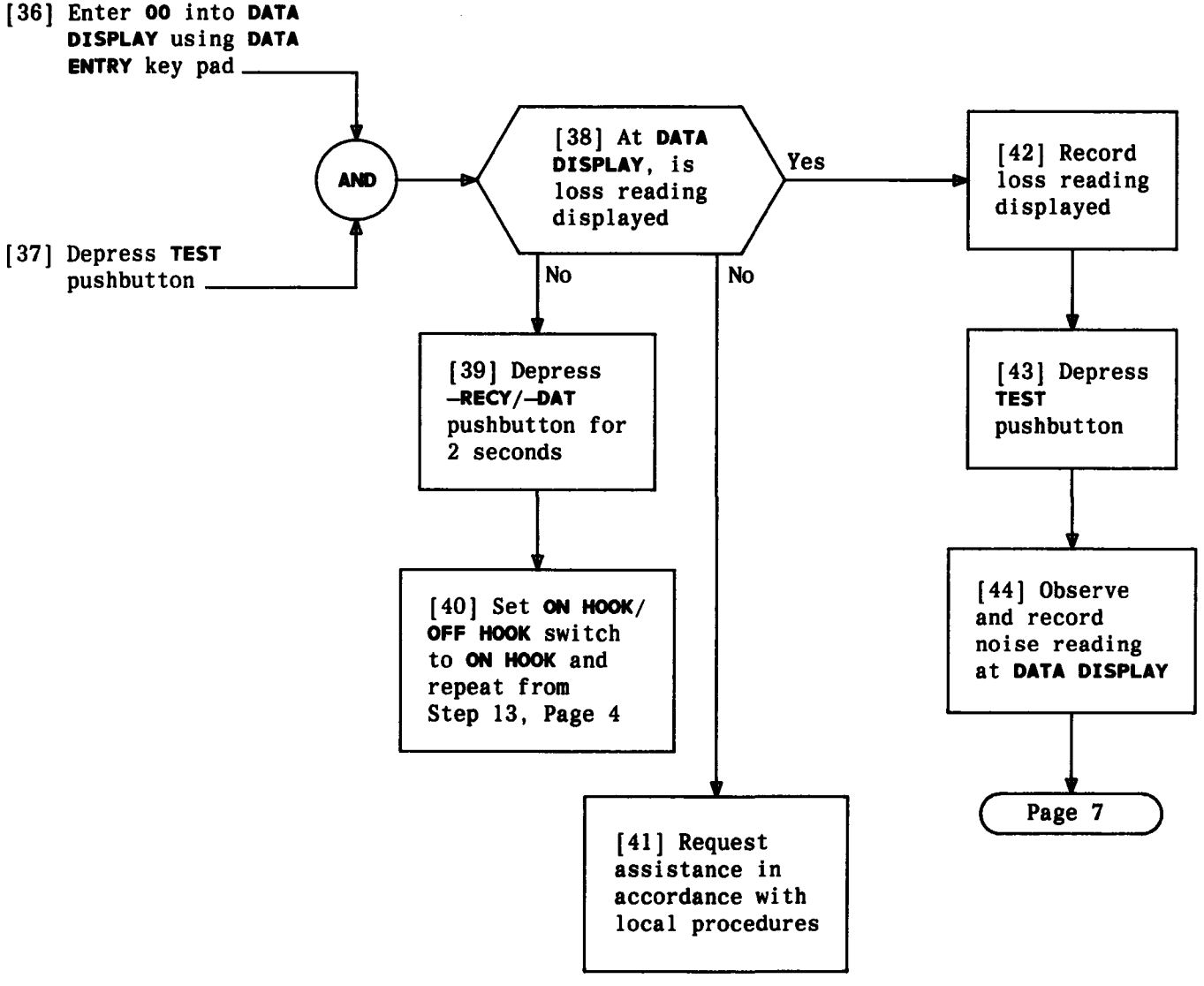

TEST REMOTE OFFICE TEST LINE (ROTL) USING 92A CONTROL UNIT – 105-TYPE TEST LINE AT FAR END

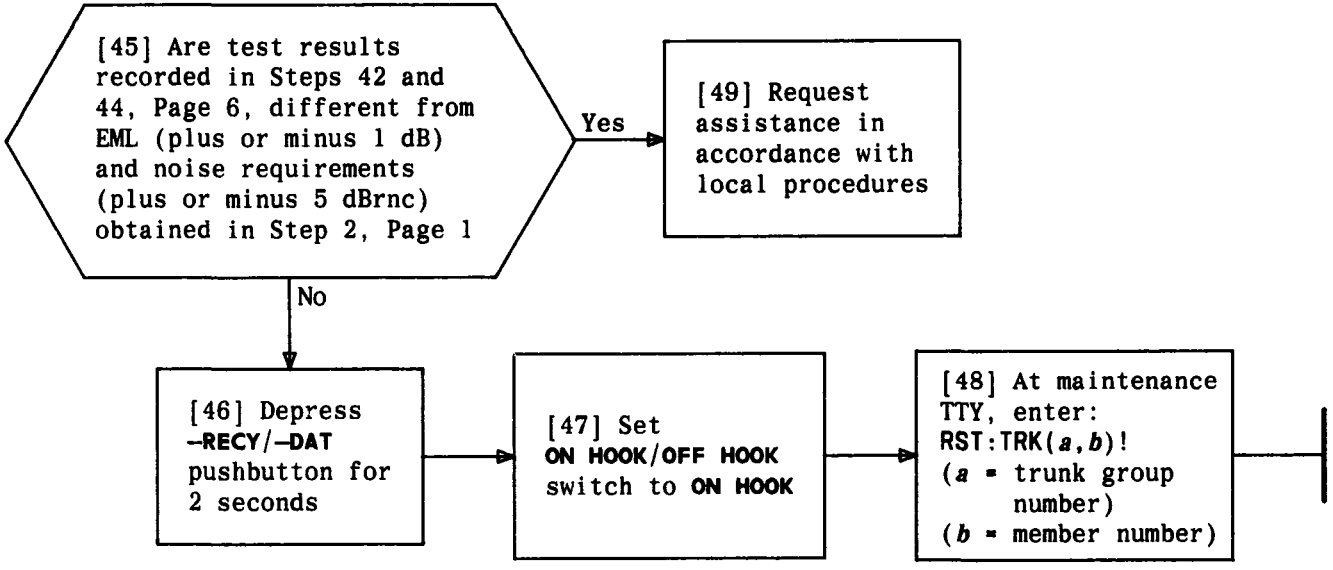

TEST REMOTE OFFICE TEST LINE (ROTL) USING 92A CONTROL UNIT – 105-TYPE TEST LINE AT FAR END

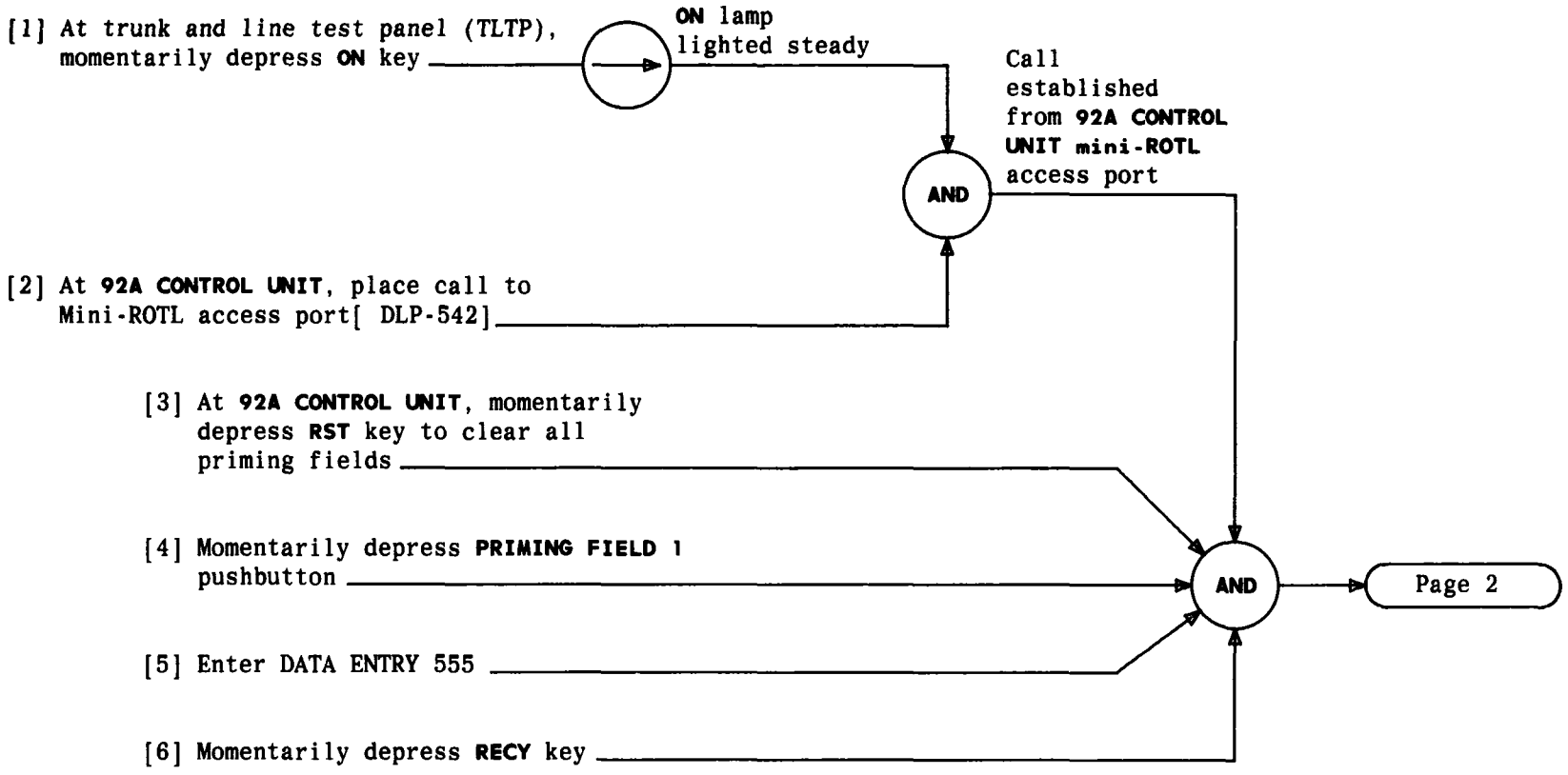

ESTABLISH OFFICE CONNECTIONS TO MINI-ROTL TUT PORT USING 92A CONTROL UNIT

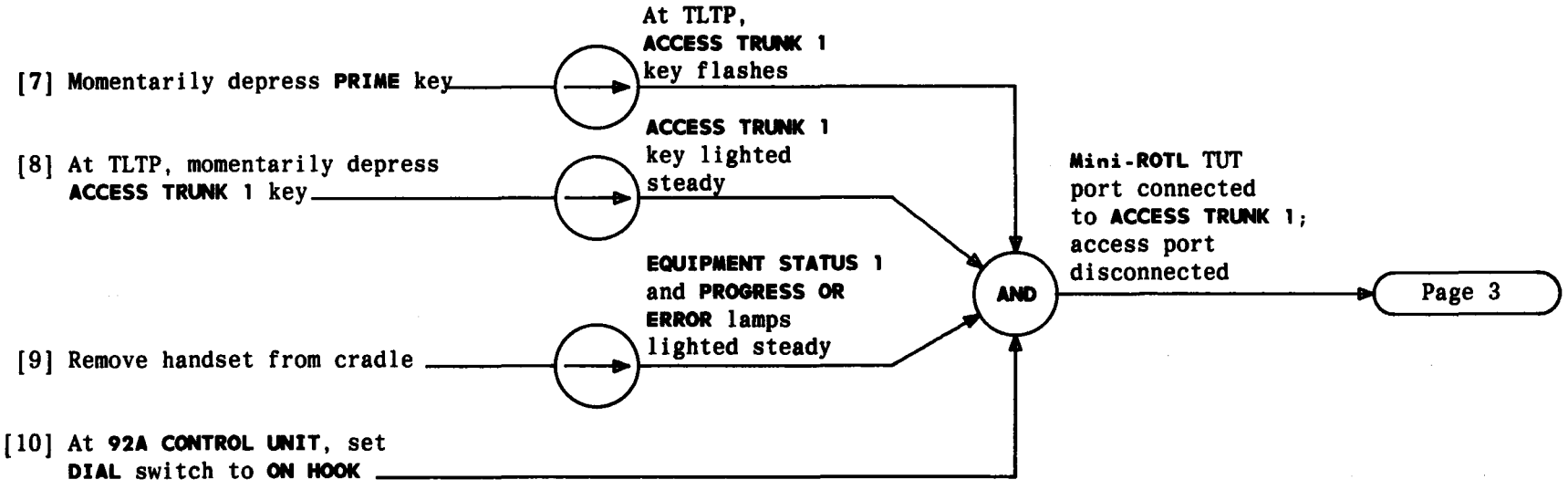

ESTABLISH OFFICE CONNECTIONS TO MINI-ROTL TUT PORT USING 92A CONTROL UNIT

[11] At TLTP set, **STATE CONTROL** to **ACCESS TRUNK 1**; ASSOCIATED JUNCTOR to **YES**; $\overline{A}$ $\overline{B}$ C [NOTE 1]

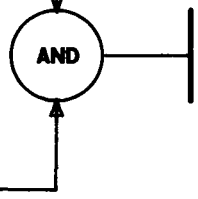

[12] Momentarily depress **EXECUTE** key [NOTE 2]

NOTES

1. The $\overline{A}$ $\overline{B}$ C switch settings are as follows:
   $\overline{A}$ down
   $\overline{B}$ down
   C up
2. After release of **EXECUTE** key, **EQUIPMENT STATUS 1** lamp lighted steady and **PROGRESS OR ERROR** lamps flashing 120 IPM

ESTABLISH OFFICE CONNECTIONS TO MINI-ROTL TUT PORT USING 92A CONTROL UNIT

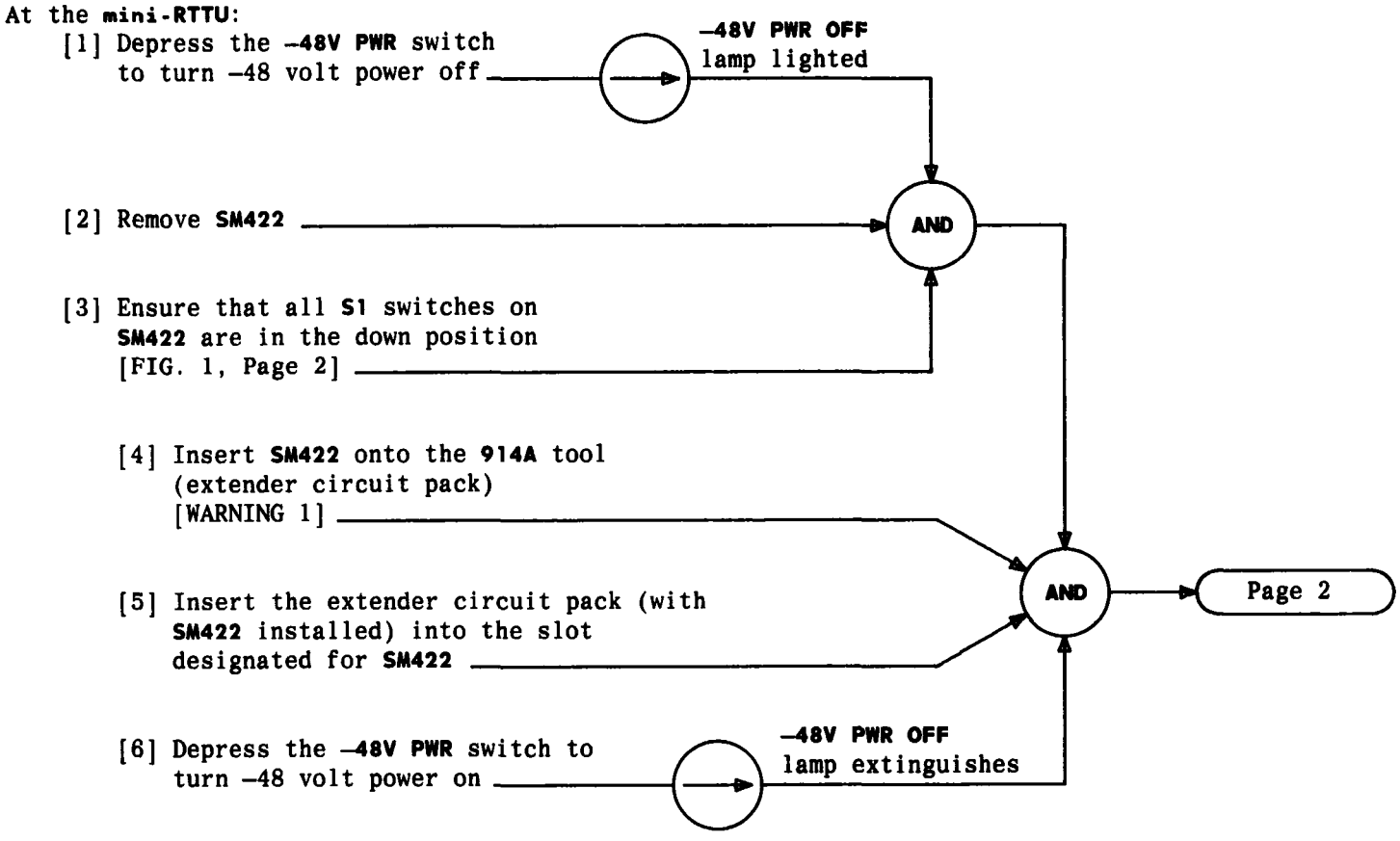

WARNING 1

***Damage may occur in* mini-RTTU *components if the circuit pack is not inserted into the extender before the extender is inserted into the* mini-RTTU

Issue 2	DEC 1983
233-142-110	DLP
PAGE 1 of 2	550

PREPARE MINI-RTTU FOR LOSS BUILD-OUT ADJUSTMENTS

At the **mini-RTTU**:

[7] Connect the portable data terminal to a 115 Vac outlet near the **mini-RTTU**

[8] Connect the **EIA RS 232** connector on the data terminal to the EIA connector on the **mini-RTTU**

[9] Turn on power to the data terminal

[10] Set the data terminal controls as shown in TABLE A [NOTE 1]

AND

At the **mini-RTTU**:

[11] Set the **SPKR** switch to the **ON** position

[12] Set the **VOL** switch to midrange

AND

DC:*jn*/RR;DC!
TM:@@/RR;TM!
AD:*jn*/RA!
RF:*jn*/RR;RF!
OM:*jn*/RR;OM!
(where *jn*=job number) appears on the data terminal

At the data terminal:

[13] Enter **AD:**/RA!** to reset **mini-RTTU** circuitry

TABLE A
DATA TERMINAL CONTROL POSITION

CONTROL	POSITION
Half duplex/full duplex	Half duplex
Parity	No parity
Auto line feed	On (on enabled)
Caps lock	On (or enabled)
Baud rate	300 or 1200

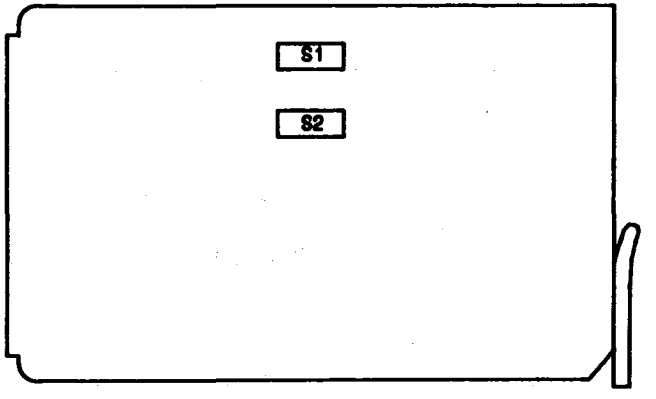

FIG. 1

NOTE 1
The default baud rate is 300. The **BREAK** key on the data terminal can be used to change the baud rate from 300 to 1200 or from 1200 to 300

PREPARE MINI-RTTU FOR LOSS BUILD-OUT ADJUSTMENTS

At the test frame (TLTP):

[1] Connect the **WILCOM*** **T** 105 B reference level test set (RTS) to a 115 Vac outlet at the test frame

[2] Set the **WILCOM T** 105 B RTS controls as shown in TABLE A

[3] Depress the **POWER** switch (pushbutton) on the **WILCOM T** 105 B RTS to turn on power

[4] Connect one end of the low loss test cord to **INPUT 310** jack on the **WILCOM T** 105 B RTS

[5] Connect the other end of the low loss cord to the **ACCESS TRUNK 2** jack located under the writing shelf on the test frame

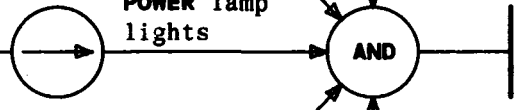

TABLE A	
CONTROL	POSITION
METER RANGE	±1 DB
INPUT LEVEL	0.00 DBM
INPUT	900Ω DBM TERM
FUNCTION	MEAS INPUT
OUTPUT	OFF

* Trademark of Wilcom Products, Inc.

PREPARE WILCOM T 105 B REFERENCE LEVEL TEST SET FOR MINI-RTTU LOSS BUILD-OUT MEASUREMENTS

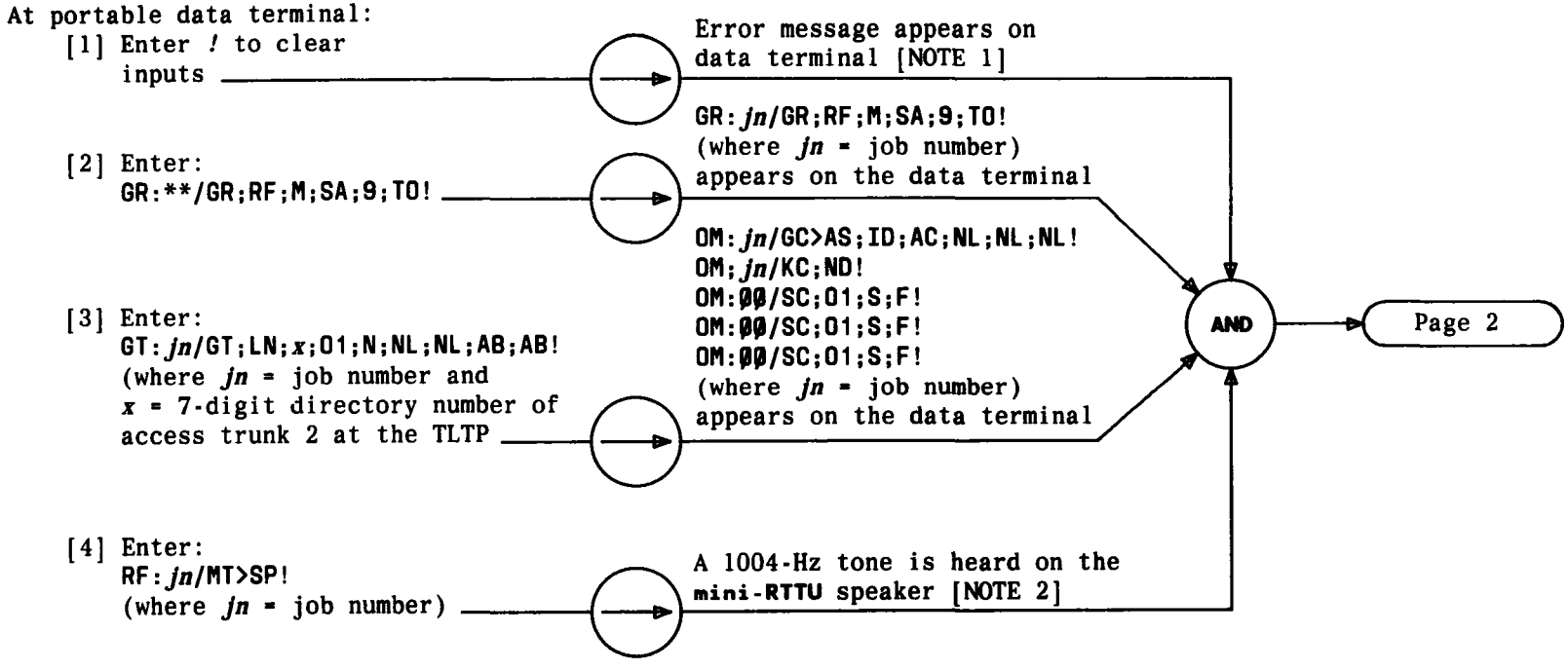

NOTES
1. Error message may be ignored
2. The 1000-Hz tone will last for 5 minutes if it is not released via the data terminal

ADJUST MINI-RTTU BUILDOUT

[5] Can **S1** switches on **SM422** be adjusted for a reading of 0.0 on the **WILCOM T** 105 B RTS [FIG. 1, NOTE 3]

Yes → Page 3

No

No

[9] Diagnose and repair trouble using SD-5P053-01 and SD-99392-01

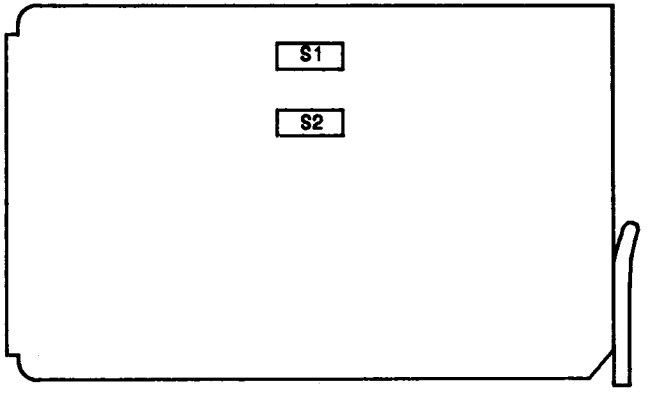

FIG. 1

[6] Enter:
CM:*jn*/CM;RL!
(where *jn* = job number

CM;*jn*/CM;RL!
(where *jn* = job number)
appears on the data terminal

AND

[8] Repeat from Step 1

[7] Replace **SM422** [DLP-554]

NOTE 3
S1 switches should be operated in pairs; 1 and 2, 3 and 4, 5 and 6, and 7 and 8

ADJUST MINI-RTTU BUILDOUT

At portable data terminal:

[10] Type CM:*jn*/CM;RL!
(where *jn* = job number)

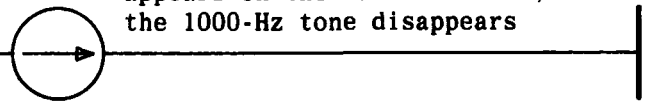

CM;*jn*/CM;RL!
(where *jn* = job number)
appears on the data terminal;
the 1000-Hz tone disappears

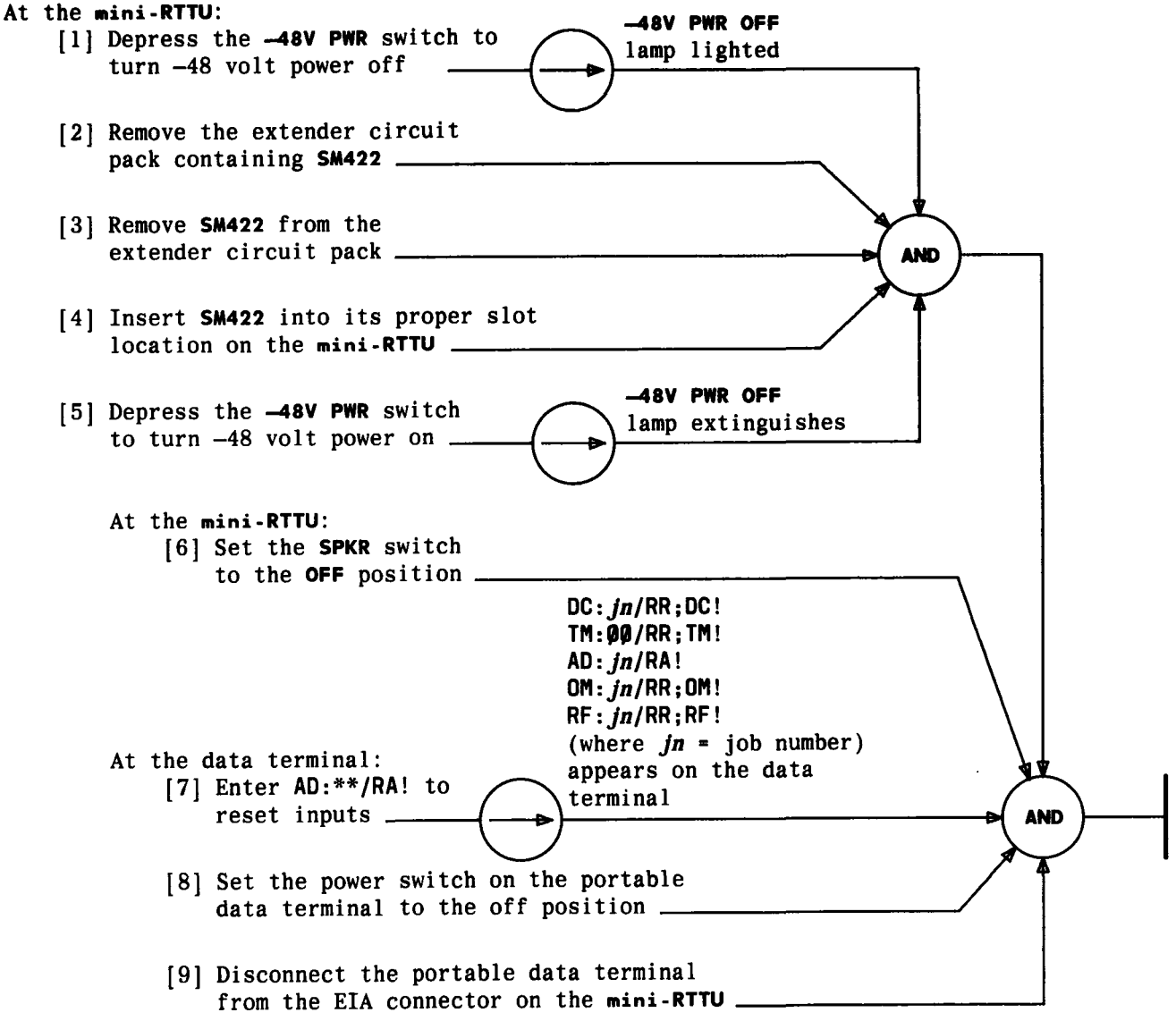

RESTORE MINI-RTTU TO NORMAL

At the **mini-RTTU**:

[1] Depress the **–48V PWR** switch to turn –48 volt power off

[2] Remove the desired circuit pack(s)

[3] Insert new (or good) circuit pack(s) into proper position(s) on the **mini-RTTU**

[4] Depress the **–48V PWR** switch to turn –48 volt power on

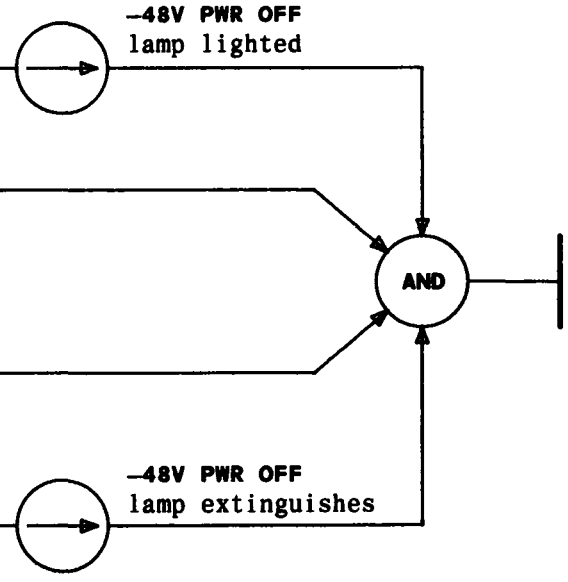

REPLACE MINI-RTTU CIRCUIT PACK(S)

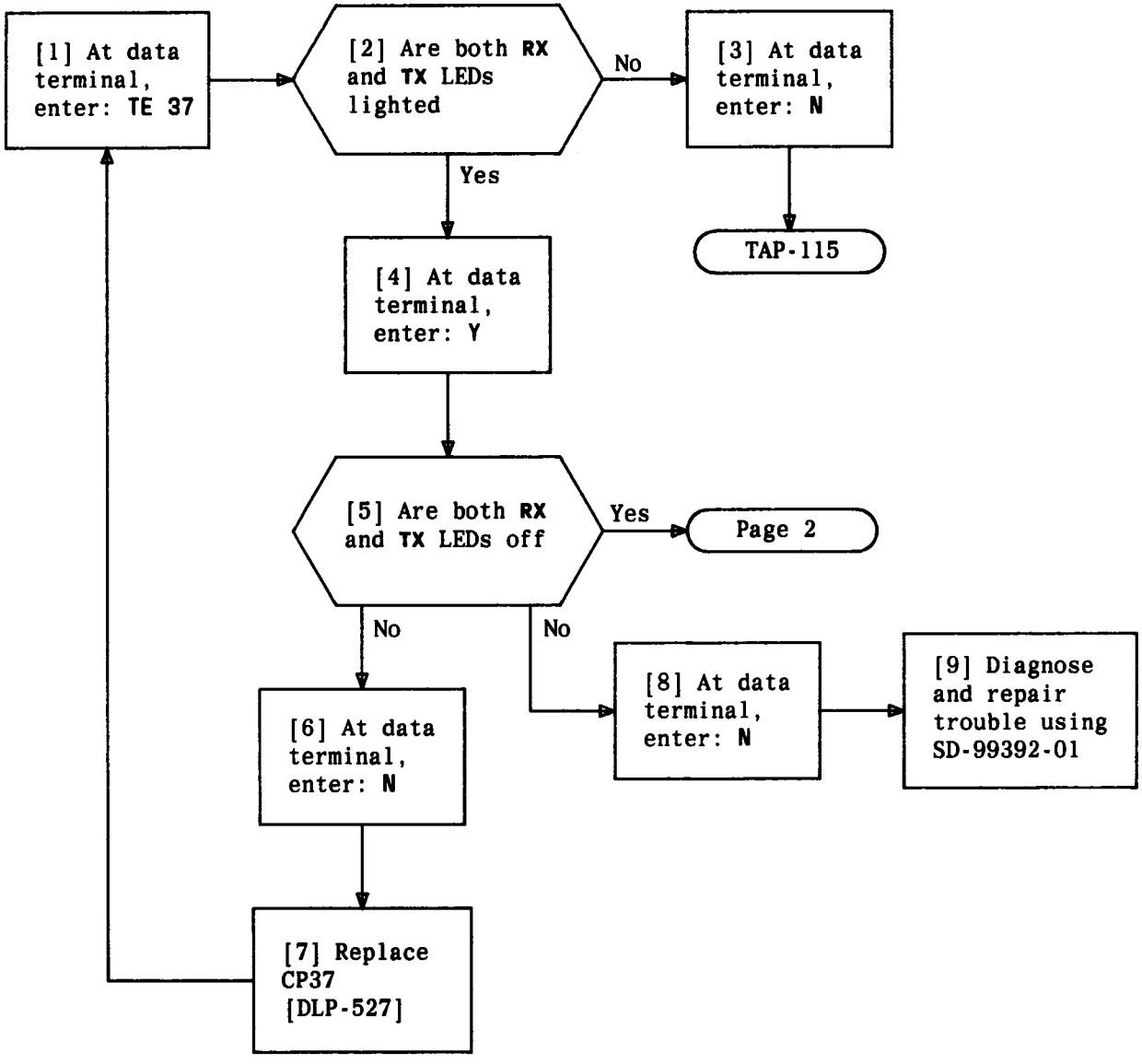

PERFORM USART DIAGNOSTIC TEST – TE 37

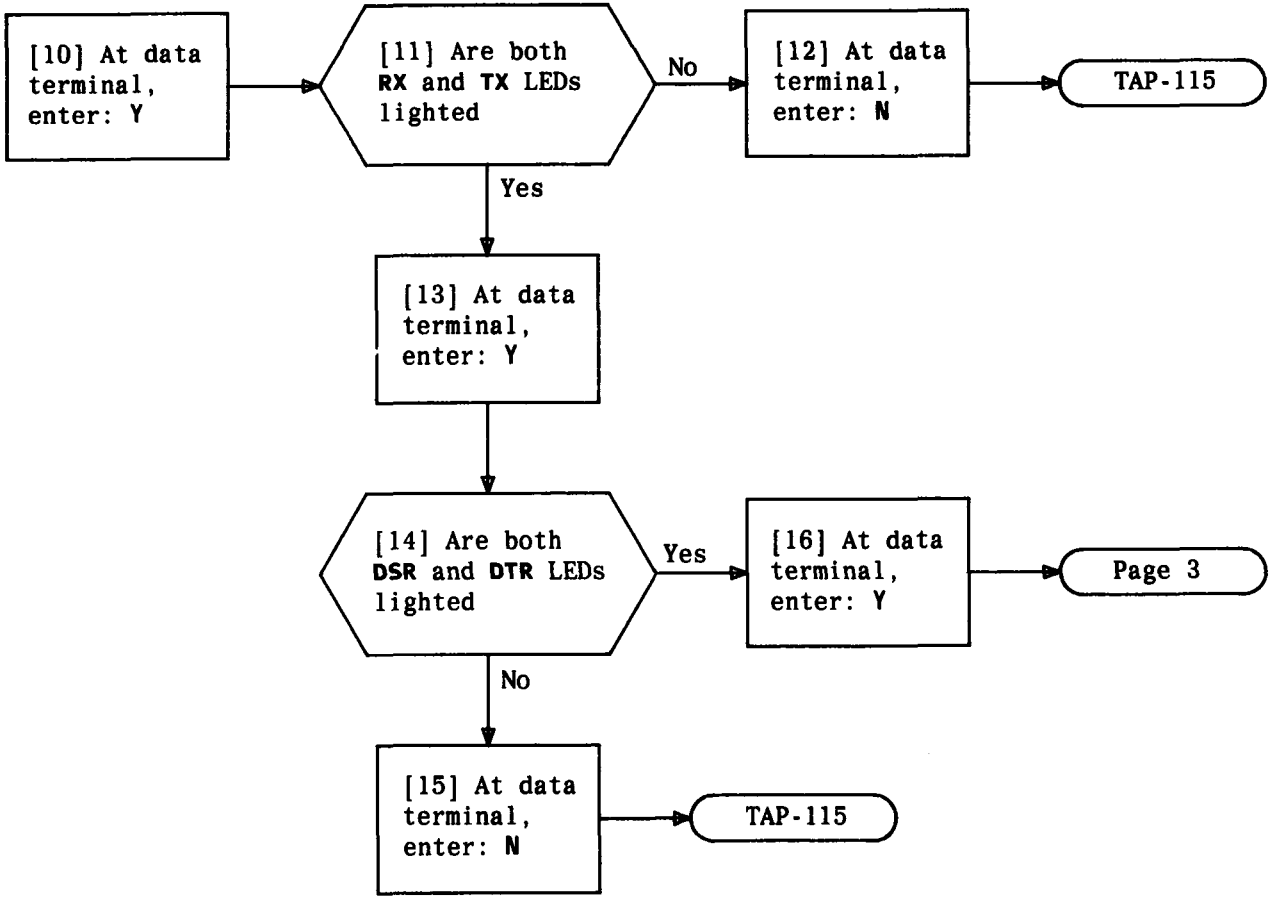

PERFORM USART DIAGNOSTIC TEST – TE 37

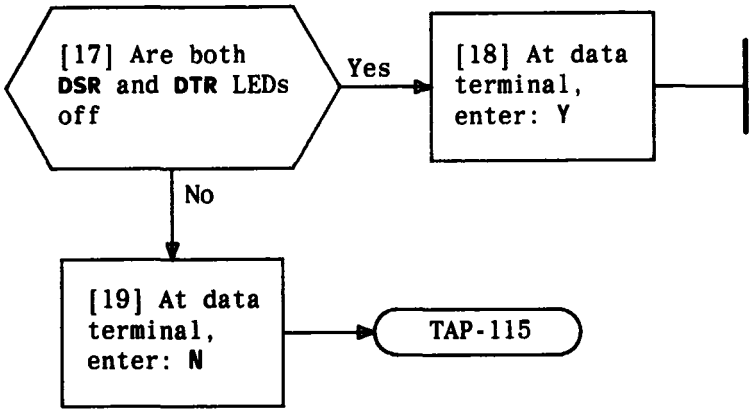

PERFORM USART DIAGNOSTIC TEST – TE 37

ITEM	ISSUE	ITEM	ISSUE	ITEM	ISSUE	ITEM	ISSUE	ITEM	ISSUE	ITEM	ISSUE
TPG-000		DLP-510		DLP-545							
IXL-001		DLP-511		DLP-546							
NTP-002		DLP-512		DLP-547							
NTP-003		DLP-513		DLP-548							
NTP-004		DLP-514		DLP-549							
NTP-005		DLP-515		DLP-550							
NTP-006		DLP-516		DLP-551							
NTP-007		DLP-517		DLP-552							
NTP-008		DLP-518		DLP-553							
TAP-100		DLP-519		DLP-554							
TAP-101		DLP-520		DLP-555							
TAP-102		DLP-521		CKL-891							
TAP-103		DLP-522		TNG-893							
TAP-104		DLP-523		DPL-895							
TAP-105		DLP-524									
TAP-106		DLP-525									
TAP-107		DLP-526									
TAP-108		DLP-527									
TAP-109		DLP-528									
TAP-110		DLP-529									
TAP-111		DLP-530									
TAP-112		DLP-531									
TAP-113		DLP-532									
TAP-114		DLP-533									
TAP-115		DLP-534									
DLP-500		DLP-535									
DLP-501		DLP-536									
DLP-502		DLP-537									
DLP-503		DLP-538									
DLP-504		DLP-539									
DLP-505		DLP-540									
DLP-506		DLP-541									
DLP-507		DLP-542									
DLP-508		DLP-543									
DLP-509		DLP-544									

This book is called a Task Oriented Practice or "TOP". It is a programmed document that gives step-by-step instructions to enable you to do a job (or task). A TOP can be a very useful aid in doing your everyday work if you use it correctly.

An important thing to remember about TOP is that it is a programmed document giving step-by-step instructions to do a job. Since the instructions are given in the order that they must be done, you cannot enter a procedure except at the beginning. You ***must*** do the step-by-step instructions in the order given. Failure to follow the instructions in the proper order may cause service interruptions.

Another thing to remember about TOP is that it contains all the instructions that you need to do a job. If you are experienced on a particular job, TOP will provide you with just that information you need to do the job. If you are doing the job for the first time, you will be given step-by-step instructions with enough detail so that you will not have to guess or remember where to find the necessary details. Remember that TOP can provide you with just that information you need regardless of your experience in doing a job.

The work that you do can be classified into two broad job categories – ***Trouble Clearing*** and ***Non Trouble Clearing***. This is how TOP defines these two types of work:

Trouble Clearing

Trouble clearing is simply what it says – that work you do to clear and repair troubles in the system. Trouble clearing may be done in answering a customer complaint or in responding to an office alarm, a trouble report, or an abnormal TTY printout, etc.

Non Trouble Clearing

Non trouble clearing is simply what it says – that work you do which is not connected with trouble clearing. This type is work that you do to accept a system after it has been installed, turn up a system for service, maintain a system according to a controlled maintenance plan, etc.

Now glance briefly at the front cover. In the upper right corner is a 9-digit number which identifies the volume. Near the center is the title of the volume which tells you something about the contents, such as the system (or subsystem) name and perhaps what kind of jobs are included in the volume. Next is the decision-action-logic diagram which directs you either to this training package or to 001 depending on your ability to use TOP.

Now turn to FIG. 1 which shows a typical page of 001. In the lower left is the title, "TASK INDEX LIST" which tells you something about this list, such as it is a listing of tasks arranged in alphabetical order. This list is actually a listing of the tasks included in the volume. The tasks are listed in alphabetical order and permuted on key words to simplify locating a task. On the right side of the page is a column of reference numbers under the heading "THEN GO TO." To use this list, locate the job to be done and turn to the reference number in the "THEN GO TO" column.

Now assume that you have been assigned the task of performing a system test on a system covered by a TOP. On 001 in FIG. 1, locate the job "System Test." Notice that this entry tells you to go to NTP-016 (Non Trouble Procedure) under the "THEN GO TO" column. Next you will have to locate the procedure, NTP-016. All procedures in a TOP are arranged in numerical sequence. In actual use of TOP, you would simply turn to the procedure. Look over

HOW TO USE TOP

FIND YOUR JOB IN THE LIST BELOW	THEN GO TO
Alert; External – Horn, Ringer, Etc. – Remove	NTP-028
Amplifiers; Channel – Recorded Announcement Frame – Test	NTP-009
ARO3 PWR ALM RA bb – bb = 16-30	TAP-105
BRDG LED – Does Not Light – Correct	TAP-117
Bridging Controller; Trunk – J1C015MB – Replace	DLP-572
Channel Amplifiers – Recorded Announcment Frame – Test	NTP-009
Drum Wiper – Common Systems Recorded Announcement Frame – Inspect	NTP-010
Extended Station Capability – Nonkey Set Only – Reported Failure	TAP-123
External Alert – Horn, Ringer, Etc. – Remove	NTP-028
Interchange Two Working Station Numbers	NTP-081
LED; **BRDG** – Does Not Light – Correct	TAP-117
Loudspeaker Paging – Add	NTP-059
Loudspeaker; – Remove	NTP-006
Station Capability; Extended – Nonkey Set Only – Reported Failure	TAP-123
System Test – Perform	NTP-016
Trunk Bridging Controller – J1C015MB – Replace	DLP-572
TTY Printout – **ARO3 PWR ALM RA** bb – bb = 16-30	TAP-105
Wiper; Drum – Common Systems Recorded Announcment Frame – Inspect	NTP-010

TASK INDEX LIST (Contd)

Issue 1	DEC 1980
123-456-789	IXL
PAGE 2 of 2	001

FIG. 1

HOW TO USE TOP

the following example which shows a typical page of NTP-016. Note that the items are numbered in the left column. They ***must*** be completed in that order. You will also note that in item 2 there are some lettered (A, B, C) items. These lettered items are optional ways to do an item, that is you only have to do one of the lettered items.

Remember that this procedure gives you all the items that must be done and the order in which they must be done to complete the job. If you know how to do an item, you should go ahead and do it without going to the referenced details in the "FOR DETAILS, GO TO" column. If, on the other hand, you need additional details on how to do the item, then you should turn to the procedure listed in the "FOR DETAILS, GO TO" column. In either case, after completing an item, you should continue with the next item.

A TOP is designed so that you have to read only what is necessary to get your job done. If you know how to do an item, look no further for the "how to" information – just do the item and go on to the next item. This idea is called "bypassing" in TOP. In addition to not having to

DO THE ITEMS BELOW IN THE ORDER LISTED	FOR DETAILS, GO TO
1 Obtain Support Apparatus Listed Below: • Hewlett-Packard 3531A Transmission Measuring Set • 2P4C Patching Cord	–
2 Place SEC/SEB in Off-Line Mode	–
A. If in On-Line Mode, Change System From On-Line to Off-Line	DLP-509
B. If Powered Down, Condition System for Off-Line Operation as Follows:	–
1. Power up Minicomputer	DLP-503
2. Power up Line Printer	DLP-528
3. Power up Maintenance Terminal	DLP-510
7 Run Computer Display Terminal Test for All Positions	DLP-513
8 Mount Tape	DLP-500

Issue 1	DEC 1980
123-456-789	NTP
PAGE 1 of 4	016

PERFORM SYSTEM TEST

	TNG
PAGE 3 of 8	893

HOW TO USE TOP

look further for details, three other ways of "bypassing" are provided in TOP to help you bypass reading information you already know (see FIG. 2):

Summary Statement

A summary statement is used with a procedure to tell you briefly how to do the procedure and what type measurement or result can be observed. If you can do the procedure after reading the summary, go ahead and do it without reading any further. Simple procedures may not have summaries.

Result Statement

A result statement may be used in a flow-charted procedure along with the AND symbol. If, after reading the results statement, you know how to do the action indicated, go ahead and do it without reading the steps associated with the AND symbol.

Support Procedures

When you see the following kind of reference in TOP it refers to a support procedure:
The support procedure [DLP-530] (Detailed Level Procedure) provides the information on how to operate the VTVM. Here again, if you already know how to operate the VTVM, go ahead and do it without looking up any further information.

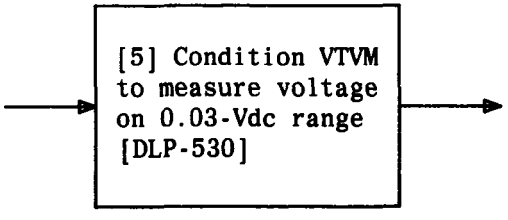

Now assume that you are doing a system test on a system covered by a TOP. In the process of doing this test you are instructed to mount a tape. For the purposes of this example, assume that you do not know how to mount the tape and must look up additional details. Figure 2 on Page 5 shows you examples of bypassing that can be used. Take a few moments to examine this figure and make sure you understand the techniques of bypassing.

While using a TOP, you will probably run across a reference similar to this:

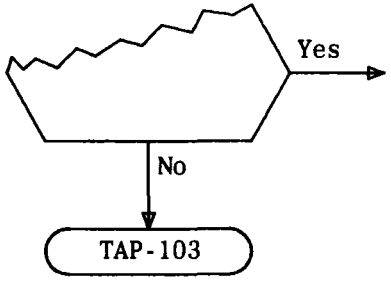

This reference to TAP-103 (Trouble Analysis Procedure) indicates that the equipment is not operating correctly, and that you should refer to TAP-103 and clear this trouble condition. After clearing the trouble, you should reenter the flowchart at the beginning (Step 1).

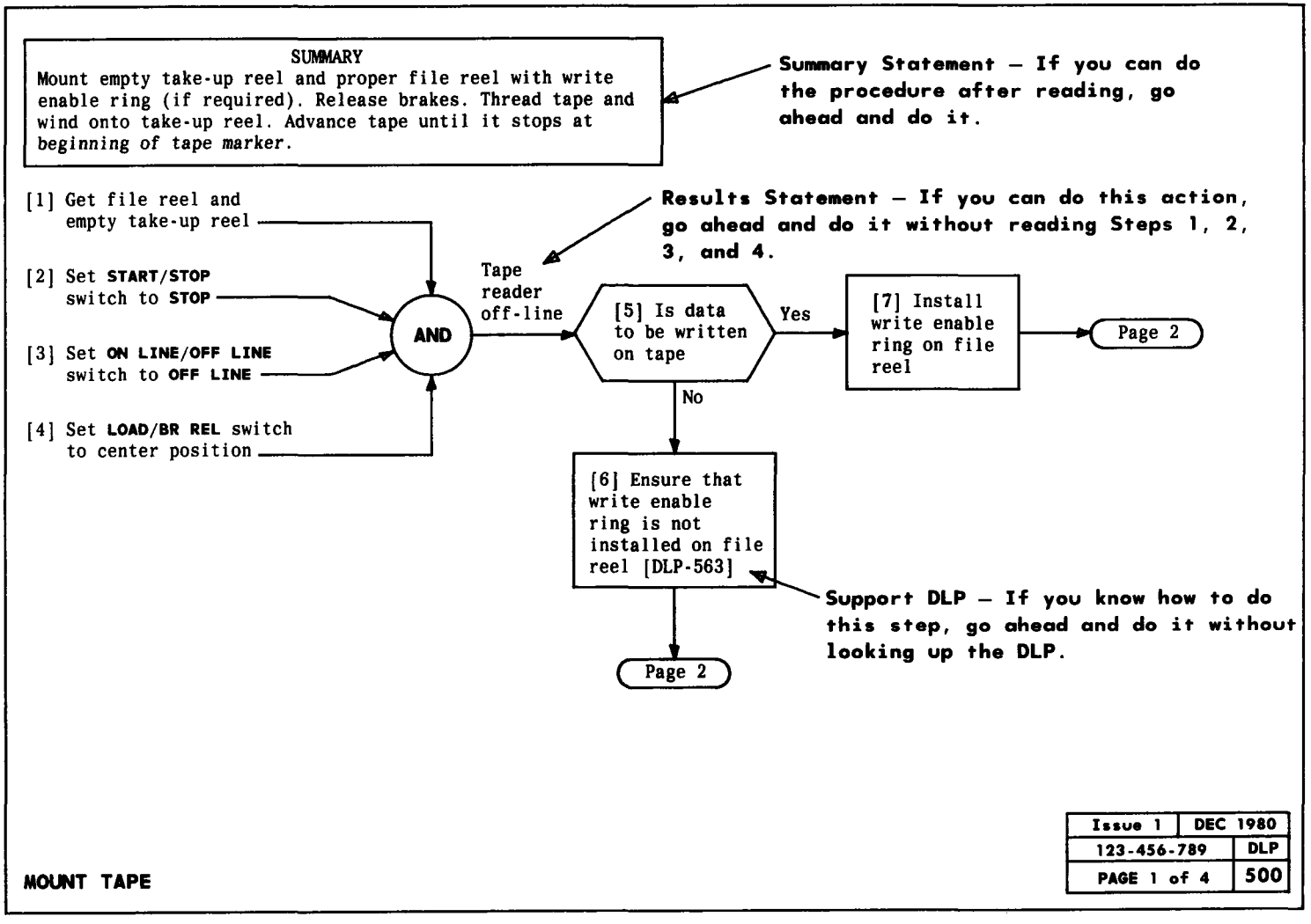
SUMMARY
Mount empty take-up reel and proper file reel with write enable ring (if required). Release brakes. Thread tape and wind onto take-up reel. Advance tape until it stops at beginning of tape marker.
Summary Statement – If you can do the procedure after reading, go ahead and do it.
Results Statement – If you can do this action, go ahead and do it without reading Steps 1, 2, 3, and 4.
[1] Get file reel and empty take-up reel
[2] Set START/STOP switch to STOP
[3] Set ON LINE/OFF LINE switch to OFF LINE
[4] Set LOAD/BR REL switch to center position
AND
Tape reader off-line
[5] Is data to be written on tape
Yes
No
[7] Install write enable ring on file reel
Page 2
[6] Ensure that write enable ring is not installed on file reel [DLP-563]
Page 2
Support DLP – If you know how to do this step, go ahead and do it without looking up the DLP.
MOUNT TAPE
Issue 1
DEC 1980
123-456-789
DLP
PAGE 1 of 4
500

FIG. 2

This idea can be carried further. In some cases, a decision block may have more than one abnormal output. This means that you should try more than one solution to the problem. See the example below.

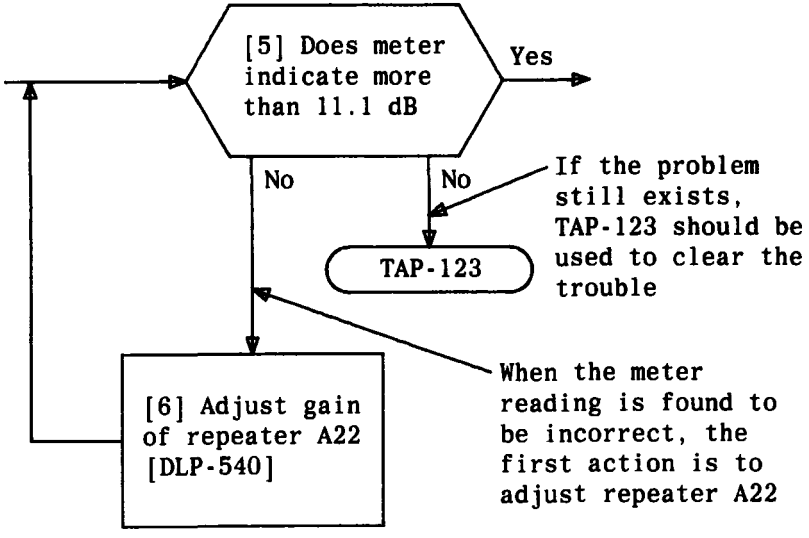

Trouble-clearing information in TOP is used basically the same way as non trouble-clearing information. When an alarm or trouble report requires you to troubleshoot a system covered by a TOP, the TASK INDEX LIST (IXL-001) is the place to start. After locating your job on IXL-001 you will be referenced to a Trouble Analysis Procedure (TAP) to find the information to aid in the location of the trouble. The TAP may reference to other information, such as Trouble Analysis Data (TAD) or Isolation Diagram (ISD) as an aid in the trouble-clearing process.

Now assume that you have to clear a major alarm on a terminal in a system covered by a TOP. Figure 3 on Page 7 shows how to access and how to use trouble-clearing information.

HOW TO USE TOP

A TOP shows hard-wired and plug-in units on Isolation Diagrams (ISD) in the following manner:

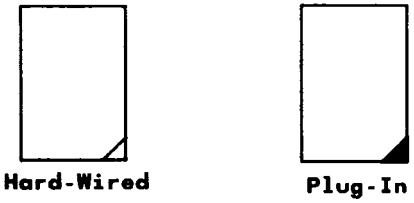

Always do a job safely. Below are three things you should heed in TOP:

DANGER – ***means there is a possibility of personal injury***

CAUTION – ***means there is a possibility of service interruptions***

WARNING – ***means there is a possibility of equipment damage***

TABLE A on Page 8 shows some of the more important symbols and definitions.

While using TOP, if you find errors, or if a procedure is inadequate or missing, call the TOP HOTLINE number shown on the front cover. Your comments are greatly needed to help prepare better documentation. Comments may also be forwarded using form E3973 which is available through your company.

Now that you know how to use TOP, return to IXL-001 and find the job you need to do.

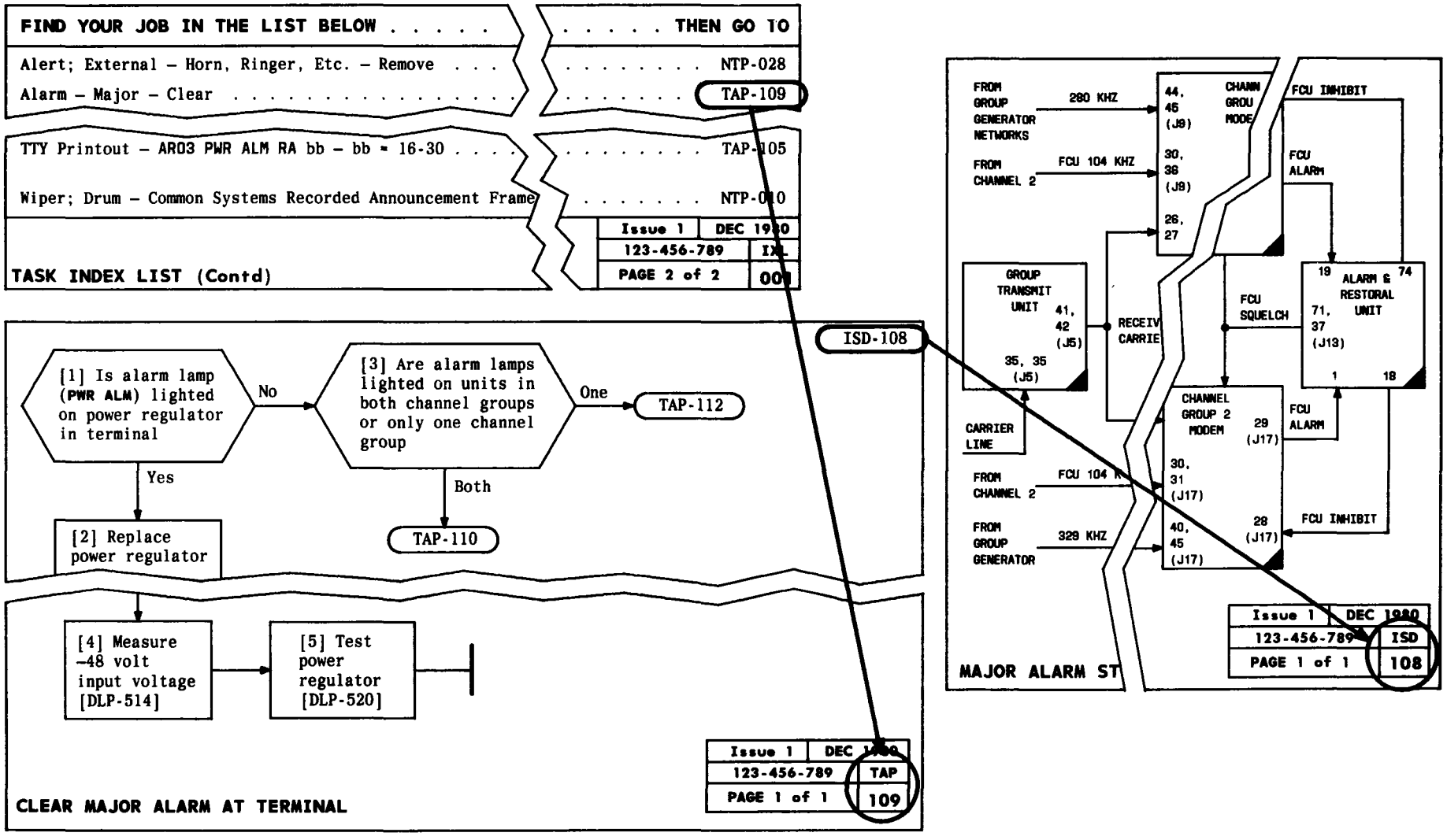
FIND YOUR JOB IN THE LIST BELOW . . . . .
. . . . . THEN GO TO
Alert; External – Horn, Ringer, Etc. – Remove . . .
. . . . . NTP-028
Alarm – Major – Clear . . . . . .
. . . . . TAP-109
TTY Printout – AR03 PWR ALM RA bb – bb = 16-30 . . . .
. . . . . TAP-105
Wiper; Drum – Common Systems Recorded Announcement Frame
. . . . . NTP-010
Issue 1 DEC 1980
123-456-789 IXL
PAGE 2 of 2 001
TASK INDEX LIST (Contd)
ISD-108
[1] Is alarm lamp (PWR ALM) lighted on power regulator in terminal
No
[3] Are alarm lamps lighted on units in both channel groups or only one channel group
One
TAP-112
Yes
Both
[2] Replace power regulator
TAP-110
[4] Measure –48 volt input voltage [DLP-514]
[5] Test power regulator [DLP-520]
Issue 1 DEC 1980
123-456-789 TAP
PAGE 1 of 1 109
CLEAR MAJOR ALARM AT TERMINAL
FROM GROUP GENERATOR NETWORKS
280 KHZ
FROM CHANNEL 2
FCU 104 KHZ
44, 45 (J9)
30, 38 (J9)
26, 27
CHANN GROU MODE
FCU INHIBIT
FCU ALARM
GROUP TRANSMIT UNIT
41, 42 (J5)
35, 35 (J5)
RECEIV CARRIE
FCU SQUELCH
19
ALARM & RESTORAL UNIT
74
71, 37 (J13)
1
18
CARRIER LINE
CHANNEL GROUP 2 MODEM
29 (J17)
FCU ALARM
30, 31 (J17)
FROM CHANNEL 2
FCU 104 K
FROM GROUP GENERATOR
329 KHZ
40, 45 (J17)
28 (J17)
FCU INHIBIT
Issue 1 DEC 1980
123-456-789 ISD
PAGE 1 of 1 108
MAJOR ALARM ST

FIG. 3

TABLE A IMPORTANT TOP SYMBOLS AND DEFINITIONS	
SYMBOL	**DEFINITION**
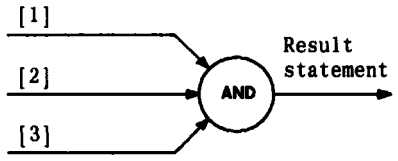	The AND operation symbol is used where the successful completion of a group of instructions accomplishes a meaningful result that can be defined. The symbol indicates that each input instruction must be performed in the order given to accomplish the output (result statement). In instances where results cannot be defined, results statements are not provided.
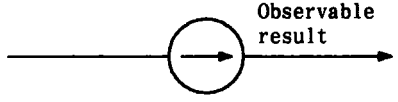	The flow-through symbol relates graphically a single instruction to the expected observable result(s).
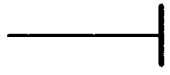	The end-of-procedure symbol denotes that the procedure has been completed.
	The reference bubble symbol indicates an exit from a page (either to a continuation page or to trouble-clearing data) or indicates the starting point of a procedure.
Acceptance (NTP-002)	Acceptance gives an overview of the acceptance techniques and facilities.
Maintenance Philosophy (TAD-100)	The maintenance philosophy, when provided, gives an overview of the considerations designed into the trouble-clearing procedures.
Checklist (CKL-891)	The checklist reflects the volume content (inventory) at any given time, the issue identifier of each data element therein, those data elements revised and/or added, and those data elements deleted from a previous issue.
Documentation Plan (DPL-895)	The documentation plan gives a bird's-eye view of all the TOP volumes covering a system. This plan can help you to quickly determine the correct volume.

3"ESS*" Switch	
Office Equipment	233-142-100
ROTL/Mini-RTTU	233-142-110
System Trouble Clearing	233-143-100
Power Equipment	233-144-100

* Trademark of Western Electric

3"ESS" SWITCH – TOP DOCUMENTATION PLAN