Task Oriented Practice
(TOP)

4ESS™ SWITCH
NON-CCS CIRCUIT - RECENT CHANGE
4E20 GENERIC PROGRAM
MACHINE ADMINISTRATION CENTER

TOP Comments Hot Line:
Monday through Friday
8:00 a.m. — 4:00 p.m. Eastern Time
Call 1-800-334-0404

Developed by
AT&T Network Systems Customer Education & Training

Copyright© 1995 AT&T — All Rights Reserved

Copyright© 1995 AT&T
All Rights Reserved

This material is protected by the copyright and trade secret laws of the United States and other countries. It may **not** be reproduced, distributed, or altered in any fashion by any entity including other AT&T Business Units or Divisions without the expressed written consent of the Customer Education and Training Organization.

For permission to reproduce or distribute, please contact:

4ESS™ Switch Documentation
Customer Information Development Manager (1 - 800 - 334 - 0404)

Notice
Every effort is made to ensure that the document information is complete and accurate at the time of printing. However, information is subject to change.

Trademarks
ACCUNET is a registered trademark of AT&T
4ESS is a trademark of AT&T

Ordering Information
To order this document and all associated documentation, use one of the following methods:

a. **AT&T Employees:** Mail or fax Form IND 1-80.80, available from the AT&T Customer Information Center, by using the following address or fax number.

   Note: AT&T Business Unit/Division and all required billing information must be provided.

   AT&T Customer Information Center
   Attention: Order Entry Department
   2855 North Franklin Road
   Indianapolis, Indiana 46219-1999
   or
   Call: 1-800-432-6600 Fax: 1-317-322-6484

b. **Local Exchange Carriers (LEC):** Process orders through your Technical Information Resource Management (TIRM) coordinator. If you are unsure who your TIRM coordinator is, call 1-800-432-6600.

c. **Federal Government** orders must be faxed to the AT&T Customer Information Center using the following number:

   Fax: 1-317-322-6484

d. **All Others:** Call: 1-800-432-6600

Developed by:

AT&T Network Systems Customer Education & Training

FIND YOUR JOB IN THE LIST BELOW . . . . . THEN GO TO

4ESS **SWITCH RECENT CHANGE LOG BOOK —** Establish DLP-557

Acceptance NTP-002
Activate CON in CMS DLP-519
Add Non-CCS Trunks to Existing Domestic TSG NTP-006
Add Non-CCS Trunks to Existing International TSG NTP-014

CMS 961 Report — Obtain DLP-553
Cancel Circuit Order NTP-010
Change MF TSG to CCS7 TSG (TSG Cannot Be Removed From Service) NTP-017
Change MF TSG to CCS7 TSG (TSG Removed From Service) NTP-016
Complete Recent Change Worksheets to Delete Trunks and Discontinue Associated TSG NTP-008
Complete Recent Change Worksheets to Delete Trunks From TSG NTP-007
Coordinate Write of Backup ODA Tape NTP-015

Documentation Philosophy; Circuit Order Recent Change TAD-100
Determine Trunk Status DLP-513

Enter Recent Change Data Message to Delete Trunks or Discontinue TSG NTP-009
Establish Non-CCS Domestic 1-Way Incoming TSG and Add Associated Trunks NTP-004
Establish Non-CCS Domestic 1-Way Outgoing TSG and Add Associated Trunks NTP-005
Establish Non-CCS Domestic 2-Way TSG and Add Associated Trunks NTP-003
Establish Non-CCS International 1-Way Incoming TSG and Add Associated Trunks NTP-012
Establish Non-CCS International 1-Way Outgoing TSG and Add Associated Trunks NTP-013
Establish Non-CCS International 2-Way TSG and Add Associated Trunks NTP-011

FIND YOUR JOB IN THE LIST BELOW	THEN GO TO
MTT Tape Cartridge — Mount	DLP-500
MTT Tape Cartridge — Remove	DLP-549
Obtain Printout of ORNUs Entered in Buffer State	DLP-548
Obtain Printout of ORNUs Entered in Rollback Area	DLP-547
Reinitialization File — Audit	DLP-501
Reinitialization File — Establish	DLP-544
Verify TSG Circuit Identification Name (CIN)	DLP-509

Acceptance tests are not required in this volume.

ACCEPTANCE

DO THE ITEMS BELOW IN THE ORDER LISTED . . . . . FOR DETAILS, GO TO

	CMS CODE		
1	120/CON	If Not Already Activated, Activate Selected CON in CMS	DLP-519
2	250	Identify Range of Traffic Numbers (TFNs) Associated With Activated CON	DLP-520
3	402, 403, 404	At CMS Channel, Obtain Printouts of CMS 402, 403 and 404 Displays	DLP-521
4		If Not Already In Existence, Establish *4ESS* **SWITCH RECENT CHANGE LOG BOOK**	DLP-557
5		Complete Entries On *4ESS* **SWITCH RECENT CHANGE LOG SHEET** To Establish 2W TSG as Follows:	—
		1. Assign RC Order Number (ORNU) for RC Worksheet Form 100	DLP-522
		2. Under Column Heading **RCDM WORKSHEET**, Enter *100*	—
		3. Under Column Heading **DESCRIPTION OF RECENT CHANGE ORDER**, Enter *ESTABLISHES 2W TSG* (CIN of TSG)	—
6		Obtain Blank Copy of RC Worksheet Form 100 and Complete Entries on Form 100 to Establish 2W TSG as Follows:	—
		1. Following RC:TSG;NEW;OPT(TWOWAY), Enter *ACT*	—
		2. Following ORNU, Enter Assigned ORNU	—
	404	3. Following TSG, Enter TSG Circuit Identification Name (CIN) From Printout of CMS 404 Display for Activated CON	DLP-523
	404	4. Following TOT, Enter Type of Trunk Code (*ITOPA, NSDSD, STC, ETC, LCC, OCC, ITAND, ITOLL, PBX, SECIT, TAND* or *TOLLC*)	DLP-524
		5. Following QTFN, Enter *96*	—
		6. If Range of TFNs in Activated CON Exceeds 96, Perform the following to Add Additional Traffic Number Block (TFNB) to Exising TSG:	—
		1. Complete Entries on *4ESS* **SWITCH RECENT CHANGE LOG SHEET** to Add Additional TFNB to TSG As Follows:	—
		1. Assign RC ORNU for RC Worksheet Form 104	DLP-522
		2. Under Column Heading **RCDM WORKSHEET**, Enter *104*	—
		3. Under Column Heading **DESCRIPTION OF RECENT CHANGE ORDER**, Enter *ADDS ADDITIONAL TFNB TO 2W TSG* (CIN of TSG)	—

ESTABLISH NON-CCS DOMESTIC 2-WAY TSG AND ADD ASSOCIATED TRUNKS

DO THE ITEMS BELOW IN THE ORDER LISTED . . . . . FOR DETAILS, GO TO

	CMS CODE		
6 (Contd)		2. Obtain Blank Copy of RC Worksheet Form 104 and Complete Entries on Form 104 to Add Additional TFNB to TSG	DLP-525
		3. If There Are Still Circuits to be Entered, Repeat From Step 6.6 for Next Group of Circuits up to a Quantity of 96	–
	404	7. Following **SAT**, Enter Whether Satellite Facilities are Being used (*Y* or *N*)	DLP-527
	404	8. Following **DOM**, Enter Domain Code (*POTS, VRFY, SDNA, DEV, DED, 20-83, I56D, 164C, N64C, N64R, IVT* or *APN*)	DLP-526
		9. Following **ACD**, Enter Automatic Call Distributor Code (*Y, N, T* or Blank)	–
	404	10. Following **PSES**, Enter Prohibit Service Evaluation Code (*Y, N* or Blank)	DLP-528
	404	11. Following **REV**, Enter Reverse Hunt Code (*Y* or *N*)	DLP-529
		12. Following **RFMP**, Enter Ring Forward Miscellaneous Distributor Point Code (*Y, N* or Blank)	DLP-506
		13. Following **GEOSEP**, Enter Geographical Traffic Separation Class Code (*0-31*)	DLP-554
		14. Following **CCIS2WRE**, Leave This Field Blank	–
		15. Following **XCPA**, Leave This Field Blank	–
		16. Following **RFA**, Enter Ring Forward Allowed Code (*Y* or *N*)	DLP-530
	404	17. Determine Type of Pulsing (MF or DP)	DLP-531
		18. Following **FENPA**, Enter Far-End Numbering Plan Area Code (*200-999*)	–
		Note: From Far-End Equipment Engineering, Cutover Coordinator, Circuit Provision Bureau, or Equivalent Source, Obtain Information for Steps 6.19 Through 6.33 to be Entered on RC Worksheet Form 100	–
		19. Following **FENCLASS**, Enter Far-End Network Class Code (*ACCESA, ACCESO, PBX, POTS, ACCESI, CMC, OWATS* or Blank)	–
		20. Following **FENID**, Enter Far-End Network ID Code (Up to 6 Alphanumeric Characters or Blank)	–

DO THE ITEMS BELOW IN THE ORDER LISTED . . . . . FOR DETAILS, GO TO

	CMS CODE		
6 (Contd)		21. If FENCLASS Is ACCESA, Following **TFG** Enter Type Of Feature Group Code (*B*, *C*, *D* or Blank)	—
		22. Following **ISC**, Enter Incoming Signaling Characteristics (*DPDDSD, DPIMADG, DPIMMED, DTMFWK, MFDDSD, MFOPWK, MFWINK* or *DTS*)	—
		23. Following **OSC**, Enter Outgoing Signaling Characteristics (*DPDDSD, DPIMMED, DPWINK, DTMFWK, MFDDSD, MFWINK, MIOPNOP* or *ICOPNOP*)	—
		24. Following **DPSTOP**, Enter Dial Pulse Stop Code (*Y, N,* or Blank)	—
		25. Following **DELAY**, Enter Delay Internal Code (*20*, *80*, *220*, *70*, *140*, *210*, *280* or Blank)	—
		26. Following **MFSPEED**, Enter Multifrequency Speed Code (*7*, *10* or Blank)	—
		27. Following **DNHR**, Enter Dynamic Non-Hierarchical Routing (*Y* or *N*)	—
		28. Following **FESC6**, Enter Far-End 6-Digit Screening Code (*Y* or *N*)	—
		29. If TOT Is PBX, Perform the Following on RC Worksheet Form 100:	—
		1. If DOM Entry Is SDNA, Following **PBXESGD** Enter *Y*; Otherwise, Leave Blank	—
		2. Following **PBXAW**, Enter PBX Answer Withheld Code (*Y*, *N* or Blank)	—
		30. Following **BN**, Enter Billing Number Code (3-, 4- or 10-Digit Number or Blank)	—
		31. Following **BRL**, Enter Billing Record Length Code (*S*, *L* or Blank)	—
		32. Following **EAS**, Enter Equal Access Signaling Code (*N*, *A*, *E*, *D* or *R*)	—
		33. Following **FAR4E**, Enter Whether Far End Is *4ESS* Switch (*Y* or *N*)	—
		Note: From Routing Group Supervisor or Equivalent Source, Obtain Information for Steps 6.34 Through 6.35 to be Entered on RC Worksheet Form 100	—
		34. Following **MTSC**, Enter Multiple Treatment Screening Class Code (*0-63*)	—
		35. Following **GNSC**, Enter Go/No Go Screening Class Code (*0-3*)	—
		Note: From MAC Supervisor or Equivalent Source, Obtain Information for Steps 6.36 Through 6.38 to be Entered on RC Worksheet Form 100	—
		36. Following **ADIG**, Enter A Digit Reconstruction Code (*0*, *2-9* or Blank)	—

DO THE ITEMS BELOW IN THE ORDER LISTED . . . . . FOR DETAILS, GO TO

	CMS CODE		
6 (Contd)		37. Following **GLARE**, Enter Glare Control Code (*A*, *N* or Blank)	—
		38. Following **INSEP**, Enter Incoming Traffic Separation Class Code (*0-255*)	—
		Note: From Trunk Operation Center (TOC) or Equivalent Source, Obtain Information for Steps 6.39 Through 6.49 and Enter on RC Worksheet Form 100	—
		39. Following **NEOTR**, Enter Near-End Operational Test Responsibility Code (*Y* or *N*)	—
		40. Following **CAREA**, Enter Control Area Code (*0-9*)	—
		41. Following **CPOS**, Enter Control Position Code (*0-9*)	—
		42. Following **OTSTT**, Enter Operational Through Switch Test Type (*CTX2*, *CTX3*, *SXS*, *SYNC*, *T103* or *N*)	—
		43. If OTSTT Entry Is **N**, Following **OTSTN** Leave This Field Blank; Otherwise, Enter Operational Through Switch Test Number (*000-9999999*)	—
		44. Following **XTSTT**, Enter Transmission Through Switch Test Type (*T100*, *T102*, *T105* or *N*)	—
		45. If XTSTT Entry Is **N**, Following **XTSTN** Leave This Field Blank; Otherwise, Enter Transmission Through Switch Test Number (*000-9999999*)	—
		46. Following **OTMTT**, Enter Operational Terminating Test Type (*CTX2*, *CTX3*, *SXS*, *SYNC*, *T103* or *N*)	—
		47. If OTMTT Entry Is **N**, Following **OTMTN** Leave This Field Blank; Otherwise, Enter Operational Terminating Test Number (*000-9999999*)	—
		48. Following **XTMTT**, Enter Transmission Terminating Test Type (*T100, T102, T105* or *N*)	—
		49. If XTMTT Entry Is **N**, Following **XTMTN**, Leave This Field Blank, Otherwise, Enter Transmission Terminating Test Number (*000-9999999*)	—
		50. Following **PCF**, Leave This Field Blank	—
		51. Following **AOPC**, Leave This Field Blank	—
		52. Following **DPC**, Leave This Field Blank	—
		53. Following **TSGBBC**, Leave This Field Blank	—

DO THE ITEMS BELOW IN THE ORDER LISTED . . . . . FOR DETAILS, GO TO

	CMS CODE		
6 (Contd)		54. Following **FEOFC**, Enter Far-End Office Code (*000-999* or Blank)	—
		55. Following **FELATA**, Enter Far-End Local Access and Transport Area Code (*000-999* or Blank)	—
		56. Following **IWZ1**, Enter International World Zone 1 Code (*Y*, *N* or Blank)	—
		57. Following **LSST**, Enter LATA/State Screening State Code (Two Alphabetic Characters or Blank)	—
		58. Following **MEM**, Enter Trunk Hunt With Memory Code (*Y*, *N* or Blank)	—
		59. Following **CBNPR**, Enter Calling Party Number/Billing Number Default Presentation Restriction Code (*Y*, *N* or Blank)	—
		60. Following **DNP**, Enter Dialed Number Preferred Code (*Y*, *N* or Blank)	—
		61. Following **PSOLI**, Leave This Field Blank	—
		62. Following **ITC**, Enter Incoming Trunk Subgroup Class (*0-3* or Blank)	—
		63. Following **NPARINH**, Enter Inhibit NPA Reconstruction Code (*Y*, *N* or Blank)	—
		64. Following **WATSBN**, Enter WATS Billing Number (10-Digit Number or Blank)	—
		65. Following **PSBN**, Enter Prohibit Sending Billing Number Code (*Y*, *N* or Blank)	—
		66. Following **PSCPN**, Enter Prohibit Sending Calling Party Number Code (*Y*, *N* or Blank)	—
		67. Following **ANISID**, Enter ANI/SID Request Code (*NONE*, *ANI*, *PANI*, *PSID*, *REQ*, *SID* or Blank)	—
		68. Following **WANISID**, Enter WATS Service ANI/SID Request Code (*NONE*, *ANI*, *PANI*, *PSID*, *REQ*, *SID* or Blank)	—
		69. Following **PSUUI**, Leave This Field Blank	—
		70. Following **SCFN**, Leave This Field Blank	—
		71. Following **OVLP**, Leave This Field Blank	—
		72. Following **APS**, Leave This Field Blank	—
		73. Following **CHNEG**, Leave This Field Blank	—
		74. Following **PSATP**, Leave This Field Blank	—

DO THE ITEMS BELOW IN THE ORDER LISTED . . . . . FOR DETAILS, GO TO

	CMS CODE		
6 (Contd)		75. Following **DOFP**, Enter Disable Outgoing Fraud Prevention Code (*Y* or *N*)	—
		76. Following **DATA**, Leave This Field Blank	—
		77. Following **BFTIS**, Leave This Field Blank	—
		78. Following **BFTNI**, Leave This Field Blank	—
		79. Following **INCID**, Leave This Field Blank	—
		80. Following **ONCID**, Leave This Field Blank	—
		81. Following **MULAW**, Leave This Field Blank	
		82. Following **CID**, Leave This Field Blank	
		83. Following **SINDEX**, Enter Access Charge Verification Sampling Rate Index Code (*0-2*, *4*, *8*, *16*, *32*, *64* or Blank)	—
		84. Following **S1**, Enter Spare Code (*0-7* or Blank)	—
		85. Following **S2 through S10**, Enter Spare Code (*Y*, *N* or Blank)	—
		86. Following **CODSC**, Enter CPE Outgoing Disconnect Code (*Y* or *N*)	—
		87. Following **IT**, Enter Intertoll Treatment Code (*Y*, *N* or Blank)	—
		88. Following **PBXNWW**, Enter PBX No Wait For Wink Code (*Y*, *N* or Blank)	—
		89. If Performing Circuit Orders in an AT&T Switching Network, Complete the Following Entries On RC Worksheet Form 100:	—
		1. Following **VDCAP**, Refer to PTG-4 for Valid Entries	—
		2. Following **DATAF**, Refer to PTG-4 for Valid Entries	—
		3. Following **FEAREA**, Refer to PTG-4 for Valid Entries	—
		4. Following **FESWID**, Refer to PTG-4 for Valid Entries	—
		5. Following **EXSEQ**, Refer to PTG-4 for Valid Entries	—
		6. Following **FEPTY**, Refer to PTG-4 for Valid Entries	—
		7. Following **GSDN**, Refer to PTG-4 for Valid Entries	—

DO THE ITEMS BELOW IN THE ORDER LISTED . . . . . FOR DETAILS, GO TO

	CMS CODE		
6 (Contd)		8. Following **GSDNPHSE**, Refer to PTG-4 for Valid Entries	—
		9. Following **SBRIV**, Refer to PTG-4 for Valid Entries	—
		10. Following **BNPT**, Refer to PTG-4 for Valid Entries	—
		11. Following **WRNTP**, Refer to PTG-4 for Valid Entries	—
		12. Following **CMERGE**, Refer to PTG-4 for Valid Entries	—
		13. Following **PRIT**, Refer to PTG-4 for Valid Entries	—
		14. Following **MEGC**, Refer to PTG-4 for Valid Entries	—
		15. Following **SDNA**, Refer to PTG-4 for Valid Entries	—
		16. Following **OWAT**, Refer to PTG-4 for Valid Entries	—
		17. Following **CBC**, Refer to PTG-4 for Valid Entries	—
		18. Following **DDD**, Refer to PTG-4 for Valid Entries	—
		19. Following **IDDD**, Refer to PTG-4 for Valid Entries	—
		20. Following **FOSPS**, Refer to PTG-4 for Valid Entries	—
		21. Following **CCIF**, Refer to PTG-4 for Valid Entries	—
		22. Following **SDNPLAN**, Refer to PTG-4 for Valid Entries	—
		23. Following **SKSP**, Refer to PTG-4 for Valid Entries	—
		24. Following **HYBRD**, Refer to PTG-4 for Valid Entries	—
		25. Following **ITELCO**, Refer to PTG-4 for Valid Entries	—
		26. Following **S5DIG**, Refer to PTG-4 for Valid Entries	—
		27. Following **D3DBN**, Refer to PTG-4 for Valid Entries	—
		28. Following **CSCSET**, Refer to PTG-4 for Valid Entries	—
		29. Following **ANCR**, Refer to PTG-4 for Valid Entries	—
		30. Following **ACCID**, Refer to PTG-4 for Valid Entries	—

DO THE ITEMS BELOW IN THE ORDER LISTED . . . . . FOR DETAILS, GO TO

	CMS CODE		
6 (Contd)		31. Following **ACCDTA**, Refer to PTG-4 for Valid Entries	—
		32. Following **PSTNG**, Refer to PTG-4 for Valid Entries	—
		33. Following **FLDSPR**, Refer to PTG-4 for Valid Entries	—
		34. Following **TRIDX**, Refer to PTG-4 for Valid Entries	—
		90. Following **REMARKS**, Enter ***CON*** Followed by Applicable CON Number	—
7	404	Determine Facility Type (D1, D2 or Other Than D1 or D2)	DLP-532
8		Obtain Blank Copy of RC Worksheet Form 200	—
9		If Identified Facility Type Is Other Than D1 or D2 Channel Bank, Complete RC Worksheet Form 200 to Add New Trunks to TSG	DLP-533
10		If Identified Facility Type Is D1 Channel Bank, Complete RC Worksheet Form 200 To Add New Trunks to TSG	DLP-534
11		If Identified Facility Type Is D2 Channel Bank, Complete RC Worksheet Form 200 To Add New Trunks to TSG	DLP-535
12		At RCDT, Enter Trunk-Type Recent Change Data Message (RCDM) From RC Worksheet Form 100 Into Current Translations (**OP:RCFORM 100**!)	DLP-536
13		Verify Current Translations Data for Establishing 2W TSG (**VER:TSG:CIN** a! Where a = TSG CIN)	DLP-537
14		On *4ESS* **SWITCH RECENT CHANGE LOG SHEET**, Place Check Mark in **RCDM STATE — ACT** and **VERIFY — MAC** Columns for RCDM Entered and Verified	—
15		If RC Worksheet Form 104 Was Completed To Add Additional TFNB to TSG, Perform The Following:	—
		1. At RCDT, Enter Trunk-Type RCDM From RC Worksheet Form 104 Into Current Translations (**OP:RCFORM 104**!)	DLP-536
		2. Verify Current Translations Data To Add TFNB to TSG (**VER:TFNB:TG** a! Where a = TG CIN)	DLP-516
		3. On *4ESS* **SWITCH RECENT CHANGE LOG SHEET**, Place Check Mark in **RCDM STATE — ACT** and **VERIFY — MAC** Columns for RCDM Entered and Verified	—
		4. If There Are Additional RC Worksheet Forms 104 to be Entered, Repeat From Step 15.1	—

DO THE ITEMS BELOW IN THE ORDER LISTED . . . . . FOR DETAILS, GO TO

	CMS CODE		
16		At RCDT, Enter Trunk-Type RCDM From RC Worksheet Form 200 Into Current Translations (OP:RCFORM 200!)	DLP-536
17		Determine Verification to be Performed	DLP-517
18		If Trunks Were Added (No Echo Suppressors), Verify Current Translations Data to Add Trunks to TSG (VER:TRK:TAN a-b!)	DLP-540
19		If Trunks Were Added (With Echo Suppressors), Verify Current Translations Data to Add Trunks to TSG (VER:TRK:TAN a-b!)	DLP-541
20		If Added Trunks Were Assigned to Far-End D1 or D2 Channel Banks, Verify Current Translations Data to Add Trunks to TSG (VER:TRK:TSI a,SPC b,LVL c,FTS d,FCHAN e-f,Dg!)	DLP-542
21		On *4ESS* **SWITCH RECENT CHANGE LOG SHEET**, Place Check Mark in **RCDM STATE — ACT** and **VERIFY — MAC** Columns for RCDM Entered and Verified	—
22		Select Next RC Worksheet Form 200 and Repeat From Step 16 Until all RCDMs Have Been Entered and Verified	—
23		Obtain Copy of all RCDM Printouts From Recent Change Record Channel (RCREC) Printer	—
24	350	Update MAC Circuit Order Status in CMS to Completed (*CPD*) for CONs Assigned	DLP-543
25		If Reinitialization File is Not Available, Establish Reinitialization File	DLP-544
26		Collect all RCDM Printouts and File in Reinitialization File in Order That They Were Entered Into System	—
27		Dispose of or File RC Worksheets per Local Procedure	—

DO THE ITEMS BELOW IN THE ORDER LISTED . . . . . FOR DETAILS, GO TO

	CMS CODE		
1	120/CON	If Not Already Activated, Activate Selected CON in CMS	DLP-519
2	250	Identify Range of Traffic Numbers (TFNs) Associated With Activated CON	DLP-520
3	402, 403,404	At CMS Channel, Obtain Printouts of CMS 402, 403 and 404 Displays	DLP-521
4		If Not Already in Existence, Establish *4ESS* **SWITCH RECENT CHANGE LOG BOOK**	DLP-557
5		Complete Entries On *4ESS* **SWITCH RECENT CHANGE LOG SHEET** To Establish 1WI TSG As Follows:	—
		1. Assign RC Order Number (ORNU) for RC Worksheet Form 101	DLP-522
		2. Under Column Heading **RCDM WORKSHEET**, Enter *101*	—
		3. Under Column Heading **DESCRIPTION OF RECENT CHANGE ORDER**, Enter *ESTABLISHES 1WI TSG* (CIN of TSG)	—
6		Obtain Blank Copy of RC Worksheet Form 101 and Complete Entries on Form 101 To Establish 1WI TSG As Follows:	—
		1. Following RC:TSG;NEW;OPT(IN1WAY), Enter *ACT*	—
		2. Following ORNU, Enter Assigned ORNU	—
	404	3. Following TSG, Enter TSG Circuit Identification Name (CIN) From Printout of CMS 404 Display for Activated CON	DLP-523
	404	4. Following TOT, Enter Type of Trunk Code (*CAMAA, CAMAO, ITAND, ITOLL, MISC, PBX, SECIT, TAND, TOLLC, TSPS, ITOP, ITOPB, STC, ETC, LCC* or *OCC*)	DLP-524
		5. Following QTFN, Enter *96*	—
		6. If Range of TFNs in Activated CON Exceeds 96, Perform the Following to Add Additional Traffic Number Block (TFNB) to Existing TSG:	—
		1. Complete Entries on *4ESS* **SWITCH RECENT CHANGE LOG SHEET** to Add Additonal TFNB to TSG as Follows:	—
		1. Assign RC ORNU for RC Worksheet Form 104	DLP-522
		2. Under Column Heading **RCDM WORKSHEET**, Enter *104*	—
		3. Under Column Heading **DESCRIPTION OF RECENT CHANGE ORDER**, Enter *ADDS ADDITIONAL TFNB TO 1WI TSG* (CIN of TSG)	—

DO THE ITEMS BELOW IN THE ORDER LISTED . . . . . FOR DETAILS, GO TO			
	CMS CODE		
6 (Contd)		2. Obtain Blank Copy of RC Worksheet Form 104 and Complete Entries on Form 104 to Add Additional TFNB to TSG	DLP-525
		3. If There Are Still Circuits To Be Entered, Repeat From Step 6.6 for Next Group of Circuits Up to a Quantity of 96	—
	404	7. Following **SAT**, Enter Whether Satellite Facilities Are Being Used (*Y* or *N*)	DLP-527
		8. Following **DOM**, Enter Domain Code (*POTS*, *SDNA*, *DEV*, *DED*, *VRFY*, *20-83*, *I56D*, *I64C*, *N64C*, *N64R*, *IVT APN*)	DLP-526
	404	9. Following **PSES**, Enter Prohibit Service Evaluation Code (*Y*, *N* or Blank)	DLP-528
		10. Following **GEOSEP**, Enter Geographical Traffic Separation Class Code (*0-31*)	DLP-554
		11. Following **CCIS2WRE**, Leave This Field Blank	—
	404	12. Following **RFA**, Enter Ring Forward Allowed Code (*Y* or *N*)	DLP-530
		Note: From Far-End Equipment Engineering, Cutover Coordinator, Circuit Provision Bureau, or Equivalent Source, Obtain Information for Steps 6.13 Through 6.25 To Be Entered on RC Worksheet Form 101	—
		13. Following **FENCLASS**, Enter Far-End Network Class Code (*ACCESA*, *ACCESO*, *PBX*, *POTS*, *ACCESI*, *CAMA*, *CMC*, *OWATS*, or Blank)	—
		14. Following **FENID**, Enter Far-End Network ID Code (Up to 6 Alphanumeric Characters or Blank)	—
		15. If FENCLASS Is ACCESA, Following **TFG** Enter Type of Feature Group Code (*B*, *C* or *D*)	—
		16. Following **ISC**, Enter Incoming Signaling Characteristics (*DPDDSD*, *DPIMADG*, *DPIMMED*, *DPIMPSW*, *DTMF*WK, *DTS*, *MFDDSD*, *MFOPWK*, *TOLLMFD*, *TSPSMFD*, *TSPSMFW* or *MFWINK*)	—
		17. Following **FESC6**, Enter Far-End 6-Digit Screening Code (*Y* or *N*)	—
		18. If TOT Entry Is PBX, Perform The Following on RC Worksheet Form 101; Otherwise, Leave Blank:	—
		1. Following **PBXESGD**, Enter PBX Expect Station Group Designation (*Y*, *N* or Blank)	—
		2. Following **PBXAW**, Enter PBX Answer Withheld Code (*Y*, *N* or Blank)	—

DO THE ITEMS BELOW IN THE ORDER LISTED . . . . . FOR DETAILS, GO TO

	CMS CODE		
6 (Contd)		19. Following **BN**, Enter Billing Number Code (3-, 4- or 10-Digit Number or Blank)	—
		20. Following **BRL**, Enter Billing Record Length Code (*S*, *L* or Blank)	—
		21. Following **EAS**, Enter Equal Access Signaling Code (*N*, *A*, *E*, *D* or *N*)	—
		22. Following **CMTYP**, Enter CAMA Type Code (*1*, *2* or Blank)	—
		23. Following **FAR4E**, Enter Whether Far End Is a *4ESS* Switch (*Y* or *N*)	—
	404	24. Determine Type of Pulsing (DP or MF)	DLP-531
		25. From Local Telephone Directory or Equivalent Source, Obtain Far-End Numbering Plan Area Code and Enter on RC Worksheet Form 101 Following **FENPA** (*200-999*)	_
		Note: From Routing Group Supervisor or Equivalent Source, Obtain Information for Steps 6.26 Through 6.27 and Enter on RC Worksheet Form 101	_
		26. Following **MTSC**, Enter Multiple Treatment Screening Class (*0-63*)	—
		27. Following **GNSC**, Enter Go/No Go Screening Class Code (*0-3*)	—
		Note: From MAC Supervisor or Equivalent Source, Obtain Information for Steps 6.28 Through 6.29 and Enter on RC Worksheet Form 101	_
		28. If ISC Entry Is DPIMADG, Following **ADIG** Enter A Digit Reconstruction Code (*0*, *2-9* or Blank)	_
		29. Following **INSEP**, Enter Incoming Traffic Separation Class Code (*0-255*)	—
		Note: From Trunk Operation Center (TOC) or Equivalent Source, Obtain Information for Steps 6.30 Through 6.31 and Enter on RC Worksheet Form 101	_
		30. Following **CAREA**, Enter Control Area Code (*0-9*)	—
		31. Following **CPOS**, Enter Control Position Code (*0-9*)	—
		32. Following **PCF**, Leave This Field Blank	—
		33. Following **AOPC**, Leave This Field Blank	—
		34. Following **DPC**, Leave This Field Blank	—

DO THE ITEMS BELOW IN THE ORDER LISTED . . . . . FOR DETAILS, GO TO

	CMS CODE		
6 (Contd)		35. Following **TSGBBC**, Leave This Field Blank	—
		36. Following **FEOFC**, Enter Far-End Office Code (*000-999* or Blank)	—
		37. Following **FELATA**, Enter Far-End Local Access And Transport Area Code (*000-999* or Blank)	—
		38. Following **IWZ1**, Enter International World Zone 1 Code (*Y*, *N* or Blank)	—
		39. Following **LSST**, Enter LATA/State Screening State Code (Two Alphabetic Characters or Blank)	_
		40. Following **MEM**, Enter Trunk Hunt With Memory Code (*Y*, *N* or Blank)	—
		41. Following **CBNPR**, Enter Calling Party Number/Billing Number Default Presentation Restriction Code (*Y*, *N* or Blank)	_
		42. Following **ITC**, Enter Incoming Trunk Subgroup Class (*0-3* or Blank)	—
		43. Following **NPARINH**, Enter Inhibit NPA Reconstruction Code (*Y*, *N* or Blank)	—
		44. Following **WATSBN**, Enter WATS Billing Number (10-Digit Number or Blank)	—
		45. Following **PSUUI**, Leave This Field Blank	—
		46. Following **SCFN**, Leave This Field Blank	—
		47. Following **OVLP**, Leave This Field Blank	—
		48. Following **APS**, Leave This Field Blank	—
		49. Following **PSATP**, Leave This Field Blank	—
		50. Following **DATA**, Leave This Field Blank	—
		51. Following **BFTIS**, Leave This Field Blank	—
		52. Following **BFTNI**, Leave This Field Blank	—
		53. Following **INCID**, Leave This Field Blank	—
		54. Following **SINDEX**, Enter Access Charge Verification Sampling Rate Index Code (*0-2*, *4*, *8*, *16*, *32*, *64* or Blank)	_
		55. Following **PBXNWW**, Enter PBX No Wait For Wink Code (*Y*, *N* or Blank)	—

DO THE ITEMS BELOW IN THE ORDER LISTED . . . . . FOR DETAILS, GO TO

	CMS CODE		
6 (Contd)		56. Following **IT**, Enter Intertoll Treatment Code (*Y*, *N* or Blank)	—
		57. Following **S1**, Enter Spare Code (*0-7* or Blank)	—
		58. Following **S2** through **S10**, Enter Spare Code (*Y*, *N* or Blank)	—
		59. If Performing Circuit Orders In an AT&T Switching Network, Complete the Following Entries On RC Worksheet Form 101:	—
		1. Following **GSDN**, Refer to PTG-4 for Valid Entries	—
		2. Following **GSDNPHSE**, Refer to PTG-4 for Valid Entries	—
		3. Following **BNPT**, Refer to PTG-4 for Valid Entries	—
		4. Following **WBNPT**, Refer to PTG-4 for Valid Entries	—
		5. Following **CMERGE**, Refer to PTG-4 for Valid Entries	—
		6. Following **PRIT**, Refer to PTG-4 for Valid Entries	—
		7. Following **MEGC**, Refer to PTG-4 for Valid Entries	—
		8. Following **SDNA**, Refer to PTG-4 for Valid Entries	—
		9. Following **OWAT**, Refer to PTG-4 for Valid Entries	—
		10. Following **CBC**, Refer to PTG-4 for Valid Entries	—
		11. Following **DDD**, Refer to PTG-4 for Valid Entries	—
		12. Following **IDDD**, Refer to PTG-4 for Valid Entries	—
		13. Following **FOSPS**, Refer to PTG-4 for Valid Entries	—
		14. Following **SDNPLAN**, Refer to PTG-4 for Valid Entries	—
		15. Following **SKSP**, Refer to PTG-4 for Valid Entries	—
		16. Following **HYBRD**, Refer to PTG-4 for Valid Entries	—
		17. Following **ITELCO**, Refer to PTG-4 for Valid Entries	—
		18. Following **S5DIG**, Refer to PTG-4 for Valid Entries	—
		19. Following **ANCR**, Refer to PTG-4 for Valid Entries	—

DO THE ITEMS BELOW IN THE ORDER LISTED . . . . . FOR DETAILS, GO TO			
	CMS CODE		
6 (Contd)		20. Following **ACCID**, Refer to PTG-4 for Valid Entries	—
		21. Following **ACCDTA**, Refer to PTG-4 for Valid Entries	—
		22. Following **PSTNG**, Refer to PTG-4 for Valid Entries	—
		23. Following **FLDSPR** Refer to PTG-4 for Valid Entries	—
		60. Following **REMARKS**, Enter *CON* Followed by Applicable CON Number	—
7	404	Determine Facility Type (D1, D2 or Other Than D1 or D2)	DLP-532
8		Obtain Blank Copy of RC Worksheet Form 200	—
9		If Identified Facility Type Is Other Than D1 or D2 Channel Bank, Complete RC Worksheet Form 200 To Add New Trunks to TSG	DLP-533
10		If Identified Facility Type Is D1 Channel Bank, Complete RC Worksheet Form 200 To Add New Trunks to TSG	DLP-534
11		If Identified Facility Type Is D2 Channel Bank, Complete RC Worksheet Form 200 To Add New Trunks to TSG	DLP-535
12		At RCDT, Enter Trunk-Type Recent Change Data Message (RCDM) From RC Worksheet Form 101 Into Current Translations (**OP:RCFORM 101!**)	DLP-536
13		Verify Current Translations Data for Establishing 1WI TSG (**VER:TSG:CIN** a! Where a = TSG CIN)	DLP-538
14		On *4ESS* **SWITCH RECENT CHANGE LOG SHEET**, Place Check Mark in **RCDM STATE — ACT** and **VERIFY — MAC** Columns for RCDM Entered and Verified	—
15		If RC Worksheet Form 104 Was Completed to Add Additional TFNB to TSG, Perform The Following:	—
		1. At RCDT, Enter Trunk-Type RCDM From RC Worksheet Form 104 Into Current Translations (**OP:RCFORM 104!**)	DLP-536
		2. Verify Current Translations Data to Add TFNB to TSG (**VER:TFNB:TG** a! Where a = TG CIN)	DLP-516
		3. On *4ESS* **SWITCH RECENT CHANGE LOG SHEET**, Place Check Mark in **RCDM STATE — ACT** and **VERIFY — MAC** Columns for RCDM Entered and Verified	—
		4. If There Are Additional RC Worksheet Forms 104 To Be Entered, Repeat From Step 15.1	—

DO THE ITEMS BELOW IN THE ORDER LISTED . . . . . FOR DETAILS, GO TO

	CMS CODE		
16		At RCDT, Enter Trunk-Type RCDM From RC Worksheet Form 200 Into Current Translations (**OP:RCFORM 200!**)	DLP-536
17		Determine Verification To Be Performed	DLP-517
18		If Trunks Were Added (No Echo Suppressors), Verify Current Translations Data to Add Trunks to TSG (**VER:TRK:TAN** a-b!)	DLP-540
19		If Trunks Were Added (With Echo Suppressors), Verify Current Translations For Adding Trunks to TSG (**VER:TRK:TAN** a-b!)	DLP-541
20		If Added Trunks Were Assigned to Far-End D1 or D2 Channel Banks, Verify Current Translations Data to Add Trunks to TSG (**VER:TRK:TSI** a,**SPC** b,**LVL** c,**FTS** d,**FCHAN** e-f,Dg!)	DLP-542
21		On *4ESS* **SWITCH RECENT CHANGE LOG SHEET**, Place Check Mark in **RCDM STATE — ACT** and **VERIFY — MAC** Columns for RCDM Entered and Verified	—
22		Select Next RC Worksheet Form 200 and Repeat From Step 16 Until All RCDMs Have Been Entered and Verified	—
23		Obtain Copy of All RCDM Printouts From Recent Change Record Channel (RCREC) Printer	—
24	350	Update MAC Circuit Order Status in CMS to Completed (*CPD*) for CONs Assigned	DLP-543
25		If Reinitialization File Is Not Available, Establish Reinitialization File	DLP-544
26		Collect All RCDM Printouts and File in Reinitialization File in Order That They Were Entered Into System	—
27		Dispose of or File RC Worksheets per Local Procedure	—

DO THE ITEMS BELOW IN THE ORDER LISTED . . . . . FOR DETAILS, GO TO

	CMS CODE		
1	120/CON	If Not Already Activated, Activate Selected CON in CMS	DLP-519
2	250	Identify Range of Traffic Numbers (TFNs) Associated With Activated CON	DLP-520
3	402 403,404	At CMS Channel, Obtain Printouts of CMS 402, 403 and 404 Displays	DLP-521
4		If Not Already in Existence, Establish *4ESS* **SWITCH RECENT CHANGE LOG BOOK**	DLP-557
5		Complete Entries On *4ESS* **SWITCH RECENT CHANGE LOG SHEET** To Establish 1WO TSG As Follows:	—
		1. Assign RC Order Number (ORNU) for RC Worksheet Form 102	DLP-522
		2. Under Column Heading **RCDM WORKSHEET**, Enter *102*	—
		3. Under Column Heading **DESCRIPTION OF RECENT CHANGE ORDER**, Enter *ESTABLISHES 1WO TSG* (CIN of TSG)	—
6		Obtain Blank Copy of RC Worksheet Form 102 and Complete Entries on Form 102 to Establish 1WO TSG As Follows:	—
		1. Following RC:TSG;NEW;OPT(OUT1WAY), Enter *ACT*	—
		2. Following ORNU, Enter Assigned ORNU	—
	404	3. Following TSG, Enter TSG Circuit Identification Name (CIN) From Printout of CMS 404 Display for Activated CON	DLP-523
	404	4. Following TOT, Enter Type of Trunk Code (*ITAND*, *ITOLL*, *MISC*, *SECIT*, *TAND*, *TOLLC*, *ITOP*, *PBX*, *STC*, *ETC*, *LCC* or *OCC*)	DLP-524
		5. Following QTFN, Enter *96*	—
		6. If Range of TFNs in Activated CON Exceeds 96, Perform the Following to Add Additional Traffic Number Block (TFNB) to Existing TSG:	—
		1. Complete Entries on *4ESS* **SWITCH RECENT CHANGE LOG SHEET** to Add Additional TFNB to TSG	—
		1. Assign RC ORNU for RC Worksheet Form 104	DLP-522
		2. Under Column Heading **RCDM WORKSHEET**, Enter *104*	—
		3. Under Column Heading **DESCRIPTION OF RECENT CHANGE ORDER**, Enter *ADDS ADDITIONAL TFNB TO 1WO TSG* (CIN of TSG)	—

DO THE ITEMS BELOW IN THE ORDER LISTED . . . . . FOR DETAILS, GO TO

	CMS CODE		
6 (Contd)		2. Obtain Blank Copy of RC Worksheet Form 104 and Complete Entries on Form 104 to Add Additional TFNB to TSG	DLP-525
		3. If There Are Still Circuits To Be Entered, Repeat From Step 6.6 for Next Group of Circuits Up to a Quantity of 96	–
	404	7. Following **SAT**, Enter Whether Satellite Facilities Are Being Used (*Y* or *N*)	DLP-527
	404	8. Following **DOM**, Enter Domain Code (*POTS*, *VRFY*, *20-83*, *SDNA*, *DED*, *DEV*, *I56D*, *I64C*, *N64C*, *N64R*, *IVT* or *APN*)	DLP-526
	404	9. Following **PSES**, Enter Prohibit Service Evaluation Code (*Y*, *N* or Blank)	DLP-528
		10. Following **RFMP**, Enter Ring Forward Miscellaneous Distributor Point Code (*Y*, *N* or Blank)	DLP-506
	404	11. Determine Type of Pulsing (MF or DP)	DLP-531
		12. From Local Telephone Directory or Equivalent Source, Obtain Far-End Numbering Plan Area Code and Enter on RC Worksheet Form 102 Following **FENPA** (*200-999*)	–
		Note: From Far-End Equipment Engineering, Cutover Coordinator, Circuit Provision Bureau, or Equivalent Source, Obtain Information for Steps 6.13 Through 6.20 and Enter on RC Worksheet Form 102	–
		13. Following **FENCLASS**, Enter Far-End Network Class Code (*ACCESA*, *ACCESI*, *ACCESO*, *OWATS*, *PBX*, *POTS*, *CMC* or Blank)	–
		14. Following **FENID**, Enter Far-End Network ID Code (Up to 6 Alphanumeric Characters or Blank)	–
		15. Following **OSC**, Enter Outgoing Signaling Characteristics (*DPDDSD*, *DPIMMED*, *DPWINK*, *ICOPNOP*, *MFDDSD*, *MFWINK*, *MIOPNOP*, *SIOPMFW*, *SIOPNOP*, *DTMFWK*, *TWOPDPD*, *TWOPDPI*, *TWOPDPW* or *TWOPMFW*)	–
		16. Following **DPSTOP** Enter Dial Pulse Stop Code (*Y*, *N* or Blank)	–
		17. Following **DELAY**, Enter Delay Interval (*20*, *80*, *220*, *70*, *140*, *210*, *280* or Blank)	–
		18. Following **MFSPEED**, Enter Multifrequency Speed Code (*7*, *10* or Blank)	–
		19. Following **BN**, Enter Billing Number Code (3-, 4- or 10-Digit Number or Blank)	–

DO THE ITEMS BELOW IN THE ORDER LISTED . . . . . FOR DETAILS, GO TO

	CMS CODE		
6 (Contd)		20. Following **BRL**, Enter Billing Record Length Code (*L*, *S* or Blank)	—
		Note: From Trunk Operation Center (TOC) or Equivalent Source, Obtain Information for Steps 6.21 Through 6.31 and Enter on RC Worksheet Form 102	_
		21. Following **NEOTR**, Enter Near-End Operational Test Responsibility Code (*Y* or *N*)	—
		22. Following **CAREA**, Enter Control Area Code (*0-9*)	—
		23. Following **CPOS**, Enter Control Position Code (*0-9*)	—
		24. Following **OTSTT**, Enter Operational Through Switch Test Type (*CTX2*, *CTX3*, *SXS*, *SYNC*, *T103* or *N*)	_
		25. If OTSTT Entry Is *N*, Following **OTSTN**, Leave This Field Blank; Otherwise, Enter Operational Through Switch Test Number (*000-9999999*)	_
		26. Following **XTSTT**, Enter Transmission Through Switch Test Type (*T*100, *T102*, *T105* or *N*)	_
		27. If XTSTT Entry Is *N*, Following **XTSTN**, Leave This Field Blank; Otherwise, Enter Transmission Through Switch Test Number (*000-9999999*)	_
		28. Following **OTMTT**, Enter Operational Terminating Test Type (*CTX2*, *CTX3*, *SXS*, *SYNC*, *T103*, or *N*)	_
		29. If OTMTT Entry Is *N*, Following **OTMIN**, Leave This Field Blank; Otherwise, Enter Operational Terminating Test Number (*000-9999999*)	_
		30. Following **XTMTT**, Enter Operational Terminating Test Type (*T100*, *T102*, *T105* or *N*)	—
		31. If XTMTT Entry Is *N*, Following **XTMTN**, Leave This Field Blank; Otherwise, Enter Transmission Terminating Test Number (*000-9999999*)	_
		32. Following **PCF**, Leave This Field Blank	—
		33. Following **AOPC**, Leave This Field Blank	—
		34. Following **DPC**, Leave This Field Blank	—
		35. Following **TFG**, Enter Type of Feature Group Code (*B*, *C*, *D* or Blank)	—

DO THE ITEMS BELOW IN THE ORDER LISTED . . . . . FOR DETAILS, GO TO

	CMS CODE		
6 (Contd)		36. Following **TSGBBC**, Leave This Field Blank	—
		37. Following **ACD**, Enter Automatic Call Distributor Code (*Y*, *N*, *T* or Blank)	—
		38. Following **FEOFC**, Enter Far-End Office Code (*000-999* or Blank)	—
		39. Following **FELATA**, Enter Far-End Local Access and Transport Area Code (*000-999* or Blank)	—
		40. Following **IWZ1**, Enter International World Zone 1 Code (*Y*, *N* or Blank)	—
		41. Following **CCIS2WRE**, Leave This Field Blank	—
		42. Following **XCPA**, Leave This Field Blank	—
		43. Following **MEM**, Enter Trunk Hunt With Memory Code (*Y*, *N* or Blank)	—
		44. Following **DNP**, Enter Dialed Number Preferred Code (*Y*, *N* or Blank)	—
		45. Following **PSOLI**, Leave This Field Blank	—
		46. Following **PSBN**, Leave This Field Blank	—
		47. Following **PSCPN**, Leave This Field Blank	—
		48. Following **ANISID**, Enter ANI/SID Request Code (*NONE*, *ANI*, *PANI*, *PSID*, *REQ*, *SID* or Blank)	—
		49. Following **WANISID**, Enter WATS Service ANI/SID Request Code (*NONE*, *ANI*, *PANI*, *PSID*, *REQ*, *SID* or Blank)	_
		50. Following **PSUUI**, Leave This Field Blank	—
		51. Following **SCFN**, Leave This Field Blank	—
		52. Following **APS**, Leave This Field Blank	—
		53. Following **CHNEG**, Leave This Field Blank	—
		54. Following **PSATP**, Leave This Field Blank	—
		55. Following **DOFP**, Enter Disable Outgoing Fraud Prevention Code (*Y* or *N*)	—
		56. Following **ONCID**, Leave This Field Blank	—
		57. Following **MULAW**, Leave This Field Blank	—

DO THE ITEMS BELOW IN THE ORDER LISTED . . . . . FOR DETAILS, GO TO			
	CMS CODE		
6 (Contd)		58. Following **CID**, Leave This Field Blank	—
		59. Following **SINDEX**, Enter Access Charge Verification Sampling Rate Index Code (*0-2*, *4*, *8*, *16*, *32*, *64* or Blank)	—
		60. Following **CODSC**, Enter CPE Outgoing Disconnect Code (*Y*, *N* or Blank)	—
		61. Following **S1**, Enter Spare Code (*Y*, *N* or Blank)	—
		62. Following **S2** through **S10**, Enter Spare Code (*Y*, *N* or Blank)	—
		63. If Performing Circuit Orders in an AT&T Switching Network, Complete the Following Entries on RC Worksheet Form 102:	_
		1. Following **VDCAP**, Refer to PTG-4 for Valid Entries	—
		2. Following **FEAREA**, Refer to PTG-4 for Valid Entries	—
		3. Following **FESWID**, Refer to PTG-4 for Valid Entries	—
		4. Following **EXSEQ**, Refer to PTG-4 for Valid Entries	—
		5. Following **FEPTY**, Refer to PTG-4 for Valid Entries	—
		6. Following **GSDN**, Refer to PTG-4 for Valid Entries	—
		7. Following **CMERGE**, Refer to PTG-4 for Valid Entries	—
		8. Following **PRIT**, Refer to PTG-4 for Valid Entries	—
		9. Following **BNPT**, Refer to PTG-4 for Valid Entries	—
		10. Following **SBRIV**, Refer to PTG-4 for Valid Entries	—
		11. Following **FOSPS**, Refer to PTG-4 for Valid Entries	—
		12. Following **CCIF**, Refer to PTG-4 for Valid Entries	—
		13. Following **D3DBN**, Refer to PTG-4 for Valid Entries	—
		14. Following **CSCSET**, Refer to PTG-4 for Valid Entries	—
		15. Following **ANCR**, Refer to PTG-4 for Valid Entries	—
		16. Following **ACCID**, Refer to PTG-4 for Valid Entries	—

DO THE ITEMS BELOW IN THE ORDER LISTED . . . . . FOR DETAILS, GO TO			
	CMS CODE		
6 (Contd)		17. Following **ACCDTA**, Refer to PTG-4 for Valid Entries	–
		18. Following **PSTNG**, Refer to PTG-4 for Valid Entries	–
		19. Following **FLDSPR**, Refer to PTG-4 for Valid Entries	–
		20. Following **TRIDX**, Refer to PTG-4 for Valid Entries	–
		64. Following **REMARKS**, Enter ***CON*** Followed by Applicable CON Number	–
7		Determine Facility Type (D1, D2, or Other Than D1 or D2)	DLP-532
8		Obtain Blank Copy of RC Worksheet Form 200	–
9		If Identified Facility Type Is Other Than D1 or D2 Channel Bank, Complete RC Worksheet Form 200 to Add New Trunks to TSG	DLP-533
10		If Identified Facility Type Is D1 Channel Bank, Complete RC Worksheet Form 200 to Add New Trunks to TSG	DLP-534
11		If Identified Facility Type Is D2 Channel Bank, Complete RC Worksheet Form 200 to Add New Trunks to TSG	DLP-535
12		At RCDT, Enter Trunk-Type Recent Change Data Message (RCDM) From RC Worksheet Form 102 Into Current Translations (**OP:RCFORM 102!**)	DLP-536
13		Verify Current Translations Data for Establishing 1WO TSG (**VER:TSG:CIN a!** Where a = TSG CIN)	DLP-539
14		On *4ESS* **SWITCH RECENT CHANGE LOG SHEET**, Place Check Mark in **RCDM STATE — ACT** and **VERIFY — MAC** Columns for RCDM Entered and Verified	–
15		If RC Worksheet Form 104 Was Completed to Add Additional TFNB to TSG, Perform the Following:	–
		1. At RCDT, Enter Trunk-Type RCDM From RC Worksheet Form 104 Into Current Translations (**OP:RCFORM 104!**)	DLP-536
		2. Verify Current Translations Data To Add TFNB to TSG (**VER:TFNB;TG a!** Where a = TG CIN)	DLP-516
		3. On *4ESS* **SWITCH RECENT CHANGE LOG SHEET**, Place Check Mark in **RCDM STATE — ACT** and **VERIFY — MAC** Columns for RCDM Entered and Verified	–
		4. If There Are Additional RC Worksheet Forms 104 To Be Entered, Repeat From Step 15.1	–

DO THE ITEMS BELOW IN THE ORDER LISTED . . . . . FOR DETAILS, GO TO

	CMS CODE		
16		At RCDT, Enter Trunk-Type RCDM From RC Worksheet Form 200 Into Current Translations (**OP:RCFORM 200!**)	DLP-536
17		Determine Verification To Be Performed	DLP-517
18		If Trunks Were Added (No Echo Suppressors), Verify Current Translations Data to Add Trunks to TSG (**VER:TRK:TAN a-b!**)	DLP-540
19		If Trunks Were Added (With Echo Suppressors), Verify Current Translations Data to Add Trunks to TSG (**VER:TRK:TAN a-b!**)	DLP-541
20		If Added Trunks Were Assigned to Far-End D1 or D2 Channel Banks, Verify Current Translations Data to Add Trunks to TSG (**VER:TRK:TSI a,SPC b,LVL c,FTS d,FCHAN e-f,Dg!**)	DLP-542
21		On *4ESS* **SWITCH RECENT CHANGE LOG SHEET**, Place Check Mark in **RCDM STATE — ACT** and **VERIFY — MAC** Columns for RCDMs Entered and Verified	—
22		Select Next RC Worksheet Form 200 and Repeat From Step 16 Until All RCDMs Have Been Entered and Verified	—
23		Obtain Copy of All RCDM Printouts From Recent Change Record Channel (RCREC) Printer	—
24	350	Update MAC Circuit Order Status in CMS to Completed (*CPD*) for CONs Assigned	DLP-543
25		If Reinitialization File Is Not Available, Establish Reinitialization File	DLP-544
26		Collect All RCDM Printouts and File in Reinitialization File in Order that They Were Entered Into System	—
27		Dispose of or File RC Worksheets per Local Procedure	—

DO THE ITEMS BELOW IN THE ORDER LISTED . . . . . FOR DETAILS, GO TO

	CMS CODE		
1	120/CON	If Not Already Activated, Activate Selected CON in CMS	DLP-519
2	250	Identify Range of Traffic Numbers (TFNs) Associated With Activated CON	DLP-520
3		Verify Trunk Subgroup (TSG) Circuit Identification Name (CIN) for Activated CON (**VER:TSG:CIN a!** Where a = TSG CIN)	DLP-509
4		If Not Already in Existence, Establish *4ESS* **SWITCH RECENT CHANGE LOG BOOK**	DLP-557
5		If There Is A TFN Ending With 01 In Identified Range of TFNs Associated With Activated CON, Perform the Following To Add Additional Traffic Number Block (TFNB) to Existing TSG:	—
		1. Complete Entries on *4ESS* **SWITCH RECENT CHANGE LOG SHEET** to Add Additional TFBN to TSG as Follows:	—
		1. Assign RC Order Number (ORNU) for RC Worksheet Form 104	DLP-522
		2. Under Column Heading **RCDM WORKSHEET**, Enter *104*	—
		3. Under Column Heading **DESCRIPTION OF RECENT CHANGE ORDER**, Enter *ADDS ADDITIONAL TFNB TO* (*1WI, 1WO,* or *2W*) *TSG* (CIN of TSG)	—
		2. Obtain Blank Copy of RC Worksheet Form 104 and Complete Entries on Form 104 To Add Additional TFNB to TSG	DLP-525
		3. If There Are Still Circuits To Be Entered, Repeat From Step 5.1 for Next Group of Circuits Up to Quantity of 96	—
6		Determine Facility Type (D1, D2 or Other Than D1 or D2)	DLP-532
7		Obtain Blank Copy of RC Worksheet Form 200	—
8		If Identified Facility Type Is Other Than D1 or D2 Channel Bank, Complete Entries on RC Worksheet Form 200 To Add New Trunks to TSG	DLP-533
9		If Identified Facility Type Is D1 Channel Bank, Complete Entries on RC Worksheet Form 200 To Add New Trunks to TSG	DLP-534
10		If Identified Facility Type Is D2 Channel Bank, Complete Entries on RC Worksheet Form 200 To Add New Trunks to TSG	DLP-535

ADD NON-CCS TRUNKS TO EXISTING DOMESTIC TSG

DO THE ITEMS BELOW IN THE ORDER LISTED . . . . . FOR DETAILS, GO TO

	CMS CODE		
11		If RC Worksheet Form 104 Was Completed To Add Additional TFNB to TSG, Perform The Following:	—
		1. At RCDT, Enter Trunk-Type Recent Change Data Message (RCDM) From RC Worksheet Form 104 Into Current Translations (**OP:RCFORM 104!**)	DLP-536
		2. Verify Current Translations Data To Add TFNB to TSG (**VER:TFNB:TG a!** Where a = TG CIN)	DLP-516
		3. On *4ESS* **SWITCH RECENT CHANGE LOG SHEET**, Place Check Mark in **RCDM STATE — ACT** and **VERIFY — MAC** Columns for RCDM Entered and Verified	—
		4. If There Are Additional RC Worksheet Forms 104 To Be Entered, Repeat From Step 11.1	—
12		At RCDT, Enter Trunk-Type RCDM From RC Worksheet Form 200 Into Current Translations (**OP:RCFORM 200!**)	DLP-536
13		Determine Verification To Be Performed	DLP-517
14		If Trunks Were Added (No Echo Suppressors), Verify Current Translations Data to Add Trunks to TSG (**VER:TRK:TAN a-b!**)	DLP-540
15		If Trunks Were Added (With Echo Suppressors), Verify Current Translations Data to Add Trunks to TSG (**VER:TRK:TAN a-b!**)	DLP-541
16		If Added Trunks Were Assigned to Far-End D1 or D2 Channel Banks, Verify Current Translations Data to Add Trunks to TSG (**VER:TRK:TSI a,SPC b,LVL c,FTS d,FCHAN e-f,Dg!**)	DLP-542
17		On *4ESS* **SWITCH RECENT CHANGE LOG SHEET**, Place Check Mark in **RCDM STATE — ACT** and **VERIFY — MAC** Columns for RCDM Entered and Verified	—
18		Select Next RC Worksheet Form 200 and Repeat From Step 12 Until All RCDMs Have Been Entered and Verified	—
19		Obtain Copy of All RCDM Printouts From Recent Change Record Channel (RCREC) Printer	—
20	350	Update MAC Circuit Order Status in CMS to Completed (*CPD*) for CONs Assigned	DLP-543
21		If Reinitialization File Is Not Available, Establish Reinitialization File	DLP-544
22		Collect All RCDM Printouts and File in Reinitialization File in Order That They Were Entered Into System	—
23		Dispose of or File RC Worksheets per Local Procedure	—

DO THE ITEMS BELOW IN THE ORDER LISTED . . . . . FOR DETAILS, GO TO

	CMS CODE		
1	120/CON	If Not Already Activated, Activate Selected CON in CMS	DLP-519
2	250	Identify Range of Traffic Numbers (TFNs) Associated With Activated CON	DLP-520
3		Verify Trunk Subgroup (TSG) Circuit Identification Name (CIN) for Activated CON (**VER:TSG:CIN a!** Where a = TSG CIN)	DLP-509
4		If Not Already in Existence, Establish *4ESS* **SWITCH RECENT CHANGE LOG BOOK**, Obtain Blank Copy of *4ESS* **SWITCH RECENT CHANGE LOG SHEET**	DLP-557
5		Complete Entries on *4ESS* **SWITCH RECENT CHANGE LOG SHEET** To Delete Trunks From TSG as Follows:	—
		1. Assign RC Order Number (ORNU) for RC Worksheet Form 202	DLP-522
		2. Under Column Heading **RCDM WORKSHEET**, Enter *202*	—
		3. Under Column Heading **DESCRIPTION OF RECENT CHANGE ORDER**, Enter *DELETES* (*1WI, 1WO,* or *2W*) *TRUNKS FROM* (CIN of TSG) *TSG*	—
6		Obtain Blank Copy of RC Worksheet Form 202 and Complete Entries on Form 202 To Delete Trunks From TSG As Follows:	—
		1. Following **RC:TRK;OUT;**, Enter *ACT*	—
		2. Following **ORNU**, Enter Assigned ORNU	—
		3. Following **TSG**, Enter TSG Circuit Identification Name (CIN) From Display of TSG Characteristics for Activated CON	—
		4. Determine Quantity of Trunks (QTRK) To Be Deleted and First Traffic Number (FTFN) in Group of Trunks	—
		5. Under **QTRK**, Enter Quantity of Trunks To Be Deleted	—
		6. Under **FTFN**, Enter First TFN in Group of Trunks To Be Deleted	—
		7. Following **REMARKS**, Enter *CON* Followed by Applicable CON Number	—
		8. If There Are Still Trunks To Be Deleted, Repeat From Step 5	—

COMPLETE RC WORKSHEETS TO DELETE TRUNKS FROM TSG

DO THE ITEMS BELOW IN THE ORDER LISTED . . . . . FOR DETAILS, GO TO

	CMS CODE		
7		If There Is A TFN Ending With 01 in Identified Range of TFNs Associated With Activated CON, Perform The Following To Delete Traffic Number Block (TFNB) From TSG:	_
		1. Complete Entries on *4ESS* **SWITCH RECENT CHANGE LOG SHEET** to Delete TFBN From TSG as Follows:	_
		1. Assign RC ORNU for RC Worksheet Form 105	DLP-522
		2. Under Column Heading **RCDM WORKSHEET**, Enter *105*	_
		3. Under Column Heading **DESCRIPTION OF RECENT CHANGE ORDER**, Enter *DELETES TFNB FROM* (CIN of TSG) *TSG*	_
		2. Obtain Blank Copy of RC Worksheet Form 105 and Complete Entries on Form 105 As Follows:	_
		1. Following RC:TSG;CHG;OPT(OUTTFNB), Enter *ACT*	_
		2. Following ORNU, Enter Assigned ORNU	_
	404	3. Following TSG, Enter TSG CIN From Display of TSG Characteristics for Activated CON	_
		4. Following FTFN, Enter TFN Ending With 01	_
		5. Following REMARKS, Enter *CON* Followed by Applicable CON Number	_
		3. If There Are Still TFNBs To Be Deleted, Repeat From Step 7.1	_
8		Arrange All RC Worksheets in Ascending Order Beginning With Lowest RC ORNU and Retain for Later Use	_

DO THE ITEMS BELOW IN THE ORDER LISTED . . . . . FOR DETAILS, GO TO

	CMS CODE		
1	120/CON	If Not Already Activated, Activate Selected CON in CMS	DLP-519
2	250	Identify Range of Traffic Numbers (TFNs) Associated With Activated CON	DLP-520
3		Verify Trunk Subgroup (TSG) Circuit Identification Name (CIN) for Activated CON (**VER:TSG:CIN a!** Where a = TSG CIN)	DLP-509
4		If Not Already in Existence, Establish *4ESS* **SWITCH RECENT CHANGE LOG BOOK**, Obtain Blank Copy of *4ESS* **SWITCH RECENT CHANGE LOG SHEET**	DLP-557
5		Complete Entries On *4ESS* **SWITCH RECENT CHANGE LOG SHEET** To Delete Trunks From TSG As Follows:	—
		1. Assign RC Order Number (ORNU) for RC Worksheet Form 202	DLP-522
		2. Under Column Heading **RCDM WORKSHEET**, Enter *202*	—
		3. Under Column Heading **DESCRIPTION OF RECENT CHANGE ORDER**, Enter *DELETES* (*1WI*, *1WO* or *2W*) *TRUNKS FROM* (CIN of TSG) *TSG*	—
6		Obtain Blank Copy of RC Worksheet Form 202 And Complete Entries On Form 202 To Delete Trunks From TSG As Follows:	—
		1. Following **RC:TRK;OUT;**, Enter *ACT*	—
		2. Following **ORNU**, Enter Assigned ORNU	—
		3. Following **TSG**, Enter TSG Circuit Identification Name (CIN) From Display of TSG Characteristics for Activated CON	—
		4. Determine Quantity of Trunks (QTRKs) To Be Deleted and First Traffic Number (FTFN) in Group of Trunks	—
		5. Under **QTRK**, Enter Quantity of Trunks To Be Deleted	—
		6. Under **FTFN**, Enter First TFN in Group of Trunks To Be Deleted	—
		7. Following **REMARKS**, Enter *CON* Followed by Applicable CON Number	—
		8. If There Are Still Trunks To Be Deleted, Repeat From Step 5	—
7		Request That Network Manager Release All Controls On TSG To Be Deleted	—

DO THE ITEMS BELOW IN THE ORDER LISTED . . . . . FOR DETAILS, GO TO			
	CMS CODE		
8		If TSG Is on Any Active Traffic and Plant Measurement Reports (1 Through 23), Request Traffic and Plant Measurement Report Personnel To Delete TSG From Reports	_
9		At Recent Change Display Terminal (RCDT), Obtain Display of Routing Data Block Indexes (RDBIs) for RDBs Containing TSG To Be Deleted (VER:RDBLIST;ALL:TSG a! Where a = TSG CIN)	DLP-518
10		Complete Entries on *4ESS* **SWITCH RECENT CHANGE LOG SHEET** To Delete Routing Data Blocks (RDBs) Associated With TSG As Follows:	_
		1. Assign RC ORNU for RC Worksheet Form 510	DLP-522
		2. Under Column Heading **RCDM WORKSHEET**, Enter *510*	_
		3. Under Column Heading **DESCRIPTION OF RECENT CHANGE ORDER**, Enter *DELETES RDBs ASSOCIATED WITH* (CIN of TSG) *TSG*	_
11		Obtain Blank Copy of RC Worksheet Form 510 and Complete Entries on Form 510 To Delete RDBs As Follows:	_
		1. Following RC:RDB;OUT;, Enter *ACT*	_
		2. Following RDBI, Enter Routing Data Block Index To Be Deleted (*4-8191*)	_
		3. Following ORNU, Enter Assigned ORNU	_
		4. Following REMARKS, Enter *CON* Followed by Applicable CON Number	_
		5. If There Are Additional RDBs To Be Deleted, Repeat From Step 10	_
12		Complete Entries on *4ESS* **SWITCH RECENT CHANGE LOG SHEET** To Discontinue TSG As Follows:	_
		1. Assign RC ORNU for RC Worksheet Form 106	DLP-522
		2. Under Column Heading **RCDM WORKSHEET**, Enter *106*	_
		3. Under Column Heading **DESCRIPTION OF RECENT CHANGE ORDER**, Enter *DELETES* (*1WI*, *1WO* or *2W*) *TSG* (CIN of TSG)	_

DO THE ITEMS BELOW IN THE ORDER LISTED . . . . . FOR DETAILS, GO TO

	CMS CODE		
13		Obtain Blank Copy of RC Worksheet Form 106 and Complete Entries on Form 106 To Discontinue TSG As Follows:	—
		1. Following **RC:TSG;OUT;**, Enter ***ACT***	—
		2. Following **ORNU,** Enter Assigned ORNU	—
		3. Following **TSG,** Enter TSG CIN From Display of TSG Characteristics for Activated CON	—
		4. Following **REMARKS**, Enter ***CON*** Followed by Applicable CON Number	—
14		Arrange All RC Worksheets in Ascending Order Beginning With Lowest RC ORNU and Retain for Later Use	—

DO THE ITEMS BELOW IN THE ORDER LISTED . . . . . FOR DETAILS, GO TO

	CMS CODE		
1		For Activity Due on Date Specified by TOC, Obtain Recent Change (RC) Worksheets for Applicable CON	—
2		Select RC Worksheet With Lowest RC Order Number (ORNU)	—
3		At Recent Change Display Terminal (RCDT), Enter Trunk Type RCDM From RC Worksheet Into Current Translations (**OP:RCFORM a!** Where a = Form Number Being Entered)	DLP-536
4		If Traffic Number Block (TFNB) Was Deleted From TSG (Form 105), Verify Current Translations Data To Delete TFNB From TSG (**VER:TFNB:TG a!** Where a = TG CIN)	DLP-510
5		If Trunk Subgroup (TSG) Was Deleted (Form 106), Verify Current Translations Data To Delete TSG (**VER:TSG:CIN a!** Where a = TSG CIN)	DLP-511
6		If Message or VFL Trunks Were Deleted (Form 202), Verify Current Translations Data To Delete Trunks From TSG (**VER:TSG:CIN a!** Where a = TSG CIN)	DLP-512
7		If Routing Data Block (RDB) Was Deleted (Form 510), Verify Current Translations Data To Delete RDB (**VER:RDBLIST;ALL:TSG a!** Where a = TSG CIN)	DLP-558
8		On *4ESS* **SWITCH RECENT CHANGE LOG SHEET**, Place Check Mark in **RCDM STATE — ACT** and **VERIFY — MAC** Columns for RCDM Entered and Verified	—
9		Select Next RC Worksheet in Sequence and Repeat From Step 3 Until All RCDMs Have Been Entered and Verified	—
10		Obtain Copy of All RCDM Printouts From Recent Change Record Channel (RCREC) Printer	—
11	350	Update MAC Circuit Order Status in CMS to Completed (*CPD*) for CONs Assigned	DLP-543
12		If Reinitialization File Is Not Available, Establish Reinitialization File	DLP-544
13		Collect All RCDM Printouts and File in Reinitialization File in Order That They Were Entered Into System	—
14		Dispose of or File RC Worksheets Per Local Procedure	—

DO THE ITEMS BELOW IN THE ORDER LISTED . . . . . FOR DETAILS, GO TO

	CMS CODE		
1		Obtain Current CMS 961 Report (CMS 206 Worklist Sorted by Due Date)	DLP-553
2		On CMS 961 Report, Locate CON To Be Canceled	—
3		On CMS 961 Report Under Column Heading **MAC STATUS**, Identify Status of CON To Be Canceled (RC or CPD)	—
4		If Identified MAC Status Is RC, Draw Line Through CMS 961 Report Entry for CON To Be Canceled	—
5	120/CON	Activate Selected CON in CMS	DLP-519
6	405	At CMS Channel Identify Circuit Order Action Code (A or D)	DLP-508
7		If Identified MAC Status Is CPD and Circuit Order Action Code Is D (Delete), Perform The Following:	—
		1. Dispose of Any Recent Change (RC) Worksheets Prepared for CON To Be Canceled	—
		2. Delete Recent Change Entries From *4ESS* **SWITCH RECENT CHANGE LOG SHEET**	—
8		If Identified MAC Status Is CPD and Circuit Order Action Code Is A (Add), Perform The Following:	—
	250	1. Identify Range of Traffic Numbers (TFNs) Associated With Activated CON	DLP-520
	404	2. At CMS Channel, Obtain Printout of CMS 404 Display	DLP-545
		3. If Not Already in Existence, Establish *4ESS* **SWITCH RECENT CHANGE LOG BOOK**	DLP-556
		4. Complete Entries On *4ESS* **SWITCH RECENT CHANGE LOG SHEET** To Delete Trunks From TSG As Follows:	—
		1. Assign RC Order Number (ORNU) for RC Worksheet Form 202	DLP-522
		2. Under Column Heading **RCDM WORKSHEET**, Enter *202*	—
		3. Under Column Heading **DESCRIPTION OF RECENT CHANGE ORDER,** Enter *DELETES* (*1WI*, *1WO* or *2W*) *TRUNKS FROM TSG* (CIN of TSG)	—
		5. Obtain Blank Copy of RC Worksheet Form 202 and Complete Entries on Form 202 To Delete Trunks From TSG	DLP-551

DO THE ITEMS BELOW IN THE ORDER LISTED . . . . . FOR DETAILS, GO TO

	CMS CODE		
8 (Contd)		6. If There Are Still Trunks To Be Deleted, Repeat From Step 8.4	—
		7. If There Is a TFN Ending With 01 In Identified Range of TFNs, Perform The Following To Delete Traffic Number Block (TFNB) From TSG:	—
		1. Complete Entries on *4ESS* **SWITCH RECENT CHANGE LOG SHEET** to Delete TFBN From TSG As Follows:	—
		1. Assign RC ORNU for RC Worksheet Form 105	DLP-522
		2. Under Column Heading **RCDM WORKSHEET**, Enter *105*	—
		3. Under Column Heading **DESCRIPTION OF RECENT CHANGE ORDER**, Enter *DELETES TFNB FROM TSG* (CIN of TSG)	—
		2. Obtain Blank Copy of RC Worksheet Form 105 and Complete Entries on Form 105 To Delete TFNB From TSG	DLP-552
		3. If There Are Still TFNBs To Be Deleted, Repeat From Step 8.7	—
		8. At RCDT, Determine Trunk Status (**VER:TSG:CIN a!** Where a = TSG CIN)	DLP-513
		9. If Trunk Status Is Other Than Circuit Administrative Disabled (CAD/DSA), Request TOC to CAD/DSA All Trunks To Be Deleted	—
		10. When All Trunks Have Been Placed in CAD/DSA State, Perform The Following:	—
		1. Select RC Worksheet Form 202 With Lowest ORNU	—
		2. At RCDT, Enter Trunk Type Recent Change Data Message (RCDM) From RC Worksheet Form 202 (**OP:RCFORM 202!**)	DLP-536
		3. Verify Current Translations Data To Delete Trunks From TSG (**VER:TSG:CIN a!** Where a = TSG CIN)	DLP-512
		4. On *4ESS* **SWITCH RECENT CHANGE LOG SHEET**, Place Check Mark In **RCDM STATE — ACT** and **VERIFY — MAC** Columns for RCDM Entered and Verified	—
		5. Select Next RC Worksheet Form 202 and Repeat From Step 8.10.2 Until All RCDMs Have Been Entered and Verified	—

DO THE ITEMS BELOW IN THE ORDER LISTED . . . . . FOR DETAILS, GO TO

	CMS CODE		
8 (Contd)		11. If RC Worksheet Form 105 Was Completed To Delete TFNB From TSG, Perform The Following:	—
		1. Select RC Worksheet Form 105 With Lowest ORNU	—
		2. At RCDT, Enter Trunk Type RCDM From RC Worksheet Form 105 (**OP:RCFORM 105!**)	DLP-536
		3. Verify Current Translations Data To Delete TFNB From TSG (**VER:TSG:CIN a!** Where a = TSG CIN)	DLP-510
		4. On *4ESS* **SWITCH RECENT CHANGE LOG SHEET**, Place Check Mark in **RCDM STATE — ACT** and **VERIFY — MAC** Columns for RCDM Entered and Verified	—
		5. Select Next RC Worksheet Form 105 and Repeat From Step 8.11.2 Until All RCDMs Have Been Entered and Verified	—
9		Obtain Copy of All RCDM Printouts From Recent Change Record Channel (RCREC) Printer	—
10	350,351	Update MAC Circuit Order Status in CMS to Completed (*CPD*)	DLP-543
11		If Reinitialization File Is Not Available, Establish Reinitialization File	DLP-544
12		Collect All RCDM Printouts and File in Reinitialization File in Order That They Were Entered Into System	—
13		Dispose of or File RC Worksheets per Local Procedure	—

DO THE ITEMS BELOW IN THE ORDER LISTED . . . . . FOR DETAILS, GO TO

	CMS CODE		
1	120/CON	If Not Already Activated, Activate Selected CON in CMS	DLP-519
2	250	Identify Range of Traffic Numbers (TFNs) Associated With Activated CON	DLP-520
3	402 403,404	At CMS Channel, Obtain Printouts of CMS 402, 403 and 404 Displays	DLP-521
4		If Not Already in Existence, Establish *4ESS* **SWITCH RECENT CHANGE LOG BOOK**	DLP-557
5		Complete Entries on *4ESS* **SWITCH RECENT CHANGE LOG SHEET** to Establish 2W International TSG As Follows:	—
		1. Assign RC Order Number (ORNU) for RC Worksheet Form 100	DLP-522
		2. Under Column Heading **RCDM WORKSHEET**, Enter *100*	—
		3. Under Column Heading **DESCRIPTION OF RECENT CHANGE ORDER**, Enter *ESTABLISHES 2W INTERNATIONAL TSG* (CIN of TSG)	—
6		Obtain Blank Copy of RC Worksheet Form 100 and Complete Entries on Form 100 to Establish 2W International TSG As Follows:	—
		1. Following RC:TSG;NEW;OPT(TWOWAY), Enter *ACT*	—
		2. Following ORNU, Enter Assigned ORNU	—
	404	3. Following TSG, Enter TSG Circuit Identification Name (CIN) From Printout of CMS 404 Display for Activated CON	DLP-523
		4. Following TOT, Enter Type of Trunk (TOT) Code (*INTL*, *INTLO* or *ITOPA*)	DLP-502
		5. Following QTFN, Enter *96*	—
		6. If Range of TFNs in Activated CON Exceeds 96, Perform The Following to Add Additional Traffic Number Block (TFNB) to Existing TSG:	—
		1. Complete Entries on *4ESS* **SWITCH RECENT CHANGE LOG SHEET** to Add Additional TFNB to TSG as Follows:	—
		1. Assign RC ORNU for RC Worksheet Form 104	—
		2. Under Column Heading **RCDM WORKSHEET**, Enter *104*	—

DO THE ITEMS BELOW IN THE ORDER LISTED . . . . . FOR DETAILS, GO TO			
	CMS CODE		
6 (Contd)		3. Under Column Heading **DESCRIPTION OF RECENT CHANGE ORDER**, Enter *ADDS ADDITIONAL TFNB TO 2W INTERNATIONAL TSG* (CIN of TSG)	–
		2. Obtain Blank Copy of RC Worksheet Form 104 and Complete Entries on Form 104 to Add Additional TFNB to TSG	DLP-525
		3. If There Are Still Circuits To Be Entered, Repeat From Step 6.6 For Next Group of Circuits Up To A Quantity of 96	–
	404	7. Following **SAT**, Enter Whether Satellite Facilities Are Being Used (*Y* or *N*)	DLP-550
		8. Following **DOM**, Enter *INTL*	–
	404	9. Following **PSES**, Enter Prohibit Service Evaluation Code (*Y*, *N* or Blank)	DLP-528
	404	10. Following **REV**, Enter Reverse Hunt Code (*Y* or *N*)	DLP-529
		11. Following **RFA**, Enter *Y*	–
		12. Following **ISC**, Enter *CCITT5*	–
		13. Following **OSC**, Enter *CCITT5*	–
		14. Following **FENPA**, Enter Far-End Numbering Plan Area Code (2-9 or 20-99)	DLP-505
		15. Following **RFMP**, Enter Ring Forward Miscellaneous Distributor Point Code (*Y*, *N* or Blank)	DLP-506
		16. Following **GEOSEP**, Enter *O* (Zero)	–
		17. Following **BN**, Enter Billing Number Code (Three, Four or Ten Digit Number or Leave Blank)	–
		18. Following **BRL**, Enter Billing Record Length Code (*L*, *S* or Blank)	–
		19. Following **EAS**, Enter Equal Access Signaling Code (*N*, *A*, *E*, *D* or *R*)	–
		20. Following **ACD**, Enter Automatic Call Distributor Code (*Y*, *N*, *T* or Blank)	–
		21. Following **ADIG**, Enter A Digit Reconstruction Code (*O*, *2-9* or Blank)	–
		22. Following **CCIS2WRE**, Leave This Field Blank	–
		23. Following **XCPA**, Leave This Field Blank	–
		24. Following **PBXESGD**, Leave This Field Blank	–

DO THE ITEMS BELOW IN THE ORDER LISTED . . . . . FOR DETAILS, GO TO

	CMS CODE		
6 (Contd)		25. Following **PBXAW**, Leave This Field Blank	—
		26. Following **FAR4E**, Enter ***N***	—
		27. Following **DPSTOP**, Leave This Field Blank	—
	404	28. Identify Far-End Office Class Code	DLP-507
		29. If Identified Far-End Office Class Code Is 1 to 4, Perform The Following:	—
		1. Following **OTSTT**, Enter ***ATMB***	—
		2. Following **XTSTT**, Enter ***ATMA***	—
		3. Following **OTMTT**, Enter ***N***	—
		4. Following **XTMTT**, Enter ***N***	—
		5. Following **OTSTN**, Enter ***062***	—
		6. Following **XTSTN**, Enter Transmission Through Switch Test Number (***000 - 9999999***)	—
		7. Following **OTMTN**, Leave This Field Blank	—
		8. Following **XTMTN**, Leave This Field Blank	—
		30. If Identified Far-End Office Class Code Is Class 5, Perform the Following:	—
		1. Following **OTMTT**, Enter ***ATMC***	—
		2. Following **OTMTN**, Enter ***063***	—
		3. Following **OTSTT**, Enter ***N***	—
		4. Following **XTSTT**, Enter ***N***	—
		5. Following **OTSTN**, Leave This Field Blank	—
		6. Following **XTSTN**, Leave This Field Blank	—
		7. Following **XTMTT**, Enter Transmission Terminating Test Type (***T100***, ***T102***, ***T105*** or ***N***)	—
		8. If **XTMTT** Entry Is ***N***, Following **XTMTN** Leave This Field Blank, Otherwise Enter Transmission Terminating Test Number (***000 - 9999999***)	—
		31. Following **GLARE**, Leave This Field Blank	—

DO THE ITEMS BELOW IN THE ORDER LISTED . . . . . FOR DETAILS, GO TO

	CMS CODE		
6 (Contd)		32. Following **DELAY**, Enter *80*	—
		33. Following **MFSPEED**, Enter *10*	—
		34. Following **DNHR**, Enter *N*	—
		Note: From Circuit Provision Bureau or Equivalent Source, Obtain Information for Steps 6.35 Through 6.38 To Be Entered on RC Worksheet Form 100	—
		35. Following **FENCLASS**, Enter Far-End Network Class Code (*ACCESA*, *ACCESI*, *INTL*, *ACCESO*, *CMC*, *OWATS*, *PBX*, *POTS* or Blank)	—
		36. Following **FENID**, Enter Far-End Network ID (One to Six Alphanumeric Characters or Blank)	—
		37. Following **TFG**, Leave This Field Blank	—
		38. Following **FESC6**, Enter Whether Far-End Provides 6-Digit Screening (*Y* or *N*)	—
		Note: From Routing Group Supervisor or Equivalent Source, Obtain Information for Steps 6.39 Through 6.41 To Be Entered on RC Worksheet Form 100	—
		39. Following **MTSC**, Enter Multiple Treatment Screening Class Code (*0-63*)	—
		40. Following **GNSC**, Enter Go/No Go Screening Class Code (*0-3*)	—
		41. Following **INSEP**, Enter Incoming Traffic Separation Class Code (*0-255*)	—
		Note: From Trunk Operations Center (TOC) or Equivalent Source, Obtain Information for Steps 6.42 Through 6.44 To Be Entered on RC Worksheet Form 100	—
		42. Following **NEOTR**, Enter Near-End Operational Test Responsibility (*Y* or *N*)	—
		43. Following **CAREA**, Enter Control Area (*0-9*)	—
		44. Following **CPOS**, Enter Control Position (*0-9*)	—
		45. Following **PCF**, Leave This Field Blank	—
		46. Following **ADPC**, Leave This Field Blank	—
		47. Following **DPC**, Leave This Field Blank	—
		48. Following **TSGBBC**, Leave This Field Blank	—
		49. Following **FEOFC**, Enter Far-End Office Code (*000-999* or Blank)	—

DO THE ITEMS BELOW IN THE ORDER LISTED . . . . . FOR DETAILS, GO TO

	CMS CODE		
6 (Contd)		50. Following **FELATA**, Enter Far-End Local Access And Transport Area Code (*000-999* or Blank)	—
		51. Following **IWZ1**, Enter International World Zone 1 Code (*Y*, *N* or Blank)	—
		52. Following **LSST**, Enter LATA/State Screening State Code (Two Alphabetic Characters or Blank)	_
		53. Following **MEM**, Enter Trunk Hunt With Memory Code (*Y*, *N* or Blank)	—
		54. Following **CBNPR**, Enter Calling Party Number/Billing Number Default Presentation Restriction Code (*Y*, *N* or Blank)	_
		55. Following **DNP**, Enter Dialed Number Preferred Code (*Y*, *N* or Blank)	—
		56. Following **PSOLI**, Leave This Field Blank	—
		57. Following **ITC**, Enter Incoming Trunk Subgroup Class (*0-3* or Blank)	—
		58. Following **NPARINH**, Enter Inhibit NPA Reconstruction Code (*Y*, *N* or Blank)	—
		59. Following **WATSBN**, Enter WATS Billing Number (10-Digit Number or Blank)	—
		60. Following **PSBN**, Enter Prohibit Sending Billing Number Code (*Y*, *N* or Blank)	—
		61. Following **PSCPN**, Enter Prohibit Sending Calling Party Number Code (*Y*, *N* or Blank)	—
		62. Following **ANISID**, Enter ANI/SID Request Code (*NONE*, *ANI*, *PANI*, *PSID*, *REQ*, *SID* or Blank)	—
		63. Following **WANISID**, Enter WATS Service ANI/SID Request Code (*NONE*, *ANI*, *PANI*, *PSID*, *REQ*, *SID* or Blank)	_
		64. Following **PSUUI**, Leave This Field Blank	—
		65. Following **SCFN**, Leave This Field Blank	—
		66. Following **OVLP**, Leave This Field Blank	—
		67. Following **APS**, Enter *ACCUNET* Packet Service Code (*Y*, *N* or Blank)	—
		68. Following **CHNEG**, Leave This Field Blank	—
		69. Following **PSATP**, Leave This Field Blank	—
		70. Following **DOFP**, Enter Disable Outgoing Fraud Prevention Code (*Y* or *N*)	—
		71. Following **DATA**, Leave This Field Blank	—
		72. Following **BFTIS**, Leave This Field Blank	—

DO THE ITEMS BELOW IN THE ORDER LISTED . . . . . FOR DETAILS, GO TO

	CMS CODE		
6 (Contd)		73. Following **BFTNI**, Leave This Field Blank	—
		74. Following **INCID**, Leave This Field Blank	—
		75. Following **ONCID**, Leave This Field Blank	—
		76. Following **MULAW**, Leave This Field Blank	—
		77. Following **CID**, Leave This Field Blank	—
		78. Following **SINDEX**, Enter Access Charge Verification Sampling Rate Index Code (*0-2*, *4*, *8*, *16*, *32*, *64* or Blank)	_
		79. Following **CODSC**, Enter CPE Outgoing Disconnect Code (*Y* or *N*)	—
		80. Following **IT**, Enter Intertoll Treatment Code (*Y*, *N* or Blank)	—
		81. Following **PBXNWW**, Enter PBX No Wait for Wink Code (*Y*, *N* or Blank)	—
		82. Following **S1**, Enter Spare Code (*0-7* or Blank)	_
		83. Following **S2** through **S10**, Enter Spare Code (*Y*, *N* or Blank)	
		84. If Performing Circuit Orders in an AT&T Switching Network, Complete the Following Entries On RC Worksheet:	— —
		1. Following **VDCAP**, Refer to PTG-4 for Valid Entries	—
		2. Following **DATAF**, Refer to PTG-4 for Valid Entries	—
		3. Following **FEAREA**, Refer to PTG-4 for Valid Entries	—
		4. Following **FESWID**, Refer to PTG-4 for Valid Entries	—
		5. Following **EXSEQ**, Refer to PTG-4 for Valid Entries	—
		6. Following **FEPTY**, Refer to PTG-4 for Valid Entries	—
		7. Following **GSDN**, Refer to PTG-4 for Valid Entries	—
		8. Following **GSDNPHSE**, Refer to PTG-4 for Valid Entries	—
		9. Following **SBRIV**, Refer to PTG-4 for Valid Entries	—
		10. Following **BNPT**, Refer to PTG-4 for Valid Entries	—

DO THE ITEMS BELOW IN THE ORDER LISTED . . . . . FOR DETAILS, GO TO

	CMS CODE		
6 (Contd)		11. Following **WRNTP**, Refer to PTG-4 for Valid Entries	—
		12. Following **CMERGE**, Refer to PTG-4 for Valid Entries	—
		13. Following **PRIT**, Refer to PTG-4 for Valid Entries	—
		14. Following **MEGC**, Refer to PTG-4 for Valid Entries	—
		15. Following **SDNA**, Refer to PTG-4 for Valid Entries	—
		16. Following **OWAT**, Refer to PTG-4 for Valid Entries	—
		17. Following **CBC**, Refer to PTG-4 for Valid Entries	—
		18. Following **DDD**, Refer to PTG-4 for Valid Entries	—
		19. Following **IDDD**, Refer to PTG-4 for Valid Entries	—
		20. Following **FOSPS**, Refer to PTG-4 for Valid Entries	—
		21. Following **CCIF**, Refer to PTG-4 for Valid Entries	—
		22. Following **SDNPLAN**, Refer to PTG-4 for Valid Entries	—
		23. Following **SKSP**, Refer to PTG-4 for Valid Entries	—
		24. Following **HYBRD**, Refer to PTG-4 for Valid Entries	—
		25. Following **ITELCO**, Refer to PTG-4 for Valid Entries	—
		26. Following **S5DIG**, Refer to PTG-4 for Valid Entries	—
		27. Following **D3DBN**, Refer to PTG-4 for Valid Entries	—
		28. Following **CSCSET**, Refer to PTG-4 for Valid Entries	—
		29. Following **ANCR**, Refer to PTG-4 for Valid Entries	—
		30. Following **ACCID**, Refer to PTG-4 for Valid Entries	—
		31. Following **ACCDTA**, Refer to PTG-4 for Valid Entries	—
		32. Following **PSTNG**, Refer to PTG-4 for Valid Entries	—
		33. Following **FLDSPR**, Refer to PTG-4 for Valid Entries	—

DO THE ITEMS BELOW IN THE ORDER LISTED . . . . . FOR DETAILS, GO TO			
	CMS CODE		
6		34. Following **TRIDEX**, Refer to PTG-4 for Valid Entries	—
(Contd)		85. Following **REMARKS**, Enter *CON* Followed by Applicable CON Number	—
7		Obtain Blank Copy of RC Worksheet Form 200 and Complete Entries on RC Worksheet Form 200 to Add Trunks to New International TSG	DLP-533
8		At RCDT, Enter Trunk Type Recent Change Data Message (RCDM) From RC Worksheet Form 100 Into Current Translations (**OP:RCFORM 100!**)	DLP-536
9		Verify Current Translations Data for Establishing 2W TSG (**VER:TSG:CIN a!** Where a = TSG CIN)	DLP-537
10		On *4ESS* **SWITCH RECENT CHANGE LOG SHEET**, Place Check Mark in **RCDM STATE — ACT** and **VERIFY — MAC** Columns for RCDM Entered and Verified	—
11		If RC Worksheet Form 104 Was Completed to Add Additional TFNB to TSG, Perform the Following:	—
		1. At RCDT, Enter Trunk Type RCDM From RC Worksheet Form 104 Into Current Translations (**OP:RCFORM 104!**)	DLP-536
		2. Verify Current Translations Data to Add TFNB to TSG (**VER:TFNB:TG a!** Where a = TG CIN)	DLP-516
		3. On *4ESS* **SWITCH RECENT CHANGE LOG SHEET**, Place Check Mark in **RCDM STATE — ACT** and **VERIFY — MAC** Columns for RCDM Entered and Verified	—
		4. If There Are Additional RC Worksheet Forms 104 To Be Entered, Repeat From Step 11.1	—
12		At RCDT, Enter Trunk Type RCDM From RC Worksheet Form 200 Into Current Translations (**OP:RCFORM 200!**)	DLP-536
13		Determine Verification To Be Performed	DLP-555
14		If CCITT5 Trunks Were Added (No Echo Suppressors), Verify Current Translations Data to Add Trunks to TSG (**VER:TRK:TSI a,SPC b,LVL c,FTS d!**)	DLP-503
15		If CCITT5 Trunks Were Added (With Echo Suppressors), Verify Current Translations Data to Add Trunks to TSG (**VER:TRK:TAN a!**)	DLP-504
16		On *4ESS* **SWITCH RECENT CHANGE LOG SHEET**, Place Check Mark in **RCDM STATE — ACT** and **VERIFY — MAC** Columns for RCDM Entered and Verified	—

DO THE ITEMS BELOW IN THE ORDER LISTED . . . . . FOR DETAILS, GO TO

	CMS CODE		
17		Select Next RC Worksheet Form 200 and Repeat From Step 12 Until All RCDMs Have Been Entered and Verified	—
18		Obtain Copy of All RCDM Printouts From Recent Change Record Channel (RCREC) Printer	—
19	350	Update MAC Circuit Order Status in CMS to Completed (CPD) for CONs Assigned	DLP-543
20		If Reinitialization File Is Not Available, Establish Reinitialization File	DLP-544
21		Collect All RCDM Printouts and File in Reinitialization File in Order That They Were Entered Into System	—
22		Dispose of or File RC Worksheets per Local Procedure	—

DO THE ITEMS BELOW IN THE ORDER LISTED . . . . . FOR DETAILS, GO TO

	CMS CODE		
1	120/CON	If Not Already Activated, Activate Selected CON in CMS	DLP-519
2	250	Identify Range of Traffic Numbers (TFNs) Associated With Activated CON	DLP-520
3	402 403,404	At CMS Channel, Obtain Printouts of CMS 402, 403 and 404 Displays	DLP-521
4		If Not Already in Existence, Establish *4ESS* **SWITCH RECENT CHANGE LOG BOOK**	DLP-557
5		Complete Entries On *4ESS* **SWITCH RECENT CHANGE LOG SHEET** To Establish 1WI International TSG As Follows:	—
		1. Assign RC Order Number (ORNU) for RC Worksheet Form 101	DLP-522
		2. Under Column Heading **RCDM WORKSHEET**, Enter *101*	—
		3. Under Column Heading **DESCRIPTION OF RECENT CHANGE ORDER**, Enter *ESTABLISHES 1WI INTERNATIONAL TSG* (CIN of TSG)	—
6		Obtain Blank Copy of RC Worksheet Form 101 and Complete Entries on Form 101 To Establish 1WI International TSG As Follows:	—
		1. Following RC:TSG;NEW;OPT(IN1WAY), Enter *ACT*	—
		2. Following ORNU, Enter Assigned ORNU	—
	404	3. Following TSG, Enter TSG Circuit Identification Name (CIN) From Printout of CMS 404 Display for Activated CON	DLP-523
		4. Following TOT, Enter Type of Trunk (TOT) Code (*INTL*, *INTLO*, *ITOP* or *ITOPB*)	DLP-502
		5. Following QTFN, Enter *96*	—
		6. If Range of TFNs in Activated CON Exceeds 96, Perform the Following to Add Additional Traffic Number Block (TFNB) to Existing TSG:	—
		1. Complete Entries on *4ESS* **SWITCH RECENT CHANGE LOG SHEET** to Add Additional TFNB to TSG as Follows:	
		1. Assign RC ORNU for RC Worksheet Form 104	DLP-522
		2. Under Column Heading **RCDM WORKSHEET**, Enter *104*	—

DO THE ITEMS BELOW IN THE ORDER LISTED . . . . . FOR DETAILS, GO TO

	CMS CODE		
6 (Contd)		3. Under Column Heading **DESCRIPTION OF RECENT CHANGE ORDER**, Enter *ADDS ADDITIONAL TFNB TO 1WI INTERNATIONAL TSG* (CIN of TSG)	–
		2. Obtain Blank Copy of RC Worksheet Form 104 and Complete Entries on Form 104 To Add Additional TFNB	DLP-525
		3. If There Are Still Circuits To Be Entered, Repeat From Step 6.6 for Next Group of Circuits Up to a Quantity of 96	–
	404	7. Following **SAT**, Enter Whether Satellite Facilities Are Being Used (*Y* or *N*)	DLP-550
		8. Following **DOM**, Enter *INTL*	–
	404	9. Following **PSES**, Enter Prohibit Service Evaluation Code (*Y*, *N* or Blank)	DLP-528
		10. Following **RFA**, Enter *Y*	–
		11. Following **ISC**, Enter *CCITT5*	–
		12. Following **FENPA**, Enter Far-End Numbering Plan Area Code (*2-9* or *20-99*)	DLP-505
		13. Following **GEOSEP**, Enter *0* (Zero)	–
		14. Following **CCIS2WRE**, Leave This Field Blank	–
		15. Following **BN**, Enter Billing Number Code (3-, 4- or 10-Digit Number or Leave Blank)	–
		16. Following **BRL**, Enter Billing Record Length Code (*S*, *L* or Blank)	–
		17. Following **EAS**, Enter Equal Access Signaling Code (*N*, *A*, *E*, *D* or *E*)	–
		18. Following **CMTYP**, Enter CAMA Type (*1*, *2* or Blank)	–
		19. Following **PBXESGD**, Leave This Field Blank	–
		20. Following **PBXAW**, Leave This Field Blank	–
		21. Following **FAR4E**, Enter *N*	–
		NOTE: From Circuit Provision Bureau or Equivalent Source, Obtain Information for Steps 6.22 Through 6.25 To Be Entered on RC Worksheet Form 101	–
		22. Following **FENCLASS**, Enter Far-End Network Class Code (*ACCESA*, *ACCESI*, *INTL*, *ACCESO*, *CAMA*, *CMC*, *OWATS*, *PBX*, *POTS* or Blank)	–

DO THE ITEMS BELOW IN THE ORDER LISTED . . . . . FOR DETAILS, GO TO

	CMS CODE		
6 (Contd)		23. Following **FENID**, Enter Far-End Network ID (One to Six Alphanumeric Characters or Blank)	—
		24. Following **TFG**, Leave This Field Blank	—
		25. Following **FESC6**, Enter Far-End 6-Digit Screening Code (*Y* or *N*)	—
		NOTE: From Routing Group Supervisor or Equivalent Source, Obtain Information for Steps 6.26 Through 6.27 To Be Entered on RC Worksheet Form 101	—
		26. Following **MTSC**, Enter Multiple Treatment Screening Class (*0-63*)	—
		27. Following **GNSC**, Enter Go/No Go Screening Class (*0-3*)	—
		28. From MAC Supervisor or Equivalent Source, Obtain Incoming Traffic Separation Class Code and Enter on RC Worksheet Form 101 Following **INSEP** (*0-255*)	—
		NOTE: From Trunk Operations Center (TOC) or Equivalent Source, Obtain Information for Steps 6.29 Through 6.30 To Be Entered on RC Worksheet Form 101	—
		29. Following **CAREA**, Enter Control Area Code (*0-9*)	—
		30. Following **CPOS**, Enter Control Position Code (*0-9*)	—
		31. Following **ADIG**, Enter "A"-Digit Reconstruction Code (*0*, *2-9* or Blank)	—
		32. Following **PCF**, Leave This Field Blank	—
		33. Following **AOPC**, Leave This Field Blank	
		34. Following **DPC**, Leave This Field Blank	—
		35. Following **TSGBBC**, Leave This Field Blank	—
		36. Following **FEOFC** Enter Far-End Office Code (*000-999* or Blank)	—
		37. Following **FELATA**, Enter Far-End Local Access And Transport Area Code (*000-999* or Blank)	—
		38. Following **IWZ1**, Enter International World Zone 1 Code (*Y*, *N* or Blank)	—
		39. Following **LSST**, Enter LATA/State Screening State Code (Two Alphabetic Characters or Blank)	—
		40. Following **MEM**, Enter Trunk Hunt With Memory Code (*Y*, *N* or Blank)	—

DO THE ITEMS BELOW IN THE ORDER LISTED . . . . . FOR DETAILS, GO TO			
	CMS CODE		
6 (Contd)		41. Following **CBNPR**, Enter Calling Party Number/Billing Number Default Presentation Restriction Code (*Y*, *N* or Blank)	—
		42. Following **ITC**, Enter Incoming Trunk Subgroup Class (*0-3* or Blank)	—
		43. Following **NPARINH**, Enter Inhibit NPA Reconstruction Code (*Y*, *N* or Blank)	—
		44. Following **WATSBN**, Enter WATS Billing Number (10- Digit Number or Blank)	—
		45. Following **PSUUI**, Leave This Field Blank	—
		46. Following **SCFN**, Leave This Field Blank	—
		47. Following **OVLP**, Leave This Field Blank	—
		48. Following **APS**, Leave This Field Blank	—
		49. Following **PSATP**, Leave This Field Blank	—
		50. Following **DATA**, Leave This Field Blank	—
		51. Following **BFTIS**, Leave This Field Blank	—
		52. Following **BFTNI**, Leave This Field Blank	—
		53. Following **PBXNWW**, Enter PBX No Wait For Wink Code (*Y*, *N* or Blank)	—
		54. Following **INCID**, Leave This Field Blank	—
		55. Following **SINDEX**, Enter Access Charge Verification Sampling Rate Index Code (*0-2, 4, 8, 16, 32, 64* or Blank)	—
		56. Following **IT**, Enter Intertoll Treatment Code (*Y*, *N* or Blank)	—
		57. Following **S1**, Enter Spare Code (*0-7* or Blank)	—
		58. Following **S2 through S10**, Enter Spare Code (*Y, N* or Blank)	—
		59. If Performing Circuit Orders in an AT&T Switching Network, Complete the Following Entries On RC Worksheet:	—
		1. Following **GSDN**, Refer to PTG-4 for Valid Entries	—
		2. Following **GSDNPHSE**, Refer to PTG-4 for Valid Entries	—
		3. Following **BNPT**, Refer to PTG-4 for Valid Entries	—

DO THE ITEMS BELOW IN THE ORDER LISTED . . . . . FOR DETAILS, GO TO			
	CMS CODE		
6 (Contd)		4. Following **WBNTP**, Refer to PTG-4 for Valid Entries	—
		5. Following **CMERGE**, Refer to PTG-4 for Valid Entries	—
		6. Following **PRIT**, Refer to PTG-4 for Valid Entries	—
		7. Following **MEGC**, Refer to PTG-4 for Valid Entries	—
		8. Following **SDNA**, Refer to PTG-4 for Valid Entries	—
		9. Following **OWAT**, Refer to PTG-4 for Valid Entries	—
		10. Following **CBC**, Refer to PTG-4 for Valid Entries	—
		11. Following **DDD**, Refer to PTG-4 for Valid Entries	—
		12. Following **IDDD**, Refer to PTG-4 for Valid Entries	—
		13. Following **FOSP5**, Refer to PTG-4 for Valid Entries	—
		14. Following **SDNPLAN**, Refer to PTG-4 for Valid Entries	—
		15. Following **SKSP**, Refer to PTG-4 for Valid Entries	—
		16. Following **HYBRD**, Refer to PTG-4 for Valid Entries	—
		17. Following **ITELCO**, Refer to PTG-4 for Valid Entries	—
		18. Following **S5DIG**, Refer to PTG-4 for Valid Entries	—
		19. Following **ANCR**, Refer to PTG-4 for Valid Entries	—
		20. Following **ACCID**, Refer to PTG-4 for Valid Entries	—
		21. Following **ACCDTA**, Refer to PTG-4 for Valid Entries	—
		22. Following **PSTNG**, Refer to PTG-4 for Valid Entries	—
		23. Following **FLDSPR**, Refer to PTG-4 for Valid Entries	—
		59. Following **REMARKS**, Enter *CON* Followed By Applicable CON Number	—
7		Obtain Blank Copy of RC Worksheet Form 200 and Complete Entries on Form 200 To Add Trunks to New International TSG	DLP-533

DO THE ITEMS BELOW IN THE ORDER LISTED . . . . . FOR DETAILS, GO TO

	CMS CODE		
8		At RCDT, Enter Trunk-Type Recent Change Data Message (RCDM) From RC Worksheet Form 101 Into Current Translations (**OP:RCFORM 101!**)	DLP-536
9		Verify Current Translations Data for Establishing 1WI TSG (**VER:TSG:CIN a!** Where a = TSG CIN)	DLP-538
10		On *4ESS* **SWITCH RECENT CHANGE LOG SHEET**, Place Check Mark in **RCDM — ACT** and **VERIFY — MAC** Columns for RCDM Entered and Verified	—
11		If RC Worksheet Form 104 Was Completed To Add Additional TFNB to TSG, Perform the Following:	—
		1. At RCDT, Enter Trunk-Type RCDM From RC Worksheet Form 104 Into Current Translations (**OP:RCFORM 104!**)	DLP-536
		2. Verify Current Translations Data To Add TFNB To TSG (**VER:TFNB:TG a!** Where a = TG CIN)	DLP-516
		3. On *4ESS* **SWITCH RECENT CHANGE LOG SHEET**, Place Check Mark in **RCDM STATE — ACT** and **VERIFY — MAC** Columns for RCDM Entered and Verified	—
		4. If There Are Additional RC Worksheet Forms 104 To Be Entered, Repeat From Step 11.1	—
12		At RCDT, Enter Trunk-Type RCDM From RC Worksheet Form 200 Into Current Translations (**OP:RCFORM 200!**)	DLP-536
13		If CCITT5 Trunks Were Added (With Echo Suppressors), Using RC Worksheet Form 200, Verify Current Translations Data to Add Trunks to TSG (**VER:TRK:TAN a!**)	DLP-504
14		On *4ESS* **SWITCH RECENT CHANGE LOG SHEET**, Place Check Mark in **RCDM — ACT** and **VERIFY — MAC** Columns for RCDM Entered and Verified	—
15		Select Next RC Worksheet Form 200 and Repeat From Step 12 Until All RCDMs Have Been Entered And Verified	—
16		Obtain Copy of All RCDM Printouts From Recent Change Record Channel (RCREC) Printer	—
17	350	Update MAC Circuit Order Status in CMS to Completed (*CPD*) for CONs Assigned	DLP-543
18		If Reinitialization File Is Not Available, Establish Reinitialization File	DLP-544
19		Collect All RCDM Printouts and File in Reinitialization File in Order That They Were Entered Into System	—
20		Dispose of or File RC Worksheets per Local Procedure	—

DO THE ITEMS BELOW IN THE ORDER LISTED . . . . . FOR DETAILS, GO TO

	CMS CODE		
1	120/CON	If Not Already Activated, Activate Selected CON in CMS	DLP-519
2	250	Identify Range of Traffic Numbers (TFNs) Associated With Activated CON	DLP-520
3	402 403,404	At CMS Channel, Obtain Printouts of CMS 402, 403 and 404 Displays	DLP-521
4		If Not Already in Existence, Establish *4ESS* **SWITCH RECENT CHANGE LOG BOOK**	DLP-557
5		Complete Entries On *4ESS* **SWITCH RECENT CHANGE LOG SHEET** To Establish 1WO International TSG As Follows:	—
		1. Assign RC Order Number (ORNU) for RC Worksheet Form 102	DLP-522
		2. Under Column Heading **RCDM WORKSHEET**, Enter *102*	—
		3. Under Column Heading **DESCRIPTION OF RECENT CHANGE ORDER**, Enter *ESTABLISHES 1WO INTERNATIONAL TSG* (CIN of TSG)	—
6		Obtain Blank Copy of RC Worksheet Form 102 and Complete Entries on Form 102 to Establish 1WO International TSG As Follows:	—
		1. Following RC:TSG;NEW;OPT(OUT1WAY), Enter *ACT*	—
		2. Following ORNU, Enter Assigned ORNU	—
	404	3. Following TSG, Enter TSG Circuit Identification Name (CIN) From Printout of CMS 404 Display for Activated CON	DLP-523
		4. Following TOT, Enter Type of Trunk (TOT) Code (*INTL INTLO* or *ITOPA*)	DLP-502
		5. Following QTFN, Enter *96*	—
		6. If Range of TFNs in Activated CON Exceeds 96, Perform The Following to Add Additional Traffic Number Block (TFNB) to Existing TSG:	—
		1. Complete Entries On *4ESS* **SWITCH RECENT CHANGE LOG SHEET** to Add Additional TFNB to TSG as Follows:	—
		1. Assign RC ORNU for RC Worksheet Form 104	—
		2. Under Column Heading **RCDM WORKSHEET**, Enter *104*	—

DO THE ITEMS BELOW IN THE ORDER LISTED . . . . . FOR DETAILS, GO TO

	CMS CODE		
6 (Contd)		3. Under Column Heading **DESCRIPTION OF RECENT CHANGE ORDER**, Enter *ADDS ADDITIONAL TFNB TO 1WO INTERNATIONAL TSG* (CIN of TSG)	–
		2. Obtain Blank Copy of RC Worksheet Form 104 and Complete Entries on Form 104 To Add Additional TFNB to TSG	DLP-525
		3. If There Are Still Circuits To Be Entered, Repeat From Step 6.6 for Next Group of Circuits Up to a Quantity of 96	–
	404	7. Following **SAT**, Enter Whether Satellite Facilities Are Being Used (*Y* or *N*)	DLP-550
		8. Following **DOM**, Enter *INTL*	–
		9. Following **PSES**, Enter Prohibit Service Evaluation Code (*Y*, *N* or Blank)	DLP-528
		10. Following **OSC**, Enter *CCITT5*	–
		11. Following **FENPA**, Enter Far-End Numbering Plan Area Code (*2-9* or *20-99*)	DLP-505
		12. Following **RFMP**, Enter Ring Forward Miscellaneous Distributor Point Code (*Y*, *N* or Blank)	DLP-506
		13. Following **BN**, Enter Billing Number Code (3-, 4- or 10-Digit Number or Blank)	–
		14. Following **BRL**, Enter Billing Record Length Code (*S*, *L* or Blank)	–
		15. Following **CCIS2WRE**, Leave This Field Blank	–
		16. Following **DPSTOP**, Leave This Field Blank	–
		17. Following **XCPA**, Leave This Field Blank	–
	404	18. Identify Far-End Office Class Code	DLP-507
		19. If Identified Far-End Office Class Code Is 1 to 4, Perform The Following:	–
		1. Following **OTSTT**, Enter *ATMB*	–
		2. Following **XTSTT**, Enter *ATMA*	–
		3. Following **OTMTT**, Enter *N*	–
		4. Following **XTMTT**, Enter *N*	–
		5. Following **OTSTN**, Enter *62*	–
		6. Following **OTMTN**, Leave This Field Blank	–

DO THE ITEMS BELOW IN THE ORDER LISTED . . . . . FOR DETAILS, GO TO

	CMS CODE		
6 (Contd)		7. Following **XTSTN**, Enter *61*	—
		8. Following **XTMTN**, Leave This Field Blank	—
		20. If Identified Far-End Office Class Code Is 5, Perform The Following:	—
		1. Following **OTMTT**, Enter *ATMC*	—
		2. Following **OTMTN**, Enter *063*	—
		3. Following **OTSTT**, Enter *N*	—
		4. Following **XTSTT**, Enter *N*	—
		5. Following **XTMTT**, Enter *N*	—
		6. Following **XTMTN**, Leave This Field Blank	—
		7. Following **OTSTN**, Leave This Field Blank	—
		8. Following **XTSTN**, Leave This Field Blank	—
		21. Following **DELAY**, Enter *80*	—
		22. Following **MFSPEED**, Enter *10*	—
		NOTE: From Circuit Provision Bureau or Equivalent Source, Obtain Information for Steps 6.23 Through 6.24 To Be Entered on RC Worksheet Form 102	—
		23. Following **FENCLASS**, Enter Far-End Network Class Code (*ACCESA, ACCESI, INTL, ACCESO, CMC, OWATS, PBX, POTS* or Blank)	—
		24. Following **FENID**, Enter Far-End Network ID (One to Six Alphanumeric Characters or Blank)	—
		NOTE: From Trunk Operations Center (TOC) or Equivalent Source, Obtain Information for Steps 6.25 Through 6.27 To Be Entered on RC Worksheet Form 102	—
		25. Following **NEOTR**, Enter Near-End Operational Test Responsibility (*Y* or *N*)	—
		26. Following **CAREA**, Enter Control Area Code (*0-9*)	—
		27. Following **CPOS**, Enter Control Position Code (*0-9*)	—
		28. Following **PCF**, Leave This Field Blank	—
		29. Following **AOPC**, Leave This Field Blank	—

DO THE ITEMS BELOW IN THE ORDER LISTED . . . . . FOR DETAILS, GO TO

	CMS CODE		
6 (Contd)		30. Following **DPC**, Leave This Field Blank	—
		31. Following **TFG**, Leave This Field Blank	—
		32. Following **TSGBBC**, Leave This Field Blank	—
		33. Following **ACD**, Enter Automatic Call Distributor Code (*Y*, *N*, *T* or Blank)	—
		34. Following **FEOFC**, Enter Far-End Office Code (*000-999* or Blank)	—
		35. Following **FELATA**, Enter Far-End Local Access And Transport Area Code (*000-999* or Blank)	—
		36. Following **IWZ1**, Enter International World Zone 1 Code (*Y, N* or Blank)	—
		37. Following **MEM**, Enter Trunk Hunt With Memory Code (*Y, N* or Blank)	—
		38. Following **DNP**, Enter Dialed Number Preferred Code (*Y, N* or Blank)	—
		39. Following **PSOLI**, Leave This Field Blank	—
		40. Following **PSBN**, Enter Prohibit Sending Billing Number Code (*Y, N* or Blank)	—
		41. Following **PSCPN**, Enter Prohibit Sending Calling Party Number Code (*Y, N* or Blank)	—
		42. Following **ANISID**, Enter ANI/SID Request Code (*NONE, ANI, PANI, PSID, REQ, SID* or Blank)	—
		43. Following **WANISID**, Enter WATS Service ANI/SID Request Code (*NONE, ANI, PANI, PSID, REQ, SID* or Blank)	—
		44. Following **PSUUI**, Leave This Field Blank	—
		45. Following **SCFN**, Leave This Field Blank	—
		46. Following **APS**, Leave This Field Blank	—
		47. Following **CHNEG**, Leave This Field Blank	—
		48. Following **PSATP**, Leave This Field Blank	—
		49. Following **DOFP**, Enter Disable Outgoing Fraud Prevention Code (*Y* or *N*)	—
		50. Following **ONCID**, Leave This Field Blank	—
		51. Following **MULAW**, Leave This Field Blank	—
		52. Following **CID**, Leave This Field Blank	—

DO THE ITEMS BELOW IN THE ORDER LISTED . . . . . FOR DETAILS, GO TO

6 (Contd)	**CMS CODE**		
		53. Following **SINDEX**, Enter Access Charge Verification Sampling Rate Index Code (*0-2, 4, 8, 16, 32, 64* or Blank)	_
		54. Following **CODSC**, Enter CPE Outgoing Disconnect Code (*Y*, *N* or Blank)	_
		55. Following **S1**, Enter Spare Code (*0-7* or Blank)	_
		56. Following **S2** through **S10**, Enter Spare Code (*Y, N* or Blank)	_
		57. If Performing Circuit Orders In An AT&T Switching Network, Complete The Following Entries On RC Worksheet:	_
		1. Following **VDCAP**, Refer to PTG-4 for Valid Entries	_
		2. Following **FEAREA**, Refer to PTG-4 for Valid Entries	_
		3. Following **FESWID**, Refer to PTG-4 for Valid Entries	_
		4. Following **EXSEQ**, Refer to PTG-4 for Valid Entries	_
		5. Following **FEPTY**, Refer to PTG-4 for Valid Entries	_
		6. Following **GSDN**, Refer to PTG-4 for Valid Entries	_
		7. Following **CMERGE**, Refer to PTG-4 for Valid Entries	_
		8. Following **PRIT**, Refer to PTG-4 for Valid Entries	_
		9. Following **BNPT**, Refer to PTG-4 for Valid Entries	_
		10. Following **SBRIV**, Refer to PTG-4 for Valid Entries	_
		11. Following **FOSPS**, Refer to PTG-4 for Valid Entries	_
		12. Following **CCIF**, Refer to PTG-4 for Valid Entries	_
		13. Following **D3DBN**, Refer to PTG-4 for Valid Entries	_
		14. Following **CSCSET**, Refer to PTG-4 for Valid Entries	_
		15. Following **ANCR**, Refer to PTG-4 for Valid Entries	_
		16. Following **ACCID**, Refer to PTG-4 for Valid Entries	_
		17. Following **ACCDTA**, Refer to PTG-4 for Valid Entries	_

DO THE ITEMS BELOW IN THE ORDER LISTED . . . . . FOR DETAILS, GO TO			
	CMS CODE		
6 (Contd)		18. Following **PSTNG**, Refer to PTG-4 for Valid Entries	—
		19. Following **FLDSPR**, Refer to PTG-4 for Valid Entries	—
		20. Following **TRIDX**, Refer to PTG-4 for Valid Entries	—
		58. Following **REMARKS**, Enter ***CON*** Followed by Applicable CON Number	—
7		Obtain Blank Copy of RC Worksheet Form 200 and Complete Entries On Form 200 To Add Trunks To New International TSG	DLP-533
8		At RCDT, Enter Trunk-Type Recent Change Data Message (RCDM) From RC Worksheet Form 102 Into Current Translations (**OP:RCFORM 102!**)	DLP-536
9		Verify Current Translations Data for Establishing IWO TSG (**VER:TSG:CIN a!** Where a = TSG CIN)	DLP-539
10		On *4ESS* **SWITCH RECENT CHANGE LOG SHEET**, Place Check Mark in **RCDM — ACT** and **VERIFY — MAC** Columns for RCDM Entered and Verified	—
11		If RC Worksheet Form 104 Was Completed To Add Additional TFNB to TSG, Perform the Following:	—
		1. At RCDT, Enter Trunk-Type RCDM From RC Worksheet Form 104 Into Current Translations (**OP:RCFORM 104!**)	DLP-536
		2. Verify Current Translations Data To Add TFNB to TSG (**VER:TFNB:TG a!** Where a = TG CIN)	DLP-516
		3. On *4ESS* **SWITCH RECENT CHANGE LOG SHEET**, Place Check Mark in **RCDM — ACT** and **VERIFY — MAC** Columns for RCDM Entered and Verified	—
		4. If There Are Additional RC Worksheets Forms 104 To Be Entered, Repeat From Step 11.1	—
12		At RCDT, Enter Trunk-Type RCDM From RC Worksheet Form 200 Into Current Translations (**OP:RCFORM 200!**)	DLP-536
13		Determine Verification To Be Performed	DLP-555
14		If CCITT5 Trunks Were Added (No Echo Suppressors), Verify Current Translations Data to Add Trunks to TSG (**VER:TRK:TSI a,SPC b,LVL c,FTS d!**)	DLP-503
15		If CCITT5 Trunks Were Added (With Echo Suppressors), Verify Current Translations Data to Add Trunks to TSG (**VER:TRK:TAN a!**)	DLP-504

DO THE ITEMS BELOW IN THE ORDER LISTED . . . . . FOR DETAILS, GO TO

	CMS CODE		
16		On *4ESS* **SWITCH RECENT CHANGE LOG SHEET**, Place Check Mark in **RCDM — ACT** and **VERIFY — MAC** Columns for RCDM Entered and Verified	—
17		Select Next RC Worksheet Form 200 and Repeat From Step 12 Until All RCDMs Have Been Entered And Verified	—
18		Obtain Copy of All RCDM Printouts From Recent Change Record Channel (RCREC) Printer	—
19	350	Update MAC Circuit Order Status in CMS to Completed (*CPD*) for CONs Assigned	DLP-543
20		If Reinitialization File Is Not Available, Establish Reinitialization File	DLP-544
21		Collect All RCDM Printouts and File in Reinitialization File in Order That They Were Entered Into System	—
22		Dispose of or File RC Worksheets per Local Procedure	—

DO THE ITEMS BELOW IN THE ORDER LISTED . . . . . FOR DETAILS, GO TO

	CMS CODE		
1	120/CON	If Not Already Activated, Activate Selected CON in CMS	DLP-519
2	250	Identify Range of Traffic Numbers (TFNs) Associated With Activated CON	DLP-520
3		Verify Trunk Subgroup (TSG) Circuit Identification Name (CIN) for Activated CON (**VER:TSG:CIN a!** Where a = TSG CIN)	DLP-509
4		If Not Already in Existence, Establish *4ESS* **SWITCH RECENT CHANGE LOG BOOK**	DLP-557
5		If There Is a TFN Ending With 01 in Identified Range of TFNs Associated With Activated CON, Perform the Following to Add Additional Traffic Number Block (TFNB) to Existing TSG:	—
		1. Complete Entries on *4ESS* **SWITCH RECENT CHANGE LOG SHEET** to Add Additional TFNB to TSG as Follows:	—
		1. Assign RC Order Number (ORNU) for RC Worksheet Form 104	DLP-522
		2. Under Column Heading **RCDM WORKSHEET**, Enter *104*	—
		3. Under Column Heading **DESCRIPTION OF RECENT CHANGE ORDER**, Enter *ADDS ADDITIONAL TFNB TO* (*1WI*, *1WO* or *2W*) *TSG* (CIN of TSG)	—
		2. Obtain Copy of RC Worksheet Form 104 and Complete Entries on Form 104 To Add Additional TFNB to TSG	DLP-525
		3. If There Are Still Circuits To Be Entered, Repeat From Item 5.1 for Next Group of Circuits Up to a Quantity of 96	—
6		Obtain Blank Copy of RC Worksheet Form 200 and Complete Entries on Form 200 To Add CCITT5 Trunks to New International TSG	DLP-533
7		If RC Worksheet Form 104 Was Completed To Add Additional TFNB to TSG, Perform The Following:	—
		1. At RCDT, Enter Trunk-Type Recent Change Data Message (RCDM) From RC Worksheet Form 104 Into Current Translations (**OP:RCFORM 104!**)	DLP-536
		2. Verify Current Translations Data To Add TFNB to TSG (**VER:TFNB:TG a!** Where a = TG CIN)	DLP-516
		3. On *4ESS* **SWITCH RECENT CHANGE LOG SHEET**, Place Check Mark in **RCDM STATE — ACT** and **VERIFY — MAC** Columns for RCDM Entered and Verified	—

ADD NON-CCS TRUNKS TO EXISTING INTERNATIONAL TSG

DO THE ITEMS BELOW IN THE ORDER LISTED . . . . . FOR DETAILS, GO TO

	CMS CODE		
7 (Contd)		4. If There Are Additional RC Worksheet Forms 104 To Be Entered, Repeat From Item 7.1	_
8		At RCDT, Enter Trunk-Type RCDM From RC Worksheet Form 200 Into Current Translations (**OP:RCFORM 200!**)	DLP-536
9		Determine Verification To Be Performed	DLP-555
10		If CCITT5 Trunks Were Added (No Echo Suppressors), Verify Current Translations Data To Add Trunks to TSG (**VER:TRK:TSI a,SPC b,LVL c,FTS d!**)	DLP-503
11		If CCITT5 Trunks Were Added (With Echo Suppressors), Verify Current Translations Data to Add Trunks to TSG (**VER:TRK:TAN a!**)	DLP-504
12		On *4ESS* **SWITCH RECENT CHANGE LOG SHEET**, Place Check Mark in **RCDM STATE — ACT** and **VERIFY — MAC** Columns for RCDM Entered and Verified	_
13		Select Next RC Worksheet Form 200 and Repeat From Item 8 Until All RCDMs Have Been Entered and Verified	_
14		Obtain Copy of All RCDM Printouts From Recent Change Record Channel (RCREC) Printer	_
15	350	Update MAC Circuit Order Status in CMS to Completed (*CPD*) for CONs Assigned	DLP-543
16		If Reinitialization File Is Not Available, Establish Reinitialization File	DLP-544
17		Collect All RCDM Printouts and File in Reinitialization File in Order That They Were Entered Into System	_
18		Dispose of or File RC Worksheets per Local Procedure	_

DO THE ITEMS BELOW IN THE ORDER LISTED . . . . . FOR DETAILS, GO TO

	CMS CODE		
1		At Recent Change Record Channel (RCREC), Obtain Printout of Order Numbers (ORNUs) Entered in Rollback Area (**OP:RCRORNU,ALL!**)	DLP-547
2		Label Printout *ROLLBACK AREA HISTORY*	—
3		Obtain Printout of ORNUs in Buffer State (**OP:RCBORNU!**)	DLP-548
4		Label Printout *BUFFER HISTORY*	—
5		Instruct MOC To Write Backup Office Data Assembler (ODA) Tape	—
6		At RCREC Magnetic Tape Terminal (MTT):	—
		1. Remove Old Tape Cartridge	DLP-549
		2. Mount New Tape Cartridge	DLP-500
7		Using **ROLLBACK AREA HISTORY** Printout (Item 1), Audit Reinitialization File	DLP-501
8		Verify With MOC That Recent Change (RC) Activity Is Enabled	—
9		Retain Old BUF State Tape Cartridge	—

DO THE ITEMS BELOW IN THE ORDER LISTED . . . . . FOR DETAILS, GO TO

	CMS CODE		
1	120/CON	If Not Already Activated, Activate Selected CON in CMS	DLP-519
2	250	Identify Range of Traffic Numbers (TFNs) Associated With Activated CON	DLP-520
3	402, 403,404	At CMS Channel, Obtain Printouts of CMS 402, 403 and 404 Displays	DLP-521
4		Verify MF TSG Characteristics (**VER:TSG:CIN a!** Where a = TSG CIN)	DLP-559
5		Verify MF TSG Trunk Assignments (**VER:TRK:TAN a!** Where a = Single Tan Assignment or Range of TAN Assignments)	DLP-560
6		Verify Common Network Interface (CNI) Ring Routing Data For TSG to be Converted From MF to CCS (**OP:C7NET;ROUTING**)	—
7		Notify Far-End and Coordinate Activity to Convert MF TSG to CCS TSG	—
8		Set Maintenance State of all Trunks in TSG to Circuit Administration Disabled (CAD.DSA) (**SET:TRKSTAT CAD.DSA,CIN a:TSG!** Where a = TSG CIN)	DLP-561
9		If Not Already in Existence, Establish *4ESS* **SWITCH RECENT CHANGE LOG BOOK**	DLP-557
10		Complete Entries On *4ESS* **SWITCH RECENT CHANGE LOG SHEET** to Delete Trunks from MF TSG as Follows:	—
		1. Assign RC Order Number (ORNU) for RC Worksheet Form 202	DLP-522
		2. Under Column Heading **RCDM WORKSHEET**, Enter *202*	—
		3. Under Column Heading **DESCRIPTION OF RECENT CHANGE ORDER**, Enter *DELETES MF TRUNKS FOR MF TO CCS TSG CONVERSION* (CIN of TSG)	—
11		Obtain Blank Copy of RC Worksheet Form 202 and Complete Entries on Form 202 to Delete Trunks from MF TSG as Follows:	—
		1. Following **RC:TRK;OUT;**, Enter *ACT*	—
		2. Following **ORNU**, Enter Assigned ORNU	—
	404	3. Following **TSG**, Enter TSG Circuit Identification Name (CIN) From Display of TSG Characteristics for Activated CON	—

DO THE ITEMS BELOW IN THE ORDER LISTED . . . . . FOR DETAILS, GO TO

	CMS CODE		
11 (Contd)		4. Determine Quantity of Trunks (QTRK) to be Deleted and First Traffic Number (FTFN) in Group of Trunks	–
		5. Under **QTRK**, Enter Quantity of Trunks to be Deleted	–
		6. Under **FTFN**, Enter First TFN in Group of Trunks to be Deleted	–
		7. Following **REMARKS**, Enter *CON* Followed by Applicable CON Number	–
		8. If There are Still Trunks to be Deleted, Repeat From Step 10	–
12		Complete Entries On *4ESS* **SWITCH RECENT CHANGE LOG SHEET** to Change MF TSG Characteristics to CCS Characteristic as Follows:	–
		1. Assign RC Order Number (ORNU) for RC Worksheet Form 107	DLP-522
		2. Under Column Heading **RCDM WORKSHEET**, Enter *107*	–
		3. Under Column Heading **DESCRIPTION OF RECENT CHANGE ORDER**, Enter *CONVERT MF TSG TO CCS TSG* (CIN of TSG)	–
13		Obtain Blank Copy of RC Worksheet Form 107 and Complete Entries on Form 107 to Change 2W MF TSG Characteristics to CCS Characteristics as Follows:	–
		1. Following **RC:TSG;CHG;OPT(TWOWAY)**, Enter *ACT*	–
		2. Following **ORNU**, Enter Assigned ORNU	–
	404	3. Following **TSG**, Enter TSG Circuit Identification Name (CIN) From Printout of CMS 404 Display for Activated CON	DLP-523
	404	4. Following **TOT**, Enter Type of Trunk Code (*ETC, LCC, OCC ITAND, ITOLL, SECIT, TAND* or *TOLLC*)	DLP-524
		5. Following **C1WTO2W**, Enter Convert 1W TSG to 2W TSG Code (*Y, N* or Blank)	–
		6. Following **ACD**, Enter Automatic Call Distributor Code (*Y, N, T* or Blank)	–
	404	7. Following **SAT**, Enter Whether Satellite Facilities are Being Used (*Y* or *N*)	DLP-527
	404	8. Following **DOM**, Enter Domain Code (*POTS, VRFY, SDNA, DEV, DED, 20-83, I56D, I64C, N64C, N64R, IVT* or *APN*)	DLP-526

DO THE ITEMS BELOW IN THE ORDER LISTED . . . . . FOR DETAILS, GO TO

	CMS CODE		
13 (Contd)	404	9. Following **PSES**, Enter Prohibit Service Evaluation Code (*Y, N* or Blank)	DLP-528
	404	10. Following **REV**, Enter Reverse Hunt Code (*Y* or *N*)	DLP-529
		11. Following **RFMP**, Enter Ring Forward Miscellaneous Distributor Point Code (*Y, N* or Blank)	DLP-506
		12. Following **GEOSEP**, Enter Geographical Traffic Separation Class Code (*0-31*)	DLP-554
		13. Following **CCIS2WRE**, Enter Common Channel Interoffice Signaling 2 Wire Code (*Y* or *N*)	–
		14. Following **XCPA**, Enter Transceiver Pad Adjustment Code (*0-3*)	–
		15. Following **RFA**, Enter Ring Forward Allowed Code (*Y* or *N*)	DLP-530
		16. Following **FENPA**, Enter Far-End Numbering Plan Area Code (*200-999*)	–
		Note: From Far-End Equipment Engineering, Cutover Coordinator, Circuit Provision Bureau, or Equivalent Source, Obtain Information for Steps 13.17 Through 13.31 To Be Entered on RC Worksheet Form 107	–
		17. Following **FENCLASS**, Enter Far-End Network Class Code (*ACCESA, ACCESO, PBX, POTS, ACCESI, CMC, OWATS* or Blank)	–
		18. Following **FENID**, Enter Far-End Network ID Code (Up to 6 Alphanumeric Characters or Blank)	–
		19. If FENCLASS Is ACCESA, Following **TFG** Enter Type of Feature Group Code (*B, C* or *D*)	–
		20. Following **ISC**, Enter *ISUP*	–
		21. Following **OSC**, Enter *ISUP*	–
		22. Following **DPSTOP**, Enter Dial Pulse Stop Code (*Y, N* or Blank)	–
		23. Follwing **DELAY**, Enter Delay Code (*20, 80, 220, 70, 140, 210, 280* or Blank)	–
		24. Following **MFSPEED**, Enter Multifrequency Speed Code (*7, 10* or Blank)	–
		25. Following **DNHR**, Enter *N*	–
		26. Following **FESC6**, Enter Far-End 6-Digit Screening Code (*Y* or *N*)	–

DO THE ITEMS BELOW IN THE ORDER LISTED . . . . . FOR DETAILS, GO TO			
	CMS CODE		
13 (Contd)		27. If TOT Is PBX, Perform the Following on RC Worksheet Form 107:	—
		1. If DOM Entry Is SDNA, Following **PBXESGD** Enter *Y*; Otherwise, Leave Blank	—
		2. Following **PBXAW**, Enter PBX Answer Withheld Code (*Y, N* or Blank)	—
		28. Following **BN**, Enter Billing Number Code (3-, 4- or 10-Digit Number or Blank)	—
		29. Following **BRL**, Enter Billing Record Length Code (*S, L* or Blank)	—
		30. Following **EAS**, Enter Equal Access Signaling Code (*N, A, E, D* or *R*)	—
		31. Following **FAR4E**, Enter Whether Far End Is *4ESS* Switch (*Y* or *N*)	—
		Note: From Routing Group Supervisor or Equivalent Source, Obtain Information for Steps 13.32 Through 13.33 To Be Entered on RC Worksheet Form 107	—
		32. Following **MTSC**, Enter Multiple Treatment Screening Class Code (*0-63*)	—
		33. Following **GNSC**, Enter Go/No Go Screening Class Code (*0-3*)	—
		Note: From MAC Supervisor or Equivalent Source, Obtain Information for Steps 13.34 Through 13.36 To Be Entered on RC Worksheet Form 107	—
		34. Following **ADIG**, Enter "A"-Digit Reconstruction Code (*0, 2-9* or Blank)	—
		35. Following **GLARE**, Enter Glare Control Code (*A, N* or Blank)	—
		36. Following **INSEP**, Enter Incoming Traffic Separation Class Code (*0-255*)	—
		Note: From Trunk Operation Center (TOC) or Equivalent Source, Obtain Information for Steps 13.37 Through 13.47 and Enter on RC Worksheet Form 107	—
		37. Following **NEOTR**, Enter Near-End Operational Test Responsibility Code (*Y* or *N*)	—
		38. Following **CAREA**, Enter Control Area Code (*0-9*)	—
		39. Following **CPOS**, Enter Control Position Code (*0-9*)	—
		40. Following **OTSTT**, Enter Operational Through Switch Test Type (*CTX2, CTX3, SXS, SYNC, T103* or *N*)	—
		41. If OTSTT Entry Is **N**, Following **OTSTN** Leave This Field Blank; Otherwise, Enter Operational Through Switch Test Number (*000-9999999*)	—

DO THE ITEMS BELOW IN THE ORDER LISTED . . . . . FOR DETAILS, GO TO

	CMS CODE		
13 (Contd)		42. Following **XTSTT**, Enter Transmission Through Switch Test Type (*T100, T102, T105* or *N*)	—
		43. If XTSTT Entry Is **N**, Following **XTSTN** Leave This Field Blank; Otherwise, Enter Transmission Through Switch Test Number (*000-9999999*)	—
		44. Following **OTMTT**, Enter Operational Terminating Test Type (*CTX2, CTX3, SXS, SYNC, T103* or *N*)	—
		45. If OTMTT Entry Is **N**, Following **OTMTN** Leave This Field Blank; Otherwise, Enter Operational Terminating Test Number (*000-9999999*)	—
		46. Following **XTMTT**, Enter Transmission Terminating Test Type (*T100, T102, T105* or *N*)	—
		47. If XTMTT Entry Is **N**, Following **XTMTN** Leave This Field Blank; Otherwise, Enter Transmission Terminating Test Number (*000-9999999*)	—
		48. Following **PCF**, Leave This Field Blank	—
		49. Following **AOPC**, Leave This Field Blank	—
		50. Following **DPC**, Leave This Field Blank	—
		51. Following **TSGBBC**, Leave This Field Blank	—
		52. Following **FEOFC**, Enter Far-End Office Code (*000-999* or Blank)	—
		53. Following **FELATA**, Enter Far-End Local Access and Transport Area Code (*000-999* or Blank)	—
		54. Following **IWZ1**, Enter International World Zone 1 Code (*Y, N* or Blank)	—
		55. Following **LSST**, Enter LATA/STATE Screening State Code (Two Alphabetic Characters or Blank)	—
		56. Following **MEM**, Enter Trunk Hunt With Memory Code (*Y, N* or Blank)	—
		57. Following **CBNPR**, Enter Calling Party Number/Billing Number Default Presentation Restriction Code (*Y, N*	—
		58. Following **DNP**, Enter Dialed Number Preferred Code (*Y, N* or Blank)	—
		59. Following **PSOLI**, Enter Prohibit Sending Originating Line Identity Code (*Y, N* or Blank)	—
		60. Following **ITC**, Enter Incoming Trunk Subgroup Class (*0-3* or Blank)	—

DO THE ITEMS BELOW IN THE ORDER LISTED . . . . . FOR DETAILS, GO TO

	CMS CODE		
13 (Contd)		61. Following **NPARINH**, Enter Inhibit NPA Reconstruction Code (*Y, N* or Blank)	—
		62. Following **WATSBN**, Enter WATS Billing Number (10-Digit Number or Blank)	—
		63. Following **PSBN**, Enter Prohibit Sending Billing Number Code (*Y, N* or Blank)	—
		64. Following **PSCPN**, Enter Prohibit Sending Calling Party Number Code (*Y, N* or Blank)	—
		65. Following **ANISID**, Enter ANI/SID Request Code (*NONE, ANI, PANI, REQ, SID* or Blank)	—
		66. Following **WANISID**, Enter WATS Service ANI/SID Request Code (*NONE, ANI, PANI, PSID, REQ, SID* or Blank)	—
		67. Following **PSUUI**, Enter Prohibit Sending User-to-User Information Code (*Y, N* or Blank)	—
		68. Following **SCFN**, Enter Send Confusion Message (*Y, N* or Blank)	—
		69. Following **OVLP**, Enter Overlap Signaling (*Y, N* or Blank)	—
		70. Following **APS**, Enter ACCUNET® Packet Service Code (*Y, N* or Blank)	—
		71. Following **CHNEG**, Enter Channel Negotiation Code (*Y, N* or Blank)	—
		72. Following **PSATP**, Enter Prohibit Sending Access Transport Parameters Code (*Y, N* or Blank)	—
		73. Following **DOFP**, Enter Disable Outgoing Fraud Prevention Code (*Y* or *N*)	—
		74. Following **DATA**, Enter Data Service Code (*Y, N* or Blank)	—
		75. Following **BFTIS**, Enter Backward Failure Treatment All ISUP Code (*ANN, REL* or Blank)	—
		76. Following **BFTNI**, Enter Backward Failure Treatment Not All ISUP Code (*ANN, REL* or Blank)	—
		77. Following **INCID**, Enter Number of Carrier ID digits to be received (*3, 4, B* or Blank)	—
		78. Following **ONCID**, Enter Number of Carrier ID digits to be sent (*3, 4* or Blank)	—
		79. Following **MULAW**, Enter A-law/Mu-law Encoding (*Y, N* or Blank)	—
		80. Following **cid**, Enter Carrier ID (*0000* to *9999* or Blank)	—
		81. Following **SINDEX**, Enter Access Charge Verification Sampling Rate Index Code (*0-2, 4, 8, 16, 32, 64* or Blank)	—

DO THE ITEMS BELOW IN THE ORDER LISTED . . . . . FOR DETAILS, GO TO

	CMS CODE		
13 (Contd)		82. Following **CODSC**, Enter CPE Outgoing Disconnect Code (*Y* or *N*)	—
		83. Following **IT**, Enter Intertoll Treatment Code (*Y, N* or Blank)	—
		84. Following **PBXNWW**, Enter PBX No Wait For Wink Code (*Y, N* or Blank)	—
		85. Following **S1**, Enter Spare Code (*0-7* or Blank)	—
		86. Following **S2** through **S10**, Enter Spare Code (*Y, N* or Blank)	—
		87. If Performing Circuit Orders in an AT&T Switching Network, Complete the Following Entries On RC Worksheet Form 107:	—
		1. Following **VDCAP**, Refer to PTG-4 for Valid Entries	—
		2. Following **DATAF**, Refer to PTG-4 for Valid Entries	—
		3. Following **FEAREA**, Refer to PTG-4 for Valid Entries	—
		4. Following **FESWID**, Refer to PTG-4 for Valid Entries	—
		5. Following **EXSEQ**, Refer to PTG-4 for Valid Entries	—
		6. Following **FEPTY**, Refer to PTG-4 for Valid Entries	—
		7. Following **GSDN**, Refer to PTG-4 for Valid Entries	—
		8. Following **GSDNPHSE**, Refer to PTG-4 for Valid Entries	—
		9. Following **SBRIV**, Refer to PTG-4 for Valid Entries	—
		10. Following **BNPT**, Refer to PTG-4 for Valid Entries	—
		11. Following **WBNTP**, Refer to PTG-4 for Valid Entries	—
		12. Following **CMERGE**, Refer to PTG-4 for Valid Entries	—
		13. Following **PRIT**, Refer to PTG-4 for Valid Entries	—
		14. Following **MEGC**, Refer to PTG-4 for Valid Entries	—
		15. Following **SDNA**, Refer to PTG-4 for Valid Entries	—
		16. Following **OWAT**, Refer to PTG-4 for Valid Entries	—

DO THE ITEMS BELOW IN THE ORDER LISTED . . . . . FOR DETAILS, GO TO			
	CMS CODE		
13 (Contd)		17. Following **CBC**, Refer to PTG-4 for Valid Entries	—
		18. Following **DDD**, Refer to PTG-4 for Valid Entries	—
		19. Following **IDDD**, Refer to PTG-4 for Valid Entries	—
		20. Following **FOSPS**, Refer to PTG-4 for Valid Entries	—
		21. Following **CCIF**, Refer to PTG-4 for Valid Entries	—
		22. Following **HYBRD**, Refer to PTG-4 for Valid Entries	—
		23. Following **ITELCO**, Refer to PTG-4 for Valid Entries	—
		24. Following **S5DIG**, Refer to PTG-4 for Valid Entries	—
		25. Following **D3DBN**, Refer to PTG-4 for Valid Entries	—
		26. Following **CSCSET**, Refer to PTG-4 for Valid Entries	—
		27. Following **ANCR**, Refer to PTG-4 for Valid Entries	—
		28. Following **ACCID**, Refer to PTG-4 for Valid Entries	—
		29. Following **ACCDTA**, Refer to PTG-4 for Valid Entries	—
		30. Following **PSTNG**, Refer to PTG-4 for Valid Entries	—
		31. Following **FLDSPR**, Refer to PTG-4 for Valid Entries	—
		32. Following **SDNPLAN**, Refer to PTG-4 for Valid Entries	—
		33. Following **SKSP**, Refer to PTG-4 for Valid Entries	—
		34. Following **TRIDEX**, Refer to PTG-4 for Valid Entries	—
		88. Following **REMARKS**, Enter *CON* Followed by Applicable CON Number	—
14		Complete Entries On *4ESS* **SWITCH RECENT CHANGE LOG SHEET** to Add CCS Trunks to CCS TSG as Follows:	—
		1. Assign RC Order Number (ORNU) For RC Worksheet Form 203	DLP-522

DO THE ITEMS BELOW IN THE ORDER LISTED . . . . . FOR DETAILS, GO TO

	CMS CODE		
14 (Contd)		2. Under Column Heading **RCDM WORKSHEET**, Enter *203*	–
		3. Under Column Heading **DESCRIPTION OF RECENT CHANGE ORDER**; Enter *ADDS 2W CCS TRUNKS TO CCS TSG* (CIN of TSG)	–
15		Obtain Blank Copy of RC Worksheet Form 203 and Complete Entries on Form 203 to Add Trunk to CCS TSG as Follows:	–
		1. Following **RC:TRK;NEW;OPT** (**MANUAL, CCS**), Enter *ACT*	–
		2. Following **ORNU**, Enter Assigned Order Number (ORNU)	–
		3. Following **TSG**, Enter TSG Circuit Identification Name (CIN)	–
		4. Following **ES**, Enter Echo Suppressor Code (*EC, FULL, HALF, N* or *PCC*)	–
		5. Following **PTERM**, Enter Primary Terminal Code (*0-255*)	–
		6. Following **STERM**, Enter Secondary Terminal Code (*0-255*)	–
		7. Under **QTRK**, Enter Quantity of Trunks (*1-120*)	–
		8. Under **FTFN**, Enter First Traffic Number (*0-9999*)	–
		9. Under **TAN**, Enter Trunk Appearance Number (TSI = *0-63*, SPC = *0* or *1*, LVL = *0-6*, FTS = *1-120*)	–
		10. Under **LABEL**, Enter Label Assignment (FBAND = *0-510*, FMEMN = *0-15* or Blank)	–
		11. Under **FCIC**, Enter First Circuit Identification Code (*0-4095* or Blank)	–
		12. Under **VCR**, Enter Voice Path Assurance Cancellation Rate (*0, 50, 87* or *100*)	–
		13. Under **SCGA**, Enter Software Carrier Group Alarm Code (*Y, N* or Blank)	–
		14. If Performing Circuit Orders in an AT&T Switching Network, Refer to PTG-4 for BBC Valid Entries and Enter Under **BBC**	–
		15. Following **REMARKS**, Enter *CON* Followed by Applicable CON Number	–
		16. If There Are Still Trunks To Be Added And Additional Trunks Can Be Added Using Existing Form 203, Repeat From Step 15.7; Otherwise, Repeat From Step 14	–

DO THE ITEMS BELOW IN THE ORDER LISTED . . . . . FOR DETAILS, GO TO			
	CMS CODE		
16		At RCDT, Enter Trunk Type Recent Change Data Message (RCDM) From RC Worksheet Form 202 Into Current Translations (**OP:RCFORM 202!**)	DLP-536
17		Verify Current Translations Data To Delete Trunks From MF TSG (**VER;TSG:CIN a!** Where a = TSG CIN)	DLP-512
18		On *4ESS* **SWITCH RECENT CHANGE LOG SHEET**, Place Check Mark In **RCDM STATE — ACT** and **VERIFY — MAC** Columns For RCDM Entered and Verified	—
19		Select Next RC Worksheet Form 202 And Repeat From Step 16 Until All RCDMs Have Been Entered and Verified	
20		At RCDT, Enter Trunk Type Recent Change Data Message (RCDM) From RC Worksheet Form 107 Into Current Translations (**OP:RCFORM 107!**)	DLP-536
21		Verify Current Translations Data To Change 2W MF TSG Characteristics To CCS Characteristics (**VER:TSG:CIN a!** Where a = TSG CIN)	DLP-559
22		On *4ESS* **SWITCH RECENT CHANGE LOG SHEET**, Place Check Mark In **RCDM STATE — ACT** and **VERIFY — MAC** Columns For RCDM Entered and Verified	—
23		At RCDT, Enter Trunk Type Recent Change Data Message (RCDM) From RC Worksheet Form 203 Into Current Translations (**OP:RCFORM 203!**)	DLP-536
24		Verify Current Translations Data To Add Trunks To CCS TSG (**VER:TRK:TAN a-b!** Where a-b = Range of TAN Assignments)	DLP-540
25		On *4ESS* **SWITCH RECENT CHANGE LOG SHEET**, Place Check Mark In **RCDM STATE — ACT** and **VERIFY — MAC** Columns For RCDM Entered And Verified	—
26		Select Next RC Worksheet Form 203 And Repeat From Step 23 Until All RCDMs Have Been Entered and Verified	—
27		Obtain Copy of All RCDM Printouts From Recent Change Record Channel (RCREC) Printer	—
28		Update MAC Circuit Order Status in CMS to Completed (*CPD*) for CONs Assigned	DLP-543
29		If Reinitializtion File Is Not Available, Establish Reinitialization File	DLP-544
30		Collect All RCDM Printouts and File in Reinitialization File in Order That They Were Entered Into System	—

DO THE ITEMS BELOW IN THE ORDER LISTED . . . . . FOR DETAILS, GO TO

	CMS CODE		
31		Dispose of or File RC Worksheets per Local Procedure	—

DO THE ITEMS BELOW IN THE ORDER LISTED . . . . . FOR DETAILS, GO TO			
	CMS CODE		
1	120/CON	If Not Already Activated, Activate Selected CON in CMS	DLP-519
2	250	Identify Range of Traffic Numbers (TFNs) Associated With Activated CON	DLP-520
3	402, 403, 404	At CMS Channel, Obtain Printouts of CMS 402, 403 and 404 Displays	DLP-521
4		Verify MF TSG Characteristics (**VER:TSG:CIN a!** Where a = TSG CIN)	DLP-559
5		Verify MF TSG Trunk Assignments (**VER:TRK:TAN a!** Where a = Single TAN Assignment or Range of TAN Assignments)	DLP-560
6		Verify Common Network Interface (CNI) Ring Routing Data For TSG To Be Converted From MF to CCS (**OP:C7NET:ROUTING!**)	–
7		Notify Far-End And Coordinate Activity To Convert MF TSG To CCS TSG	–
8		If Not Already in Existence, Establish *4ESS* **SWITCH RECENT CHANGE LOG BOOK**	DLP-557
9		Complete Entries on *4ESS* **SWITCH RECENT CHANGE LOG SHEET** To Establish 2W CCS TSG As Follows:	–
		1. Assign RC Order Number (ORNU) for RC Worksheet Form 100	DLP-522
		2. Under Column Heading **RCDM WORKSHEET** , Enter *100*	–
		3. Under Column Heading **DESCRIPTION OF RECENT CHANGE ORDER**, Enter *ESTABLISHES 2W CCS TSG* (CIN of TSG)	–
10		Obtain Blank Copy of RC Worksheet Form 100 and Complete Entries on Form 100 to Establish 2W TSG As Follows:	–
		1. Following **RC:TSG;NEW;OPT(TWOWAY)**, Enter *ACT*	–
		2. Following **ORNU**, Enter Assigned ORNU	–
	404	3. Following **TSG**, Enter TSG Circuit Identification Name (CIN) From Printout of CMS 404 Display for Activated CON	DLP-523
	404	4. Following **TOT**, Enter Type of Trunk Code (*ETC, LCC, OCC, ITAND, ITOLL, SECIT, TAND, TOLLC, ITOPA, NSDSD, PBX* or *STC*)	DLP-524
		5. Following **QTFN**, Enter *96*	–

DO THE ITEMS BELOW IN THE ORDER LISTED . . . . . FOR DETAILS, GO TO			
	CMS CODE		
10 (Contd)		6. If Range of TFNs in Activated CON Exceeds 96, Perform The Following To Add Additional Traffic Number Block (TFNB) To TSG:	—
		1. Complete Entries on *4ESS* **SWITCH RECENT CHANGE LOG SHEET** To Add Additional TFNB to TSG As Follows:	—
		1. Assign RC ORNU for RC Worksheet Form 104	DLP-522
		2. Under Column Heading **RCDM WORKSHEET**, Enter *104*	—
		3. Under Column Heading **DESCRIPTION OF RECENT CHANGE ORDER**, Enter *ADDS ADDITIONAL TFNB TO 2W TSG* (CIN of TSG)	—
		2. Obtain Blank Copy of RC Worksheet Form 104 and Complete Entries on Form 104 to Add Additional TFNB To TSG	DLP-525
		3. If There Are Still Circuits To Be Entered, Repeat From Step 10.6 For Next Group of Circuits Up To A Quantity of 96	—
	404	7. Following **SAT**, Enter Whether Satellite Facilities Are Being Used (*Y* or *N*)	DLP-527
	404	8. Following **DOM**, Enter Domain Code (*POTS, VRFY, SDNA, DEV, DED, 20-83, I56D, I64C, N64C, N64R, IVT* or *APN*)	DLP-526
		9. Following **ACD**, Enter Automatic Call Distributor Code (*Y, N, T* or Blank)	—
	404	10. Following **PSES**, Enter Prohibit Service Evaluation Code (*Y, N* or Blank)	DLP-528
	404	11. Following **REV**, Enter Reverse Hunt Code (*Y* or *N*)	DLP-529
		12. Following **RFMP**, Enter Ring Forward Miscellaneous Distributor Point Code (*Y, N* or Blank)	DLP-506
		13. Following **GEOSEP**, Enter Geographical Traffic Separation Class Code (*0-31*)	DLP-554
		14. Following **CCIS2WRE**, Enter Common Channel Interoffice Signaling 2 Wire Code (*Y* or *N*)	—
		15. Following **XCPA**, Enter Transceiver Pad Adjustment Code (*0-3*)	—
		16. Following **RFA**, Enter Ring Forward Allowed Code (*Y* or *N*)	DLP-530
		17. Following **FENPA**, Enter Far-End Numbering Plan Area Code (*200-999*)	—

DO THE ITEMS BELOW IN THE ORDER LISTED . . . . . FOR DETAILS, GO TO			
	CMS CODE		
10 (Contd)		**NOTE:** From Far-End Equipment Engineering, Cutover Coordinator, Circuit Provision Bureau, or Equivalent Source, Obtain Information for Steps 10.19 Through 10.33 To Be Entered on RC Worksheet Form 100	—
		18. Following **FENCLASS**, Enter Far-End Network Class Code (*ACCESA, ACCESO, PBX, POTS, ACCESI, CMC, OWATS* or Blank)	—
		19. Following **FENID**, Enter Far-End Network ID Code (Up to 6 Alphanumeric Characters or Blank)	—
		20. If FENCLASS Is ACCESA, Following **TFG** Enter Type of Feature Group Code (*B, C* or *D)*	—
		21. Following **ISC**, Enter *ISUP*	—
		22. Following **OSC**, Enter *ISUP*	—
		23. Following **DPSTOP**, Leave This Field Blank	—
		24. Following **DELAY**, Leave This Field Blank	—
		25. Following **MFSPEED**, Leave This Field Blank	—
		26. Following **DNHR**, Enter *N*	—
		27. Following **FESC6**, Enter Far-End 6-Digit Screening Code (*Y* or *N*)	—
		28. Following **PBXESGD**, Leave This Field Blank	—
		29. Following **PBXAW**, Leave This Field Blank	—
		30. Following **BN**, Enter Billing Number Code (3-, 4- or 10-Digit Number or Blank)	—
		31. Following **BRL**, Enter Billing Record Length Code (*S, L* or Blank)	—
		32. Following **EAS**, Enter Equal Access Signaling Code (*N, A, E, D* or *R*)	—
		33. Following **FAR4E**, Enter Whether Far End Is *4ESS* Switch (*Y* or *N*)	—
		NOTE: From Routing Group Supervisor or Equivalent Source, Obtain Information for Steps 10.34 Through 10.35 to Be Entered on RC Worksheet Form 100	—
		34. Following **MTSC**, Enter Multiple Treatment Screening Class Code (*0-63*)	—
		35. Following **GNSC**, Enter Go/No Go Screening Class Code (*0-3*)	—

DO THE ITEMS BELOW IN THE ORDER LISTED . . . . . FOR DETAILS, GO TO			
	CMS CODE		
10 (Contd)		**NOTE:** From MAC Supervisor or Equivalent Source, Obtain Information for Steps 10.36 Through 10.38 To Be Entered on RC Worksheet Form 100	_
		36. Following **ADIG**, Leave This Field Blank	_
		37. Following **GLARE**, Enter Glare Control Code (*A* or *N)*	_
		38. Following **INSEP**, Enter Incoming Traffic Separation Class Code (*0-255*)	_
		NOTE: From Trunk Operation Center (TOC) or Equivalent Source, Obtain Information for Steps 10.39 Through 10.49 To Be Entered on RC Worksheet Form 100	_
		39. Following **NEOTR**, Enter Near-End Operational Test Responsibility Code (*Y* or *N*)	_
		40. Following **CAREA**, Enter Control Area Code (*0-9*)	_
		41. Following **CPOS**, Enter Control Position Code (*0-9*)	_
		42. Following **OTSTT**, Enter Operational Through Switch Test Type (*CTX2, CTX3, SXS, SYNC, ATMB, T103* or *N*)	_
		43. If OTSTT Entry Is **N**, Following **OTSTN** Leave This Field Blank; Otherwise, Enter Operational Through Switch Test Number (*000-9999999*)	_
		44. Following **XTSTT**, Enter Transmission Through Switch Test Type (*T100, T102, T105* or *N*)	_
		45. If XTSTT Entry Is **N**, Following **XTSTN** Leave This Field Blank; Otherwise, Enter Transmission Through Switch Test Number (*000-9999999*)	_
		46. Following **OTMTT**, Enter Operational Terminating Test Type (*CTX2, CTX3, SXS, SYNC, T103* or *N*)	_
		47. If OTMTT Entry Is **N**, Following **OTMTN** Leave This Field Blank; Otherwise, Enter Operational Terminating Test Number (*000-9999999*)	_
		48. Following **XTMTT**, Enter Transmission Terminating Test Type (*T100, T102, T105* or *N*)	_
		49. If XTMTT Entry Is **N**, Following **XTMTN** Leave This Field Blank; Otherwise, Enter Transmission Terminating Test Number (*000-9999999*)	_
		50. Following **PCF**, Enter Point Code Format (*ATT* or *ANSI*)	_
		51. Following **DPC**, Leave This Field Blank	_

DO THE ITEMS BELOW IN THE ORDER LISTED . . . . . FOR DETAILS, GO TO			
	CMS CODE		
10 (Contd)		52. Following **TSGBBC**, Leave This Field Blank	—
		53. Following **FEOFC**, Enter Far-End Office Code (*000-999* or Blank)	—
		54. Following **FELATA**, Enter Far-End Local Access and Transport Area Code (*000-999* or Blank)	—
		55. Following **IWZ1**, Enter International World Zone 1 Code (*Y, N* or Blank)	—
		56. Following **LSST**, Enter LATA/State Screening State Code (Two Alphabetic Characters or Blank)	—
		57. Following **MEM**, Enter Trunk Hunt With Memory Code (*Y, N* or Blank)	—
		58. Following **CBNPR**, Enter Calling Party Number/Billing Number Default Presentation Restriction Code (*Y, N* or Blank)	—
		59. Following **DNP**, Enter Dialed Number Preferred Code (*Y, N* or Blank)	—
		60. Following **PSOLI**, Enter Prohibit Sending Originating Line Identity Code (*Y, N* or Blank)	—
		61. Following **ITC**, Enter Incoming Trunk Subgroup Class (*0-3* or Blank)	—
		62. Following **NPARINH**, Enter Inhibit NPA Reconstruction Code (*Y, N* or Blank)	—
		63. Following **WATSBN**, Enter WATS Billing Number (Ten Digit Number or Blank)	—
		64. Following **PSBN**, Enter Prohibit Sending Billing Number Code (*Y, N* or Blank)	—
		65. Following **PSCPN**, Enter Prohibit Sending Calling Party Number Code (*Y, N* or Blank)	—
		66. Following **ANISID**, Enter ANI/SID Request Code (*NONE, ANI, PANI, PSID, REQ, SID* or Blank)	—
		67. Following **WANISID**, Enter WATS Service ANI/SID Request Code (*NONE, ANI, PANI, PSID, REQ, SID* or Blank)	—
		68. Following **PSUUI**, Enter Prohibit Sending User-to-User Information Code (*Y, N* or Blank)	—
		69. Following **APS**, Enter Accunet® Packet Service Code (*Y, N,* or Blank)	—
		70. Following **CHNEG**, Leave This Field Blank	—
		71. Following **PSATP**, Enter Prohibit Sending Access Transport Parameters Code (*Y, N* or Blank)	—
		72. Following **DOFP**, Enter Disable Outgoing Fraud Prevention Code (*Y* or *N*)	—

DO THE ITEMS BELOW IN THE ORDER LISTED . . . . . FOR DETAILS, GO TO			
	CMS CODE		
10 (Contd)		73. Following **BFTIS**, Enter Backward Failure Treatment all ISUP With 4E15 and Later Generics (*ANN*, *REL*, or Blank)	_
		74. Following **BFINI**, Enter Backward Failure Treatment not all ISUP With 4E15 and Later Generics (*ANN*, *REL*, or Blank)	_
		75. Following **INCID**, Enter Number of Carrier ID Digits to be Received	_
		76. Following **ONCID**, Enter Number of Carrier ID Digits to be Sent	_
		77. Following **MULAW**, Enter A-law/Mu-law Encoding	_
		78. Following **CID**, Enter Carrier ID (0000 to 9999 or Blank)	_
		79. Following **DATA**, Enter Data Service Code (*Y, N* or Blank)	_
		80. If **TOT** Entry Is *OCC*, Following **BFTIS** Enter Backward Failure Treatment All ISUP Code (*ANN, REL,* or Blank)	_
		81. If TOT Entry Is *OCC*, Following **BFTNI** Enter Backward Failure Treatment Not All ISUP Code (*ANN, REL,* or Blank)	_
		82. Following **SINDEX**, Enter Access Charge Verification Sampling Rate Index Code (*0-2, 4, 8, 16, 32, 64* or Blank)	_
		83. Following **CODSC**, Enter CPE Outgoing Disconnect Code (*Y* or *N*)	_
		84. Following **IT**, Enter Intertoll Treatment Code (*Y, N* or Blank)	_
		85. Following **PBXNWW**, Enter PBX No Wait For Wink Code (*Y, N* or Blank)	_
		86. Following **S1**, Enter Spare Code (*0-7* or Blank)	_
		87. Following **S2** through **S10**, Enter Spare Code (*Y, N* or Blank)	_
		88. If Performing Circuit Orders in an AT&T Switching Network, Complete the Following Entries On RC Worksheet Form 100:	_
		1. Following **VDCAP**, Refer to PTG-4 for Valid Entries	_
		2. Following **DATAF**, Refer to PTG-4 for Valid Entries	_
		3. Following **FEAREA**, Refer to PTG-4 for Valid Entries	_

DO THE ITEMS BELOW IN THE ORDER LISTED . . . . . FOR DETAILS, GO TO			
	CMS CODE		
10 (Contd)		4. Following **FESWID**, Refer to PTG-4 for Valid Entries	—
		5. Following **EXSEQ**, Refer to PTG-4 for Valid Entries	—
		6. Following **SBRIV**, Refer to PTG-4 for Valid Entries	—
		7. Following **GSDN**, Refer to PTG-4 for Valid Entries	—
		8. Following **GSDNPHSE**, Refer to PTG-4 for Valid Entries	—
		9. Following **SBRIV**, Refer to PTG-4 for Valid Entries	—
		10. Following **BNPT**, Refer to PTG-4 for Valid Entries	—
		11. Following **WRNTP**, Refer to PTG-4 for Valid Entries	—
		12. Following **CMERGE**, Refer to PTG-4 for Valid Entries	—
		13. Following **PRIT**, Refer to PTG-4 for Valid Entries	—
		14. Following **MEGC**, Refer to PTG-4 for Valid Entries	
		15. Following **SDNA**, Refer to PTG-4 for Valid Entries	—
		16. Following **OWAT**, Refer to PTG-4 for Valid Entries	—
		17. Following **CBC**, Refer to PTG-4 for Valid Entries	—
		18. Following **DDD**, Refer to PTG-4 for Valid Entries	—
		19. Following **IDDD**, Refer to PTG-4 for Valid Entries	—
		20. Following **FOSPS**, Refer to PTG-4 for Valid Entries	—
		21. Following **CCIF**, Refer to PTG-4 for Valid Entries	—
		22. Following **HYBRD**, Refer to PTG-4 for Valid Entries	—
		23. Following **ITELCO**, Refer to PTG-4 for Valid Entries	—
		24. Following **S5DIG**, Refer to PTG-4 for Valid Entries	—
		25. Following **D3DBN**, Refer to PTG-4 for Valid Entries	—
		26. Following **CSCSET**, Refer to PTG-4 for Valid Entries	—

DO THE ITEMS BELOW IN THE ORDER LISTED . . . . . FOR DETAILS, GO TO			
	CMS CODE		
		27. Following **ANCR**, Refer to PTG-4 for Valid Entries	—
		28. Following **ACCID**, Refer to PTG-4 for Valid Entries	—
		29. Following **ACCDTA**, Refer to PTG-4 for Valid Entries	—
		30. Following **PSTNG**, Refer to PTG-4 for Valid Entries	—
		31. Following **FLDSPR**, Refer to PTG-4 for Valid Entries	—
		32. Following **SDNPLAN**, Refer to PTG-4 for Valid Entries	—
		33. Following **SKSP**, Refer to PTG-4 for Valid Entries	—
		34. Following **TRIDX**, Refer to PTG-4 for Valid Entries	—
		89. Following **REMARKS**, Enter *CON* Followed by Applicable CON Number	
11		At RCDT, Enter Trunk-Type Recent Change Data Message (RCDM) From RC Worksheet Form 100 Into Current Translations (**OP:RCFORM 100!**)	DLP-536
12		Verify Current Translations Data for Establishing 2W TSG (**VER:TSG:CIN a!** Where a = TSG CIN)	DLP-537
13		On *4ESS* **SWITCH RECENT CHANGE LOG SHEET**, Place Check Mark in **RCDM STATE — ACT** and **VERIFY — MAC** Columns for RCDM Entered and Verified	—
14		If RC Worksheet Form 104 Was Completed To Add Additional TFNB to TSG, Perform The Following:	—
		1. At RCDT, Enter Trunk-Type RCDM From RC Worksheet Form 104 Into Current Translations (**OP:RCFORM 104!**)	DLP-536
		2. Verify Current Translations Data To Add TFNB to TSG (**VER:TFNB:TG a!** Where a = TSG CIN)	DLP-516
		3. On *4ESS* **SWITCH RECENT CHANGE LOG SHEET**, Place Check Mark in **RCDM STATE — ACT** and **VERIFY — MAC** Columns for RCDM Entered and Verified	—
		4. If There Are Additional RC Worksheet Forms 104 To Be Entered, Repeat From Step 14.1	—
15		Identify All Routing Data Blocks (RDBs) Associated With MF TSG (**VER:RDBLIST;ALL:TSG a!** Where a = TSG CIN)	DLP-518

DO THE ITEMS BELOW IN THE ORDER LISTED . . . . . FOR DETAILS, GO TO			
	CMS CODE		
16		Complete Entries on *4ESS* **SWITCH RECENT CHANGE LOG SHEET** To Add 2W CCS TSG To Existing RDBs As Follows:	_
		1. Assign RC Order Number (ORNU) For RC Worksheet Form 513	DLP-522
		2. Under Column Heading **RCDM WORKSHEET** , Enter *513*	_
		3. Under Column Heading **DESCRIPTION OF RECENT CHANGE ORDER**, Enter *ADDS 2W CCS TSG TO EXISTING RDBs* (CIN of TSG)	_
17		Obtain Blank Copy of RC Worksheet Form 513 and Complete Entries on Form 513 To Add CCS TSG To Existing RDBs As Follows:	_
		1. Following RC:RDB;CHG;OPT(ADD1TSG), Enter *ACT*	_
		2. Following ORNU, Enter Assigned Order Number (ORNU)	_
		3. Under REFTSG, Enter TSG CIN of Referenced TSG	_
		4. Following INSERT NEWTSG, Enter *A*	_
		5. Under NEWTSG, Enter TSG CIN of New TSG	_
		6. Following DNHRTYPE, Enter Dynamic Non-Hierarchical Routing Type Code (*ED, EV, RT* or Blank)	_
		7. Under RDBI, Enter Routing Data Block Index Code (*1-8191*)	_
		8. Following REMARKS, Enter *CON* Followed By Applicable CON Number	_
		9. If There Are Still RDBs To Be Added, Repeat From Step 16	_
18		At RCDT, Enter Trunk Type Recent Change Data Message (RCDM) From RC Worksheet Form 513 Into Current Translations (OP:RCFORM 513!)	DLP-536
19		Verify Current Translations Data To Add CCS TSG To Existing RDBs (VER:RDBLIST;ALL:TSG a! Where a = TSG CIN)	_
20		On *4ESS* **SWITCH RECENT CHANGE LOG SHEET**, Place Check Mark In **RCDM STATE — ACT** and **VERIFY — MAC** Columns For RCDM Entered and Verified	_
21		Notify Far-End and Coordinate Activity To Delete Trunks From MF TSG and Add Trunks To CCS TSG	_

DO THE ITEMS BELOW IN THE ORDER LISTED . . . . . FOR DETAILS, GO TO

	CMS CODE		
22		Select As Many Trunks As Applicable and Set Maintenance State of Trunks to Circuit Administration Disabled (CAD.DSA) (SET:TRKSTAT CAD.DSA,CIN a:TSG! Where a = TSG CIN)	DLP-561
23		Complete Entries On *4ESS* **SWITCH RECENT CHANGE LOG SHEET** To Delete Trunks From MF TSG As Follows:	—
		1. Assign RC Order Number (ORNU) For RC Worksheet Form 202	DLP-522
		2. Under Column Heading **RCDM WORKSHEET**, Enter *202*	—
		3. Under Column Heading **DESCRIPTION OF RECENT CHANGE ORDER**, Enter *DELETES 2W TRUNKS FROM MF TSG* (CIN of TSG)	—
24		Obtain Blank Copy of RC Worksheet Form 202 and Complete Entries on Form 202 To Delete Trunks From MF TSG As Follows:	—
		1. Following RC:TRK;OUT;, Enter *ACT*	—
		2. Following ORNU, Enter Assigned ORNU	—
		3. Following TSG, Enter TSG Circuit Identification Name (CIN) From Display of TSG Characteristics for Activated CON	—
		4. Determine Quantity of Trunks (QTRK) To Be Deleted and First Traffic Number (FTFN) in Group of Trunks	—
		5. Under QTRK, Enter Quantity of Trunks To Be Deleted	—
		6. Under FTFN, Enter First TFN in Group of Trunks To Be Deleted	—
		7. Following REMARKS, Enter *CON* Followed by Applicable CON Number	—
		8. If There Are Still Trunks To Be Deleted, Repeat From Step 23	—
25		Complete Entries On *4ESS* **SWITCH RECENT CHANGE LOG SHEET** To Add Trunks To CCS TSG As Follows:	—
		1. Assign RC Order Number (ORNU) For RC Worksheet Form 203	DLP-522
		2. Under Column Heading **RCDM WORKSHEET**, Enter *203*	—
		3. Under Column Heading **DESCRIPTION OF RECENT CHANGE ORDER**, Enter *ADDS 2W TRUNKS TO CCS TSG* (CIN of TSG)	—

DO THE ITEMS BELOW IN THE ORDER LISTED . . . . . FOR DETAILS, GO TO			
	CMS CODE		
26		Obtain Blank Copy of RC Worksheet Form 200 and Complete Entries on Form 200 To Add Trunks To CCS TSG	DLP-533
27		At RCDT, Enter Trunk Type Recent Change Data Message (RCDM) From RC Worksheet Form 202 Into Current Translations (**OP:RCFORM 202!**)	DLP-536
28		Verify Current Translations Data To Delete Trunks From MF TSG (**VER:TSG:CIN a!** Where a = TSG CIN)	DLP-512
29		On *4ESS* **SWITCH RECENT CHANGE LOG SHEET**, Place Check Mark In **RCDM STATE — ACT** and **VERIFY — MAC** Columns For RCDM Entered and Verified	—
30		At RCDT, Enter Trunk Type Recent Change Data Message (RCDM) From RC Worksheet Form 203 Into Current Translations (**OP:RCFORM 203!**)	DLP-536
31		Verify Current Translations Data To Add Trunks To CCS TSG (**VER:TSG:CIN a!** Where a = TSG CIN)	DLP-512
32		On *4ESS* **SWITCH RECENT CHANGE LOG SHEET**, Place Check Mark In **RCDM STATE — ACT** and **VERIFY — MAC** Columns For RCDM Entered and Verified	—
33		Notify Far-End and Coordinate Testing of Trunks Added to CCS TSG	—
34		Set Maintenance State of All Trunks in CCS TSG to Active (ACT) (**SET:TRKSTAT ACT,CIN a:TSG!** Where a = TSG CIN)	DLP-562
35		If There Are Still Trunks to be Deleted From MF TSG and Added to CCS TSG, Repeat From Step 21	—
36		Complete Entries on *4ESS* **SWITCH RECENT CHANGE LOG SHEET** to Delete MF TSG From RDBs as Follows:	—
		1. Assign RC Order Number (ORNU) For RC Worksheet Form 514	DLP-522
		2. Under Column Heading **RCDM WORKSHEET**, Enter *514*	—
		3. Under Column Heading **DESCRIPTION OF RECENT CHANGE ORDER**, Enter *DELETES MF TSG FROM RDBs* (CIN of TSG)	—
37		Obtain Blank Copy of RC Worksheet Form 514 and Complete Entries on Form 514 to Delete MF TSG From RDBs as Follows:	—
		1. Following **RC:RDB;CHG:OPT** (DEL1TSG), Enter *ACT*	—

DO THE ITEMS BELOW IN THE ORDER LISTED . . . . . FOR DETAILS, GO TO			
	CMS CODE		
37 (Contd)		2. Following **ORNU**, Enter Assigned Order Number (ORNU)	—
		3. Under **ROUTE TO BE DELETED**, Enter TSG CIN of TSG To Be Deleted	—
		4. Under **RDBI**, Enter Routing Data Block Index To Be Deleted (*1-8191*)	—
		5. Following **REMARKS**, Enter *CON* Followed By Applicable CON Number	—
		6. If There Are Additional RDBs Associated With TSG To Be Deleted, Repeat From Step 36	—
38		At RCDT, Enter Trunk Type Recent Change Data Message (RCDM) From RC Worksheet Form 514 Into Current Translations (**OP:RCFORM 514!**)	DLP-536
39		Verify Current Translations Data To Delete MF TSG From RDBs (**VER:TSG:CIN a!** Where a = TSG CIN)	DLP-512
40		On *4ESS* **SWITCH RECENT CHANGE LOG SHEET**, Place Check Mark In **RCDM STATE — ACT** and **VERIFY — MAC** Columns For RCDMs Entered and Verified	—
41		Complete Entries on *4ESS* **SWITCH RECENT CHANGE LOG SHEET** To Delete MF TSG As Follows:	—
		1. Assign RC Order Number (ORNU) For RC Worksheet Form 106	DLP-522
		2. Under Column Heading **RCDM WORKSHEET**, Enter *106*	—
		3. Under Column Heading **DESCRIPTION OF RECENT CHANGE ORDER**, Enter *DELETES MF TSG* (CIN of TSG)	—
42		Obtain Blank Copy of RC Worksheet Form 106 and Complete Entries On Form 106 To Delete MF TSG As Follows:	—
		1. Following **RC:TSG;OUT**, Enter *ACT*	—
		2. Following **ORNU**, Enter Assigned Order Number (ORNU)	—
		3. Following **TSG**, Enter TSG CIN of TSG To Be Deleted	—
		4. Following **REMARKS**, Enter *CON* Followed By Applicable CON Number	—
43		At RCDT, Enter Trunk Type Recent Change Data Message (RCDM) From RC Worksheet Form 106 Into Current Translations (**OP:RCFORM 106!**)	DLP-536
44		Verify Current Translations Data To Delete MF TSG (**VER:TSG:CIN a!** Where a = TSG CIN)	DLP-512

DO THE ITEMS BELOW IN THE ORDER LISTED . . . . . FOR DETAILS, GO TO			
	CMS CODE		
45		On *4ESS* **SWITCH RECENT CHANGE LOG SHEET**, Please Check Mark In **RCDM STATE — ACT** and **VERIFY — MAC** Columns For RCDMs Entered and Verified	—
46		Obtain Copy of All RCDM Printouts From Recent Change Record Channel (RCREC) Printer	—
47	350	Update MAC Circuit Order Status in CMS to Completed (*CPD*) for CONs Assigned	DLP-543
48		If Reinitialization File Is Not Available, Establish Reinitialization File	DLP-544
49		Collect All RCDM Printouts and File in Reinitialization File in Order That They Were Entered Into System	—
50		Dispose of or File RC Worksheets per Local Procedure	—

GENERAL

The administrative procedures used to perform circuit order recent changes can vary from office to office depending on local procedures. Therefore, the procedures provided in this document are developed to manually perform the basic tasks of processing circuit order recent changes. It is assumed that all users of this documentation:

- Will have access to properly maintained administrative records such as Facility Assignment Records, CARTS Worksheets, Reinitialization files, etc.
- Will have available for immediate use an up-to-date *4ESS* Switch Translation Guide (TG-4) and Input/Output Message Manual for the current generic.
- Will establish and maintain a *4ESS* Switch Circuit Order Recent Change Log Book.

In addition to the procedures used to process circuit order recent changes, this documentation also provides procedures for Obtaining a CMS 961 Report; Coordinating the Write of Backup Office Data Assembler (ODA) Tapes; Mounting and Removing MTT Tape Cartridges; Obtaining Printouts of ORNUs Entered in the Buffer State and Rollback Area; Establishing and Auditing the Reinitialization File, etc.

CIRCUIT ORDER RECENT CHANGE DOCUMENTATION PHILOSOPHY

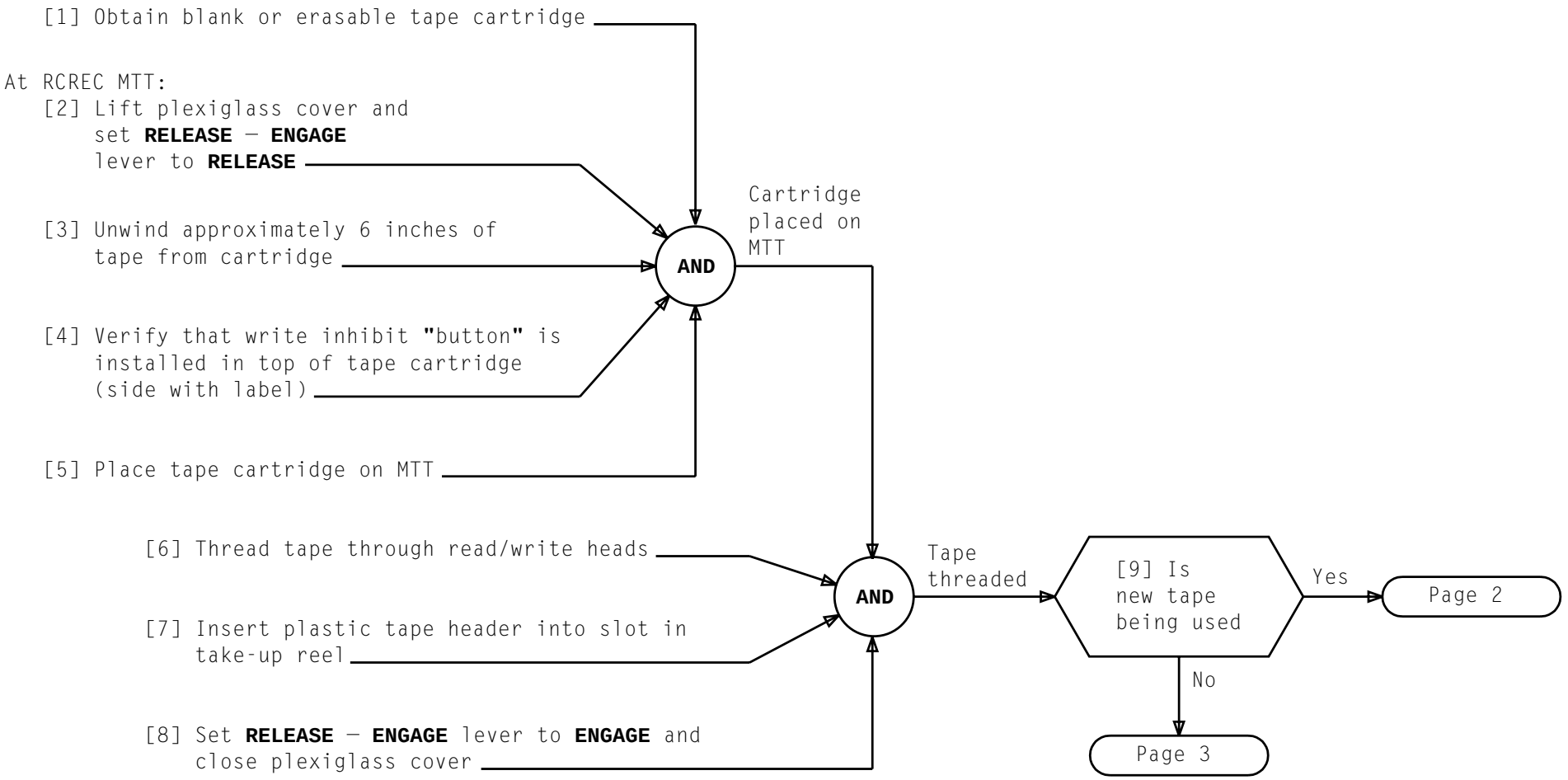

MOUNT MTT TAPE CARTRIDGE

Issue 1	JAN 1995
234-152-209	DLP
PAGE 1 of 3	500

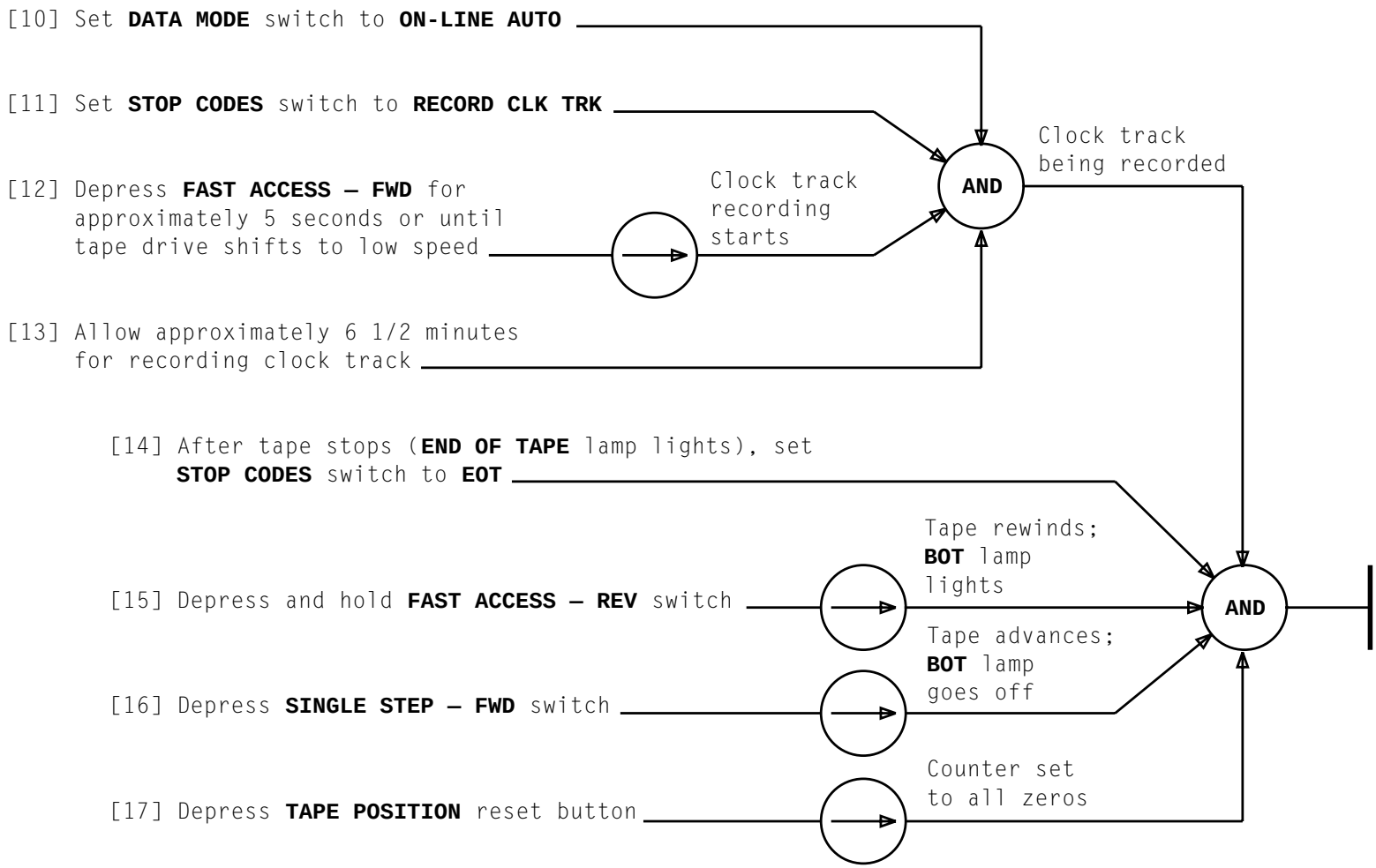

MOUNT MTT TAPE CARTRIDGE

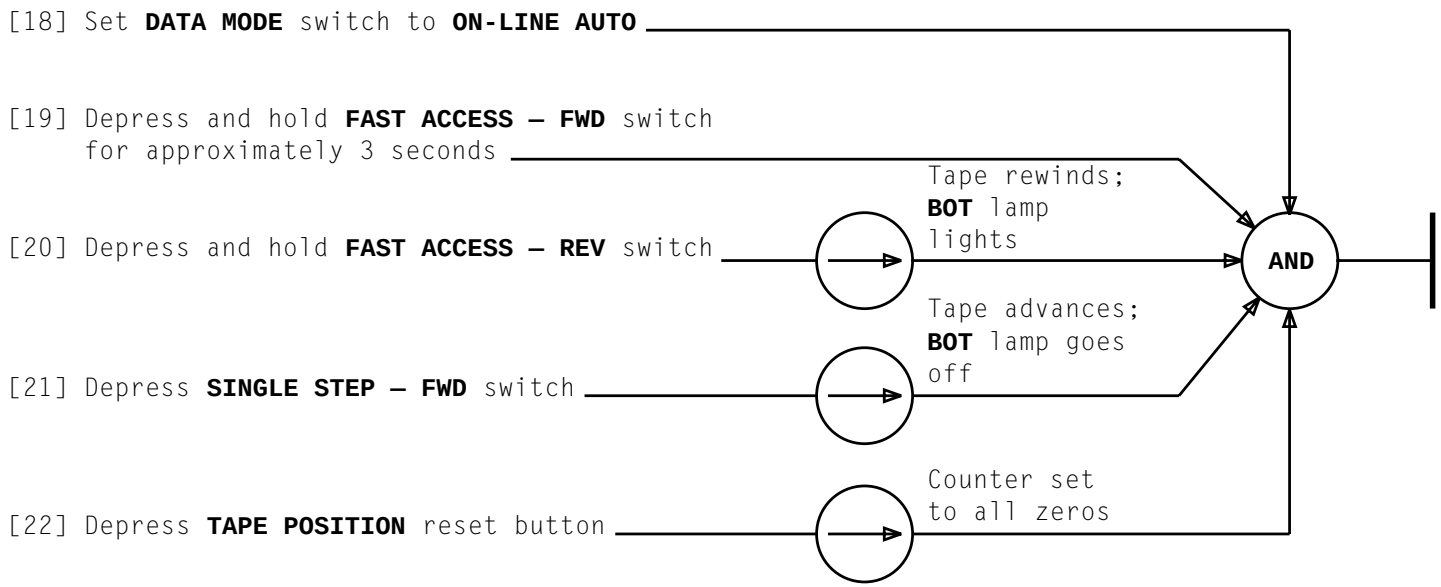

MOUNT MTT TAPE CARTRIDGE

AUDIT REINITIALIZATION FILE

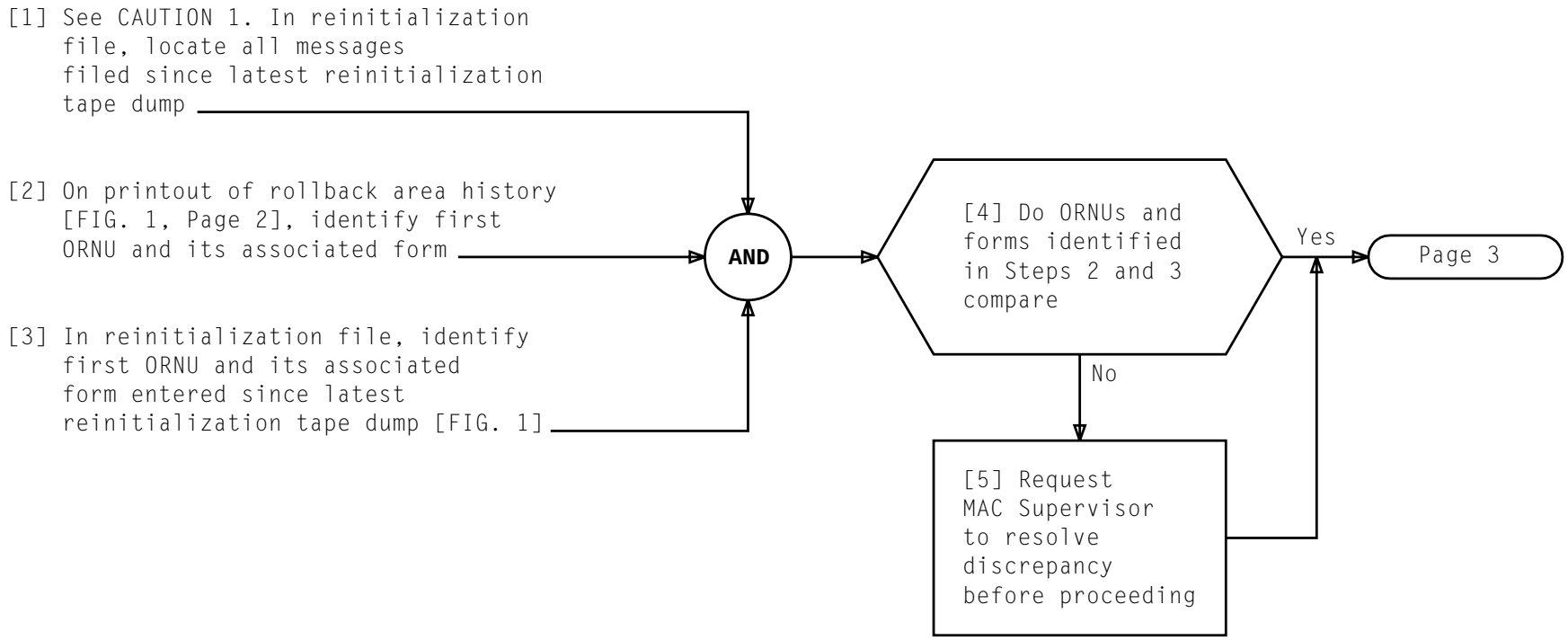

CAUTION 1
Do not change sequence of acceptance messages filed in reinitialization file at any time during this procedure

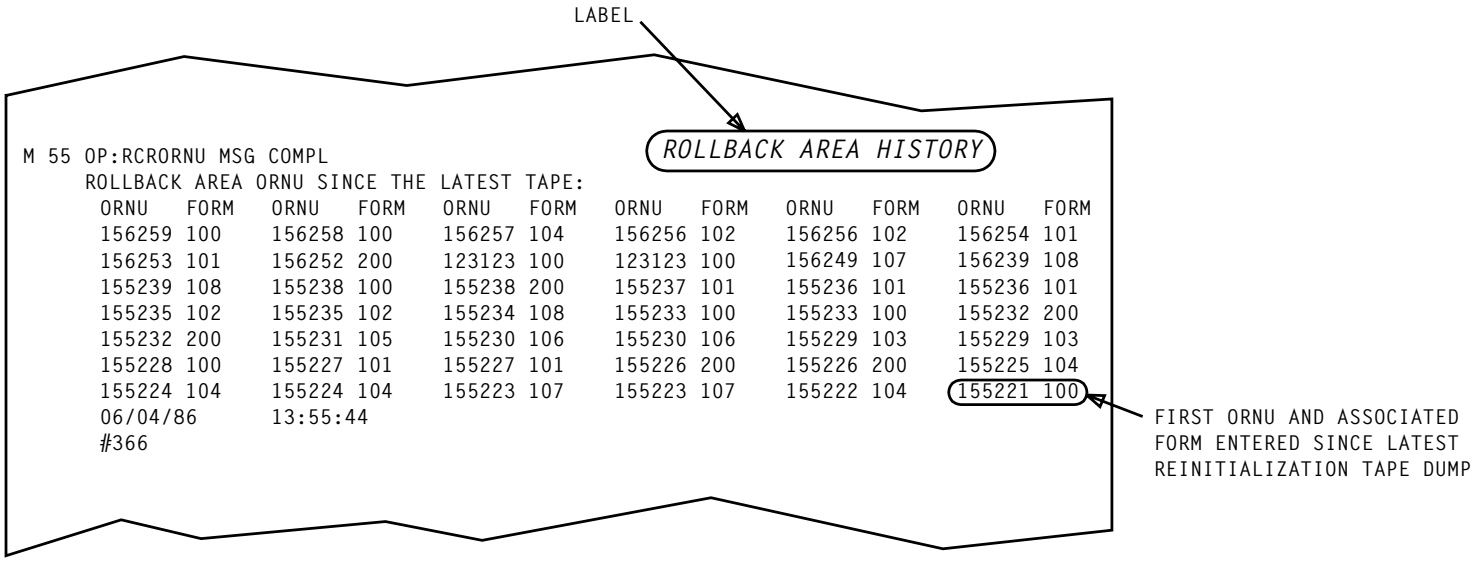

FIG. 1 — Sample Printout of Rollback Area History Showing RC ORNUs Entered Since Latest Reinitialization Tape Dump

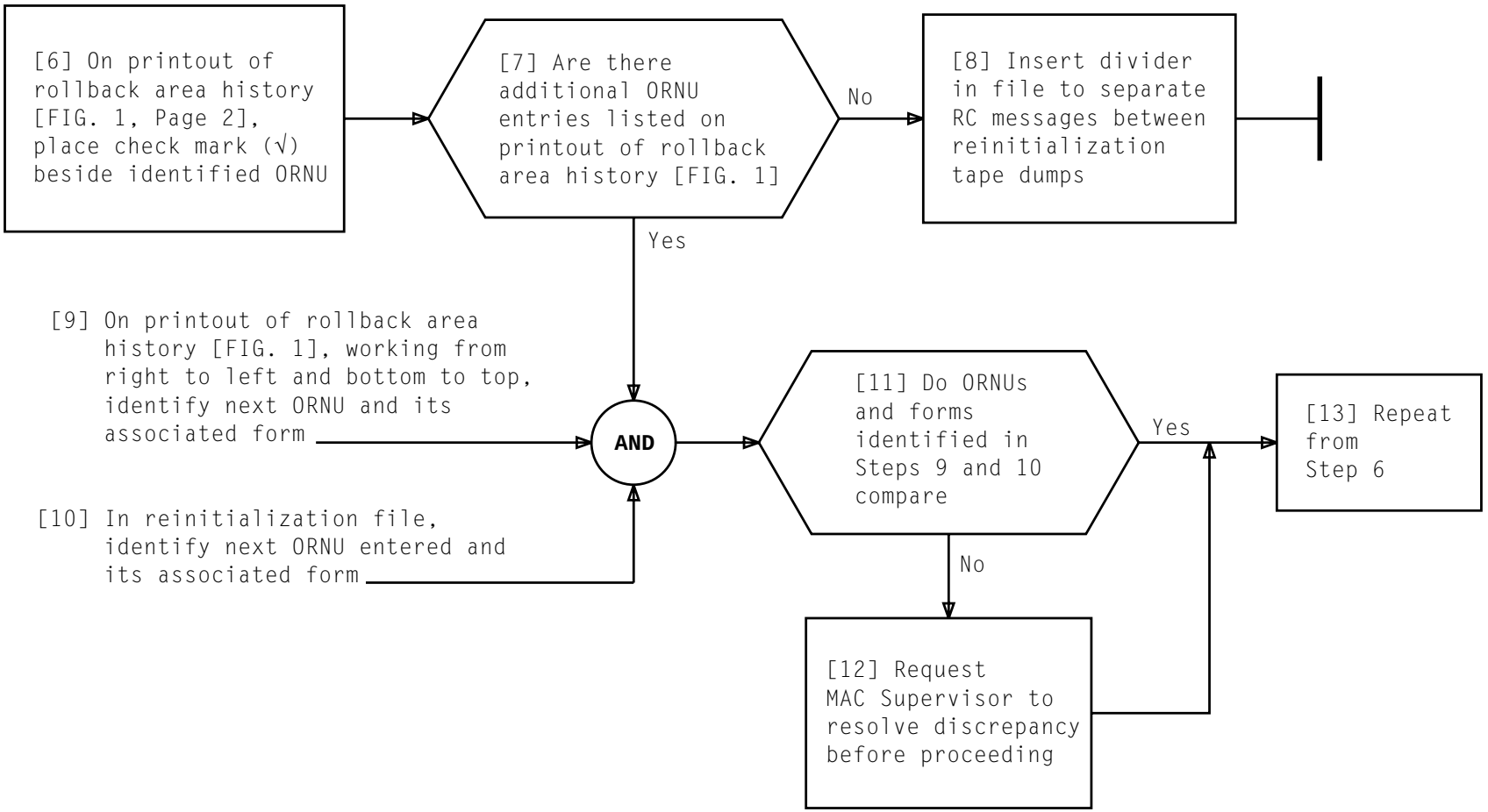

AUDIT REINITIALIZATION FILE

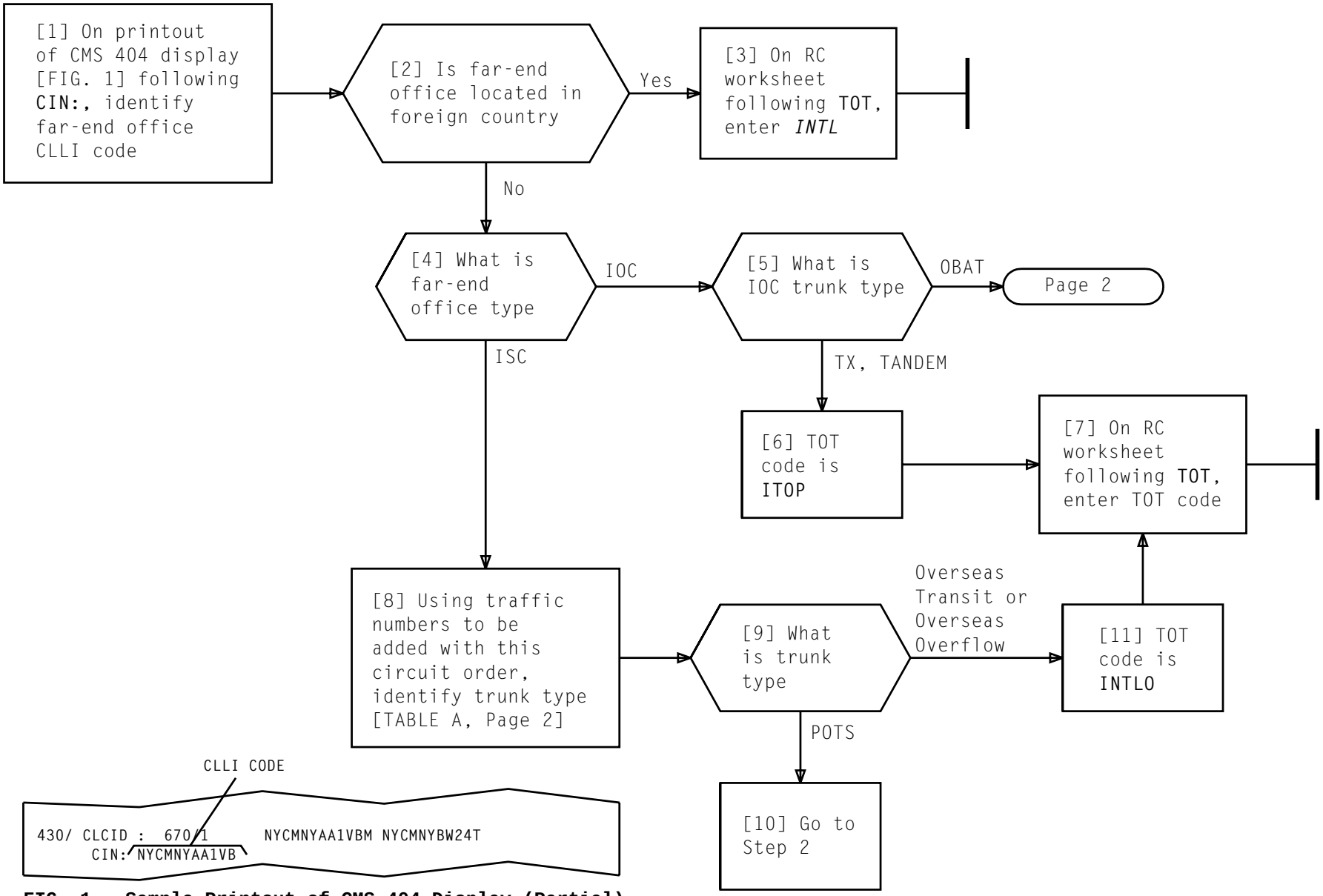

FIG. 1 – Sample Printout of CMS 404 Display (Partial)

IDENTIFY TYPE OF TRUNK (TOT) CODE (INTERNATIONAL)

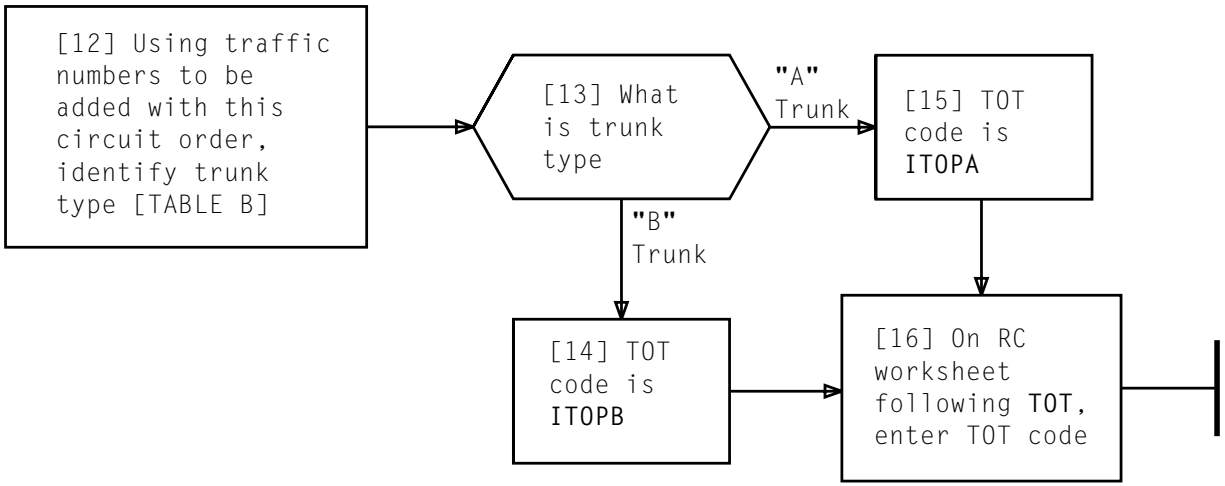

TABLE A

4ESS SWITCH
TRUNK NUMBERING PLAN
FOR TRUNKS BETWEEN
TWO ISCs

POTS
1 – 96
7001 – 7096
7101 – 7196
7201 – 7296
7301 – 7396

OVERSEAS OVERFLOW
7401 – 7496
7501 – 7596

OVERSEAS TRANSIT
6001 – 6096
6101 – 6196

TABLE B

4ESS SWITCH
TRUNK NUMBERING PLAN
FOR IOC OBATs

"A" TRUNK	"B" TRUNK
1 – 96	101 – 196
6001 – 6096	1101 – 1196
6101 – 6196	2101 – 2196
7001 – 7096	3101 – 3196
7101 – 7196	5201 – 5296
7201 – 7296	5301 – 5396
7301 – 7396	5601 – 5696
7401 – 7496	5701 – 5796
7501 – 7596	6601 – 6696

IDENTIFY TYPE OF TRUNK (TOT) CODE (INTERNATIONAL)

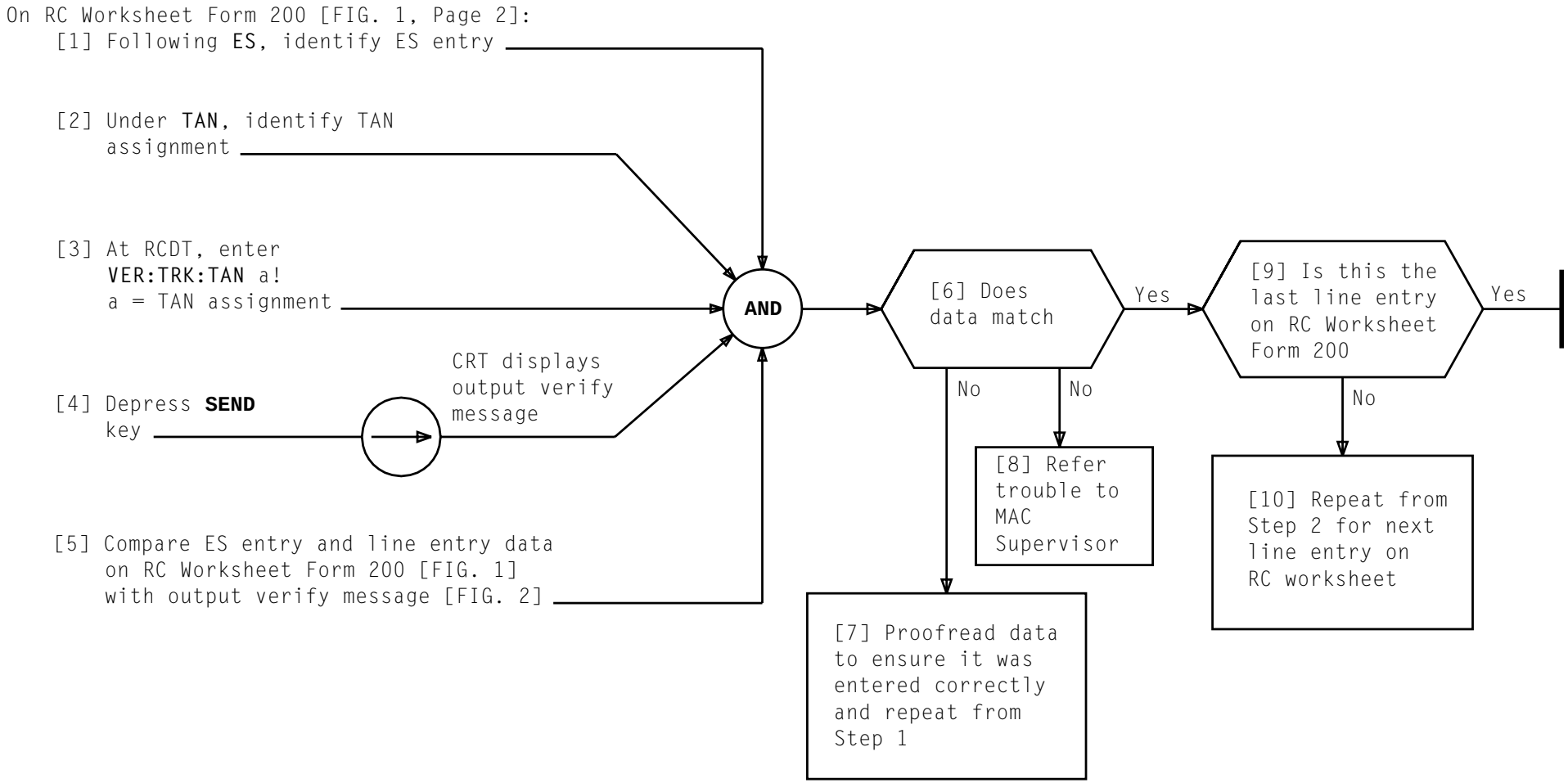

VERIFY CURRENT TRANSLATIONS DATA TO ADD INTERNATIONAL CCITT5 TRUNKS (NO ECHO SUPPRESSORS)

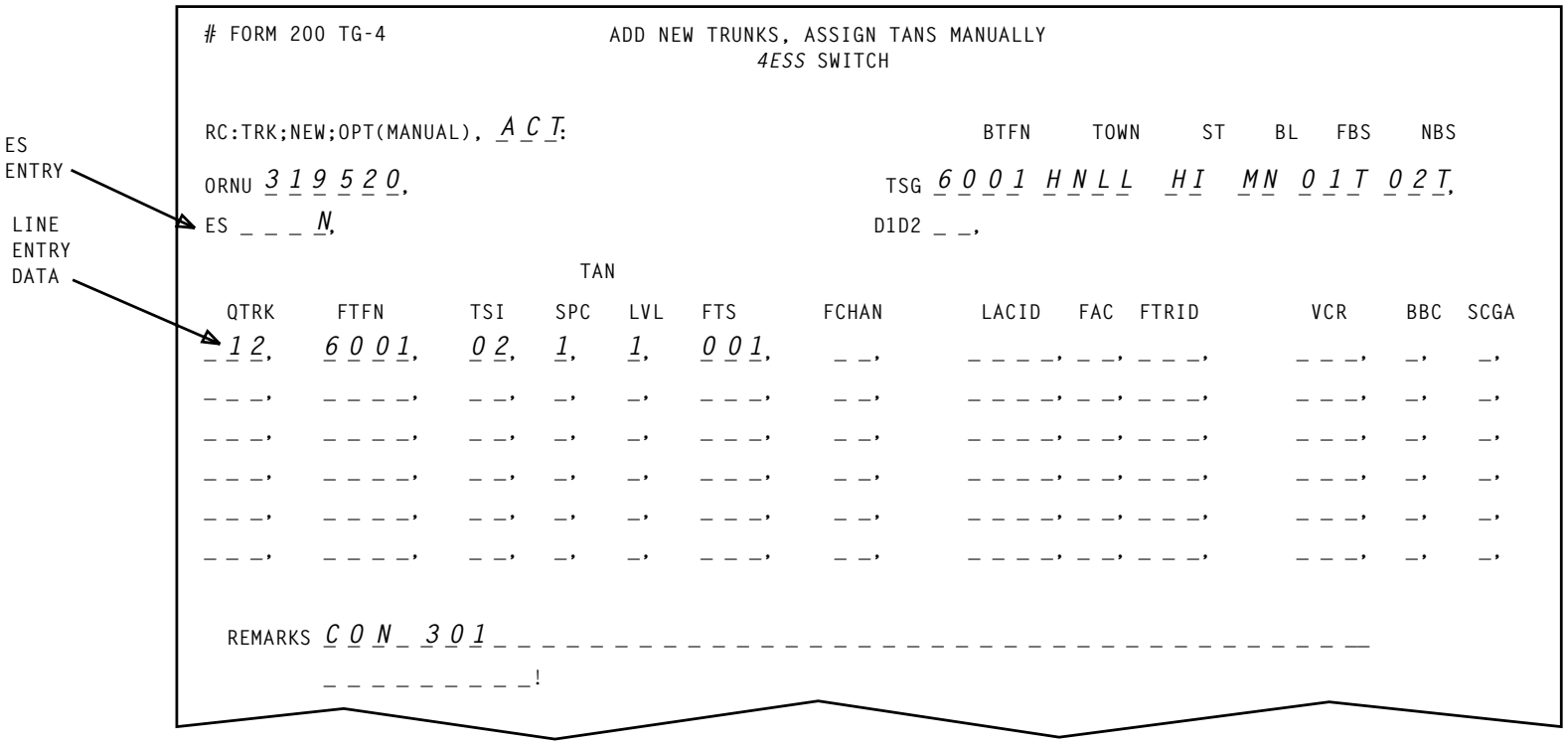

FIG. 1 — Sample of Completed RC Worksheet Form 200

VERIFY CURRENT TRANSLATIONS DATA TO ADD INTERNATIONAL CCITT5 TRUNKS (NO ECHO SUPPRESSORS)

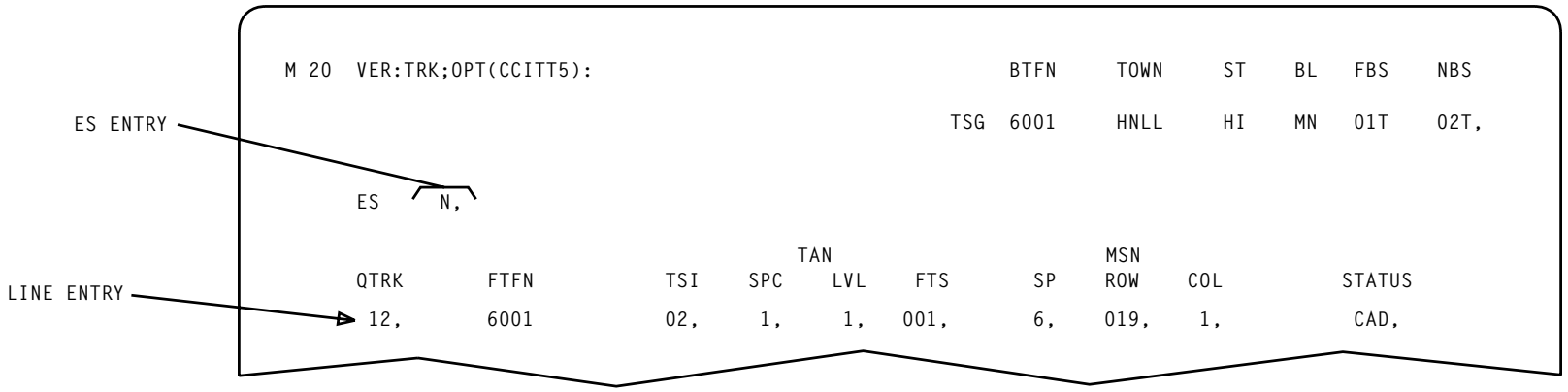

FIG. 2 — Sample CRT Display of Output Verify Message

VERIFY CURRENT TRANSLATIONS DATA TO ADD INTERNATIONAL CCITT5 TRUNKS (NO ECHO SUPPRESSORS)

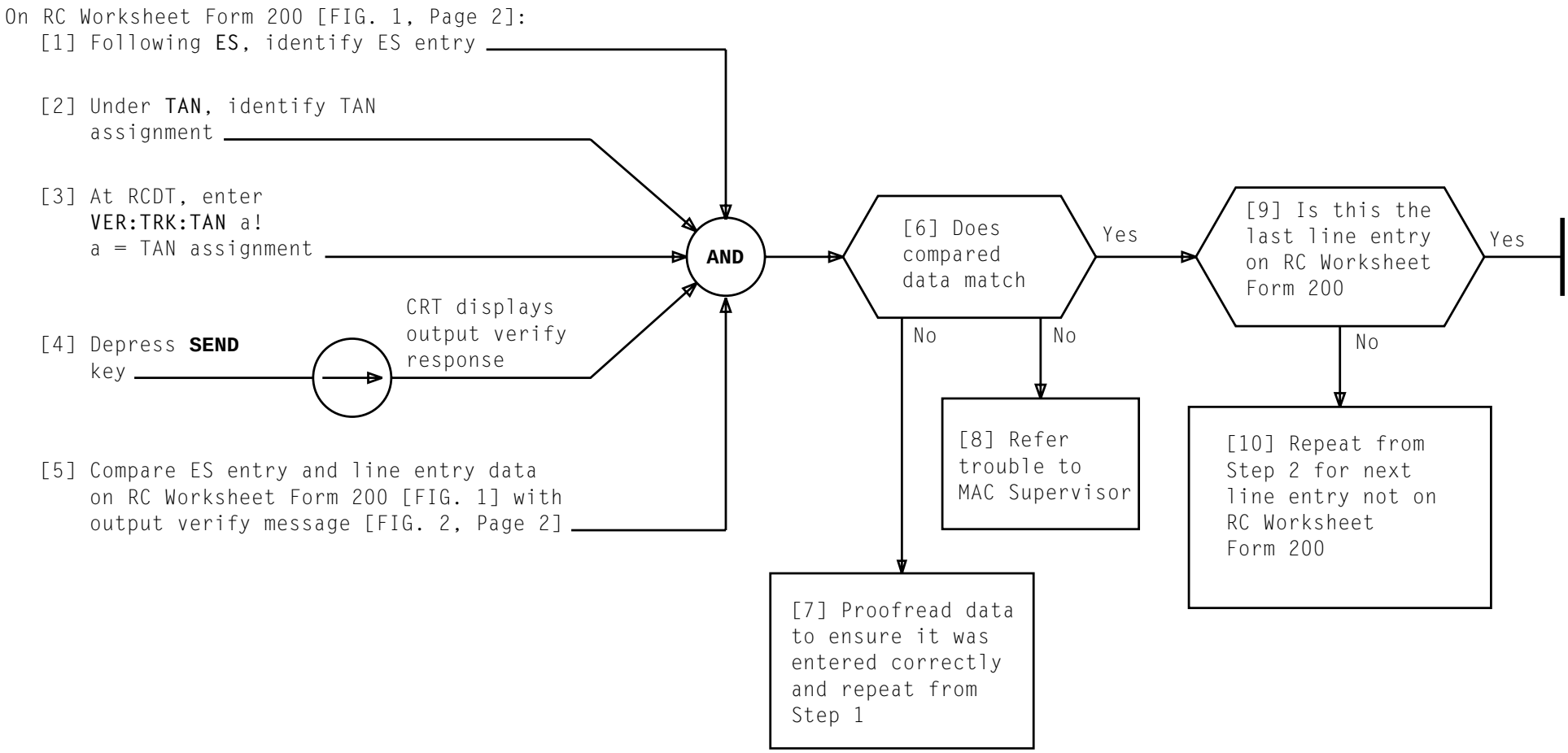

VERIFY CURRENT TRANSLATIONS DATA TO ADD INTERNATIONAL CCITT5 TRUNKS (WITH ECHO SUPPRESSORS)

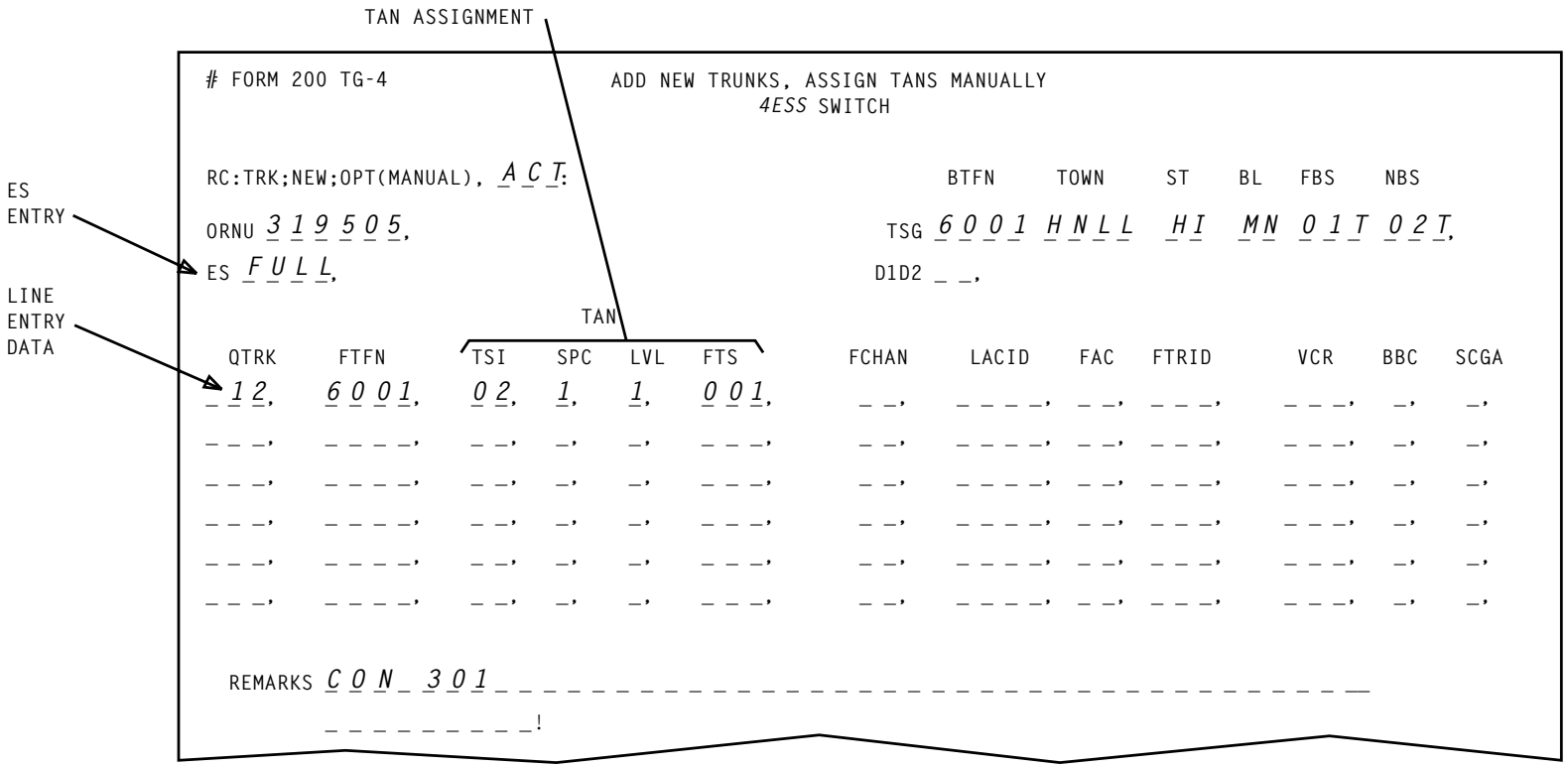

FIG. 1 — Sample of Completed RC Worksheet Form 200

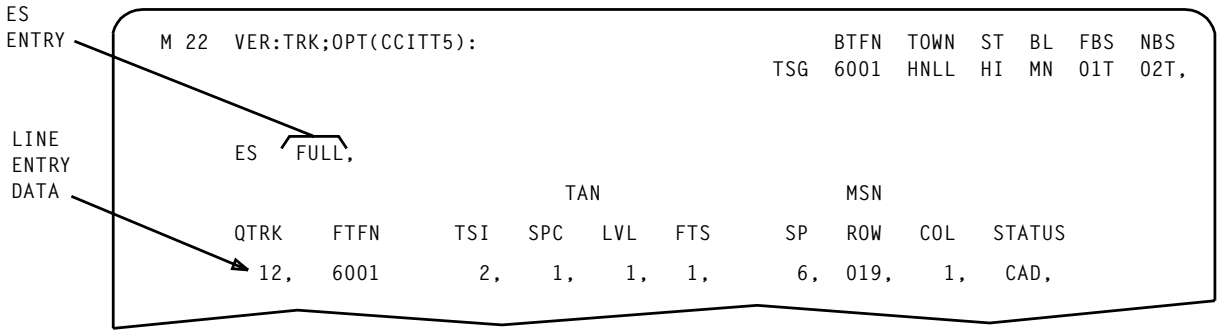

FIG. 2 — Sample CRT Display of Output Verify Message

VERIFY CURRENT TRANSLATIONS DATA TO ADD INTERNATIONAL CCITT5 TRUNKS (WITH ECHO SUPPRESSORS)

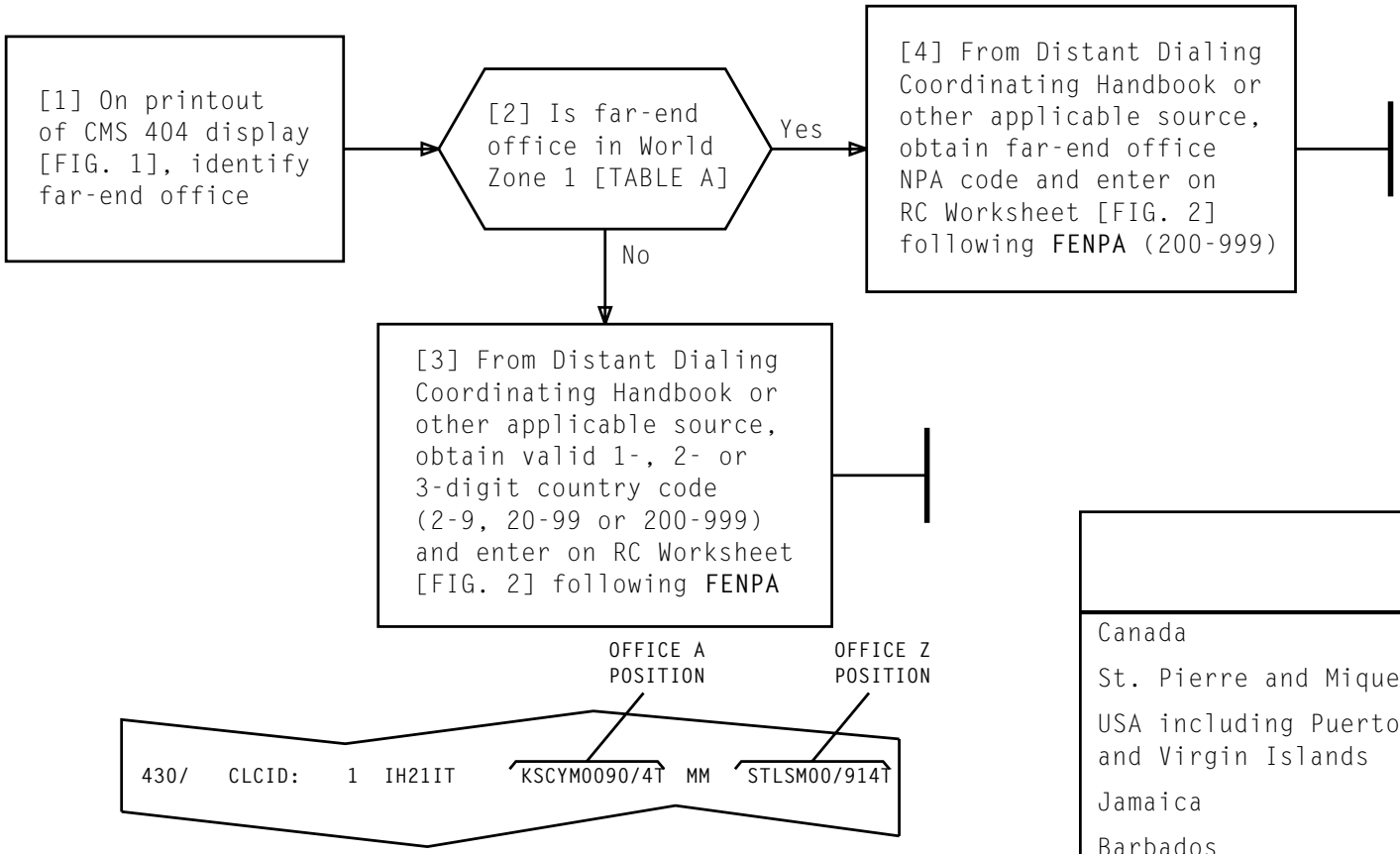

FIG. 1 — Sample Printout of CMS 404 Display (Partial)

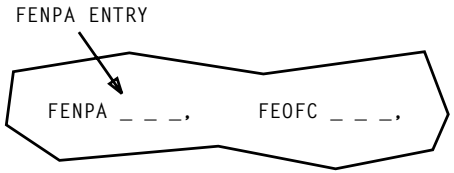

FIG. 2 — Sample of RC Worksheet (Partial)

TABLE A

WORLD ZONE 1

Canada	British Virgin Islands
St. Pierre and Miquelon	Bermuda
USA including Puerto Rico and Virgin Islands	Bahamas
Jamaica	Dominica
Barbados	Grenada
Antiqua	Montserrat
Cayman Islands	St. Kitts
	St. Lucia
	St. Vincent

ENTER FAR-END NUMBERING PLAN AREA (FENPA) (INTERNATIONAL)

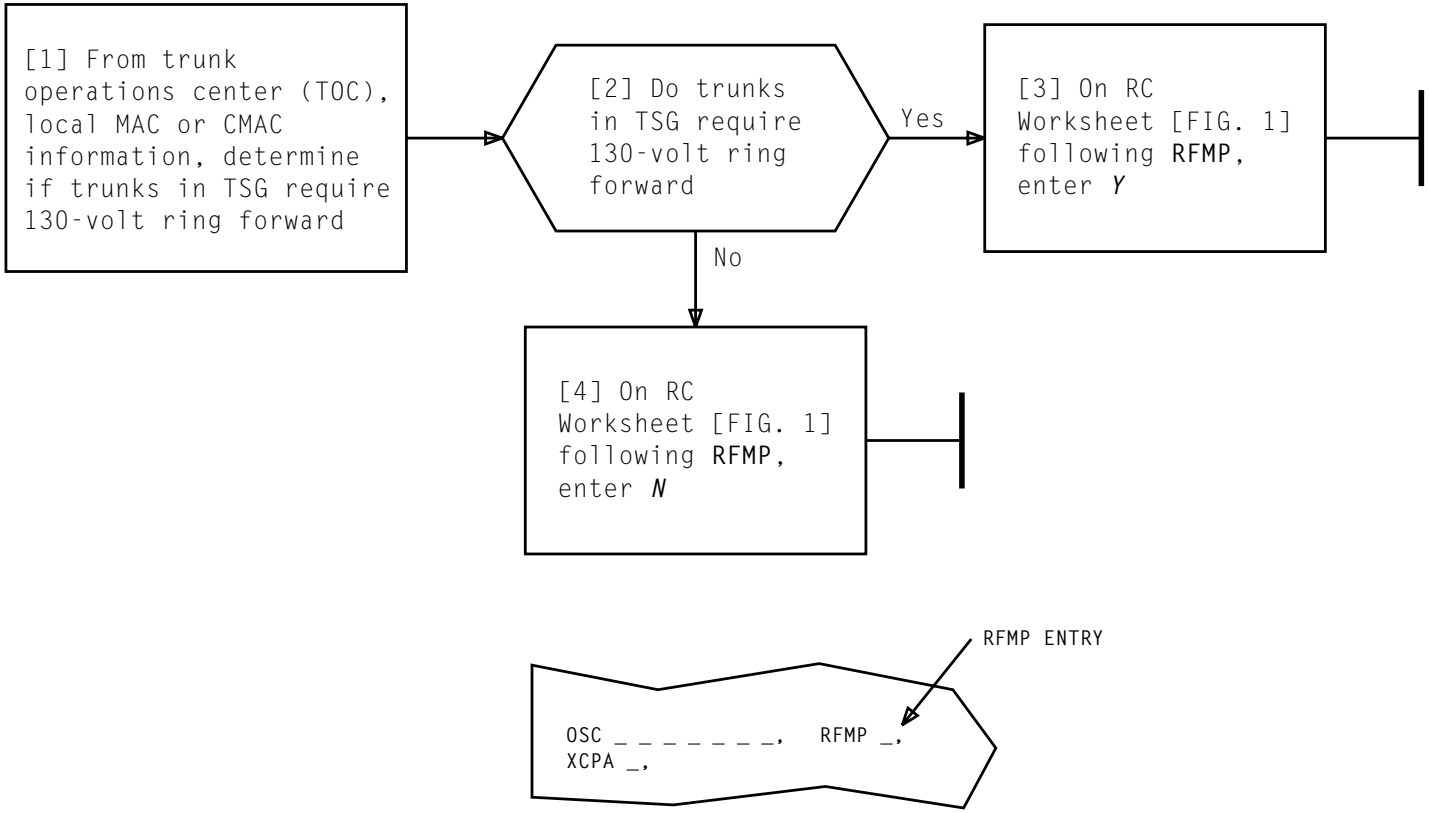

FIG. 1 — Sample of RC Worksheet (Partial)

ENTER RING FORWARD MISCELLANEOUS DISTRIBUTOR POINT (RFMP) CODE

[1] Obtain printout of CMS 404 display

On printout of CMS 404 display [FIG. 1]:

[2] Identify far-end office as being in office A or office Z position

AND

[3] See NOTE 1. Identify far-end office class code number (1, 2, 3, 4 or 5)

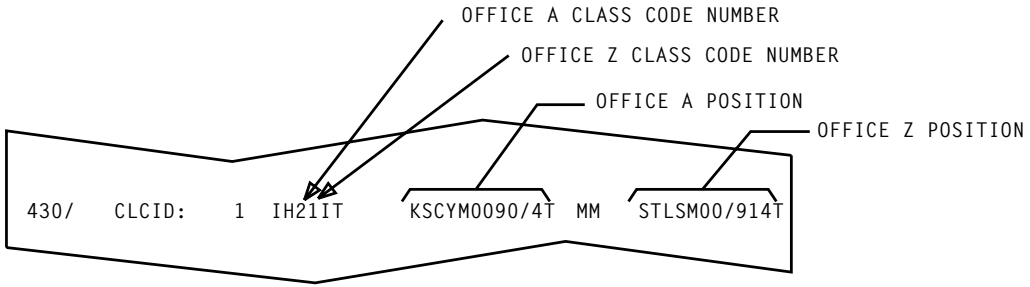

FIG. 1 – Sample Printout of CMS 404 Display (Partial)

NOTE 1
Class code 1 is the highest office class and class code 5 is the lowest office class

Issue 1	**JAN 1995**
234-152-209	**DLP**
PAGE 1 of 1	**507**

IDENTIFY FAR-END OFFICE CLASS CODE

[1] Obtain printout of CMS 405 display

[2] On printout of CMS 405 display [FIG. 1] following **ACTION:**, identify circuit order action code

AND

[3] Make note of circuit order action code and retain for later use

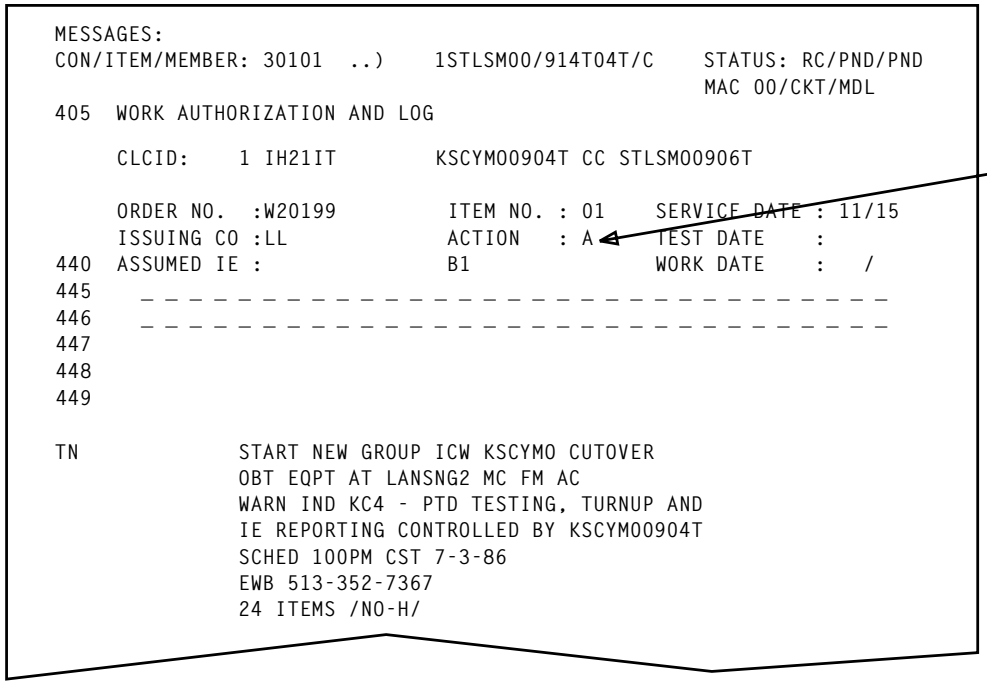

FIG. 1 — Sample Printout of CMS 405 Display

IDENTIFY CIRCUIT ORDER ACTION CODE

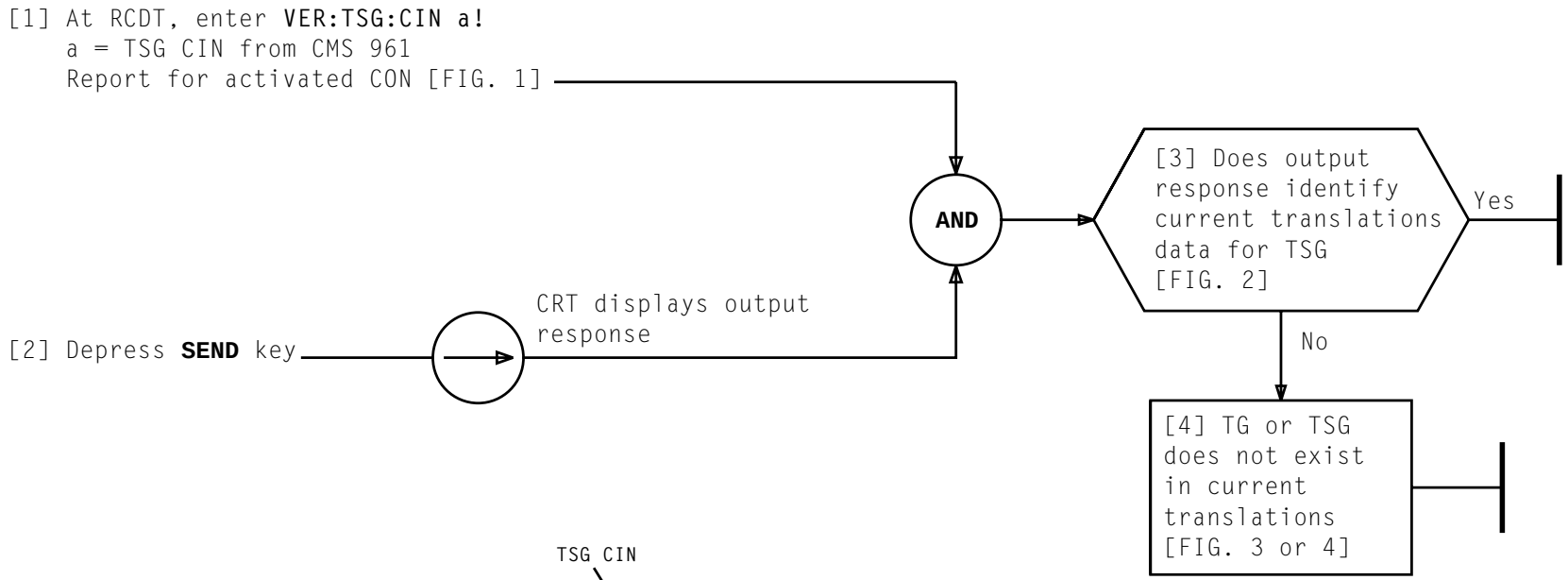

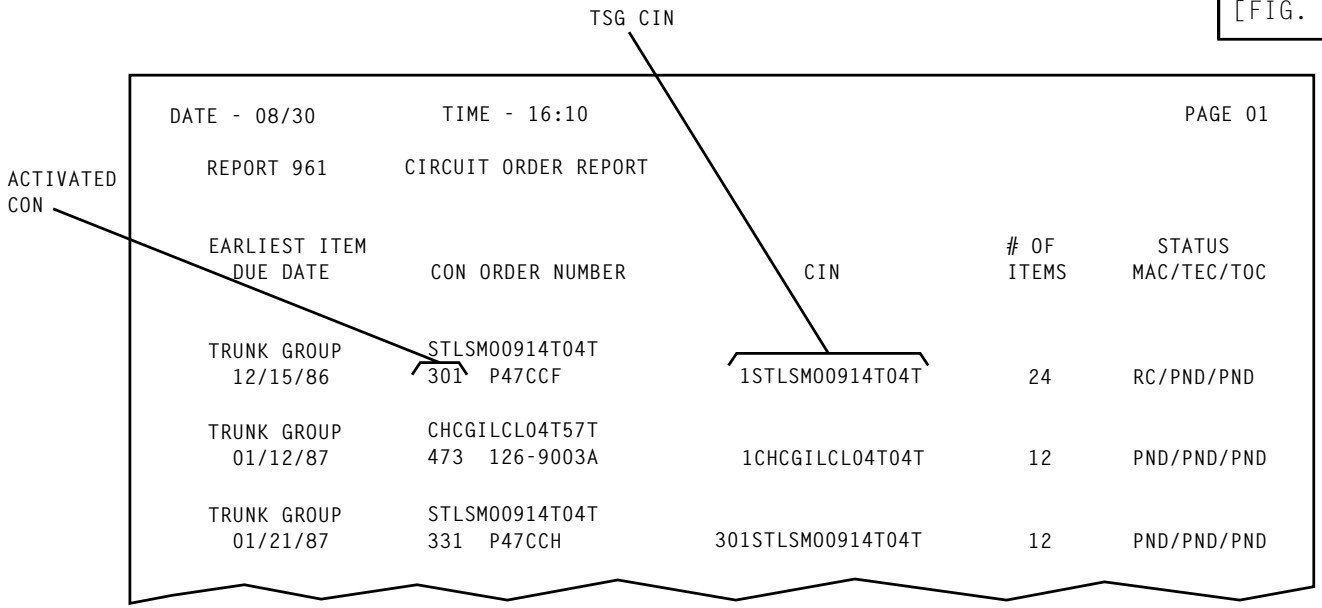

FIG. 1 — Sample Printout of CMS 961 Report

VERIFY TSG CIN

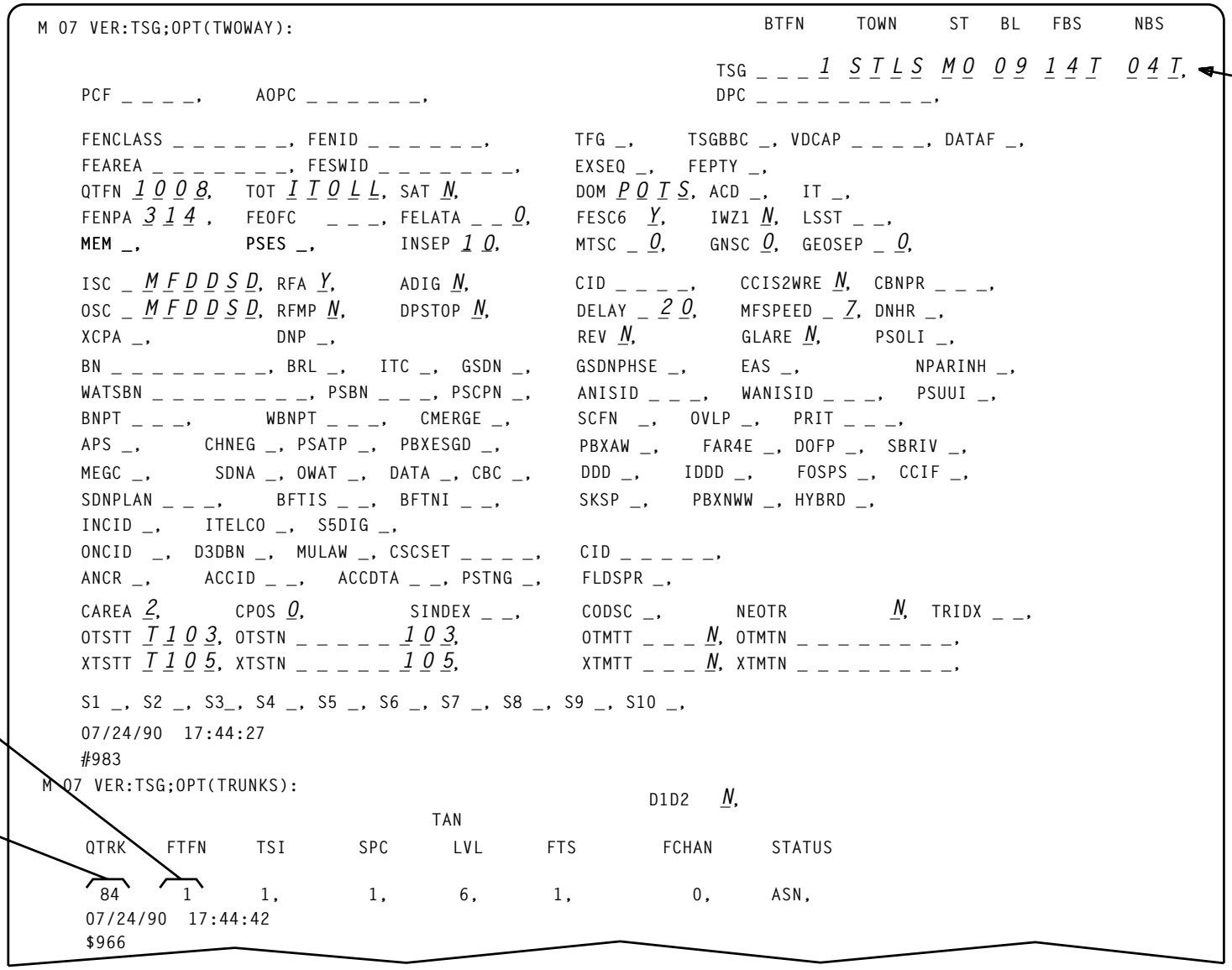

FIG. 2 — Sample CRT Display of TSG Characteristics and Associated Trunks

VERIFY TSG CIN

FIG. 3 – Sample CRT Display of Output Verify Message

FIG. 4 – Sample CRT Display of Output Verify Message

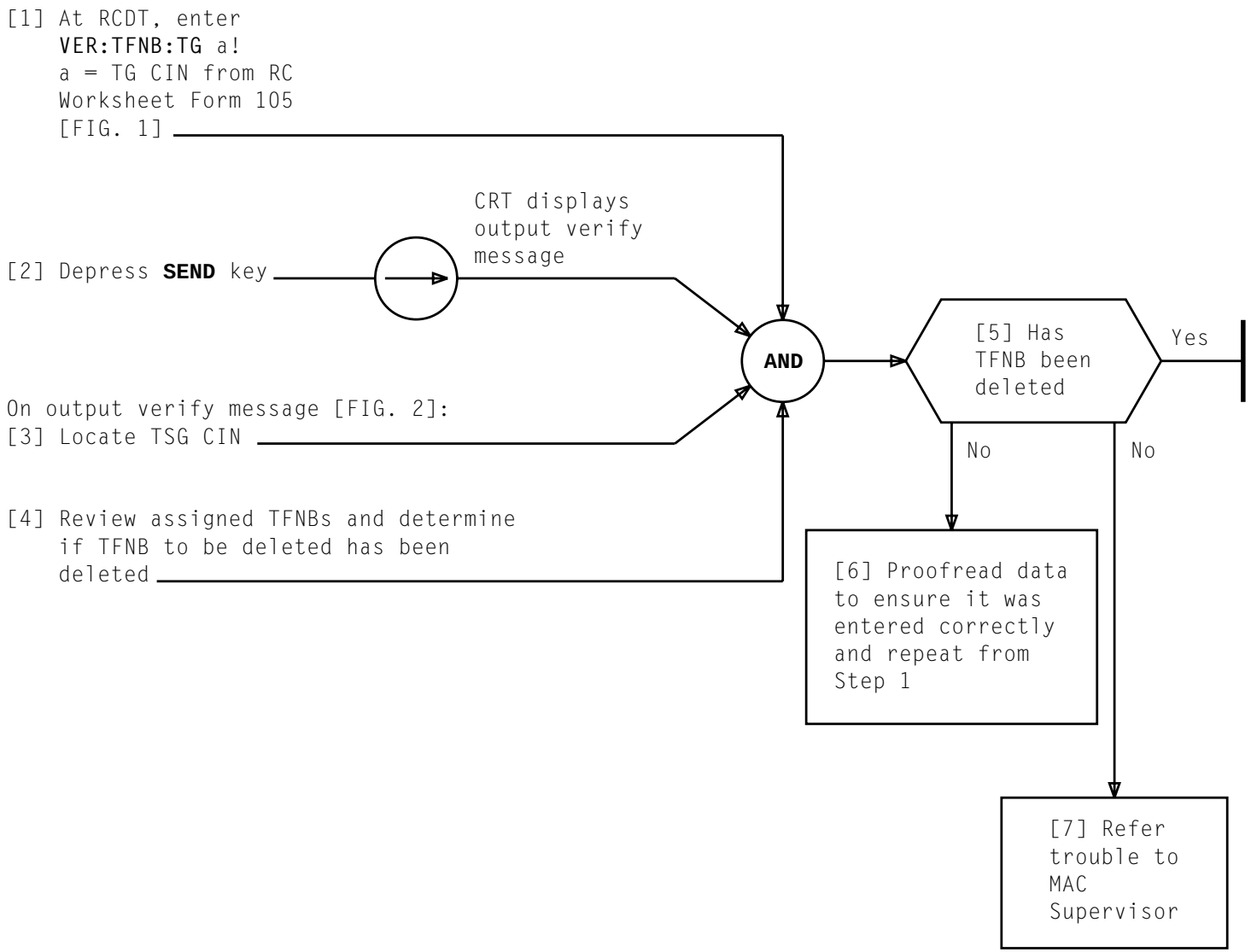

VERIFY CURRENT TRANSLATIONS DATA TO DELETE TRAFFIC NUMBER BLOCK (TFNB) FROM EXISTING TSG

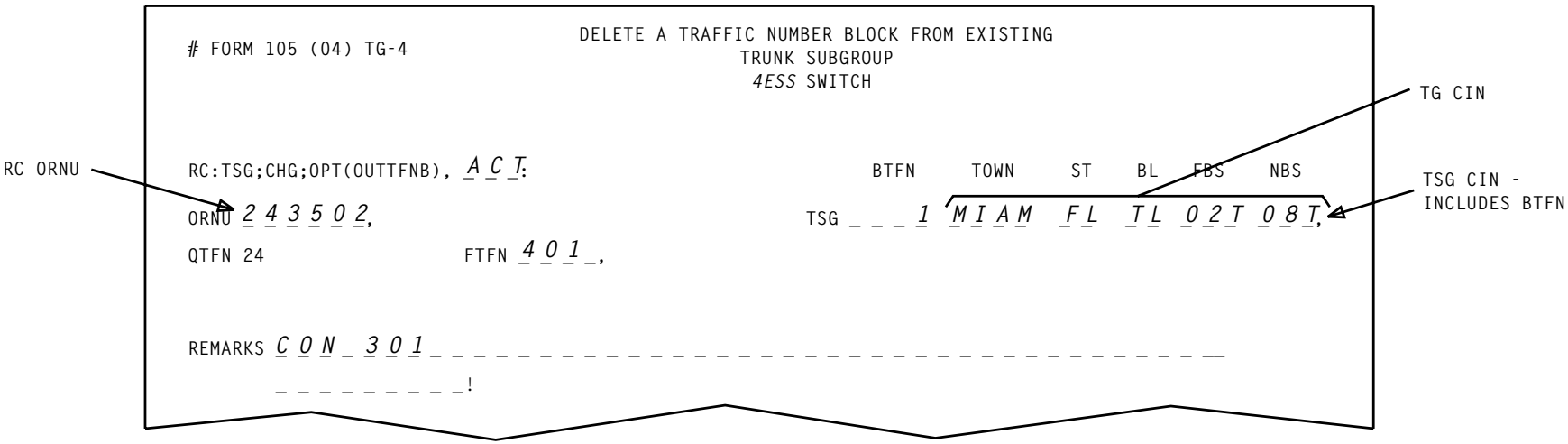

FIG. 1 — Sample of Completed RC Worksheet Form 105

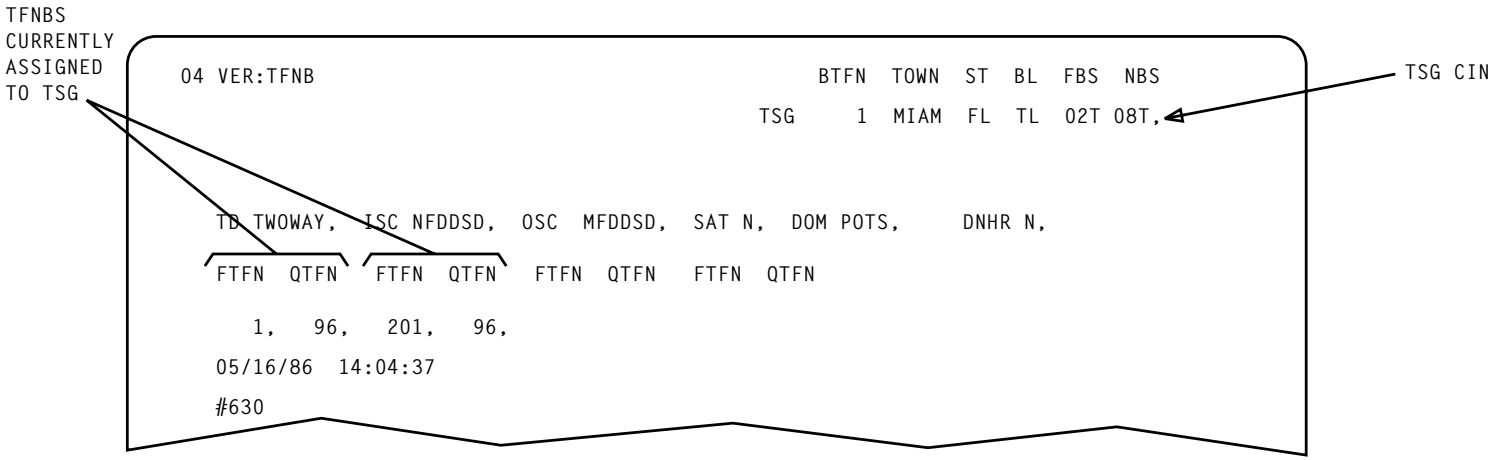

FIG. 2 — Sample CRT Display of Output Verify Message for TFNBs Assigned to TSG

VERIFY CURRENT TRANSLATIONS DATA TO DELETE TRAFFIC NUMBER BLOCK (TFNB) FROM EXISTING TSG

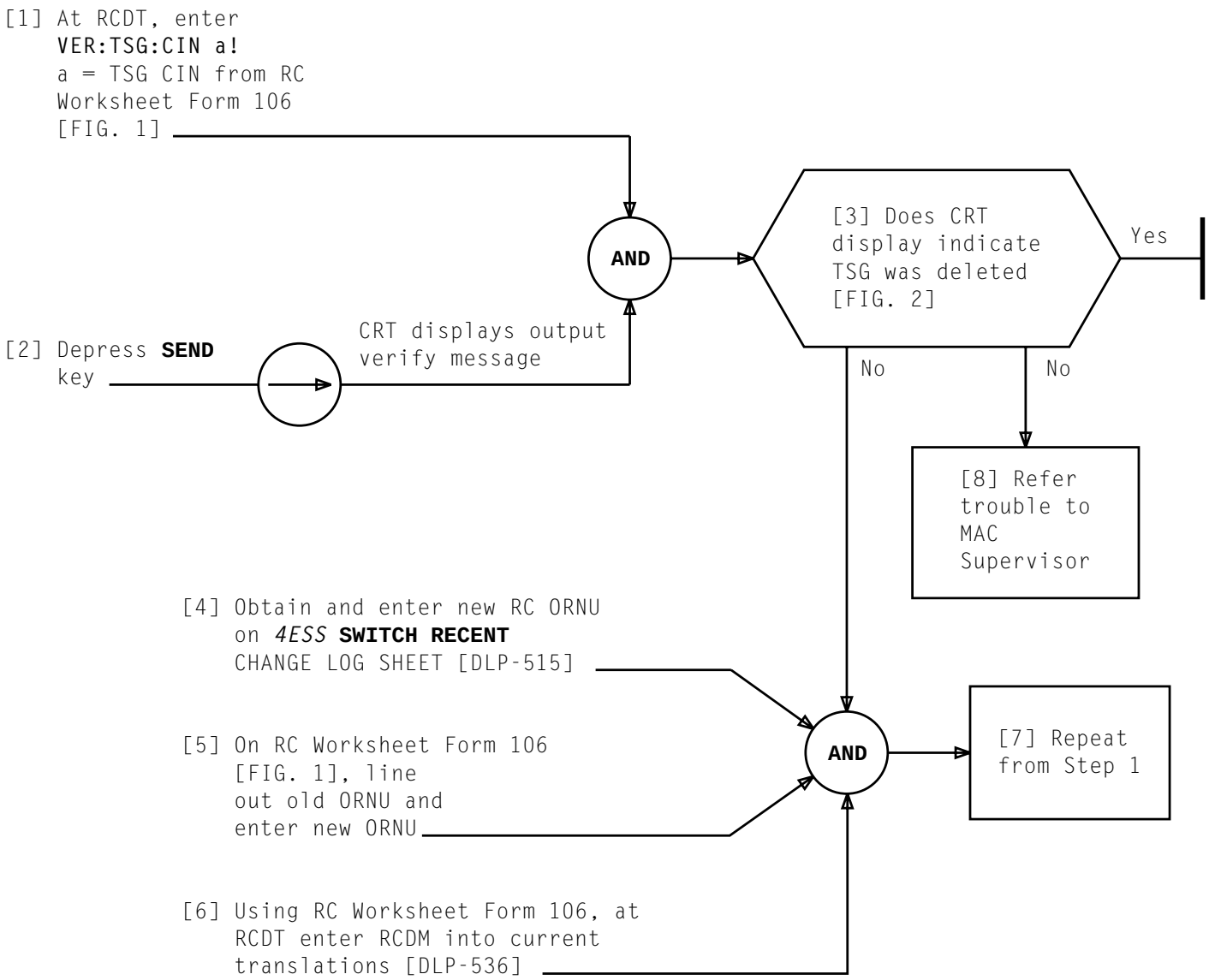

VERIFY CURRENT TRANSLATIONS DATA TO DELETE TSG

Issue 1	JAN 1995
234-152-209	DLP
PAGE 1 of 2	511

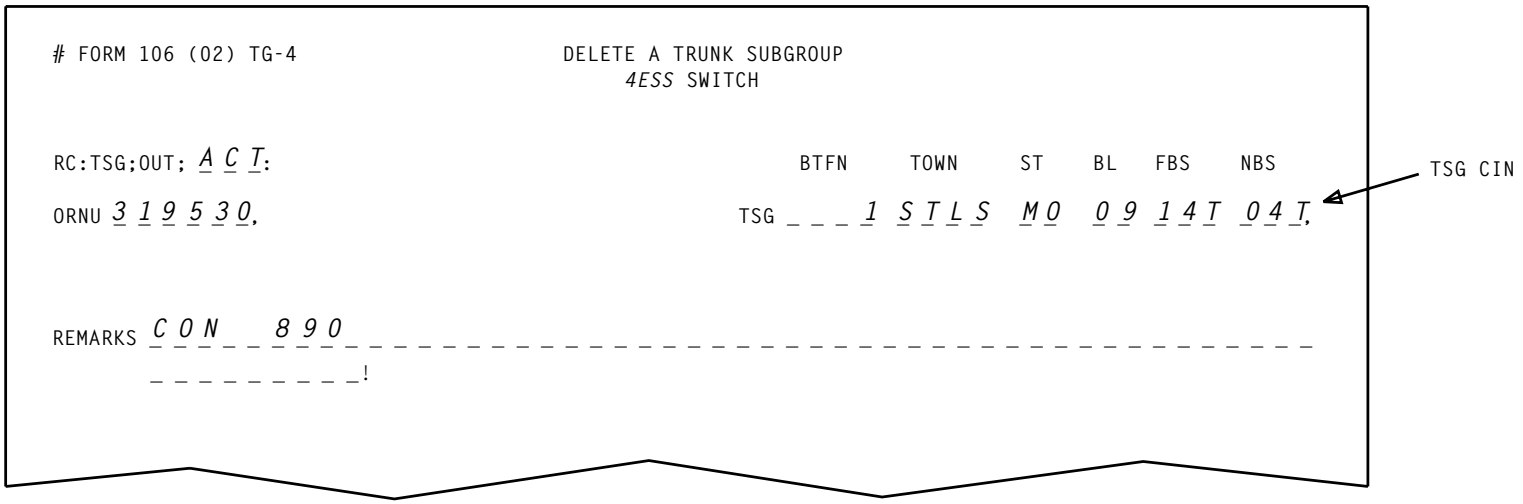

FIG. 1 — Sample of Completed RC Worksheet Form 106

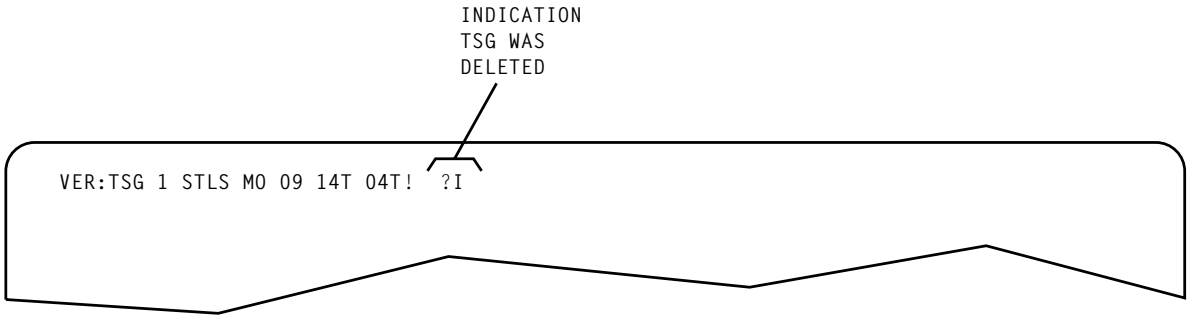

FIG. 2 — Sample CRT Display of Output Verify Message

VERIFY CURRENT TRANSLATIONS DATA TO DELETE TSG

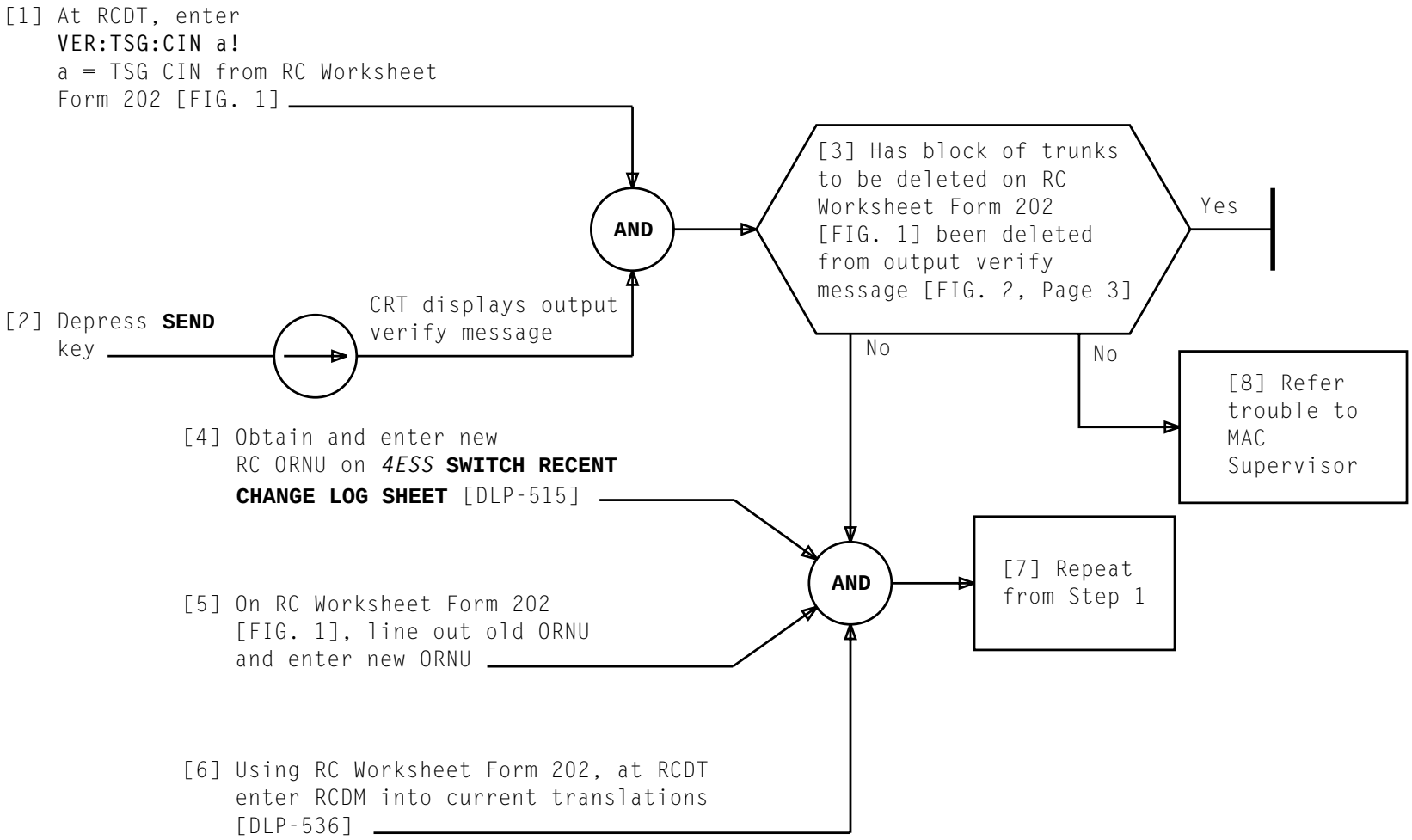

VERIFY CURRENT TRANSLATIONS DATA TO DELETE MESSAGE TRUNKS

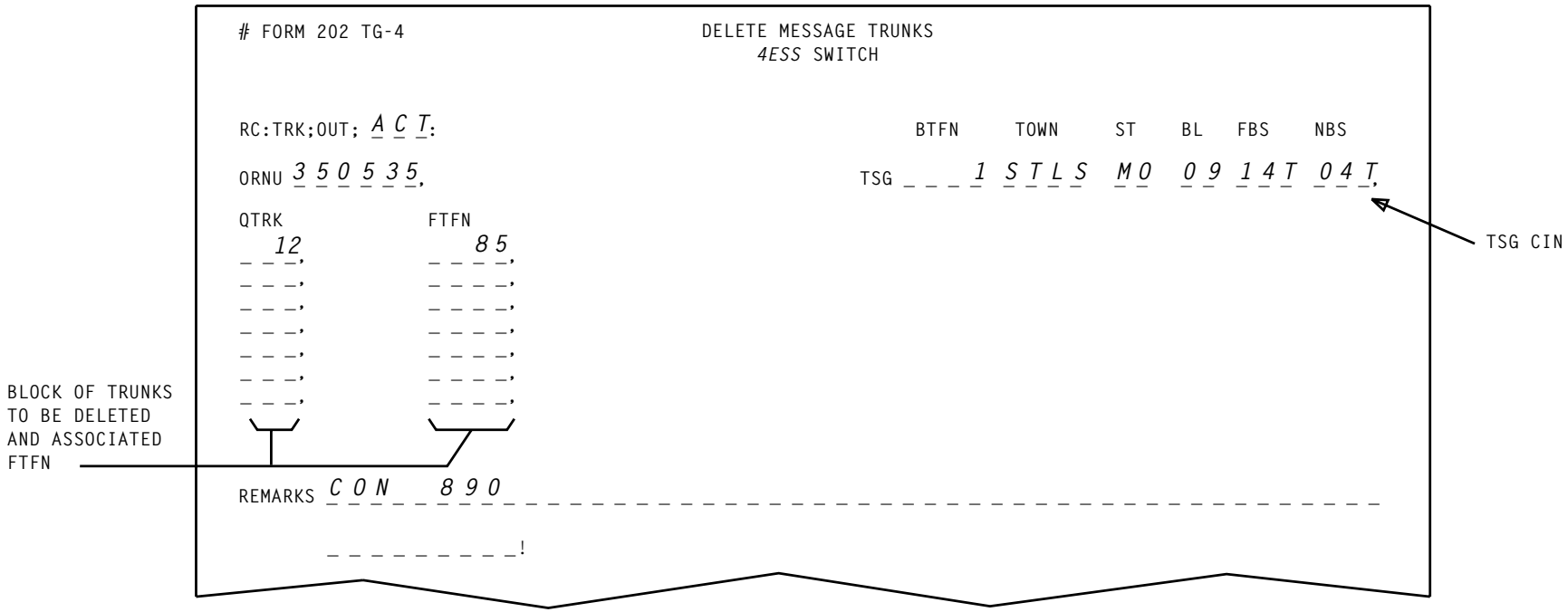

FIG. 1 — Sample of Completed RC Worksheet Form 202

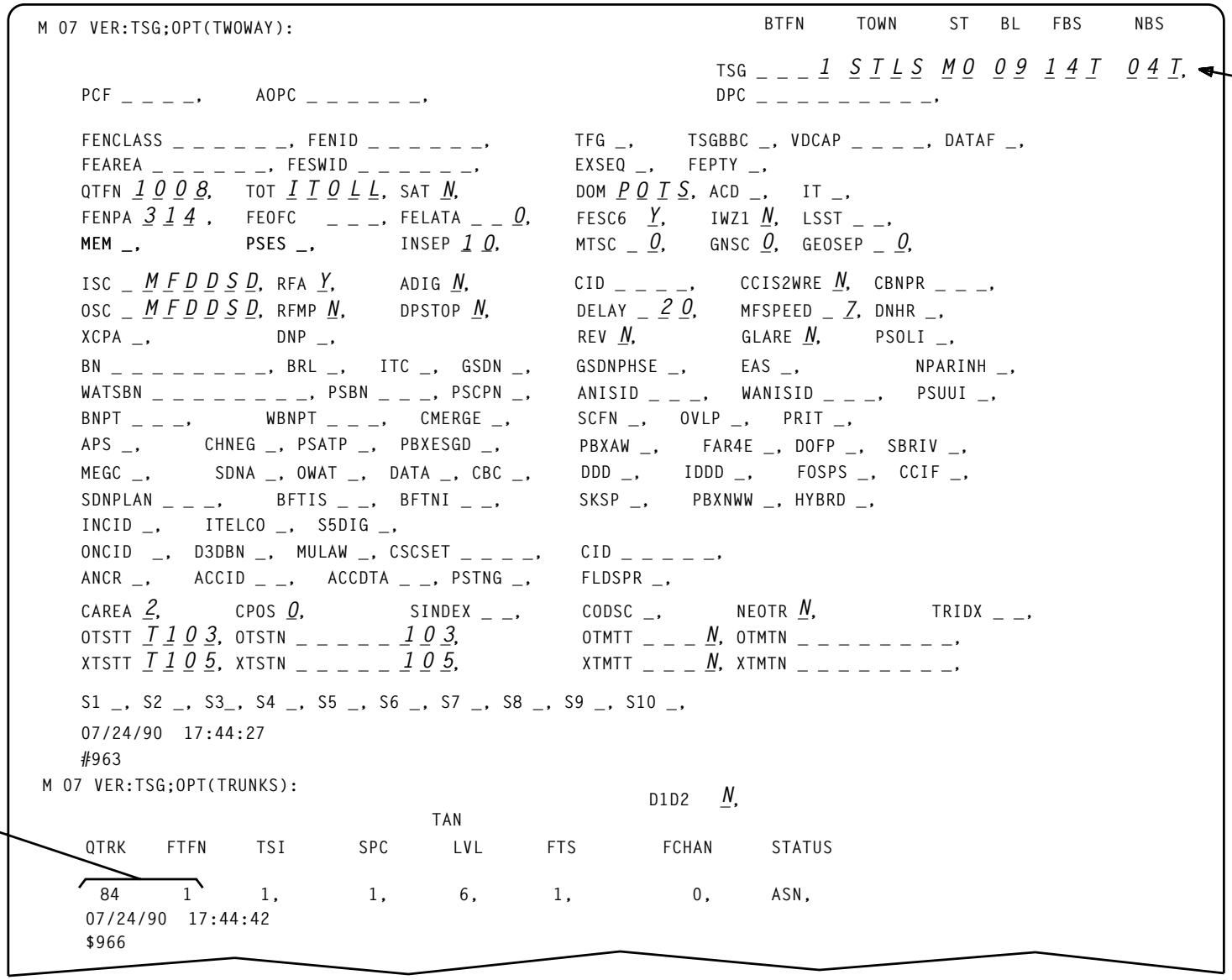

FIG. 2 — Sample CRT Display of TSG Characteristics and Associated Trunks

[1] At RCDT, enter **VER:TSG:CIN** a!
a = TSG CIN

[2] Depress **SEND** key

CRT displays
TSG characteristics

AND

[3] On display of TSG characteristics
[FIG. 1], identify trunk status

DETERMINE TRUNK STATUS

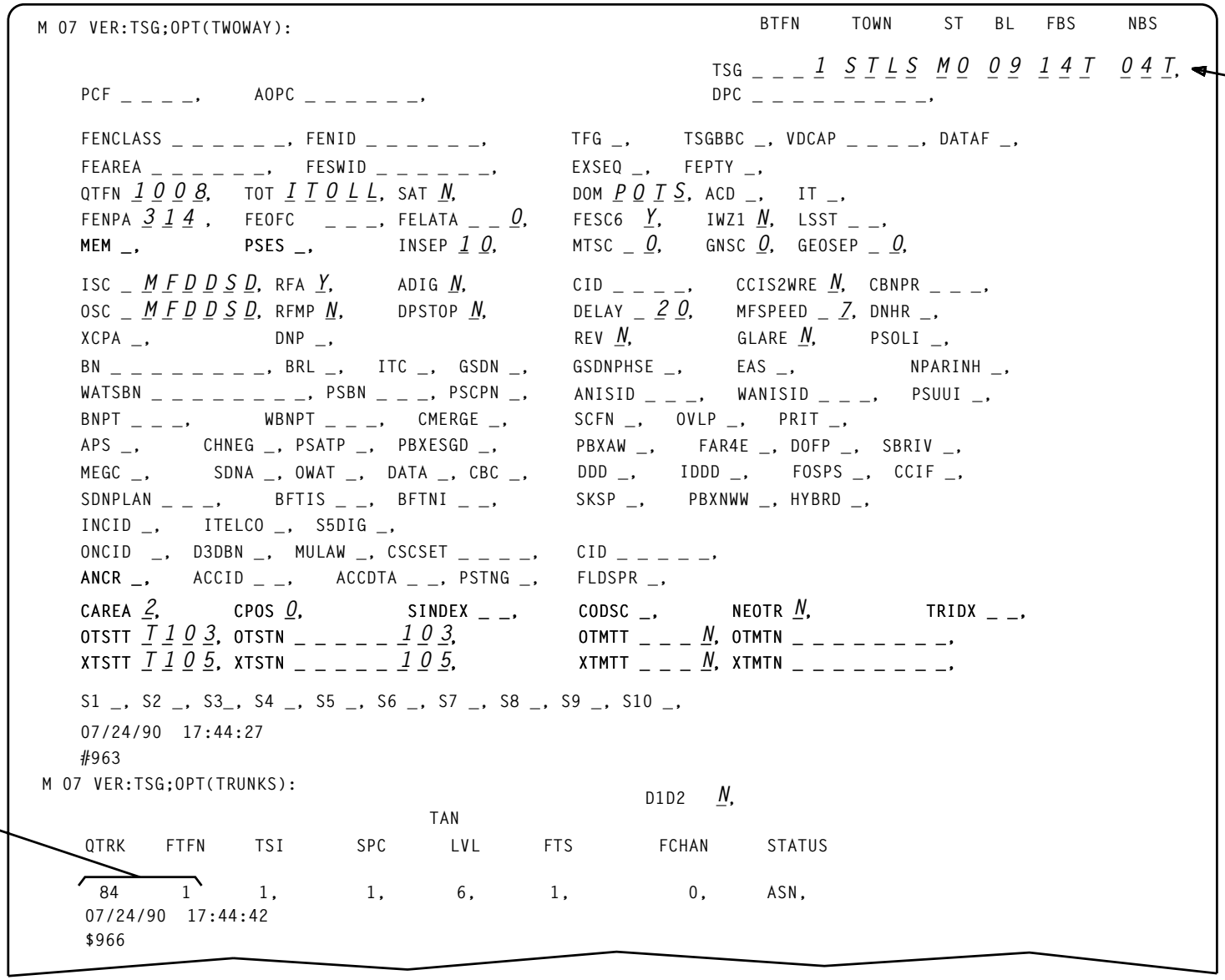

FIG. 2 — Sample CRT Display of TSG Characteristics and Associated Trunks

DETERMINE TRUNK STATUS

DELETE TSG CONTAINING MISMATCHED DATA

On RC Worksheet Form 100 containing TSG data to be deleted [FIG. 1, Page 2]:

[1] Identify Julian Date

[2] Identify TSG CIN

[3] Identify applicable CON number

[4] Obtain ***4ESS*** **SWITCH RECENT CHANGE LOG SHEET** for identified Julian Date

AND

On ***4ESS*** **SWITCH RECENT CHANGE LOG SHEET:**

[5] Under column heading **SEQUENCE NUMBER**, enter next available sequence number on log sheet [FIG. 2, Page 3]

[6] Under column heading **RCDM WORKSHEET**, enter *106*

[7] Under column heading **DESCRIPTION**, enter CIN of TSG followed by (*DELETES SEQUENCE NUMBER* x)
x = Sequence Number to be deleted [FIG. 2]

[8] At RCDT, enter **OP:RCFORM 106!**

[9] Depress **SEND** key → CRT displays Form 106

On displayed Form 106 [FIG. 3, Page 4]:

[10] Following **RC:TSG;OUT;**, enter *ACT*

[11] See NOTE 1. Following **ORNU,** enter assigned ORNU

[12] Following **TSG,** enter CIN of TSG to be deleted

[13] Following **REMARKS,** enter *CON* followed by applicable CON number

AND

Page 5

NOTE 1
ORNU is equal to Julian Date and Sequence Number combined

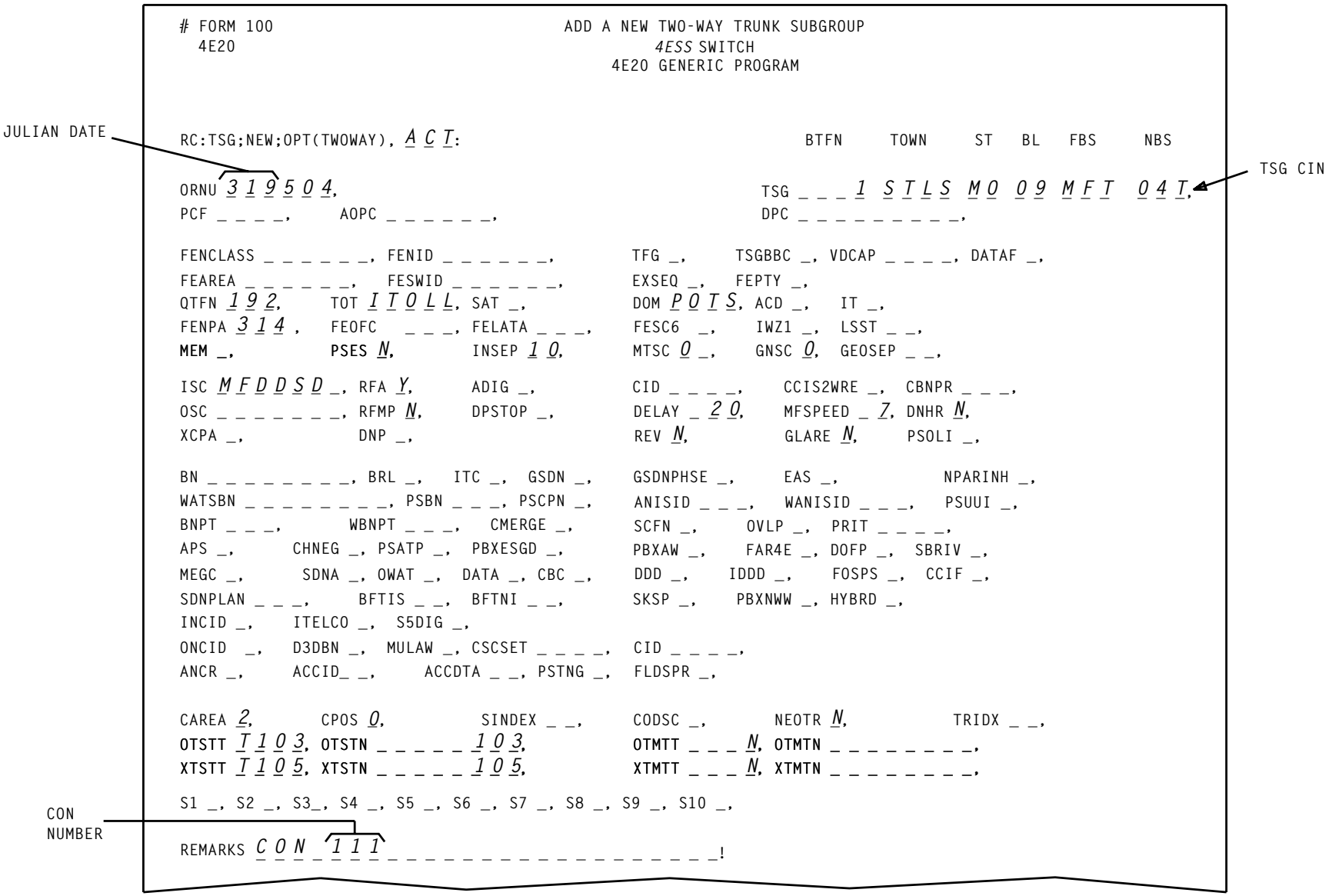

FIG. 1 — Sample of Partially Completed RC Worksheet Form 100 — 4E20 Generic Program

DELETE TSG CONTAINING MISMATCHED DATA

4ESS SWITCH RECENT CHANGE LOG SHEET

SEQUENCE NUMBER 500-899	RCDM WORK SHEET	DESCRIPTION OF RECENT CHANGE ORDER	RCDM			REMARKS	VERIFY	
			BUF	TST	ACT		MAC	MOC
500	*101*	*3000STLSM00914T04T*						
501	*200*	*3000STLSM00914T04T*						
502	*102*	*1000RCDLGATL41T57T*						
503	*200*	*1000RCDLGATL41T57T*						
504	*100*	*1 STLS*						
505	*106*	*1 STLS (DELETES SEQUENCE NUMBER 504)*						

RC ORNU INCORRECTLY ENTERED

NEXT AVAILABLE SEQUENCE NUMBER

JULIAN DATE *3* *1* *9*

ORNU is equal to Julian Date plus Sequence Number (319 505)

Sequence Number

Julian Date

FIG. 2 – Sample of *4ESS* SWITCH RECENT CHANGE LOG SHEET

DELETE TSG CONTAINING MISMATCHED DATA

```
RC:TSG;OUT; A C T:                              BTFN    TOWN    ST   BL   FBS   NBS
ORNU 3 1 9 5 0 5 ,                      TSG        1    S T L S  M O  0 9  M F T  0 4 T ,




REMARKS C O N _ 8 7 6 _ _ _ _ _ _ _ _ _ _ _ _ _ _ _ _ _
        _ _ _ _ _ _ _ _ _ _ _ _ !
```

FIG. 3 — Sample CRT Display of Form 106

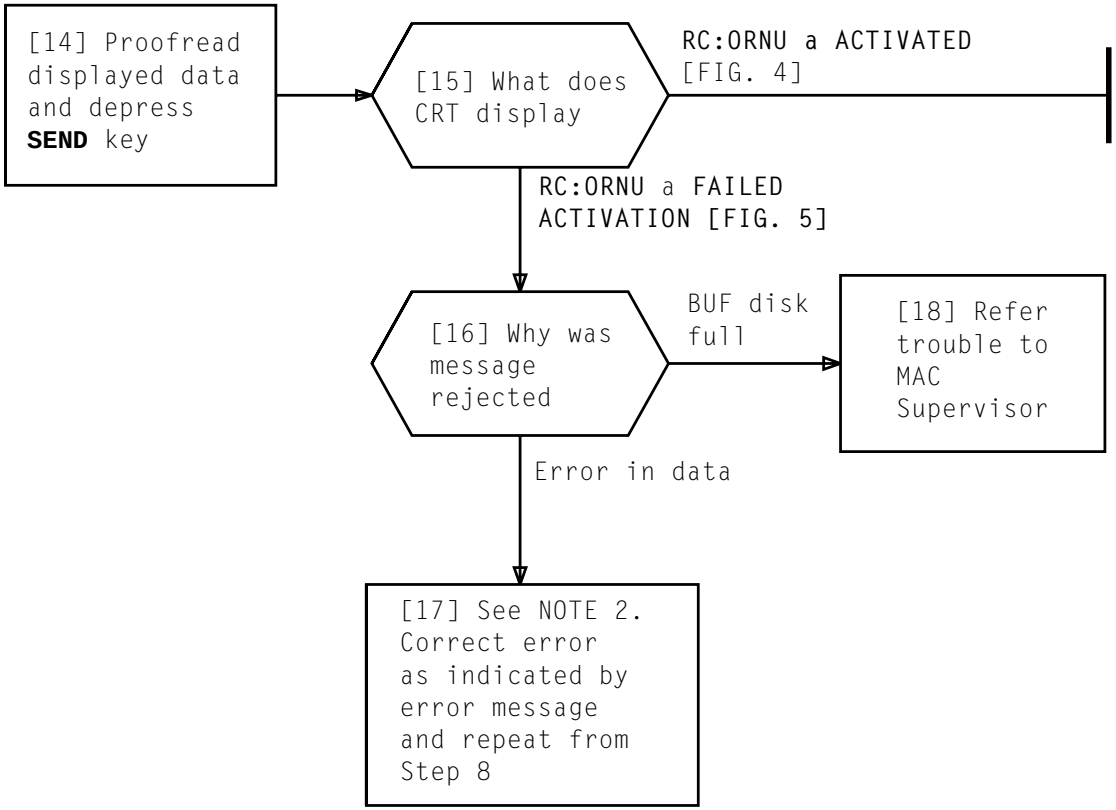


```
M 34 RC:ORNU 319505 ACTIVATED
     01/12/86  16:50:04
     #896
```

FIG. 4 — Sample CRT Display of RCDM Accepted for ACT State

```
M 31 RC:ORNU a FAILED ACTIVATION:
     ERROR IN KEYWORD OF MESSAGE ORNU 319513
                                 D102 N,
```

FIG. 5 — Sample CRT Display of RCDM Rejected for ACT State

NOTE 2

If message is rejected because of error, CRT displays portion of input form ending with keyword that contained error

DELETE TSG CONTAINING MISMATCHED DATA

On RC Worksheet Form 100 containing
data to be entered [FIG. 1, Page 2]:

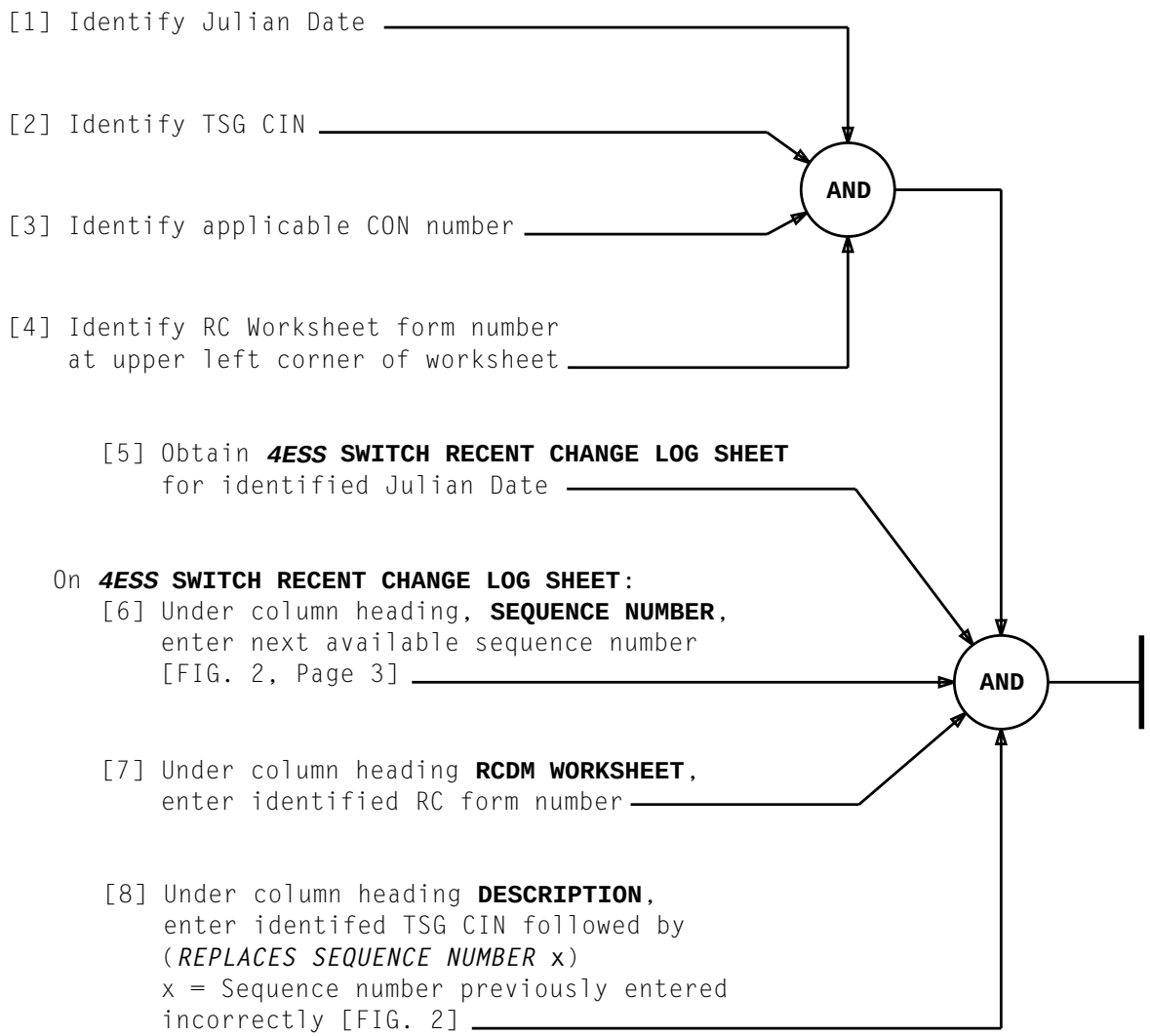

OBTAIN AND ENTER NEW RC ORNU ON *4ESS* SWITCH RECENT CHANGE LOG SHEET

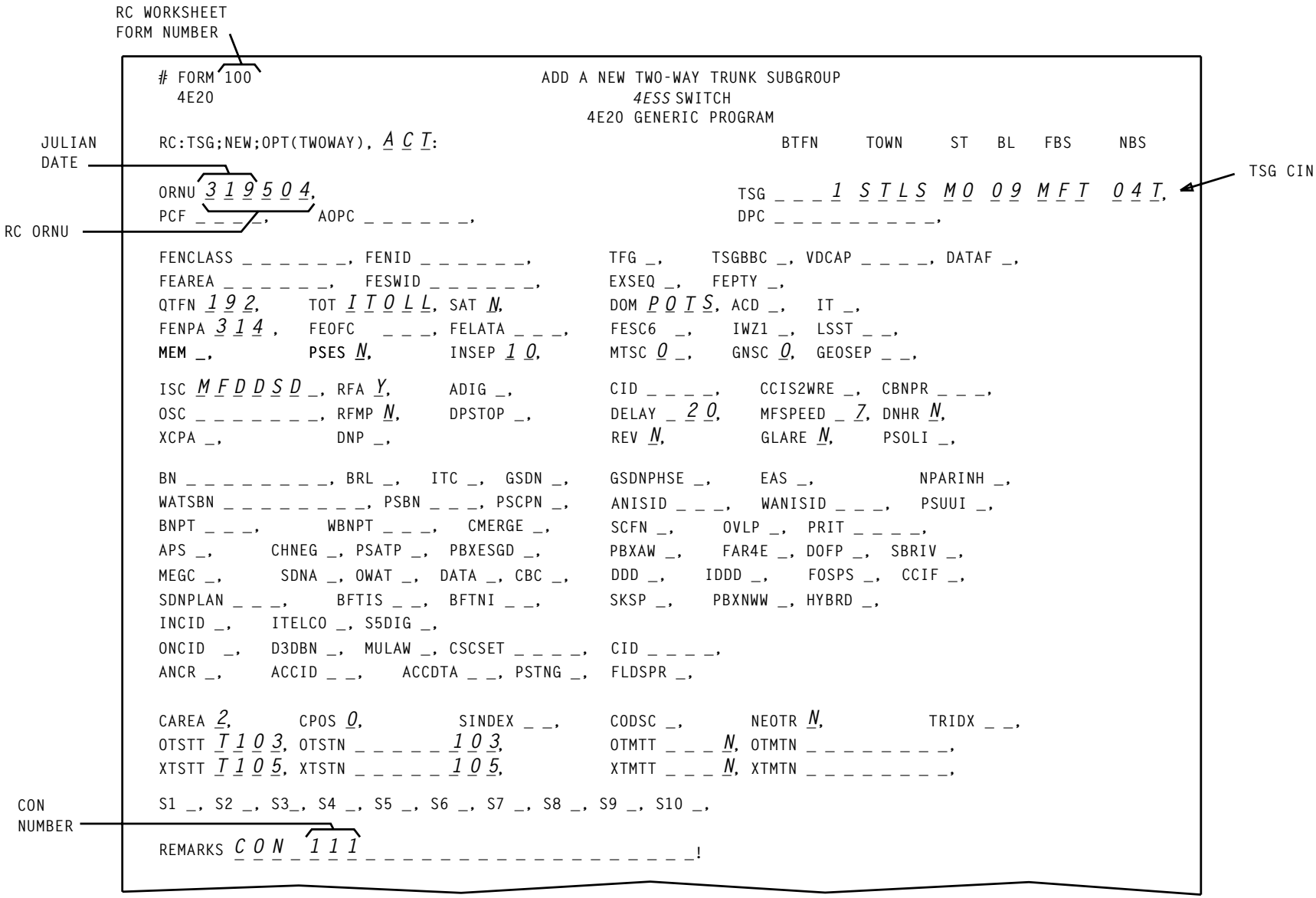

FIG. 1 — Sample of Partially Completed RC Worksheet Form 100 — 4E20 Generic Program

OBTAIN AND ENTER NEW RC ORNU ON *4ESS* SWITCH RECENT CHANGE LOG SHEET

4ESS SWITCH RECENT CHANGE LOG SHEET

SEQUENCE NUMBER 500-899	RCDM WORK-SHEET	DESCRIPTION OF RECENT CHANGE ORDER	RCDM			REMARKS	VERIFY	
			BUF	TST	ACT		MAC	MOC
500	*101*	*3000STLSM00914T04T*						
501	*200*	*3000STLSM00914T04T*						
502	*102*	*1000RCDLGATL41T57T*						
503	*200*	*1000RCDLGATL41T57T*						
504	*100*	*1 STLS*						
505	*106*	*1 STLS (DELETES SEQUENCE NUMBER 504)*						
506	*100*	*1 STLS (REPLACES SEQUENCE NUMBER 504)*						

RC ORNU INCORRECTLY ENTERED

NEXT AVAILABLE SEQUENCE NUMBER

JULIAN DATE *3* *1* *9*

ORNU is equal to Julian Date plus Sequence Number (319 506)

Sequence Number

Julian Date

FIG. 2 – Sample of *4ESS* SWITCH RECENT CHANGE LOG SHEET

OBTAIN AND ENTER NEW RC ORNU ON *4ESS* SWITCH RECENT CHANGE LOG SHEET

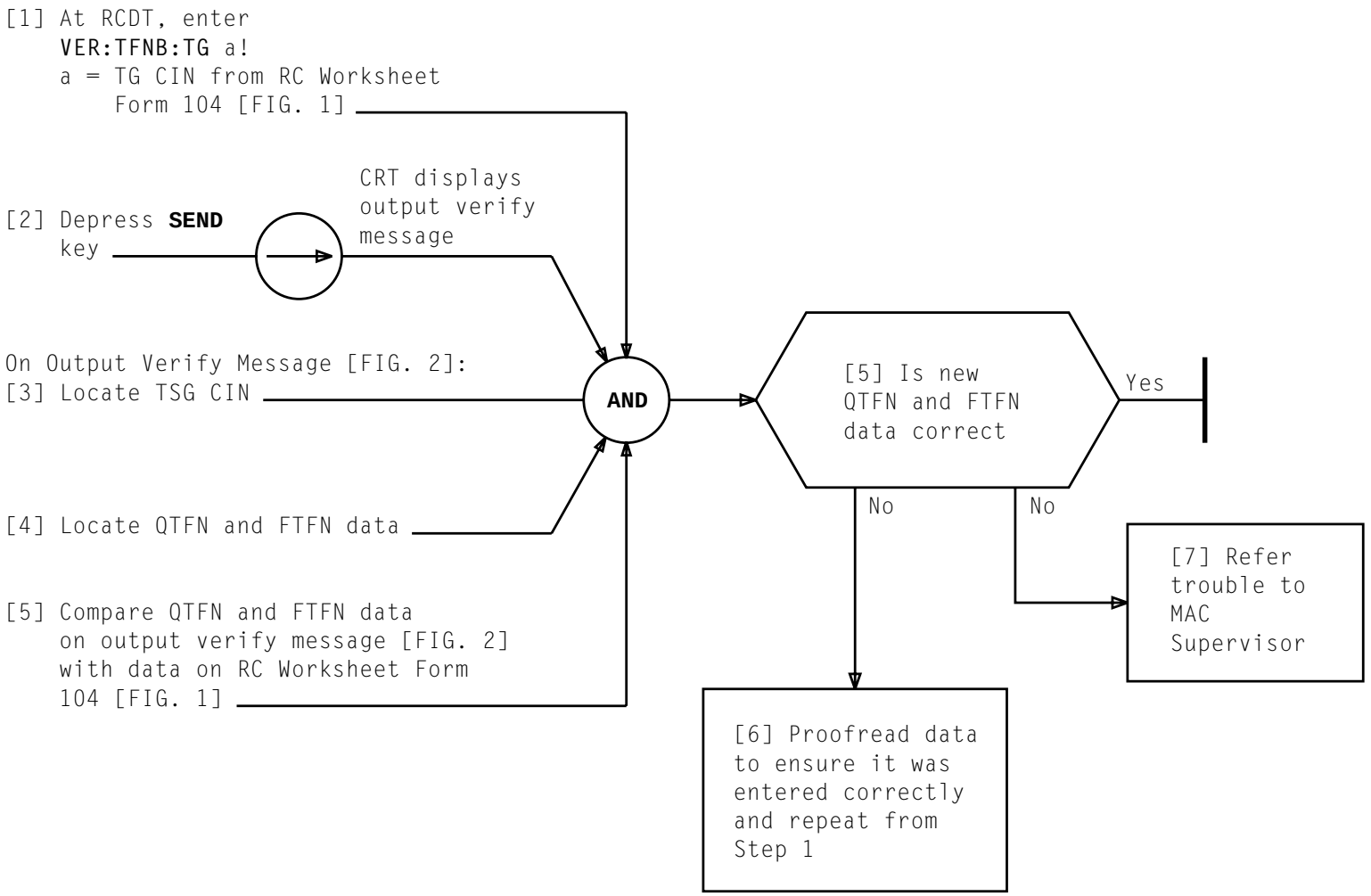

VERIFY CURRENT TRANSLATIONS DATA TO ADD TRAFFIC NUMBER BLOCK (TFNB) TO TSG

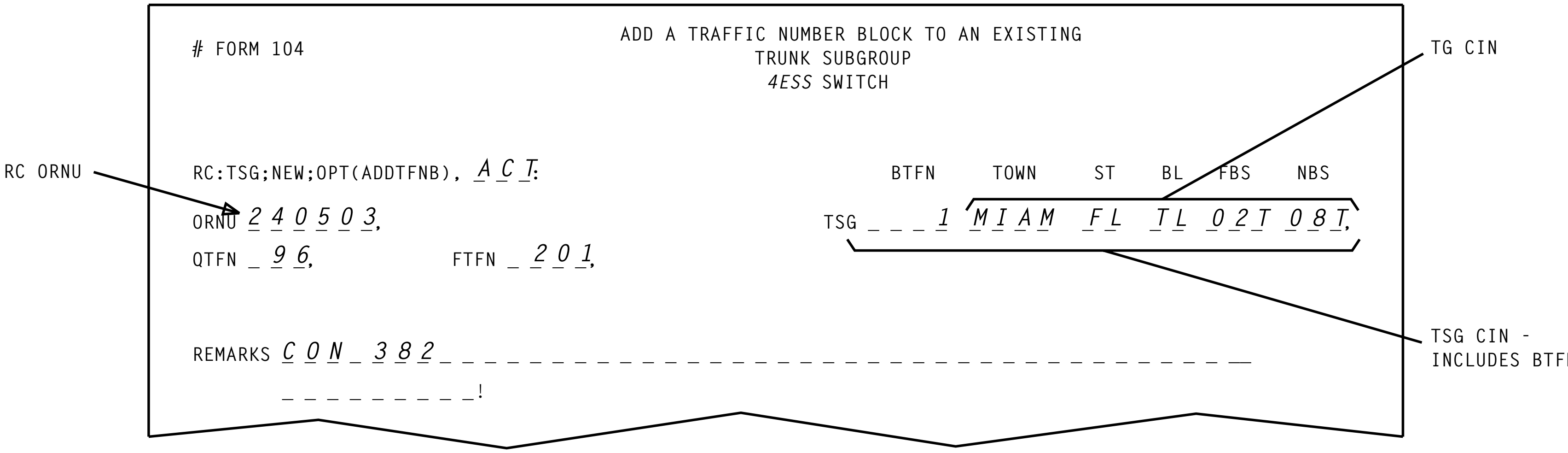

FIG. 1 — Sample of Completed RC Worksheet Form 104

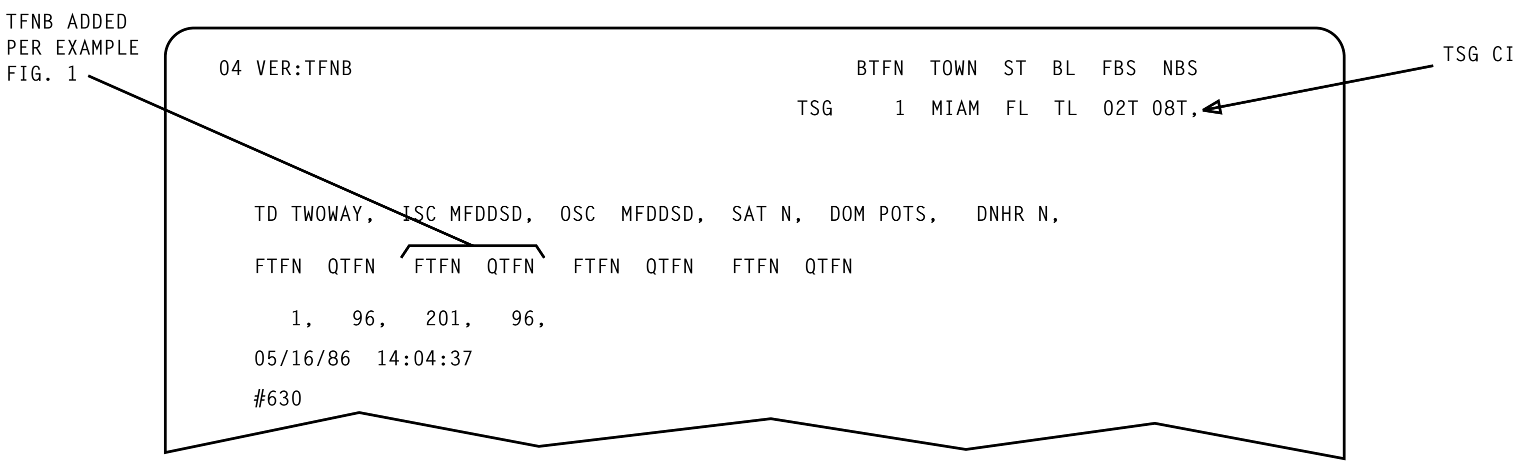

FIG. 2 — Sample CRT Display of Output Verify Message for TFNBs Assigned to TSG

VERIFY CURRENT TRANSLATIONS DATA TO ADD TRAFFIC NUMBER BLOCK (TFNB) TO TSG

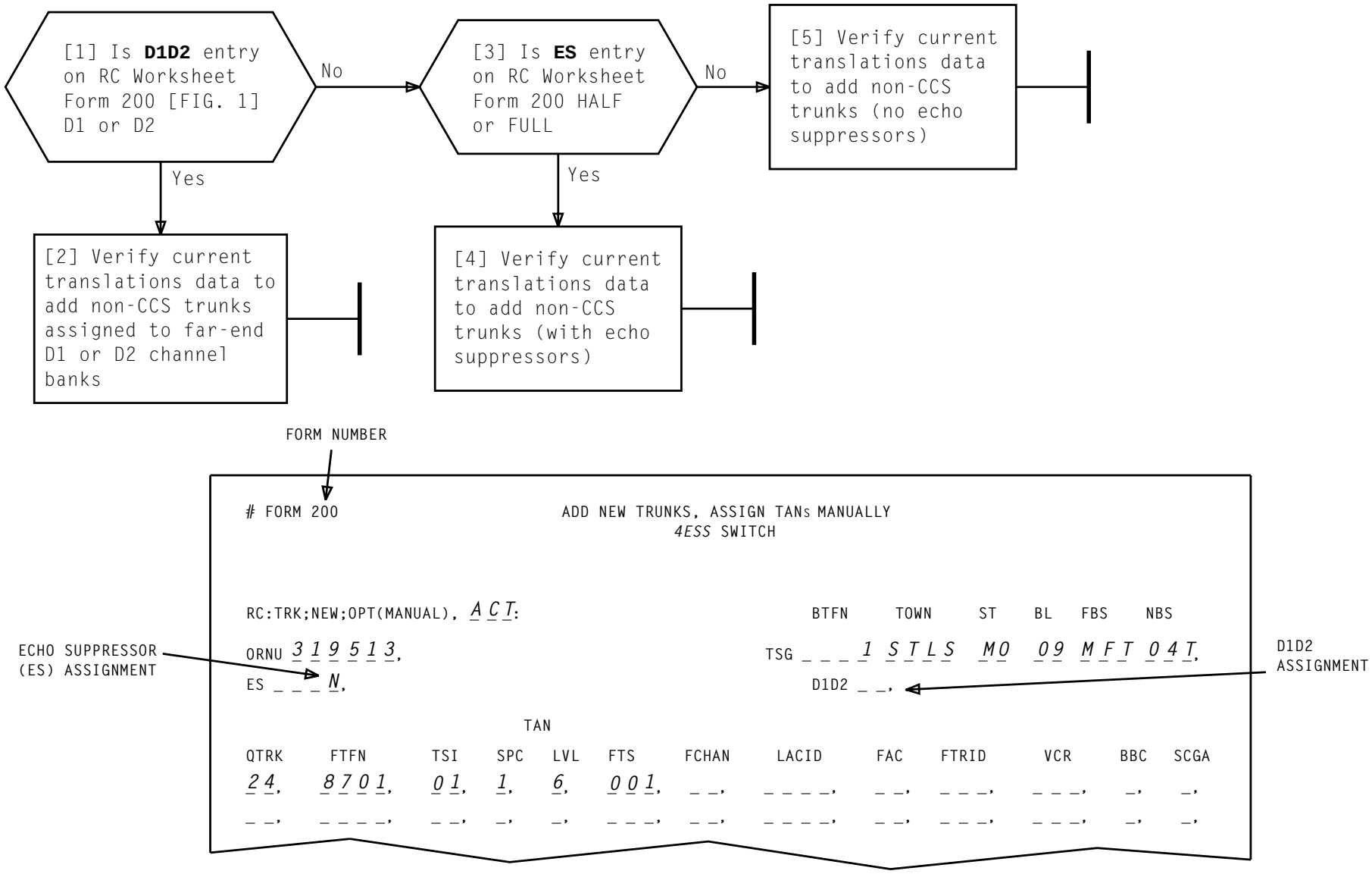

FIG. 1 — Sample of Completed RC Worksheet Form 200

DETERMINE VERIFICATION TO BE PERFORMED

[1] At RCDT, enter
VER:RDBLIST;ALL:TSG *a!*
a = TSG CIN

AND

[2] Depress **SEND** key

CRT displays
list of RDBIs [FIG. 1]

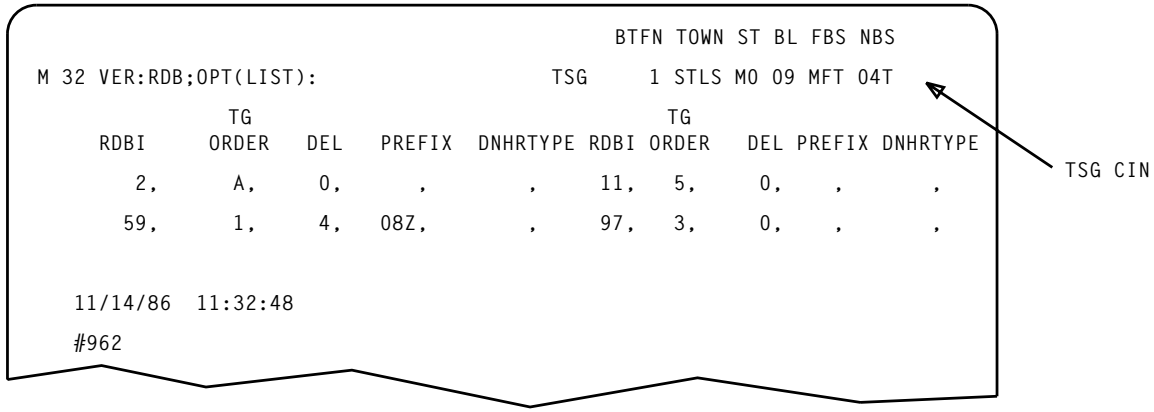

FIG. 1 — Sample CRT Display of RDBIs Containing TSG

OBTAIN DISPLAY OF RDB INDEXES (RDBIs) FOR RDBs CONTAINING TSG

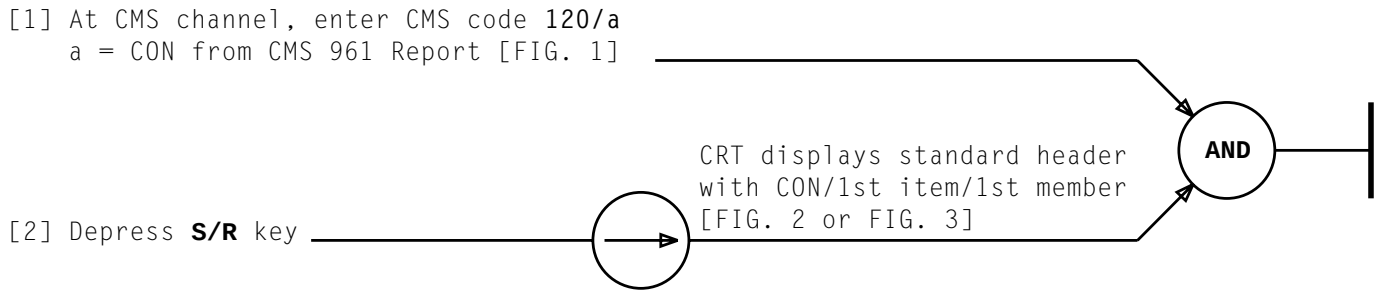


```
DATE - 08/30          TIME - 16:10                                          PAGE 01

   REPORT 961      CIRCUIT ORDER REPORT

   EARLIEST ITEM                                                  # OF       STATUS
     DUE DATE        CON ORDER NUMBER              CIN            ITEMS     MAC/TEC/TOC

   TRUNK GROUP       STLSM00914T04T
     12/15/86        301  P47CCF              1STLSM00914T04T      24       RC/PND/PND

   TRUNK GROUP       CHCGILCL04T57T
     01/12/87        473  126-9003A           1CHCGILCL04T04T      12       PND/PND/PND

   TRUNK GROUP       STLSM00914T04T
     01/21/87        331  P47CCH            301STLSM00914T04T      12       PND/PND/PND
```

CON

FIG. 1 — Sample Printout of CMS 961 Report

NONMODULAR

```
MESSAGES:
CON/ITEM/MEMBER: 301/01 ..)    1STLSM00914T04T/C    STATUS: RC/PND/PND
```

FIG. 2 — Sample CRT Header Display — First Item Activated (Nonmodular)

FIRST MEMBER OF ACTIVATED ITEM

INDICATION OF MODULAR GROUP

```
MESSAGES:
CON/ITEM/MEMBER: 381/01 /01)M  25MIAMFLTL02TT57T/C  STATUS: RC/PND/PND
```

FIG. 3 — Sample CRT Header Display — First Item and First Member Activated (Modular)

ACTIVATE CON IN CMS

[1] At CMS channel, enter
CMS code **250/a**
a = Number of items [##**OF ITEMS**]
for activated CON from CMS 961
Report [FIG. 1]

[2] Depress **S/R** key

CRT displays CMS Form 250
page containing last item
number [FIG. 2 or 3, Page 2]

AND

[3] See NOTE 1. Using first traffic number
from CIN on CMS 961 Report [FIG. 1]
and traffic number from last CIN on
CMS 250 display [FIG. 2 or 3],
determine range of traffic
numbers [NOTE 1]

[4] Record range
of traffic numbers
[FIG. 2 or 3] and
retain for later use

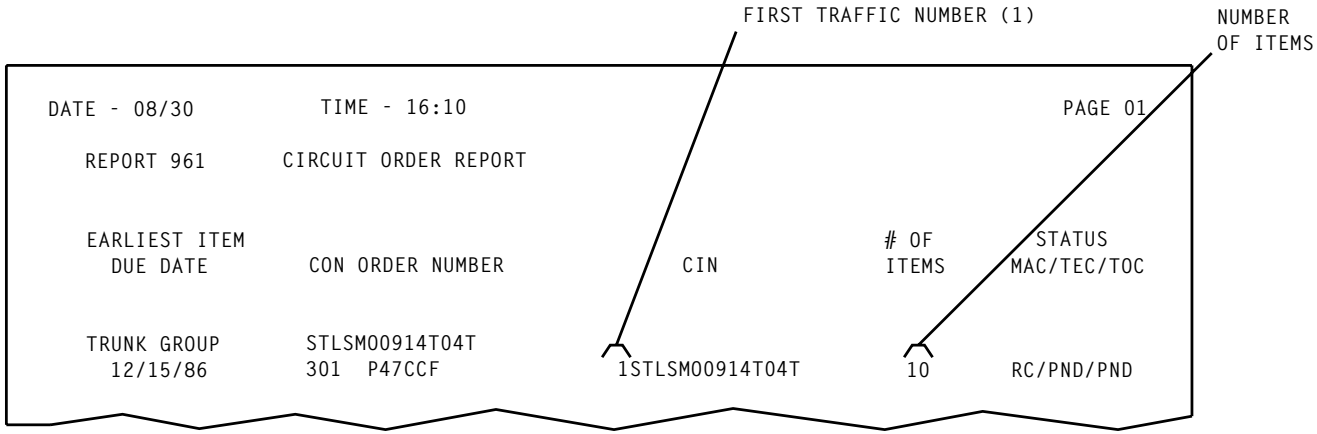

FIG. 1 – Sample Printout of CMS 961 Report (Partial)

NOTE 1
When circuit order item numbers are identified as modular entries (message header contains an M), add 11 to traffic number on last CIN to obtain last traffic number

IDENTIFY RANGE OF TRAFFIC NUMBERS ASSOCIATED WITH ACTIVATED CON

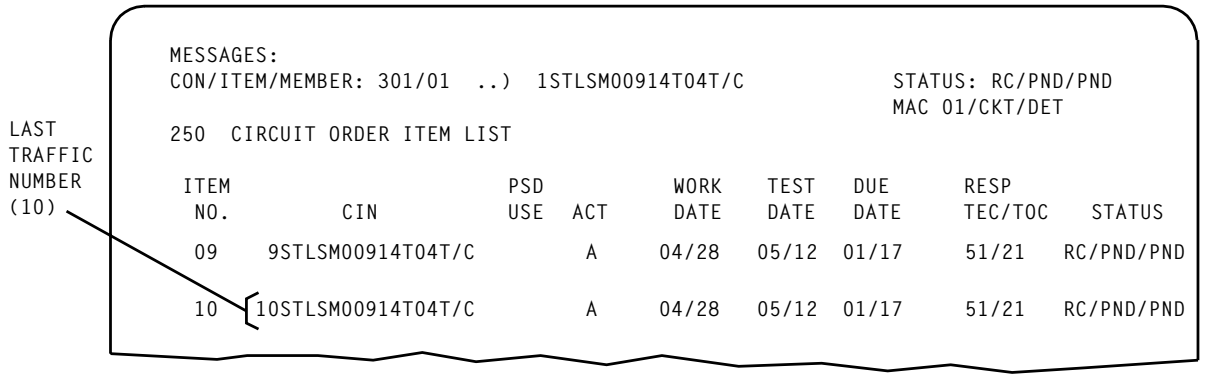

FIG. 2 — Sample CMS 250 Display of Page Containing Last Item Number (Nonmodular)

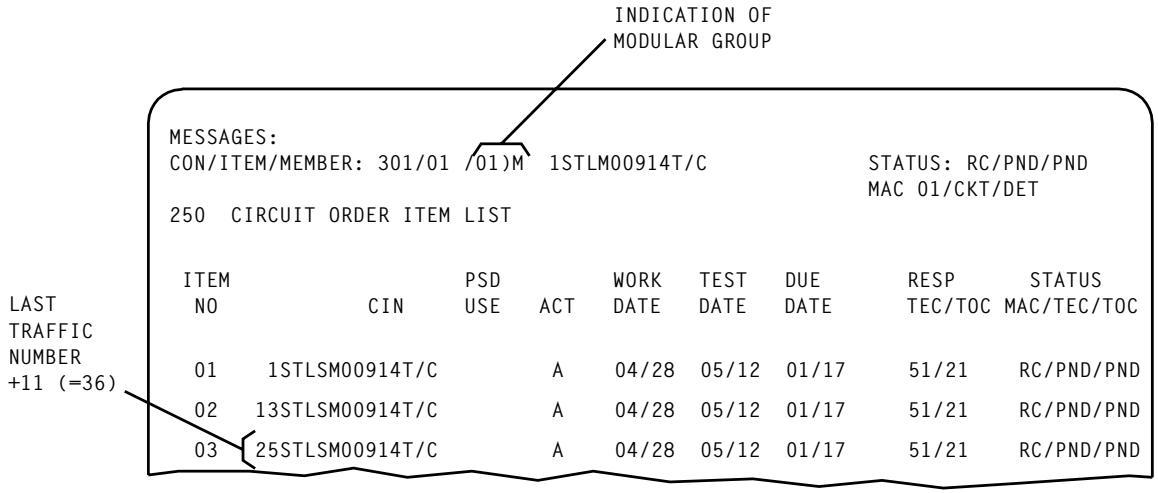

FIG. 3 — Sample CMS 250 Display of Page Containing Last Item Number (Modular)

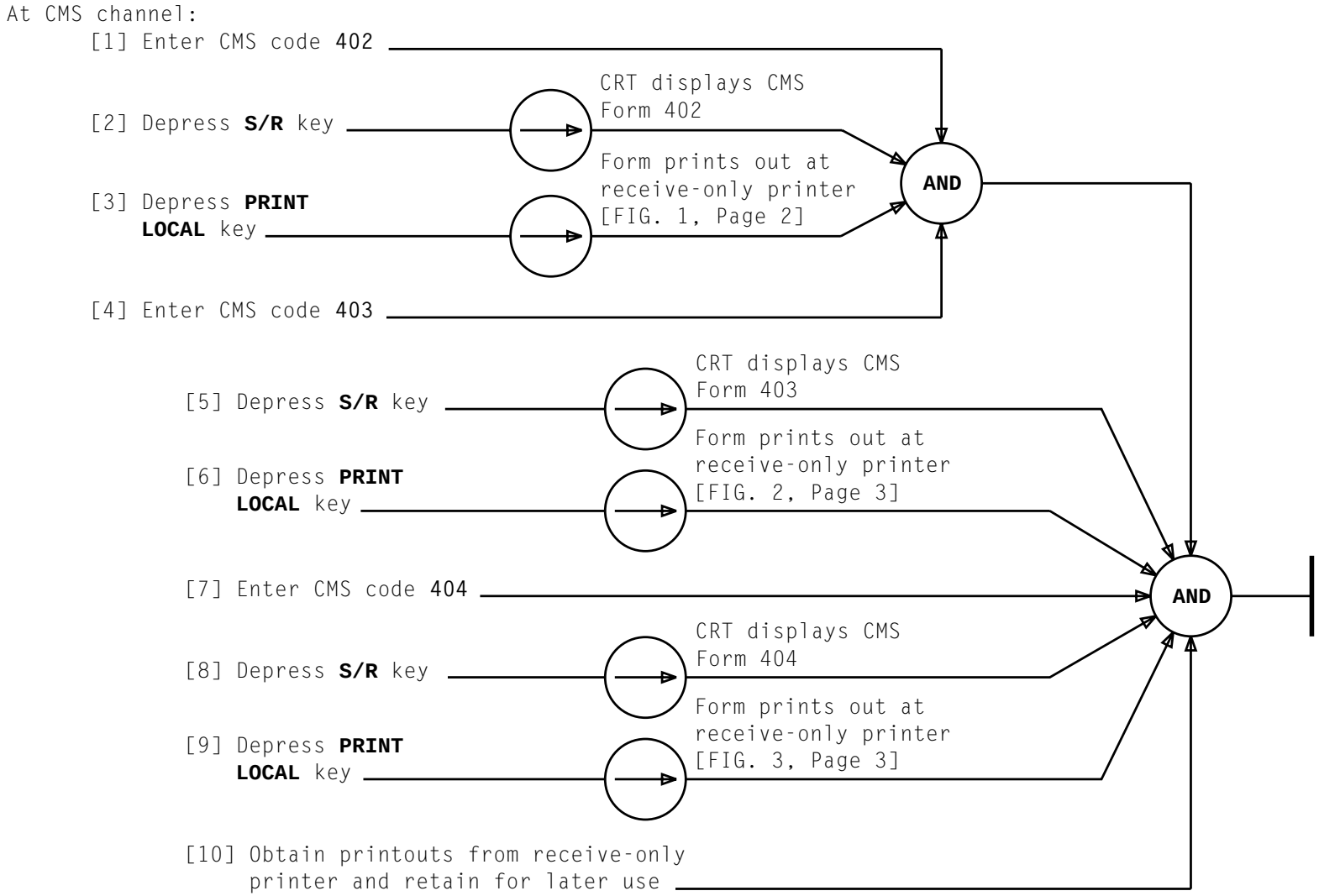

OBTAIN PRINTOUTS OF CMS 402, 403 AND 404 DISPLAYS

Issue 1	JAN 1995
234-152-209	DLP
PAGE 1 of 3	521

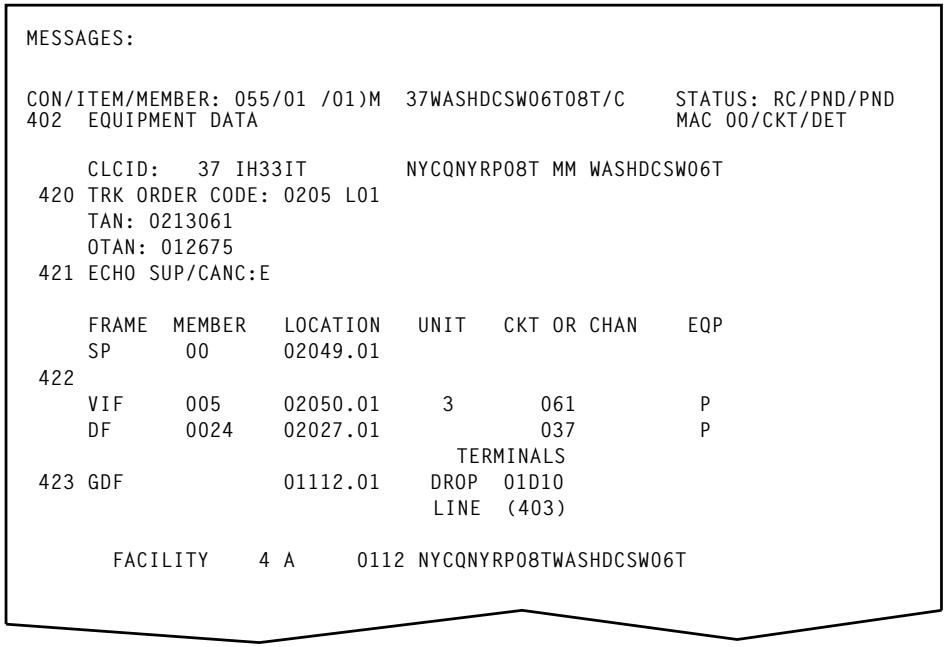

```
MESSAGES:


CON/ITEM/MEMBER: 055/01 /01)M  37WASHDCSW06T08T/C    STATUS: RC/PND/PND
402  EQUIPMENT DATA                                  MAC 00/CKT/DET

     CLCID:   37 IH33IT        NYCQNYRP08T MM WASHDCSW06T
 420 TRK ORDER CODE: 0205 L01
     TAN: 0213061
     OTAN: 012675
 421 ECHO SUP/CANC:E

     FRAME  MEMBER   LOCATION   UNIT   CKT OR CHAN    EQP
     SP      00      02049.01
 422
     VIF     005     02050.01     3       061          P
     DF      0024    02027.01             037          P
                                TERMINALS
 423 GDF             01112.01    DROP  01D10
                                 LINE  (403)

       FACILITY    4 A     0112 NYCQNYRP08TWASHDCSW06T
```

FIG. 1 – Sample Printout of CMS 402 Display

OBTAIN PRINTOUTS OF CMS 402, 403 AND 404 DISPLAYS

```
MESSAGES:
CON/ITEM/MEMBER: 060/01   ..) 3000LWSNMOXA29604T    STATUS: RC/PND/PND
                                                    MAC 05/CKT/DET
403 TEST DATA
    CLCID:   3000 UH24IT        KSCYMO0904T -D LWSNMOXA296
410 ——— EML —— DEV —— 1000 HZ — LTF: 400 HZ —— UTF: 2800 HZ —— ICL
    A:    6.0      .5      6.1        6.4             6.4         3.0
    Z:             .5      5.8        5.8             7.5         3.0
411 ——— NOISE MEAS —— SP MEAS —— ERL MEAS ———————— SWSYS ——— SWA
    A:   23C30     14      27         41              4ES         TP3
    Z:   23C30     12                 16              SXS         TPO
___ CAROT TESTABLE? _____________ CAROT TEST PASSED? _____________
412
413
414
415
416
417
418
419
```

FIG. 2 — Sample Printout of CMS 403 Display

```
MESSAGES:
CON/ITEM/MEMBER: 060/01   ..) 3000LWSNMOA29604T      STATUS: RC/PND/PND
                                                     MAC 05/CKT/DET
404 TRANSLATION DATA
---------------------- CIRCUIT ----------------------------------------
 430 CLCID: 3000DF45CA             KSCYMO0904T     MM  LWSNMOA296
     CIN : 3000LWSNMOA29604T
     ALTERNATE NAME: PHONYNAMEEXAMPLE
     CONTROL: /C                                  CO  RESP- TOC/TEC:22/50
     OWNERSHIP: SW                                MTC RESP- TOC/TEC:22/50
     ORIGINAL CLCID: (ONLY APPLIES TO NAME CHANGE)
 431 TAN: 0213116   CCIS TERMINAL:    /       BAND:        LABEL:


 432 ABBREVIATED ORDER CODE:                   FE CHANNEL BANK:

 --------------------- FACILITY ----------------------------------------
 433 OUTGOING FAX: 103       ONB      1      KSCYMO09FC2   LWSNMOAF51
     TERMINATING FRAME LOC:

 ------------------ CIRCUIT ORDER ----------------------------------------

 434 WORK DATE:   / /     TEST DATE:   / /    DUE DATE: 07/03

 435 CAROT TESTABLE? N                   CAROT TESTS PASSED ?
```

FIG. 3 — Sample Printout of CMS 404 Display

OBTAIN PRINTOUTS OF CMS 402, 403 AND 404 DISPLAYS

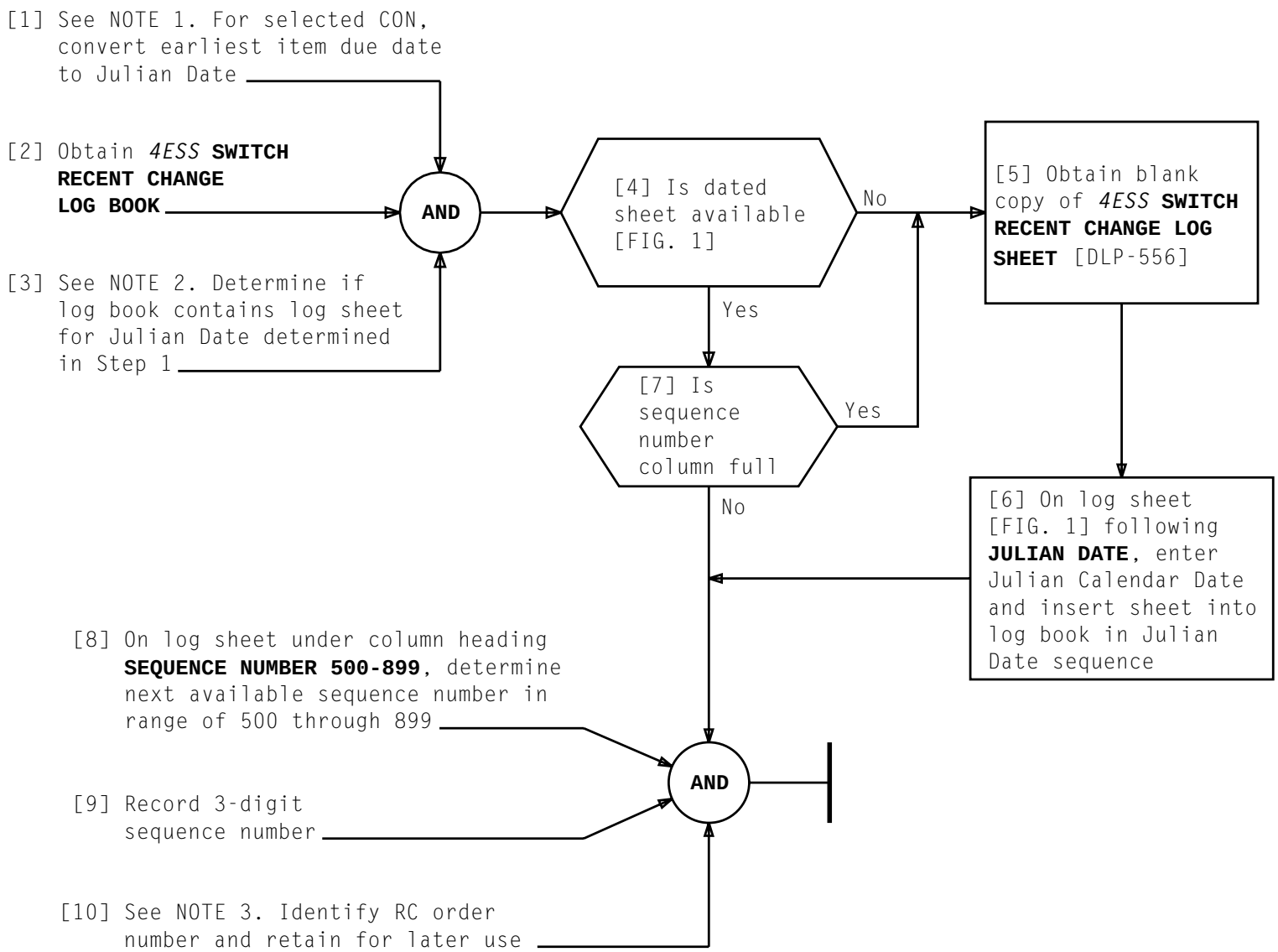

NOTES

1. Julian Calendar Date = cumulative number of days in year to and including today's date. Julian Date can be located on many desk calendars in lower left corner of right-hand page.
2. Sheets are filed sequentially in log by Julian Calendar Date. Date is located at lower left corner of each page.
3. RC order number is made up of Julian Date and Sequence Number combined

Example:

158 502

- 502 — Sequence Number
- 158 — Julian Date

ASSIGN RECENT CHANGE ORDER NUMBER

4ESS SWITCH RECENT CHANGE LOG SHEET

SEQUENCE NUMBER 500-899	RCDM WORK-SHEET	DESCRIPTION OF RECENT CHANGE ORDER	RCDM			REMARKS	VERIFY	
			BUF	TST	ACT		MAC	MOC
500								
501								

ORNU is equal to Julian Date plus Sequence Number (132 502)

Sequence Number

Julian Date

JULIAN DATE *2 2 8*

NEXT AVAILABLE NUMBER IS 502

JULIAN DATE EQUIVALENT TO 8/16/86

FIG. 1 — Sample of Dated *4ESS* SWITCH RECENT CHANGE LOG SHEET (Partial)

ASSIGN RECENT CHANGE ORDER NUMBER

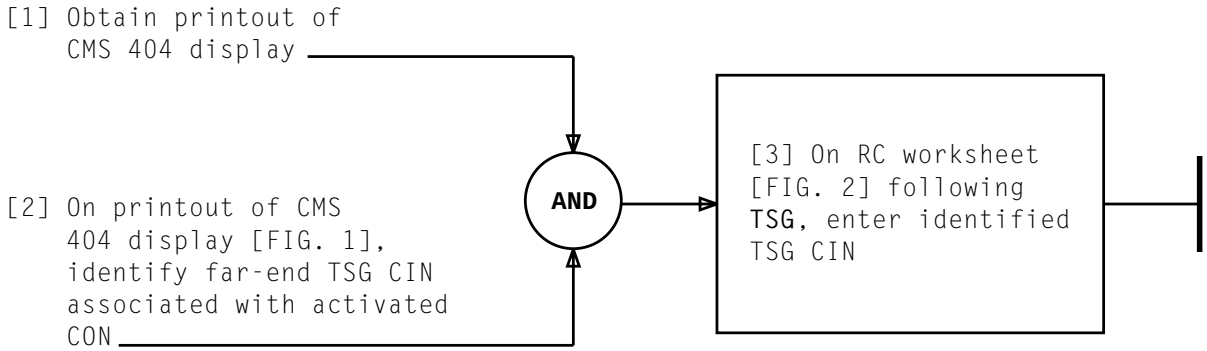

FIG. 1 — Sample Printout of CMS 404 Display (Partial)

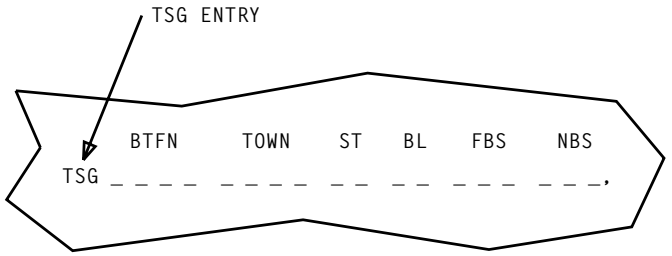

FIG. 2 — Sample of RC Worksheet (Partial)

ENTER TSG CIRCUIT IDENTIFICATION NAME (CIN)

[1] See NOTE 1. On printout of CMS 404 display [FIG. 1] following **CLCID:**, identify traffic use code

[2] Identify TOT code associated with traffic use code [TABLE A]

[3] On RC Worksheet [FIG. 2] following **TOT**, enter identified TOT code

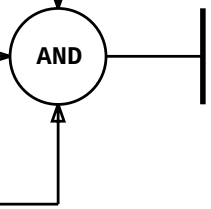

TABLE A

TRAFFIC USE CODES	TOT CODE
CA — ANI	CAMAA
CA — ONI	CAMAO
MT, LA	ITAND
IT	ITOLL
LW, DA, TT, OA	SECIT
TG, TO	TAND
DD, OO, MN, RC, TC, TM, TS, DO, DT	TOLLC
SP	TSPS
AL, AN, CB, CD, CP, CS, CZ, DA, DS, EM, IN, IP, IR, MA, MB, NT, OF, PA, PC, PS, RR, RS, SA, SC, SO, TA, TI, TK, TP, VC, VR, VS, WE	MISC
AP	ACD
MI	PBX

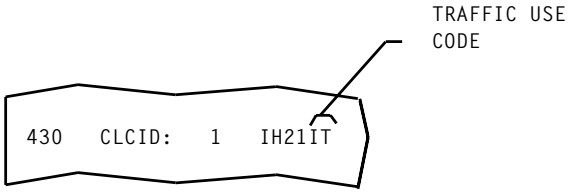

FIG. 1 — Sample Printout of CMS 404 Display (Partial)

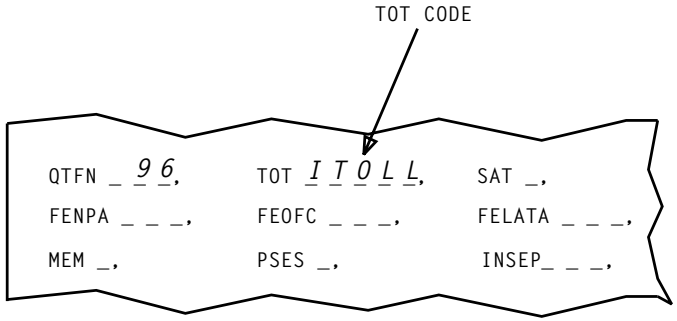

FIG. 2 — Sample of RC Worksheet (Partial)

NOTE 1
If traffic use code is not shown, it can be assumed the code is IT

ENTER TYPE OF TRUNK (TOT) CODE (DOMESTIC)

1. Obtain blank copy of RC Worksheet Form 104

On RC Worksheet Form 104 [FIG. 1]:
2. Following **RC:TSG;CHG;OPT(ADDTFNB)**, enter *ACT*

3. Following **ORNU**, enter assigned ORNU

4. Following **TSG**, enter TSG CIN

5. Following **QTFN**, enter *96*

6. Following **FTFN**, enter lowest TFN in new block of TFNs to be assigned to TFNB

7. Following **REMARKS**, enter *CON* followed by applicable CON number

End of procedure

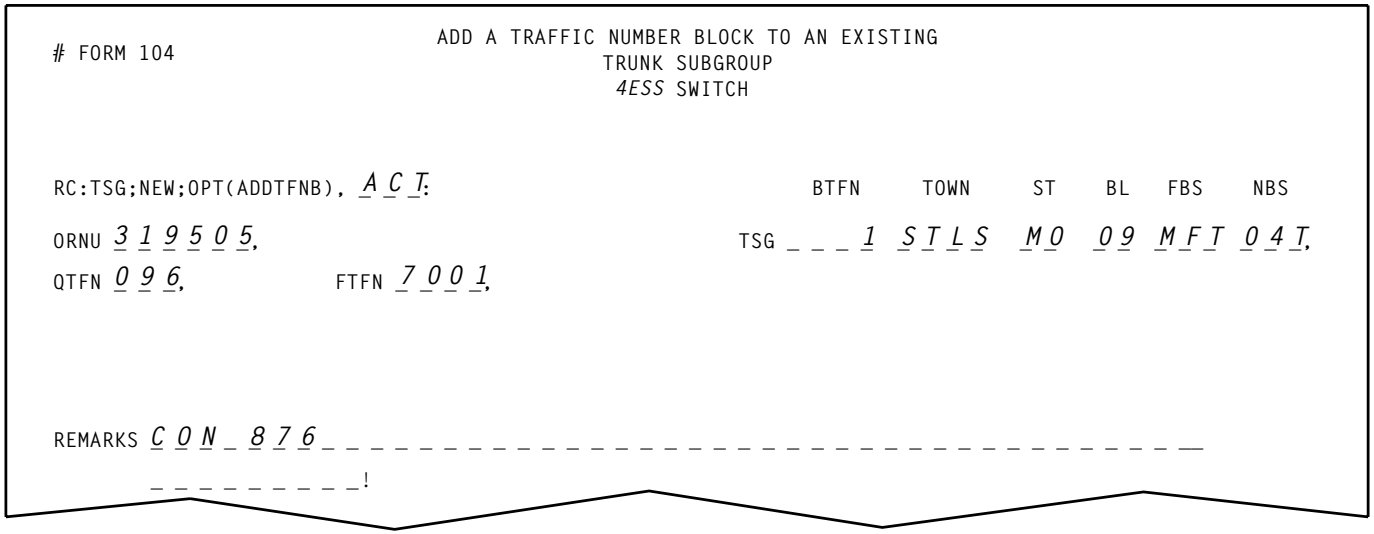

FIG. 1 — Sample of Completed RC Worksheet Form 104

COMPLETE ENTRIES ON RC WORKSHEET FORM 104

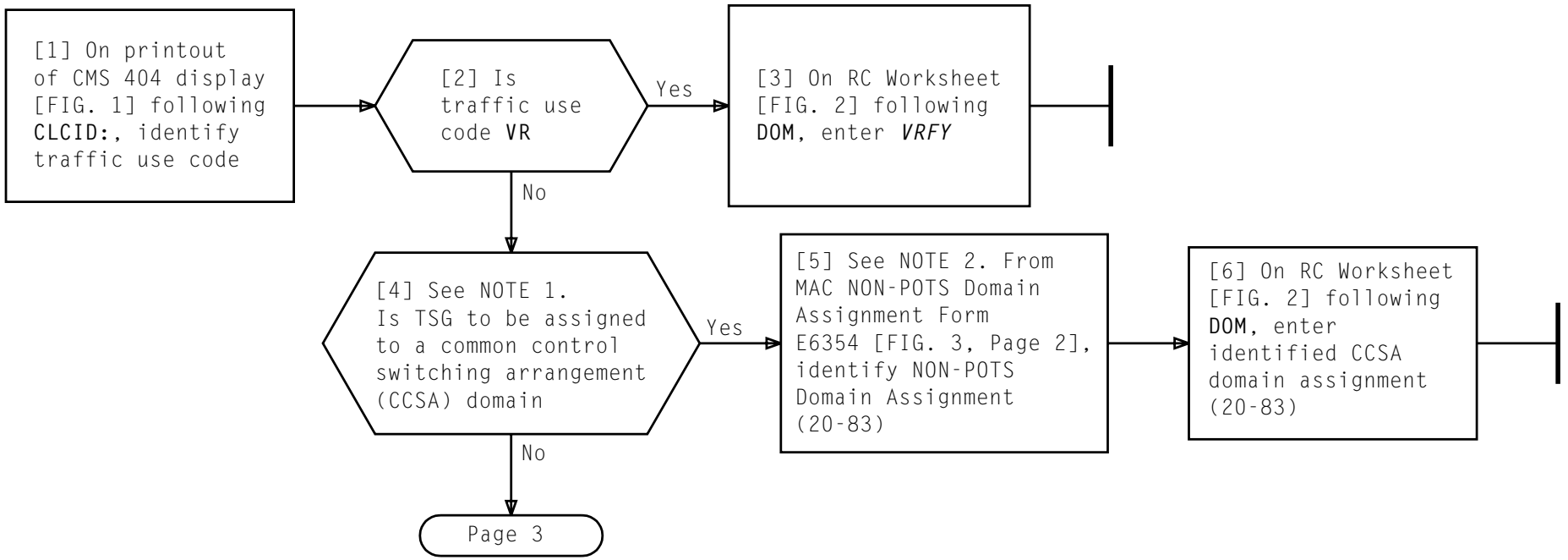

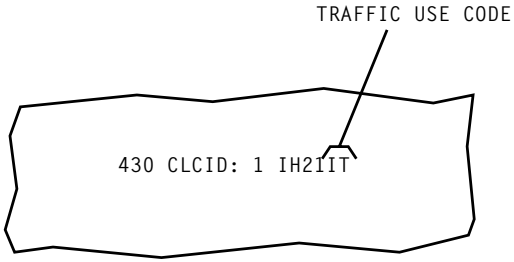

FIG. 1 — Sample Printout of CMS 404 Display (Partial)

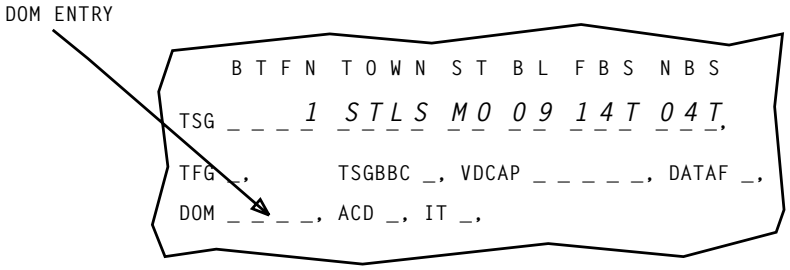

FIG. 2 — Sample RC Worksheet (Partial)

NOTES
1. Common control switching arrangement (CCSA) domains are assigned by the MAC Supervisor
2. DOM 82 is not valid for 1-way trunks

ENTER DOMAIN (DOM) CODE

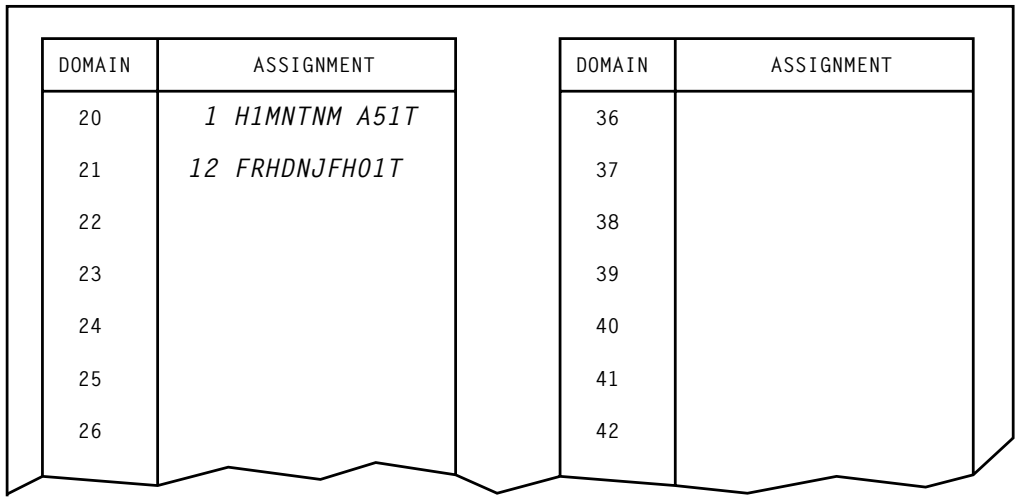

DOMAIN	ASSIGNMENT	DOMAIN	ASSIGNMENT
20	*1 H1MNTNM A51T*	36	
21	*12 FRHDNJFH01T*	37	
22		38	
23		39	
24		40	
25		41	
26		42	

FIG. 3 — Sample NON-POTS Domain Assignment Form E6354 (Partial)

ENTER DOMAIN (DOM) CODE

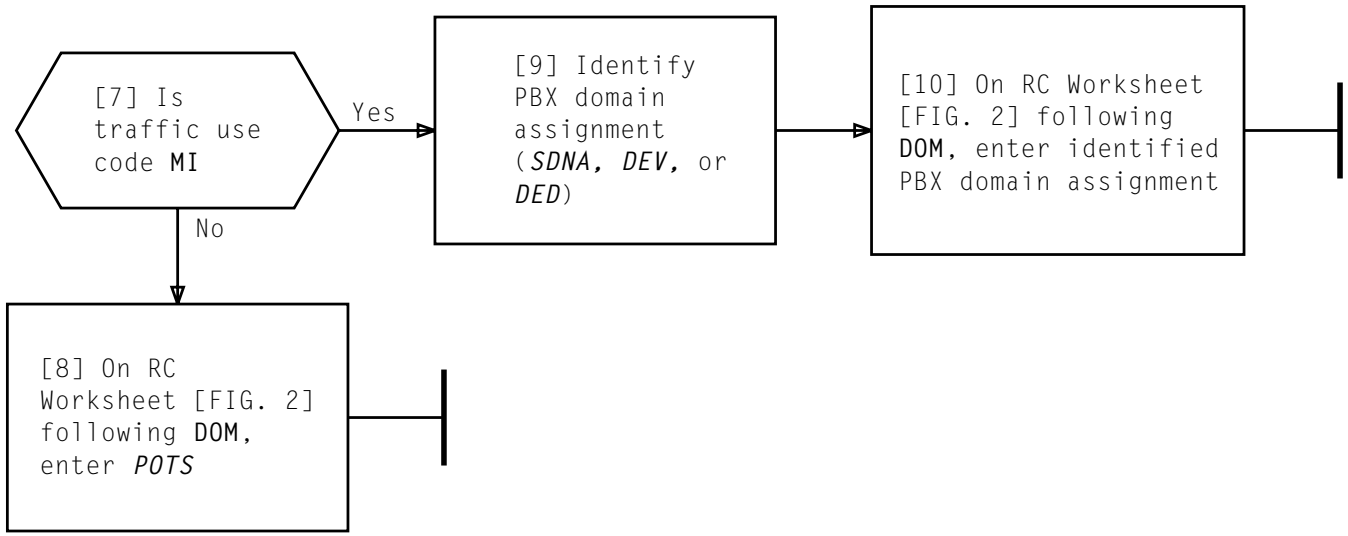

ENTER DOMAIN (DOM) CODE

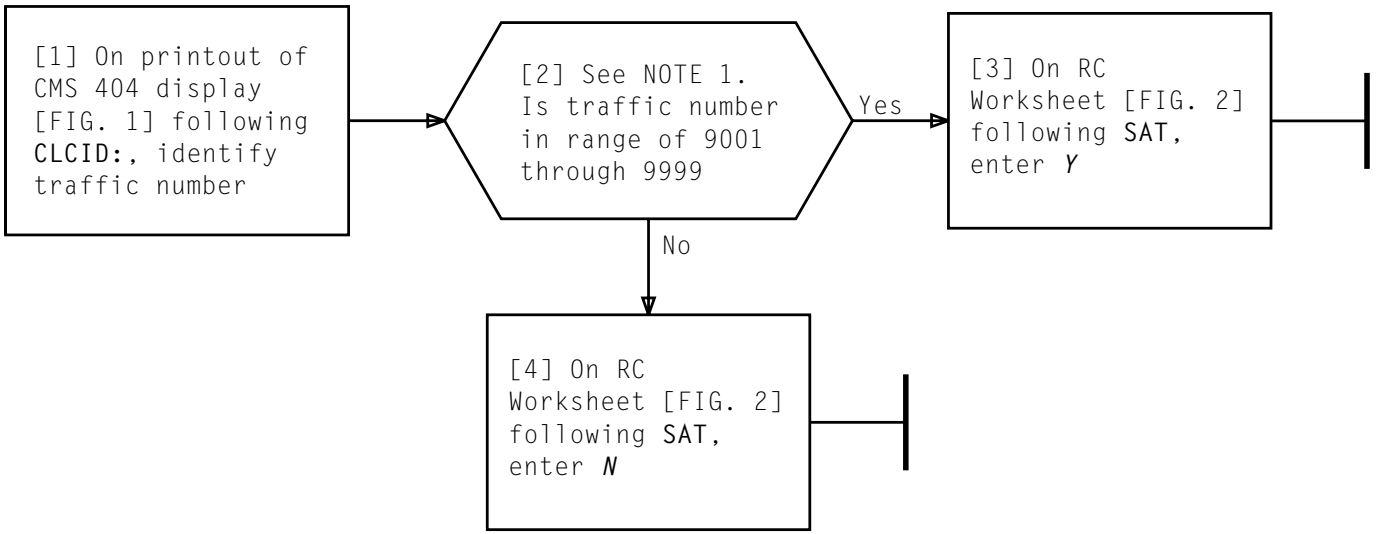

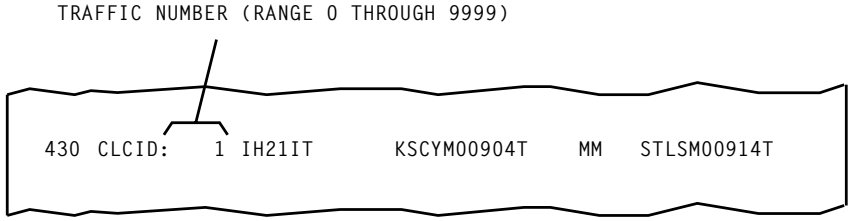

FIG. 1 — Sample Printout of CMS 404 Display (Partial)

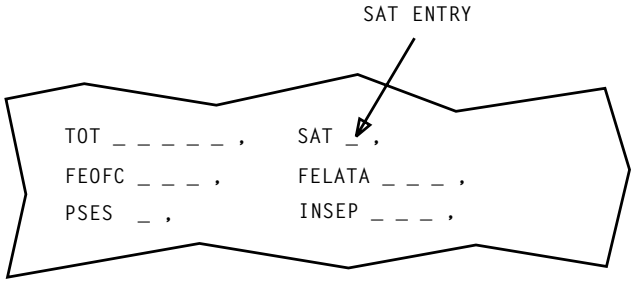

FIG. 2 — Sample RC Worksheet (Partial)

NOTE 1
Per current intertoll trunk numbering plan, traffic numbers 9001 thru 9999 are to be assigned to satellite facilities only

Issue 1	**JAN 1995**
234-152-209	**DLP**
PAGE 1 of 1	**527**

ENTER SATELLITE (SAT) CODE

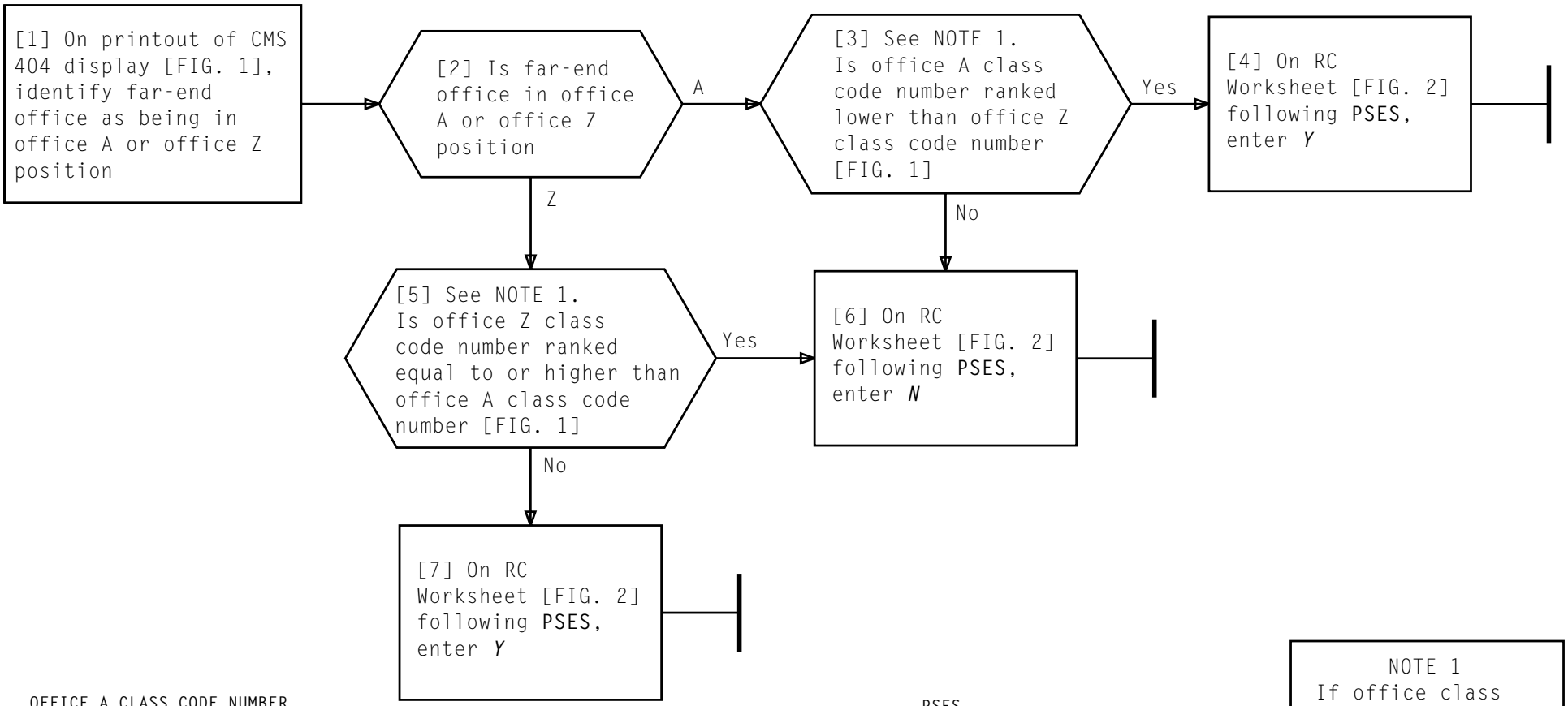

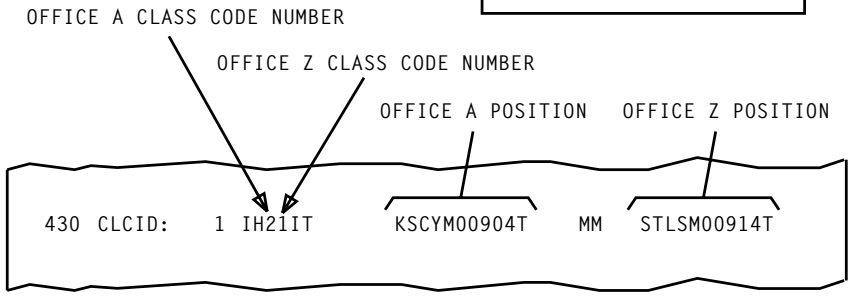

FIG. 1 — Sample Printout of CMS 404 Display (Partial)

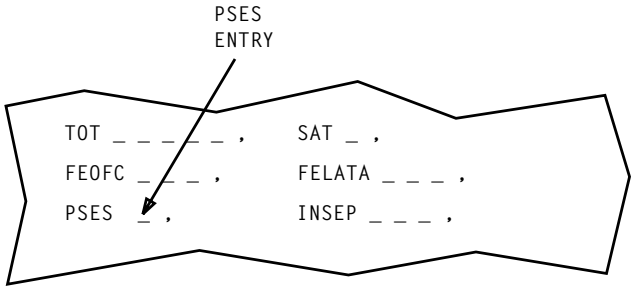

FIG. 2 — Sample RC Worksheet (Partial)

NOTE 1
If office class code is not shown, codes can be obtained from Distance Dialing Coordinating Handbook or other applicable source. Highest office class code = 1; lowest office class code = 5

ENTER PROHIBIT SERVICE EVALUATION (PSES) CODE

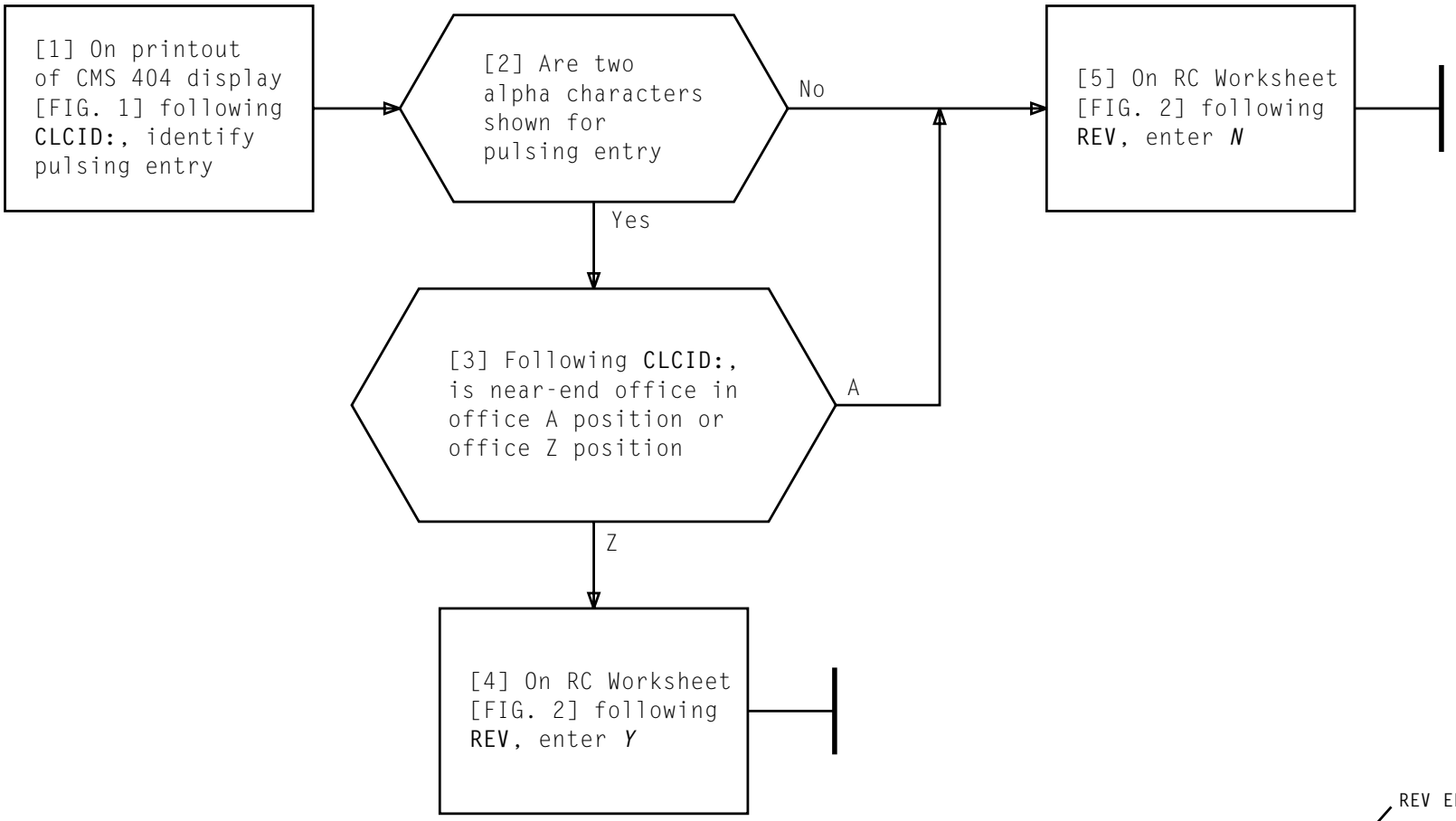

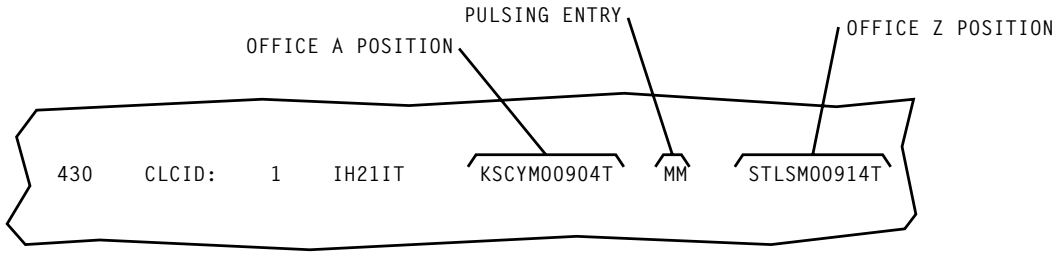

FIG. 1 — Sample Printout of CMS 404 Display (Partial)

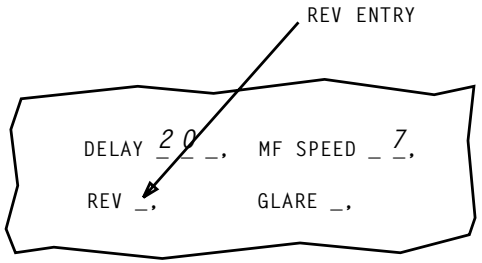

FIG. 2 — Sample RC Worksheet (Partial)

ENTER REVERSE (REV) HUNT CODE

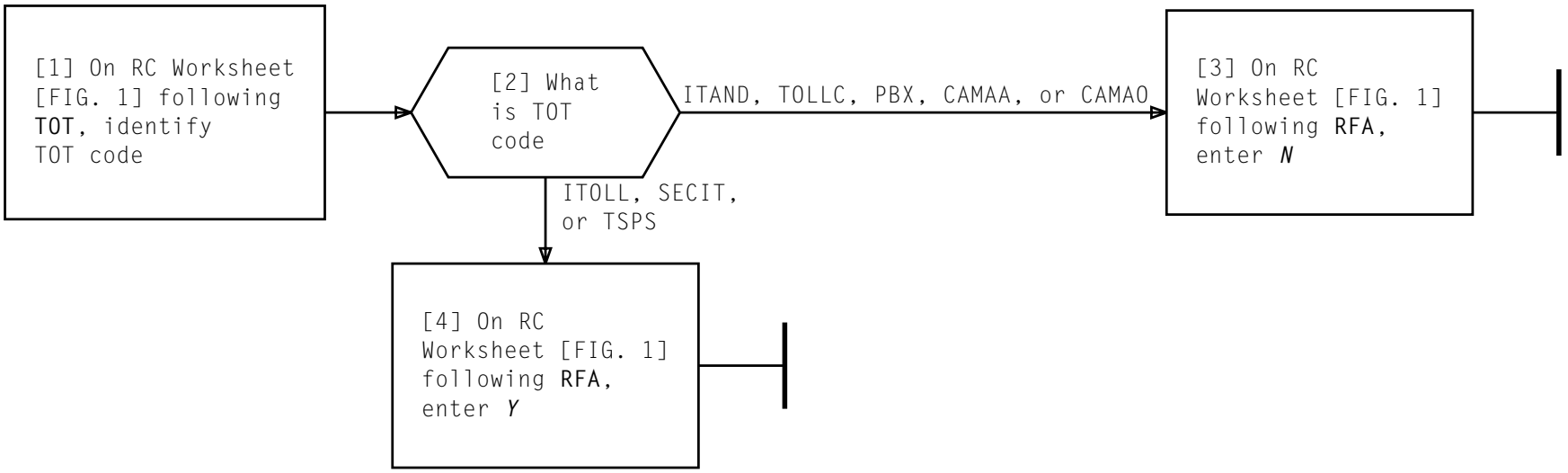

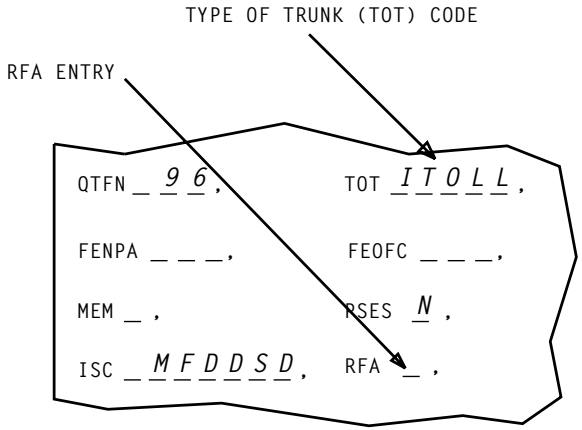

FIG. 1 — Sample RC Worksheet (Partial)

ENTER RING FORWARD ALLOWED (RFA) CODE

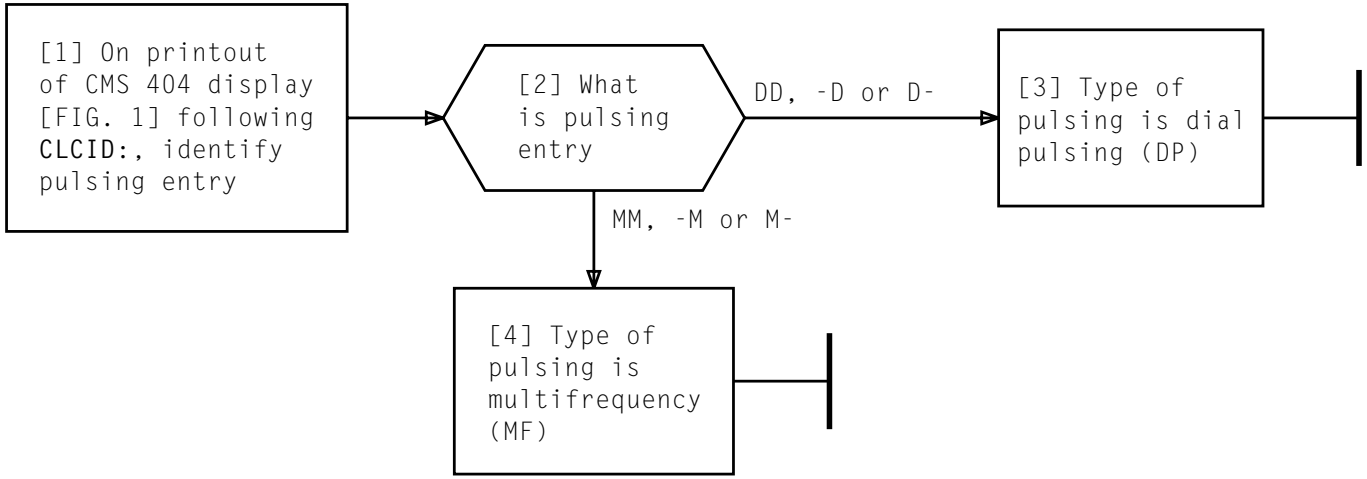

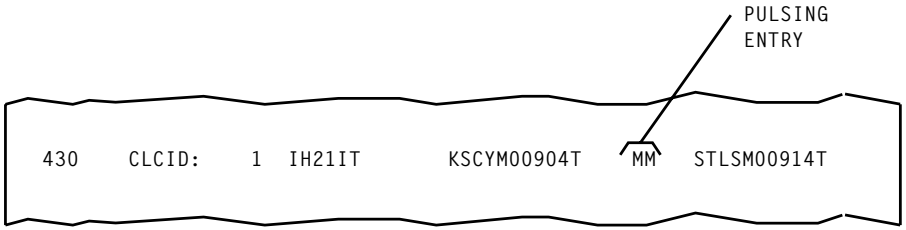

FIG. 1 – Sample Printout of CMS 404 Display (Partial)

DETERMINE TYPE OF PULSING

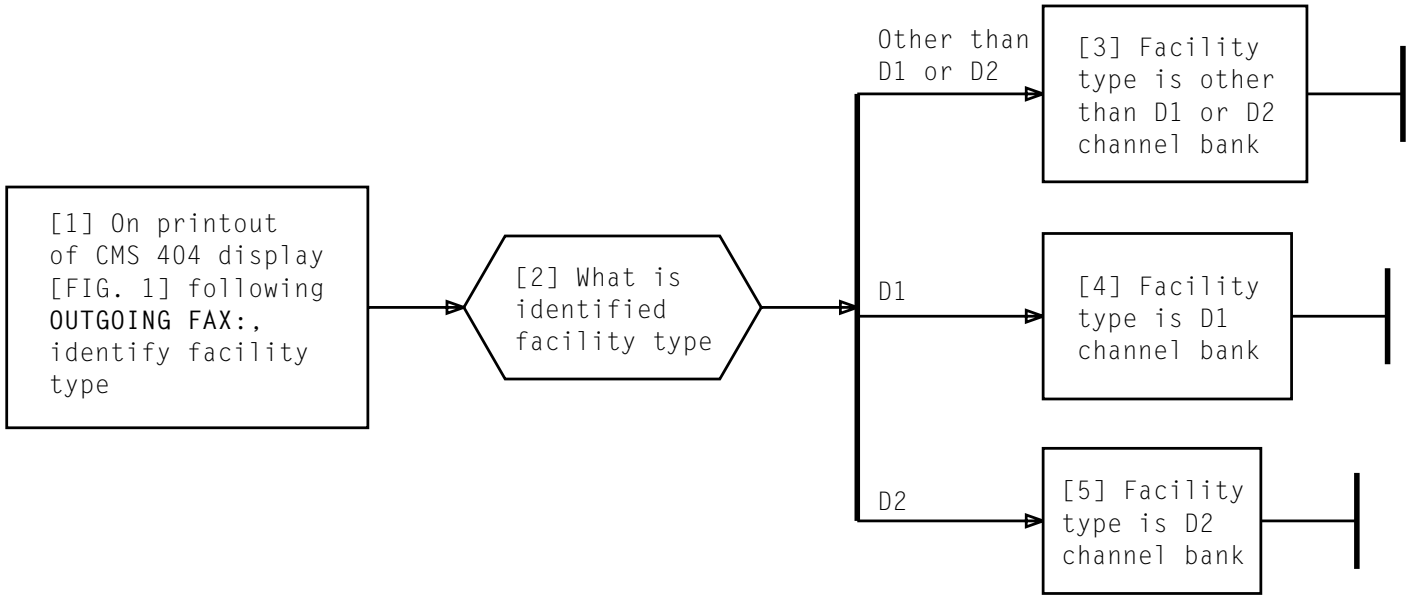


```
404 TRANSLATION DATA
 ---------------------- CIRCUIT ----------------------------
 430 CLCID:   1 IH21IT        KSCYM00904T MM STLSM00906T
     CIN  :   1STLSM00906T04T
     CONTROL:                              CO RESP-TOC/TEC:22/50/
     OWNERSHIP:LL                         MTC RESP-TOC/TEC:22/50/
     ORIGINAL CLCID: (ONLY APPLIES TO NAME CHANGE)

 431 TAN: 10/0/A078  CCIS TERMINAL:     /    BAND:        LABEL:

 432 ABBREVIATED ORDER CODE:               FE CHANNEL BANK:

 ---------------------- FACILITY -----------------------------
 433 OUTGOING FAX:    1     A    1 KSCYM00904T STLSM00906T

 ------------------- CIRCUIT ORDER --------------------------
 434 WORK DATE:  /    TEST DATE:  /    DUE DATE:11/15
 435 CAROT TESTABLE? NO             CAROT TESTS PASSED?
```

FACILITY TYPE

FIG. 1 — Sample Printout of CMS 404 Display

DETERMINE FACILITY TYPE

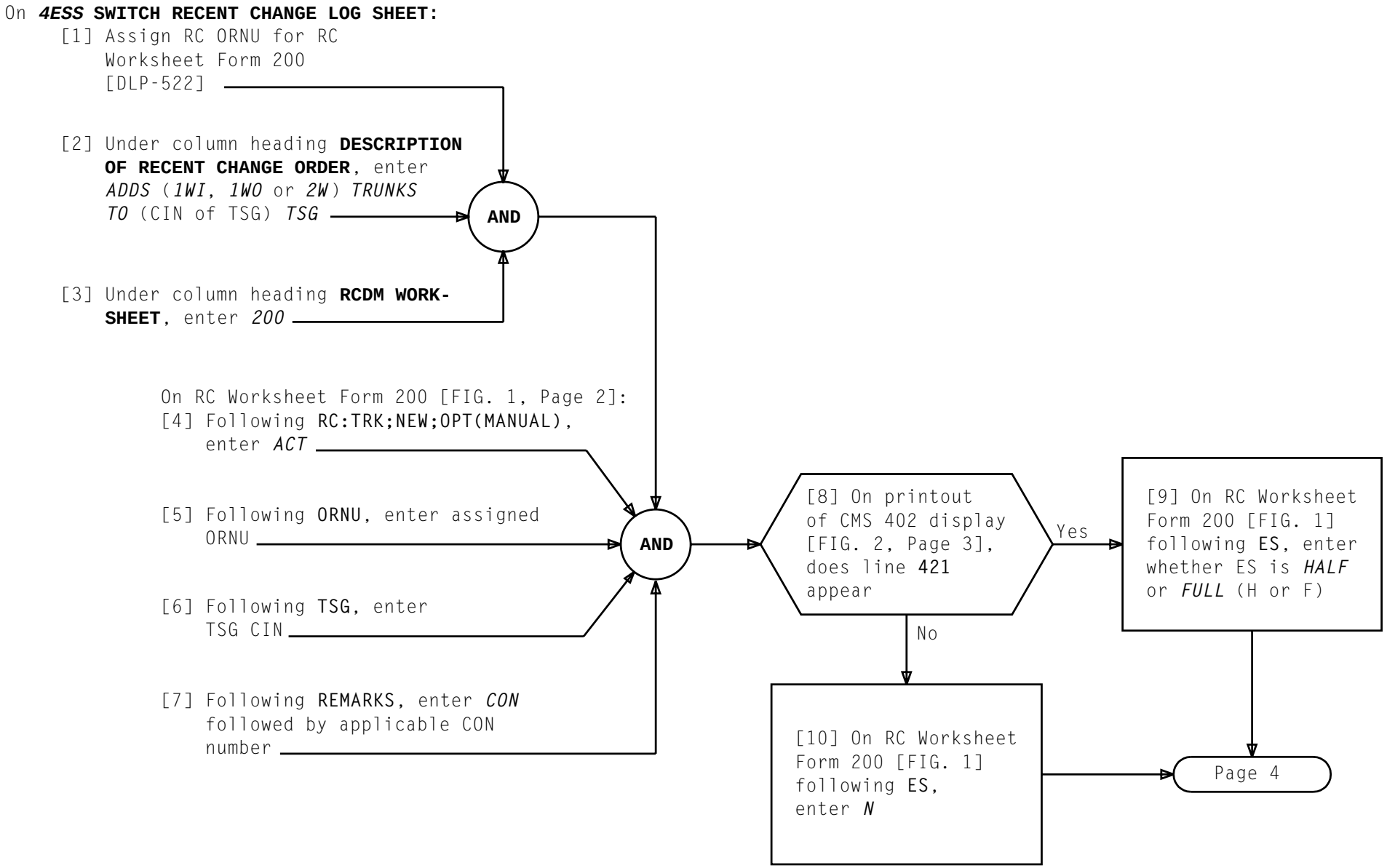

COMPLETE RC WORKSHEET FORM 200 TO ADD NEW TRUNKS TO TSG

```
# FORM 200                ADD NEW TRUNKS, ASSIGN TANS MANUALLY
                                   4ESS SWITCH

RC:TRK;NEW;OPT(MANUAL), A C T:          BTFN     TOWN     ST   BL    FBS    NBS

ORNU 1 2 6 5 3 2,                 TSG _ 1 2 5  O R L D  F L  M A  0 1 T  _ _ _,

ES F U L L,                             D1D2 D 2,

                                   TAN
 QTRK    FTFN     TSI   SPC  LVL   FTS       FCHAN    LACID     FAC   FTRID   VCR    BBC  SCGA
_ 2 4,  _ _ _ 1,  0 1,  0,   4,   0 0 1,     _ _,   _ _ _ _,   _ _,  _ _ _,  _ _ _,  _,   _,
_ _ _,  _ _ _ _,  _ _,  _,   _,   _ _ _,     _ _,   _ _ _ _,   _ _,  _ _ _,  _ _ _,  _,   _,
_ _ _,  _ _ _ _,  _ _,  _,   _,   _ _ _,     _ _,   _ _ _ _,   _ _,  _ _ _,  _ _ _,  _,   _,
_ _ _,  _ _ _ _,  _ _,  _,   _,   _ _ _,     _ _,   _ _ _ _,   _ _,  _ _ _,  _ _ _,  _,   _,
_ _ _,  _ _ _ _,  _ _,  _,   _,   _ _ _,     _ _,   _ _ _ _,   _ _,  _ _ _,  _ _ _,  _,   _,
_ _ _,  _ _ _ _,  _ _,  _,   _,   _ _ _,     _ _,   _ _ _ _,   _ _,  _ _ _,  _ _ _,  _,   _,

REMARKS CON 345 _ _ _ _ _ _ _ _ _ _ _ _ _ _ _ _ _ _ _ _ _ _ _ _ _ _ _ _ _ _ _ _ _ _ _

        _ _ _ _ _ _ _ _ _!
```

FIG. 1 — Sample of Completed RC Worksheet Form 200

COMPLETE RC WORKSHEET FORM 200 TO ADD NEW TRUNKS TO TSG

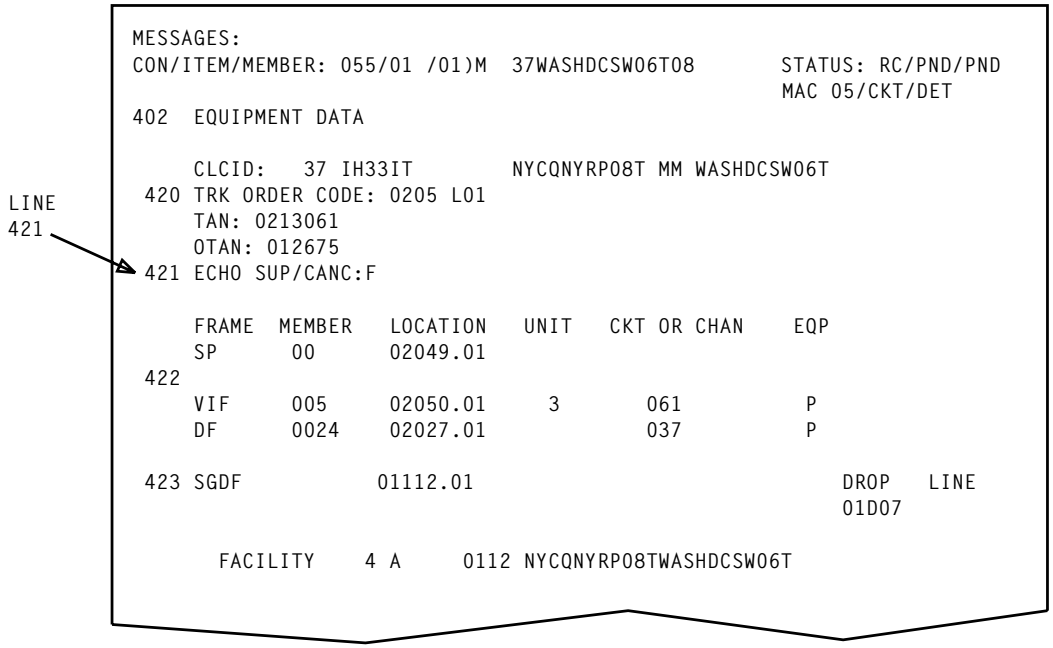

FIG. 2 – Sample Printout of CMS 402 Display

COMPLETE RC WORKSHEET FORM 200 TO ADD NEW TRUNKS TO TSG

[11] On RC Worksheet Form 200 [FIG. 1, Page 2] following **D1D2**, leave entry blank

[12] Obtain ***4ESS*** **SWITCH FACILITY ASSIGNMENT RECORD** or equivalent local form identifying facility for far-end office

[13] On ***4ESS*** **SWITCH FACILITY ASSIGNMENT RECORD** or equivalent local form, identify CARTS Worksheet page number for facility [DLP-546]

[14] Turn to identified CARTS Worksheet page in CARTS Worksheet book

[15] Examine CINs listed on identified CARTS Worksheet

AND

[16] Are CINs listed in numerical sequence with no break in numerical order within assigned facility

Yes → Page 5

No

On first blank line under **QTRK** on RC Worksheet Form 200 [FIG. 1, Page 2]:

[17] Under **FTFN**, enter lowest TFN on CARTS Worksheet not previously entered

[18] Under **QTRK**, enter number of trunks without any break in traffic numbers within assigned facility (not to exceed 12 for international or 24 for domestic)

[19] Under **TAN**, enter TAN associated with first TFN (FTFN)

[20] Under **FCHAN**, leave entry blank

AND → Page 5, Step 25

COMPLETE RC WORKSHEET FORM 200 TO ADD NEW TRUNKS TO TSG

On first blank line under **QTRK** on RC Worksheet Form 200 [FIG. 1, Page 2]:

[21] Under **FTFN**, enter lowest TFN on CARTS Worksheet not previously entered

[22] Under **QTRK**, enter total number of trunks listed within assigned facility (not to exceed 12 for international or 24 for domestic)

[23] Under **TAN**, enter TAN associated with first TFN (FTFN)

[24] Under **FCHAN**, leave entry blank

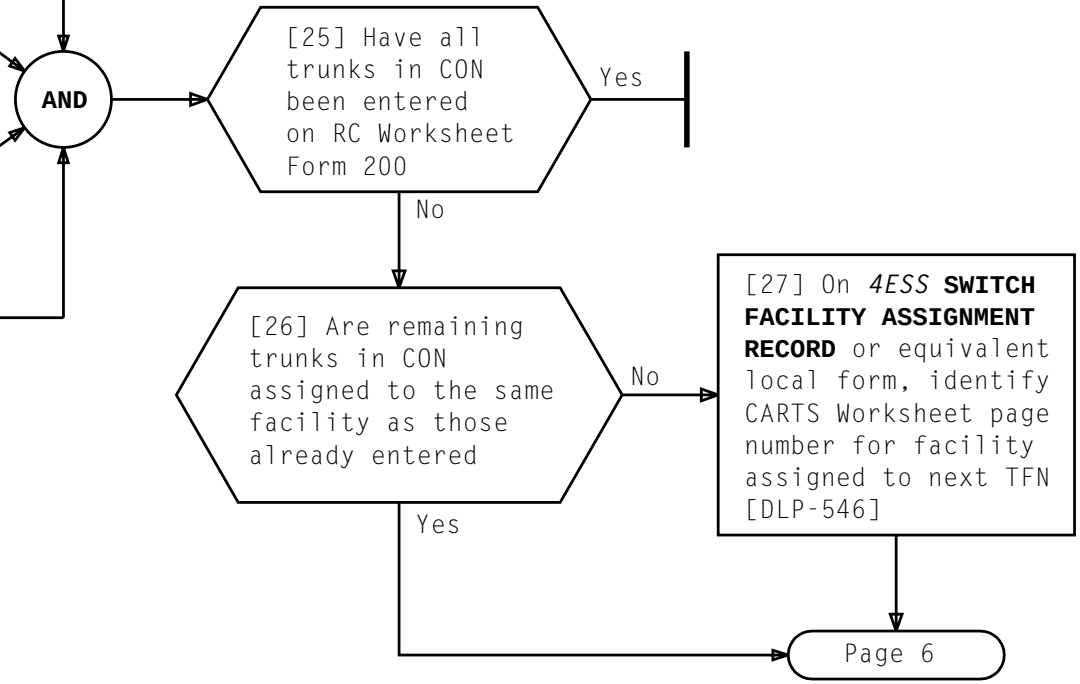

COMPLETE RC WORKSHEET FORM 200 TO ADD NEW TRUNKS TO TSG

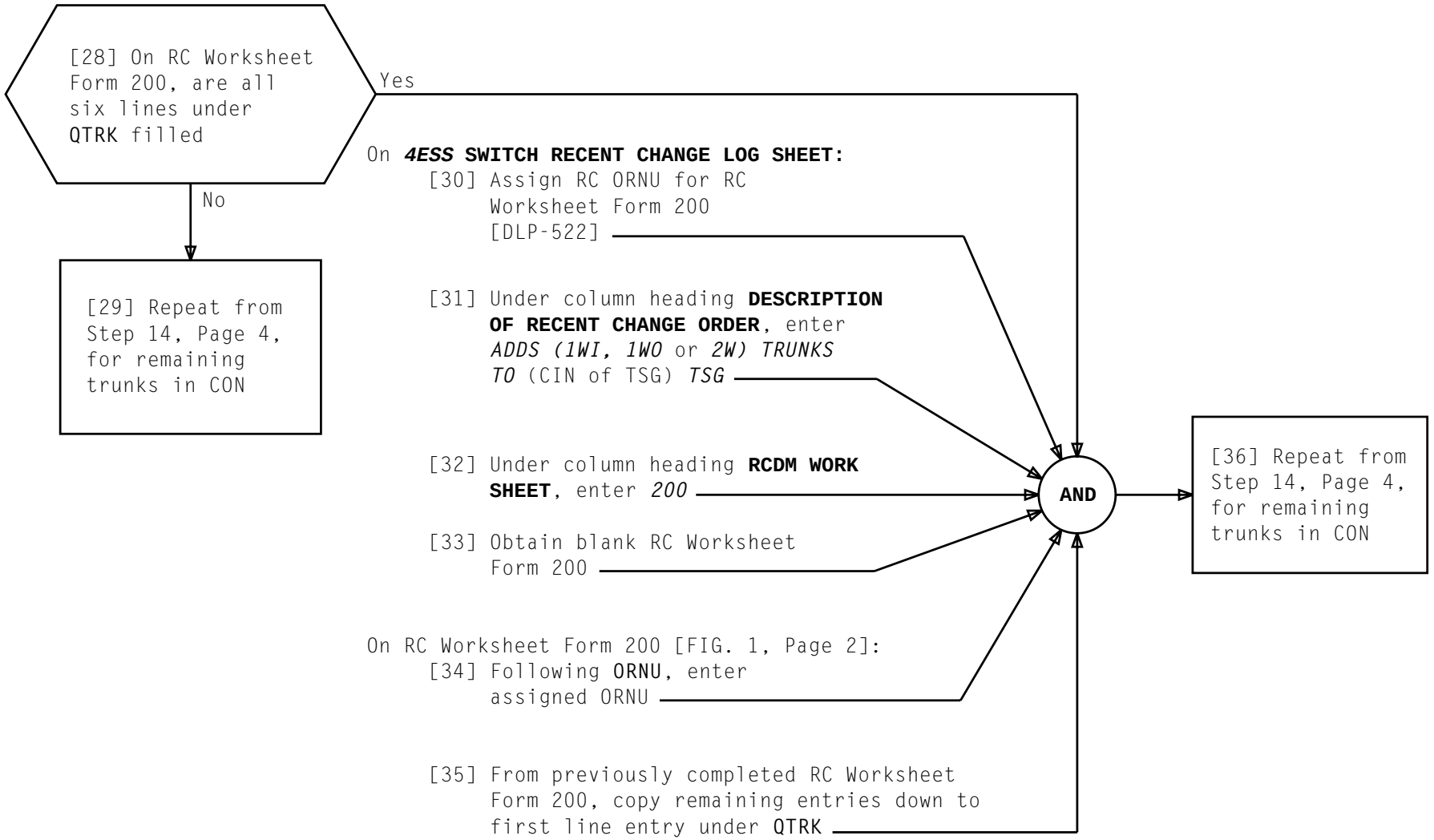

COMPLETE RC WORKSHEET FORM 200 TO ADD NEW TRUNKS TO TSG

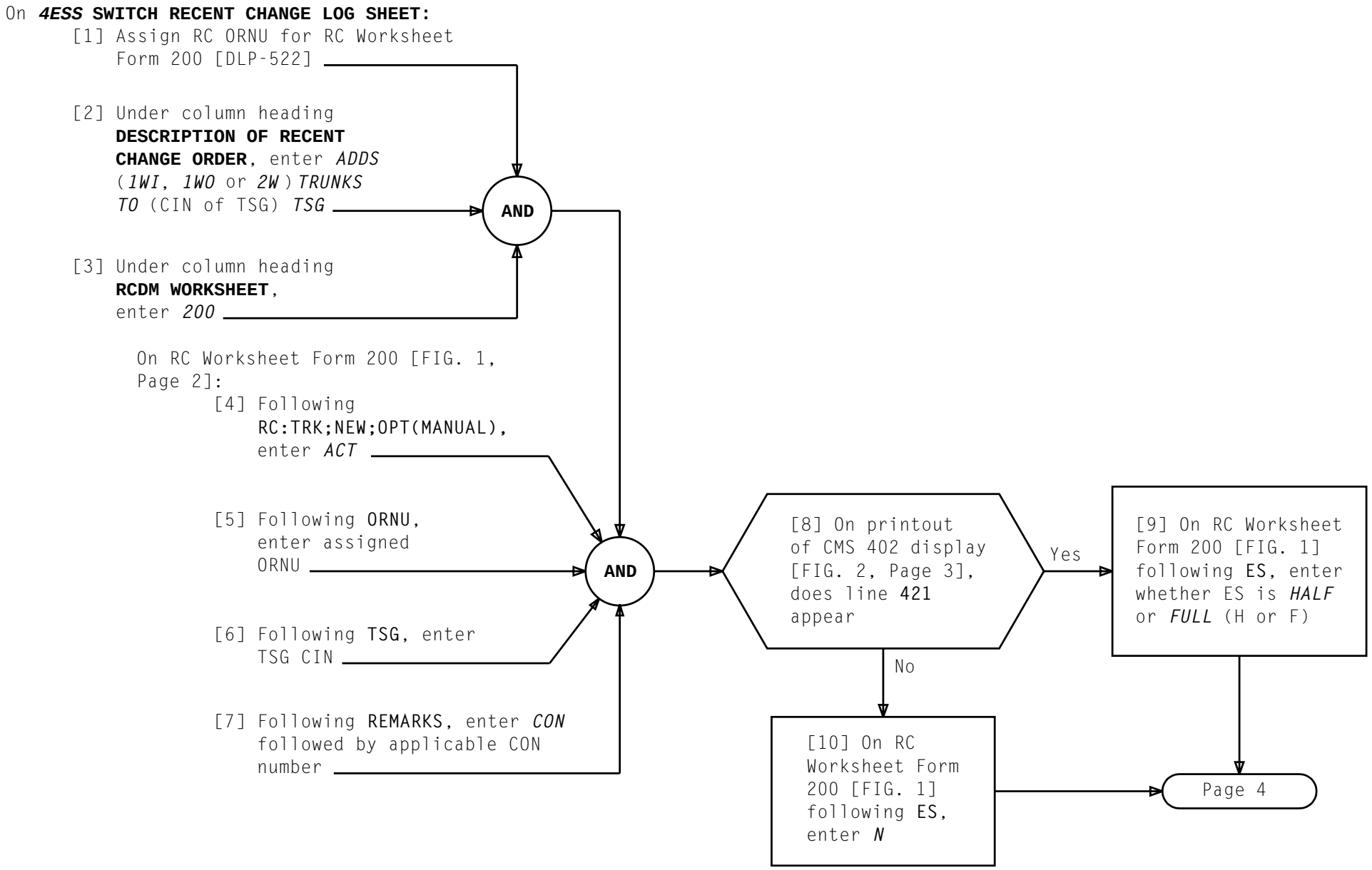

COMPLETE RC WORKSHEET FORM 200 TO ADD NEW TRUNKS TO TSG (D1 CHANNEL BANK)

FORM 200 ADD NEW TRUNKS, ASSIGN TANS MANUALLY

4ESS SWITCH

RC:TRK;NEW;OPT(MANUAL), *A C T*:

	BTFN	TOWN	ST	BL	FBS	NBS
TSG _	*1 2 5*	*O R L D*	*F L*	*M A*	*0 1 T*	_ _ _,

ORNU *1 2 6 5 3 2*,

ES *F U L L*,

D1D2 *D 1*,

QTRK	FTFN	TAN TSI	TAN SPC	TAN LVL	FTS	FCHAN	LACID	FAC	FTRID	VCR	BBC	SCGA
_ *2 4*,	_ _ _ *1*,	*0 1*,	*0*,	*4*,	*0 0 1*,	_ _,	_ _ _ _,	_ _,	_ _ _,	_ _ _,	_,	_,
_ _ _,	_ _ _ _,	_ _,	_,	_,	_ _ _,	_ _,	_ _ _ _,	_ _,	_ _ _,	_ _ _,	_,	_,
_ _ _,	_ _ _ _,	_ _,	_,	_,	_ _ _,	_ _,	_ _ _ _,	_ _,	_ _ _,	_ _ _,	_,	_,
_ _ _,	_ _ _ _,	_ _,	_,	_,	_ _ _,	_ _,	_ _ _ _,	_ _,	_ _ _,	_ _ _,	_,	_,
_ _ _,	_ _ _ _,	_ _,	_,	_,	_ _ _,	_ _,	_ _ _ _,	_ _,	_ _ _,	_ _ _,	_,	_,
_ _ _,	_ _ _ _,	_ _,	_,	_,	_ _ _,	_ _,	_ _ _ _,	_ _,	_ _ _,	_ _ _,	_,	_,

REMARKS *CON 346* _

_ _ _ _ _ _ _ _ _ !

FIG. 1 — Sample of Completed RC Worksheet Form 200

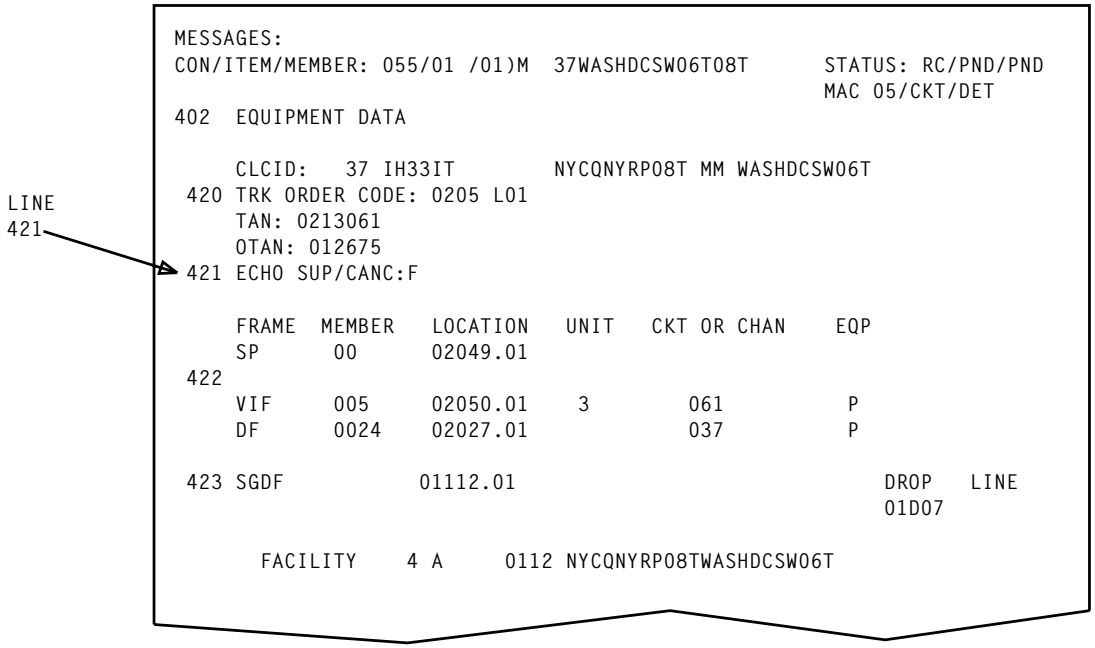

FIG. 2 – Sample Printout of CMS 402 Display

COMPLETE RC WORKSHEET FORM 200 TO ADD NEW TRUNKS TO TSG (D1 CHANNEL BANK)

[11] On RC Worksheet Form 200 [FIG. 1, Page 2] following D1D2, enter *D1*

[12] Obtain ***4ESS* SWITCH FACILITY ASSIGNMENT RECORD** or equivalent local form identifying facility for far-end office

[13] On ***4ESS* SWITCH FACILITY ASSIGNMENT RECORD** or equivalent local form, identify CARTS Worksheet page number for facility [DLP-546]

[14] Turn to identified CARTS Worksheet page in CARTS Worksheet book

AND

[15] On CARTS Worksheet under column heading **TRAF. NO.**, do last two digits of traffic numbers match any single one of the four columns listed in TABLE A, Page 8, under column heading **TRAFFIC NO. 01-24, 25-48, 49-72** or **73-96**

No → Page 6

Yes

On RC Worksheet Form 200 [FIG. 1]:

[16] Under FTFN, enter lowest TFN on CARTS Worksheet not previously entered

[17] Under QTRK, enter total number of trunks listed within assigned facility (not to exceed 24)

[18] Under TAN, enter first TAN shown on CARTS worksheet

[19] Under FCHAN, enter far-end channel associated with first TFN (FTFN) per TABLE A, Page 8

AND

[20] Are there still TFNs traffic numbers to be entered from CON which do not appear in present facility

No

Yes → Page 5

COMPLETE RC WORKSHEET FORM 200 TO ADD NEW TRUNKS TO TSG (D1 CHANNEL BANK)

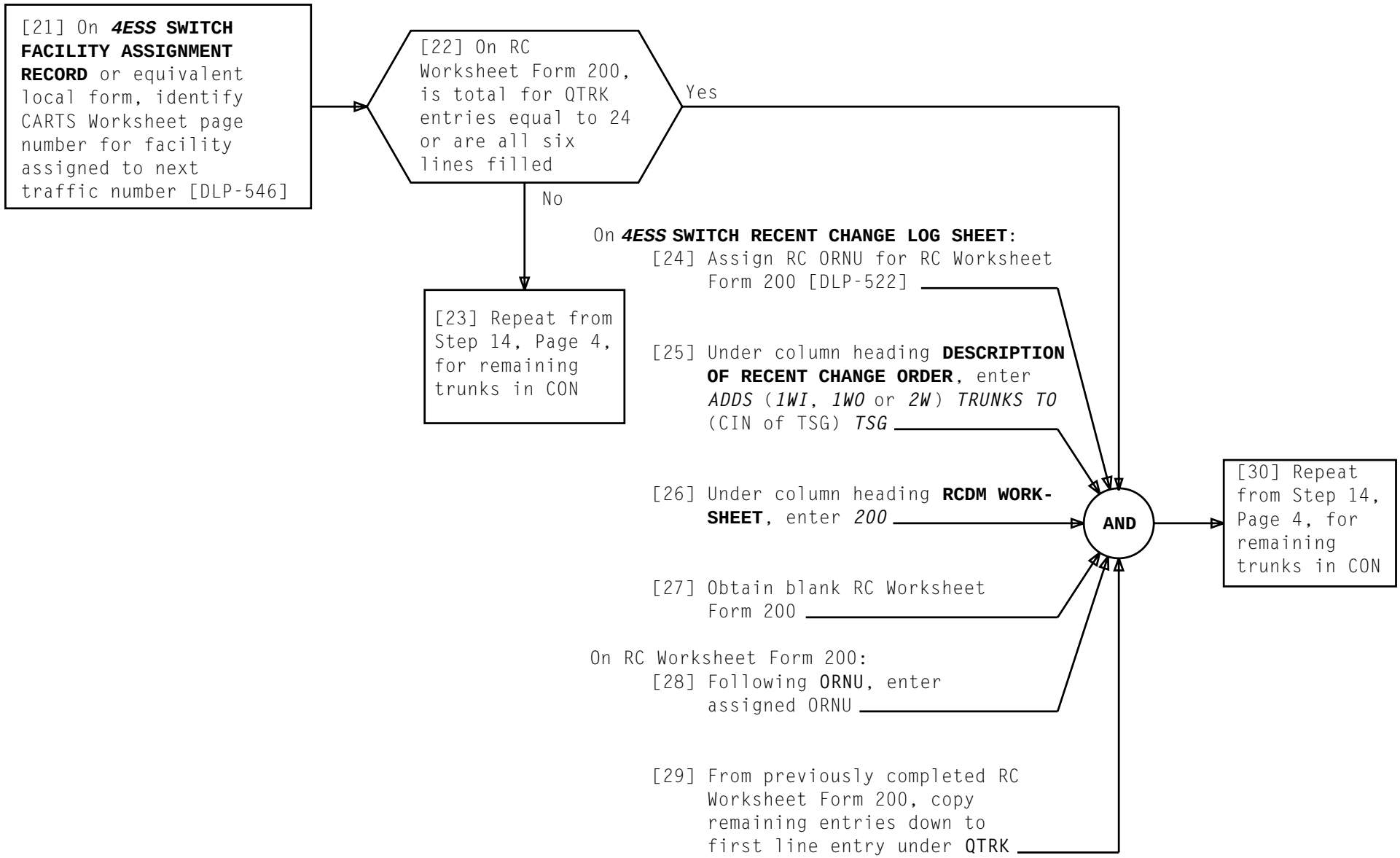

COMPLETE RC WORKSHEET FORM 200 TO ADD NEW TRUNKS TO TSG (D1 CHANNEL BANK)

[31] Obtain reproduced copy of TABLE B, Page 8

[32] On CARTS Worksheet under column heading **TAN**, identify first time slot (FTS)

[33] In TABLE B under column heading **DT TIME SLOTS**, locate identified time slot number

[34] In TABLE B under column heading **ASSOC. TRAF. NO.**, enter TFN (from CARTS worksheet) assigned to identified time slot number

[35] On CARTS Worksheet under column heading **TAN**, identify next time slot number and repeat from Step 33 until all time slots assigned to activated CON have an associated traffic number

AND

On RC Worksheet Form 200, using associated traffic numbers listed in TABLE B:

[36] Under **FTFN**, enter lowest traffic number in completed TABLE B not previously entered

[37] Under **QTRK**, enter quantity of traffic numbers without any break in sequence beginning with FTFN

[38] Under **TAN**, enter TAN associated with first traffic number (FTFN) from CARTS Worksheet

[39] Under **FCHAN**, enter far-end channel associated with first traffic number (FTFN) per TABLE B

AND

Page 7

COMPLETE RC WORKSHEET FORM 200 TO ADD NEW TRUNKS TO TSG (D1 CHANNEL BANK)

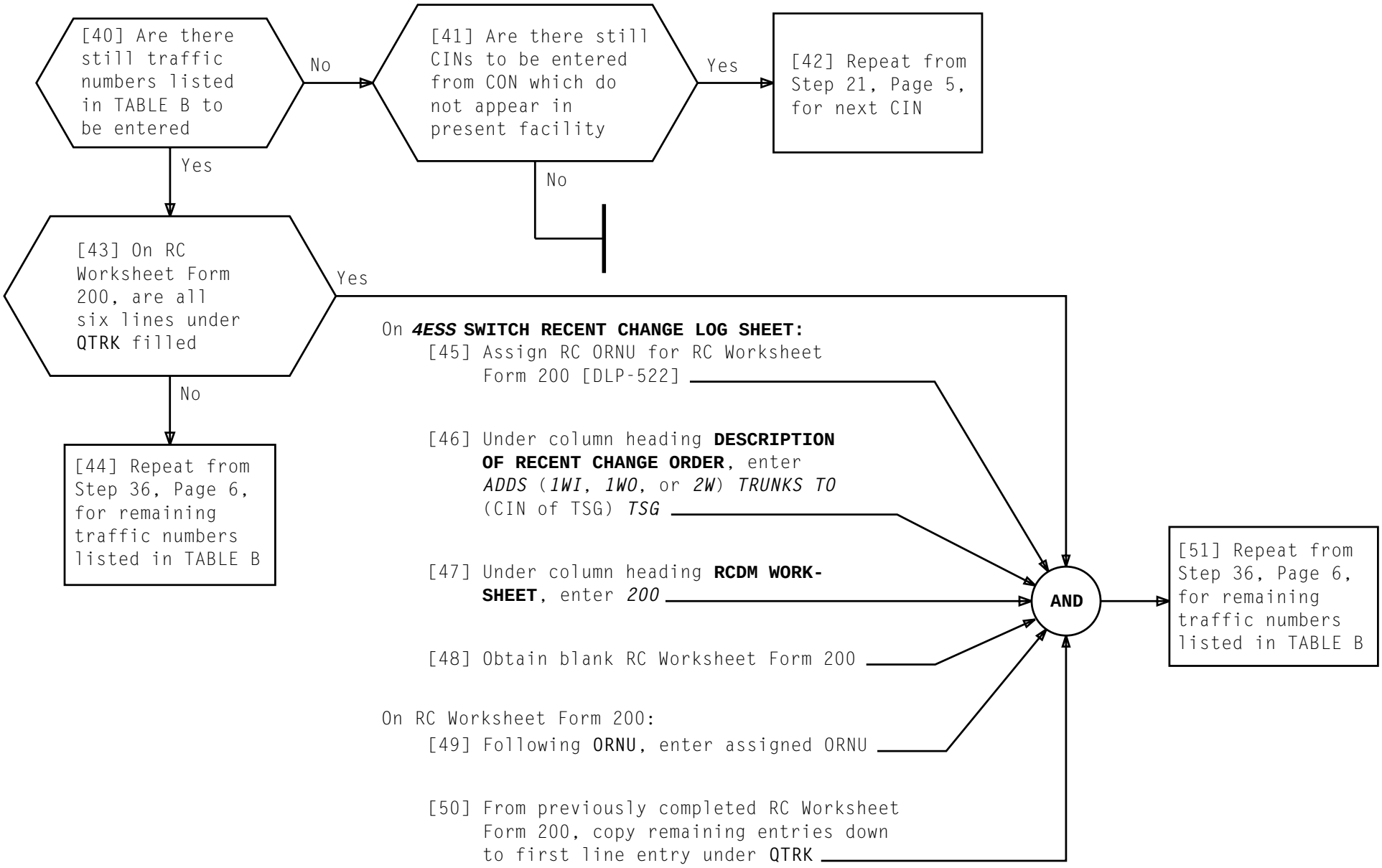

COMPLETE RC WORKSHEET FORM 200 TO ADD NEW TRUNKS TO TSG (D1 CHANNEL BANK)

TABLE A — D1				
TRAFFIC NO.				FAR-END CHANNEL
01-24	25-48	49-72	73-96	
01	25	49	73	1
13	37	61	85	13
02	26	50	74	2
14	38	62	86	14
03	27	51	75	3
15	39	63	87	15
04	28	52	76	4
16	40	64	88	16
05	29	53	77	5
17	41	65	89	17
06	30	54	78	6
18	42	66	90	18
07	31	55	79	7
19	43	67	91	19
08	32	56	80	8
20	44	68	92	20
09	33	57	81	9
21	45	69	93	21
10	34	58	82	10
22	46	70	94	22
11	35	59	83	11
23	47	71	95	23
12	36	60	84	12
24	48	72	96	24

TABLE B — D1						
DT TIME SLOTS					ASSOC. TRAF. NO.	FAR-END CHANNEL
001-024	025-048	049-072	073-096	097-120		
001	025	049	073	097		1
003	027	051	075	099		2
005	029	053	077	101		3
007	031	055	079	103		4
009	033	057	081	105		5
011	035	059	083	107		6
013	037	061	085	109		7
015	039	063	087	111		8
017	041	065	089	113		9
019	043	067	091	115		10
021	045	069	093	117		11
023	047	071	095	119		12
002	026	050	074	098		13
004	028	052	076	100		14
006	030	054	078	102		15
008	032	056	080	104		16
010	034	058	082	106		17
012	036	060	084	108		18
014	038	062	086	110		19
016	040	064	088	112		20
018	042	066	090	114		21
020	044	068	092	116		22
022	046	070	094	118		23
024	048	072	096	120		24

COMPLETE RC WORKSHEET FORM 200 TO ADD NEW TRUNKS TO TSG (D1 CHANNEL BANK)

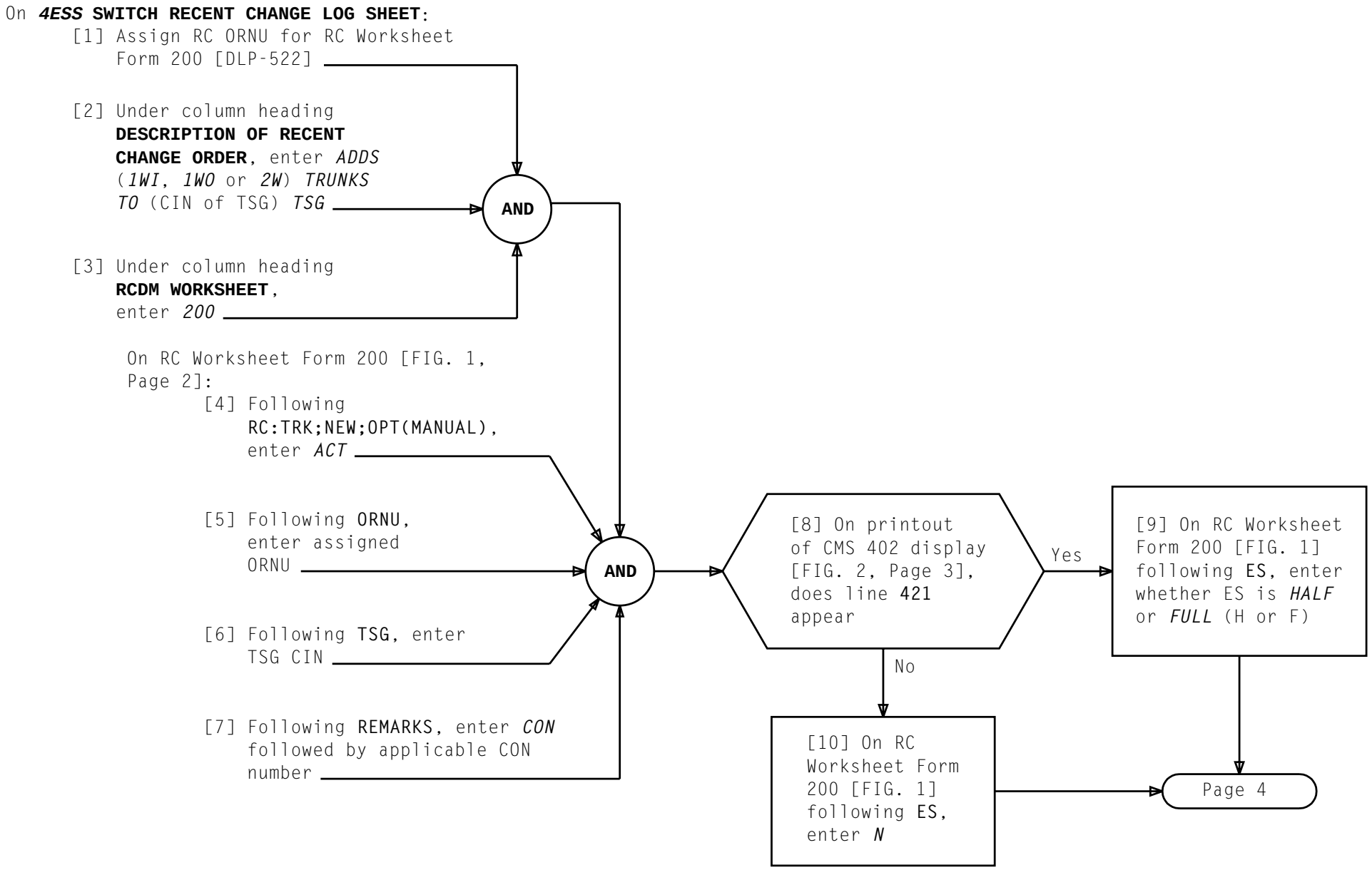

COMPLETE RC WORKSHEET FORM 200 TO ADD NEW TRUNKS TO TSG (D2 CHANNEL BANK)

```
# FORM 200                    ADD NEW TRUNKS, ASSIGN TANS MANUALLY
                                          4ESS SWITCH

RC:TRK;NEW;OPT(MANUAL), A C T:            BTFN     TOWN     ST   BL    FBS    NBS

ORNU 1 2 6 5 3 2,                     TSG _ 1 2 5  O R L D  F L  M A  0 1 T  _ _ _,

ES F U L L,                               D1D2 D 2,

                              TAN
 QTRK     FTFN      TSI    SPC   LVL    FTS        FCHAN     LACID    FAC    FTRID   VCR    BBC  SCGA
_ 1 2,  _ _ _ 1,   0 1,    0,    4,   0 0 1,       _ 1,    _ _ _ _,  _ _,   _ _ _,  _ _ _,  _,   _,
_ _ _,  _ _ _ _,   _ _,    _,    _,   _ _ _,       _ _,    _ _ _ _,  _ _,   _ _ _,  _ _ _,  _,   _,
_ _ _,  _ _ _ _,   _ _,    _,    _,   _ _ _,       _ _,    _ _ _ _,  _ _,   _ _ _,  _ _ _,  _,   _,
_ _ _,  _ _ _ _,   _ _,    _,    _,   _ _ _,       _ _,    _ _ _ _,  _ _,   _ _ _,  _ _ _,  _,   _,
_ _ _,  _ _ _ _,   _ _,    _,    _,   _ _ _,       _ _,    _ _ _ _,  _ _,   _ _ _,  _ _ _,  _,   _,
_ _ _,  _ _ _ _,   _ _,    _,    _,   _ _ _,       _ _,    _ _ _ _,  _ _,   _ _ _,  _ _ _,  _,   _,

REMARKS CON 890 _ _ _ _ _ _ _ _ _ _ _ _ _ _ _ _ _ _ _ _ _ _ _ _ _ _ _ _ _ _ _ _ _ _ _
        _ _ _ _ _ _ _ _ _!
```

FIG. 1 — Sample of Completed RC Worksheet Form 200

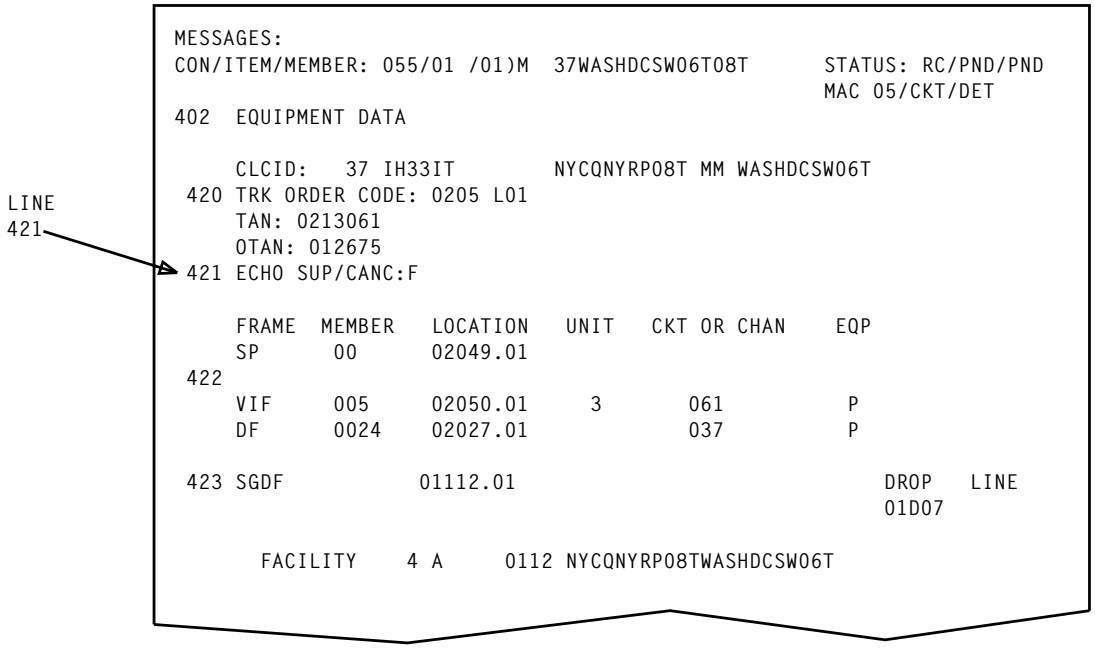

FIG. 2 — Sample Printout of CMS 402 Display

COMPLETE RC WORKSHEET FORM 200 TO ADD NEW TRUNKS TO TSG (D2 CHANNEL BANK)

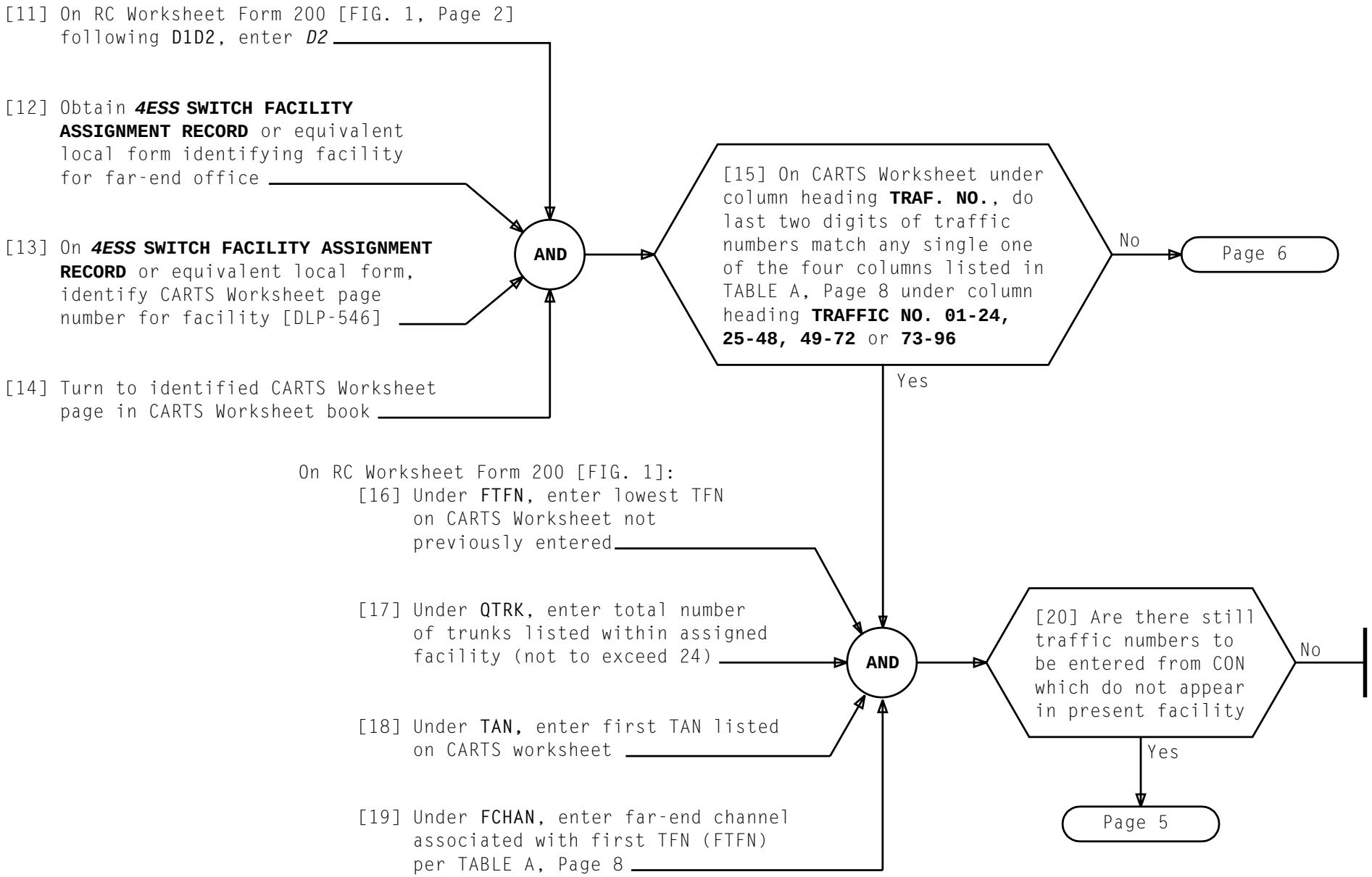

COMPLETE RC WORKSHEET FORM 200 TO ADD NEW TRUNKS TO TSG (D2 CHANNEL BANK)

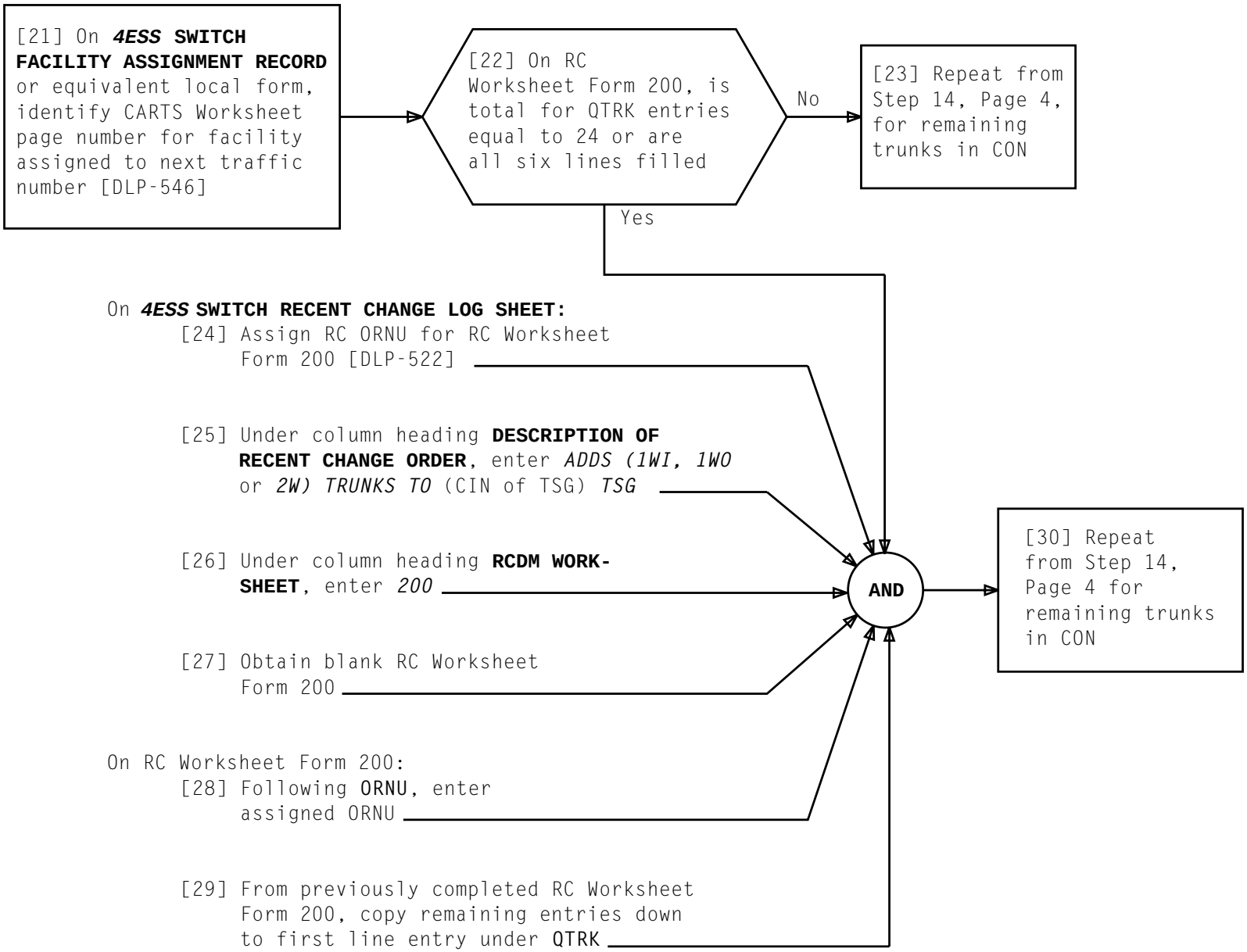

COMPLETE RC WORKSHEET FORM 200 TO ADD NEW TRUNKS TO TSG (D2 CHANNEL BANK)

[31] Obtain reproduced copy of TABLE B, Page 8

[32] On CARTS Worksheet under column heading **TAN**, identify first time slot (FTS)

[33] In TABLE B under column heading **DT TIME SLOTS**, locate identified time slot number

[34] In TABLE B under column heading **ASSOC. TRAF. NO.**, enter TFN (from CARTS Worksheet) assigned to identified time slot number

[35] On CARTS Worksheet under column heading **TAN**, identify next time slot number and repeat from Step 33 until all time slots assigned to activated CON have an associated traffic number

AND

On RC Worksheet Form 200, using associated traffic numbers listed in TABLE B:

[36] Under **FTFN**, enter lowest traffic number in completed TABLE B not previously entered

[37] Under **QTRK**, enter quantity of traffic numbers without any break in sequence beginning with FTFN

[38] Under **TAN**, enter TAN associated with first traffic number (FTFN) from CARTS Worksheet

[39] Under **FCHAN**, enter far-end channel associated with first traffic number (FTFN) per TABLE B

AND

Page 7

COMPLETE RC WORKSHEET FORM 200 TO ADD NEW TRUNKS TO TSG (D2 CHANNEL BANK)

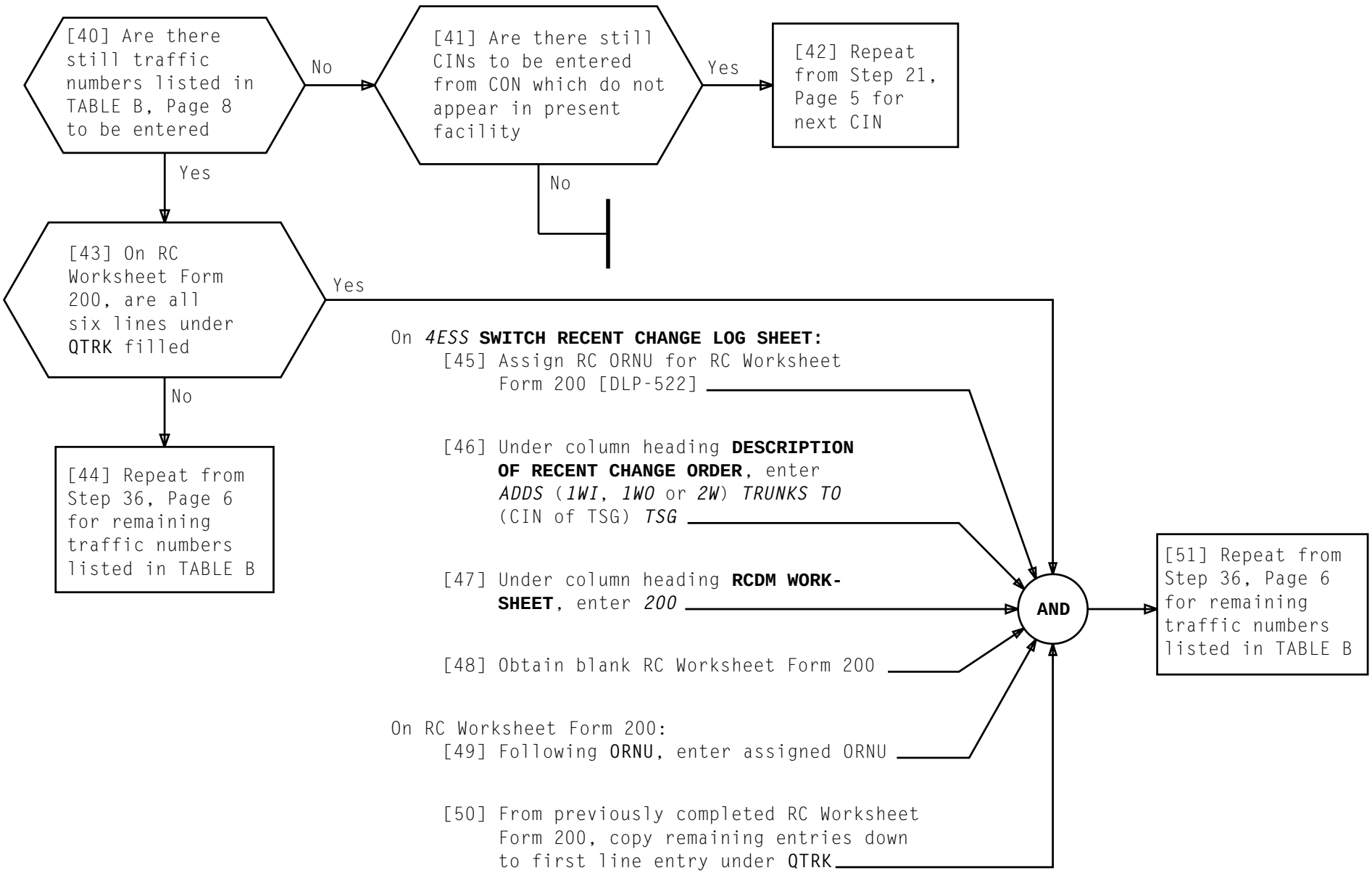

COMPLETE RC WORKSHEET FORM 200 TO ADD NEW TRUNKS TO TSG (D2 CHANNEL BANK)

TABLE A — D2				
TRAFFIC NO.				FAR-END CHANNEL
01-24	25-48	49-72	73-96	
12	36	60	84	12
13	37	61	85	13
01	25	49	73	1
17	41	65	89	17
05	29	53	77	5
21	45	69	93	21
09	33	57	81	9
15	39	63	87	15
03	27	51	75	3
19	43	67	91	19
07	31	55	79	7
23	47	71	95	23
11	35	59	83	11
14	38	62	86	14
02	26	50	74	2
18	42	66	90	18
06	30	54	78	6
22	46	70	94	22
10	34	58	82	10
16	40	64	88	16
04	28	52	76	4
20	44	68	92	20
08	32	56	80	8
24	48	72	96	24

TABLE B — D2						
DT TIME SLOTS					ASSOC. TRAF. NO.	FAR-END CHANNEL
001-024	025-048	049-072	073-096	097-120		
003	027	051	075	097		1
015	039	063	087	111		2
009	033	057	081	105		3
021	045	069	093	117		4
005	029	053	077	101		5
017	041	065	089	113		6
011	035	059	083	107		7
023	047	071	095	119		8
007	031	055	079	103		9
019	043	067	091	115		10
013	037	061	085	109		11
001	025	049	073	097		12
002	026	050	074	098		13
014	038	062	086	110		14
008	032	056	080	104		15
020	044	068	092	116		16
004	028	052	076	100		17
016	040	064	088	112		18
010	034	058	082	106		19
022	046	070	094	118		20
006	030	054	078	102		21
018	042	066	090	114		22
012	036	060	084	108		23
024	048	072	096	120		24

COMPLETE RC WORKSHEET FORM 200 TO ADD NEW TRUNKS TO TSG (D2 CHANNEL BANK)

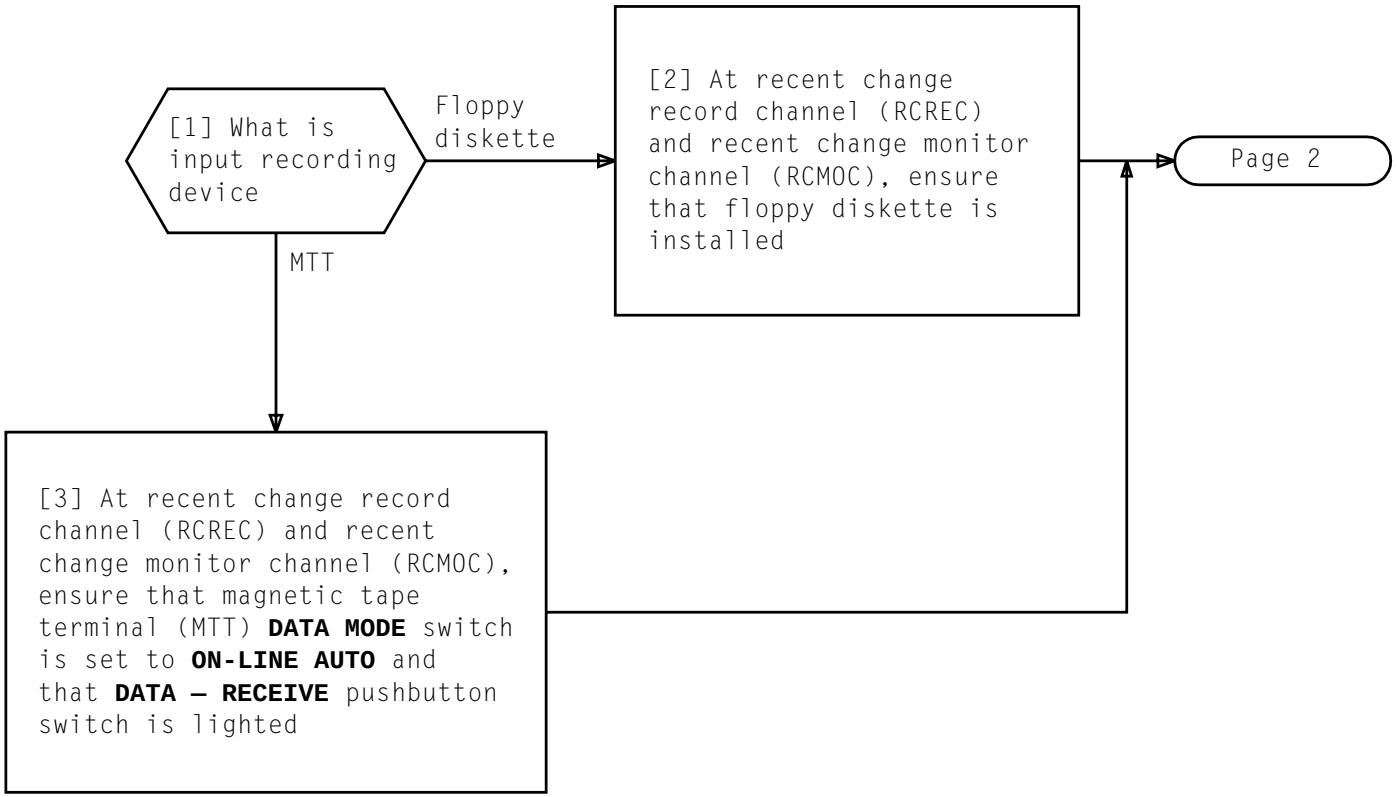

ENTER TRUNK-TYPE RCDM INTO CURRENT TRANSLATIONS

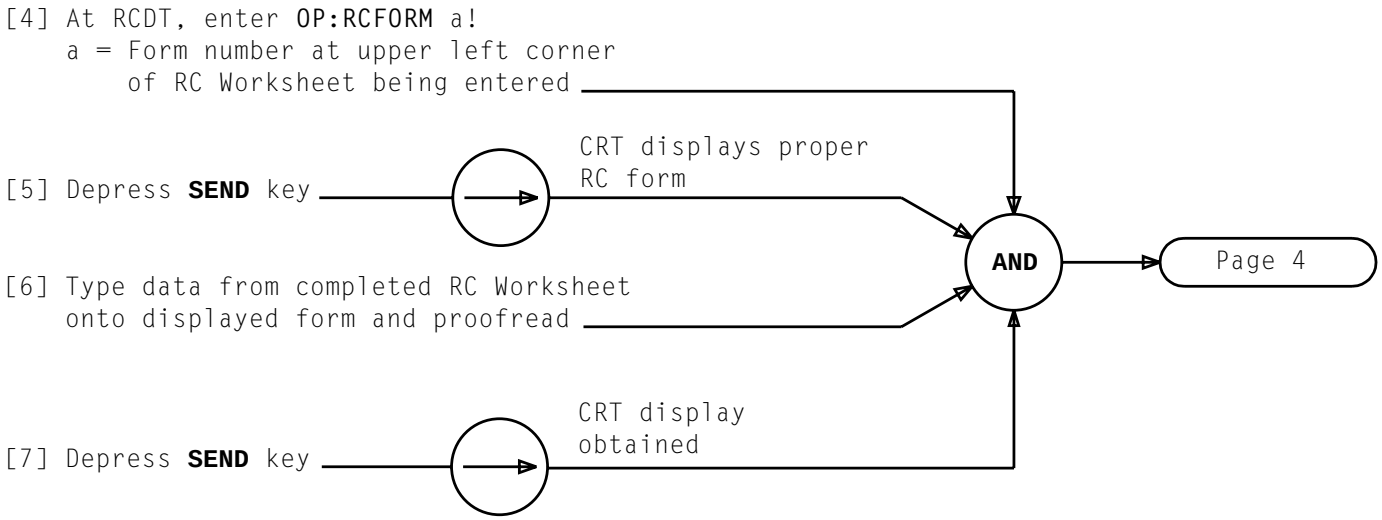

ENTER TRUNK-TYPE RCDM INTO CURRENT TRANSLATIONS

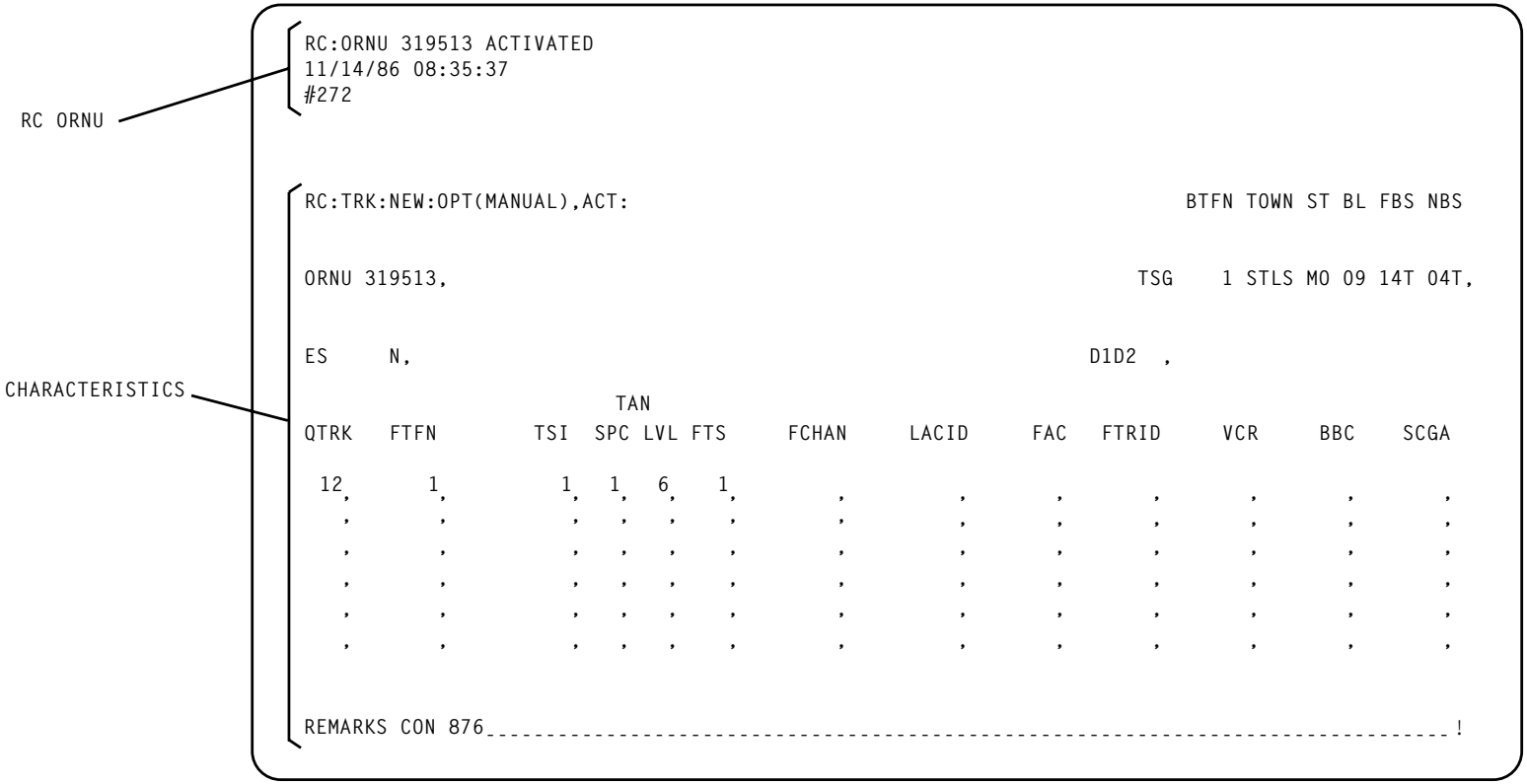

FIG. 1 — Sample CRT Display of RCDM Accepted for ACT State

ENTER TRUNK-TYPE RCDM INTO CURRENT TRANSLATIONS

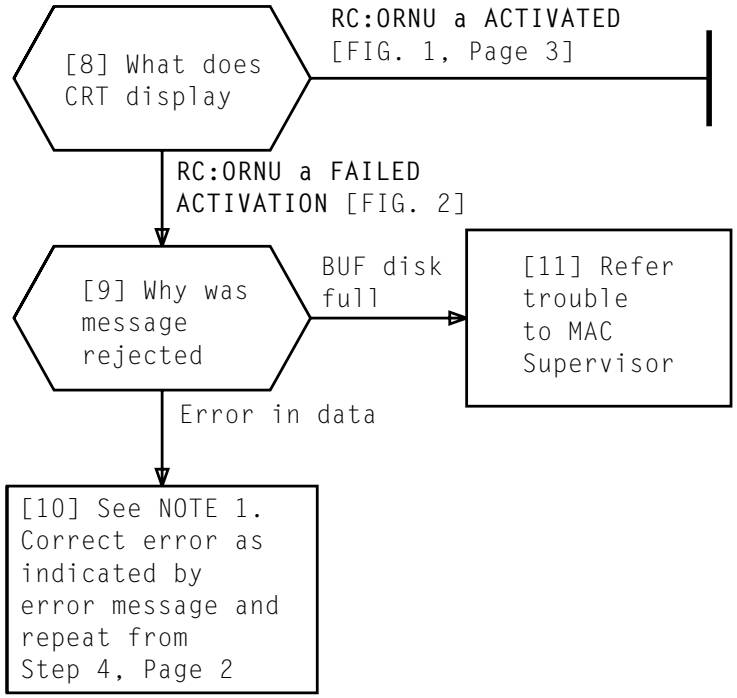


```
M 31 RC:ORNU a FAILED ACTIVATION:
     ERROR IN KEYWORD OF MESSAGE ORNU 319513
                                 D1D2 N,
```

FIG. 2 — Sample CRT Display of RCDM Rejected for ACT State

NOTE 1

If message is rejected because of error, CRT displays portion of input form ending with keyword that contained error

ENTER TRUNK-TYPE RCDM INTO CURRENT TRANSLATIONS

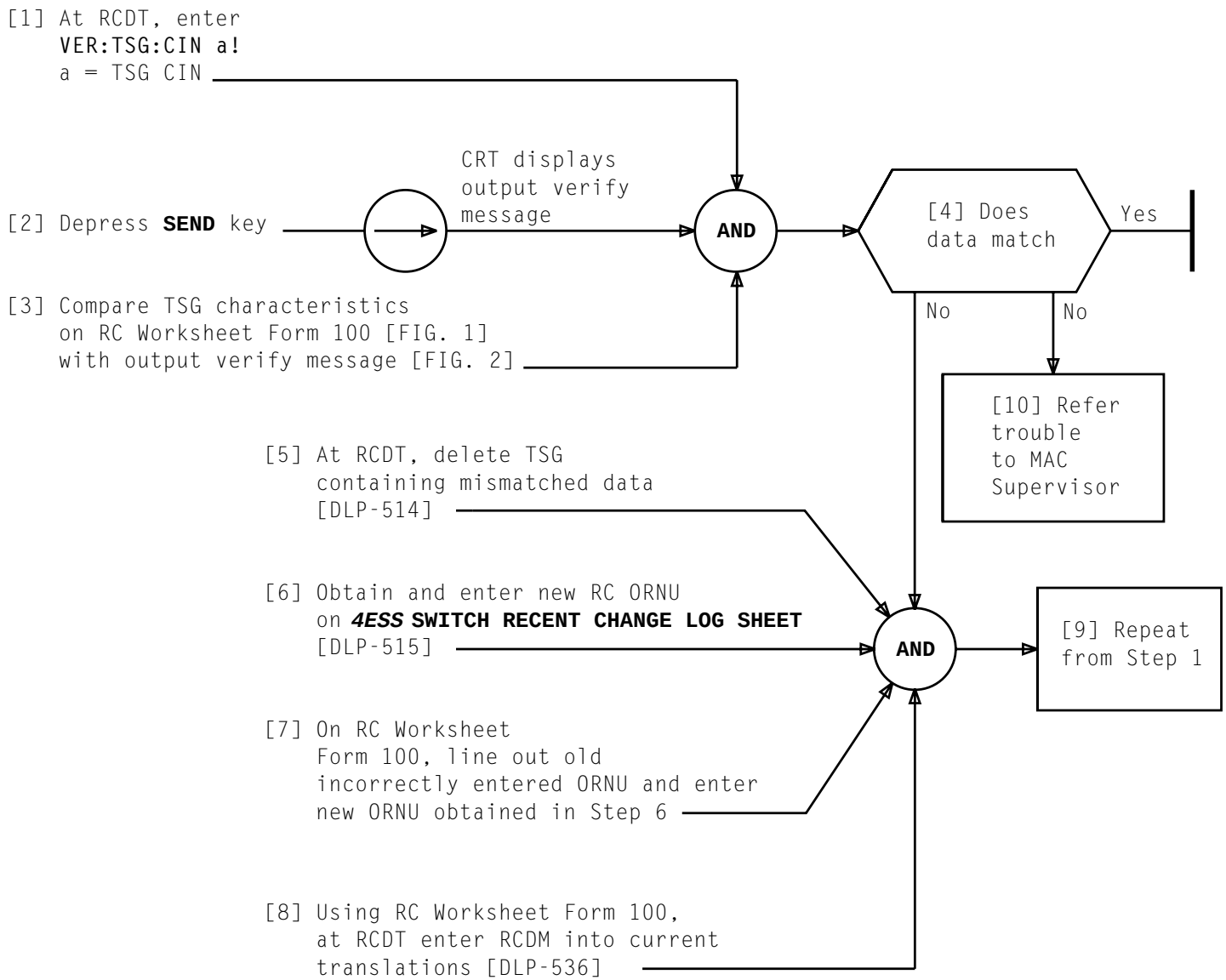

VERIFY CURRENT TRANSLATIONS DATA TO ESTABLISH 2W TSG

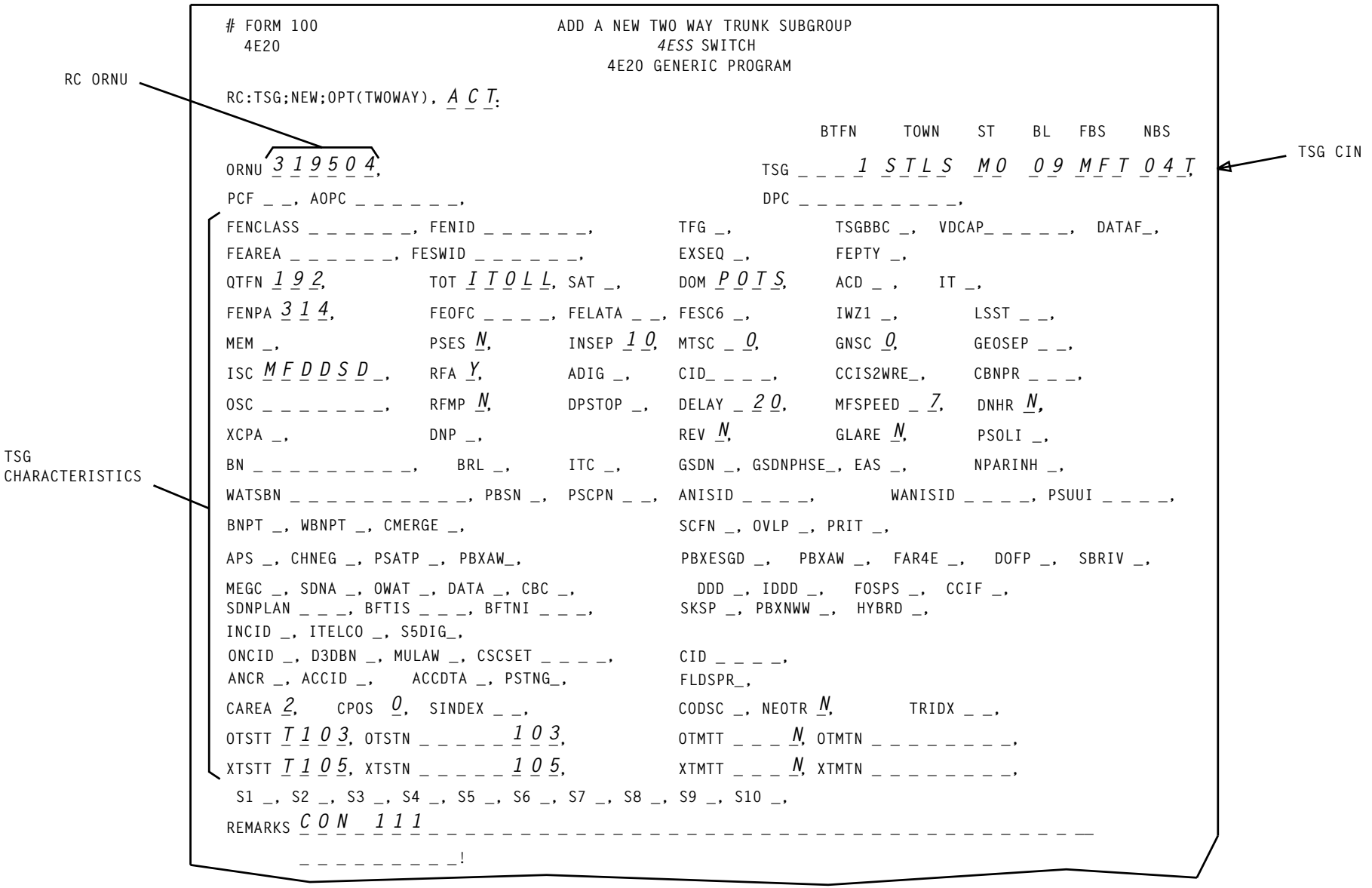

FIG. 1 — Sample of Partially Completed RC Worksheet Form 100 — 4E20 Generic Program

VERIFY CURRENT TRANSLATIONS DATA TO ESTABLISH 2W TSG

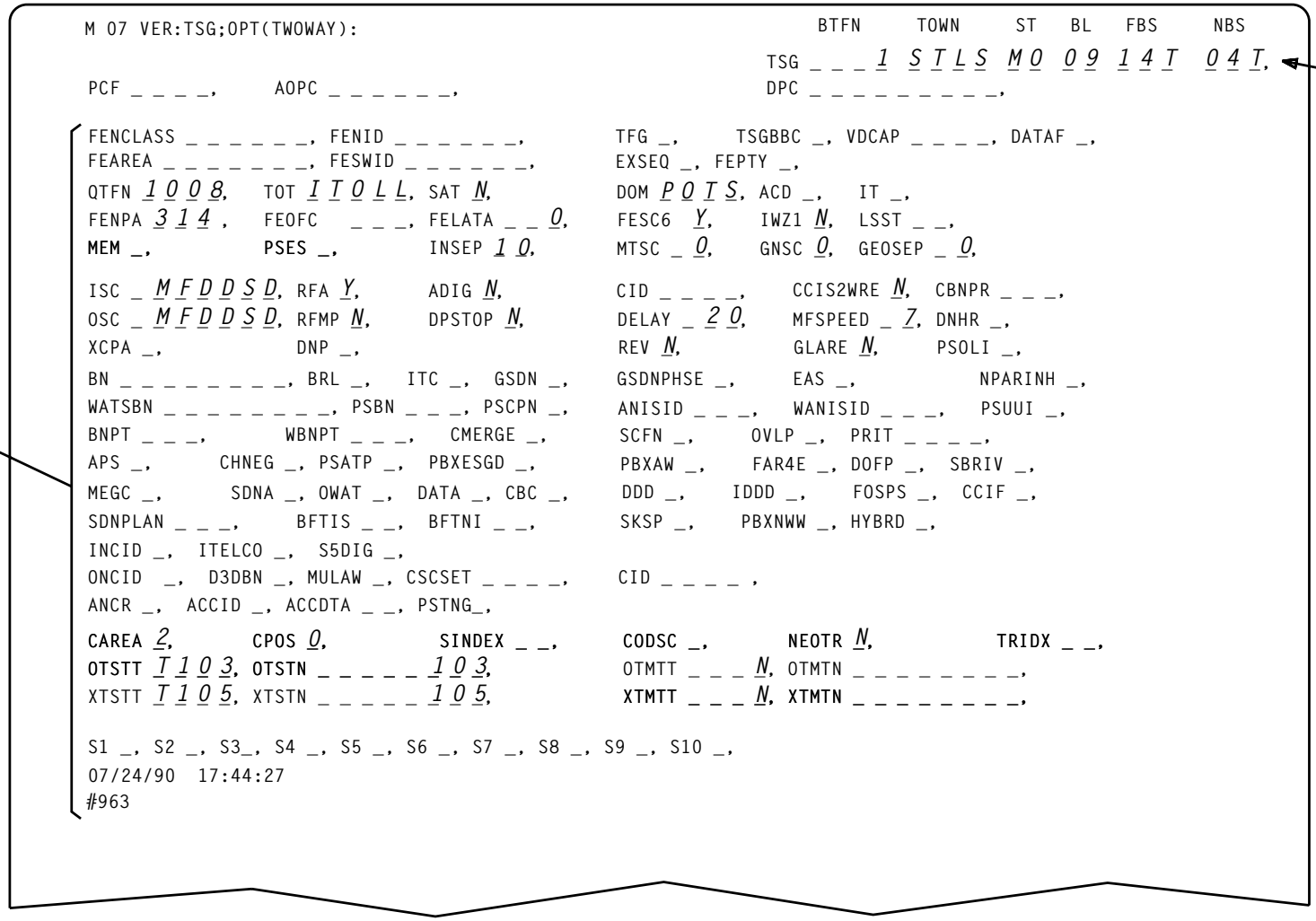

FIG. 2 — Sample CRT Display of Output Verify Message for 2W TSG

VERIFY CURRENT TRANSLATIONS DATA TO ESTABLISH 2W TSG

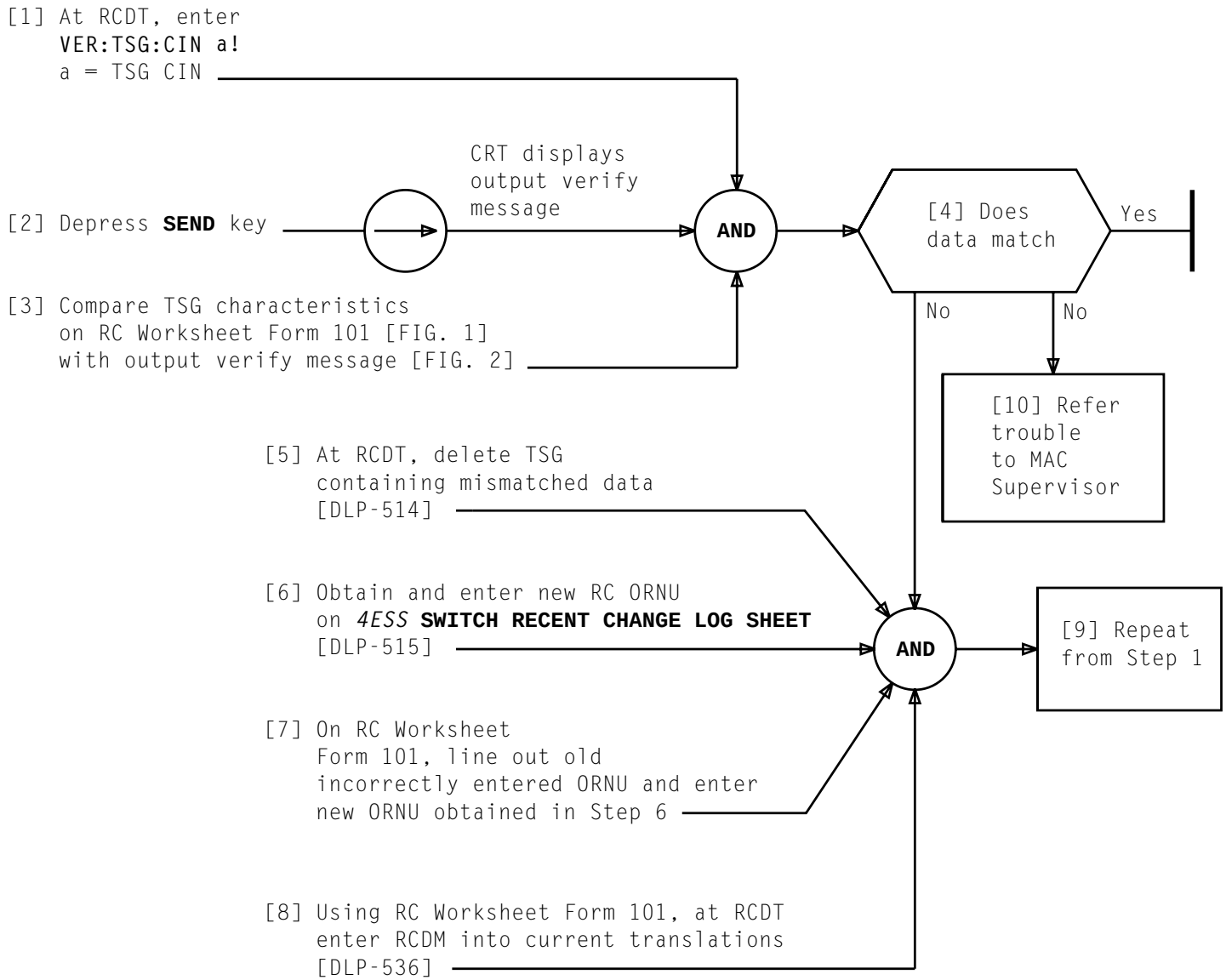

VERIFY CURRENT TRANSLATIONS DATA TO ESTABLISH 1WI TSG

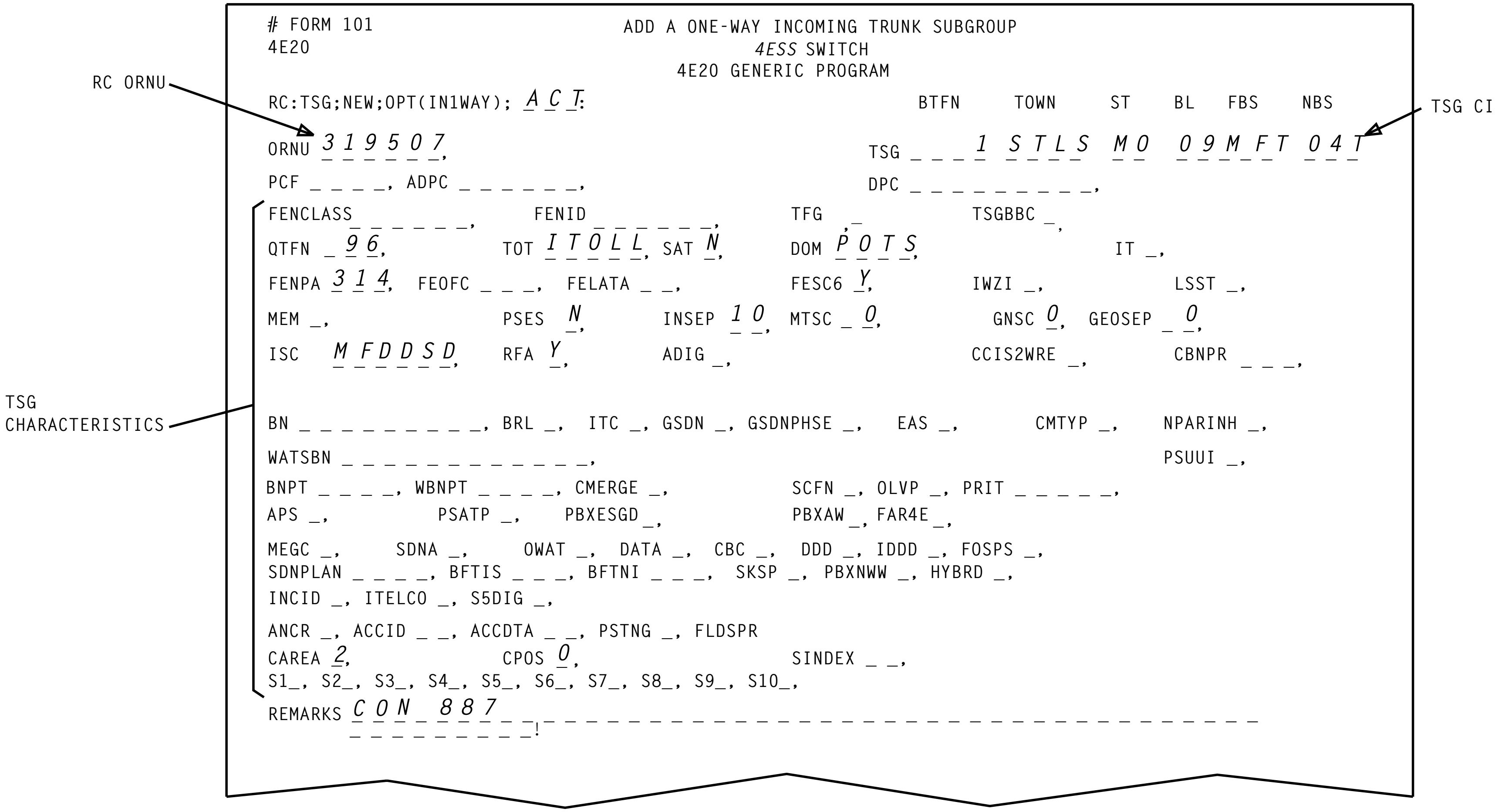

FIG. 1 — Sample of Partially Completed RC Worksheet Form 101 — 4E20 Generic Program

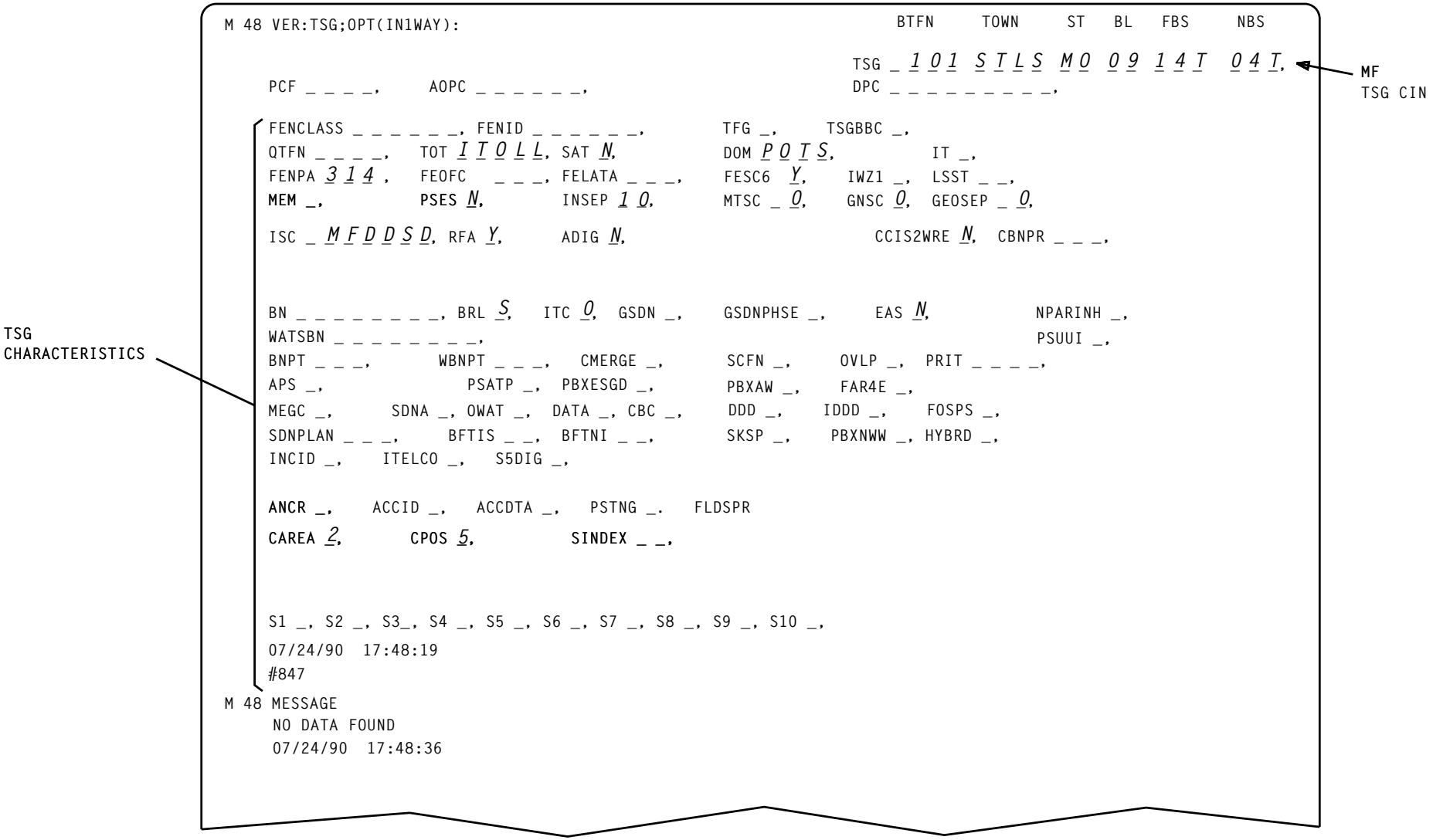

FIG. 2 — Sample CRT Display of Output Verify Message for 1WI TSG

VERIFY CURRENT TRANSLATIONS DATA TO ESTABLISH 1WI TSG

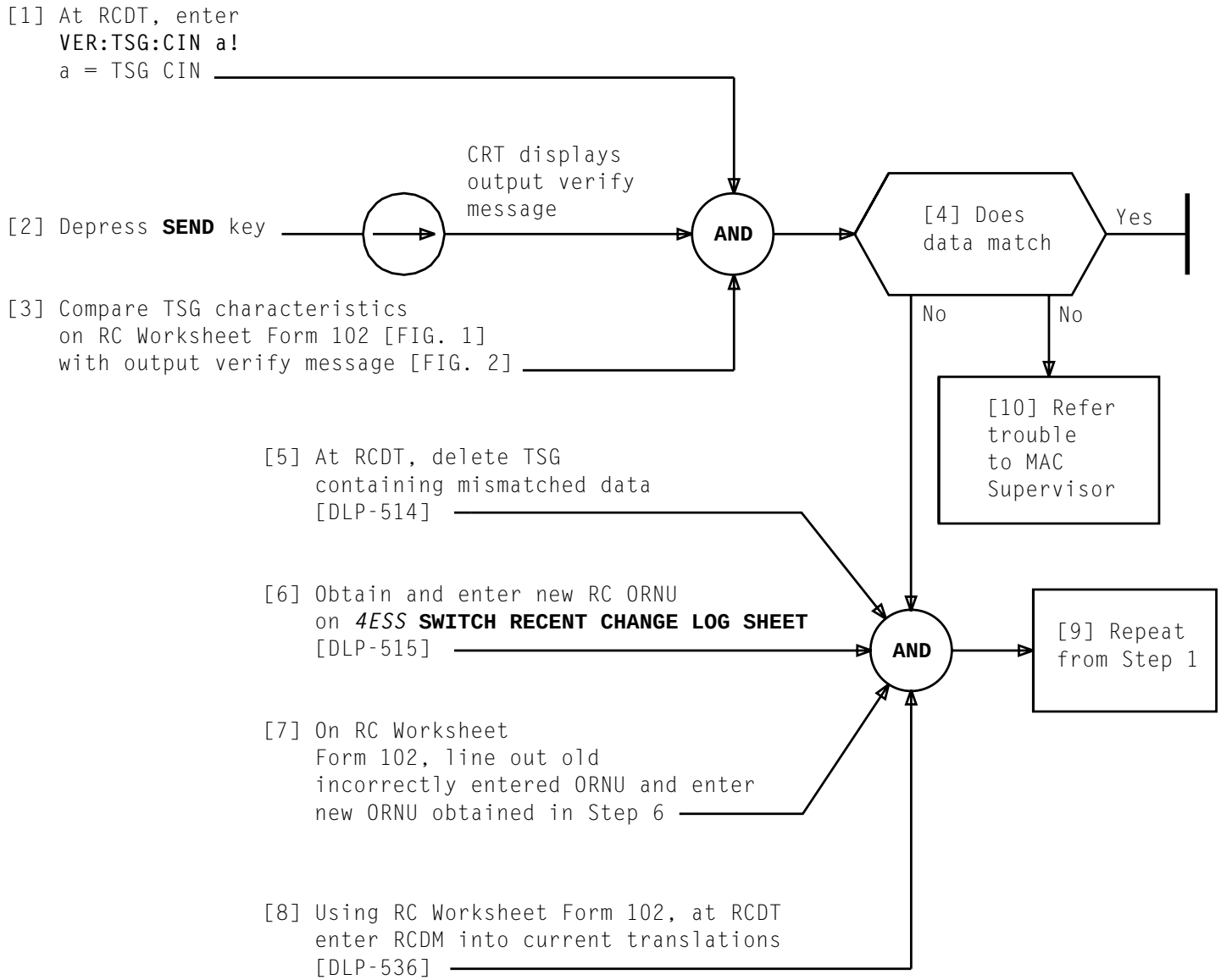

VERIFY CURRENT TRANSLATIONS DATA TO ESTABLISH 1WO TSG

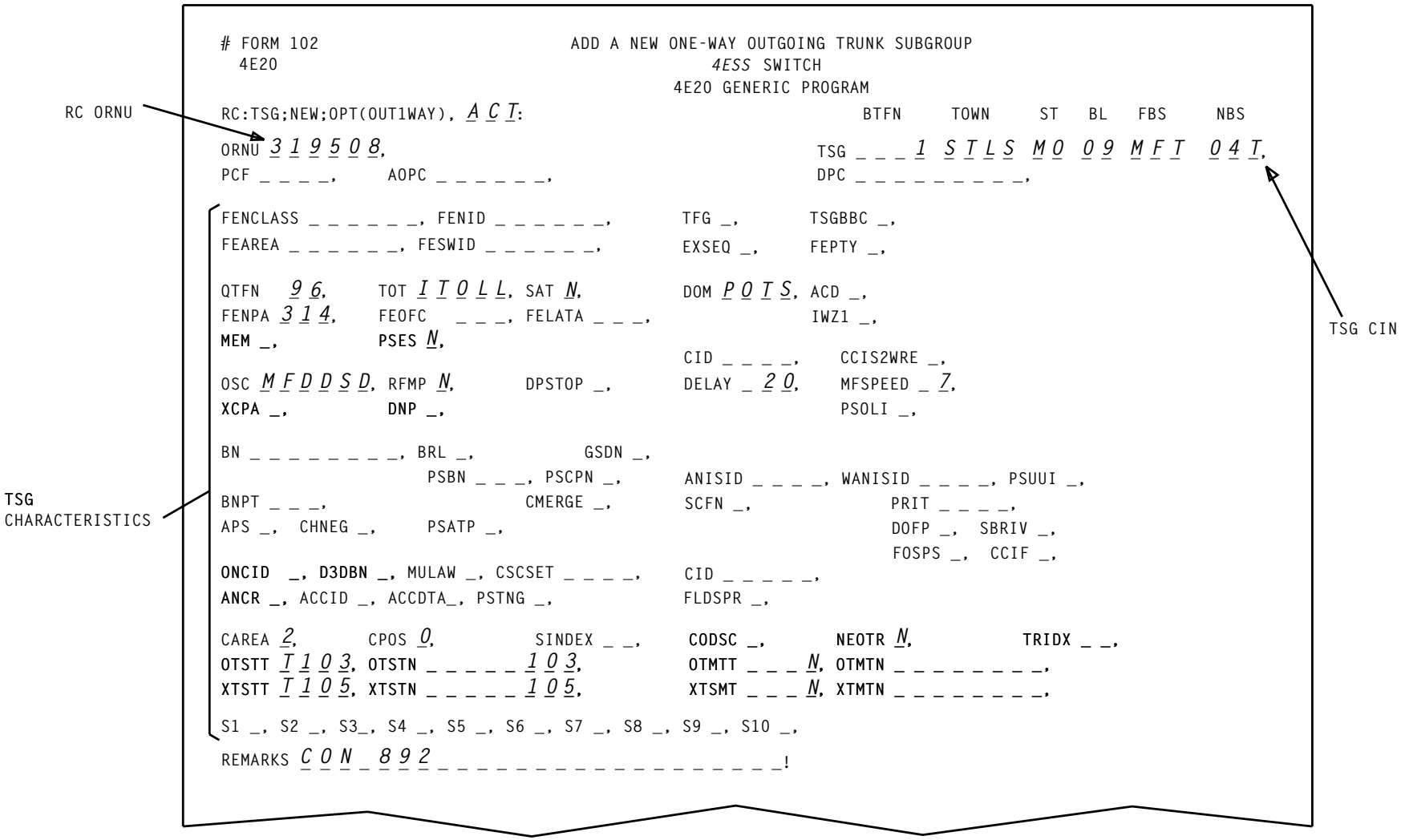

FIG. 1 — Sample of Partially Completed RC Worksheet Form 102 — 4E20 Generic Program

VERIFY CURRENT TRANSLATIONS DATA TO ESTABLISH 1WO TSG

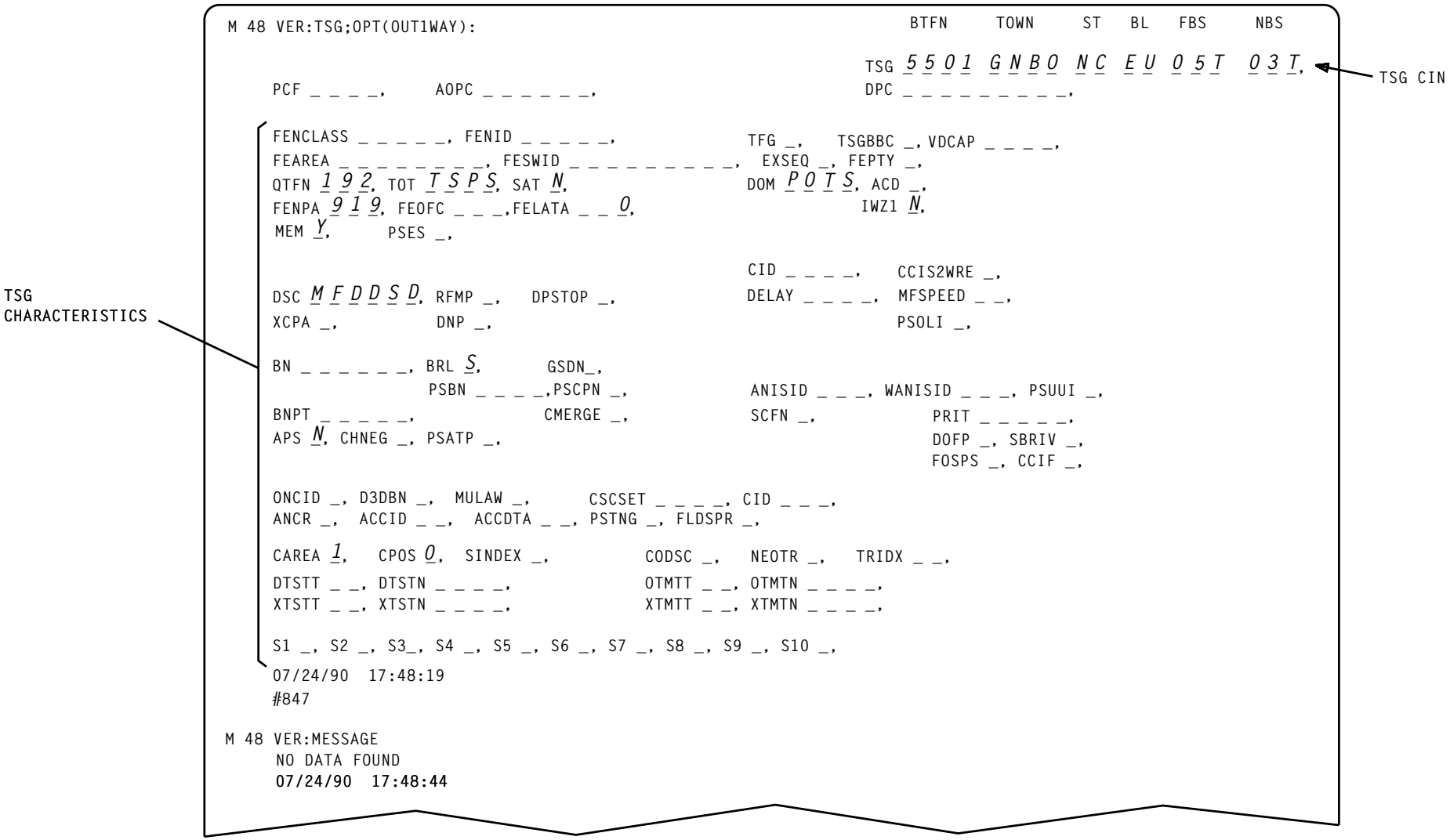

FIG. 2 — Sample CRT Display of Output Verify Message for 1W0 TSG

VERIFY CURRENT TRANSLATIONS DATA TO ESTABLISH 1WO TSG

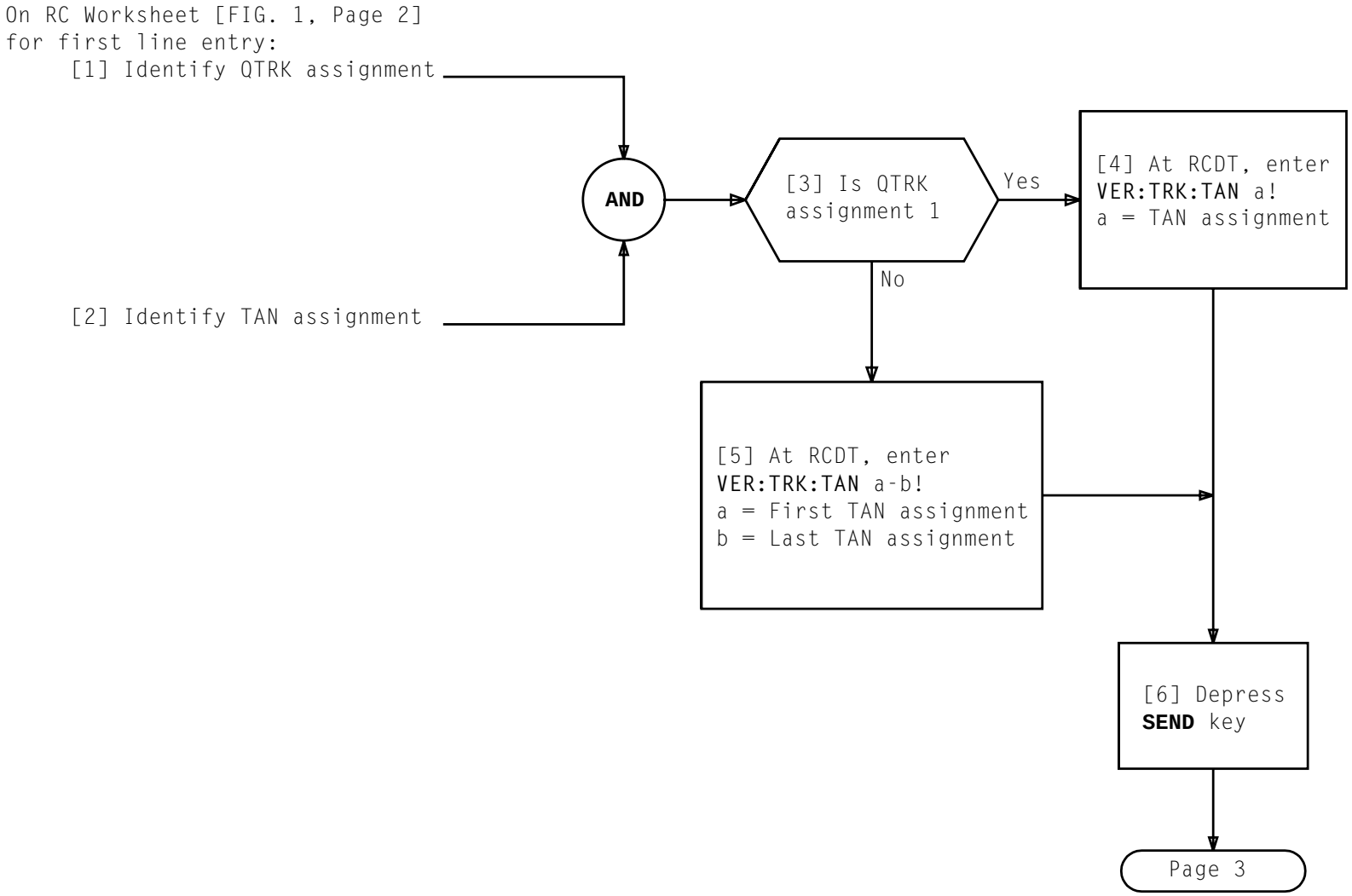

VERIFY CURRENT TRANSLATIONS DATA TO ADD DOMESTIC NON-CCS TRUNKS (NO ECHO SUPPRESSORS)

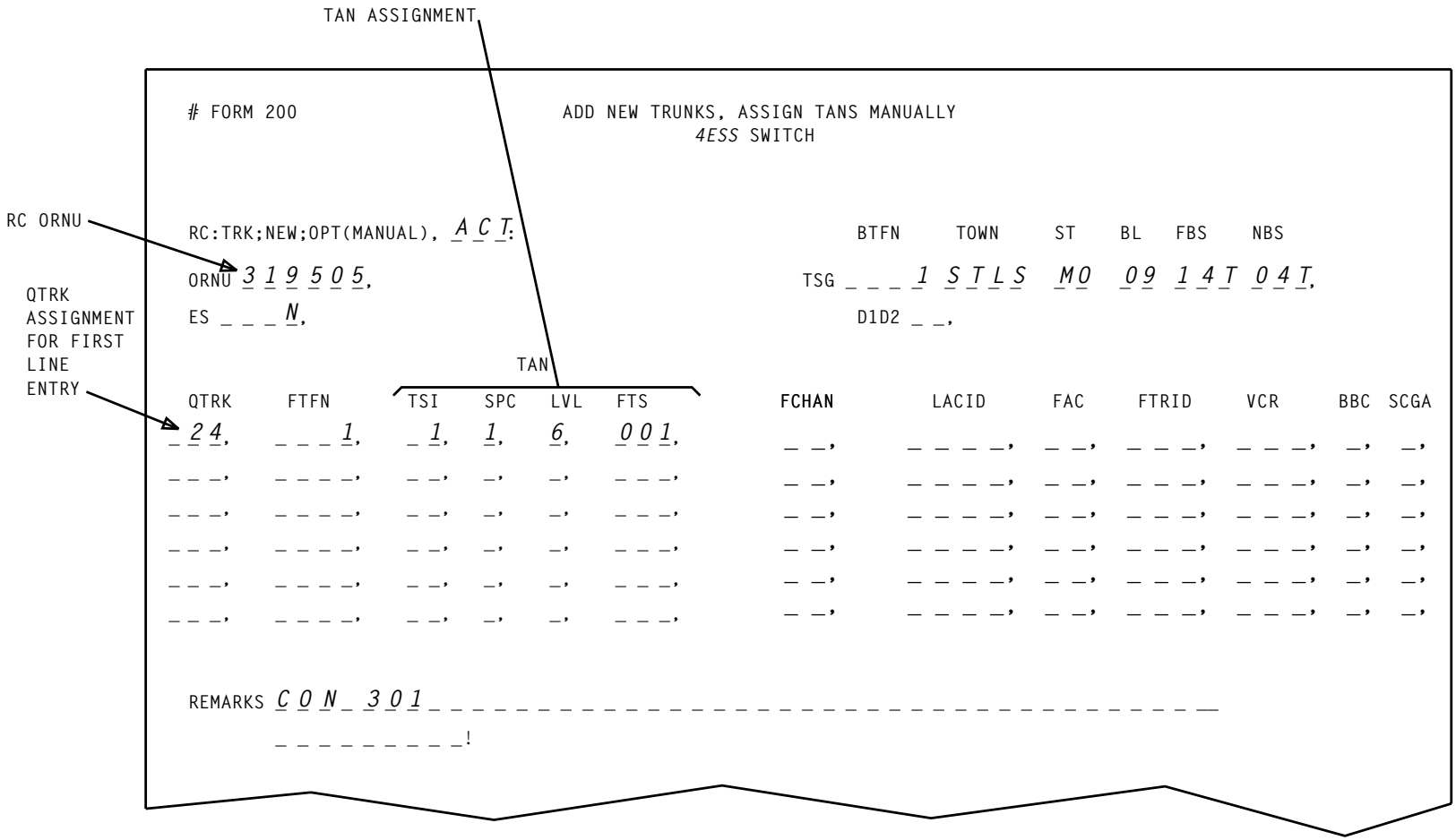

FIG. 1 — Sample of Completed RC Worksheet Form 200

VERIFY CURRENT TRANSLATIONS DATA TO ADD DOMESTIC NON-CCS TRUNKS (NO ECHO SUPPRESSORS)

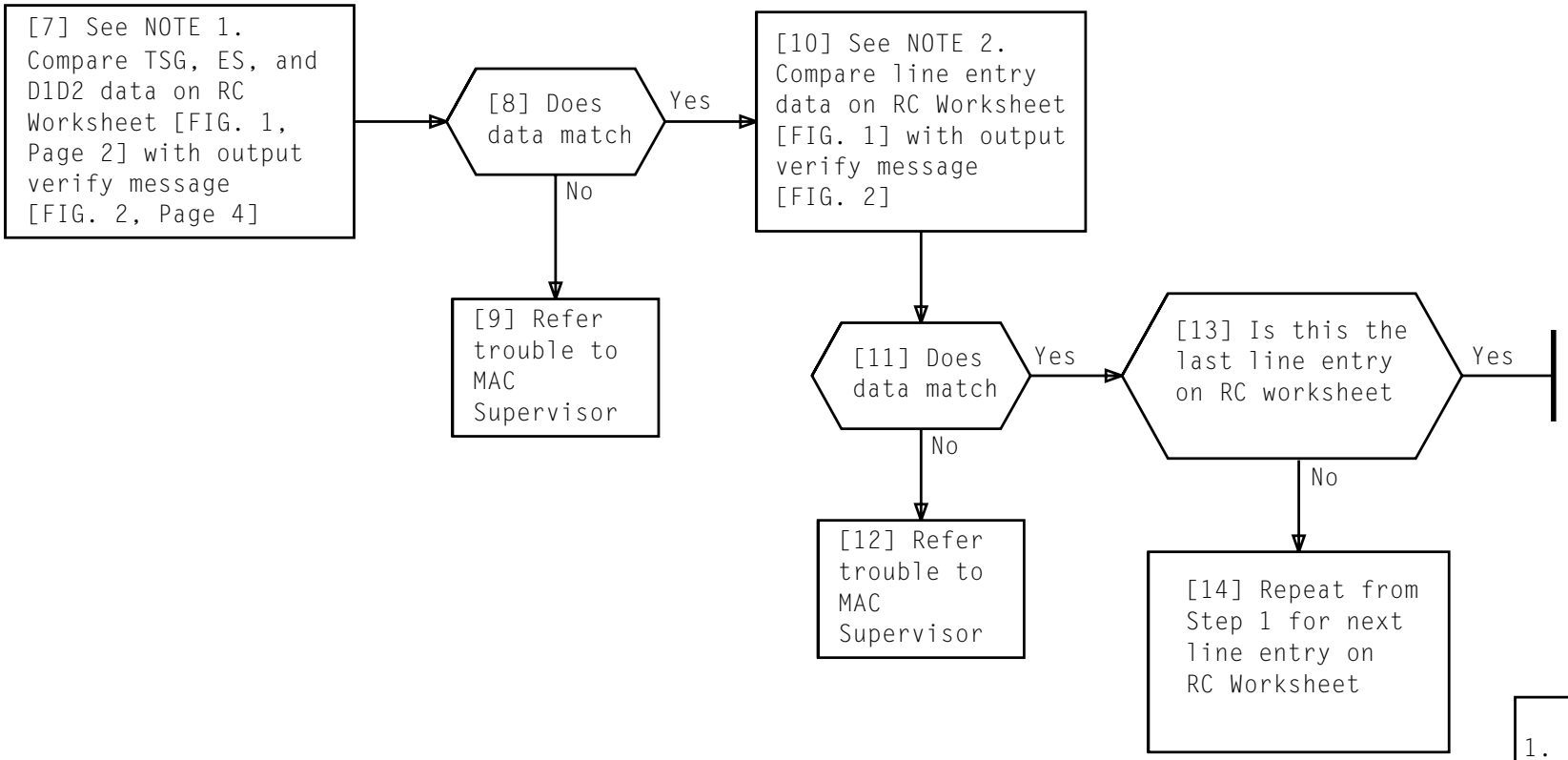

NOTES

1. If **D1D2** entry on RC Worksheet [FIG. 1] is blank, **D1D2** entry on output verify message [FIG. 2] will be N
2. If **FCHAN** entry on RC Worksheet [FIG. 1] is blank, **FCHAN** entry on output verify message [FIG. 2] will be 0 (zero)

VERIFY CURRENT TRANSLATIONS DATA TO ADD DOMESTIC NON-CCS TRUNKS (NO ECHO SUPPRESSORS)

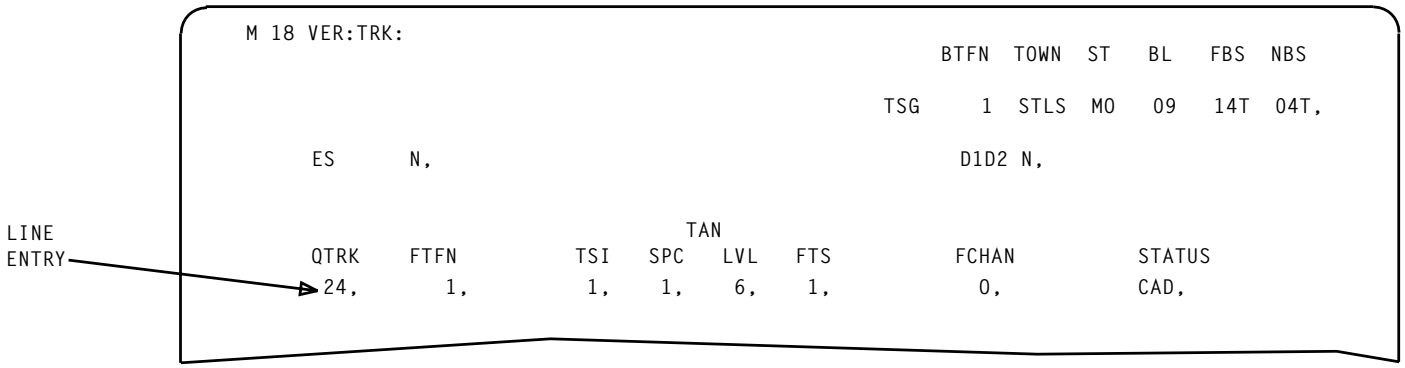

FIG. 2 – Sample CRT Display of Output Verify Message

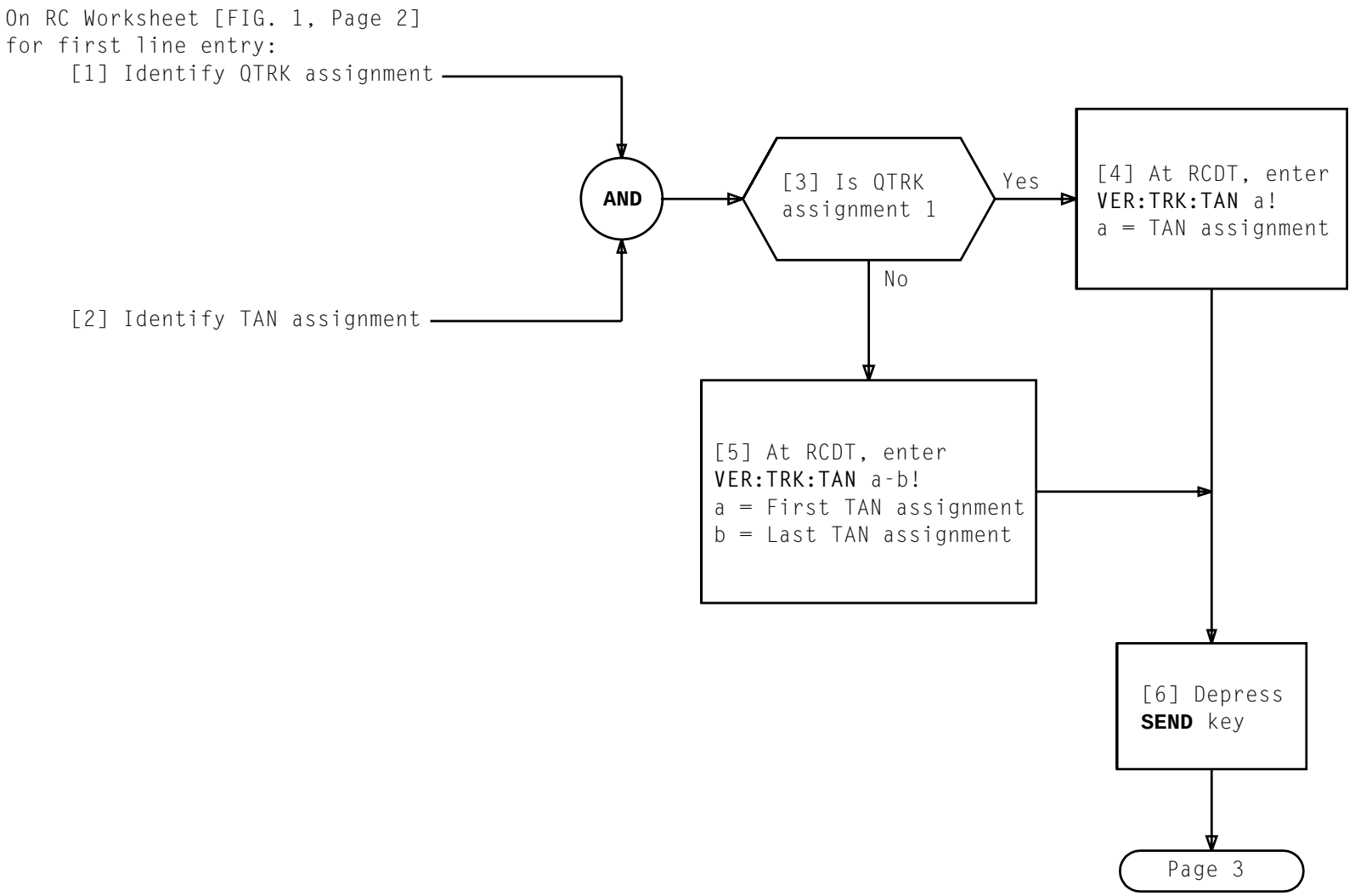

VERIFY CURRENT TRANSLATIONS DATA TO ADD DOMESTIC NON-CCS TRUNKS (WITH ECHO SUPPRESSORS)

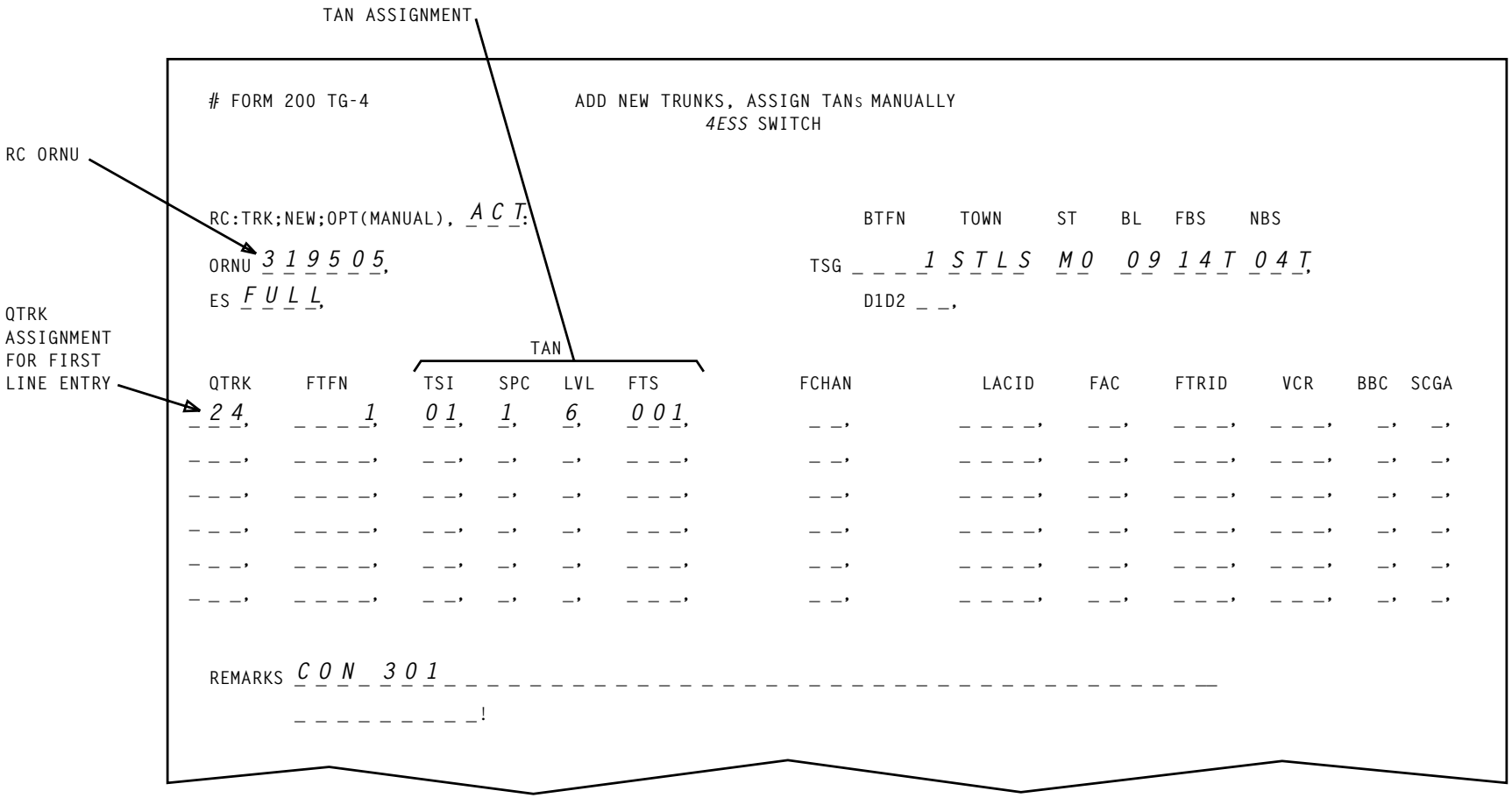

FIG. 1 — Sample of Completed RC Worksheet Form 200

VERIFY CURRENT TRANSLATIONS DATA TO ADD DOMESTIC NON-CCS TRUNKS (WITH ECHO SUPPRESSORS)

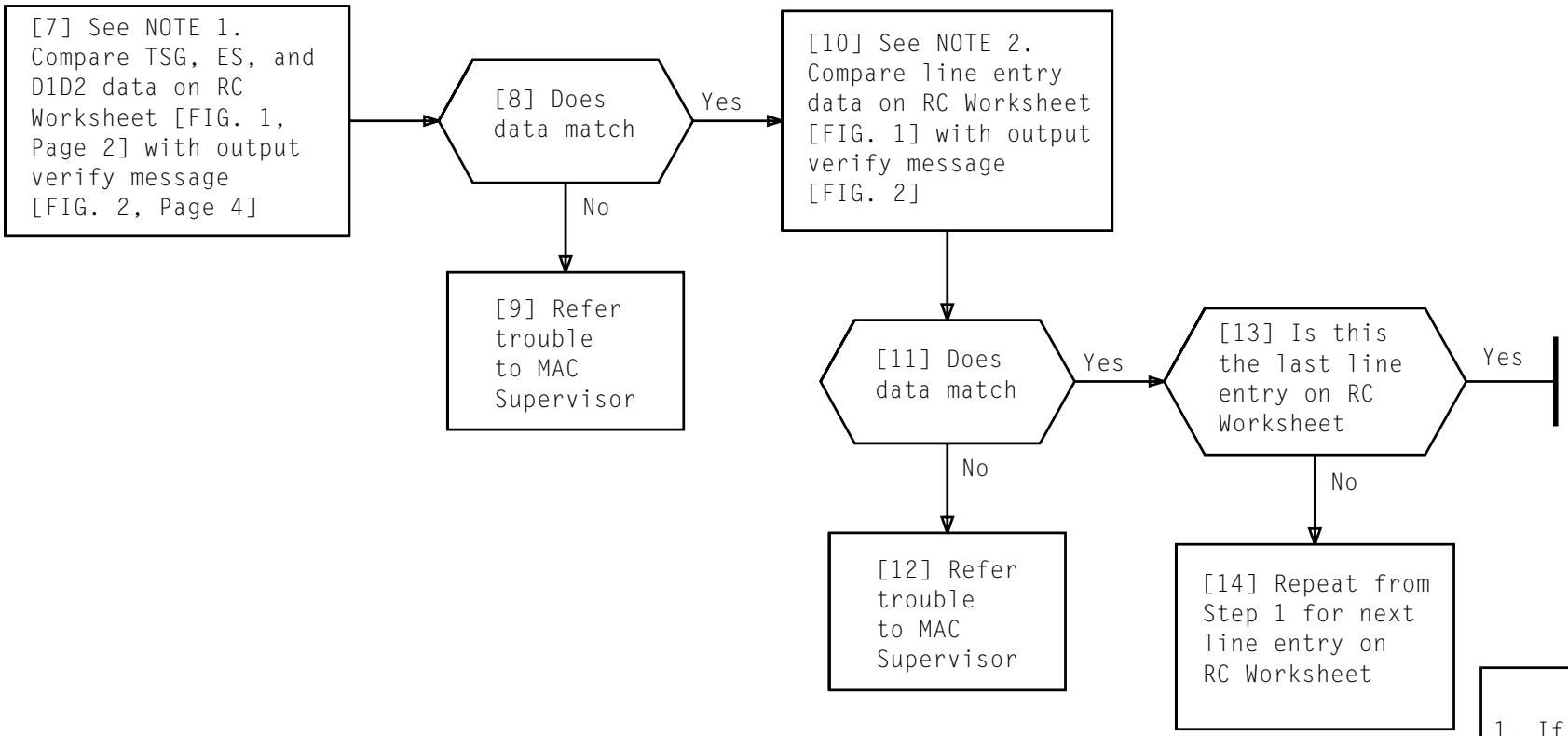

NOTES

1. If **D1D2** entry on RC Worksheet [FIG. 1] is blank, **D1D2** entry on output verify message [FIG. 2] will be N
2. If **FCHAN** entry on RC Worksheet [FIG. 1] is blank, **FCHAN** entry on output verify message[FIG. 2] will be 0 (zero)

VERIFY CURRENT TRANSLATIONS DATA TO ADD DOMESTIC NON-CCS TRUNKS (WITH ECHO SUPPRESSORS)

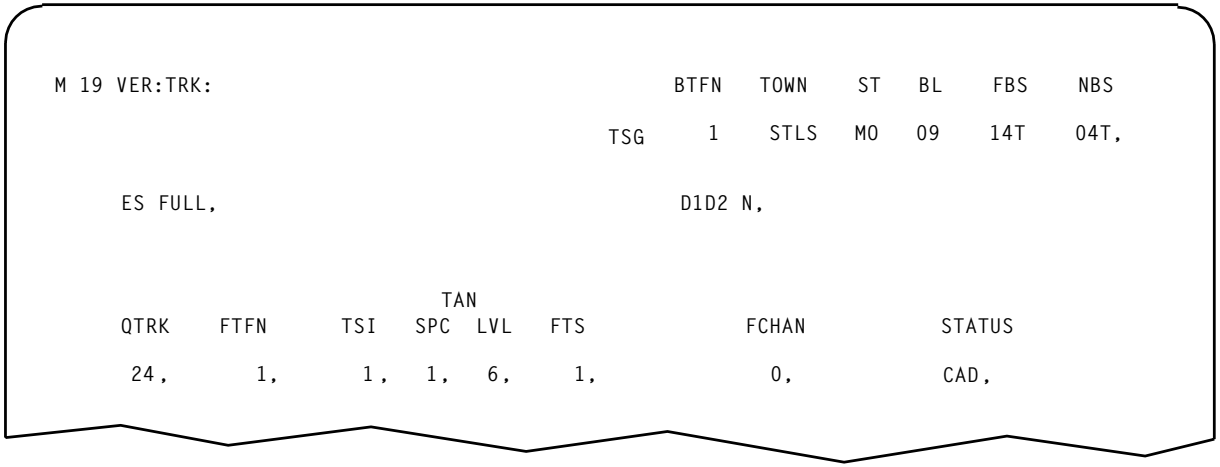

FIG. 2 — Sample CRT Display of Output Verify Message

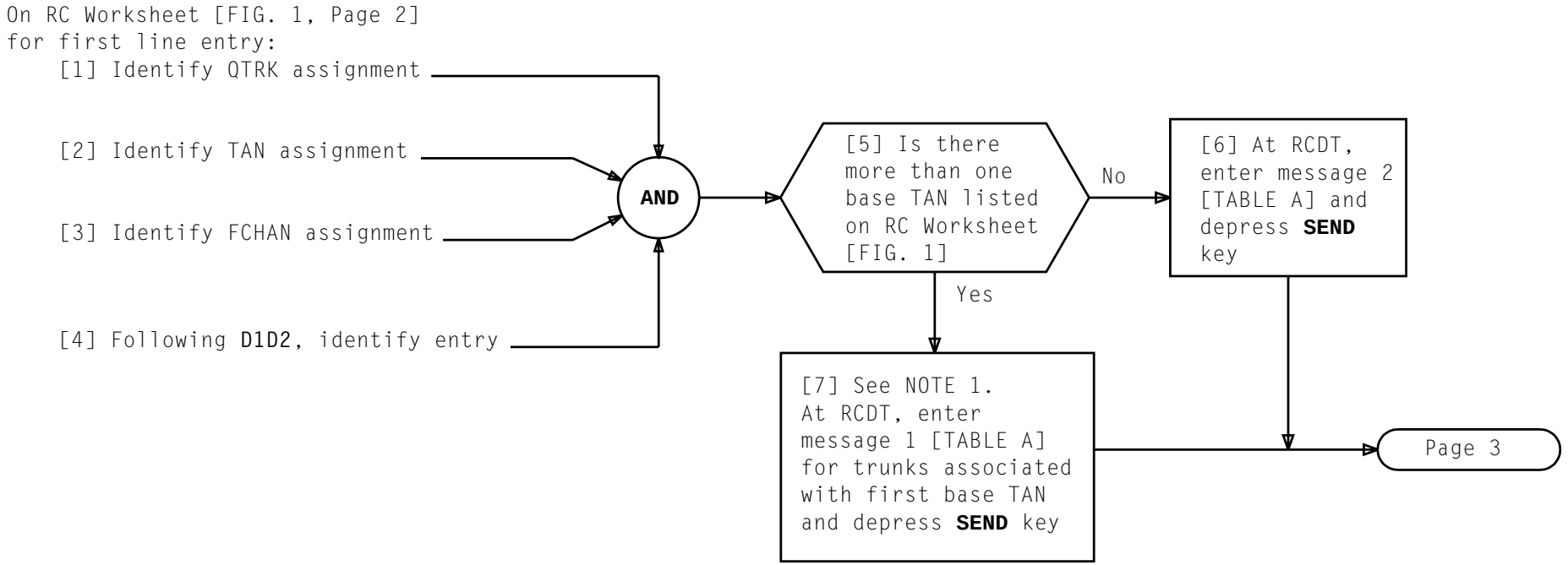

TABLE A

	INPUT VERIFY MESSAGES	VARIABLES
1	VER:TRK:TSI a,SPC b,LVL c,FTS d,FCHAN e-f,Dg!	a = TSI frame number (0 to 63) b = Switching permuting circuit (0 or 1) c = Switch level (0 to 6) d = First time slot number (1 to 120) e = First far-end channel number (1 to 24) f = Last far-end channel number (2 to 24) g = Digroup type (D1 or D2)
	Example: VER:TRK:TSI 1,SPC 0,LVL 4,FTS 6,FCHAN 1-24,D1!	
2	VER:TRK:TSI a,SPC b,LVL c,FTS d,FCHAN e,Dg!	
	Example: VER:TRK:TSI 1,SPC 0,LVL 4,FTS 6,FCHAN 1,D2!	

NOTE 1
All trunks assigned to the same base TAN may be verified with one input message. However, trunk quantity may not exceed 24

VERIFY CURRENT TRANSLATIONS DATA TO ADD NON-CCS TRUNKS ASSIGNED TO FAR-END D1 OR D2 CHANNEL BANKS

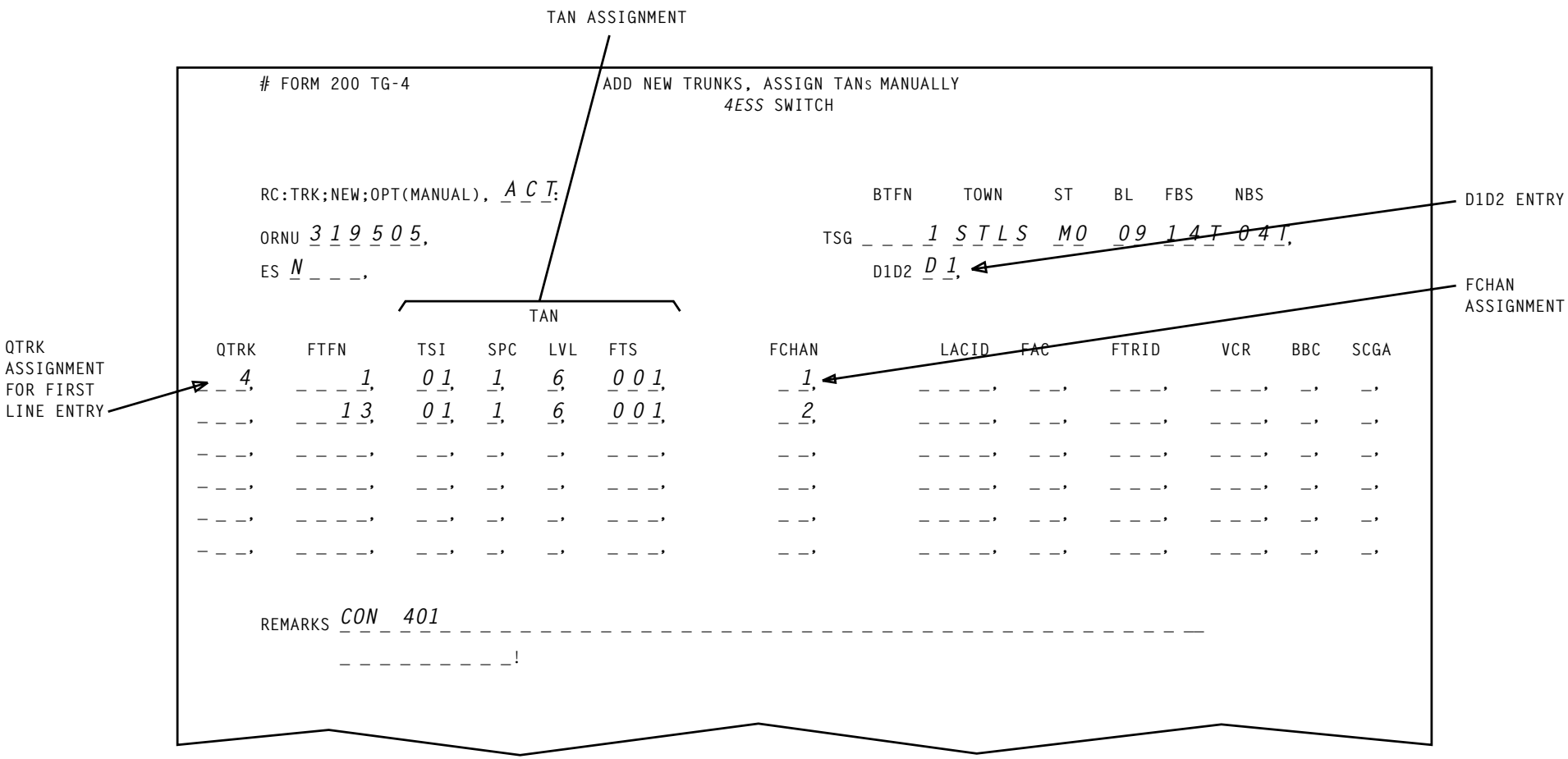

FIG. 1 — Sample of Completed RC Worksheet Form 200 — One Base Tan Assignment

VERIFY CURRENT TRANSLATIONS DATA TO ADD NON-CCS TRUNKS ASSIGNED TO FAR-END D1 OR D2 CHANNEL BANKS

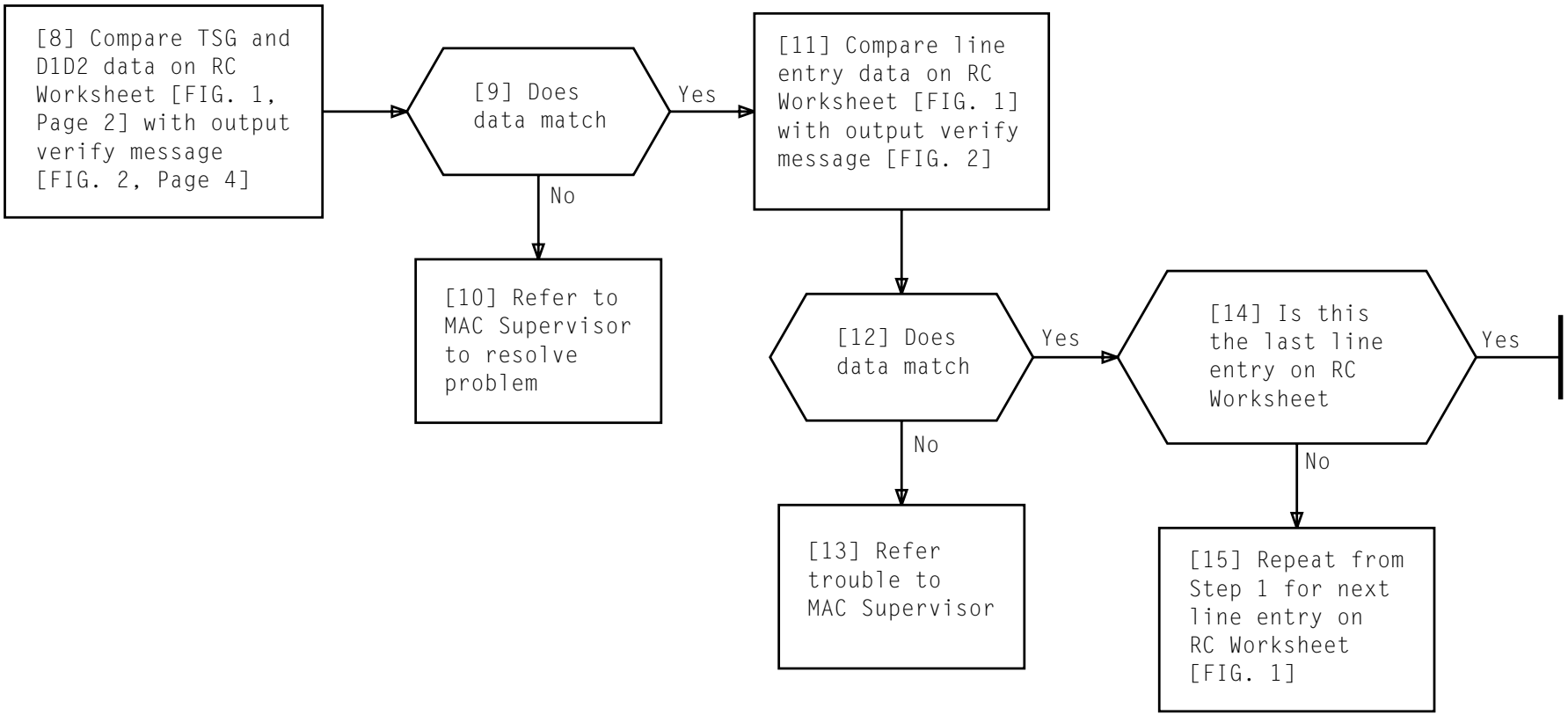

VERIFY CURRENT TRANSLATIONS DATA TO ADD NON-CCS TRUNKS ASSIGNED TO FAR-END D1 OR D2 CHANNEL BANKS

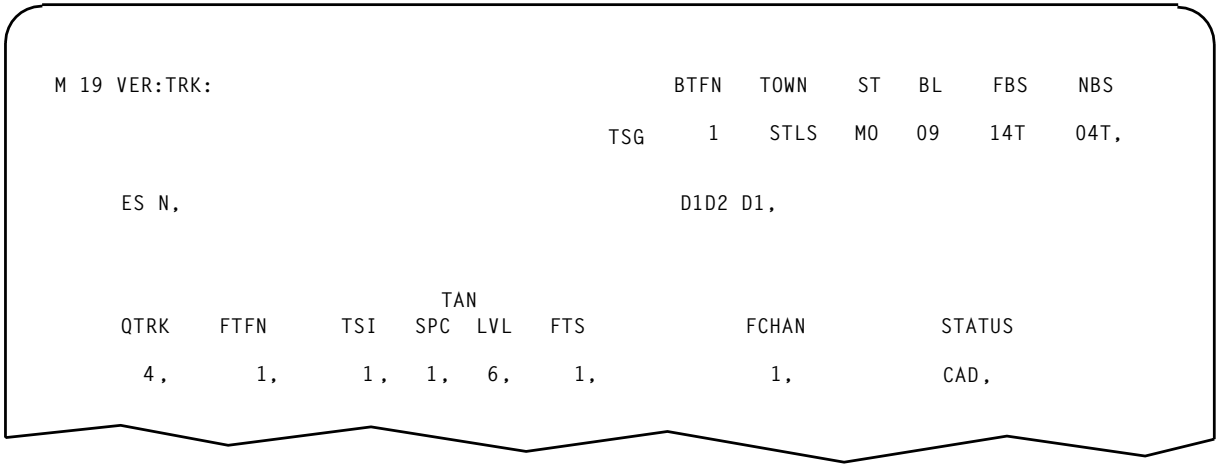

```
M 19 VER:TRK:                                    BTFN   TOWN    ST   BL    FBS    NBS
                                          TSG     1    STLS   MO   09    14T    04T,

     ES N,                                       D1D2 D1,


                              TAN
     QTRK    FTFN      TSI   SPC  LVL   FTS            FCHAN          STATUS

       4,       1,       1,   1,   6,     1,             1,           CAD,
```

FIG. 2 — Sample CRT Display of Output Verify Message

At CMS channel:

[1] Enter CMS code **350**

[2] Depress **S/R** key

CRT displays CMS Form 350

[3] Enter CMS code **351**

AND

Cursor moves to line **351** on displayed CMS Form 350

[4] Depress **S/R** key

[5] On CMS Form 350 [FIG. 1] following **ORDER STATUS:**, change MAC circuit order status to *CPD*

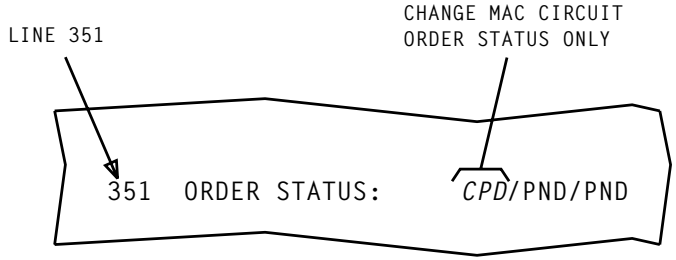

FIG. 1 — Sample CRT Display of CMS Form 350 (Partial)

UPDATE MAC CIRCUIT ORDER STATUS IN CMS TO CPD

1. GENERAL

1.1 A reinitialization file will be established for two basic purposes:

(a) To contain hard copies of recent change data messages (RCDMs) which have been advanced to buffer state, canceled in buffer state and activated since the last tape dump.

(b) To contain detailed RCDM contents for use in the event a rollback is required.

1.2 In addition, the reinitialization file will be used in an audit function by containing ORNUs to compare with those appearing on a rollback area printout which contains a listing of all ORNUs in the rollback area and the form numbers.

2. PROCEDURE

2.1 Obtain a ring binder and insert a cardboard divider to separate the contents into two sections.

2.2 The section forward of the divider will contain hard copy printouts of all RCDMs processed since the last tape dump. These printouts will be filed in the order that the RCDMs were entered into the *4ESS* switch translations.

2.3 The section behind the divider will contain printouts of RCDMs still in the rollback area but entered prior to the last tape dump.

2.4 Each time a tape dump occurs, the printouts behind the divider are removed from the file and the divider is moved to the front of the file. Thus, a new section is provided for filing the hard copies obtained from processing RCDMs since the last tape dump.

2.5 The reinitialization file will contain printouts of RCDMs in the BUFFER state and printouts of RCDMs accepted in the CURRENT state.

2.6 It is recommended that critical RCDMs such as unit-type recent changes be tagged with a red flag to alert MAC personnel when evaluating reentry of RCDMs in the event of rollback.

ESTABLISH REINITIALIZATION FILE

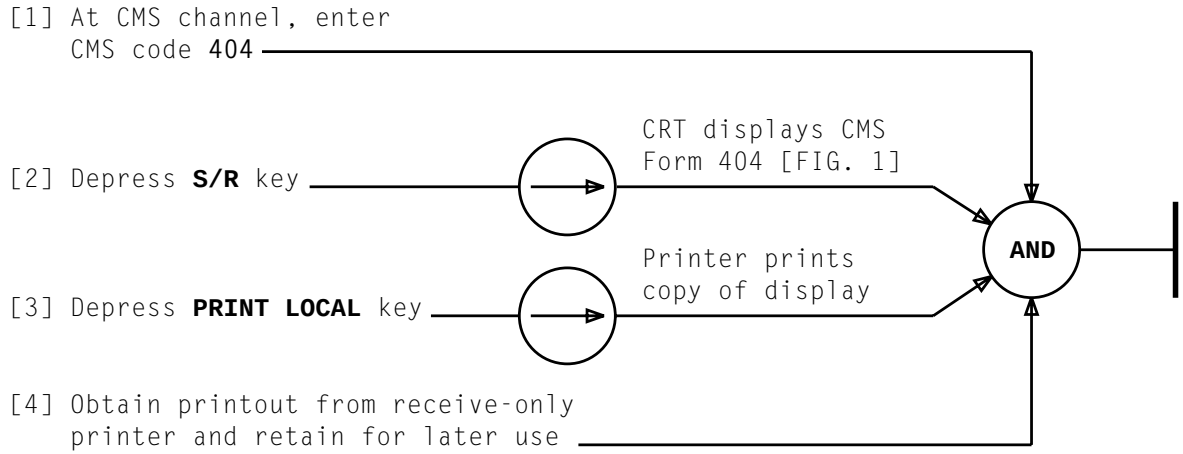


```
MESSAGES:
CON/ITEM/MEMBER: 898/01 /01)M   1STLSM00906T04T    STATUS: PND/PND/PND
                                                   MAC 01/CKT/DET
404 TRANSLATION DATA
 -------------------- CIRCUIT ---------------------------------------
 430 CLCID:   1 IH21IT        KSCYM00904T MM STLSM00906T
     CIN  :   1STLSM00906T04T
     CONTROL: /                              CO  RESP- TOC/TEC:22/50
     OWNERSHIP:LL                            MTC RESP- TOC/TEC:22/50
     ORIGINAL CLCID: (ONLY APPLIES TO NAME CHANGE)

 431 TAN: 100A078  CCIS TERMINAL:     /       BAND:        LABEL:

 432 ABBREVIATED ORDER CODE:                  FE CHANNEL BANK:

 -------------------- FACILITY --------------------------------------
 433 OUTGOING FAX:    1     A    1 KSCYM00904T STLSM00906T

 ------------------ CIRCUIT ORDER -----------------------------------
 434 WORK DATE:  /    TEST DATE:  /    DUE DATE:11/15
 435 CAROT TESTABLE? N                 CAROT TESTS PASSED?
```

FACILITY DESIGNATOR

FIG. 1 — Sample CMS 404 Display

OBTAIN PRINTOUT OF CMS 404 DISPLAY

[1] On RC Worksheet, identify far-end office CLLI code [FIG. 1]

On *4ESS* **SWITCH FACILITY ASSIGNMENT RECORD** [FIG. 2] or equivalent local form:

[2] Under column heading **FACILITY,** identify far-end office facility

AND

[3] Under column heading **CARTS WORKSHEET NO.,** identify CARTS Worksheet page number associated with identified facility

FORM 200 ADD NEW TRUNKS, ASSIGN TANS MANUALLY
4ESS SWITCH

11-CHARACTER FAR-END CLLI CODE

RC:TRK;NEW;OPT(MANUAL), A C T:

BTFN TOWN ST BL FBS NBS

ORNU 1 2 6 5 3 2,

TSG _ 1 2 5 O R L D F L M A 0 1 T _ _ _,

ES H A L F,

D1D2 _ _,

FIG. 1 — Sample of Completed RC Worksheet (Partial)

FACILITY

FAR-END OFFICE FACILITY

4ESS SWITCH FACILITY ASSIGNMENT RECORD DIGITAL

FACILITY	BASE TAN	DI-GROUP			SP	# OF D.P. TRUNKS	CARTS WORK-SHEET NO.
		BAY	UNIT	GROUP			
1A STLSMOPF74A	10-0-0-049	1020.02	6	3	00		395
2A STLSMOPF74A	11-0-2-073	1020.03	6	4	00		395
5A ORLDFLMA01TT	12-0-4-097	1020.04	6	5	01		396

CARTS WORKSHEET PAGE NUMBER ASSOCIATED WITH IDENTIFIED FACILITY

FIG. 2 — Sample of *4ESS* SWITCH FACILITY ASSIGNMENT RECORD — Digital (DT)

IDENTIFY CARTS WORKSHEET PAGE NUMBER ON *4ESS* SWITCH FACILITY ASSIGNMENT RECORD FOR ACTIVATED CON

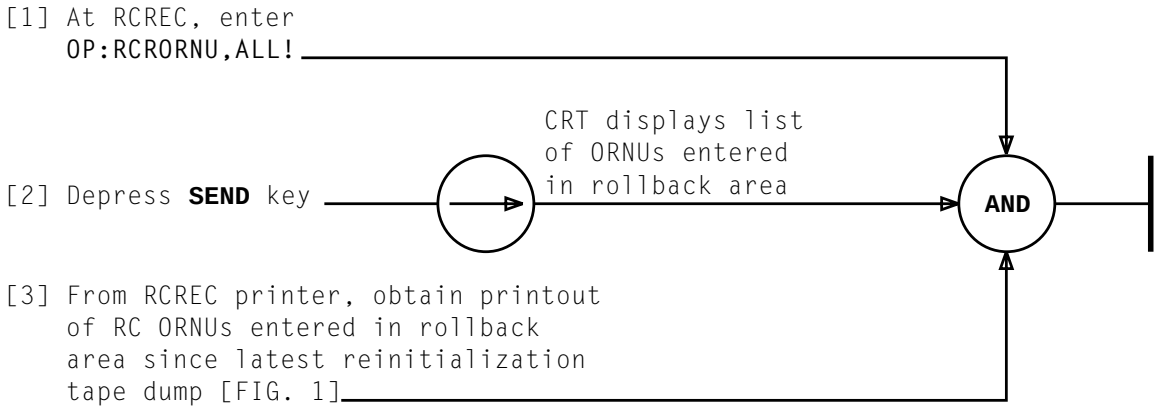


```
M 55 OP:RCRORNU MSG COMPL
     ROLLBACK AREA ORNU SINCE THE LATEST TAPE:
      ORNU   FORM   ORNU   FORM   ORNU   FORM   ORNU   FORM   ORNU   FORM   ORNU   FORM
      156259 100    156258 100    156257 104    156256 102    156256 102    156254 101
      156253 101    156252 200    123123 100    123123 100    156249 107    156239 108
      155239 108    155238 100    155238 200    155237 101    155236 101    155236 101
      155235 102    155235 102    155234 108    155233 100    155233 100    155232 200
      155232 200    155231 105    155230 106    155230 106    155229 103    155229 103
      155228 100    155227 101    155227 101    155226 200    155226 200    155225 104
      155224 104    155224 104    155223 107    155223 107    155222 104    155221 100
      060482        13:55:44
      #366
```

FIG. 1 — Sample Printout of Rollback Area History Showing RC ORNUs Entered Since Latest Reinitialization Tape Dump

OBTAIN PRINTOUT OF ORNUs ENTERED IN ROLLBACK AREA

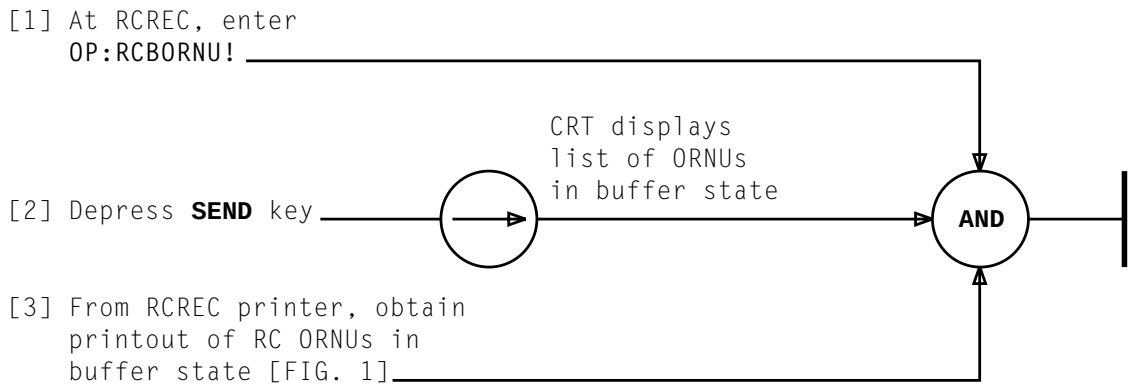


```
M 40  OP:RCBORNU MSG COMPL
      BUFFER CONTAINS THE FOLLOWING ORNU:
      226000  228500  228501  228502


      08/08/86   11:40:50
      #919
```

FIG. 1 – Sample Printout of ORNUs In Buffer State

OBTAIN PRINTOUT OF ORNUs IN BUFFER STATE

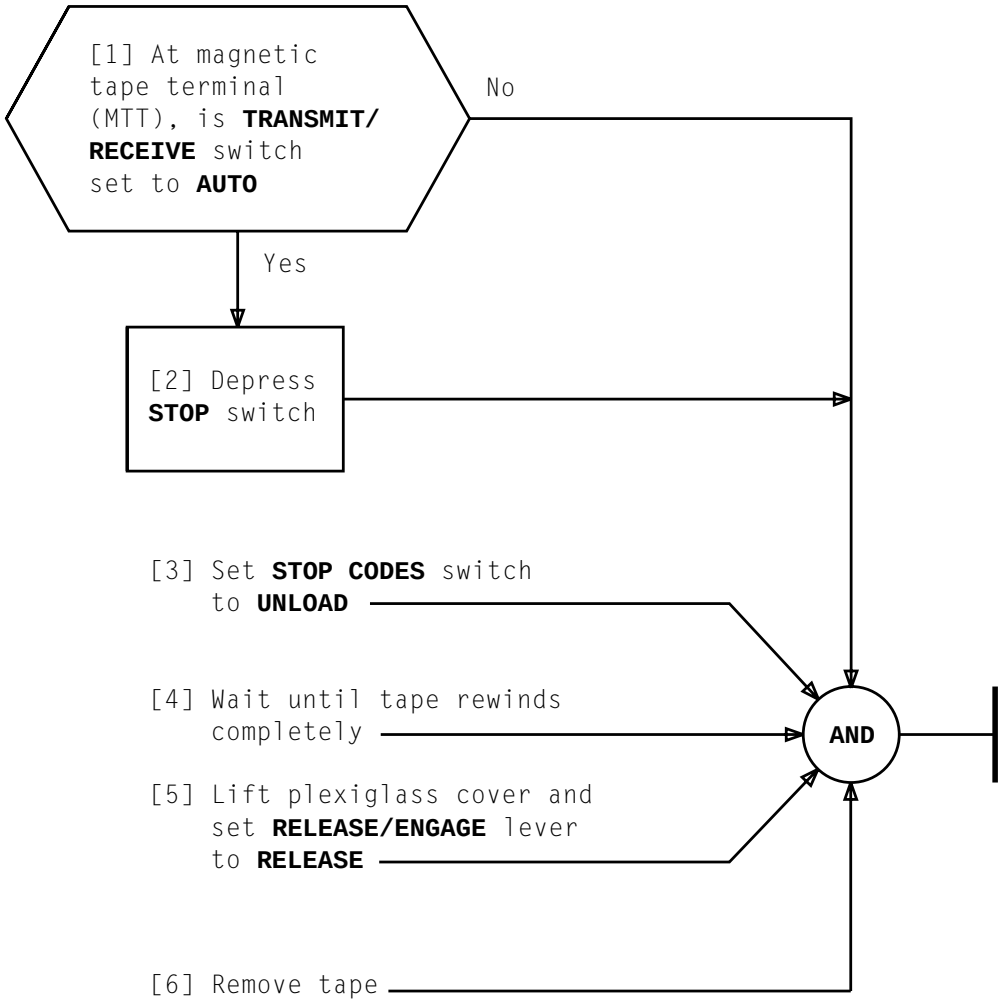

REMOVE MTT TAPE CARTRIDGE

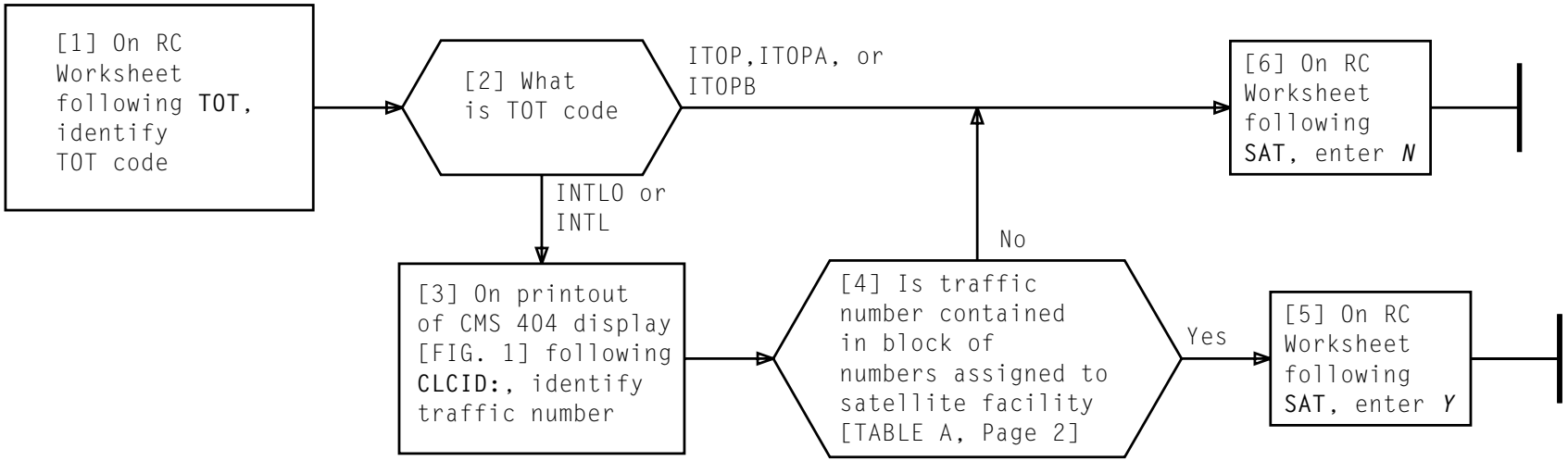

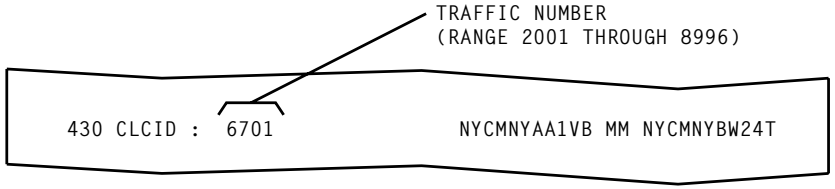

FIG. 1 – Sample Printout of CMS 404 Display (Partial)

ENTER SATELLITE (SAT) CODE (INTERNATIONAL)

TABLE A

***4ESS* SWITCH OVERSEAS CIRCUIT NUMBERING PLAN (PARTIAL)**

CCITT5				CCITT6			
ONE WAY	A — Z	CABLE	1001 — 1096 1201 — 1296 1301 — 1396 1601 — 1696 1701 — 1796	ONE WAY	A — Z	CABLE	3001 — 3096 3201 — 3296 3301 — 3396 3501 — 3596
		SATELLITE	2001 — 2096 2201 — 2296 2301 — 2396 2401 — 2496 2501 — 2596			SATELLITE	4201 — 4296 4301 — 4396 4401 — 4496 4501 — 4596
	Z — A	CABLE	1101 — 1196 1401 — 1496 1501 — 1596 1801 — 1896 1901 — 1996		Z — A	CABLE	3101 — 3196 3601 — 3696 3701 — 3796 3801 — 3896 3901 — 3996
		SATELLITE	2101 — 2196 2601 — 2696 2701 — 2796 2801 — 2896 2901 — 2996			SATELLITE	4601 — 4696 4701 — 4796 4801 — 4896 4901 — 4996
TWO WAY	A 1st Choice	CABLE	6001 — 6096 6101 — 6196 * 8801 — 8896	TWO WAY	A 1st Choice	CABLE	8001 — 8096 8801 — 8896
		SATELLITE	7001 — 7096 7101 — 7196			SATELLITE	8101 — 8196
	Z 1st Choice	CABLE	7201 — 7296 7301 — 7396 * 8901 — 8996		Z 1st Choice	CABLE	8201 — 8296 8901 — 8996
		SATELLITE	7401 — 7496 7501 — 7596			SATELLITE	8701 — 8796

*Circuit Number Block Assigned CCITT5 or CCITT6

ENTER SATELLITE (SAT) CODE (INTERNATIONAL)

1. Obtain blank RC Worksheet Form 202

On RC Worksheet Form 202 [FIG. 1]:
2. Following **RC:TRK;OUT;**, enter ***ACT***

3. Following **ORNU**, enter assigned ORNU

4. Following **TSG**, enter TSG CIN from printout of CMS 404 display for activated CON

5. Under **QTRK**, enter quantity of trunks to be deleted (not to exceed ***24***)

6. Under **FTFN**, enter lowest TFN to be deleted

7. Following **REMARKS**, enter ***CON*** followed by applicable CON number

End of procedure

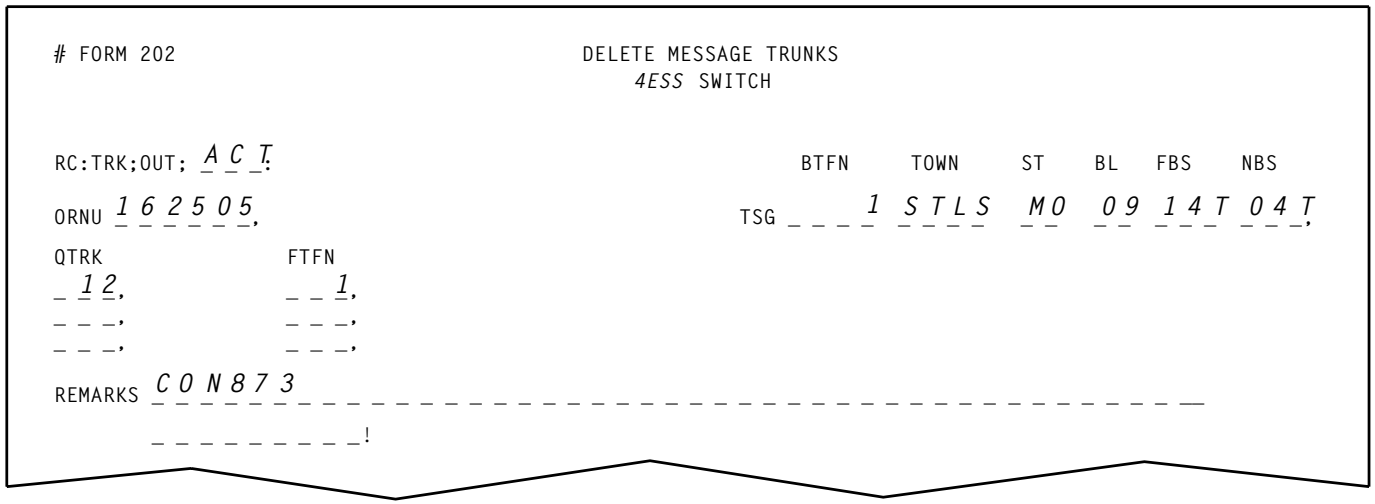

FIG. 1 — Sample of Completed RC Worksheet Form 202

COMPLETE ENTRIES ON RC WORKSHEET FORM 202

1. Obtain blank RC Worksheet Form 105

On RC Worksheet Form 105 [FIG. 1]:
2. Following **RC:TSG;CHG;OPT(OUTTFNB)**, enter *ACT*

3. Following **ORNU**, enter assigned ORNU

4. Following **TSG**, enter TSG CIN from printout of CMS 404 display for activated CON

5. Following **FTFN**, enter lowest TFN to be deleted

6. Following **REMARKS**, enter *CON* followed by applicable CON number

End of procedure

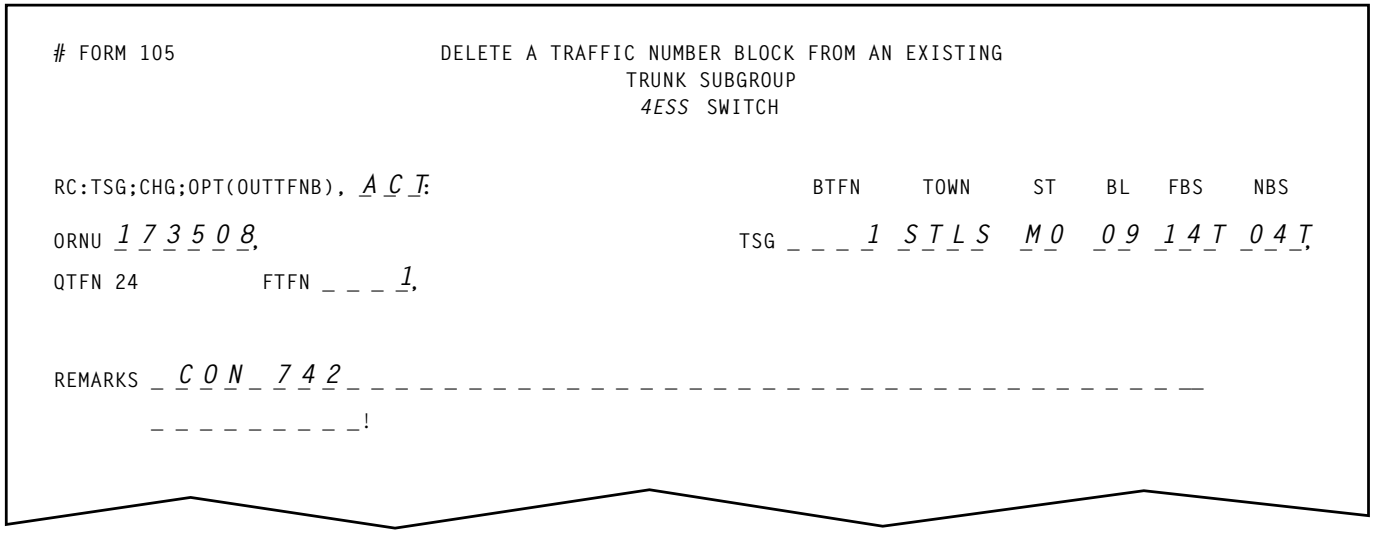

FIG. 1 — Sample of Completed RC Worksheet Form 105

COMPLETE ENTRIES ON RC WORKSHEET FORM 105

NOTE: The CMS 961 Report should be obtained daily to determine the status of circuit orders residing in CMS

1. Request CMS center to send current CMS 961 Report to Machine Administration Center (MAC) receive-only channel

End of procedure

OBTAIN CURRENT CMS 961 REPORT

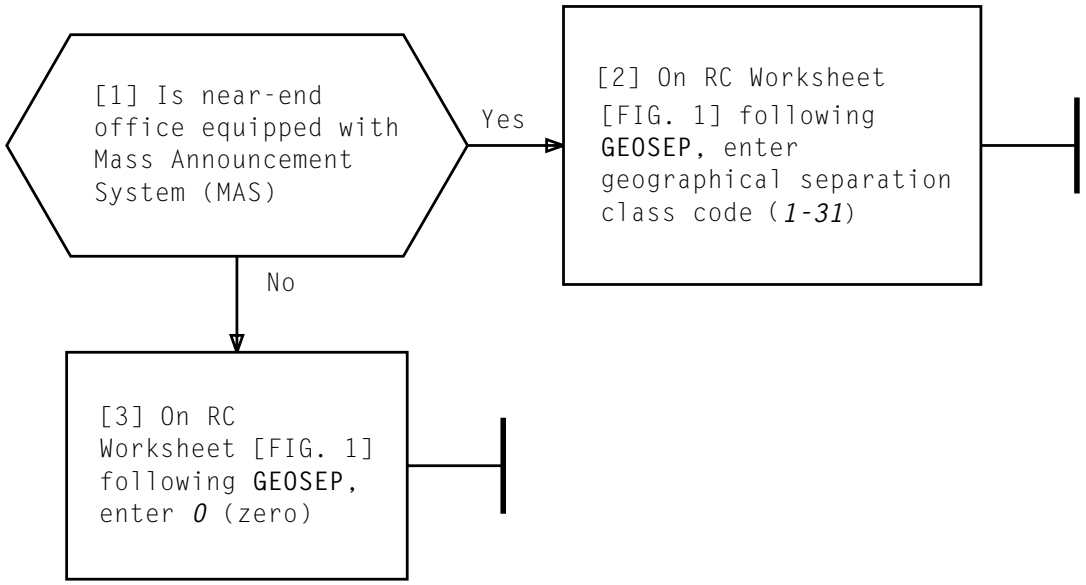

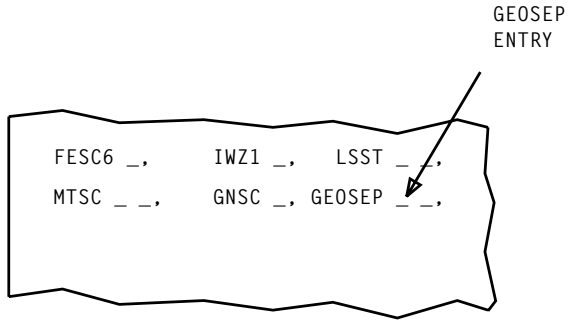

FIG. 1 — Sample of RC Worksheet (Partial)

ENTER GEOGRAPHICAL TRAFFIC SEPARATION CLASS (GEOSEP) CODE

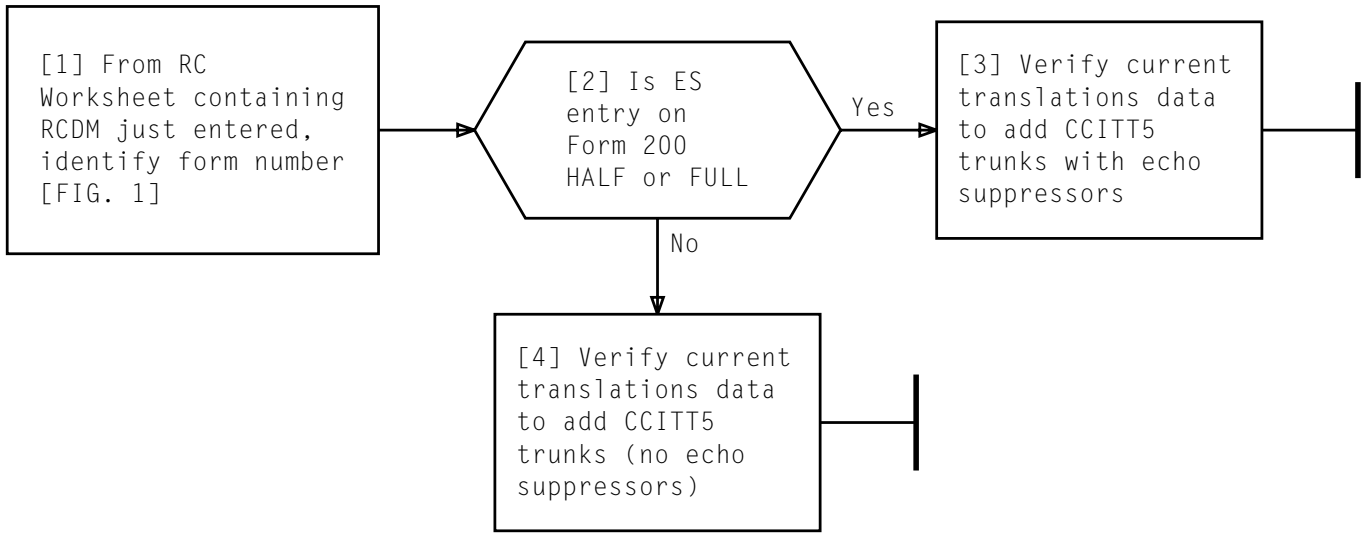

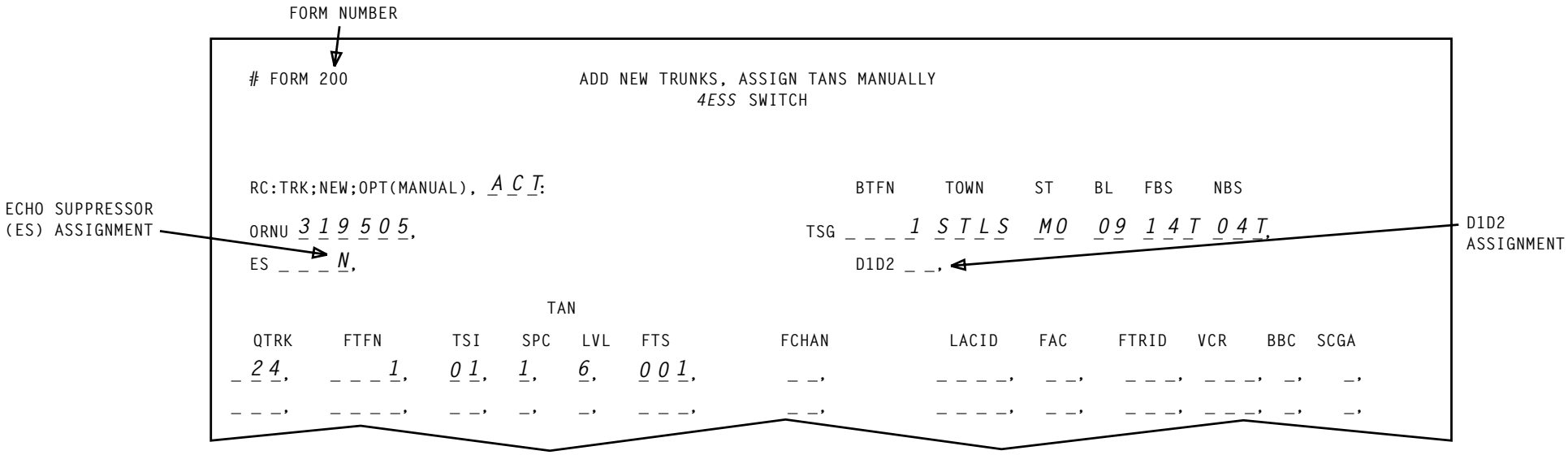

FIG. 1 — Sample of Completed RC Worksheet Form 200

DETERMINE VERIFICATION TO BE PERFORMED (INTERNATIONAL)

1. Carefully remove original copy of *4ESS* **SWITCH RECENT CHANGE LOG SHEET** [FIG. 1, Page 2] from TOP volume
2. Reproduce extra copies of log sheet for further use
3. Return original log sheet to TOP volume

End of procedure

OBTAIN BLANK COPIES OF *4ESS* SWITCH RECENT CHANGE LOG SHEET

4ESS SWITCH RECENT CHANGE LOG SHEET

SEQUENCE NUMBER (500-899)	RCDM WORK-SHEET	DESCRIPTION OF RECENT CHANGE ORDER	RCDM			REMARKS	VERIFY	
			BUF	TST	ACT		MAC	MOC

ORNU is equal to Julian Date plus Sequence Number (132 502)

Sequence Number

Julian Date

JULIAN DATE __ __ __

FIG. 1 — Sample of Blank *4ESS* SWITCH RECENT CHANGE LOG SHEET

OBTAIN BLANK COPIES OF *4ESS* SWITCH RECENT CHANGE LOG SHEET

1. See NOTE 1. Obtain ring binder and label it *4ESS* **SWITCH RECENT CHANGE LOG BOOK**

2. Obtain blank copies of *4ESS* **SWITCH RECENT CHANGE LOG SHEET** [DLP-556] for use as needed

3. On *4ESS* **SWITCH RECENT CHANGE LOG SHEETS** following **JULIAN DATE**, enter Julian calendar date [FIG. 1, Page 2]

4. File dated log sheets in ring binder in Julian date sequence

End of procedure

NOTE 1

In order to efficiently control and process Recent Change Circuit Orders, a Recent Change Log Book should be established. Use the Recent Change Log Book for reference to show what circuit order action has been completed and what is in process. The *4ESS* **SWITCH RECENT CHANGE LOG SHEET**, as used in this volume, serves a useful purpose in controlling the process of entering recent changes into current translations.

ESTABLISH *4ESS* SWITCH RECENT CHANGE LOG BOOK

4ESS SWITCH RECENT CHANGE LOG SHEET

SEQUENCE NUMBER (500-899)	RCDM WORK-SHEET	DESCRIPTION OF RECENT CHANGE ORDER	RCDM			REMARKS	VERIFY	
			BUF	TST	ACT		MAC	MOC

ORNU is equal to Julian Date plus Sequence Number (132 502)

Sequence Number

Julian Date

JULIAN DATE __ __ __

FIG. 1 – Sample of Blank *4ESS* SWITCH RECENT CHANGE LOG SHEET

OBTAIN BLANK COPIES OF *4ESS* SWITCH RECENT CHANGE LOG SHEET

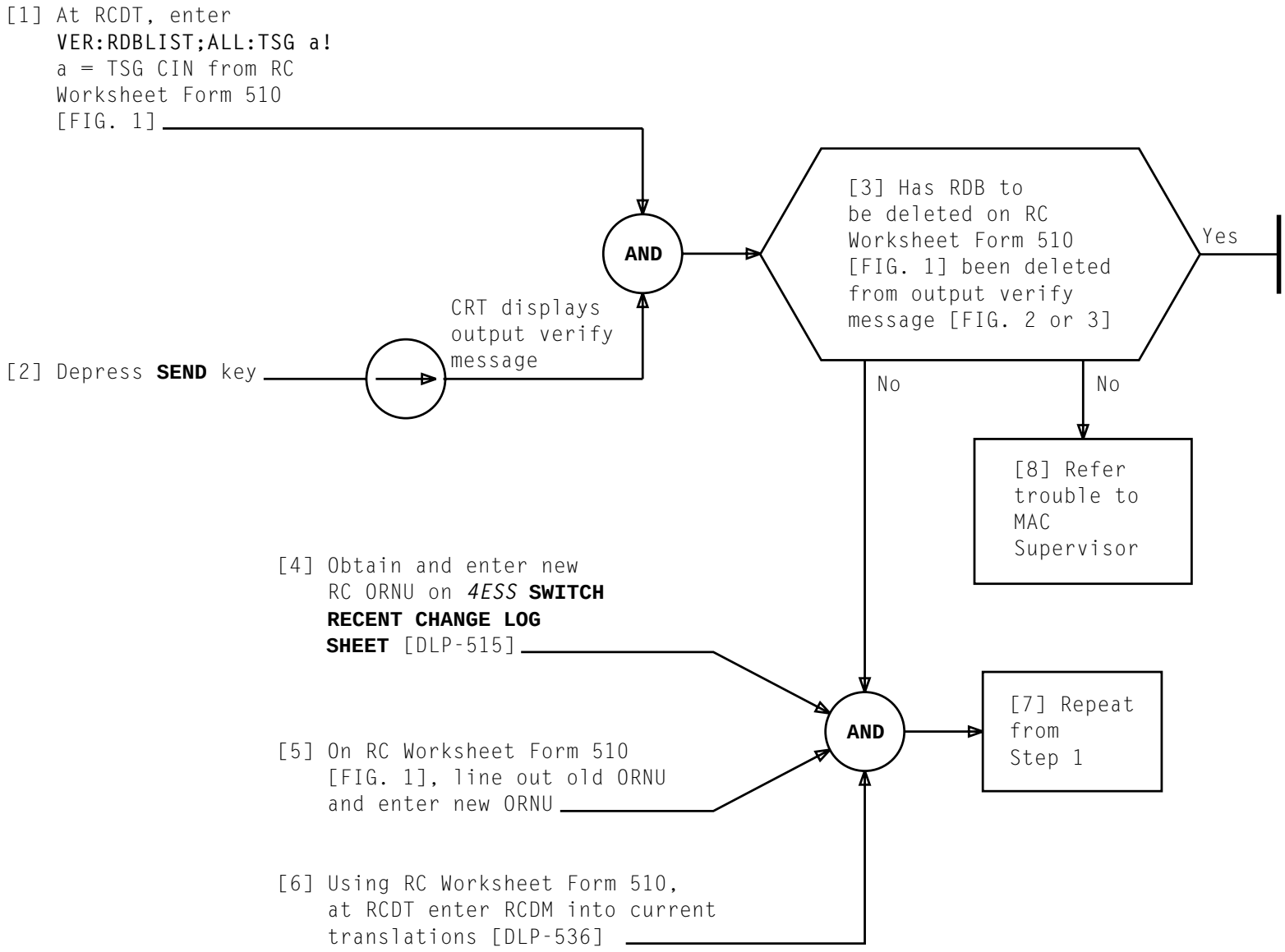

VERIFY CURRENT TRANSLATIONS DATA TO DELETE RDB

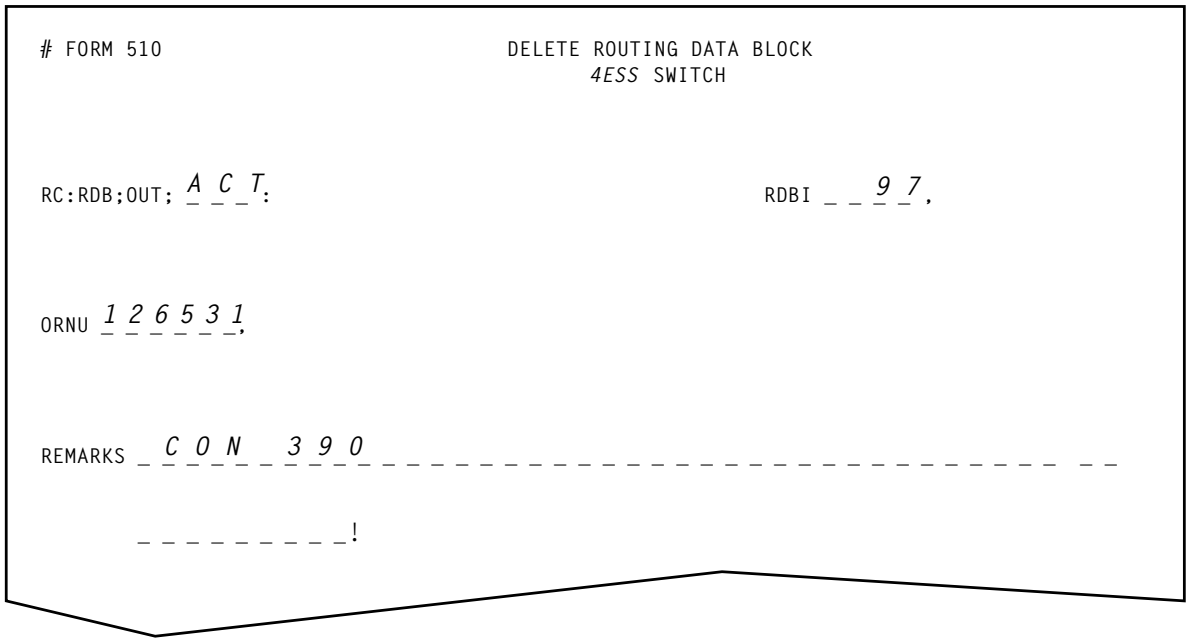

FIG. 1 — Sample of Completed RC Worksheet Form 510

VERIFY CURRENT TRANSLATIONS DATA TO DELETE RDB

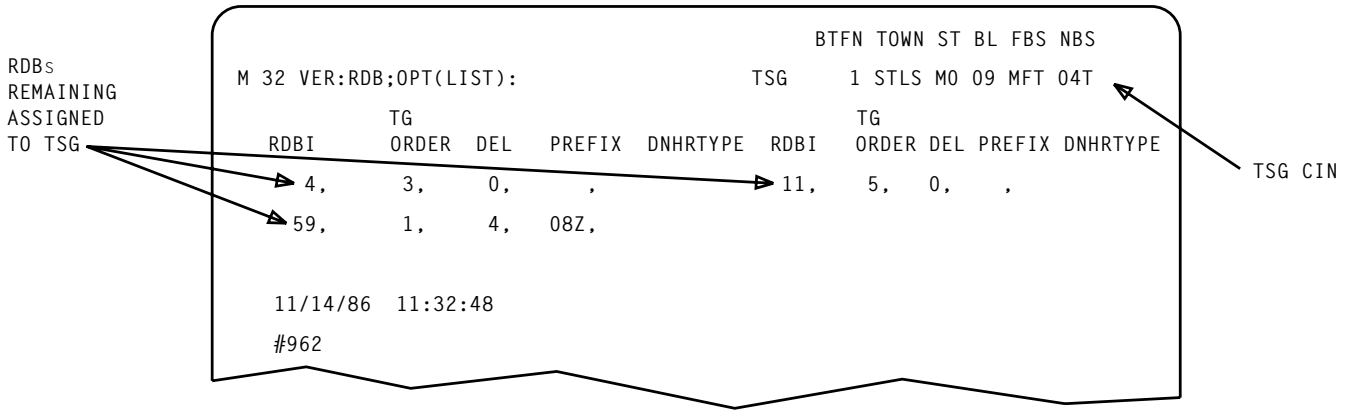

FIG. 2 — Sample CRT Display of RDBs Assigned to TSG

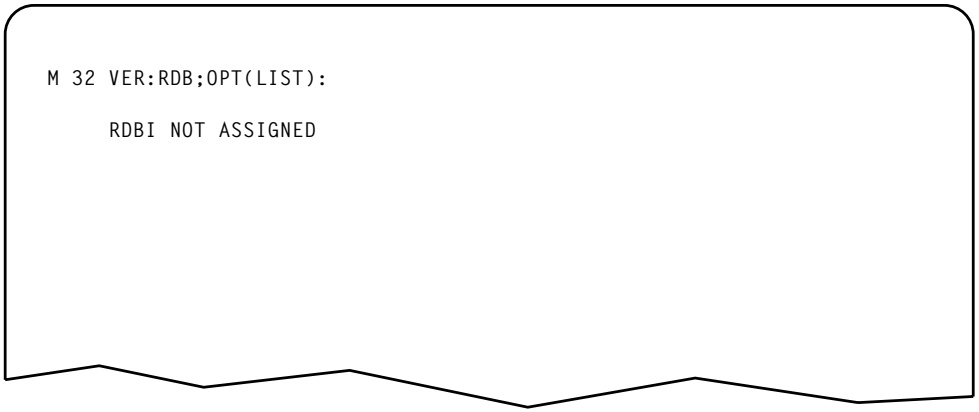

FIG. 3 — Sample CRT Display of No RDBs Assigned to TSG

VERIFY CURRENT TRANSLATIONS DATA TO DELETE RDB

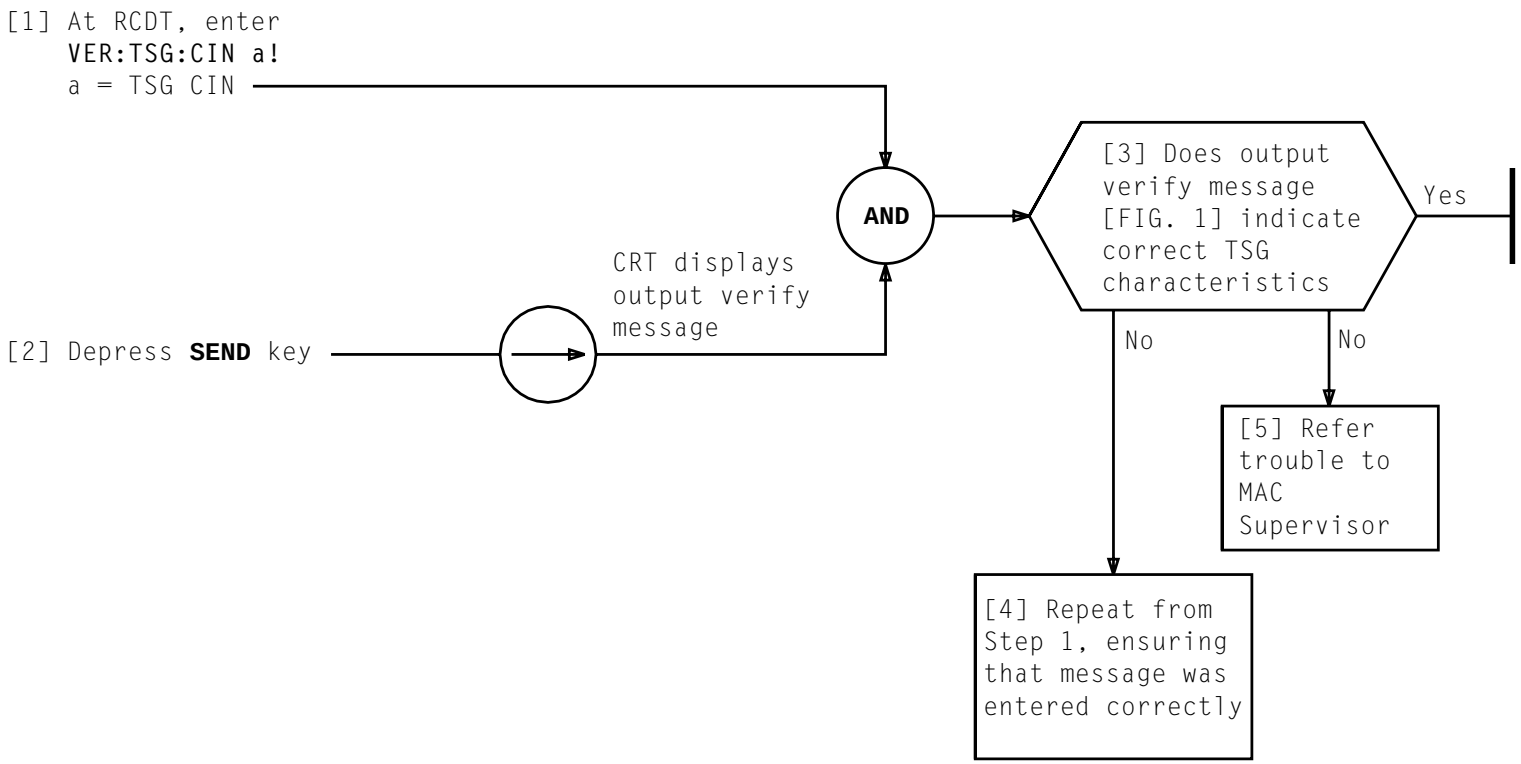


```
                                                  BTFN TOWN ST BL FBS NBS

                                                TSG ---- ---- -- -- --- ---,
PCF ----,   AOPC --------,                      DPC --------,

FENCLASS ------,  FENID ------,                TFG -,     TSGBBC -,  VDCAP -, DATAF -,
FEAREA --------,  FESWID --------,             EXSEQ -,      FEPTY -,
QTFN ---,   TOT -----,  SAT -,                 DOM ----,     ACD -,    IT -,
FENPA ---,  FEOFC ---,  FELATA ---,            FESC6 -,      IWZ1 -,   LSST --,
MEM -,      PSES -,     INSEP ---,             MTSC --,      GNSC -,   GEOSEP --,
```

TSG CHARACTERISTICS

FIG. 1 — Sample CRT Display of Output Verify Message

VERIFY TSG CHARACTERISTICS

Issue 1	JAN 1995
234-152-209	DLP
PAGE 1 of 1	559

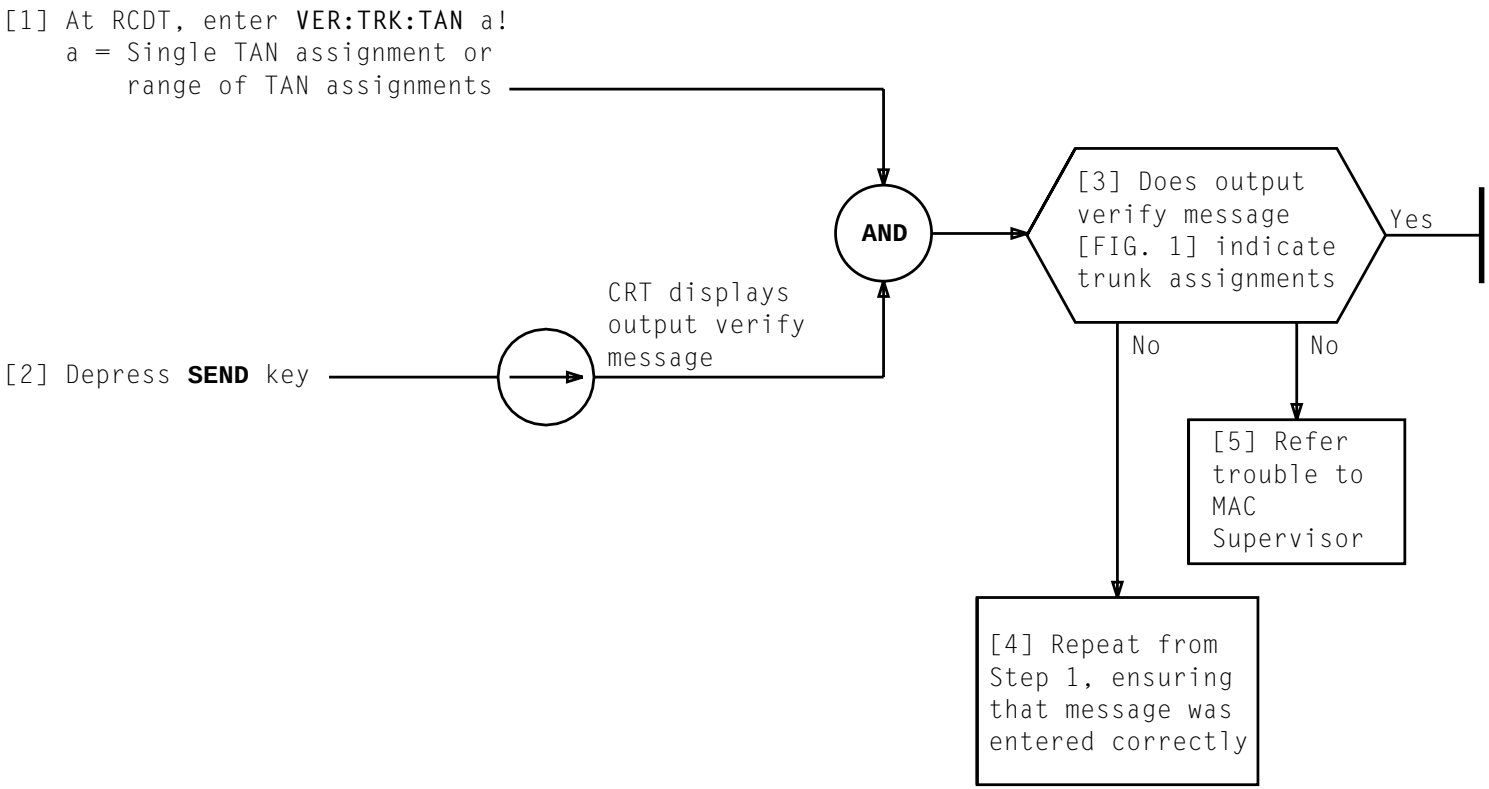


```
M 18 VER:TRK:
                                                    BTFN  TOWN  ST   BL   FBS  NBS

                                              TSG     1  STLS  MO   09   14T  04T,

     ES      N,                                      D1D2 N,

                                  TAN
     QTRK    FTFN         TSI   SPC   LVL   FTS         FCHAN         STATUS
      24,       1,          1,    1,    6,    1,           0,          CAD,
```

FIG. 1 - Sample CRT Display of Output Verify Message

VERIFY TSG TRUNK ASSIGNMENTS

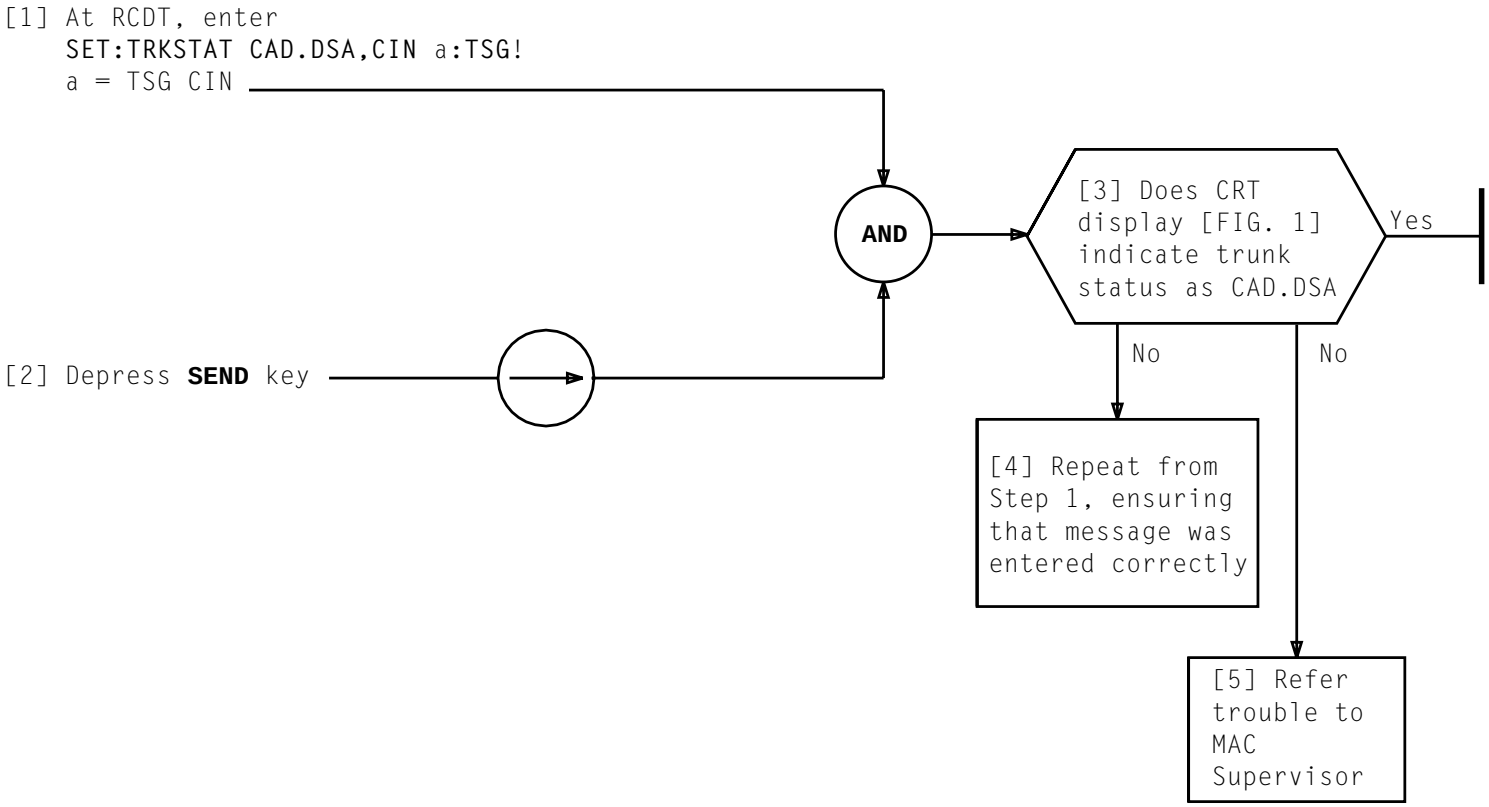


```
SET:TRKSTAT CAD.DSA<MAN> TRAF < *ICT* X > ,    CIN 1 NAPV IL BL O3T LAB
```

FIG. 1 - Sample CRT Display - Output Message

SET TSG TRUNK MAINTENANCE STATE TO CIRCUIT ADMINISTRATION DISABLED (CAD.DSA)

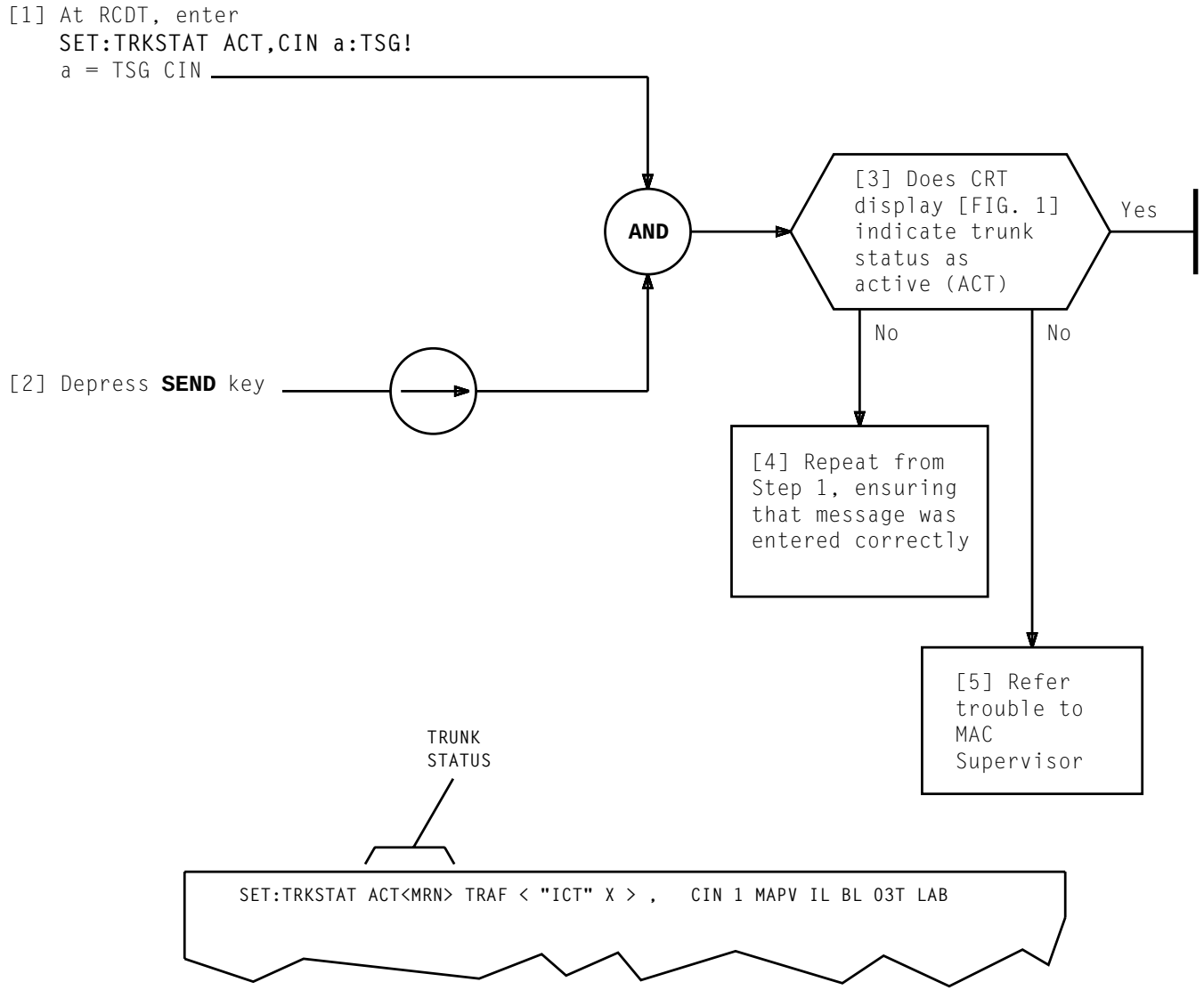

FIG. 1 - Sample CRT Display of Trunk Status

SET TSG TRUNK MAINTENANCE STATE TO ACTIVE (ACT)

ITEM	ISSUE	ITEM	ISSUE	ITEM	ISSUE	ITEM	ISSUE	ITEM	ISSUE	ITEM	ISSUE
IXL-001		DLP-517		DLP-552							
NTP-002		DLP-518		DLP-553							
NTP-003		DLP-519		DLP-554							
NTP-004		DLP-520		DLP-555							
NTP-005		DLP-521		DLP-556							
NTP-006		DLP-522		DLP-557							
NTP-007		DLP-523		DLP-558							
NTP-008		DLP-524		DLP-559							
NTP-009		DLP-525		DLP-560							
NTP-010		DLP-526		DLP-561							
NTP-011		DLP-527		DLP-562							
NTP-012		DLP-528		CKL-891							
NTP-013		DLP-529		TNG-893							
NTP-014		DLP-530									
NTP-015		DLP-531									
NTP-016		DLP-532									
NTP-017		DLP-533									
TAD-100		DLP-534									
DLP-500		DLP-535									
DLP-501		DLP-536									
DLP-502		DLP-537									
DLP-503		DLP-538									
DLP-504		DLP-539									
DLP-505		DLP-540									
DLP-506		DLP-541									
DLP-507		DLP-542									
DLP-508		DLP-543									
DLP-509		DLP-544									
DLP-510		DLP-545									
DLP-511		DLP-546									
DLP-512		DLP-547									
DLP-513		DLP-548									
DLP-514		DLP-549									
DLP-515		DLP-550									
DLP-516		DLP-551									

● REVISED OR ADDED ITEM ☐ CANCELED ITEM

Issue 1 | JAN 1995

234-152-209 | CKL

CHECKLIST

891