Lucent Technologies
Bell Labs Innovations

Task Oriented Practice (TOP)

4ESS™ SWITCH
Common Network Interface
Growth/Degrowth

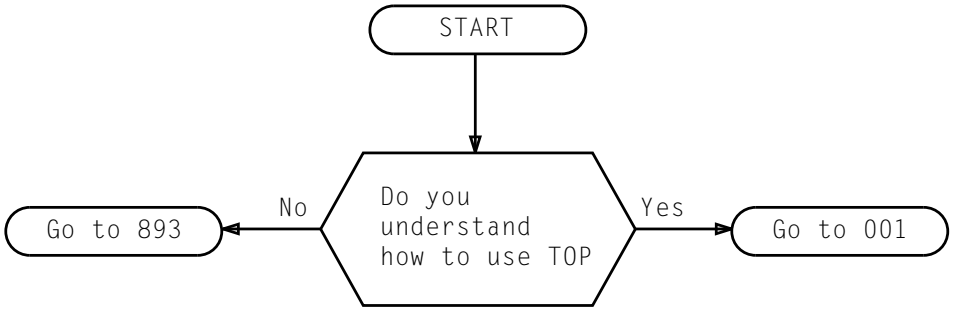

TOP Comments Hot Line:

Monday through Friday
8:00 a.m. - 4:00 p.m. (Eastern)
Call: 1-888-LTINFO6
Or FAX to: 1-910-727-3043

Copyright© 1998 Lucent Technologies
Unpublished and Not for Publication
All Rights Reserved
Printed in U.S.A.

Issue 6	**SEP 1998**
234-153-055	**TPG**
TITLE PAGE	**000**

Copyright© 1998 Lucent Technologies. All Rights Reserved.
This material is protected by the copyright laws of the United States and other countries. It may **not** be reproduced, distributed, or altered in any fashion by any entity including other Lucent Technologies Business Units or Divisions without the expressed written consent of the Customer Training and Information Products Organization.

For permission to reproduce or distribute, please contact:

4ESS™ Switch Documentation Customer Information Development Manager — (1-888-LTINFO6)

Notice

Every effort is made to ensure that the document information is complete and accurate at the time of printing. However, information is subject to change.

Trademarks

4ESS is a trademark of Lucent Technologies

Ordering Information

To order this document and all associated documentation, use URL: "http://www.cic.lucent.com" or one of the following methods:

a. **Lucent Technologies Employees:** Mail or fax Form IND 1-80.80, available from the Lucent Technologies Customer Information Center, by using the following address or fax number.

   Note: Lucent Technologies Business Unit/Division and all required billing information must be provided.

   Lucent Technologies Customer Information Center
   Attention: Order Entry Department
   2855 North Franklin Road
   Indianapolis, Indiana 46219-1999
   or
   Call: 1-888-LUCENT-8 Fax: 1-800-566-9568

b. **AT&T:** Submit orders by calling 1-800-432-6600 or fax to 1-800-566-9568

c. **Local Exchange Carriers (LEC):** Process orders through your Technical Information Resource Management (TIRM) coordinator. If you are unsure who your TIRM coordinator is, call 1-888-LUCENT-8

d. **Federal Government:** Orders must be faxed to the Lucent Technologies Customer Information Center using the following number:

   Fax: 1-800-566-9568

e. **All Others:** Call: 1-888-LUCENT-8

Developed by:

Lucent Technologies Systems for Customer Training and Information Products (CTIP)
Lucent Technologies is the successor to the business and assets of AT&T Network Systems business unit.

How Are We Doing?

Document Title: ***4ESS***™ Switch — Common Network Interface — Growth/Degrowth

Document No.: 234-153-055 Issue Number: 6 Date: September 1998

Lucent Technologies welcomes your feedback on this document. Your comments can be of great value in helping us improve our documentation.

1. Please rate the effectiveness of this document in the following areas:

	Excellent	Good	Fair	Poor	Not Applicable
Ease of Use					//////////////////
Clarity					//////////////////
Completeness					//////////////////
Accuracy					//////////////////
Organization					//////////////////
Appearance					//////////////////
Examples					
Illustrations					
Overall Satisfaction					//////////////////

2. Please check the ways you feel we could improve this document:

- ☐ Improve the overview/introduction
- ☐ Improve the table of contents
- ☐ Improve the organization
- ☐ Include more figures
- ☐ Add more examples
- ☐ Add more detail
- ☐ Make it more concise/brief
- ☐ Add more step-by-step procedures/tutorials
- ☐ Add more troubleshooting information
- ☐ Make it less technical
- ☐ Add more/better quick reference aids
- ☐ Improve the index

Please provide details for the suggested improvement. _____

_____

3. What did you like most about this document?

_____

_____

4. Feel free to write any comments below or on an attached sheet.

_____

_____

_____

_____

If we may contact you concerning your comments, please complete the following:

Name: _____ Telephone Number: (_____)_____

Company/Organization: _____ Date: _____

Address: _____

When you have completed this form, please return to the address on the back or Fax to: 910-727-3043.

Do Not Cut—Fold Here And Tape

NO POSTAGE
NECESSARY
IF MAILED
IN THE
UNITED STATES

Lucent Technologies
Bell Labs Innovations

BUSINESS REPLY MAIL

FIRST CLASS PERMIT NO. 1999 GREENSBORO, N.C.

POSTAGE WILL BE PAID BY ADDRESSEE

DOCUMENTATION SERVICES
2400 Reynolda Road
Winston-Salem, NC 27199-2020

FIND YOUR JOB IN THE LIST BELOW . . . . . THEN GO TO

Acceptance NTP-002

Activate Signaling Link(s) on Existing Link Interface Pack NTP-003

Add CCS7 Node Growth — Support to Installer NTP-004

Add DCHAN Node Growth — Support to Installer NTP-005

Add High Density Backplane (HDB) Cabinets 06 and 38 — Support to Installer NTP-006

Add IMS User Node (IUN) Growth — Support to Installer NTP-007

Add Second Pair of Direct Link Node(s) to Ring Node Cabinets 00 and 32 — Support to Installer NTP-008

Add Shelf Unit and/or Link Node(s) to Ring Node Cabinet — Support to Installer NTP-017

Add SSI Ring Node Cabinet (RNC) Growth — Support to Installer NTP-009

Add Link Interface (LI) Pack to Existing DCHAN Node(s) — Support to Installer NTP-010

Convert IUN Node(s) to CCS7 — Support to Installer NTP-011

Convert IRN2 IUN Node(s) to DCHAN Node(s) — Support to Installer NTP-012

Convert IUN Node(s) With IRN to DCHAN With IRN2 . . . . . NTP-013

Degrow Shelf Unit and/or Link Node(s) - Support to Installer NTP-014

Establish D-Channel Links for DCHAN Backup NTP-015

Relocate Shelf Unit - Support to Installer NTP-016

Acceptance tests are not required for verification of the growth procedures contained in this volume. The readiness acceptance of a frame or unit to become a part of the operating system is established by the successful completion of the particular growth procedure in its entirety. This acceptance is covered within NTPs contained herein.

ACCEPTANCE

DO THE ITEMS BELOW IN THE ORDER LISTED . . . . . FOR DETAILS, GO TO

		RESPONSIBILITY	
	NOTES: 1. AMA data should be transferred (tape and/or teleprocessing) prior to start of each night's growth activity 2. This procedure must be performed during light traffic periods 3. If DCHAN signaling link(s) is being grown, nailup for each link must be assigned in ODA 4. This procedure contains soak interval for verifying system operation and stability during growth. During the soak interval, all abnormal conditions (such as interrupts, interjects, and diagnostic failures related to growth) must be investigated and resolved immediately. Growth equipment, being soaked, must be error free for at least the time specified		
1	If This Procedure Is Being Performed Immediately After Link Node, Link Interface Pack, or High Density Backplane Growth Cabinet, Go to Item 10	TELCO	—
2	Determine if Space Is Available for Growth Signaling Link(s) on Existing Link Interface Pack of Same Node Type. If Space Is Not Available, Discontinue This Procedure	TELCO	DLP-532
3	If Cables Are Required To Be Connected for This Signaling Link(s), Perform Items 4 and 5; Otherwise, Go to Item 6	TELCO	—
4	Dress Cables, Required for This Growth, in Place and Connect per SD-3F037-01 (for SSI) or SD-3F050-01 (for HDRNC)	TELCO	—
5	If Signaling Link Terminates at Digital Facility Access (DFA) Frame or Digital Crossconnect Frame:		
	A. If Signaling Link Terminates at Digital Facility Access Frame:		
	1. At Each 2500 Series Data Service Unit (DSU) for Each Growth Data Link, Set Options Using 2500 Series Data Service Unit Users Manual	TELCO	—
	2. At Each 2500 Series Data Service Unit for Each Growth Data Link, Depress **LL** Pushbutton Switch to In Position	TELCO	—
	B. If Signaling Link Terminates at Digital Crossconnect Frame:		
	1. Using Office Drawing T-nnnn-Hn-407, Determine Crossconnect Assignments for Each Growth Signaling Link (n = Office Unique Drawing Identification Number)	TELCO	—

ACTIVATE SIGNALING LINK(S) ON EXISTING LINK INTERFACE PACK

DO THE ITEMS BELOW IN THE ORDER LISTED . . . . . FOR DETAILS, GO TO			
5 (Contd)	2. At Digital Crossconnect Frame, Connect Hairpin Plug (Loopback) for Each Growth Signaling Link at Location(s) Determined in Item 5.B.1	TELCO	—
6	Verify System Status	TELCO	DLP-542
	NOTE: Items 7 through 9 are being performed to ensure clean file system before starting growth		
7	Copy Incore Equipment Configuration Data Base (ECD) to Disk	TELCO	DLP-519
8	Run File System Audits to Ensure No File System Errors	TELCO	DLP-520
9	Update Backup Data Base	TELCO	DLP-521
10	If DCHAN Signaling Link(s) Is Being Grown, Change Growth DCHAN Signaling Link(s) to Unavailable Using Data Base Management System (DMS)	TELCO	DLP-561
11	If This Procedure Is Being Performed After Link Node or Link Interface Pack Growth, Go to Item 14	TELCO	—
12	Verify That Far-End Common Language Location Identification Has Been Assigned for Growth Signaling Links(s)	TELCO	DLP-535
13	If CCS7 or DCHAN Signaling Link(s) Is Being Grown, Test (Prove-in) Growth Signaling Link(s):		
	A. If CCS7 Signaling Link(s) Is Being Grown	TELCO	DLP-514
	B. If DCHAN Signaling Link(s) Is Being Grown	TELCO	DLP-515
14	Change Growth Signaling Link(s) to Available Using Data Base Management System	TELCO	DLP-534
15	Soak Growth Ring Hardware for 1 Hour To Ensure No System Problems Exist With System Operation After Growth	TELCO	—
16	Run File System Audits To Ensure No File System Errors	TELCO	DLP-520
17	Update Backup Data Base	TELCO	DLP-521
18	If Activated Signaling Link(s) Terminates at Digital Facility Access Frame, at Each 2500 Series Data Service Unit Associated With Activated Signaling Link(s), Depress **LL** Pushbutton Switch to Out Position for Normal Operation	TELCO	—
	(Continued on Page 3)		

DO THE ITEMS BELOW IN THE ORDER LISTED . . . . . FOR DETAILS, GO TO			
19	If Activated Signaling Link(s) Terminates at Digital Crossconnect Frame, at Digital Crossconnect Frame, Remove Hairpin Plug (Loopback) for Each Activated Signaling Link	TELCO	—
20	Write 3B Computer Backup Tapes	TELCO	DLP-522
21	Verify Backup Tapes	TELCO	DLP-525

DO THE ITEMS BELOW IN THE ORDER LISTED . . . . . FOR DETAILS, GO TO

		RESPONSIBILITY	
	WARNING: An antistatic wrist strap must be worn to prevent electrostatic discharge and possible damage to circuit packs while handling		
	NOTES: 1. CNI Data Base Administrator must enter office-dependent data prior to the start of this procedure 2. This procedure should be performed during light traffic periods 3. This procedure contains a soak interval for verifying system operation and stability during growth. During the soak interval, all abnormal conditions (such as interrupts, interjects, and diagnostic failures related to growth) must be investigated and resolved immediately. Growth equipment, being soaked, must be error free for at least 12 hours. **No other growth activity can take place until this soak is complete** 4. Throughout this procedure, the following term, **LNxx yy**, is used where: **xx = Group Number** **yy = Member Number**		
1	Ensure Room Is Available for Growth Link Node(s) in the Ring Node Cabinet (RNC)	INST	—
2	Ensure All Cables and Circuit Packs for Growth Link Node(s) Are Available	INST	—
3	Ensure That Office-Dependent Node Data Is Populated	TELCO	DLP-550
4	Verify System Status	TELCO	DLP-542
5	Perform Preliminary Installation Activities	INST	—
6	Safe Point To Temporarily Stop This Procedure	TELCO	—
7	If Procedure Was Stopped in Item 6, Verify System Status	TELCO	DLP-542
8	At MCRT, Enter Following Messages To Inhibit Automatic Diagnostics: • **INH:DMQ;SRC REX!** • **INH:DMQ;SRC ADP!**	TELCO	—
9	Perform the Following To Ensure Clean File System Before Starting Growth:		
	1. Copy Incore Equipment Configuration Data Base (ECD) to Disk	TELCO	DLP-519
	2. Run File System Audits To Ensure No File System Errors	TELCO	DLP-520
	3. Update Backup Data Base	TELCO	DLP-521

ADD CCS7 NODE GROWTH

DO THE ITEMS BELOW IN THE ORDER LISTED . . . . . FOR DETAILS, GO TO			
	NOTE: Only link nodes associated with one shelf unit can be grown prior to entering the soak interval. If there are other link nodes to be grown into another shelf unit, this procedure must be repeated.		
10	Enter Message **CFR:RING,LNxx yy;EXCLUDE!** To Isolate the Growth Link Node(s)	TELCO	DLP-536
11	Determine Node-Specific Data for All Growth Nodes	TELCO	DLP-554
12	Recent Change the Node-Specific Variables as Described in DLP-558 (Do Not Exit Recent Change)	TELCO	DLP-552
13	Recent Change Each Growth Node From UNEQIP to GROW	TELCO	DLP-553
14	Connect Unbalanced (Intraframe) Bus Cables and Balanced (Interframe) Bus Cables, as Required for Growth Link Node(s)	INST	—
15	Seat Circuit Boards:		
	1. SSI RNC: Seat NP, RI1 RIO, and LIO	INST/TELCO	—
	2. HD RNC: Seat IRNB and LIO	INST/TELCO	—
16	Connect Interface Cables	INST	—
	NOTE: If Phase 48 Fails, the dataset options are incorrect		
17	Enter Message **DGN:LNxx yy;RAW!** To Diagnose Each Growth Link Node. No Diagnostic Failures Are Allowed	TELCO	—
18	Recent Change Each Growth Link Node From GROW to OOS	TELCO	DLP-509
19	Enter Message **CFR:RING!** To Return Ring Configuration to Normal State	TELCO	DLP-530
20	At MCRT, 1106 Page Is Not Displayed, Enter **1106** in Command Mode	TELCO	—
21	Enter Message **RST:LNxx yy;UCL!** To Unconditionally Restore Each Growth Link Node	TELCO/INST	DLP-531
22	Copy Incore ECD to Disk	TELCO	DLP-519
23	At MCRT, Enter the Following Messages To Allow Automatic Diagnostics: • **ALW:DMQ;SRC REX!** • **ALW:DMQ;SRC ADP!**	TELCO	—
24	Run File System Audits To Ensure No File System Errors	TELCO	DLP-520

DO THE ITEMS BELOW IN THE ORDER LISTED . . . . . FOR DETAILS, GO TO

25	Update Backup Data Base	TELCO	DLP-521
26	Soak Growth Ring Hardware for a Minimum of 12 Hours To Ensure That No Problems Exist With System Operation. If Problems Are Identified, Resolve Before Continuing With Any Other Activities	TELCO	—
27	Following Completion of All Growth Activities for This Job:		
	1. Write 3B Computer Backup Tapes	TELCO	DLP-522
	2. Verify Backup Tapes	TELCO	DLP-525

DO THE ITEMS BELOW IN THE ORDER LISTED . . . . . FOR DETAILS, GO TO

		RESPONSIBILITY	
	WARNING: An antistatic wrist strap must be worn to prevent electrostatic discharge and possible damage to circuit packs while handling		
	NOTES: 1. At least 48 hours, prior to the start of this procedure, CNI Data Base Administrator must be notified by the on-site work force to enter office-dependent data 2. Obtain your office T-XXXX-Hy-464 prior to the start of this procedure. Where: XXXX = Office base H = ***4ESS***™ Switch Y = 0 - 1st ***4ESS*** Switch Y = 1 - 2nd ***4ESS*** Switch 3. This procedure must be performed during light traffic periods 4. This procedure contains a soak interval for verifying system operation and stability during growth. During the soak interval, all abnormal conditions (such as interrupts, interjects, and diagnostic failures related to growth) must be investigated and resolved immediately. Growth equipment, being soaked, must be error free for at least 12 hours. **No other growth activity can take place until this soak is complete** 5. Throughout this procedure, the following term, **LNxx yy**, is used where: **xx = Group Number** **yy = Member Number**		
	WARNING: If service will be interrupted on existing nodes, a customer release must be obtained prior to starting this procedure.		
1	Ensure Room Is Available for Growth Link Node(s) in the Ring Node Cabinet (RNC)	INST	—
2	Ensure All Cables and Circuit Packs for Growth Link Node(s) Are Available	INST	—
3	Ensure That Office-Dependent Node Data Is Populated	TELCO	DLP-550
4	Verify System Status	TELCO	DLP-542
5	If Node Growth Requires Shelf Being Installed, Perform Initial Installation Activities	INST	—
6	If This Is First DCHAN Node on Shelf, Perform Cross Connection Between T1FA and PTAN/DIF at DSX	TELCO	DLP-556

DO THE ITEMS BELOW IN THE ORDER LISTED . . . . . FOR DETAILS, GO TO			
7	Safe Point To Temporarily Stop This Procedure	TELCO	—
8	If Procedure Was Stopped in Item 7, Verify System Status	TELCO	DLP-542
9	At MCRT, Enter Following Messages To Inhibit Automatic Diagnostics: • **INH:DMQ;SRC REX!** • **INH:DMQ;SRC ADP!**	TELCO	—
10	Perform the Following To Ensure Clean File System Before Starting Growth:		
	1. Copy Incore Equipment Configuration Data Base (ECD) to Disk	TELCO	DLP-519
	2. Run File System Audits To Ensure No File System Errors	TELCO	DLP-520
	3. Update Backup Data Base	TELCO	DLP-521
	NOTE: Only link nodes associated with one shelf unit can be grown prior to entering soak interval. If there are other link nodes to be grown into another shelf unit, this procedure must be repeated.		
11	If Growth Link Node(s) Will Be First Node(s) To Be Equipped on Shelf Unit, Interframe Buffer (IFB) Will Have To Be Moved From Adjacent Lower Shelf:		
	1. Enter **1106** in Command Mode To Obtain 1106 Display Page	TELCO	—
	2. Using 1106 Page, Determine Number of Next Node Lower Than Growth Node(s)	TELCO	—
	3. If Link Node Determined in Item 11.1 Is CCS7, or DCHAN:		
	1. Notify Appropriate Organizations on the Link Node Determined in Item 11.1 That Their Signaling Links Will Be Temporarily Removed From Service	TELCO	—
	2. Change Active Signaling Link(s) on the Link Node Determined in Item 11.1 to MOOS [Record Modified Signaling Link(s) For Later Use]	TELCO	DLP-526
	4. At MCRT, Enter Message **RMV:LNxx yy!** To Remove Link Node Determined in Item 11.1	TELCO	—
	5. Using 1106 Page, Determine Number of Next Node Highest Than Growth Node(s)	TELCO	—
	6. If Link Node Determined in Item 11.5 Is CCS7, or DCHAN:		
	1. Notify Appropriate Organizations on the Link Node Determined in Item 11.5 That Their Signaling Links Will Be Temporarily Removed From Service	TELCO	—

DO THE ITEMS BELOW IN THE ORDER LISTED . . . . . FOR DETAILS, GO TO			
11 (Contd)	2. Change Active Signaling Link(s) on the Link Node Determined in Item 11.5 to MOOS [Record Modified Signaling Link(s) for Later Use]	TELCO	DLP-526
	7. At MCRT, Enter Message **RMV:LNxx yy!** To Remove Link Node Determined in Item 11.5	TELCO	—
12	Enter Message **CFR:RING,LNxx yy;EXCLUDE!** To Isolate the Growth Link Node(s)	TELCO	DLP-536
13	If IFB Needs To Be Moved, as Determined in Item 11, Perform the Following:		
	1. IFB Pack Is Required To Be Moved From the Node in Item 11.1 to the Highest Growth Link Node in the Cabinet	INST	—
	2. Recent Change Link Node That IFB Was Moved From, To UNEQIP (Do Not Exit Recent Change)	TELCO	DLP-540
	3. Recent Change hv Value for Link Node in Item 11.1 and Change MAJOR State To GROW (Do Not Exit Recent Change)	TELCO	DLP-527
	4. Recent Change Link Node in Item 11.1 to OOS (Do Not Exit Recent Change)	TELCO	DLP-528
14	Determine Node-Specific Data for All Growth Nodes	TELCO	DLP-554
15	Recent Change Node-Specific Variables as Recorded in Step 14 (Do Not Exit Recent Change)	TELCO	DLP-552
16	Recent Change Each Growth Node From UNEQIP to GROW	TELCO	DLP-553
17	At RNC, Connect Unbalanced (Intraframe) Bus Cables and Balanced (Interframe) Bus Cables, as Required, for Growth Link Node(s)	INST	—
18	If Shelf Unit Was Grown in Item 5, Perform the Following:		
	1. At Growth Shelf Unit, Install Load Fuse Followed by Its Indicator Fuse	INST	—
	2. Seat **495FA/410AA** Power Unit. Ensure RNC Alarm Is Activated	INST	—
	3. At RNC, Depress **ALARM RESET** Key To Clear Power Alarm	TELCO	—
	4. At MCRT, Depress **ALM RLS (PF4)** Key To Clear Power Alarm To Silence Audible Alarm	TELCO	—
19	Seat Circuit Boards:		
	1. SSI RNC:		
	• Verify Jumper(s)	INST	—
	• Seat IRN2, LI4D(s), and T1FA (if required)	TELCO/INST	—

DO THE ITEMS BELOW IN THE ORDER LISTED . . . . . FOR DETAILS, GO TO			
19 (Contd)	2. HD RNC:		
	• Install Scatter Board on Backplane (required for each node)	INST	—
	• Seat IRN2, LI4D, and T1FA (if required)	TELCO/INST	—
20	If This Is First DCHAN Node on Shelf:		
	1. Connect T1 Interface Cable at T1FA Circuit Pack	INST	—
	2. Depress Reset Button on T1FA Circuit Pack To Avoid Failing Phase 29	INST	—
21	If Link Node Was Removed in Item 11.4 and 11.7, Perform the Following for That Node:		
	1. At MCRT, Enter Message **RST:LNxx yy!**	TELCO	—
	2. If Link Node Just Restored Was CCS7, or DCHAN:		
	1. Change Signaling Link(s) Recorded in Item 11.3 and 11.6 to IS	TELCO	DLP-529
	2. Notify Users on the Link(s) Just Restored to Service To Resume Their Activities	TELCO	—
22	Enter Message **DGN:LNxx yy;RAW!** To Diagnose Each Growth Link Node. No Diagnostic Failures Are Allowed	TELCO	—
23	Recent Change Each Growth Link Node From GROW to OOS	TELCO	DLP-509
24	Enter Message **CFR:RING!** To Return Ring Configuration to Normal State	TELCO	DLP-530
25	At MCRT, 1106 Page Is Not Displayed, Enter **1106** in Command Mode	TELCO	—
26	Enter Message **RST:LNxx yy;UCL!** To Unconditionally Restore Each Growth Link Node	TELCO/INST	DLP-531
27	Test (Prove-in) Growth Associated Signaling Link(s)- Internal Link Check	TELCO	DLP-515
	NOTE: Item 28 is service affecting if performed with active nodes on shelf unit.		
28	If This Is First DCHAN Node on Shelf, Test (Prove-in) Growth-Associated Signaling Link(s)- External Link Check	TELCO	DLP-555
29	Copy Incore ECD to Disk	TELCO	DLP-519
30	At MCRT, Enter the Following Messages To Allow Automatic Diagnostics: • **ALW:DMQ;SRC REX!** • **ALW:DMQ;SRC ADP!**	TELCO	—

DO THE ITEMS BELOW IN THE ORDER LISTED . . . . . FOR DETAILS, GO TO			
31	Run File System Audits To Ensure No File System Errors	TELCO	DLP-520
32	Update Backup Data Base	TELCO	DLP-521
33	Soak Growth Ring Hardware for a Minimum of 12 Hours To Ensure No Problems Exist With System Operation. If Problems Are Identified, Resolve Before Continuing to Any Other Activities.	TELCO	—
34	Following Completion of All Growth Activities for This Job:		
	1. Write 3B Computer Backup Tapes	TELCO	DLP-522
	2. Verify Backup Tapes	TELCO	DLP-525

DO THE ITEMS BELOW IN THE ORDER LISTED . . . . . FOR DETAILS, GO TO

		RESPONSIBILITY	
	WARNING: An antistatic wrist strap must be worn to prevent electrostatic discharge and possible damage to circuit packs while handling		
	NOTES: 1. AMA data should be transferred (tape and/or teleprocessing) prior to start of each night's growth activity 2. Associated input/output processor (IOP) and subdevices will be temporarily removed and powered down during growth. Arrangements must be made with users for temporary stoppage when IOP is removed from service 3. This procedure must be performed during light traffic periods 4. If highest link node containing interframe buffer (IFB) in ring node (RN) cabinets 00 and 32 is not an IUN, arrangements must be made with users on those link nodes for temporary stoppage when link nodes are removed 5. High density backplane (HDB) cabinet 06 contains group 06, 07, 08, 09, 10, and 11 link nodes. HDB cabinet 38 contains group 38, 39, 40, 41, 42, and 43 link nodes 6. This procedure contains soak intervals for verifying system operation and stability during growth. During the soak interval, all abnormal conditions (such as interrupts, interjects, and diagnostic failures related to growth) must be investigated and resolved immediately. Growth equipment, being soaked, must be error free for at least the time specified		
1	Verify System Status	TELCO/INST	DLP-542
2	Perform Preliminary Installation Activities	INST	—
3	Safe Point To Temporarily Stop This Procedure	INST	—
4	Verify System Status	TELCO	DLP-542
5	At MCRT, Enter Following Messages To Inhibit Automatic Diagnostics: • INH:DMQ;SRC REX! • INH:DMQ;SRC ADP!	TELCO	—
	NOTE: Items 6 through 8 are being performed to ensure clean file system before starting growth		
6	Copy Incore Equipment Configuration Data Base (ECD) to Disk	TELCO	DLP-519

DO THE ITEMS BELOW IN THE ORDER LISTED . . . . . FOR DETAILS, GO TO			
7	Run File System Audits To Ensure No File System Errors	TELCO	DLP-520
8	Update Backup Data Base	TELCO	DLP-521
9	Notify Users on Growth Associated IOP That IOP Will Be Temporarily Powered Down (IOP 0 for HDB Cabinet 06 or IOP 1 for HDB Cabinet 38)	TELCO	—
10	At Power Switch, Remove From Service and Power Down IOP Associated With Growth HDB Cabinet (Item 9)	TELCO	DLP-500
11	At Powered Down IOP, Connect Scan Point Cables From Growth HDB Cabinet	INST	—
12	Connect HDB Cabinet Alarm Cable to Office Alarm Grid	INST	—
13	Power Up and Restore to Service IOP Associated With Growth HDB Cabinet	TELCO	DLP-501
14	Notify Users on Growth Associated IOP To Resume Their Activities	TELCO	—
15	Repeat From Step 9 for Other HDB Cabinet and IOP	TELCO/INST	—
16	Perform Power Verification Tests on HDB Cabinets 06 and 38	INST	—
17	At Power Distribution (PD) Frame, Install Fuses for Power Feeders A, B, C, D, E, and F Associated With HDB Cabinets 06 and 38	INST	—
18	At HDB Cabinets 06 and 38, Unseat All Circuit Boards and **495FA** Power Units	INST	—
19	At Power Control Unit, Install Cooling Unit Fuses in HDB Cabinets 06 and 38	INST	—
20	Perform Items 21 Through 25 To Verify Power Is Fed to Proper Unit	TELCO/INST	—
21	At Power Control Unit, Install Fuses for One Node Unit To Be Powered Up. Install Load Fuse First; Then Pilot Fuse	INST	—
22	Seat **495FA** Power Units in Unit Being Powered Up (Do Not Seat Circuit Boards)	INST	—
23	At HDB Cabinet Power Control Unit, Depress **ALARM RESET** Key To Clear Power Alarm	INST	—
24	At MCRT, Depress **ALM RLS** (**PF4**) Key To Silence Audible Alarm	TELCO	—
25	Repeat Items 21 Through 24 for Each Node Unit in HDB Cabinets 06 and 38	TELCO/INST	—
26	Perform Items 27 Through 31 To Test Power Alarms for HDB Cabinets 06 and 38	INST	—
	(Continued on Page 3)		

DO THE ITEMS BELOW IN THE ORDER LISTED . . . . . FOR DETAILS, GO TO			
27	Unseat **495FA** Power Unit in One Shelf Unit To Power Down Respective Shelf Unit. Ensure **REPT RING FRAME** a **POWER ALARM** (a = 06 or 38 — HDB Cabinet Containing Shelf Unit Powered Down) Message and Audible Alarm Are Received	INST	—
28	Seat **495FA** Power Unit (Item 27)	INST	—
29	At HDB Cabinet Power Control Unit, Depress **ALARM RESET** Key To Clear Power Alarm. Ensure **REPT RING FRAME** a **POWER ALARM CLEARED** Message Is Received	INST	—
30	Seat All Circuit Boards in Shelf Unit Just Tested	INST	—
31	Repeat Items 27 Through 30 for Each Shelf Unit in HDB Cabinets 06 and 38	INST	—
32	Perform Items 33 Through 36 To Test Fan Alarms for HDB Cabinets 06 and 38	INST	—
33	At HDB Cabinet Fan Unit, Depress **OFF** Pushbutton To Turn Cooling Fans Off. Ensure **REPT RING FRAME** a **FAN ALARM** (a = 06 or 38 — HDB Cabinet Containing Fans Turned Off) Message and Audible Alarm Are Received	INST	—
34	At HDB Cabinet Fan Unit, Depress **ON/RESET** Pushbutton To Turn On Cooling Fans	INST	—
35	At HDB Cabinet Power Control Unit, Depress **ALARM RESET** Key To Clear Power Alarm. Ensure **REPT RING FRAME** a **POWER ALARM CLEARED** and **REPT RING FRAME** a **FAN ALARM CLEARED** Messages Are Received	INST	—
36	Repeat Items 33 Through 35 for Other HDB Cabinet	INST	—
37	If DCHAN Link Nodes Are To Be Equipped, Perform Items 38 and 39; Otherwise, Go to Item 40	INST	—
38	Using Office Drawing T-nnnn-Hn-407, Determine Crossconnect Assignment for Each DS-1 Line to **T1FA** Circuit for DCHAN Link Nodes To Be Grown in HDB Cabinets 06 and 38 (n = Office Unique Drawing Identification Number)	INST	—
39	At Digital Crossconnect (DSX-1) Frame, Connect Hairpin Plug (Loopback) To Loop Back Toward Link Nodes of Each DS-1 Line Determined in Item 38	INST	—
40	If CCS7 Link Nodes Are To Be Equipped, Perform Item 41; Otherwise, Go to Item 42	INST	—
41	For Each CCS7 Link Node To Be Grown in HDB Cabinets 06 and 38, Set-up Associated Digital Service Unit for Loopback (Local Line) at Digital Facility Access (DFA) Frame	INST	—
	(Continued on Page 4)		

DO THE ITEMS BELOW IN THE ORDER LISTED . . . . . FOR DETAILS, GO TO			
42	Safe Point To Temporarily Stop This Procedure. If Stopping, at MCRT, Enter Following Messages To Restore System Operation: • ALW:DMQ;SRC REX! • ALW:DMQ;SRC ADP!	TELCO/INST	—
43	If Procedure Was Stopped (Item 42), Perform Items 44 Through 48; Otherwise, Go to Item 49	TELCO	—
44	Verify System Status	TELCO	DLP-542
45	At MCRT, Enter Following Messages To Inhibit Automatic Diagnostics: • INH:DMQ;SRC REX! • INH:DMQ;SRC ADP!	TELCO	—
	NOTE: Items 46 through 48 are being performed to ensure clean file system		
46	Copy Incore Equipment Configuration Data Base (ECD) to Disk	TELCO	DLP-519
47	Run File System Audits To Ensure No File System Errors	TELCO	DLP-520
48	Update Backup Data Base	TELCO	DLP-521
49	Populate Office-Dependent Link Data Files for Each Link Node Being Equipped (Except IUNs) in HDB Cabinets 06 and 38 (Groups 06, 07, 38, and 39)	TELCO	DLP-543
	NOTES: 1. Link nodes will be added to HDB cabinet 06 first 2. Lowest numbered equipped link node in HDB cabinet 06 (LN06 2) will interface with highest numbered equipped link node in RN cabinet 00. Highest numbered equipped link node in HDB cabinet (LN07 7) will interface with lowest numbered equipped link node in RN cabinet 32 3. Interframe buffer (IFB) in RN cabinet 00, that interfaces with HDB cabinet 06, will be changed from **TN915** to **TN918** or **TN1508** 4. IFB in RN cabinet 32, that interfaces with HDB cabinet 06, will be changed from **TN915** to **TN1506** or **TN1509** 5. Figure for Phase 1 in DLP-545 shows the configuration after HDB cabinet 06 is grown		
50	Determine Highest Numbered Link Node Containing an IFB in RN Cabinet 00	TELCO	—
51	If Link Node (Item 50) Is CCS7 or DCHAN, Perform Items 52 and 53; Otherwise, Go to Item 54	TELCO	—
52	Notify Users on Link Node (Item 50) That Their Signaling Link Will Be Temporarily Down	TELCO	—

DO THE ITEMS BELOW IN THE ORDER LISTED . . . . . FOR DETAILS, GO TO			
53	Change Active Signaling Link(s) in Link Node (Item 50) to MOOS [Record Signaling Link(s) That Was Changed for Later Use]	TELCO	DLP-526
54	At MCRT, Enter Message **OP:RING;DETD!** and Ensure No **"i"** Is Listed for Any Link Node (i = Isolated). Only One Area on CNI Ring Can Be Isolated at a Time. If Any Link Node Is Isolated, That Link Node Will Have To Be Restored Before Continuing	TELCO	—
55	Enter Message **RMV:LNOO** a! (a = Link Node Determined in Item 50) and Ensure **RING RMV LNOO** a **COMPLETED** Message Is Received	TELCO	—
56	Enter Message **RMV:RPCN32 O!** and Ensure **RING RMV RPCN32 O COMPLETED** Message Is Received	TELCO	—
57	Enter Message **CFR:RING,RPCN32 O;EXCLUDE!** To Isolate Nodes (Items 55 and 56) From Active Ring. Ensure **RING CFR RING RPCN32 O COMPL** Message Is Received	TELCO	DLP-539
58	Ensure **TN918** or **TN1508** IFB Circuit Pack Is Installed in Lowest Numbered Link Node in HDB Cabinet 06	INST	—
59	Ensure **TN1506** or **TN1509** IFB Circuit Pack Is Installed in Highest Numbered Link Node in HDB Cabinet 06	INST	—
60	Replace IFB Circuit Pack on Highest Numbered Link Node in RN Cabinet 00 With **TN918** or **TN1508** IFB Circuit Pack (IFB To Be Installed Must Be Same Type Installed in Lowest Numbered Link Node in HDB Cabinet 06 [Item 58])	INST	—
61	Replace IFB Circuit Pack on RPCN in RN Cabinet 32 With **TN1506** or **TN1509** Circuit Pack (IFB To Be Installed Must Be Same Type Installed in Highest Numbered Link Node in HDB Cabinet 06 [Item 59])	INST	—
62	Connect Balanced (Interframe) Cables From HDB Cabinet 06 to RN Cabinets 00 and 32	INST	—
63	Recent Change Nodes (Items 55 and 56) to UNEQIP (Do Not Exit Recent Change)	TELCO	DLP-540
64	Recent Change hv Value of Nodes (Items 55 and 56) to a Value Associated With IFB Type of **TN918/TN1508** for Node in RN Cabinet 00 and **TN1506/TN1509** for Node in RN Cabinet 32 and RI Type Equipped in Nodes Being Recent Changed and Change Major Status to GROW (Do Not Exit Recent Change)	TELCO	DLP-527
65	Recent Change Growth Link Nodes in HDB Cabinet 06 (Groups 06 and 07) From UNEQIP to GROW and hv, mv, and packcode Values, as Required (Exit Recent Change)	TELCO	DLP-541
66	At MCRT, Enter **101** in Command Mode To Obtain Display Page 101	TELCO	—

DO THE ITEMS BELOW IN THE ORDER LISTED . . . . . FOR DETAILS, GO TO			
67	Enter Message **DGN:LNOO** a**;RAW!** (a = Link Node Determined in Item 50); No Diagnostic Failures Allowed on Phases Run. Wait for **DGN LNOO** a **CATP (X'OOOOOOOO X'4OOOOOOO) MSG COMPLETE** Message	TELCO/INST	—
68	Enter Message **DGN:RPCN32 O;RAW!**; No Diagnostic Failures Allowed on Phases Run. Wait for **DGN RPCN32 O CATP (X'OOOOOOOO X'4OOOOOOO) MSG COMPLETE** Message	TELCO/INST	—
69	Recent Change Nodes (Items 55 and 56) to OOS (Exit Recent Change)	TELCO	DLP-528
70	At **T1FA** Circuit Pack in HDB Cabinet O6, Depress Reset Button To Avoid Failing Phase 29 (LEDs Go Off, Then Green LED Goes On for Short Period Then Off. When Green LED Goes Off, Red LED Goes On)	INST	—
71	At MCRT, Enter Message **DGN:LN**a b**;RAW!** (a = **O6** for Group O6 or **O7** for Group O7, b = Link Node Member Number) for Growth Link Node; No Diagnostic Failures Allowed on Phases Run. Wait for **DGN LN**a b **CATP (X'OOOOOOOO X'4OOOOOOO) MSG COMPLETE** Message	TELCO/INST	—
72	Repeat Item 71 for Each Growth Link Node in HDB Cabinet O6 (Groups O6 and O7)	TELCO/INST	—
73	Recent Change All Growth Link Nodes in HDB Cabinet O6 (Groups O6 and O7) to OOS (Exit Recent Change)	TELCO	DLP-528
74	At MCRT, Enter Message **RST:LNOO** a**;UCL!** (a = Link Node Determined in Item 50) To Restore Link Node Unconditionally; Ensure **RING RST LNOO** a **COMPLETED** Message Is Received	TELCO/INST	DLP-531
75	If Active Signaling Link(s) Was Changed to MOOS in Item 53, Perform Items 76 and 77; Otherwise, Go to Item 78	TELCO	—
76	Change Signaling Link(s) (Item 53) to IS	TELCO	DLP-529
77	Notify Users on Link Node (Item 74) To Resume Their Activities	TELCO	—
78	At MCRT, Enter Message **RST:RPCN32 O;UCL!** To Restore RPCN Unconditionally; Ensure **RING RST RPCN32 O COMPLETED** Message Is Received	TELCO/INST	DLP-531
79	Enter Message **RST:LN**a b**;UCL!** (a = **O6** for Group O6 or **O7** for Group O7, b = Link Node Member Number) To Restore Growth Link Node Unconditionally; Ensure **RING RST LN**a b **COMPLETED** Message Is Received	TELCO/INST	DLP-531
80	Repeat Item 79 For Each Growth Link Node in HDB Cabinet O6 (Groups O6 and O7)	TELCO/INST	—
	(Continued on Page 7)		

DO THE ITEMS BELOW IN THE ORDER LISTED . . . . . FOR DETAILS, GO TO			
81	At MCRT, Enter Message **OP:RING;DETD!**. Ensure No **"i"** Is Listed for Any Link Node (i = Isolated). If Segment Is Isolated, Enter Message **CFR:RING!**. Ensure **NORMAL CONFIGURATION, NO NODES ISOLATED** Message Is Received	TELCO	—
82	Enter Following Messages To Allow Automatic Diagnostics: • **ALW:DMQ;SRC REX!** • **ALW:DMQ;SRC ADP!**	TELCO	—
83	Copy Incore Equipment Configuration Data Base (ECD) to Disk	TELCO	DLP-519
84	Soak Growth HDB Cabinet for 12 Hours To Ensure No Problems Exist With System Operation After Growth	TELCO/INST	—
85	Verify System Status	TELCO	DLP-542
86	At MCRT, Enter Following Messages To Inhibit Automatic Diagnostics: • **INH:DMQ;SRC REX!** • **INH:DMQ;SRC ADP!**	TELCO	—
	NOTE: Items 87 through 89 are being performed to ensure clean file system before starting growth		
87	Copy Incore Equipment Configuration Data Base (ECD) to Disk	TELCO	DLP-519
88	Run File System Audits To Ensure No File System Errors	TELCO	DLP-520
89	Update Backup Data Base	TELCO	DLP-521
	NOTES: 1. Link nodes will be added in HDB cabinet 38 next 2. Lowest numbered equipped link node in HDB cabinet 38 will interface with highest numbered equipped link node in RN cabinet 32. Highest numbered equipped link node in HDB cabinet 38 will interface with lowest numbered equipped link node in RN cabinet 00 3. IFB in RC cabinet 00, that interfaces with HDB cabinet 38, will be changed to **TN1506** or **TN1509** 4. IFB in RN cabinet 32, that interfaces with HDB cabinet 38, will be changed to **TN918** or **TN1508** 5. Figure for Phase 2 in DLP-545 shows the configuration after HDB 38 is grown		
90	Determine Highest Numbered Link Node Containing an IFB in RN Cabinet 32	TELCO	—

DO THE ITEMS BELOW IN THE ORDER LISTED			FOR DETAILS, GO TO
91	If Link Node (Item 90) Is CCS7 or DCHAN, Perform Items 92 and 93; Otherwise, Go to Item 94	TELCO	—
92	Notify Users on Link Node (Item 90) That Their Signaling Link Will Be Temporarily Down	TELCO	—
93	Change Active Signaling Link(s) in Link Node (Item 90) to MOOS [Record Signaling Link(s) That Was Changed for Later Use]	TELCO	DLP-526
94	At MCRT, Enter Message **OP:RING;DETD!** and Ensure No **"i"** Is Listed for Any Link Node (i = Isolated). Only One Area on CNI Ring Can Be Isolated at a Time. If Any Link Node Is Isolated, That Link Node Will Have To Be Restored Before Continuing	TELCO	—
95	Enter Message **RMV:LN32** a! (a = Link Node Determined in Item 90) and Ensure **RING RMV LN32** a **COMPLETED** Message Is Received	TELCO	—
96	Enter Message **RMV:RPCNOO O!** and Ensure **RING RMV RPCNOO O COMPLETED** Message Is Received	TELCO	—
97	Enter Message **CFR:RING,RPCNOO O;EXCLUDE!** To Isolate Nodes (Items 95 and 96) From Active Ring. Ensure **RING CFR RING RPCNOO O COMPL** Message Is Received	TELCO	DLP-539
98	Ensure **TN918** or **TN1508** IFB Circuit Pack Is Installed in Lowest Numbered Link Node in HDB Cabinet 38	INST	—
99	Ensure **TN1506** or **TN1509** IFB Circuit Pack Is Installed in Highest Numbered Link Node in HDB Cabinet 38	INST	—
100	Replace IFB Circuit Pack on Highest Numbered Link Node in RN Cabinet 32 With **TN918** or **TN1508** IFB Circuit Pack (IFB To Be Installed Must Be Same Type Installed in Lowest Numbered Link Node in HDB Cabinet 38 [Item 98])	INST	—
101	Replace IFB Circuit Pack on RPCN in RN Cabinet OO With **TN1506** or **TN1509** Circuit Pack (IFB To Be Installed Must Be Same Type Installed in Highest Numbered Link Node in HDB Cabinet 38 [Item 99])	INST	—
102	Connect Balanced (Interframe) Cables From HDB Cabinet 38 to RN Cabinets OO and 32	INST	—
103	Recent Change Nodes (Items 95 and 96) to UNEQIP (Do Not Exit Recent Change)	TELCO	DLP-540
104	Recent Change hv Value of Nodes (Items 95 and 96) to a Value Associated With IFB Type of **TN918/TN1508** for Node in RN Cabinet 32 and **TN1506/TN1509** for Node in RN Cabinet OO and RI Type Equipped in Nodes Being Recent Changed and Change Major Status to GROW (Do Not Exit Recent Change)	TELCO	DLP-527

DO THE ITEMS BELOW IN THE ORDER LISTED . . . . . FOR DETAILS, GO TO			
105	Recent Change Growth Link Nodes in HDB Cabinet 38 (Groups 38 and 39) From UNEQIP to GROW and hv, mv, and packcode Values, as Required (Exit Recent Change)	TELCO	DLP-541
106	At MCRT, Enter **101** in Command Mode To Obtain Display Page 101	TELCO	—
107	Enter Message **DGN:LN32** a**;RAW!** (a = Link Node Determined in Item 90); No Diagnostic Failures Allowed on Phase Run. Wait For **DGN LN32** a **CATP (X'00000000 X'40000000) MSG COMPLETE** Message	TELCO/INST	—
108	Enter Message **DGN:RPCN00 0;RAW!**; No Diagnostic Failures Allowed on Phases Run. Wait for **DGN RPCN00 0 CATP (X'00000000 X'40000000) MSG COMPLETE** Message	TELCO/INST	—
109	Recent Change Nodes (Items 95 and 96) to OOS (Exit Recent Change)	TELCO	DLP-528
110	At **T1FA** Circuit Pack in HDB Cabinet 38, Depress Reset Button To Avoid Failing Phase 29 (LEDs Go Off, Then Green LED Goes On for Short Period Then Off. When Green LED Goes Off, Red LED Goes On)	INST	—
111	At MCRT, Enter Message **DGN:LN**a b**;RAW!** (a = **38** for Group 38 or **39** for Group 39, b = Link Node Member Number) for Growth Link Node; No Diagnostic Failures Allowed on Phases Run. Wait for **DGN LN**a b **CATP (X'00000000 X'40000000) MSG COMPLETE** Message	TELCO/INST	—
112	Repeat Item 111 for Each Growth Link Node in HDB Cabinet 38 (Groups 38 and 39)	TELCO/INST	—
113	Recent Change All Growth Link Nodes in HDB Cabinet 38 (Groups 38 and 39) to OOS (Exit Recent Change)	TELCO	DLP-528
114	At MCRT, Enter Message **RST:LN32** a**;UCL!** (a = Link Node Determined in Item 90) To Restore Link Node Unconditionally; Ensure **RING RST LN32** a **COMPLETED** Message Is Received	TELCO/INST	DLP-531
115	If Active Signaling Link(s) Was Changed to MOOS In Item 93, Perform Items 116 and 117; Otherwise, Go to Item 118	TELCO	—
116	Change Signaling Link(s) (Item 93) to IS	TELCO	DLP-529
117	Notify Users on Link Node (Item 114) To Resume Their Activities	TELCO	—
118	At MCRT, Enter Message **RST:RPCN00 0;UCL!** To Restore RPCN Unconditionally; Ensure **RING RST RPCN00 0 COMPLETED** Message Is Received	TELCO/INST	DLP-531
	(Continued on Page 10)		

DO THE ITEMS BELOW IN THE ORDER LISTED . . . . . FOR DETAILS, GO TO			
119	Enter Message **RST:LN**a b**;UCL!** (a = **38** for Group 38 or **39** for Group 39, b = Link Node Member Number) To Restore Growth Link Node Unconditionally; Ensure **RING RST LN**a b **COMPLETED** Message Is Received	TELCO/INST	DLP-531
120	Repeat Item 119 for Each Growth Link Node in HDB Cabinet 38 (Groups 38 and 39)	TELCO/INST	—
121	At MCRT, Enter Message **OP:RING;DETD!**. Ensure No **"i"** Is Listed for Any Link Node (i = Isolated). If Segment Is Isolated, Enter Message **CFR:RING!**. Ensure **NORMAL CONFIGURATION, NO NODES ISOLATED** Message Is Received	TELCO	—
122	Enter Following Messages To Allow Automatic Diagnostics: • **ALW:DMQ;SRC REX!** • **ALW:DMQ;SRC ADP!**	TELCO	—
123	Copy Incore Equipment Configuration Data Base (ECD) to Disk	TELCO	DLP-519
124	Soak Growth HDB Cabinet for 12 Hours To Ensure No Problems Exist With System Operation After Growth	TELCO/INST	—
125	If Signaling Links Are To Be Activated, Perform Activate Signaling Link in Existing Link Node Procedure. End of Procedure Upon Completion	TELCO	—
126	Run File System Audits To Ensure No File System Errors	TELCO	DLP-520
127	Update Backup Data Base	TELCO	DLP-521
128	Write 3B Computer Backup Tapes	TELCO	DLP-522
129	Verify Backup Tapes	TELCO	DLP-525

DO THE ITEMS BELOW IN THE ORDER LISTED . . . . . FOR DETAILS, GO TO

		RESPONSIBILITY	
	WARNING: An antistatic wrist strap must be worn to prevent electrostatic discharge and possible damage to circuit packs while handling		
	NOTES: 1. This procedure should be performed during light traffic periods 2. This procedure contains a soak interval for verifying system operation and stability during growth. During the soak interval, all abnormal conditions (such as interrupts, interjects and diagnostic failures related to growth) must be investigated and resolved immediately. Growth equipment, being soaked, must be error free for at least 12 hours. **No other growth activity can take place until this soak is complete** 3. Throughout this procedure, the following term, **LNxx yy**, is used where: **xx = Group Number** **yy = Member Number**		
1	Ensure Room Is Available for Growth Link Node(s) in the Ring Node Cabinet (RNC)	INST	—
2	Ensure All Cables and Circuit Packs for Growth Link Node(s) Are Available	INST	—
3	Verify System Status	TELCO	DLP-542
4	Perform Preliminary Installation Activities	INST	—
5	Safe Point To Temporarily Stop This Procedure	TELCO	—
6	If Procedure Was Stopped in Item 6, Verify System Status	TELCO	DLP-542
7	At MCRT, Enter Following Messages To Inhibit Automatic Diagnostics: • INH:DMQ;SRC REX! • INH:DMQ;SRC ADP!	TELCO	—
8	Perform the Following To Ensure Clean File System Before Starting Growth:		
	1. Copy Incore Equipment Configuration Data Base (ECD) to Disk	TELCO	DLP-519
	2. Run File System Audits To Ensure No File System Errors	TELCO	DLP-520
	3. Update Backup Data Base	TELCO	DLP-521
	(Continued on Page 2)		

DO THE ITEMS BELOW IN THE ORDER LISTED . . . . . FOR DETAILS, GO TO			
	NOTE: Only link nodes associated with one shelf unit can be grown prior to entering the soak interval. If there are other link nodes to be grown into another shelf unit, this procedure must be repeated		
9	If Growth Link Node(s) Will Be the First Node(s) To Be Equipped on the Shelf Unit, the Interframe Buffer (IFB) Will Have To Be Moved From the Adjacent Lower Shelf:		
	1. Enter **1106** in Command Mode To Obtain the 1106 Display Page	TELCO	—
	2. Using the 1106 Page, Determine the Number of the Next Node Lower Than the Growth Node(s)	TELCO	—
	3. If the Link Node Determined in Item 9.2 Is CCS7, or DCHAN:		
	A. Notify Users on the Link Node Determined in Item 9.2 That Their Signaling Links Will Be Temporarily Removed From Service	TELCO	—
	B. Change Active Signaling Link(s) on the Link Node Determined in Item 9.2 to MOOS [Record Modified Signaling Link(s) for Later Use]	TELCO	DLP-526
	4. At MCRT, Enter Message **RMV:LNxx yy!** To Remove Link Nodes in Item 9.2	TELCO	—
10	Enter Message **CFR:RING,LNxx yy;EXCLUDE!** To Isolate the Growth Link Node(s)	TELCO	DLP-536
11	If the IFB Needs To Be Moved, as Determined in Item 9, Perform the Following:		
	1. IFB Pack Is Required To Be Moved From the Node in Item 9.2 to the Highest Growth Link Node in the Cabinet	INST	—
	2. Recent Change the Link Node That the IFB Was Moved From, to UNEQIP (Do Not Exit Recent Change)	TELCO	DLP-540
	3. Recent Change the hv Value for the Link Node in Item 9.2 and Change the MAJOR State to Grow (Do Not Exit Recent Change)	TELCO	DLP-527
	4. Recent Change the Link Node in Item 9.2 to OOS (Do Not Exit Recent Change)	TELCO	DLP-528
12	Determine Node-Specific Data for All Growth Nodes	TELCO	DLP-554
13	Recent Change the Node-Specific Variables as Described in DLP-558 (Do Not Exit Recent Change)	TELCO	DLP-552
14	Recent Change Each Growth Node From UNEQIP to GROW	TELCO	DLP-553
	(Continued on Page 3)		

DO THE ITEMS BELOW IN THE ORDER LISTED . . . . . FOR DETAILS, GO TO			
15	Connect Unbalanced (Intraframe) Bus Cables and Balanced (Interframe) Bus Cables as Required for Growth Link Node(s)	INST	—
16	Seat Circuit Boards:		
	1. SSI RNC:		
	• Seat NP, RI1, and RIO	INST/TELCO	—
	2. HD RNC:		
	• Seat IRN2 or IRNB	INST/TELCO	—
17	If a Link Node Was Removed in Item 9.4, Perform the Following for That Node:		
	1. At the MCRT, Enter Message **RST:LNxx yy!**	TELCO	—
	2. If the Link Node Just Restored Was CCS7, or DCHAN:		
	A. Change Signaling Link(s) Recorded in Item 9.3 to IS	TELCO	DLP-529
	B. Notify Users on the Link(s) Just Restored to Service To Resume Their Activities	TELCO	—
18	Enter Message **DGN:LNxx yy;RAW!** To Diagnose Each Growth Link Node. No Diagnostic Failures Are Allowed	TELCO	—
19	Recent Change Each Growth Link Node From GROW to OOS	TELCO	DLP-509
20	Enter Message **CFR:RING!** To Return Ring Configuration to Normal State	TELCO	DLP-530
21	At MCRT, If 1106 Page Is Not Displayed, Enter **1106** in Command Mode	TELCO	—
22	Enter Message **RST:LNxx yy;UCL!** To Unconditionally Restore Each Growth Link Node	TELCO/INST	DLP-531
23	Copy Incore ECD to Disk	TELCO	DLP-519
24	At MCRT, Enter Following Messages To Allow Automatic Diagnostics: • **ALW:DMQ;SRC REX!** • **ALW:DMQ;SRC ADP!**	TELCO	—
25	Run File System Audits To Ensure No File System Errors	TELCO	DLP-520
26	Update Backup Data Base	TELCO	DLP-521
	(Continued on Page 4)		

DO THE ITEMS BELOW IN THE ORDER LISTED . . . . . FOR DETAILS, GO TO			
27	Soak Growth Ring Hardware for a Minimum of 12 Hours To Ensure That No Problems Exist With System Operation. If Problems Are Identified, Resolve Before Continuing Any Other Activities	TELCO	—
28	Following Completion of All Growth Activities for This Job:		
	1. Write 3B Computer Backup Tapes	TELCO	DLP-522
	2. Verify Backup Tapes	TELCO	DLP-525

DO THE ITEMS BELOW IN THE ORDER LISTED . . . . . FOR DETAILS, GO TO

		RESPONSIBILITY	
	WARNING: An antistatic wrist strap must be worn to prevent electrostatic discharge and possible damage to circuit packs while handling		
	NOTES: 1. If 3B Interface Unit containing growth DLN will be highest equipped shelf unit, the other link node will also have to be grown. This link node must be grown as an IUN 2. AMA data should be transferred (tape and/or teleprocessing) prior to start of each night's growth activity 3. This procedure must be performed during light traffic periods 4. This procedure contains soak intervals for verifying system operation and stability during growth. During the soak interval, all abnormal conditions (such as interrupts, interjects, and diagnostic failures related to growth) must be investigated and resolved immediately. Growth equipment, being soaked, must be error free for at least the time specified		
1	Ensure All Cables and Circuit Packs for Growth DLNs and Growth IUNs (if Required) Are Available	INST	—
2	Ensure ***4ESS***™ Switch Is Running on 4E<13> or Later Generic and AT&T 3B Computer Is Running on 4AP<7> or Later Generic	TELCO	—
3	At MCRT, Enter 1106 in Command Mode To Obtain Display Page 1106	TELCO	—
4	Enter 600 in Command Mode To Obtain Group Display 00	TELCO	—
5	Ensure Member Number of Growth DLN Is Not Assigned as an Equipped Link Node in RN Cabinet 00 (DLN Will Not Be Displayed on 1106 Page When Unequipped)	TELCO	—
6	Enter 632 in Command Mode To Obtain Group Display 32	TELCO	—
7	Ensure Member Number of Growth DLN Is Not Assigned as an Equipped Link Node in RN Cabinet 32 (DLN Will Not Be Displayed on 1106 Page When Unequipped)	TELCO	—
8	If Growth Associated Link Node(s) in Ring Node (RN) Cabinet 00 Meets Any of the Following Criteria, Record Affected Link Node Member Number and Make Arrangements With Users for Temporary Stoppage When Their Link Node Is Removed:		
	A. Shelf Unit Is Being Grown As Highest Shelf Unit in RN Cabinet and Next Lower Numbered Link Node is CCS7, or DCHAN Type	TELCO	—
	(Item 8 Is Continued on Next Page)		

DO THE ITEMS BELOW IN THE ORDER LISTED . . . . . FOR DETAILS, GO TO			
8 (Contd)	B. Shelf Unit Is Being Grown Between Two Equipped Shelf Units:		
	1. Next Lower Numbered Link Node From Growth Shelf Unit Contains an Interframe Buffer (IFB) and Link Node Is CCS7, or DCHAN Type	TELCO	—
	2. Next Higher Numbered Link Node From Growth Shelf Unit Contains an IFB and Link Node Is CCS7, or DCHAN Type	TELCO	—
9	Repeat Item 8 for Growth Shelf Unit in RN Cabinet 32	TELCO	—
10	Verify System Status	TELCO/INST	DLP-542
11	Perform Preliminary Installation Activities	INST	—
12	Safe Point To Temporarily Stop This Procedure	INST	—
13	Verify System Status	TELCO/INST	DLP-542
14	At MCRT, Enter Following Messages To Inhibit Automatic Diagnostics: • INH:DMQ;SRC REX! • INH:DMQ;SRC ADP!	TELCO	—
	NOTE: Items 15 through 17 are being performed to ensure clean file system before starting growth		
15	Copy Incore Equipment Configuration Data Base (ECD) to Disk	TELCO	DLP-519
16	Run File System Audits To Ensure No File System Errors	TELCO	DLP-520
17	Update Backup Data Base	TELCO	DLP-521
18	At RN Cabinets 00 and 32, Ensure All Circuit Boards and **495FA** Power Units in Growth Shelf Unit Are Unseated	INST	—
19	Install Fuses, as Required	INST	—
20	Seat All **495FA** (Item 18) Power Units (Do Not Reseat Circuit Boards)	INST	—
21	Depress **ALARM RESET** Key on Each RN Cabinet Power Control Unit To Clear Power Alarm	TELCO	—
22	At MCRT, Depress **ALM RLS** (**PF4**) Key To Silence Audible Alarm	TELCO	—
23	Seat All Circuit Boards in Growth Shelf Unit in Both RN Cabinets	INST	—
24	Verify Current 3B Computer DMA Channel 12 Configuration	TELCO	DLP-537

DO THE ITEMS BELOW IN THE ORDER LISTED . . . . . FOR DETAILS, GO TO			
	NOTE: DLN and IUN, if required, will be grown in RN cabinet 00 first		
25	At MCRT, Enter Message **INH:AUD:ALL!** To Inhibit All 3B Computer Audits	TELCO	—
26	Initiate Processes To Define New audinst, mdct, and base ucb Records for Growth DLN in RN Cabinet 00	TELCO	DLP-538
27	At MCRT, Enter Message **ALW:AUD:ALL!** To Allow Audits	TELCO	—
28	Depress **EA DISP** (**PF1**) Key	TELCO	—
29	If CU 0 or CU 1 Is Forced On Line (**FONL**), Enter 13 (**CLR-FONL**) in Command Mode To Clear Force	TELCO	—
30	At Power Switch, Remove From Service and Power Down CU 0	TELCO	DLP-500
31	Connect Dual Serial Channel Cable Between Growth DLN and CU 0	INST	—
32	Recent Change Dual Serial Channel 12 From **0x3f** to **0x7f** To Equip Port 6 for CU 0	TELCO	DLP-508
33	Power Up and Restore to Service CU 0	TELCO/INST	DLP-501
34	Soak CU 0 as Standby CU for 15 Minutes	TELCO/INST	—
35	At MCRT, Enter Message **SW:CU!** To Make CU 0 Active	TELCO	—
36	Soak CU 0 as Active CU for at Least 1 Hour	TELCO/INST	—
37	Safe Point To Temporarily Stop This Procedure. If Stopping, at MCRT, Enter Following Messages To Restore System Operation: • ALW:DMQ;SRC REX! • ALW:DMQ;SRC ADP!	TELCO/INST	—
38	If Procedure Was Stopped (Item 37), Perform Items 39 Through 43; Otherwise, Go to Item 44	TELCO	—
39	Verify System Status	TELCO	DLP-542
40	At MCRT, Enter Following Messages To Return System to Pre-Stoppage State: • INH:DMQ;SRC REX! • INH:DMQ;SRC ADP!	TELCO	—
	(Continued on Page 4)		

DO THE ITEMS BELOW IN THE ORDER LISTED . . . . . FOR DETAILS, GO TO			
	NOTE: Items 41 through 43 are being performed to ensure clean file system		
41	Copy Incore Equipment Configuration Data Base (ECD) to Disk	TELCO	DLP-519
42	Run File System Audits To Ensure No File System Errors	TELCO	DLP-520
43	Update Backup Data Base	TELCO	DLP-521
44	At MCRT, Depress **EA DISP** (**PF1**) Key	TELCO	—
45	If CU 0 or CU 1 Is Forced On Line (**FONL**), Enter 13 (**CLR-FONL**) in Command Mode To Clear Force	TELCO	—
46	At Power Switch, Remove From Service and Power Down CU 1	TELCO	DLP-500
47	Connect Dual Serial Channel Cable Between Growth DLN and CU 1	INST	—
48	Recent Change Dual Serial Channel 12 From **0x3f** to **0x7f** To Equip Port 6 for CU 1	TELCO	DLP-508
49	Power Up and Restore to Service CU 1	TELCO/INST	DLP-501
50	Soak CU 1 as Standby CU for 15 Minutes	TELCO/INST	—
51	At MCRT, Enter Message **SW:CU!** To Make CU 1 Active	TELCO	—
52	Soak CU 1 as Active CU for at Least 1 Hour	TELCO/INST	—
53	Safe Point To Temporarily Stop This Procedure. If Stopping, at MCRT, Enter Following Messages To Restore System Operation: • ALW:DMQ;SRC REX! • ALW:DMQ;SRC ADP!	TELCO/INST	—
54	If Procedure Was Stopped (Item 53), Perform Items 55 Through 59; Otherwise, Go to Item 60	TELCO	—
55	Verify System Status	TELCO	DLP-542
56	At MCRT, Enter Following Messages To Return System to Pre-Stoppage State: • INH:DMQ;SRC REX! • INH:DMQ;SRC ADP!	TELCO	—
	NOTE: Items 57 through 59 are being performed to ensure clean file system		
57	Copy Incore Equipment Configuration Data Base (ECD) to Disk	TELCO	DLP-519

DO THE ITEMS BELOW IN THE ORDER LISTED . . . . . FOR DETAILS, GO TO			
58	Run File System Audits To Ensure No File System Errors	TELCO	DLP-520
59	Update Backup Data Base	TELCO	DLP-521
60	At MCRT, Enter Message **OP:RING;DETD!** and Ensure No **"i"** Is Listed for Any Link Node (i = Isolated). Only One Area on CNI Ring Can Be Isolated at a Time. If Any Link Node Is Isolated, That Link Node Will Have To Be Restored Before Continuing	TELCO	—
61	If Growth Shelf Unit Will Be Highest Equipped Shelf Unit in RN Cabinet, Go To Item 68	TELCO	—
62	If Shelf Unit Is Being Grown Between Two Equipped Link Nodes That Contain IFBs, Perform Items 63 Through 72; Otherwise, Go to Item 73	TELCO	—
63	Determine Next Higher Equipped Link Node Number to Growth Shelf Unit	TELCO	—
64	If Link Node Determined in Item 63 Meets the Criteria in Item 8.B.2, Perform Items 65 and 66; Otherwise, Go to Item 67	TELCO	—
65	Notify Users on Link Node Determined in Item 63 That Their Signaling Link Will Be Temporarily Down	TELCO	—
66	Change Active Signaling Link(s) in Link Node Determined in Item 63 to MOOS (Record Signaling Link(s) That Was Changed for Later Use)	TELCO	DLP-526
67	At MCRT, Enter Message **RMV:LNOO** a! for Link Node Determined in Item 63. Ensure **RING RMV LNOO** a **COMPLETED** Message Is Received	TELCO	—
68	Determine Next Lower Equipped Link Node Number to Growth Shelf Unit	TELCO	—
69	If Link Node Determined in Item 68 Meets the Criteria in Item 8.A or 8.B.1, Perform Items 70 and 71; Otherwise, Go to Item 72	TELCO	—
70	Notify Users on Link Node Determined in Item 68 That Their Signaling Link Will Be Temporarily Down	TELCO	—
71	Change Active Signaling Link(s) in Link Node Determined in Item 68 to MOOS (Record Signaling Link(s) That Was Changed for Later Use)	TELCO	DLP-526
72	At MCRT, Enter Message **RMV:LNOO** a! for Link Node Determined in Item 68. Ensure **RING RMV LNOO** a **COMPLETED** Message Is Received	TELCO	—
73	Enter Message **CFR:RING,LNOO** a**;EXCLUDE!** (a = Member Number of One Link Node Removed in Item 67 or 72) To Isolate Growth Area From Active Ring	TELCO	DLP-539

DO THE ITEMS BELOW IN THE ORDER LISTED . . . . . FOR DETAILS, GO TO			
74	Recent Change hv Value for Removed Link Node(s) per A or B Below:		
	NOTE: If existing DLN is to be recent changed, RPCD must also be recent changed. The DLPs must be followed to determine proper sequence		
	A. If Only One Link Node Was Removed (Item 67 or 72):		
	1. Recent Change Removed Link Node to UNEQIP (Do Not Exit Recent Change)	TELCO	DLP-540
	2. Recent Change hv Value to a Value Associated With No IFB and Ring Interface (RI) Type Equipped in Removed Link Node and Change Major Status to GROW (Exit Recent Change)	TELCO	DLP-527
	B. If Two Link Nodes Were Removed (Items 67 and 72):		
	1. Recent Change Both Removed Link Nodes to UNEQIP (Do Not Exit Recent Change)	TELCO	DLP-540
	2. Recent Change hv Value to a Value Associated With No IFB and RI Type Equipped in Both Removed Link Nodes and Change Major Status to GROW (Exit Recent Change)	TELCO	DLP-527
75	At MCRT, Enter **1106** in Command Mode To Obtain Display Page 1106	TELCO	—
76	Enter **600** in Command Mode	TELCO	—
77	Ensure 1106 Page Displays Removed Link Node(s) in GROW State	TELCO	—
78	Remove IFB Circuit Board, as Required, From Removed Link Node(s) and Install an IFB in Growth IUN, If required	INST	—
	NOTE: Growth DLN requires both RPCD and LN ucb entries and must be updated in that order		
79	Recent Change Growth DLN and IUN, if Being Grown, From UNEQIP to GROW and hv, mv, and Packcode Values, as Required, (Exit Recent Change)	TELCO	DLP-541
80	At MCRT, Enter **1106** in Command Mode To Obtain Display Page 1106	TELCO	—
81	Enter **600** in Command Mode	TELCO	—
82	Ensure 1106 Page Displays Growth DLN and IUN, if Grown, in GROW State	TELCO	—
83	Connect Unbalanced (Intraframe) Cables and Balanced (Interframe) Cables, if Required, for Growth DLN and IUN	INST	—
	(Continued on Page 7)		

DO THE ITEMS BELOW IN THE ORDER LISTED . . . . . FOR DETAILS, GO TO			
84	Recent Change Removed Link Node(s) to OOS and Restore per A or B Below:		
	A. If Only One Link Node Was Removed (Item 67 or 72):		
	1. Recent Change Removed Link Node to OOS (Exit Recent Change)	TELCO	DLP-528
	2. At MCRT, Enter Message **RST:LNOO** a! To Restore Removed Link Node. Ensure **RING RST LNOO** a **COMPLETED** Message Is Received	TELCO/INST	—
	B. If Two Link Nodes Were Removed (Items 67 and 72):		
	1. Recent Change Both Removed Link Nodes to OOS (Exit Recent Change)	TELCO	DLP-528
	2. At MCRT, Enter Message **RST:LNOO** a! for Each Removed Link Node. Ensure **RING RST LNOO** a **COMPLETED** Message Is Received	TELCO/INST	—
85	If Link Node(s) That Was Restored (Item 84) Is CCS7, or DCHAN, Perform Items 86 and 87; Otherwise, Go to Item 88	TELCO	—
86	Change All Signaling Links (Recorded in Items 66 and/or 71) to IS	TELCO	DLP-529
87	Notify User(s) on Link Node(s) That Was Restored (Item 84) To Resume Their Activities	TELCO	—
88	At MCRT, Enter Message **DGN:LNOO** a**;RAW**! (a = Growth DLN Member Number); No Diagnostic Failures Allowed on Phases Run. Wait for **DGN LNOO** a **CATP (X'00000000 X'40000000) MSG COMPLETE** Message	TELCO/INST	—
89	If IUN Is Being Grown With Growth DLN, Enter Message **DGN:LNOO** a**;RAW**! (a = Growth IUN Member Number); No Diagnostic Failures Allowed on Phases Run. Wait for **DGN LNOO** a **CATP (X'00000000 X'40000000) MSG COMPLETE** Message	TELCO/INST	—
90	Enter Message **SW:CU**! To Switch CUs	TELCO	—
91	Enter Message **DGN:LNOO** a**;RAW**! (a = Growth DLN Member Number); No Diagnostic Failures Allowed on Phases Run. Wait for **DGN LNOO** a **CATP (X'00000000 X'40000000) MSG COMPLETE** Message	TELCO/INST	—
92	Recent Change Growth DLN and IUN, if Being Grown, to OOS (Exit Recent Change)	TELCO	DLP-528
93	At MCRT, Enter **1106** in Command Mode To Obtain Display Page 1106	TELCO	—
94	Enter **600** in Command Mode To Obtain Group Display 00	TELCO	—
95	Ensure 1106 Page Displays Growth DLN and Growth IUN, if Being Grown, in OOS State	TELCO	—

DO THE ITEMS BELOW IN THE ORDER LISTED . . . . . FOR DETAILS, GO TO			
96	Restore Growth DLN Unconditionally (**RST:LNOO** a**;UCL!**)	TELCO/INST	DLP-557
97	If IUN Is Being Grown With Growth DLN, Restore Growth IUN Unconditionally (**RST:LNOO** a**;UCL!**). Ensure **RST LNOO** a **COMPLETED** Message Is Received	TELCO/INST	DLP-531
98	Verify API-DLN Stream Status (**OP:DLNCM;STREAM!**)	TELCO/INST	DLP-513
99	At MCRT, Depress **EA DISP** (**PF1**) Key	TELCO	—
100	Enter **15** in Command Mode To Reinitialize Craft Interface Processes	TELCO	—
101	Wait for **REPT CFTSHL TERMINAL IN SERVICE** Message	TELCO	—
102	Depress **NORM/DISP** (**PF2**) Key and Enter **1107** in Command Mode To Obtain Display Page 1107	TELCO	—
103	Ensure 1107 Page Displays the Following: **LNOO** a: **HDWR STATE = ACT** **APPL STATE = ACT** **MODE = 1WAY IN** or **1WAY OUT** **STREAM = SCANIN** or **SCANOUT** **LNOO** b: **HDWR STATE = ACT** **APPL STATE = STBY** **LN32** a: **HDWR STATE = ACT** **APPL STATE = ACT** **MODE = 1WAY OUT** or **1WAY IN** **STREAM = SCANOUT** or **SCANIN** a = Previously Equipped DLN Member Number b = Growth DLN Member Number	TELCO/INST	—
104	Enter Message **OP:DLNCM,DLNMAP!** and Ensure DLN States in Printout Are Same As Indicated on 1107 Page (Item 103)	TELCO/INST	—
105	Enter Message **AUD:DLN 1,INS "LNOO-a"!** (a = Growth DLN Member Number) To Run DLN 1 Audit on Growth DLN and Ensure 0 Errors Were Found	TELCO/INST	—
106	Enter Message **AUD:DLN 2,INS "LNOO-a"!** (a = Growth DLN Member Number) To Run DLN 2 Audit on Growth DLN and Ensure 0 Errors Were Found	TELCO/INST	—
107	Enter Message **AUD:DLN 3,INS "LNOO-a"!** (a = Growth DLN Member Number) To Run DLN 3 Audit on Growth DLN and Ensure 0 Errors Were Found	TELCO/INST	—

DO THE ITEMS BELOW IN THE ORDER LISTED . . . . . FOR DETAILS, GO TO			
108	Enter Message **SW:DLN,LNOO** a,**LNOO** b! To Make Growth DLN Active a = Active DLN in RN Cabinet 00 b = Growth DLN	TELCO/INST	—
109	Enter Following Messages To Allow Automatic Diagnostics: • **ALW:DMQ;SRC REX!** • **ALW:DMQ;SRC ADP!**	TELCO	—
110	At MCC **SYSTEM ALARMS** Panel, Depress **SERVICE DEGRADING FAILURE** Key To Obtain Service Degrading Report Printout. If There Are Any Units Listed, Make Corrective Action To Clear Service Degrading Condition of Each Unit Listed Before Continuing	TELCO	—
111	At MCRT, Enter Message **OP:RING;DETD!** and Ensure No **"i"** Is Listed for Any Link Node (i = Isolated)	TELCO	—
112	Verify API-DLN Stream Status (**OP:DLNCM;STREAM!**)	TELCO	DLP-513
113	Copy Incore Equipment Configuration Data Base (ECD) to Disk	TELCO	DLP-519
114	Soak Growth Ring Hardware for 12 Hours To Ensure No Problems Exist With System Operation After Growth	TELCO/INST	—
115	Verify System Status	TELCO	DLP-542
116	At MCRT, Enter Following Messages To Inhibit Automatic Diagnostics: • **INH:DMQ;SRC REX!** • **INH:DMQ;SRC ADP!**	TELCO	—
	NOTE: Items 117 through 119 are being performed to ensure clean file system		
117	Copy Incore Equipment Configuration Data Base (ECD) to Disk	TELCO	DLP-519
118	Run File System Audits To Ensure No File System Errors	TELCO	DLP-520
119	Update Backup Data Base	TELCO	DLP-521
	NOTE: DLN and IUN, if required, will be grown in RN cabinet 32 next		
120	Verify Current 3B Computer DMA Channel 12 Configuration	TELCO	DLP-537
121	At MCRT, Enter Message **INH:AUD:ALL!** To Inhibit All 3B Computer Audits	TELCO	—

DO THE ITEMS BELOW IN THE ORDER LISTED . . . . . FOR DETAILS, GO TO			
122	Initiate Processes To Define New audinst, mdct, and Base ucb Records for Growth DLN in RN Cabinet 32	TELCO	DLP-538
123	At MCRT, Enter Message **ALW:AUD:ALL!** To Allow Audits	TELCO	—
124	Depress **EA DISP** (**PF1**) Key	TELCO	—
125	If CU 0 or CU 1 Is Forced On Line (**FONL**), Enter 13 (**CLR-FONL**) in Command Mode To Clear Force	TELCO	—
126	At Power Switch, Remove From Service and Power Down CU 0	TELCO	DLP-500
127	Connect Dual Serial Channel Cable Between Growth DLN and CU 0	INST	—
128	Recent Change Dual Serial Channel 12 From **0x7f** to **0xff** To Equip Port 7 for CU 0	TELCO	DLP-508
129	Power Up and Restore to Service CU 0	TELCO/INST	DLP-501
130	Soak CU 0 as Standby CU for 15 Minutes	TELCO/INST	—
131	At MCRT, Enter Message **SW:CU!** To Make CU 0 Active	TELCO	—
132	Soak CU 0 as Active CU for at Least 1 Hour	TELCO/INST	—
133	Safe Point To Temporarily Stop This Procedure. If Stopping, at MCRT, Enter Following Messages To Restore System Operation: • **ALW:DMQ;SRC REX!** • **ALW:DMQ;SRC ADP!**	TELCO/INST	—
134	If Procedure Was Stopped (Item 133), Perform Items 135 Through 139; Otherwise Go to Item 140	TELCO	—
135	Verify System Status	TELCO	DLP-542
136	At MCRT, Enter Following Messages To Return System to Pre-Stoppage State: • **INH:DMQ;SRC REX!** • **INH:DMQ;SRC ADP!**	TELCO	—
	NOTE: Items 137 through 139 are being performed to ensure clean file system		
137	Copy Incore Equipment Configuration Data Base (ECD) to Disk	TELCO	DLP-519
138	Run File System Audits To Ensure No File System Errors	TELCO	DLP-520
139	Update Backup Data Base	TELCO	DLP-521

DO THE ITEMS BELOW IN THE ORDER LISTED . . . . . FOR DETAILS, GO TO			
140	At MCRT, Depress **EA DISP** (**PF1**) Key	TELCO	—
141	If CU 0 or CU 1 Is Forced On Line (**FONL**), Enter 13 (**CLR-FONL**) in Command Mode To Clear Force	TELCO	—
142	At Power Switch, Remove From Service and Power Down CU 1	TELCO	DLP-500
143	Connect Dual Serial Channel Cable Between Growth DLN and CU 1	INST	—
144	Recent Change Dual Serial Channel 12 From **0x7f** to **0xff** To Equip Port 7 for CU 1	TELCO	DLP-508
145	Power Up and Restore to Service CU 1	TELCO/INST	DLP-501
146	Soak CU 1 as Standby CU for 15 Minutes	TELCO/INST	—
147	At MCRT, Enter Message **SW:CU!** To Make CU 1 Active	TELCO	—
148	Soak CU 1 as Active CU for at Least 1 Hour	TELCO/INST	—
149	Safe Point To Temporarily Stop This Procedure. If Stopping, at MCRT, Enter Following Messages To Restore System Operation: • **ALW:DMQ;SRC REX!** • **ALW:DMQ;SRC ADP!**	TELCO/INST	—
150	If Procedure Was Stopped(Item 149), Perform Items 151 Through 155; Otherwise, Go to Item 156	TELCO	—
151	Verify System Status	TELCO	DLP-542
152	At MCRT, Enter Following Messages To Return System to Pre-Stoppage State: • **INH:DMQ;SRC REX!** • **INH:DMQ;SRC ADP!**	TELCO	—
	NOTE: Items 153 through 155 are being performed to ensure clean file system		
153	Copy Incore Equipment Configuration Data Base (ECD) to Disk	TELCO	DLP-519
154	Run File System Audits To Ensure No File System Errors	TELCO	DLP-520
155	Update Backup Data Base	TELCO	DLP-521
156	At MCRT, Enter Message **OP:RING:DETD!** and Ensure No **"i"** Is Listed for Any Link Node (i = Isolated). Only One Area on CNI Ring Can Be Isolated at a Time. If Any Link Node Is Isolated, That Link Node Will Have To Be Restored Before Continuing	TELCO	—

DO THE ITEMS BELOW IN THE ORDER LISTED			FOR DETAILS, GO TO
157	If Growth Shelf Unit Will Be Highest Equipped Shelf Unit in RN Cabinet, Go to Item 164	TELCO	—
158	If Shelf Unit Is Being Grown Between Two Equipped Link Nodes That Contain IFBs, Perform Items 159 Through 168; Otherwise, Go to Item 169	TELCO	—
159	Determine Next Higher Equipped Link Node Number to Growth Shelf Unit	TELCO	—
160	If Link Node Determined in Item 159 Meets the Criteria in Item 8.B.2, Perform Items 161 and 162; Otherwise, Go to Item 163	TELCO	—
161	Notify Users on Link Node Determined in Item 159 That Their Signaling Link Will Be Temporarily Down	TELCO	—
162	Change Active Signaling Link(s) in Link Node Determined in Item 159 to MOOS (Record Signaling Link(s) That Was Changed for Later Use)	TELCO	DLP-526
163	At MCRT, Enter Message **RMV:LN32** a! for Link Node Determined in Item 159. Ensure **RING RMV LN32** a **COMPLETED** Message Is Received	TELCO	—
164	Determine Next Lower Equipped Link Node Number to Growth Shelf Unit	TELCO	—
165	If Link Node Determined in Item 164 Meets the Criteria in Item 8.A or 8.B.1, Perform Items 166 and 167; Otherwise, Go to Item 168	TELCO	—
166	Notify Users on Link Node Determined in Item 164 That Their Signaling Link Will Be Temporarily Down	TELCO	—
167	Change Active Signaling Link(s) in Link Node Determined in Item 164 to MOOS (Record Signaling Link(s) That Was Changed for Later Use)	TELCO	DLP-526
168	At MCRT, Enter Message **RMV:LN32** a! for Link Node Determined in Item 164. Ensure **RING RMV LN32** a **COMPLETED** Message Is Received	TELCO	—
169	Enter Message **CFR:RING,LN32** a**;EXCLUDE!** (a = Member Number of One Link Node Removed in Item 163 or 168) To Isolate Growth Area From Active Ring	TELCO	DLP-539
170	Recent Change hv Value for Removed Link Node(s) per A or B Below:		
	NOTE: If existing DLN is to be recent changed, RPCD must also be recent changed. The DLPs must be followed to determine proper sequence		
	A. If Only One Link Node Was Removed (Items 163 or 168):		
	1. Recent Change Removed Link Node to UNEQIP (Do Not Exit Recent Change)	TELCO	DLP-540
	(Item 170 Is Continued on Next Page)		

DO THE ITEMS BELOW IN THE ORDER LISTED . . . . . FOR DETAILS, GO TO			
170 (Contd)	2. Recent Change hv Value to a Value Associated With No IFB and Ring Interface (RI) Type Equipped in Removed Link Node and Change Major Status to GROW (Exit Recent Change)	TELCO	DLP-527
	B. If Two Link Nodes Were Removed (Items 163 and 168):		
	1. Recent Change Both Removed Link Nodes to UNEQIP (Do Not Exit Recent Change)	TELCO	DLP-540
	2. Recent Change hv Value to a Value Associated With No IFB and RI Type Equipped in Both Removed Link Nodes and Change Major Status to GROW (Exit Recent Change)	TELCO	DLP-527
171	At MCRT, Enter **1106** in Command Mode To Obtain Display Page 1106	TELCO	—
172	Enter **632** in Command Mode	TELCO	—
173	Ensure 1106 Page Displays Removed Link Node(s) in GROW State	TELCO	—
174	Remove IFB Circuit Board, as Required, From Removed Link Node(s) and Install an IFB in Growth IUN, if Required	INST	—
	NOTE: Growth DLN requires both RPCD and LN ucb entries and must be updated in that order		
175	Recent Change Growth DLN and IUN, if Being Grown, From UNEQIP to GROW and hv, mv, and Packcode Values, as Required (Exit Recent Change)	TELCO	DLP-541
176	At MCRT, Enter **1106** in Command Mode To Obtain Display Page 1106	TELCO	—
177	Enter **632** in Command Mode	TELCO	—
178	Ensure 1106 Page Displays Growth DLN and IUN, if Grown, in GROW State	TELCO	—
179	Connect Unbalanced (Intraframe) Cables and Balanced (Interframe) Cables, if Required, for Growth DLN and IUN	INST	—
180	Recent Change Removed Link Node(s) to OOS and Restore per A or B Below:		
	A. If Only One Link Node Was Removed (Item 163 or 168):		
	1. Recent Change Removed Link Node to OOS (Exit Recent Change)	TELCO	DLP-528
	2. At MCRT, Enter Message **RST:LN32** a! To Restore Removed Link Node. Ensure **RING RST LN32** a **COMPLETED** Message Is Received	TELCO/INST	—
	(Continued on Page 14)		

DO THE ITEMS BELOW IN THE ORDER LISTED . . . . . FOR DETAILS, GO TO			
180 (Contd)	B. If Two Link Nodes Were Removed (Items 163 and 168):		
	1. Recent Change Both Removed Link Nodes to OOS (Exit Recent Change)	TELCO	DLP-528
	2. At MCRT, Enter Message **RST:LN32** a! for Each Removed Link Node. Ensure **RING RST LN32** a **COMPLETED** Message Is Received	TELCO/INST	—
181	If Link Node(s) That Was Restored (Item 180) Is CCS7, or DCHAN, Perform Items 182 and 183; Otherwise, Go to Item 184	TELCO	—
182	Change All Signaling Links (Recorded in Items 162 and/or 167) to IS	TELCO	DLP-529
183	Notify User(s) on Link Node(s) That Was Restored (Item 180) To Resume Their Activities	TELCO	—
184	At MCRT, Enter Message **DGN:LN32** a;**RAW**! (a = Growth DLN Member Number); No Diagnostic Failures Allowed on Phases Run. Wait for **DGN LN32** a **CATP (X'00000000 X'40000000) MSG COMPLETE** Message	TELCO/INST	—
185	If IUN Is Being Grown With Growth DLN, Enter Message **DGN:LN32** a;**RAW**! (a = Growth IUN Member Number); No Diagnostic Failures Allowed on Phases Run. Wait for **DGN LN32** a **CATP (X'00000000 X'40000000) MSG COMPLETE** Message	TELCO/INST	—
186	Enter Message **SW:CU**! To Switch CUs	TELCO	—
187	Enter Message **DGN:LN32** a;**RAW**! (a = Growth DLN Member Number); No Diagnostic Failures Allowed on Phases Run. Wait for **DGN LN32** a **CATP (X'00000000 X'40000000) MSG COMPLETE** Message	TELCO/INST	—
188	Recent Change Growth DLN and IUN, if Being Grown, to OOS (Exit Recent Change)	TELCO	DLP-528
189	At MCRT, Enter **1106** in Command Mode To Obtain Display Page 1106	TELCO	—
190	Enter **632** in Command Mode To Obtain 32 Group Display	TELCO	—
191	Ensure 1106 Page Displays Growth DLN and Growth IUN, if Being Grown, in OOS State	TELCO	—
192	Restore Growth DLN Unconditionally (**RST:LN32** a;**UCL**!)	TELCO/INST	DLP-557
193	If IUN Is Being Grown With Growth DLN, Restore Growth IUN Unconditionally (**RST:LN32** a;**UCL**!). Ensure **RST LN32** a **COMPLETED** Message Received	TELCO/INST	DLP-531
194	Verify API-DLN Stream Status (**OP:DLNCM;STREAM**!)	TELCO/INST	DLP-513
	(Continued on Page 15)		

DO THE ITEMS BELOW IN THE ORDER LISTED . . . . . FOR DETAILS, GO TO			
195	At MCRT, Depress **EA DISP** (**PF1**) Key	TELCO	—
196	Enter **15** in Command Mode To Reinitialize Craft Interface Processes	TELCO	—
197	Wait for **REPT CFTSHL TERMINAL IN SERVICE** Message	TELCO	—
198	Depress **NORM**/**DISP** (**PF2**) Key and Enter **1107** in Command Mode To Obtain Display Page **1107**	TELCO	—
199	Ensure 1107 Page Displays the Following: **LNOO** a: **HDWR STATE = ACT** **APPL STATE = ACT** **MODE = 1WAY IN** or **1WAY OUT** **STREAM = SCANIN** or **SCANOUT** **LNOO** b: **HDWR STATE = ACT** **APPL STATE = STBY** **LN32** b: **HDWR STATE = ACT** **APPL STATE = ACT** **MODE = 1WAY OUT** or **1WAY IN** **STREAM = SCANOUT** or **SCANIN** **LN32** a: **HDWR STATE = ACT** **APPL STATE = STBY** a = Previously Equipped DLN Member Number b = Growth DLN Member Number	TELCO/INST	—
200	Enter Message **OP:DLNCM,DLNMAP!** and Ensure DLN States in Printout Are Same as Indicated on 1107 Page (Item 199)	TELCO/INST	—
201	Enter Message **AUD:DLN 1,INS "LN32-a"!** (a = Growth DLN Member Number) To Run DLN 1 Audit on Growth DLN and Ensure 0 Errors Were Found	TELCO/INST	—
202	Enter Message **AUD:DLN 2,INS "LN32-a"!** (a = Growth DLN Member Number) To Run DLN 2 Audit on Growth DLN and Ensure 0 Errors Were Found	TELCO/INST	—
203	Enter Message **AUD:DLN 3,INS "LN32-a"!** (a = Growth DLN Member Number) To Run DLN 3 Audit on Growth DLN and Ensure 0 Errors Were Found	TELCO/INST	—
204	Enter Message **SW:DLN,LN32** a,**LN32** b! To Make Growth DLN Active a = Active DLN in RN Cabinet 32 b = Growth DLN	TELCO/INST	—

DO THE ITEMS BELOW IN THE ORDER LISTED . . . . . FOR DETAILS, GO TO			
205	Enter Following Messages To Allow Automatic Diagnostics: • ALW:DMQ;SRC REX! • ALW:DMQ;SRC ADP!	TELCO	—
206	At MCC **SYSTEM ALARMS** Panel, Depress **SERVICE DEGRADING FAILURE** Key To Obtain Service Degrading Report Printout. If There Are Any Units Listed, Make Corrective Action To Clear Service Degrading Condition of Each Unit Listed Before Continuing	TELCO	—
207	At MCRT, Enter Message OP:RING;DETD! and Ensure No **"i"** Is Listed for Any Link Node (i = Isolated)	TELCO	—
208	Verify API-DLN Stream Status (OP:DLNCM;STREAM!)	TELCO	DLP-513
209	Copy Incore Equipment Configuration Data Base (ECD) to Disk	TELCO	DLP-519
210	Soak Growth Ring Hardware for 12 Hours To Ensure No Problems Exist With System Operation After Growth	TELCO/INST	—
211	Verify System Status	TELCO	DLP-542
212	Copy Incore ECD to Disk	TELCO	DLP-519
213	Run File System Audits To Ensure No File System Errors	TELCO	DLP-520
214	Update Backup Data Base	TELCO	DLP-521
215	Write 3B Computer Backup Tapes	TELCO	DLP-522
216	Verify Backup Tapes	TELCO	DLP-525

DO THE ITEMS BELOW IN THE ORDER LISTED . . . . . FOR DETAILS, GO TO

		RESPONSIBILITY	
	WARNING: An antistatic wrist strap must be worn to prevent electrostatic discharge and possible damage to circuit packs while handling		
	NOTES: 1. This procedure has been modified to include an initial configuration of four DLNEs per office. This procedure can not be tested until the next new office goes to the field 2. Associated input/output processor (IOP) and subdevices will be temporarily removed and powered down during growth. Notify other users of the IOP that this temporary stoppage will take place 3. This procedure is for **new start offices only** 4. This procedure contains a soak interval for verifying system operation and stability during growth. During the soak interval, all abnormal conditions (such as interrupts, interjects, and diagnostic failures related to growth) must be investigated and resolved immediately. Growth equipment, being soaked, must be error free for at least 12 hours 5. Throughout this procedure, the following term, **LNxx yy**, is used where: **xx = Group Number** **yy = Member Number**		
1	Ensure That All Hardware To Be Installed Is Available	INST	—
2	Verify System Status (New Start)	TELCO	DLP-551
3	Perform Preliminary Installation Activities	INST	—
4	Safe Point To Temporarily Stop This Procedure	TELCO	—
5	If Procedure Was Stopped in Item 6, Verify System Status (New Start)	TELCO	DLP-551
6	At MCRT, Enter Following Messages To Inhibit Automatic Diagnostics: • INH:DMQ;SRC REX! • INH:DMQ;SRC ADP!	TELCO	—
7	Perform the Following To Ensure Clean File System Before Starting Growth:		
	1. Copy Incore Equipment Configuration Data Base (ECD) to Disk	TELCO	DLP-519
	2. Run File System Audits To Ensure No File System Errors	TELCO	DLP-520
	3. Update Backup Data Base	TELCO	DLP-521

DO THE ITEMS BELOW IN THE ORDER LISTED . . . . . FOR DETAILS, GO TO			
8	Perform the Following Steps for RNC 00 and Then Repeat for RNC 32		
	1. Notify Users On Growth-Associated IOP That IOP Will Be Temporarily Powered Down [IOP 0 for Ring Node Cabinet (RNC) 00 or IOP 1 for RNC 32]	TELCO	—
	2. Remove From Service and Power Down IOP Associated With Growth RNC (Item 8.1)	TELCO	DLP-500
	3. At Powered Down IOP, Connect Scan Point Cables From Growth RNC and DFR Frame	INST	—
	4. Connect RNC Alarm Cable to Office Alarm Grid	INST	—
	5. Power Up And Restore to Service IOP Associate With Growth RNC	TELCO	DLP-501
	6. Notify Users on Growth-Associated IOP That It Has Been Restored	TELCO	—
9	Verify CNI Ring Power Alarms	INST	—
10	Perform Power Verification Tests on Both RNCs	INST	—
11	At MCRT, Depress **EA DISP** (**PF1**) Key	TELCO	—
12	Enter 36 in Command Mode To Set Software Check Inhibits	TELCO	—
13	Enter 51 in Command Mode To Initialize the 3B20D Computer	TELCO	—
14	Wait for System To Restore	TELCO	—
15	Set Interprocessor Message Switch (IMS) Flag to Manual Ring Mode	TELCO	DLP-502
16	Create CNI Office Data Files	TELCO	DLP-503
17	Enable CNI Feature Bit	TELCO	DLP-504
18	Start Ring Processes:		
	1. At MCRT, Depress **EA DISP** (**PF1**) Key	TELCO	—
	2. Enter 42 in Command Mode	TELCO	—
	3. Enter G in Command Mode	TELCO	—
	4. Enter 50 in Command Mode To Start Ring Processes; Wait for Successful PRM To Print	TELCO	—
	NOTE: Some unsuccessful ring-initialization attempt failure printouts will be received. If printouts indicate any hardware failures, these must be corrected before continuing		
	5. Verify That Ring Processes Have Started	TELCO	DLP-505

DO THE ITEMS BELOW IN THE ORDER LISTED . . . . . FOR DETAILS, GO TO			
19	At MCRT, Enter **15** in Command Mode on EAI Page To Reinitialize Craft Interface Processes. Wait for **REPT CFTSHL TERMINAL IN SERVICE** Message and 102 Page To Display	TELCO	—
20	At MCRT, Observe First Line on Display to Right of Office Name. Ensure an "R" Is Included in the List of Feature Flag Indicators and It Is the Fifth Character Position	TELCO	—
21	Perform Level 4 Ring Init (**INIT:RING 4!**)	TELCO	DLP-506
22	At MCRT, Verify Display of Ring Status Pages (1105, 1106, 1107, and 1108)	TELCO	DLP-507
23	Enter **1105** in Command Mode To Obtain Display Page 1105	TELCO	—
24	Ensure All Nodes Are Shown as Unequipped (UNEQ = Unequipped)	TELCO	—
25	Recent Change Each RPCN and DLN From UNEQIP to GROW and Update the Node-Specific Variables as Required (Do Not Recent Change Any Other Nodes)	TELCO	DLP-538
26	At Power Switch, Remove From Service and Power Down CU 0	TELCO	DLP-500
27	At RNCs 00 & 32, Remove Power From Interface Units	INST	—
28	Connect RPCN00 0 & RPCN32 0 Interface Cables to Dual Serial Channels (DSCH) in CU 0	INST	—
29	Connect All DLN Interface Cables to DSCH In CU 0	INST	—
30	Recent Change DSCH 12 to 0xff To Equip RPCN And DLN Ports	TELCO	DLP-508
31	Restore Power To Interface Units (Item 27)	INST	—
32	At Power Switch, Power Up And Restore To Service CU 0	TELCO/INST	DLP-501
33	Soak CU 0 as STBY CU for 15 Minutes	TELCO/INST	—
34	AT MCRT, Enter Message **SW:CU!** To Make CU 0 Active	TELCO	—
35	Soak CU 0 as ACT CU for at Least One Hour	TELCO/INST	—
36	Safe Point To Temporarily Stop This Procedure. If Stopping, at MCRT, Enter the Following Messages To Allow Automatic Diagnostics: • **ALW:DMQ;SRC REX!** • **ALW:DMQ;SRC ADP!**	TELCO/INST	—
	(Continued on Page 4)		

DO THE ITEMS BELOW IN THE ORDER LISTED . . . . . FOR DETAILS, GO TO			
37	If Procedure Was Stopped (Item 36), Perform the Following Steps:		
	1. At MCRT, Enter the Following Messages To Inhibit Automatic Diagnostics: • INH:DMQ;SRC REX! • INH:DMQ;SRC ADP!	TELCO/INST	—
	2. Copy Incore Equipment Configuration Data Base (ECD) to Disk	TELCO	DLP-519
	3. Run File System Audits To Ensure No File System Errors	TELCO	DLP-520
	4. Update Backup Data Base	TELCO	DLP-521
38	At Power Switch, Remove From Service and Power Down CU 1	TELCO	DLP-500
39	At RNCs 00 And 32, Remove Power From Interface Units	INST	—
40	Connect RPCN00 0 And RPCN32 0 Interface Cables to DSCH In CU 1	INST	—
41	Connect All DLN Interface Cables to DSCH In CU 1	INST	—
42	Recent Change DSCH 12 to 0xff To Equip RPCN and DLN Ports	TELCO	DLP-508
43	Restore Power To Interface Units (Item 39)	INST	—
44	At Power Switch, Power Up and Restore to Service CU 1	TELCO/INST	DLP-501
45	Soak CU 1 as STBY CU for 15 Minutes	TELCO/INST	—
46	AT MCRT, Enter Message **SW:CU!** To Make CU 1 Active	TELCO	—
47	Soak CU 1 as ACT CU for at Least One Hour	TELCO/INST	—
48	Safe Point To Temporarily Stop This Procedure. If Stopping, at MCRT, Enter the Following Messages To Allow Automatic Diagnostics: • ALW:DMQ;SRC REX! • ALW:DMQ;SRC ADP!	TELCO/INST	—
49	If Procedure Was Stopped (Item 48), Perform the Following Steps:		
	1. At MCRT, Enter the Following Messages To Inhibit Automatic Diagnostics: • INH:DMQ;SRC REX! • INH:DMQ;SRC ADP!	TELCO/INST	—
	2. Copy Incore Equipment Configuration Data Base (ECD) to Disk	TELCO	DLP-519

DO THE ITEMS BELOW IN THE ORDER LISTED . . . . . FOR DETAILS, GO TO			
49 (Contd)	3. Run File System Audits To Ensure No File System Errors	TELCO	DLP-520
	4. Update Backup Data Base	TELCO	DLP-521
50	Recent Change Each Growth Link Node From UNEQIP to GROW and Update the Node-Specific Variable as Required (Exit Recent Change)	TELCO	DLP-538
51	Enter Message **DGN:RPCN00 0!** To Diagnose RPCN00 0. No Diagnostic Failures Are Allowed. Wait for **DGN RPCN00 0 CATP (X'00000000 X'80000000) MSG COMPLETE** Message	TELCO/INST	—
52	Enter Message **DGN:RPCN32 0!** To Diagnose RPCN32 0. No Diagnostic Failures Are Allowed. Wait for **DGN RPCN32 0 CATP (X'00000000 X'80000000) MSG COMPLETE** Message	TELCO/INST	—
53	Enter Message **SW:CU!** To Switch CUs	TELCO	—
54	Enter Message **DGN:RPCN00 0!** To Diagnose RPCN00 0. No Diagnostic Failures Are Allowed. Wait for **DGN RPCN00 0 CATP (X'00000000 X'80000000) MSG COMPLETE** Message	TELCO/INST	—
55	Enter Message **DGN:RPCN32 0!** To Diagnose RPCN32 0. No Diagnostic Failures Are Allowed. Wait for **DGN RPCN32 0 CATP (X'00000000 X'80000000) MSG COMPLETE** Message	TELCO/INST	—
56	Recent Change RPCNs From GROW to OOS	TELCO	DLP-509
57	Unconditionally Restore Each RPCN to STBY State	TELCO/INST	DLP-510
58	Recent Change Each Growth Link Node From GROW to OOS (Include DLNs)	TELCO	DLP-509
59	Enter Message **CFR:RING!** To Place Ring Configuration in Normal State	TELCO	DLP-511
60	Safe Point To Temporarily Stop This Procedure. If Stopping, At MCRT, Enter the Following Messages To Allow Automatic Diagnostics: • ALW:DMQ;SRC REX! • ALW:DMQ;SRC ADP!	TELCO/INST	—
61	If Procedure Was Stopped (Item 60), Perform the Following Steps:		
	1. At MCRT, Enter the Following Messages To Inhibit Automatic Diagnostics: • INH:DMQ;SRC REX! • INH:DMQ;SRC ADP!	TELCO/INST	—
	2. Copy Incore Equipment Configuration Data Base (ECD) to Disk	TELCO	DLP-519
	(Continued on Page 6)		

DO THE ITEMS BELOW IN THE ORDER LISTED . . . . . FOR DETAILS, GO TO			
61 (Contd)	3. Run File System Audits To Ensure No File System Errors	TELCO	DLP-520
	4. Update Backup Data Base	TELCO	DLP-521
62	Enter Message **DGN:LNxx yy!** To Diagnose Each Growth Link Node in Both Cabinets. Diagnostic Failures Are Allowed. Wait for **DGN LNxx yy CATP (X'00000000 X'40000000) MSG COMPLETE** Message	TELCO/INST	—
63	Enter Message **SW:CU!** To Switch CUs	TELCO	—
64	Enter Message **DGN:LNxx yy!** To Diagnose Each DLN in Both Cabinets. Diagnostic Failures Are Allowed. Wait for **DGN LNxx yy CATP (X'00000000 X'40000000) MSG COMPLETE** Message	TELCO/INST	—
65	Enter Message **RST:LNxx yy;UCL!** To Unconditionally Restore Each Growth Link Node (Includes DLNs)	TELCO/INST	DLP-512
66	Verify API-DLN Stream Status (**OP:DLNCM;STREAM!**)	TELCO/INST	DLP-513
67	Add Office-Identification Data To Data Base	TELCO	DLP-516
68	Change AUDREC Form To Allow CNI/IMS Audit Scheduling	TELCO	DLP-518
69	Copy Incore ECD to Disk	TELCO	DLP-519
70	At MCRT, Enter the Following Messages To Allow Automatic Diagnostics: • **ALW:DMQ;SRC REX!** • **ALW:DMQ;SRC ADP!**	TELCO	—
71	Soak Growth Ring Hardware for a Minimum of 12 Hours To Ensure That No Problems Exist With System Operation	TELCO	—
72	At MCRT, Enter the Following Messages To Inhibit Automatic Diagnostics: • **INH:DMQ;SRC REX!** • **INH:DMQ;SRC ADP!**	TELCO	—
73	Clear IMS Manual Ring Flag	TELCO	DLP-502
74	Perform Level 4 Ring Init (**INIT:RING 4!**)	TELCO	DLP-506
75	At MCRT, Depress **EA DISP** (**PF1**) Key	TELCO	—
76	Enter **37** in Command Mode To Set Software Check Inhibits	TELCO	—
77	Enter **51** in Command Mode To Initialize the 3B20D Computer	TELCO	—

DO THE ITEMS BELOW IN THE ORDER LISTED . . . . . FOR DETAILS, GO TO			
78	Wait for System To Restore	TELCO	—
79	At MCRT, Verify Display of Ring Status Pages (1105, 1106, 1107, and 1108)	TELCO	DLP-507
80	Verify API-DLN Stream Status (**OP:DLNCM;STREAM!**)	TELCO/INST	DLP-513
81	Run File System Audits To Ensure No File System Errors	TELCO	DLP-520
82	Update Backup Data Base	TELCO	DLP-521
83	At MCRT, Enter Following Messages To Allow Automatic Diagnostics: • **ALW:DMQ;SRC REX!** • **ALW:DMQ;SRC ADP!**	TELCO	—
84	Turn on Service-Degrading Report for CNI Ring	TELCO	DLP-533
85	Write 3B Computer Backup Tapes	TELCO	DLP-522
86	Verify Backup Tapes	TELCO	DLP-525

DO THE ITEMS BELOW IN THE ORDER LISTED . . . . . FOR DETAILS, GO TO

		RESPONSIBILITY	
	WARNING: An antistatic wrist strap must be worn to prevent electrostatic discharge and possible damage to circuit packs while handling		
	NOTES: 1. CNI Data Base Administrator must enter office-dependent data prior to the start of this procedure 2. This procedure must be performed during light traffic periods 3. This procedure contains a soak interval for verifying system operation and stability during growth. During the soak interval, all abnormal conditions (such as interrupts, interjects, and diagnostic failures related to growth) must be investigated and resolved immediately. Growth equipment, being soaked, must be error free for at least 12 hours. **No other growth activity can take place until this soak is complete** 4. Throughout this procedure, the following term, **LNxx yy**, is used where: **xx = Group Number** **yy = Member Number** 5. Since LI is being added to an existing DCHAN node with active links, the customers on the active links must sign release papers to allow their links to be temporarily turned down 6. Only one DCHAN node can be modified during the growth session 7. This procedure can only be used in frames 00 and 32		
1	Ensure Room Is Available for Growth Link Interface (LI) Pack	INST	—
2	Ensure That Office-Dependent Node Data Is Populated	TELCO	DLP-550
3	Verify System Status	TELCO	DLP-542
4	Perform Preliminary Installation Activities	INST	—
5	Safe Point To Temporarily Stop This Procedure	INST	—
6	If Procedure Was Stopped (Item 5), Verify System Status	TELCO	DLP-542
7	At MCRT, Enter Following Messages To Inhibit Automatic Diagnostics: • INH:DMQ;SRC REX! • INH:DMQ;SRC ADP!	TELCO	—

DO THE ITEMS BELOW IN THE ORDER LISTED . . . . . FOR DETAILS, GO TO			
8	Perform the Following To Ensure Clean File System Before Starting Growth:		
	1. Copy Incore Equipment Configuration Data Base (ECD) to Disk	TELCO	DLP-519
	2. Run File System Audits To Ensure No File System Errors	TELCO	DLP-520
	3. Update Backup Data Base	TELCO	DLP-521
9	Ensure That the Appropriate Customer Release Forms Are Available for the Customers Who Have Active Links on the Growth DCHAN Node	TELCO	—
10	Change Active Signaling Link(s) on the Link Node Being Updated to MOOS [Record Signaling Link(s) Set to MOOS for Later Use]	TELCO	DLP-526
11	At MCRT, Enter Message **EXC:ENVIR;UPROC,FN"ducb",ARGS("LNxx","yy"),OPL 999!**	TELCO	—
12	Enter Message **RMV:LNxx yy!** To Remove DCHAN Node Being Updated. Ensure **RING RMV LNxx yy COMPLETED** Message Is Received	TELCO	—
13	Enter Message **CFR:RING,LNxx yy;EXCLUDE!** To Isolate the Growth Link Node(s)	TELCO	DLP-536
14	Enter **1106** in Command Mode To Obtain Display Page 1106	TELCO	—
15	Enter **400** in Command Mode To Obtain BISO-EISO Display. Ensure IUN(s) Being Converted Are Isolated	TELCO	—
16	If Ring Node Frame xx Is Not Displayed, Enter **6xx** in Command Mode	TELCO	—
17	(**NT** LED Should Be On.) Remove and Replace Circuit Packs, as Required, To Upgrade IUN Nodes to DCHAN Nodes With IRN2 (Seat New Circuit Packs)	INST	—
18	Recent Change Growth-Associated Link Node to UNEQIP (Do Not Exit Recent Change)	TELCO	DLP-540
19	Determine Node-Specific Data for Growth Node	TELCO	DLP-554
20	Recent Change the Node-Specific Variables as Recorded in Item 19 (Do Not Exit Recent Change)	TELCO	DLP-552
21	Recent Change Growth Node From UNEQIP to GROW	TELCO	DLP-553
22	At MCRT, Enter Message **DGN:LNxx yy;RAW!**; No Diagnostic Failures Allowed on Phases Run. Wait for **DGN LNxx yy ATP MESSAGE COMPLETE** or **DGN LNxx yy CATP (x'00000000 x'40000000) MSG COMPLETE** Message	TELCO/INST	—

DO THE ITEMS BELOW IN THE ORDER LISTED . . . . . FOR DETAILS, GO TO			
23	Recent Change Growth Node From GROW to OOS	TELCO	DLP-529
24	At MCRT, Enter Message TST:LNxx yy:UCL!	TELCO	DLP-509
25	Test (Prove-in) Growth-Associated Signaling Link(s)-Internal Link Check	TELCO	DLP-515
26	Change Signaling Link(s) Recorded in Item 10 to IS	TELCO	DLP-529
27	Notify Users on the Link(s) Just Restored to Service To Resume Their Activities	TELCO	—
28	At MCC SYSTEM ALARMS Panel (or 1B MCC), Depress **SERVICE DEGRADING FAILURE** (Poke Command 810) Key To Obtain Service-Degrading Report Printout. If There Are Any Units Listed, Make Corrective Action to Clear Service-Degrading Condition of Each Unit Listed Before Continuing	TELCO/INST	—
29	Copy Incore ECD to Disk	TELCO	DLP-519
30	At MCRT, Enter Following Messages To Allow Automatic Diagnostics: • ALW:DMQ;SRC REX! • ALW:DMQ;SRC ADP!	TELCO	—
31	Run File System Audits To Ensure No File System Errors	TELCO	DLP-520
32	Update Backup Data Base	TELCO	DLP-521
33	Soak Converted Node(s) for A Minimum of 12 Hours To Ensure No Problems Exist With System Operation. If Problems Are Identified, Resolve Before Continuing Any Other Activities	TELCO/INST	—
34	Following Completion of All Growth Activities for This Job:		
	1. Write 3B Computer Backup Tapes	TELCO	DLP-522
	2. Verify Backup Tapes	TELCO	DLP-525

DO THE ITEMS BELOW IN THE ORDER LISTED . . . . . FOR DETAILS, GO TO

		RESPONSIBILITY	
	WARNING: An antistatic wrist strap must be worn to prevent electrostatic discharge and possible damage to circuit packs while handling		
	NOTES: 1. CNI Data Base Administrator must enter office-dependent data prior to the start of this procedure 2. This procedure must be performed during light traffic periods 3. This procedure contains a soak interval for verifying system operation and stability during growth. During the soak interval, all abnormal conditions (such as interrupts, interjects, and diagnostic failures related to growth) must be investigated and resolved immediately. Growth equipment, being soaked, must be error free for at least 12 hours. **No other growth activity can take place until this soak is complete** 4. Throughout this procedure, the following term, **LNxx yy**, is used where: **xx = Group Number** **yy = Member Number**		
1	Ensure That Office-Dependent Node Data Is Populated	TELCO	DLP-550
2	Verify System Status	TELCO	DLP-542
3	Perform Preliminary Installation Activities	INST	—
4	Safe Point To Temporarily Stop This Procedure	INST	—
5	If Procedure Was Stopped (Item 5), Verify System Status	TELCO	DLP-542
6	At MCRT, Enter Following Messages To Inhibit Automatic Diagnostics: • INH:DMQ;SRC REX! • INH:DMQ;SRC ADP!	TELCO	—
7	Perform the Following To Ensure Clean File System Before Starting Growth:		
	1. Copy Incore Equipment Configuration Data Base (ECD) to Disk	TELCO	DLP-519
	2. Run File System Audits To Ensure No File System Errors	TELCO	DLP-520
	3. Update Backup Data Base	TELCO	DLP-521
	(Continued on Page 2)		

CONVERT IUN NODE(S) TO CCS7 — SUPPORT TO INSTALLER (INST)

DO THE ITEMS BELOW IN THE ORDER LISTED . . . . . FOR DETAILS, GO TO			
	NOTE: Only IUN(s) associated with one shelf unit and adjacent to each other can be converted prior to entering soak interval. If there are other IUN(s) to be converted, this procedure must be repeated		
8	For Each IUN Being Converted:		
	1. At MCRT, Enter Message **EXC:ENVIR;UPROC,FN"ducb",ARGS("LNxx","yy"),OPL 999!**	TELCO	—
	2. Enter Message **RMV:LNxx yy!** To Remove IUN Being Converted. Ensure **RING RMV LNxx yy COMPLETED** Message Is Received	TELCO	—
9	Enter Message **CFR:RING,LNxx yy;EXCLUDE!** (xx yy = Highest-Numbered IUN To Be Converted) To Isolate IUN(s) Being Converted. Ensure **RING CFR RING LNxx yy COMPL** Message Is Received	TELCO	—
10	Enter **1106** in Command Mode To Obtain Display Page 1106	TELCO	—
11	Enter **400** in Command Mode To Obtain BISO-EISO Display. Ensure IUN(s) Being Converted Are Isolated	TELCO	—
12	If Ring Node Frame xx Is Not Displayed, Enter **6xx** in Command Mode	TELCO	—
13	For Each IUN Being Converted:		
	1. (**NT** LED Should Be On.) Add Link Interface Pack, as Required, To Convert IUN to CCS7 (Seat New Circuit Pack)	INST	—
	2. Recent Change Growth-Associated Link Node to UNEQIP (Do Not Exit Recent Change)	TELCO	DLP-540
	3. Determine Node-Specific Data for Growth Node	TELCO	DLP-554
	4. Recent Change the Node-Specific Variables as Recorded in Step 13.3 (Do Not Exit Recent Change)	TELCO	DLP-552
	5. Recent Change Growth Node From UNEQIP to GROW	TELCO	DLP-553
	6. At MCRT, Enter Message **DGN:LNxx yy;RAW!;** No Diagnostic Failures Allowed on Phases Run. Wait for **DGN LNxx yy ATP MESSAGE COMPLETE** or **DGN LNxx yy CATP (x'00000000 x'40000000) MSG COMPLETE** Message	TELCO/INST	—
	7. Recent Change Growth Node From GROW to OOS	TELCO	DLP-509
	8. At MCRT, Enter Message **RST:LNxx yy;UCL!**	TELCO	DLP-531
	(Continued on Page 3)		

DO THE ITEMS BELOW IN THE ORDER LISTED . . . . . FOR DETAILS, GO TO			
14	At MCC SYSTEM ALARMS Panel, Depress **SERVICE DEGRADING FAILURE** Key To Obtain Service-Degrading Report Printout. If There Are Any Units Listed, Make Corrective Action To Clear Service-Degrading Condition of Each Unit Listed Before Continuing	TELCO/INST	—
15	Copy Incore ECD to Disk	TELCO	DLP-519
16	At MCRT, Enter Following Messages To Allow Automatic Diagnostics: • ALW:DMQ;SRC REX! • ALW:DMQ;SRC ADP!	TELCO	—
17	Run File System Audits To Ensure No File System Errors	TELCO	DLP-520
18	Update Backup Data Base	TELCO	DLP-521
19	Soak Converted Node(s) for a Minimum of 12 Hours To Ensure No Problems Exist With System Operation. If Problems Are Identified, Resolve Before Continuing Any Other Activities	TELCO/INST	—
20	Following Completion of All Growth Activities for This Job:		
	1. Write 3B Computer Backup Tapes	TELCO	DLP-522
	2. Verify Backup Tapes	TELCO	DLP-525

DO THE ITEMS BELOW IN THE ORDER LISTED . . . . . FOR DETAILS, GO TO

		RESPONSIBILITY	
	WARNING: An antistatic wrist strap must be worn to prevent electrostatic discharge and possible damage to circuit packs while handling		
	NOTES: 1. CNI Data Base Administrator must enter office-dependent data prior to the start of this procedure 2. This procedure must be performed during light traffic periods 3. This procedure contains a soak interval for verifying system operation and stability during growth. During the soak interval, all abnormal conditions (such as interrupts, interjects, and diagnostic failures related to growth) must be investigated and resolved immediately. Growth equipment, being soaked, must be error free for at least 12 hours. **No other growth activity can take place until this soak is complete** 4. Throughout this procedure, the following term, **LNxx yy**, is used where: **xx = Group Number** **yy = Member Number**		
1	Ensure That Office-Dependent Node Data Is Populated	TELCO	DLP-550
2	Verify System Status	TELCO	DLP-542
3	If Node Growth Required for Shelf Being Installed, Perform Initial Installation Activities	INST	—
4	If This Is First DCHAN Node on Shelf, Perform Cross-Connection Between T1FA and PTAN/DIF at DSX	INST	DLP-556
5	Safe Point To Temporarily Stop This Procedure	INST	—
6	If Procedure Was Stopped (Item 5), Verify System Status	TELCO	DLP-542
7	At MCRT, Enter Following Messages To Inhibit Automatic Diagnostics: • INH:DMQ;SRC REX! • INH:DMQ;SRC ADP!	TELCO	—
8	Perform the Following To Ensure Clean File System Before Starting Growth:		
	1. Copy Incore Equipment Configuration Data Base (ECD) to Disk	TELCO	DLP-519
	2. Run File System Audits To Ensure No File System Errors	TELCO	DLP-520
	3. Update Backup Data Base	TELCO	DLP-521

DO THE ITEMS BELOW IN THE ORDER LISTED . . . . . FOR DETAILS, GO TO			
	NOTE: Only IUN(s) associated with one shelf unit and adjacent to each other can be converted prior to entering soak interval. If there are other IUN(s) to be converted, this procedure must be repeated		
9	For Each IUN Being Converted:		
	1. At MCRT, Enter Message **EXC:ENVIR;UPROC,FN"ducb",ARGS("LNxx","yy"),OPL 999!**	TELCO	—
	2. Enter Message **RMV:LNxx yy!** To Remove IUN Being Converted. Ensure **RING RMV LNxx yy COMPLETED** Message Is Received	TELCO	—
10	Enter Message **CFR:RING,LNxx yy;EXCLUDE!** (xx yy = Highest-Numbered IUN To Be Converted) To Isolate IUN(s) Being Converted. Ensure **RING CFR RING LNxx yy COMPL** Message Is Received	TELCO	—
11	Enter **1106** in Command Mode To Obtain Display Page 1106	TELCO	—
12	Enter **400** in Command Mode To Obtain BISO-EISO Display. Ensure IUN(s) Being Converted Are Isolated	TELCO	—
13	If Ring Node Frame xx Is Not Displayed, Enter **6xx** in Command Mode	TELCO	—
14	For Each IUN Being Converted:		
	1. (**NT** LED Should Be On.) Remove and Replace Circuit Packs, as Required, To Upgrade IUN Nodes to DCHAN Nodes With IRN2 (Seat New Circuit Packs)	INST	—
	2. Recent Change Growth-Associated Link Node to UNEQIP (Do Not Exit Recent Change)	TELCO	DLP-540
	3. Determine Node-Specific Data for Growth Node	TELCO	DLP-554
	4. Recent Change the Node-Specific Variables as Recorded in Item 14.3 (Do Not Exit Recent Change)	TELCO	DLP-552
	5. Recent Change Growth Node From UNEQIP to GROW	TELCO	DLP-553
	6. At MCRT, Enter Message **DGN:LNxx yy;RAW!;** No Diagnostic Failures Allowed on Phases Run. Wait for **DGN LNxx yy ATP MESSAGE COMPLETE** or **DGN LNxx yy CATP (x'00000000 x'40000000) MSG COMPLETE** Message	TELCO/INST	—
	7. Recent Change Growth Node From GROW to OOS	TELCO	DLP-509
	8. At MCRT, Enter Message **RST:LNxx yy;UCL!**	TELCO	DLP-531
	9. Test (Prove-in) Growth-Associated Signaling Link(s)-Internal Link Check	TELCO	DLP-515

DO THE ITEMS BELOW IN THE ORDER LISTED . . . . . FOR DETAILS, GO TO			
14 (Contd)	**NOTE:** Item 14.10 is service affecting if performed with active nodes on shelf unit		
	10. If This Is First DCHAN Node on Shelf, Test (Prove-in) Growth-Associated Signaling Link(s)-External Link Check	TELCO	DLP-555
15	At MCC SYSTEM ALARM Panel, Depress **SERVICE DEGRADING FAILURE** Key To Obtain Service-Degrading Report Printout. If There Are Any Units Listed, Make Corrective Action To Clear Service-Degrading Condition of Each Unit Listed Before Continuing	TELCO/INST	—
16	Copy Incore ECD to Disk	TELCO	DLP-519
17	At MCRT, Enter Following Messages To Allow Automatic Diagnostics: • ALW:DMQ;SRC REX! • ALW:DMQ;SRC ADP!	TELCO	—
18	Run File System Audits To Ensure No File System Errors	TELCO	DLP-520
19	Update Backup Data Base	TELCO	DLP-521
20	Soak Converted Node(s) for a Minimum of 12 Hours To Ensure No Problems Exist With System Operation. If Problems Are Identified, Resolve Before Continuing Any Other Activities	TELCO/INST	—
21	Following Completion of All Growth Activities for This Job:		
	1. Write 3B Computer Backup Tapes	TELCO	DLP-522
	2. Verify Backup Tapes	TELCO	DLP-525

DO THE ITEMS BELOW IN THE ORDER LISTED . . . . . FOR DETAILS, GO TO

		RESPONSIBILITY	
	WARNING: An antistatic wrist strap must be worn to prevent electrostatic discharge and possible damage to circuit packs while handling		
	NOTES: 1. CNI data base administrator must enter office-dependent data prior to the start of this procedure 2. This procedure must be performed during light traffic periods 3. This procedure contains a soak interval for verifying system operation and stability during growth. During the soak interval, all abnormal conditions (such as interrupts, interjects, and diagnostic failures related to growth) must be investigated and resolved immediately. Growth equipment, being soaked, must be error free for at least 12 hours. **No other growth activity can take place until this soak is complete** 4. Throughout this procedure, the following term, **LNxx yy**, is used where: **xx = Group Number** **yy = Member Number**		
1	Ensure That Office-Dependent Node Data Is Populated	TELCO	DLP-550
2	Verify System Status	TELCO	DLP-542
3	Perform Preliminary Installation Activities	INST	—
4	Using Office Records, Determine IUNs To Be Converted to DCHAN(s) With IRN2	TELCO	—
5	Safe Point To Temporarily Stop This Procedure	TELCO/INST	—
6	If Procedure Was Stopped (Item 5), Verify System Status	TELCO	DLP-542
7	At MCRT, Enter Following Messages To Inhibit Automatic Diagnostics: • INH:DMQ;SRC REX! • INH:DMQ;SRC ADP!	TELCO	—
8	Perform the Following To Ensure Clean File System Before Starting Growth:		
	1. Copy Incore Equipment Configuration Data Base (ECD) to Disk	TELCO	DLP-519
	2. Run File System Audits To Ensure No File System Errors	TELCO	DLP-520
	3. Update Backup Data Base	TELCO	DLP-521
	(Continued on Page 2)		

CONVERT IUN NODE(S) WITH IRN TO DCHAN WITH IRN2

DO THE ITEMS BELOW IN THE ORDER LISTED . . . . . FOR DETAILS, GO TO			
	NOTES: 5. Only IUN(s) associated with one shelf unit and adjacent to each other can be converted prior to entering soak interval. If there are other IUN(s) to be converted, this procedure must be repeated 6. IUN nodes must be removed from highest- to lowest-numbered link node being converted		
9	For Each IUN Being Converted:		
	1. At MCRT, Enter Message **EXC:ENVIR;UPROC,FN"ducb",ARGS("LNxx","yy"),OPL 999!**	TELCO	—
	2. Enter Message **RMV:LNxx yy!** To Remove One IUN Node on Shelf Unit Being Upgraded. Ensure **RING RMV LNxx yy COMPLETED** Message Is Received	TELCO	—
10	Enter Message **CFR:RING,LNxx yy;EXCLUDE!** (xx yy = Highest-Numbered IUN Node) To Isolated IUN Nodes on Shelf Unit Being Upgraded. Ensure **RING CFR RING LNOO a COMPL** Message Is Received	TELCO	—
11	Enter **1106** in Command Mode To Obtain Display Page 1106	TELCO	—
12	Enter 400 in Command Mode To Obtain BISO-EISO Display. Ensure IUN Nodes on Shelf Unit Being Upgraded Are Isolated	TELCO	—
13	If Ring Node Frame xx Is Not Displayed, Enter **6xx** in Command Mode	TELCO	—
14	For Each IUN Being Converted:		
	1. (**NT** LED Should Be On.) Remove and Replace Circuit Packs, as Required, To Upgrade IUN Nodes to DCHAN Nodes with IRN2 (Seat New Circuit Packs)	INST	—
	2. Recent Change Growth-Associated Link Node to UNEQIP (Do Not Exit Recent Change)	TELCO	DLP-540
	3. Determine Node-Specific Data for Growth Nodes	TELCO	DLP-554
	4. Recent Change the Node-Specific Variables as Recorded in Step 14.3 (Do Not Exit Recent Change)	TELCO	DLP-552
	5. Recent Change Each Growth Node From UNEQIP to GROW	TELCO	DLP-553
	6. At MCRT, Enter Message **DGN:LNxx yy;RAW!**; No Diagnostic Failures Allowed on Phases Run. Wait for **DGN LNxx yy ATP MESSAGE COMPLETE** or **DGN LNxx yy CATP (x'00000000 x'40000000) MSG COMPLETE** Message	TELCO/INST	—
	7. Recent Change Each Growth Link Node From GROW to OOS	TELCO	DLP-509

DO THE ITEMS BELOW IN THE ORDER LISTED . . . . . FOR DETAILS, GO TO			
14 (Contd)	8. At MCRT, Enter Message **RST:LNOO a;UCL!**	TELCO	DLP-531
	9. Test (Prove-in) Growth-Associated Signaling Link(s)-Internal Link Check	TELCO	DLP-515
15	At MCC SYSTEM ALARMS Panel, depress **SERVICE DEGRADING FAILURE** Key To Obtain Service-Degrading Report Printout. If There Are Any Units Listed, Make Corrective Action To Clear Service-Degrading Condition of Each Unit Listed Before Continuing	TELCO/INST	—
16	Copy Incore ECD to Disk	TELCO	DLP-519
17	At MCRT, Enter Following Messages To Allow Automatic Diagnostics: • **ALW:DMQ;SRC REX!** • **ALW:DMQ;SRC ADP!**	TELCO	—
18	Run File System Audits To Ensure No File System Errors	TELCO	DLP-520
19	Update Backup Data Base	TELCO	DLP-521
20	Soak New DCHAN Nodes for a Minimum of 12 Hours To Ensure No Problems Exist With System Operation. If Problems Are Identified, Resolve Before Continuing With Any Other Activities	TELCO/INST	—
21	Following Completion of All Growth Activities for This Job:		
	1. Write 3B Computer Backup Tapes	TELCO	DLP-522
	2. Verify Backup Tapes	TELCO	DLP-525

DO THE ITEMS BELOW IN THE ORDER LISTED . . . . . FOR DETAILS, GO TO

		RESPONSIBILITY	
	WARNING: An antistatic wrist strap must be worn to prevent electrostatic discharge and possible damage to circuit packs while handling		
	NOTES: 1. AMA data should be transferred (tape and/or teleprocessing) prior to start of each night's degrowth activity 2. Link nodes must be degrown from lowest number to highest number in shelf unit 3. If link node to be degrown contains an interframe buffer (IFB), then IFB must be transferred to next lower numbered equipped link node. If IFB is to be transferred and next lower numbered link node is DLN or DCHAN or if degrowth associated shelf unit will not be completely emptied, degrowth cannot be performed 4. This procedure must be performed during light traffic periods 5. This procedure contains soak intervals for verifying system operation and stability during degrowth. During the soak interval, all abnormal conditions (such as interrupts, interjects, and diagnostic failures related to degrowth) must be investigated and resolved immediately. Degrowth equipment, being soaked, must be error free for at least the time specified		
1	Determine Next Lower Equipped Link Node Number From Degrowth Link Node(s)	TELCO	—
	NOTE: If last link node in highest shelf unit is being degrown, next higher link node number to degrowth link node will be lowest numbered link node in electrically adjacent RN cabinet		
2	Determine Next Higher Equipped Link Node Number to Degrowth Link Node(s)	TELCO	—
3	If Degrowth Will Cause Shelf Unit To Be Completely Empty, Perform Item 4; Otherwise, Go to Item 5	TELCO	—
4	If Link Nodes Determined in Items 1 and 2 Meet Any of the Following Criteria, Record Affected Link Node Member Number(s) and Make Arrangements With User(s) for Temporary Stoppage When Their Link Node Is Removed:	TELCO	—
	A. Last Link Node in Highest Shelf Unit Is Being Degrown and Next Lower Numbered Link Node Is CCS7, or DCHAN Type	TELCO	—
	(Continued on Page 2)		

DO THE ITEMS BELOW IN THE ORDER LISTED . . . . . FOR DETAILS, GO TO			
4 (Contd)	B. Last Link Node in Shelf Unit Between Two Equipped Shelf Units Is Being Degrown:		
	1. Next Lower Numbered Link Node to Degrowth Link Node Is CCS7, or DCHAN Type	TELCO	—
	2. Next Higher Numbered Link Node to Degrowth Link Node Is CCS7, or DCHAN Type	TELCO	—
5	Verify System Status	TELCO	DLP-542
6	At MCRT, Enter Following Messages To Inhibit Automatic Diagnostics: • INH:DMQ;SRC REX! • INH:DMQ;SRC ADP!	TELCO	—
	NOTE: Items 7 through 9 are being performed to ensure clean file system before starting growth		
7	Copy Incore Equipment Configuration Data Base (ECD) to Disk	TELCO	DLP-519
8	Run File System Audits To Ensure No System Errors	TELCO	DLP-520
9	Update Backup Data Base	TELCO	DLP-521
	NOTE: Only link nodes associated with one shelf unit can be degrown at a time. If there are other link nodes to be degrown from another shelf unit, this procedure must be repeated		
10	At MCRT, Enter Message **OP:RING;DETD!** and Ensure No **"i"** Is Listed for Any Link Node (i = Isolated). Only One Area on CNI Ring Can Be Isolated at a Time. If Any Link Node Is Isolated, That Link Node Will Have To Be Restored Before Continuing	TELCO	—
11	Change All Signaling Links Associated With One Degrowth Link Node to MOOS (Do Not Record Signaling Links That Were Changed)	TELCO	DLP-526
12	At MCRT, Enter Message **RMV:LN**xx y! for Degrowth Link Node (Item 11). Ensure **RING RMV LN**xx y **COMPLETED** Message Is Received xx = Group Number of Degrowth Link Node y = Member Number of Degrowth Link Node	TELCO	—
13	If More Link Nodes Are To Be Degrown on Shelf Unit, Repeat Items 11 and 12 for Each Link Node	TELCO	—
	(Continued on Page 3)		

DO THE ITEMS BELOW IN THE ORDER LISTED			FOR DETAILS, GO TO
14	Change All Signaling Links in Each Degrowth Link Node to Unavailable Using Data Base Management System (DMS)	TELCO	DLP-562
15	Change All Signaling Links in Each Degrowth Link Node to Unequipped Using DMS	TELCO	DLP-560
	NOTE: If more than one link node is being degrown from shelf unit, it is only necessary to cause isolation on one degrowth link node to isolate entire group		
16	At MCRT, Enter Message **CFR:RING,LN**xx y**;EXCLUDE!** To Isolate Degrowth Link Node(s) xx = Group Number of Degrowth Link Node y = Member Number of Degrowth Link Node	TELCO	–
17	Ensure **RING CFR RING LN**xx y **COMPL** Message Is Received	TELCO	–
18	Recent Change Each Degrowth Link Node to UNEQIP (Exit Recent Change)	TELCO	DLP-540
19	At MCRT, Depress **NORM/DISP** (**PF2**) Key and Enter **1106** in Command Mode To Obtain Display Page 1106	TELCO	–
20	If RN Cabinet Associated With Degrowth Link Node(s) Is Not Displayed on 1106 Page, Enter **6**xx (xx = Group Number) in Command To Obtain Proper Display	TELCO	–
21	Ensure 1106 Page Displays Each Degrowth Link Node in UNEQIP State	TELCO	–
22	If Degrowth Will Not Cause Shelf Unit To Be Completely Empty, Go to Item 65	TELCO	–
23	If Degrowth Will Cause Highest Shelf Unit in Cabinet To Be Completely Empty, Go to Item 28	TELCO	–
24	If Link Node Determined in Item 2 Meets the Criteria in Item 4.B.2, Perform Items 25 and 26; Otherwise, Go to Item 27	TELCO	–
25	Notify User(s) on Link Node Determined In Item 2 That Their Signaling Link Will Be Temporarily Down	TELCO	–
26	Change Active Signaling Link(s) in Link Node Determined in Item 2 to MOOS (Record Signaling Link(s) That Was Changed for Later Use)	TELCO	DLP-526
27	At MCRT, Enter Message **RMV:LN**xx y**!** for Link Node (Item 2). Ensure **RING RMV LN**xx y **COMPLETED** Message Is Received xx = Group Number of Link Node Determined in Item 2 y = Member Number of Link Node Determined in Item 2	TELCO	–
	(Continued on Page 4)		

DO THE ITEMS BELOW IN THE ORDER LISTED . . . . . FOR DETAILS, GO TO			
28	If Link Node Determined in Item 1 Meets the Criteria in Item 4.A or 4.B.1, Perform Items 29 and 30; Otherwise, Go to Item 31	TELCO	—
29	Notify User(s) on Link Node Determined In Item 1 That Their Signaling Links Will Be Temporarily Down	TELCO	—
30	Change Active Signaling Link(s) in Link Node Determined in Item 1 to MOOS [Record Signaling Link(s) That Was Changed for Later Use]	TELCO	DLP-526
31	At MCRT, Enter Message **RMV:LN**xx y! for Link Node (Item 1). Ensure **RING RMV LN**xx y **COMPLETED** Message Is Received xx = Group Number of Link Node Determined in Item 1 y = Member Number of Link Node Determined in Item 1	TELCO	—
32	If Degrowth Will Cause Highest Equipped Shelf Unit in Cabinet To Be Completely Empty, Go to Item 50	TELCO/INST	—
33	Install IFB Packs Into Link Nodes Determined in Items 1 and 2	INST	—
34	Disconnect Cables Between Degrowth Link Node(s) and Link Nodes Determined in Items 1 and 2	INST	—
35	Install Balanced Cables Between Link Nodes Determined in Items 1 and 2 per J3F011E (for RN Cabinet 00 or 32) or J3F011G (for HDB Cabinet)	INST	—
	NOTE: If DLN is to be recent changed (Items 36 and 37), RPCD must also be recent changed. The DLPs must be followed to determine proper sequence		
36	Recent Change Link Nodes Determined in Items 1 and 2 to UNEQIP (Do Not Exit Recent Change)	TELCO	DLP-540
37	Recent Change hv Value to a Value Associated With IFBs Installed (Item 33) and Ring Interface (RI) Type in Link Nodes Determined in Items 1 and 2 and Change Major Status to GROW (Exit Recent Change)	TELCO	DLP-527
38	At MCRT, Enter Message **DGN:LN**xx y**;RAW**! To Diagnose Link Node Determined in Item 1; No Diagnostic Failures Allowed on Phases Run. Wait for **DGN LN**xx y **CATP (X'00000000 X'40000000) MSG COMPLETE** Message xx = Group Number of Link Node Determined in Item 1 y = Member Number of Link Node Determined in Item 1	TELCO/INST	—
	(Continued on Page 5)		

DO THE ITEMS BELOW IN THE ORDER LISTED . . . . . FOR DETAILS, GO TO			
39	Enter Message **DGN:LN**xx y**;RAW!** To Diagnose Link Node Determined in Item 2; No Diagnostic Failures Allowed on Phases Run. Wait for **DGN LN**xx y **CATP (X'00000000 X'40000000) MSG COMPLETE** Message xx = Group Number of Link Node Determined in Item 2 y = Member Number of Link Node Determined in Item 2	TELCO/INST	—
40	Recent Change Link Nodes Determined in Items 1 and 2 to OOS (Exit Recent Change)	TELCO	DLP-528
41	At MCRT, Enter **1106** in Command Mode To Obtain Display Page 1106	TELCO	—
42	If Link Nodes Determined in Items 1 and 2 Are Not Displayed, Enter **6**xx (xx = Group Number) in Command To Obtain Proper Display	TELCO	—
43	Ensure 1106 Page Displays Both Link Nodes in OOS State	TELCO	—
44	Enter Message **RST:LN**xx y**;UCL!** To Restore Link Node Determined in Item 1. Ensure **RING RST LN**xx y **COMPLETED** Message Is Received xx = Group Number of Link Node Determined in Item 1 y = Member Number of Link Node Determined in Item 1	TELCO/INST	DLP-531
45	Enter Message **RST:LN**xx y**;UCL!** To Restore Link Node Determined in Item 2. Ensure **RING RST LN**xx y **COMPLETED** Message Is Received xx = Group Number of Link Node Determined in Item 2 y = Member Number of Link Node Determined in Item 2	TELCO/INST	DLP-531
46	If Link Node(s) That Was Restored (Items 44 and/or 45) Is CCS7 or DCHAN, Perform Items 47 and 48; Otherwise, Go to Item 67	TELCO	—
47	Change All Signaling Links (Recorded in Item 26 and/or 30) to IS	TELCO	DLP-529
48	Notify User(s) on Link Node(s) Determined in Items 1 and 2 To Resume Their Activities	TELCO	—
49	Go to Item 67 (Do Not Perform Items 50 Through 66)	TELCO	—
50	Move Padded IFB From Degrowth Link Node to Link Node Determined in Item 1	INST	—
51	Disconnect Cables Between Degrowth Link Node and Link Node Determined in Item 1	INST	—
52	Move Balanced (Interframe) Cables From Degrowth Link Node to Link Node Determined In Item 1	INST	—
	NOTE: If DLN is to be recent changed (Items 53 and 54), RPCD must also be recent changed. The DLPs must be followed to determine proper sequence		
	(Continued on Page 6)		

DO THE ITEMS BELOW IN THE ORDER LISTED			FOR DETAILS, GO TO
53	Recent Change Link Node Determined in Item 1 to UNEQIP (Do Not Exit Recent Change)	TELCO	DLP-540
54	Recent Change hv Value to a Value Associated With Moved Padded IFB (Item 50) and Ring Interface (RI) Type in Link Node Determined in Item 1 and Change Major Status to GROW (Exit Recent Change)	TELCO	DLP-527
55	At MCRT, Enter Message **DGN:LN**xx y**;RAW!** To Diagnose Link Node Determined in Item 1; No Diagnostic Failures Allowed on Phases Run. Wait For **DGN LN**xx y **CATP (X'00000000 X'40000000) MSG COMPLETE** Message xx = Group Number of Link Node Determined in Item 1 y = Member Number of Link Node Determined in Item 1	TELCO/INST	—
56	Recent Change Link Node Determined in Item 1 to OOS (Exit Recent Change)	TELCO	DLP-528
57	At MCRT, Enter **1106** in Command Mode To Obtain Display Page 1106	TELCO	—
58	If Link Node Determined in Item 1 Is Not Displayed, Enter **6**xx (xx = Group Number) in Command Mode To Obtain Proper Display	TELCO	—
59	Ensure 1106 Page Displays Link Node (Item 56) in OOS State	TELCO	—
60	Enter Message **RST:LN**xx y**;UCL!** To Restore Link Node Determined in Item 1. Ensure **RING RST LN**xx y **COMPLETED** Message Is Received xx = Group Number of Link Node Determined in Item 1 y = Member Number of Link Node Determined in Item 1	TELCO/INST	DLP-531
61	If Link Node That Was Restored (Item 60) Is CCS7, or DCHAN, Perform Items 62 Through 64; Otherwise, Go to Item 67	TELCO	—
62	Change All Signaling Links (Recorded in Item 30) to IS	TELCO	DLP-529
63	Notify User(s) on Link Node Determined in Item 1 To Resume Their Activities	TELCO	—
64	Go To Item 67 (Do Not Perform Items 65 and 66)	TELCO	—
	NOTE: Items 65 and 66 are to be performed when degrowth will not cause shelf unit to be completely empty		
65	Disconnect Cables Between Degrowth Link Node(s) and Adjacent Link Nodes, if Connected	INST	—
	(Continued on Page 7)		

DO THE ITEMS BELOW IN THE ORDER LISTED . . . . . FOR DETAILS, GO TO			
66	Move Cables to Bypass Degrowth Link Node(s) per J3FO11E (for RN Cabinet 00 to 32) or J3FO11G (for HDB Cabinet)	INST	—
	CAUTION: If degrowth did not cause shelf unit to be completely empty and an IFB is associated with degrowth link node, the IFB MUST NOT BE REMOVED		
67	Remove Degrowth Link Node(s) Circuit Packs [Do Not Remove **495FA** Power Unit(s)]	INST	—
	NOTE: Two **495FA** power units supply power to each shelf unit. One power unit supplies power to one-half of the shelf unit, and other power unit supplies power to other half. In J3FO11AA shelf unit, left **495FA** power unit supplies power to left link node, and right **495FA** power unit supplies power to right link node		
68	If Link Nodes Associated With at Least One **495FA** Power Unit on Degrowth Shelf Unit Are Not Equipped, Remove **495FA** Power Unit(s) and Associated Fuses	INST	—
69	If CCS7 Link Node(s) Was Degrown, Disconnect Cables Between Link Node(s) and Associated Data Set(s)	INST	—
70	If Shelf Unit Is To Be Removed, Perform Items 71 Through 74; Otherwise, Go to Item 75	INST	—
71	If Shelf Unit Being Removed Is J3FO11DB, J3FO11DC, or J3FO11GB With a T1FA, Disconnect T1 Line Between Shelf Unit and Digital Crossconnect (DSX-1) Frame	INST	—
72	Disconnect Remaining Cables Connected to Degrowth Shelf Unit	INST	—
73	Remove Shelf Unit	INST	—
74	Install Plenum Assembly in Removed Shelf Unit Position	INST	—
75	Install Blanks in Degrowth Link Node(s) Position	INST	—
76	At MCRT, Enter Following Messages To Allow Automatic Diagnostics: • ALW:DMQ;SRC REX! • ALW:DMQ;SRC ADP!	TELCO	—
77	Enter Message OP:RING;DETD! and Ensure No **"i"** Is Listed for Any Link Node (i = Isolated). If Segment Is Isolated, Enter Message CFR:RING!. Ensure NORMAL CONFIGURATION, NO NODES ISOLATED Message Is Received	TELCO	—
	(Continued on Page 8)		

DO THE ITEMS BELOW IN THE ORDER LISTED . . . . . FOR DETAILS, GO TO			
78	At MCC **SYSTEM ALARMS** Panel, Depress **SERVICE DEGRADING FAILURE** Key To Obtain Service Degrading Report Printout. If There Are Any Units Listed, Make Corrective Action To Clear Service Degrading Condition of Each Unit Listed Before Continuing	TELCO	—
79	Verify API-DLN Stream Status (**OP:DLNCM;STREAM!**)	TELCO	DLP-513
80	Copy Incore Equipment Configuration Data Base (ECD) to Disk	TELCO	DLP-519
81	Soak Ring for 12 Hours To Ensure No Problems Exist With System Operation After Degrowth. If Problems Occur and Backout Is Desired, Ensure Degrowth Area Is Isolated. If Degrowth Area Is Not Isolated, at MCRT, Enter Message **CFR:RING,LN**xx y**;EXCLUDE!** for Degrowth Link Node. Contact Appropriate Support Organization for Technical Assistance	TELCO/INST	—
82	Safe Point To Temporarily Stop This Procedure	TELCO	—
83	At MCC **SYSTEM ALARMS** Panel, Depress **SERVICE DEGRADING FAILURE** Key To Obtain Service Degrading Report Printout. If There Are Any Units Listed, Make Corrective Action To Clear Service Degrading Condition of Each Unit Listed Before Continuing	TELCO	—
84	At MCRT, Enter Message **OP:RING;DETD!** and Ensure No **"i"** Is Listed for Any Link Node (i = Isolated)	TELCO	—
85	Verify API-DLN Stream Status (**OP:DLNCM;STREAM!**)	TELCO	DLP-513
86	Run File System Audits To Ensure No File System Errors	TELCO	DLP-520
87	Update Backup Data Base	TELCO	DLP-521
88	Write 3B Computer Backup Tapes	TELCO	DLP-522
89	Verify Backup Tapes	TELCO	DLP-525

DO THE ITEMS BELOW IN THE ORDER LISTED . . . . . FOR DETAILS, GO TO

		RESPONSIBILITY	
	NOTE: DCHAN Link Nodes must already be grown and equipped with Link Interface packs to support primary and secondary signaling links		
1	Request From CNI Data Base Administrator Following Values for Each DCHAN Signaling Link (Primary and Secondary) Being Used for DCHAN Backup. Record Values for Later Use: • Group Number (00 or 32) (One Signaling Link Will Be in 00 and the Other in 32) • Member Number (01 Through 15) • Link Interface Circuit Pack (0 or 1) • Signaling Link (0 Through 3) • Link Access Identifier (LACID)	TELCO	—
2	Request Appropriate Administration Center To Perform Following Recent Changes for Each DCHAN Signaling Link (Primary and Secondary) Being Used for DCHAN Backup: • Establish DCHAN Service Circuit Trunk Subgroup for Connecting DCHAN Node to the ***4ESS***™ Switch, if Not Already Built • Assign LACID Value of Port TANs (PTANs) for DCHAN Signaling Link Pair (RC Form 207) • Assign Customer TANs (CTANs) for DCHAN Signaling Link Pair (RC Form 200) • Nailup Primary and Secondary DCHAN Connections Between CTAN and PTAN Through the Switch (RC Form 205)	TELCO	—
3	Request From Appropriate Administration Center the Following Service Circuit and Customer Trunk Information for Each DCHAN Signaling Link (Primary and Secondary) Being Used for DCHAN Backup. Record Information for Later Use: • Nailup TAN for Each DCHAN Signaling Link of Signaling Link Pair • CIN for Each DCHAN Signaling Link of Signaling Link Pair	TELCO	—
4	Verify Proper CIN and TAN Assignments for Customer Trunks and Service Circuits Associated With Backup DCHAN Growth. Record Information for Later Use (**VER:TRK:LACID** a!)	TELCO	DLP-544
5	Verify Nailup Information Is Correct. Record Information for Later Use (**VER:NAILUP;ALL!**)	TELCO	DLP-559
6	At MTC Channel, Enter Message **VER:TRKNAME,CIN** a**;DETL!** (a = CIN of Primary Service Circuit Recorded in Item 3)	TELCO	—
7	Using Printout (Item 6), Ensure Listed TAN Is Same as Primary Service Circuit TAN Recorded in Item 5	TELCO	—
	(Continued on Page 2)		

ESTABLISH D-CHANNEL SIGNALING LINKS FOR DCHAN BACKUP

DO THE ITEMS BELOW IN THE ORDER LISTED . . . . . FOR DETAILS, GO TO			
8	At MTC Channel, Enter Message **VER:TRKNAME,CIN** a**;DETL!** (a = CIN of Primary Customer Trunk Recorded in Item 3)	TELCO	—
9	Using Printout (Item 8), Ensure Listed TAN Is Same as Primary Customer Trunk TAN Recorded in Item 5	TELCO	—
10	At MTC Channel, Enter Message **OP:TRKSTAT,CIN** a! (a = CIN of Primary Service Circuit Recorded in Item 3) and Ensure Trunk Is in CAD.DSA State	TELCO	—
11	Enter Message **OP:TRKSTAT,CIN** a! (a = CIN of Primary Customer Trunk Recorded in Item 3) and Ensure Trunk Is in CAD.DSA State	TELCO	—
12	Enter Message **VER:TRKNAME,CIN** a**;DETL!** (a = CIN of Secondary Service Circuit Recorded in Item 3)	TELCO	—
13	Using Printout (Item 12), Ensure Listed TAN Is Same as Secondary Service Circuit TAN Recorded in Item 5	TELCO	—
14	At MTC Channel, Enter Message **VER:TRKNAME,CIN** a**;DETL!** (a = CIN of Secondary Customer Trunk Recorded in Item 3)	TELCO	—
15	Using Printout (Item 14), Ensure Listed TAN Is Same as Secondary Customer Trunk TAN Recorded in Item 5	TELCO	—
16	At MTC Channel, Enter Message **OP:TRKSTAT,CIN** a! (a = CIN of Secondary Service Circuit Recorded in Item 3) and Ensure Trunk Is in CAD.DSA State	TELCO	—
17	Enter Message **OP:TRKSTAT,CIN** a! (a = CIN of Secondary Customer Trunk Recorded in Item 3) and Ensure Trunk Is in CAD.DSA State	TELCO	—
18	At MCRT, Depress **NORM/DISP** (**PF2**) Key and Enter **1106** in Command Mode To Obtain Display Page 1106	TELCO	—
19	Enter **600** in Command Mode To Obtain Group Display 00	TELCO	—
20	If Link Node Recorded in Item 1 Is Not Displayed, Enter **403** (for Next) or **404** (for Previous) in Command Mode Until Link Node Is Displayed	TELCO	—
21	Ensure Major State for Link Node (Item 20) Is ACT	TELCO	—
22	Enter **632** in Command Mode To Obtain Group Display 32	TELCO	—

DO THE ITEMS BELOW IN THE ORDER LISTED			FOR DETAILS, GO TO
23	If Link Node Recorded in Item 1 Is Not Displayed, Enter **403** (for Next) or **404** (for Previous) in Command Mode Until Link Node Is Displayed	TELCO	—
24	Ensure Major State for Link Node (Item 23) Is ACT	TELCO	—
25	At MCC **SYSTEM ALARMS** Panel, Depress **SERVICE DEGRADING FAILURE** Key To Obtain Service Degrading Report Printout. If There Are Any Units Listed, Make Corrective Action To Clear Service Degrading Condition of Each Unit Listed Before Continuing	TELCO	—
26	At MCRT, Enter Message **OP:RING;DETD!** and Ensure No **"i"** Is Listed For Any Link Node (i = Isolated)	TELCO	—
27	Enter Message **OP:SLK (a,b):DEST 1!** a = Group Number Containing Secondary Signaling Link (Item 1) b = Member Number of Link Node Containing Secondary Signaling Link (Item 1)	TELCO	—
28	If ROP Printout (Item 27) Shows Major State for Secondary Signaling Link (Item 1) in UNEQ State, Go to Item 33	TELCO	—
29	If ROP Printout (Item 27) Shows Secondary Signaling Link (Item 1) in IS State, Perform Items 30 and 31; Otherwise, Go to Item 32	TELCO	—
30	Notify User on Signaling Link (Item 29) That Their Link Will Be Temporarily Down	TELCO	—
31	At MCRT, Enter Message **CHG:SLK (a,b,c,d);MOOS;UCL!** and Ensure **NEW MINOR STATE** Is **MOOS** a = Group Number Containing Secondary Signaling Link (Item 1) b = Member Number of Link Node Containing Secondary Signaling Link (Item 1) c = Link Interface Circuit Pack Number Containing Secondary Signaling Link (Item 1) d = Secondary Signaling Link Number (Item 1)	TELCO	—
32	Change Major State of Secondary Signaling Link to UNEQ Using Data Base Management System (DMS)	TELCO	DLP-546
33	Change Link Interface Data for Secondary Signaling Link to Initial Values Using DMS	TELCO	DLP-547
34	At MCRT, Enter Message **OP:SLK (a,b):DEST 1!** a = Group Number Containing Primary Signaling Link (Item 1) b = Member Number of Link Node Containing Primary Signaling Link (Item 1)	TELCO	—
35	If ROP Printout (Item 34) Shows Primary Signaling Link (Item 1) in IS State, Perform Items 36 and 37; Otherwise, Go to Item 38	TELCO	—

DO THE ITEMS BELOW IN THE ORDER LISTED . . . . . FOR DETAILS, GO TO			
36	Notify User on Signaling Link (Item 35) That Their Link Will Be Temporarily Down	TELCO	—
37	At MCRT, Enter Message **CHG:SLK (a,b,c,d);MOOS;UCL!** and Ensure **NEW MINOR STATE** Is **MOOS** a = Group Number Containing Primary Signaling Link (Item 1) b = Member Number of Link Node Containing Primary Signaling Link (Item 1) c = Link Interface Circuit Pack Number Containing Primary Signaling Link (Item 1) d = Primary Signaling Link Number (Item 1)	TELCO	—
38	Change Link Interface Data for Primary and Secondary Signaling Links Using DMS	TELCO	DLP-548
39	At MCRT, Enter Message **CHG:SLK (a,b,c,d);TEST!** (a,b,c,d = Primary Signaling Link Variables — Item 37) and Ensure **NEW MINOR STATE** Is **TEST**	TELCO	—
40	Enter Message **LKC:SLK (a,b,c,d);LCKI!** (a,b,c,d = Same Variables Entered in Item 39) To Test Primary Signaling Link to the T1FA. Ensure **SLK a b c d LINK CHECK INTERNAL PASSED** Message Is Received	TELCO	—
41	Enter Message **CHG:SLK (a,b,c,d);GROW !** (a,b,c,d = Same Variables Entered in Item 39) and Ensure **NEW MINOR STATE** Is **GROW**	TELCO	—
42	Enter Message **CHG:SLK (a,b,c,d);TEST !** (a,b,c,d = Secondary Signaling Link Variables — Item 31) and Ensure **NEW MINOR STATE** Is **TEST**	TELCO	—
43	Enter Message **LKC:SLK (a,b,c,d);LCKI!** (a,b,c,d = Same Variables Entered in Item 42) To Test Secondary Signaling Link to the T1FA. Ensure **SLK a b c d LINK CHECK INTERNAL PASSED** Message Is Received	TELCO	—
44	Enter Message **CHG:SLK (a,b,c,d);GROW !** (a,b,c,d = Same Variables Entered in Item 42) and Ensure That **NEW MINOR STATE** Is **GROW**	TELCO	—
	NOTE: When major state for primary or secondary signaling link is changed to avail, that signaling link will be restored to IS		
45	Change Major State for Primary and Secondary Signaling Links to avail Using DMS	TELCO	DLP-549
46	At MCRT, Enter **1108** in Command Mode To Obtain Display Page 1108	TELCO	—
47	Enter **430** (for Next) or **431** (for Previous) in Command Mode Until Secondary Signaling Link Is Displayed	TELCO	—
48	Ensure Signaling Link (Item 47) Is in IS State	TELCO	—

DO THE ITEMS BELOW IN THE ORDER LISTED . . . . . FOR DETAILS, GO TO			
49	Enter **430** (for Next) or **431** (for Previous) in Command Mode Until Primary Signaling Link Is Displayed	TELCO	—
50	Ensure Signaling Link (Item 49) Is in IS State	TELCO	—
51	Enter Message **CHG:SLK (a,b,c,d);STBY!** (a,b,c,d = Secondary Signaling Link Variables — Item 31) and Ensure **NEW MINOR STATE** Is **IS STBY**	TELCO	—
52	If 1108 Page Is Not Displayed, Enter **1108** in Command Mode and Ensure Primary Signaling Link Is Still Displayed	TELCO	—
53	Enter Message **CHG:SLK (a,b,c,d);IS!** (a,b,c,d = Secondary Signaling Link Variables — Item 31) and Ensure **NEW MINOR STATE** Is **IS**	TELCO	—
54	Using 1108 Display Page, Ensure Primary Signaling Link LINK STATE Switched to STBY	TELCO	—
55	Enter **430** (for Next) or **431** (for Previous) in Command Mode Until Secondary Signaling Link Is Displayed	TELCO	—
56	Enter Message **CHG:SLK (a,b,c,d);IS!** (a,b,c,d = Primary Signaling Link Variables — Item 37) and Ensure **NEW MINOR STATE** Is **IS**	TELCO	—
57	Using 1108 Display Page, Ensure Secondary Signaling Link LINK STATE Switched to STBY	TELCO	—
58	Notify Users on New Signaling Links To Resume Their Activities	TELCO	—
59	Copy Incore Equipment Configuration Data Base (ECD) to Disk	TELCO	DLP-519
60	Run File System Audits To Ensure No File System Errors	TELCO	DLP-520
61	Update Backup Data Base	TELCO	DLP-521
62	Write 3B Computer Backup Tapes	TELCO	DLP-522
63	Verify Backup Tapes	TELCO	DLP-525

DO THE ITEMS BELOW IN THE ORDER LISTED . . . . . FOR DETAILS, GO TO

		RESPONSIBILITY	
	WARNING: An antistatic wrist strap must be worn to prevent electrostatic discharge and possible damage to circuit packs while handling		
	NOTES: 1. This procedure must be performed during light traffic periods 2. This procedure contains a soak interval for verifying system operation and stability during growth. During the soak interval, all abnormal conditions (such as interrupts, interjects, and diagnostic failures related to growth) must be investigated and resolved immediately. Growth equipment, being soaked, must be error free for at least 12 hours. **No other growth activity can take place until this soak is complete** 3. Throughout this procedure, the following term, **LNxx yy**, is used where: **xx = Group Number** **yy = Member Number**		
1	Ensure Room Is Available for Shelf(s) To Be Relocated; One Shelf Position Up in the Ring Node Cabinet (RNC)	INST	—
2	Ensure All Cables, Power Units, and Circuit Packs for Growth Link Node(s) Are Available	INST	—
3	Verify System Status	TELCO	DLP-542
4	Perform Preliminary Installation Activities	INST	—
5	Safe Point To Temporarily Stop This Procedure	INST	—
6	If Procedure Was Stopped (Item 5), Verify System Status	TELCO	DLP-542
7	At MCRT, Enter Following Messages To Inhibit Automatic Diagnostics: • INH:DMQ;SRC REX! • INH:DMQ;SRC ADP!	TELCO	—
8	Perform the Following To Ensure Clean File System Before Starting Growth:		
	1. Copy Incore Equipment Configuration Data Base (ECD) to Disk	TELCO	DLP-519
	2. Run File System Audits To Ensure No File System Errors	TELCO	DLP-520
	3. Update Backup Data Base	TELCO	DLP-521
	(Continued on Page 2)		

DO THE ITEMS BELOW IN THE ORDER LISTED . . . . . FOR DETAILS, GO TO			
	NOTE: Only one shelf unit relocation can be completed prior to entering the soak interval. If there are other link nodes to be grown into another shelf unit, this procedure must be repeated		
9	Determine Nodes Associated With Shelf Unit Being Relocated and Remove From Service:		
	A. At MCRT, Enter **1106** in Command Mode To Obtain the 1106 Display Page	TELCO	—
	B. Using the 1106 Page, Determine All Nodes Equipped in the Shelf To Be Relocated	TELCO	—
	C. If Any Link Node Determined in Item 9B Is CCS7, or DCHAN:		
	1. Notify Users on the Link Node Determined in Item 9B That Their Signaling Links Will Be Temporarily Removed From Service	TELCO	—
	2. Change Active Signaling Link(s) on the Link Node Determined in Item 9B to MOOS [Record Modified Signaling Link(s) for Later Use]	TELCO	DLP-526
	D. At MCRT, Enter Message **RMV:LNxx yy!** To Remove All Link Nodes in Item 9B	TELCO	—
10	At MCRT, Enter Message **CFR:RING,LNxx yy;EXCLUDE!** To Isolate Shelf Being Relocated	TELCO	DLP-536
11	At RNC, Remove All Circuit Packs Except Power Units From Shelf Being Relocated and Record Location	INST	—
12	Remove **495FA/410AA** Power Units From Shelf Being Relocated	INST	—
	CAUTION: Use extreme care when removing fuses. A service interruption will occur if the wrong fuse is pulled		
13	Remove Indicator Fuses and Then Load Fuses Associated With Shelf Being Relocated	INST	—
14	Remove Balanced/Unbalanced Cables and Any Interface Cable Connected to Shelf Being Relocated. Ensure Each Cable Removed Is Tagged	INST	—
	CAUTION: Use extreme care when removing and replacing shelf. Other nodes in CNI Ring are still active		
15	Unmount and Remove Shelf Unit From RNC	INST	—
16	Mount New Shelf in Open Position Created by Relocated Shelf Unit	INST	—
17	Remount Removed Shelf Unit at Next Higher Position in RNC	INST	—
	(Continued on Page 3)		

DO THE ITEMS BELOW IN THE ORDER LISTED . . . . . FOR DETAILS, GO TO			
18	Connect Balanced Cables to IFB in Relocated Shelf Unit	INST	—
19	Connect Any Interface Cables to Nodes in Relocated Shelf Unit	INST	—
20	Determine Node Position(s) To Be Grown as IUN(s) in New Shelf Unit	TELCO	—
21	Connect New Unbalanced Cable From Highest-Equipped Node Position in New Shelf Unit to Relocated Shelf Unit	INST	—
22	Connect Existing Cables From Lowest-Equipped Node Position in New Shelf Unit to Highest-Equipped Node in Adjacent Lower Shelf Unit	INST	—
23	Install Fuses for Both Relocated Shelf Unit And New Shelf Unit	INST	—
24	Seat **495FA/410AA** Power Units in Relocated Shelf Unit. Ensure RNC Alarm Is Activated	INST	—
25	At RNC, Depress **ALARM RESET** To Clear Power Alarm. At MCRT, Depress **ALM RLS (PF4)** Key To Silence Audible Alarm	INST	—
26	At RNC, Seat **495FA/410AA** Power Units in New Shelf Unit. Ensure RNC Alarm Is Activated	INST	—
27	At RNC, Depress **ALARM RESET** To Clear Power Alarm. At MCRT, Depress **ALM RLS (PF4)** Key To Silence Audible Alarm	INST	—
28	Insert Remaining Circuit Packs in Relocated Shelf Unit. Refer To Item 11 To Determine Proper Locations	INST	—
29	Insert Circuit Packs Associated With IUN(s) To Be Grown in New Shelf Unit	INST	—
30	At MCRT, Recent Change IUN Node(s) From UNEQIP to GROW and Update Node-Specific Variable, as Required (Exit Recent Change)	TELCO	DLP-541
31	Enter Message **DGN:LNxx yy;RAW!** To Diagnose Each Node in Relocated Shelf and IUN(s) in New Shelf Unit. No Diagnostic Failures Are Allowed	TELCO	—
32	Recent Change Each Growth Link Node From GROW to OOS	TELCO	DLP-509
33	Enter Message **CFR:RING!** To Return Ring Configuration to Normal State	TELCO	DLP-530
34	At MCRT, If 1106 Page Is Not Displayed, Enter 1106 in Command Mode	TELCO	—
	(Continued on Page 4)		

DO THE ITEMS BELOW IN THE ORDER LISTED . . . . . FOR DETAILS, GO TO			
35	Unconditionally (Previously Diagnosed In Item 34), Restore Each Growth Link Node in Relocated Unit and New Shelf Unit to Service as Follows:		
	A. At MCRT, Enter Message **RST:LNxx yy;UCL!**	TELCO	—
	B. If Any Link Node Just Restored Was CCS7, or DCHAN:		
	1. Change Signaling Link(s) Recorded in Item 9C to IS	TELCO	DLP-529
	2. Notify Users on the Link(s) Just Restored to Service To Resume Their Activities	TELCO	—
36	Copy Incore ECD to Disk	TELCO	DLP-519
37	At MCRT, Enter the Following Messages To Allow Automatic Diagnostics: • **ALW:DMQ;SRC REX!** • **ALW:DMQ;SRC ADP!**	TELCO	—
38	Run File System Audits To Ensure No File System Errors	TELCO	DLP-520
39	Update Backup Data Base	TELCO	DLP-521
40	If Link Node(s) Is To Be Grown in the New Shelf Unit at This Time, Perform Items 42 and 43; Otherwise Go to Item 44	TELCO/INST	—
41	Soak New and Relocated Shelf Units for a Minimum of 1 Hour To Ensure That No Problems Exist With System Operation	TELCO/INST	—
42	Grow Link Node(s) per Appropriate Node Growth Procedure. End of Procedure	TELCO/INST	—
43	Soak Growth Ring Hardware for a Minimum of 12 Hours To Ensure No Problems Exist With System Operation	TELCO/INST	—
44	Following Completion of All Growth Activities for This Job:		
	1. Write 3B Computer Backup Tapes	TELCO	DLP-522
	2. Verify Backup Tapes	TELCO	DLP-525

DO THE ITEMS BELOW IN THE ORDER LISTED . . . . . FOR DETAILS, GO TO

		RESPONSIBILITY	
	WARNING: An antistatic wrist strap must be worn to prevent electrostatic discharge and possible damage to circuit packs while handling		
	NOTES: 1. AMA data should be transferred (tape and/or teleprocessing) prior to start of each night's growth activity 2. This procedure should be performed during light traffic periods 3. This procedure contains soak interval for verifying system operation and stability during growth. During the soak interval, all abnormal conditions (such as interrupts, interjects, and diagnostic failures related to growth) must be investigated and resolved immediately. Growth equipment, being soaked, must be error free for at least the time specified		
1	Ensure Room Is Available for Growth Link Node(s) [LN(s)] or Shelf Unit in Ring Node Cabinet	INST	—
2	Ensure All Cables and Circuit Packs for Growth Link Nodes Are Available	INST	—
3	If Shelf Unit Is Needed, Ensure Shelf Unit Is Available	INST	—
4	Verify System Status	TELCO/INST	DLP-542
5	Perform Preliminary Installation Activities	INST	—
6	Safe Point To Temporarily Stop This Procedure	TELCO/INST	—
7	Verify System Status	TELCO/INST	DLP-542
8	At MCRT, Enter Following Messages To Inhibit Automatic Diagnostics: • INH:DMQ;SRC REX! • INH:DMQ;SRC ADP!	TELCO	—
	NOTE: Item 9 through 11 are being performed to ensure clean file system before starting growth		
9	Copy Incore Equipment Configuration Data Base (ECD) to Disk	TELCO	DLP-519
10	Run File System Audits To Ensure No File System Errors	TELCO	DLP-520
11	Update Backup Data Base	TELCO	DLP-521
	(Continued on Page 2)		

DO THE ITEMS BELOW IN THE ORDER LISTED . . . . . FOR DETAILS, GO TO			
	NOTES: 1. Only link nodes associated with one shelf unit can be grown at a time. If there are other link nodes to be grown into another shelf unit, this procedure must be repeated 2. Data to be entered in item 12 may have been entered earlier by remote data base organization		
12	Populate Office-Dependent Link Data Files and Verify (Except IUN Link Node)	TELCO	DLP-543
13	Verify Each Growth Link Node (Except IUN) Is Displayed on Ring Status Page 1108	TELCO	DLP-564
14	At MCRT, Enter Message **OP:RING;DETD!** and Ensure No **"i"** Is Listed for Any Link Node (i = Isolated). Only One Area on CNI Ring Can Be Isolated at a Time. If Any Link Node Is Isolated, That Link Node Will Have To Be Restored Before Continuing	TELCO	—
15	If Link Node Is Being Grown Between Two Equipped Link Nodes Containing Ring Peripheral Controller Node (RPCN) and Direct Link Node (DLN), Go to Item 62	TELCO	—
16	If Growth Link Node Will Be Highest Equipped Link Node in Cabinet and Interframe Buffer (IFB) Will Have To Be Moved, Go to Item 29	TELCO	—
17	If Link Node(s) Is Being Grown Between Two Equipped Link Nodes Containing Interframe Buffers (IFBs), Perform Items 18 Through 42; Otherwise, Go To Item 43	TELCO	—
18	Using 1108 Page, Determine Next Higher Equipped Link Node Number to Growth Link Node	TELCO	—
19	If Link Node Determined in Item 18 Is CCS7 or DCHAN, Perform Items 20 Through 22; Otherwise, Go to Item 23	TELCO	—
20	Notify Users on Link Node Determined in Item 18 That Their Signaling Link Will Be Temporarily Down	TELCO	—
21	Change Active Signaling Link(s) in Link Node Determined in Item 18 to MOOS (Record Signaling Link(s) That Was Changed for Later Use)	TELCO	DLP-526
22	Go to Item 28	TELCO	—
23	If Link Node Determined in Item 18 Is a Direct Link Node (DLN), Perform Items 24 Through 27; Otherwise, Go to Item 28	TELCO	—
24	At MCRT, Enter **1107** in Command Mode To Obtain Display Page 1107	TELCO	—
25	Using 1107 Page, Determine if Direct Link Node (Item 18) Is STBY	TELCO	—

DO THE ITEMS BELOW IN THE ORDER LISTED . . . . . FOR DETAILS, GO TO			
26	If Direct Link Node Is Not STBY, Enter Message **SW:DLN,LN**aa b**,LN**cc d! aa = Group Number of DLN (Item 18) b = Member Number of DLN (Item 18) cc = Group Number of Standby DLN d = Member Number of Standby DLN	TELCO	—
27	Wait 15 Minutes To Ensure New Active Direct Link Node Is Stable	TELCO	—
28	At MCRT, Enter Message **RMV:**a! To Remove Link Node Determined in Item 18. Ensure **RING RMV** a **COMPLETED** Message Is Received a = **RPCN**xx **0** (for Ring Peripheral Controller Node) or **LN**xx y (for All Other Link Nodes) xx = Group Number y = Member Number	TELCO	—
29	Enter **1108** in Command Mode To Obtain Display Page 1108	TELCO	—
30	Using 1108 Page, Determine Next Lower Numbered Equipped Link Node From Growth Link Node	TELCO	—
31	If Link Node Determined in Item 30 Is CCS7 or DCHAN, Perform Items 32 Through 34; Otherwise, Go to Item 35	TELCO	—
32	Notify Users on Link Node Determined in Item 30 That Their Signaling Link Will Be Temporarily Down	TELCO	—
33	Change Active Signaling Link(s) in Link Node Determined in Item 30 to MOOS (Record Signaling Link(s) That Was Changed for Later Use)	TELCO	DLP-526
34	Go to Item 42	TELCO	—
35	If Link Node Determined in Item 30 Is a Direct Link Node (DLN), Perform Items 36 Through 41; Otherwise, Go to Item 42	TELCO	—
36	At MCRT, Enter **1107** in Command Mode To Obtain Display Page 1107	TELCO	—
37	Using 1107 Page, Determine if Direct Link Node (Item 30) Is STBY	TELCO	—
38	If Direct Link Node Is Not STBY, Enter Message **SW:DLN,LN**aa b**,LN**cc d! aa = Group Number of DLN (Item 30) b = Member Number of DLN (Item 30) cc = Group Number of Standby DLN d = Member Number of Standby DLN	TELCO	—

DO THE ITEMS BELOW IN THE ORDER LISTED			FOR DETAILS, GO TO
39	Wait 15 Minutes To Ensure New Active Direct Link Node Is Stable	TELCO	—
40	At MCRT, Enter **1108** in Command Mode To Obtain Display Page 1108	TELCO	—
41	If Ring Node Frame Group for Link Node Determined in Item 30 Is Not Displayed on 1106 Page, Enter **6**xx (xx = Ring Node Frame Group)	TELCO	—
42	At MCRT, Enter Message **RMV:**a**!** To Remove Link Node Determined in Item 30. Ensure **RING RMV** a **COMPLETED** Message Is Received a = **RPCN**xx **0** (for Ring Peripheral Controller Node) or **LN**xx y (for All Other Link Nodes) xx = Group Number y = Member Number	TELCO	—
43	Enter Message **CFR:RING,LN**xx y**;EXCLUDE!** To Isolate Growth Link Node and Ensure **RING CFR RING LN**xx y **COMPL** Message Is Received xx = Group Number y = Member Number	TELCO	DLP-539
44	If Growth Link Node Is Now Highest Numbered Link Node in Frame or Is Being Grown Between Two Equipped Link Nodes Containing Interframe Buffers (IFBs), Perform Option A or B:		
	NOTE: If DLN is to be recent changed, RPCD may also require being recent changed. The DLPs must be followed to determine proper sequence		
	A. If Growth Link Node Is Now Highest Link Node in Frame:		
	1. If Interframe Buffer Pack Is Required To Be Moved to Highest Growth Link Node in Cabinet, Move Interframe Buffer Pack	INST	—
	2. Recent Change Link Node That Was Highest Link Node in Cabinet Before Growth to UNEQIP (Do Not Exit Recent Change)	TELCO	DLP-540
	3. Recent Change hv Value for Link Node (Item 44.A.2) and Change Major Status to GROW (Do Not Exit Recent Change)	TELCO	DLP-527
	4. Recent Change Link Node (Item 44.A.2) to OOS (Do Not Exit Recent Change)	TELCO	DLP-528
	B. If Growth Link Node(s) Is Being Grown Between Two Interframe Buffers:		
	1. Remove Two Interframe Buffer Packs	INST	—
	(Continued on Page 5)		

DO THE ITEMS BELOW IN THE ORDER LISTED . . . . . FOR DETAILS, GO TO			
44 (Contd)	2. Recent Change Next Higher Numbered Link Node to Growth Link Node in Cabinet to UNEQIP (Do Not Exit Recent Change)	TELCO	DLP-540
	3. Recent Change hv Value for Link Node (Item 44.B.2) and Change Major Status to GROW (Do Not Exit Recent Change)	TELCO	DLP-527
	4. Recent Change Link Node (Item 44.B.2) to OOS (Do Not Exit Recent Change)	TELCO	DLP-528
	5. Recent Change Next Lower Numbered Link Node to Growth Link Node in Cabinet to UNEQIP (Do Not Exit Recent Change)	TELCO	DLP-540
	6. Recent Change hv Value for Link Node (Item 44.B.5) and Change Major Status to GROW (Do Not Exit Recent Change)	TELCO	DLP-527
	7. Recent Change Link Node (Item 44.B.5) to OOS (Do Not Exit Recent Change)	TELCO	DLP-528
	C. Move TN1803 (IFB) From Current Top Position to New Top Position	INST	—
45	If Shelf Units(s) Are Vacant Between Existing Shelf and Growth Shelf:		
	1. Install TN918 in Old TN1803 Location	INST	—
	2. Install TN918 in Position 10-1 or 42-1	INST	—
	3. Connect Balanced Cable Between TN918s	INST	—
46	Recent Change Each Growth Link Node From UNEQIP to GROW and hv, mv, and packcode, as Required (Exit Recent Change)	TELCO	DLP-541
47	Connect Unbalanced (Intraframe) Bus Cables and Balanced (Interframe) Cables (if Required) for Growth Link Node(s)	INST	—
48	Install Fuses and Seat **495FA** Power Unit(s) Associated With Growth Link Node(s), if Required	INST	—
49	Depress **ALARM RESET** Key on Each Ring Node Frame Power Control Unit To Clear Power Alarm	TELCO	—
50	At MCRT, Depress **ALM RLS** (**PF4**) Key To Silence Audible Alarm	TELCO	—
51	Seat Circuit Boards for Growth Link Node(s)	INST	—
52	If Link Node Was Removed in Item 42, Perform Items 53 Through 56; Otherwise, Go to Item 57	TELCO/INST	—
	(Continued on Page 6)		

DO THE ITEMS BELOW IN THE ORDER LISTED			FOR DETAILS, GO TO
53	At MCRT, Enter Message **RST:**a**!** To Restore Link Node Removed in Item 42. Ensure **RING RST** a **COMPLETED** Message Is Received a = **RPCN**xx **O** (for Ring Peripheral Controller Node) or **LN**xx y (for All Other Link Nodes) xx = Group Number y = Member Number	TELCO/INST	—
54	If Link Node Restored in Item 53 Is CCS7 or DCHAN, Perform Items 55 and 56; Otherwise, Go to Item 57	TELCO	—
55	Change Signaling Link(s), Recorded in Item 33, to IS	TELCO	DLP-529
56	Notify Users on Link Node (Item 53) To Resume Their Activities	TELCO	—
57	If Growth Link Node(s) Is Being Grown Between Two Equipped Link Nodes That Contain Interframe Buffers (IFBs), Perform Items 58 Through 61; Otherwise, Go to Item 62	TELCO/INST	—
58	At MCRT, Enter Message **RST:**a**!** To Restore Link Node Removed in Item 28. Ensure **RING RST** a **COMPLETED** Message Is Received a = **RPCN**xx **O** (for Ring Peripheral Controller Node) or **LN**xx y (for All Other Link Nodes) xx = Group Number y = Member Number	TELCO/INST	—
59	If Link Node Restored in Item 58 Is CCS7 or DCHAN, Perform Items 60 and 61; Otherwise, Go to Item 62	TELCO	—
60	Change Signaling Link(s), Recorded in Item 21, to IS	TELCO	DLP-529
61	Notify Users on Link Node (Item 58) To Resume Their Activities	TELCO	—
62	Go to Item 86	TELCO/INST	—
63	Enter **1106** in Command Mode To Obtain Display Page 1106	TELCO	—
64	Using **1106** Page, Determine Next Higher Numbered Equipped Link Node From Growth Link Node	TELCO	—
65	Using **1106** Page, Determine Next Lower Numbered Equipped Link Node From Growth Link Node	TELCO	—
66	Enter **1107** in Command Mode To Obtain Display Page 1107	TELCO	—
67	Using **1107** Page, Determine if Direct Link Node (Item 64) Is STBY	TELCO	—
	(Continued on Page 7)		

DO THE ITEMS BELOW IN THE ORDER LISTED . . . . . FOR DETAILS, GO TO			
68	If Direct Link Node Is Not STBY, Enter Message **SW:DLN,LN**aa b,**LN**cc d! aa = Group Number of DLN (Item 64) b = Member Number of DLN (Item 64) cc = Group Number of Standby DLN d = Member Number of Standby DLN	TELCO	—
69	Wait 15 Minutes To Ensure New Active Direct Link Node Is Stable	TELCO	—
70	At MCRT, Enter message **RMV:LN**xx y! To Remove DLN Determined in Item 64. Ensure **RING RMV LN**xx y **COMPLETED** Message Is Received xx = Group Number of DLN (Item 64) y = Member Number of DLN (Item 64)	TELCO	—
71	At MCRT, Enter Message **RMV:RPCN**xx **O!** To Remove Link Node Determined in Item 65. Ensure **RING RMV RPCN**xx **O COMPLETED** Message Is Received xx = Group Number of RPCN (Item 65)	TELCO	—
72	Enter Message **CFR:RING,LN**xx y;**EXCLUDE!** To Isolate Growth Link Node and Ensure **RING CFR RING LN**xx y **COMPL** Message Is Received xx = Group Number y = Member Number	TELCO	DLP-539
73	Connect Unbalanced (Intraframe) Bus Cables and Balanced (Interframe) Cables (if Required) for Growth Link Node(s)	INST	—
74	Install Interframe Buffer Packs at Growth Link Node and DLN	INST	—
75	Seat **495FA** Power Unit Associated With Growth Link Node(s), if Required	INST	—
76	Depress **ALARM RESET** Key on Each Ring Node Frame Power Control Unit To Clear Power Alarm	TELCO	—
77	At MCRT, Depress **ALM RLS (PF4)** Key To Silence Audible Alarm	TELCO	—
78	Seat Circuit Boards for Growth Link Node	INST	—
	NOTE: RPCD must be recent changed when recent changing DLN. The DLPs must be followed to determine proper sequence		
79	Recent Change DLN and Associated RPCD to UNEQIP (Do Not Exit Recent Change)	TELCO	DLP-540
	(Continued on Page 8)		

DO THE ITEMS BELOW IN THE ORDER LISTED			FOR DETAILS, GO TO
80	Recent Change hv Value for RPCD and DLN and Change Major Status to GROW (Do Not Exit Recent Change)	TELCO	DLP-527
	NOTE: RPCD does not require being recent changed to OOS		
81	Recent Change DLN to OOS (Do Not Exit Recent Change)	TELCO	DLP-528
82	Recent Change Growth Link Node From UNEQIP to GROW and hv, mv, and packcode, as Required (Exit Recent Change)	TELCO	DLP-541
83	Diagnose DLN; No Diagnostic Failures Allowed on Phases Run (**DGN:LN**xx y;**RAW!** xx = Group Number of DLN y = Member Number of DLN)	TELCO/INST	—
84	Enter Message **RST:RPCN**xx **0!** To Restore RPCN; Ensure **RING RST RPCN**xx **0 COMPLETED** Message Is Received xx = Group Number of RPCN	TELCO/INST	—
85	Enter Message **RST:LN**xx y;**UCL!** To Restore DLN Unconditionally; Ensure **RING RST COMPLETED** Message Is Received xx = Group Number of DLN y = Member Number of DLN	TELCO/INST	DLP-531
86	If DCHAN Link Node Is Being Grown and **T1FA** Circuit Pack Is Installed, Depress RESET Pushbutton on **T1FA** Circuit Pack	INST	—
87	If CCS7 Link Node Is Being Grown, Set Up Data Link Loopback at Digital Facility Access Frame	INST	—
88	If DCHAN Link Node Is Being Grown, Set Up Loopback at Digital Crossconnect Frame	INST	—
89	Diagnose Each Growth Link Node; No Diagnostic Failures Allowed on Phases Run (**DGN:LN**xx y;**RAW!** xx = Group Number y = Member Number)	TELCO/INST	—
90	Recent Change Each Growth Link Node From GROW to OOS	TELCO	DLP-509
91	Establish Ring Configuration (**CFR:RING!**)	TELCO	DLP-530

DO THE ITEMS BELOW IN THE ORDER LISTED			FOR DETAILS, GO TO
92	At MCRT, if Page 1106 Is Not Displayed, Enter **1106** in Command Mode	TELCO	—
93	Unconditionally Restore Each Growth Link Node	TELCO/INST	DLP-531
94	If CCS7 or DCHAN Link Node Is Being Grown, Test (Prove-in) Growth Associated Signaling Link(s):		
	A. If CCS7 Link Node Is Being Grown	TELCO/INST	DLP-514
	B. If DCHAN Link Node Is Being Grown	TELCO/INST	DLP-515
95	If DCHAN Link Node(s) Is Being Grown, Change Signaling Links in Each Growth DCHAN Link Node to UNEQ Using Data Base Management System	TELCO	DLP-563
96	Copy Incore Equipment Configuration Data Base (ECD) to Disk	TELCO	DLP-519
97	At MCRT, Enter Following Messages To Allow Automatic Diagnostics: • **ALW:DMQ;SRC REX!** • **ALW:DMQ;SRC ADP!**	TELCO	—
98	Soak Growth Ring Hardware for 12 Hours To Ensure No Problems Exist With System Operation After Growth	TELCO/INST	—
99	If Signaling Link(s) Is To Be Activated, Perform Activate Signaling Link(s) on Existing Link Interface Pack Procedure, End of Procedure Upon Completion	TELCO	—
100	Run File System Audits To Ensure No File System Errors	TELCO	DLP-520
101	Update Backup Data Base	TELCO	DLP-521
102	Write 3B Computer Backup Tapes	TELCO	DLP-522
103	Verify Backup Tapes	TELCO	DLP-525

DO THE ITEMS BELOW IN THE ORDER LISTED . . . . . FOR DETAILS, GO TO

		RESPONSIBILITY	
	WARNING: An antistatic wrist strap must be worn to prevent electrostatic discharge and possible damage to circuit packs while handling		
	NOTES: 1. AMA data should be transferred (tape and/or teleprocessing) prior to start of each night's growth activity 2. This procedure must be performed during light traffic periods 3. This procedure contains soak intervals for verifying system operation and stability during growth. During the soak interval, all abnormal conditions (such as interrupts, interjects, and diagnostic failures related to growth) must be investigated and resolved immediately. Growth equipment, being soaked, must be error free for at least the time specified 4. There are two DLNs to be converted per RNC 00 and 32; however, there is only one DLN to convert per nightly growth activity 5. If this procedure is being performed on RNC 00-2, 00-7, 32-2 and 32-7, BWM 970032 containing software tool scripts must be applied before performing procedure		
1	Verify System Status	TELCO/INST	DLP-542
	NOTE: Items 2 through 4 are being performed to ensure clean file system before starting growth		
2	Copy Incore Equipment Configuration Data Base (ECD) To Disk	TELCO	DLP-519
3	Run File System Audits To Ensure No File System Errors	TELCO	DLP-520
4	Update Backup Data Base	TELCO	DLP-521
5	At 3B MCRT, Enter Following Messages To Inhibit Automatic Diagnostics: • INH:DMQ;SRC REX! • INH:DMQ;SRC ADP!	TELCO	—
6	Depress **CMD MSG (PF3)** Key and Enter 1107 in Command Mode To Obtain Display Page 1107	TELCO	—
	NOTES: 1. Node processor (Position 058) circuit packs will be replaced by IRN2 circuit pack 2. The lowest numbered DLN is converted first		
	(Continued on Page 2)		

DO THE ITEMS BELOW IN THE ORDER LISTED . . . . . FOR DETAILS, GO TO			
7	If **APPL STATE** for DLN Being Converted Is **ACT** on 1107 Page, Enter Message **SW:DLN,LNOO a,LNbb c!** a = DLN Number Being Converted bb/c = Group Number/Member Number of a STBY DLN	TELCO	—
8	Enter Message **OP:RING;DETD!** and Ensure No **"i"** Is Listed for Any Link Node (i = Isolated). Only One Area on CNI Ring Can Be Isolated at a Time. If Any Link Node Is Isolated, That Link Node Will Have To Be Restored Before Continuing	TELCO	—
9	Enter Message **RMV:LNOO a!** (a = Member Number of DLN Being Converted in Standby Mode) To Remove DLN. Ensure **RING RMV LNOO a COMPLETED** Message Is Received	TELCO	—
10	Enter Message **DGN:LNOO a;RAW!** (a = Member Number of DLN Being Converted). Ensure **DGN LNOO a ATP MSG COMPLETE** Message Is Received	TELCO	—
11	Ensure 1107 Page Displays **HDWR STATE** as **OOS** for Removed DLN	TELCO	—
12	Enter Message **CFR:RING,LNOO a;EXCLUDE!** (a = Member Number of DLN Being Converted) To Isolate DLN. Ensure **RING CFR LNOO a COMPL** Message Is Received	TELCO	DLP-539
13	Enter **1106** in Command Mode To Obtain Display Page 1106	TELCO	—
14	Enter **400** in Command Mode To Obtain BISO-EISO Screen	TELCO	—
15	Ensure DLN Being Converted Is Isolated	TELCO	—
	NOTE: DLN requires both LN and RPCD ucb entries and must be changed in that order		
16	Recent Change DLN Being Converted and Associated RPCD to UNEQIP	TELCO	DLP-565
17	Enter **1107** in Command Mode To Obtain Display Page 1107	TELCO	—
18	Ensure **HWDR STATE** for DLN Being Converted Is **UNEQUIP**	TELCO	—
19	At DLN Being Converted, Remove UN303B Circuit Pack and Replace With UN304 (MC3F024A1C) Circuit Pack, as Required	TELCO	—
	NOTE: RPCD data must be recent changed before DLN data. While recent changing RPCD and DLN, hv and mv values and packcode should be recorded in case backout is required		
20	Recent Change hv and mv Values and packcode for RPCD and DLN Being Converted. Change Major Status to **GROW** (If Backout is Required, use DLP-568)	TELCO	DLP-566
	(Continued on Page 3)		

DO THE ITEMS BELOW IN THE ORDER LISTED . . . . . FOR DETAILS, GO TO			
21	On 1107 Page, Ensure **HDWR STATE** for DLN Being Converted Is **GROW**	TELCO	—
22	Enter Message **DGN:LNOO a;RAW!** (a = Member Number of DLN Being Converted); No Diagnostic Failures Allowed on Phases Run. Wait for **DGN LNOO a ATP MSG COMPLETE** Message	TELCO	—
23	Enter Message **SW:CU!** To Switch CUs	TELCO	—
24	Enter Message **DGN:LNOO a;RAW!** (a= Member Number of DLN Being Converted); No Diagnostic Failures Allowed on Phases Run. Wait for **DGN LNOO a ATP MSG COMPLETE** Message	TELCO	—
	NOTE: RPCD does not require being recent changed OOS		
25	Recent Change DLN Being Converted to **OOS**	TELCO	DLP-567
26	Enter **1107** in Command Mode To Obtain Display Page 1107	TELCO	—
27	Ensure **HWDR STATE** for DLN Being Converted Is **OOS**	TELCO	—
28	Redip Equipment Configuration Data Base (ECD) and Pump Converted DLN	TELCO	DLP-569
29	Enter Message **RST:LNOO a;UCL!** (a = Member Number of DLN Being Converted) To Restore DLN. Ensure **RING RST LNOO a COMPLETED** Message Is Received	TELCO	DLP-570
30	Enter **1107** in Command Mode To Obtain Display Page 1107	TELCO	—
31	Ensure **HWDR STATE** for DLN Being Converted Is **ACT**	TELCO	—
32	Enter Message **OP:RING;DETD!** Ensure No **"i"** is Listed for Any Link Node (i = isolated). If Segment Is Isolated, Enter Message **CFR:RING!** Ensure **NORMAL CONFIGURATION, NO NODES ISOLATED** Message Is Received	TELCO/INST	—
33	Enter Message **AUD:DLN 1,INS "LNOO-a"!** (a - Member Number of DLN Being Converted) To Run DLN 1 Audit. Ensure Number of Errors Found and Number of Errors Corrected Are Same	TELCO/INST	—
34	Enter Message **AUD:DLN 2,INS "LNOO-a"!** (a - Member Number of DLN Being Converted) To Run DLN 2 Audit. Ensure Number of Errors Found and Number of Errors Corrected Are Same	TELCO/INST	—
35	Enter Message **AUD:DLN 3,INS "LNOO-a"!** (a - Member Number of DLN Being Converted) To Run DLN 3 Audit. Ensure Number of Errors Found and Number of Errors Corrected Are Same	TELCO/INST	—
36	Soak DLN Being Converted As Standby DLN for 1 Hour	TELCO	—
37	Enter **1107** in Command Mode To Obtain Display Page 1107 and Ensure Converted DLN is in STBY mode	TELCO	—

DO THE ITEMS BELOW IN THE ORDER LISTED . . . . . FOR DETAILS, GO TO			
	NOTE: Items 38 through 44 are done to test the DLN just converted in the 1WAY IN and 1WAY OUT mode. The actual configuration of the other nodes (ACT/STBY - SCANIN/SCANOUT) will vary and needs to be determined before the actual switch of the node (two nodes will be in STBY)		
38	Using 1107 Page, Determine and Record Which DLN Has the Following Configuration: HDWR STATE = ACT APPL STATE = ACT MODE = 1WAY IN STREAM = SCANIN	TELCO	—
39	Enter Message **SW:DLN,LNaa b,LN00 c!** To Make DLN Converted Active aa = Group Number of DLN Determined in Item 38 b = Member Number of DLN Determined in Item 38 c = Member Number of DLN Being Converted	TELCO	—
40	Soak DLN Converted in ACT 1WAY IN State for 1 Hour	TELCO/INST	—
41	Enter Message **SW:DLN,LNaa b,LN00 c!** To Make DLN Converted Standby aa = Group Number of DLN Determined in Item 38 b = Member Number of DLN Determined in Item 38 c = Member Number of DLN Being Converted	TELCO	—
42	Using 1107 Page, Determine and Record Which DLN Has the Following Configuration: HDWR STATE = ACT APPL STATE = ACT MODE = 1WAY OUT STREAM = SCANOUT	TELCO	—
43	Enter Message **SW:DLN,LNaa b,LN00 c!** To Make DLN Converted Active aa = Group Number of DLN Determined in Item 42 b = Member Number of DLN Determined in Item 42 c = Member Number of DLN Being Converted	TELCO	—
44	Soak DLN Converted in ACT 1WAY OUT State for 1 Hour	TELCO/INST	—
45	At 3B MCRT, Enter Following Messages To Allow Automatic Diagnostics: • ALW:DMQ;SRC REX! • ALW:DMQ;SRC ADP!	TELCO	—
	(Continued on Page 5)		

DO THE ITEMS BELOW IN THE ORDER LISTED . . . . . FOR DETAILS, GO TO			
46	Copy Incore ECD to Disk	TELCO	DLP-519
	NOTE: Soak new DLN until next night's shift to ensure no problem exists with system operation after growing		
47	Safe Point To Temporarily Stop This Procedure. If for Any Reason Backout Is Necessary, hv and mv Values, and Packcode Must Be Changed to Their Old Values. Old Circuit Packs Must Replace IRNB Circuit Pack Removed. This Procedure Can Be Used (Starting at Item 5 for Backout). Contact Appropriate Support Organization for Technical Assistance	TELCO/INST	—
48	Verify System Status	TELCO/INST	DLP-542
49	Run File System Audits To Ensure No File System Errors	TELCO	DLP-520
50	Repeat Items 5 Through 49 for Next DLN on RNC 00 (There Are Two DLNs)	TELCO/INST	—
51	At 3B MCRT, Enter Following Messages To Inhibit Automatic Diagnostics: • INH:DMQ;SRC REX! • INH:DMQ;SRC ADP!	TELCO	—
	NOTES: 1. Node processor (Position 058) circuit packs will be replaced by IRN2 circuit pack 2. DLN(s) will be converted in RNC 32 next		
52	Depress **CMD MSG (PF3)** Key and Enter **1107** in Command Mode To Obtain Display Page 1107	TELCO	—
53	If **APPL STATE** for DLN Being Converted Is **ACT** on 1107 Page, Enter Message **SW:DLN,LN32 a,LNbb c!** a = DLN Number Being Converted bb/c = Group Number/Member Number of a STBY DLN	TELCO	—
54	Enter Message **OP:RING;DETD** and Ensure No **"i"** Is Listed for Any Link Node (i = Isolated). Only One Area on CNI Ring Can Be Isolated at a Time. If Any Link Node Is Isolated, That Link Node Will Have To Be Restored Before Continuing	TELCO	—
55	Enter Message **RMV:LN32 a!** (a = Member Number of DLN Being Converted in Standby Mode) To Remove DLN. Ensure **RING RMV LN32 a COMPLETED** Message Is Received	TELCO	—
56	Enter Message **DGN:LN32 a;RAW!** (a = Member Number of DLN Being Converted). Ensure **DGN LN32 a ATP MSG COMPLETE** Message Is Received	TELCO	—
57	Ensure 1107 Page Displays **HDWR STATE** as **OOS** for Removed DLN	TELCO	—

DO THE ITEMS BELOW IN THE ORDER LISTED . . . . . FOR DETAILS, GO TO			
58	Enter Message **CFR:RING,LN32 a; EXCLUDE!** (a = Member Number of DLN Being Converted) To Isolate DLN. Ensure **RING CFR LN32 a COMPL** Message Is Received	TELCO	DLP-539
59	Enter **1106** in Command Mode To Obtain Display Page 1106	TELCO	—
60	Enter **400** in Command Mode To Obtain BISO-EISO Screen	TELCO	—
61	Ensure DLN Being Converted Is Isolated	TELCO	—
	NOTE: DLN requires both LN and RPCD ucb entries and must be changed in that order		
62	Recent Change DLN Being Converted and Associated RPCD to UNEQUIP	TELCO	DLP-565
63	At 3B MCRT, Enter **1107** in Command Mode To Obtain Display Page 1107	TELCO	—
64	Ensure **HDWR STATE** for DLN Being Converted Is **UNEQUIP**	TELCO	—
65	At DLN Being Converted, Remove and Replace Circuit Packs, as Required, To Convert DLN	TELCO	—
	NOTE: RPCD data must be recent changed before DLN data. While recent changing RPCD and DLN, hv and mv values and packcode should be recorded in case backout is required		
66	Recent Change hv and mv Values, and Packcode for RPCD and DLN Being Converted. Change Major Status to **GROW.** (If Backout Is Required, Use DLP-568)	TELCO	DLP-566
67	On 1107 Page, Ensure **HDWR STATE** for DLN Being Converted Is **GROW**	TELCO	—
68	Enter Message **DGN:LN32 a;RAW!** (a = Member Number of DLN Being Converted); No Diagnostic Failures Allowed on Phases Run. Wait for **DGN LN32 a ATP MSG COMPLETE** Message	TELCO	—
69	Enter Message **SW:CU!** To Switch CUs	TELCO	—
70	Enter Message **DGN:LN32 a;RAW!** (a = Member Number of DLN Being Converted); No Diagnostic Failures Allowed on Phases Run. Wait for **DGN LN32 a ATP MSG COMPLETE** Message	TELCO	—
	NOTE: RPCD does not require being recent changed OOS		
71	Recent Change DLN Being Converted to **OOS**	TELCO	DLP-567
72	At 3B MCRT, Enter **1107** in Command Mode To Obtain Display Page 1107	TELCO	—
73	Ensure **HDWR STATE** for DLN Being Converted Is **OOS**	TELCO	—
74	Redip Equipment Configuration Data Base (ECD) and Pump Converted DLN	TELCO	DLP-569
	(Continued on Page 6)		

DO THE ITEMS BELOW IN THE ORDER LISTED . . . . . FOR DETAILS, GO TO			
75	Enter Message **RST:LN32 a; UCL!** (a = Member Number of DLN Being Converted) To Restore DLN. Ensure **RING RST LN32 a COMPLETED** Message Is Received	TELCO	DLP-570
76	Enter **1107** in Command Mode To Obtain Display Page 1107	TELCO	–
77	Ensure **HDWR STATE** for DLN Being Converted Is **ACT**	TELCO	–
78	Enter Message **OP:RING;DETD!** Ensure No **"i"** is Listed for Any Link Node (i = Isolated). If Segment Is Isolated, Enter Message **CFR:RING!** Ensure **NORMAL CONFIGURATION, NO NODES ISOLATED** Message Is Received	TELCO/INST	–
79	Enter Message **AUD:DLN 1, INS "LN32-a"!** (a = Member Number of DLN Being Converted) To Run DLN 1 Audit. Ensure Number of Errors Found and Number of Errors Corrected Are Same	TELCO/INST	–
80	Enter Message **AUD:DLN 2, INS "LN32-a"!** (a = Member Number of DLN Being Converted) To Run DLN 2 Audit. Ensure Number of Errors Found and Number of Errors Corrected Are Same	TELCO/INST	–
81	Enter Message **AUD:DLN 3, INS "LN32-a"!** (a = Member Number of DLN Being Converted) To Run DLN 3 Audit. Ensure Number of Errors Found and Number of Errors Corrected Are Same	TELCO/INST	–
82	Soak DLN Being Converted As Standby DLN for 1 Hour	TELCO	–
83	At 3B MCRT, Enter **1107** in Command Mode To Obtain Display Page 1107 and Ensure Converted DLN is in STBY mode	TELCO	–
	NOTE: Items 84 through 90 are done to test the DLN just converted in the 1WAY IN and 1WAY OUT mode. The actual configuration of the other nodes (ACT/STBY - SCANIN/SCANOUT) will vary and needs to be determined before the actual switch of the node (two nodes will be in STBY)		
84	Using 1107 Page, Determine and Record Which DLN Has the Following Configuration: HDWR STATE = ACT APPL STATE = ACT MODE = 1WAY IN STREAM = SCANIN	TELCO	–
85	Enter Message **SW:DLN,LNaa b,LN32 c!** To Make DLN Being Converted Active aa = Group Number of DLN Determined in Item 84 b = Member Number of DLN Determined in Item 84 c = Member Number of DLN Being Converted	TELCO	–
86	Soak DLN Converted in ACT 1WAY IN State for 1 Hour	TELCO/INST	–

DO THE ITEMS BELOW IN THE ORDER LISTED . . . . . FOR DETAILS, GO TO			
87	Enter Message **SW:DLN,LNaa b,LN32 c!** To Make DLN Being Converted Standby aa = Group Number of DLN Determined in Item 84 b = Member Number of DLN Determined in Item 84 c = Member Number of DLN Being Converted	TELCO	—
88	Using 1107 Page, Determine and Record which DLN Has the Following Configuration: HDWR STATE = ACT APPL STATE = ACT MODE = 1WAY OUT STREAM = SCANOUT	TELCO	—
89	Enter Message **SW:DLN,LNaa b,LN32 c!** To Make DLN Converted Active aa = Group Number of DLN Determined in Item 88 b = Member Number of DLN Determined in Item 88 c = Member Number of DLN Being Converted	TELCO	—
90	Soak DLN Converted in ACT 1WAY OUT State for 1 Hour	TELCO/INST	—
91	At 3B MCRT, Enter Following Messages To Allow Automatic Diagnostics: • **ALW:DMQ;SRC REX!** • **ALW:DMQ;SRC ADP!**	TELCO	—
92	Copy Incore ECD to Disk	TELCO	DLP-519
93	Safe Point To Temporarily Stop This Procedure. If for Any Reason Backout Is Necessary, hv and mv Values, and Packcode Must Be Changed to Their Old Values. Old Circuit Packs Must Replace IRNB Circuit Packs Removed. This Procedure Can Be used (Starting at Item 51 for Backout). Contact Appropriate Support Organization for Technical Assistance	TELCO/INST	—
94	Verify System Status	TELCO/INST	DLP-542
95	Run File System Audits To Ensure No File System Errors	TELCO	DLP-520
96	Repeat Items 51 Through 95 for Next DLN on RNC 32 (There Are Two DLNs)	TELCO/INST	—
97	Update Backup Data Base	TELCO	DLP-521
98	Write 3B Computer Backup Tapes	TELCO	DLP-522
99	Verify Backup Tapes	TELCO	DLP-525
	NOTE: Soak new DLN until next night's shift to ensure no problem exists with system operation after growing		

[1] At MCRT, depress **NORM/DISP** (**PF2**) key

[2] Enter **102** in command mode to obtain display Page 102

[3] If CU is being powered down, ensure CU being powered down is standby

AND

[4] At unit power switch, operate **ROS/RST** switch to **ROS**

At MCRT, **RMV COMPLETED** message received [NOTE 1]. At MCRT, display Page 102 indicates **OOS**, **OOS MAN**, or **UNAV** for unit being powered down. Power switch **OOS** and **ROS** LEDs lighted

[5] At unit power switch, operate **OFF** switch to OFF

At MCRT, **REPT POWER REMOVED** message received. At MCRT, display Page 102 indicates **OOS** or **UNAV** for unit being powered down. Power switch **OFF** LED lighted

NOTE 1
Any subunits will be removed from service

Issue 6	**SEP 1998**
234-153-055	**DLP**
PAGE 1 of 1	**500**

REMOVE UNIT FROM SERVICE AND POWER DOWN

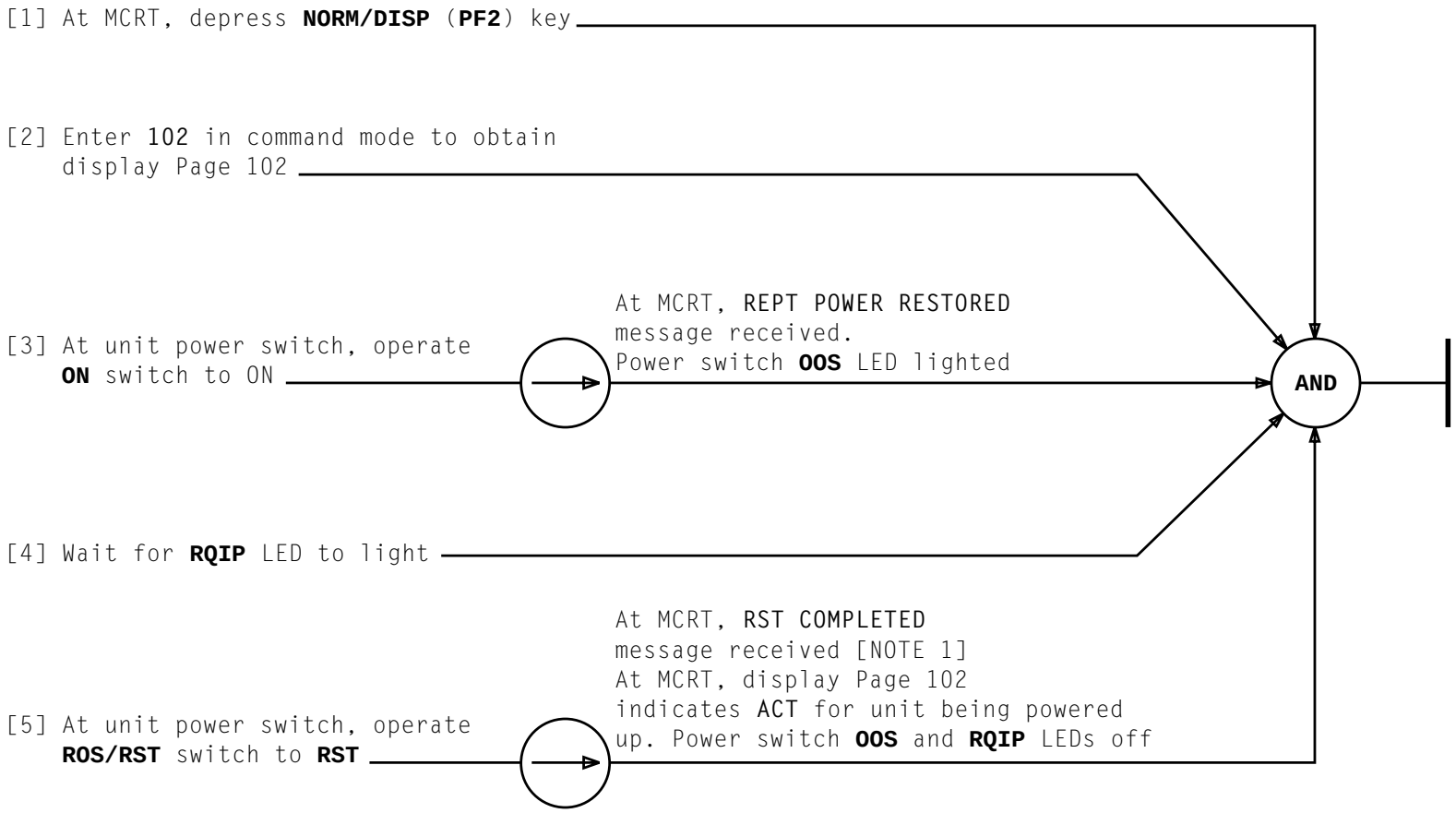

POWER UP UNIT AND RESTORE TO SERVICE

NOTE 1
Any subunits will be restored to service after RST COMPLETED message received

Issue 6	**SEP 1998**
234-153-055	**DLP**
PAGE 1 of 1	**501**

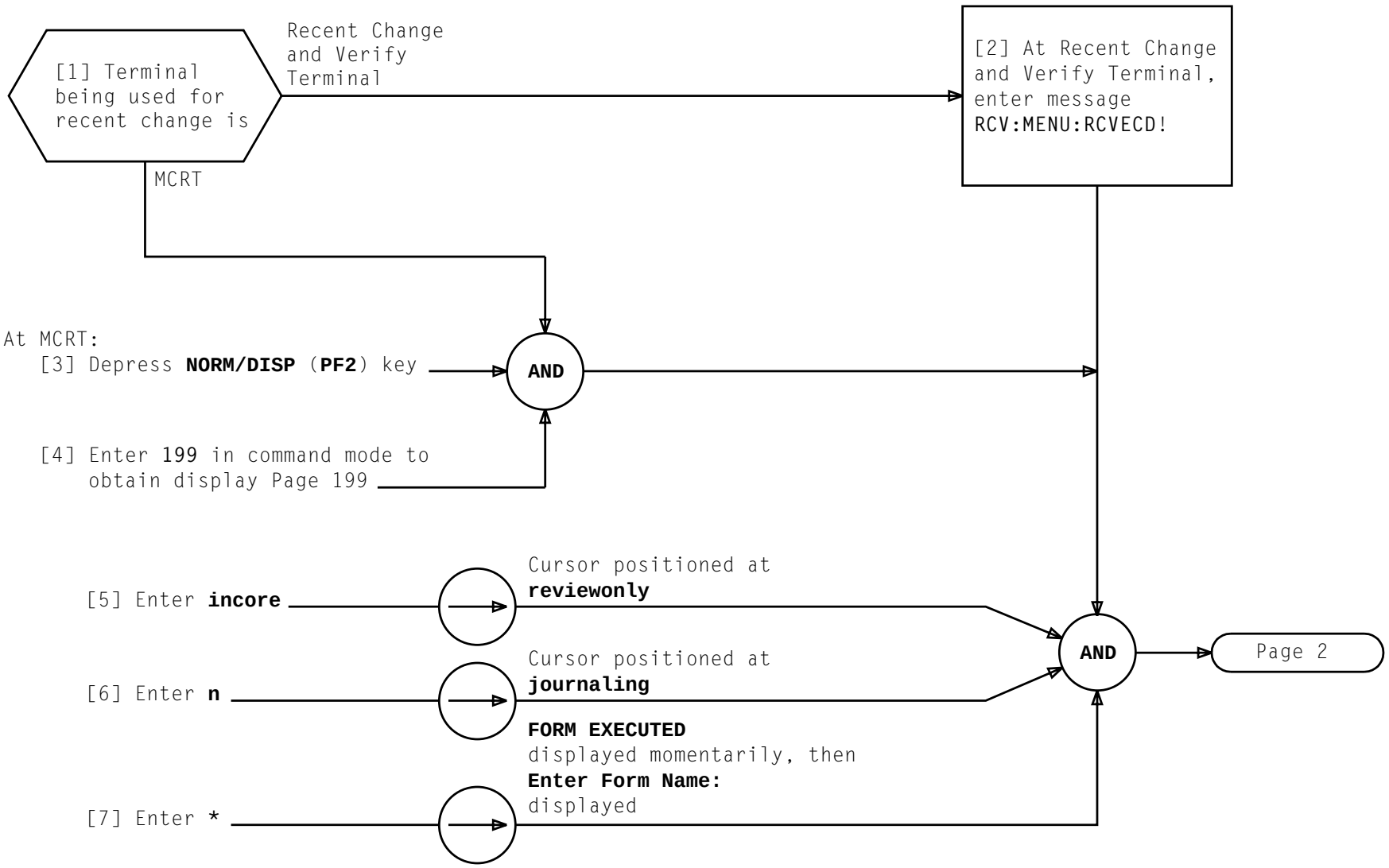

SET OR CLEAR INTERPROCESSOR MESSAGE SWITCH (IMS) MANUAL RING FLAG

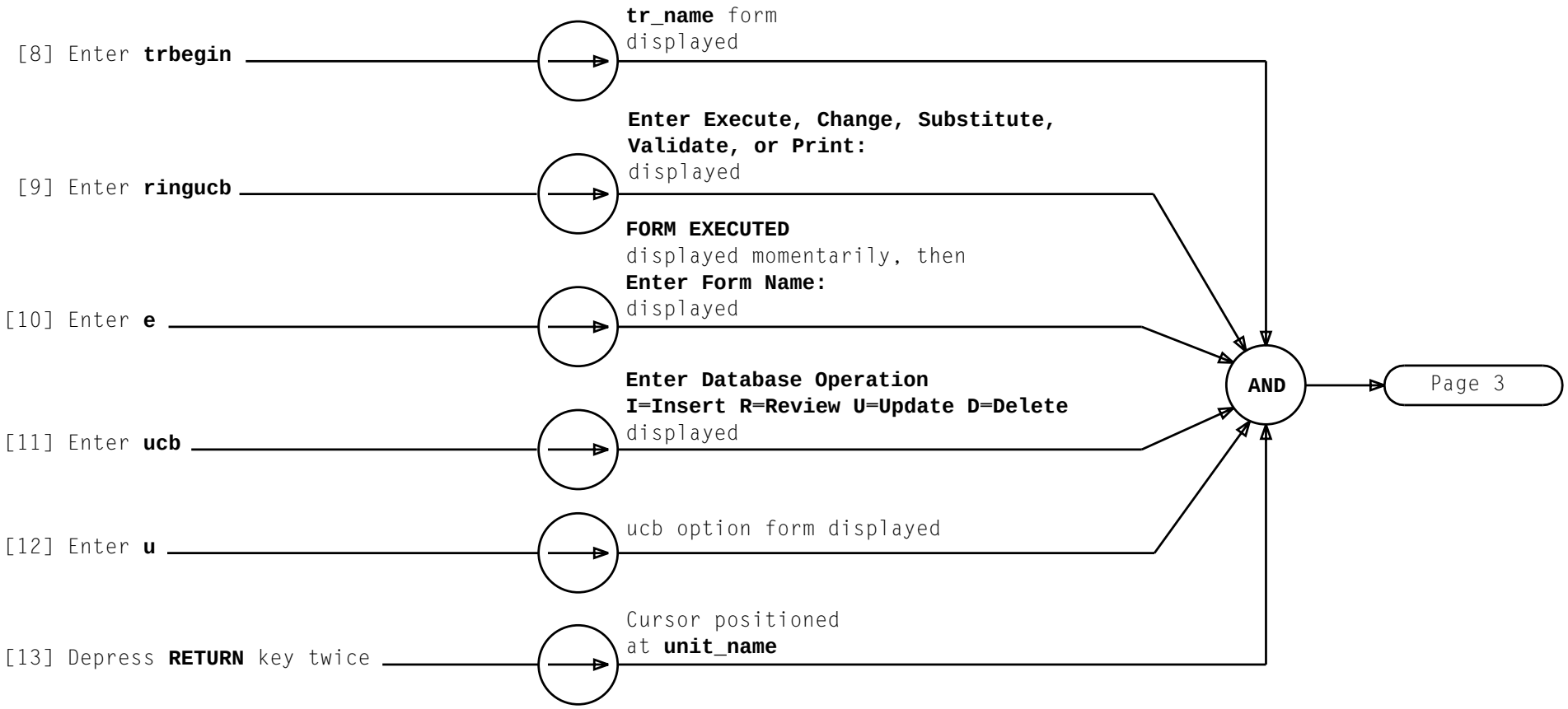

SET OR CLEAR INTERPROCESSOR MESSAGE SWITCH (IMS) MANUAL RING FLAG

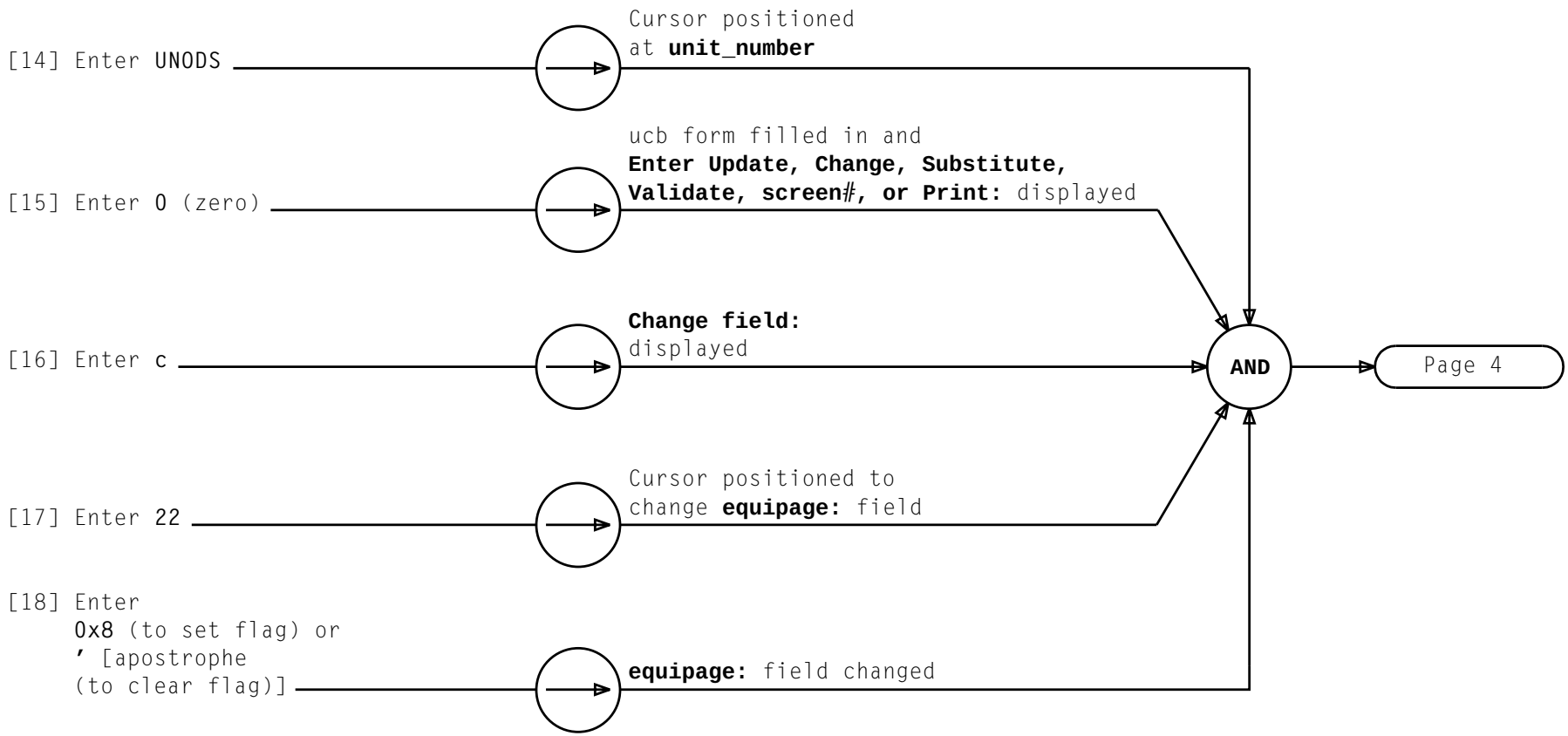

SET OR CLEAR INTERPROCESSOR MESSAGE SWITCH (IMS) MANUAL RING FLAG

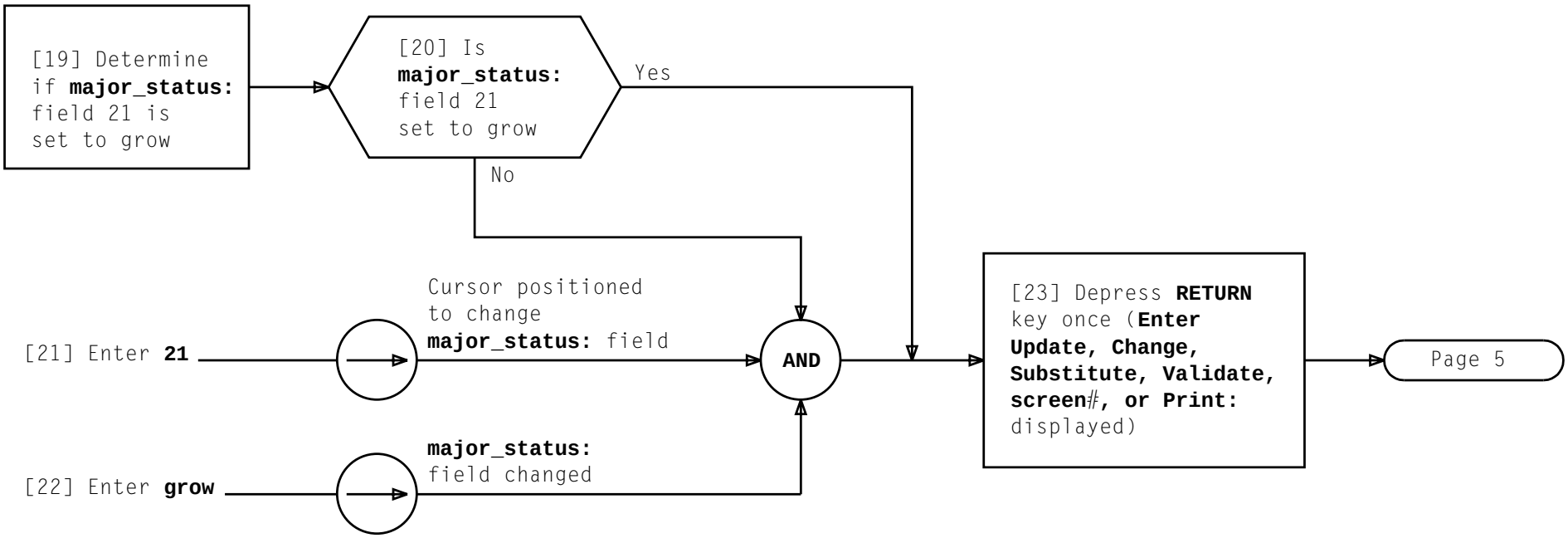

SET OR CLEAR INTERPROCESSOR MESSAGE SWITCH (IMS) MANUAL RING FLAG

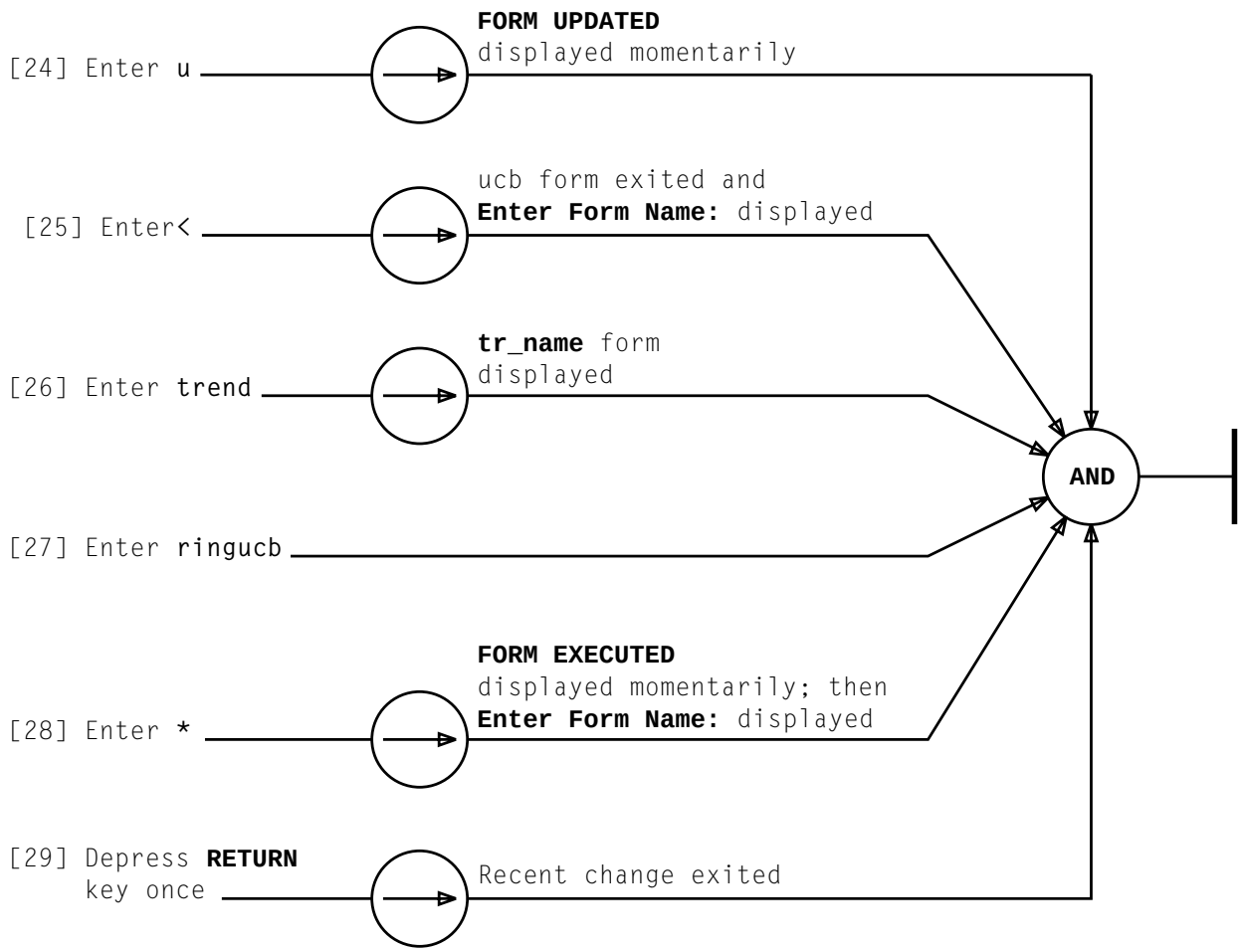

SET OR CLEAR INTERPROCESSOR MESSAGE SWITCH (IMS) MANUAL RING FLAG

[1] At MCRT, enter message
EXC:ENVIR:UPROC,FN"/etc/newring",ARGS ("cnidb")!

[2] Wait for response:
EXC ENV UPROC COMPLETED
REPT newring cnidb COMPLETED

[3] Enter message
OP:STATUS:LISTDIR,FN"/database/cni/odata"!

[4] Using printout, verify that all files in TABLE A are listed

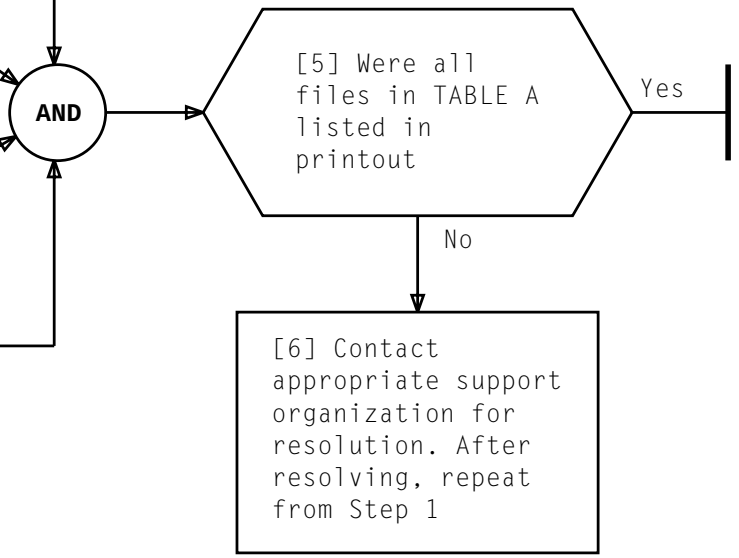

TABLE A	
c_office	member
cet	meminfo
clkdata	network
cluster	permrel
excp	pxl_tab
hfdt	schd
ln7slots	ssdist
locssn	uvdt
lxp_tab	vl_tab

CREATE COMMON NETWORK INTERFACE OFFICE DATA FILES

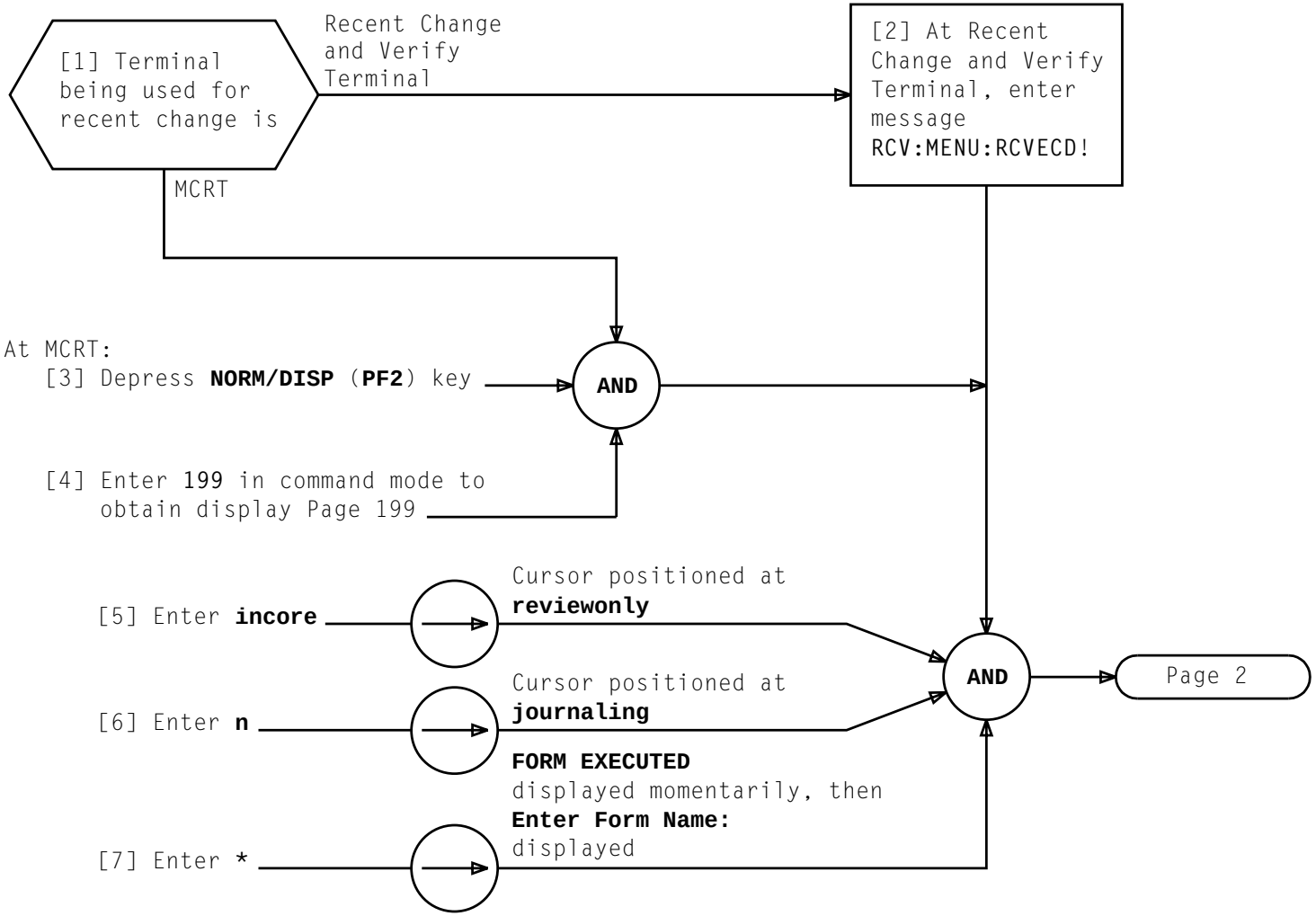

SET COMMON NETWORK INTERFACE (CNI) RING FEATURE FLAG TO ENABLED STATE

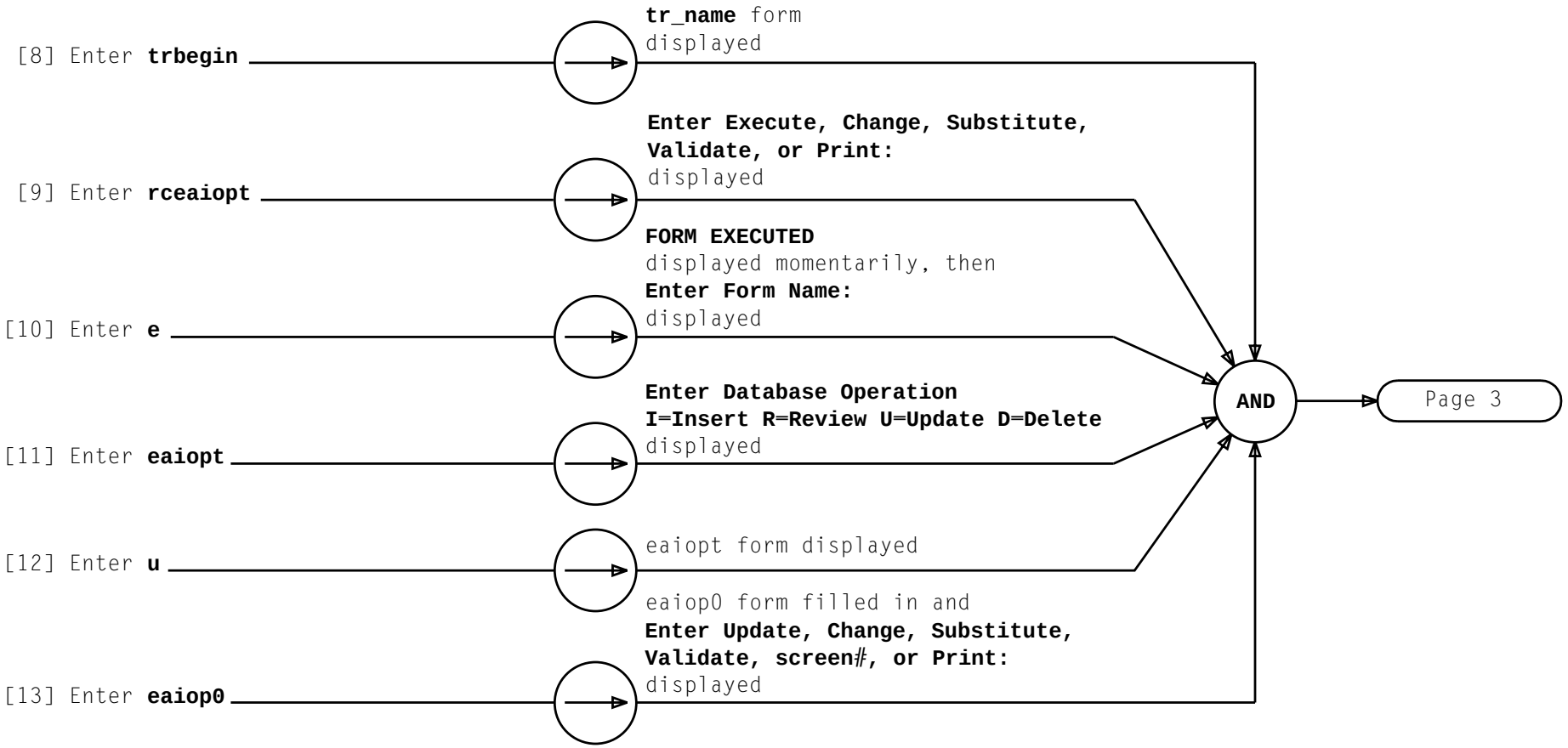

SET COMMON NETWORK INTERFACE (CNI) RING FEATURE FLAG TO ENABLED STATE

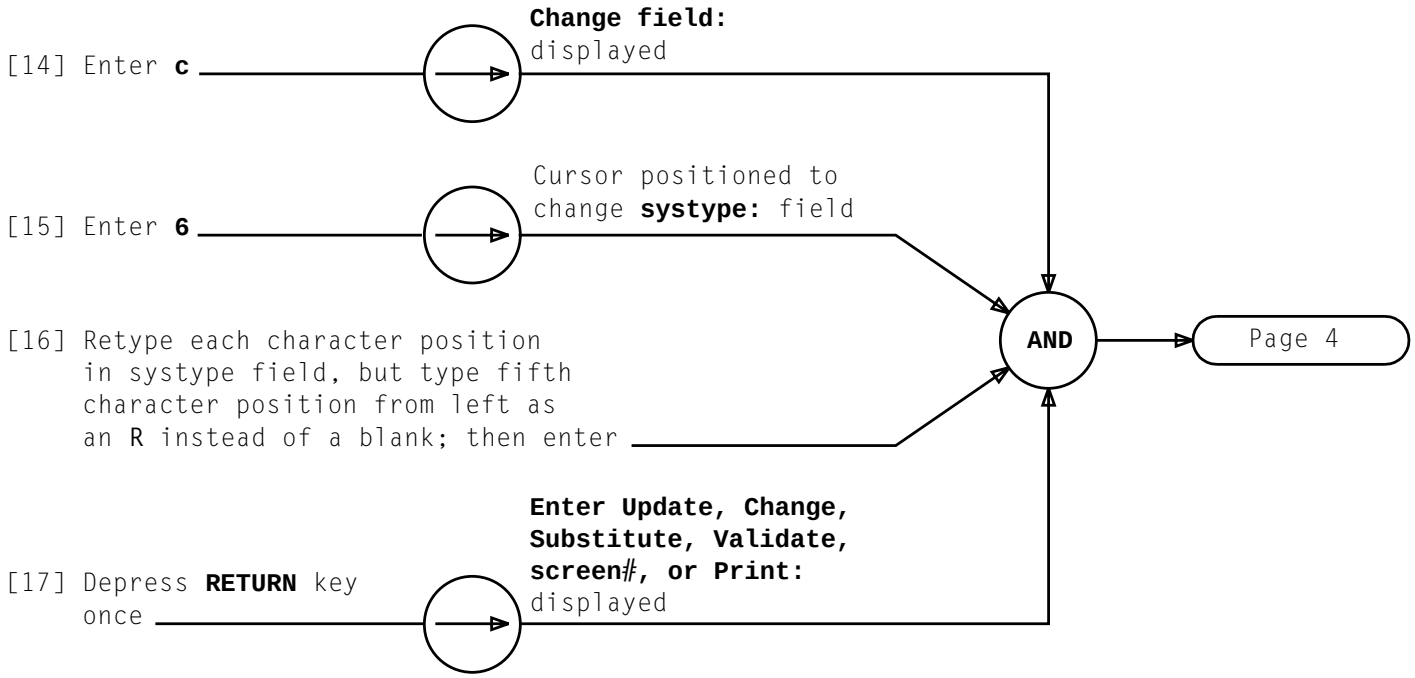

SET COMMON NETWORK INTERFACE (CNI) RING FEATURE FLAG TO ENABLED STATE

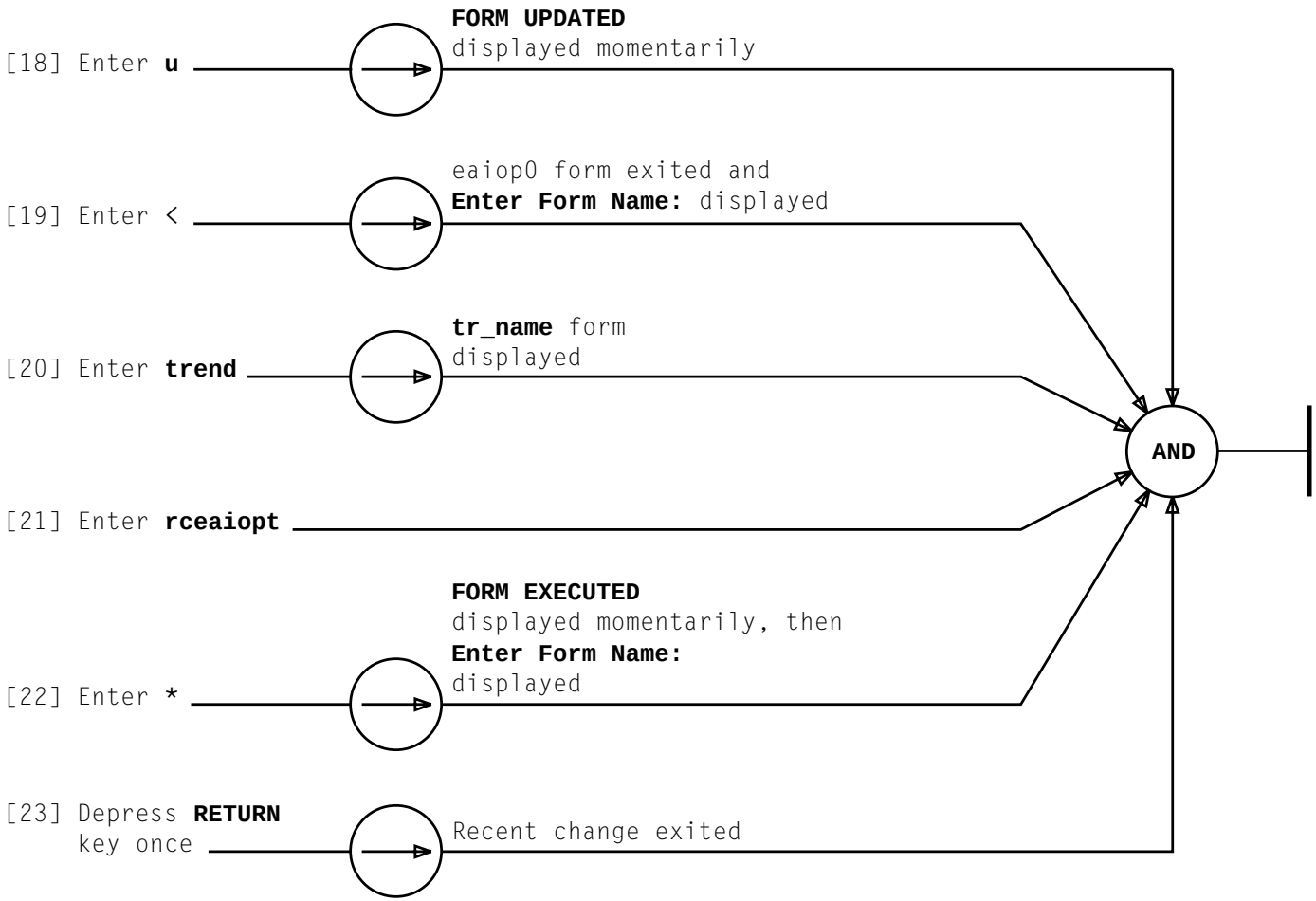

SET COMMON NETWORK INTERFACE (CNI) RING FEATURE FLAG TO ENABLED STATE

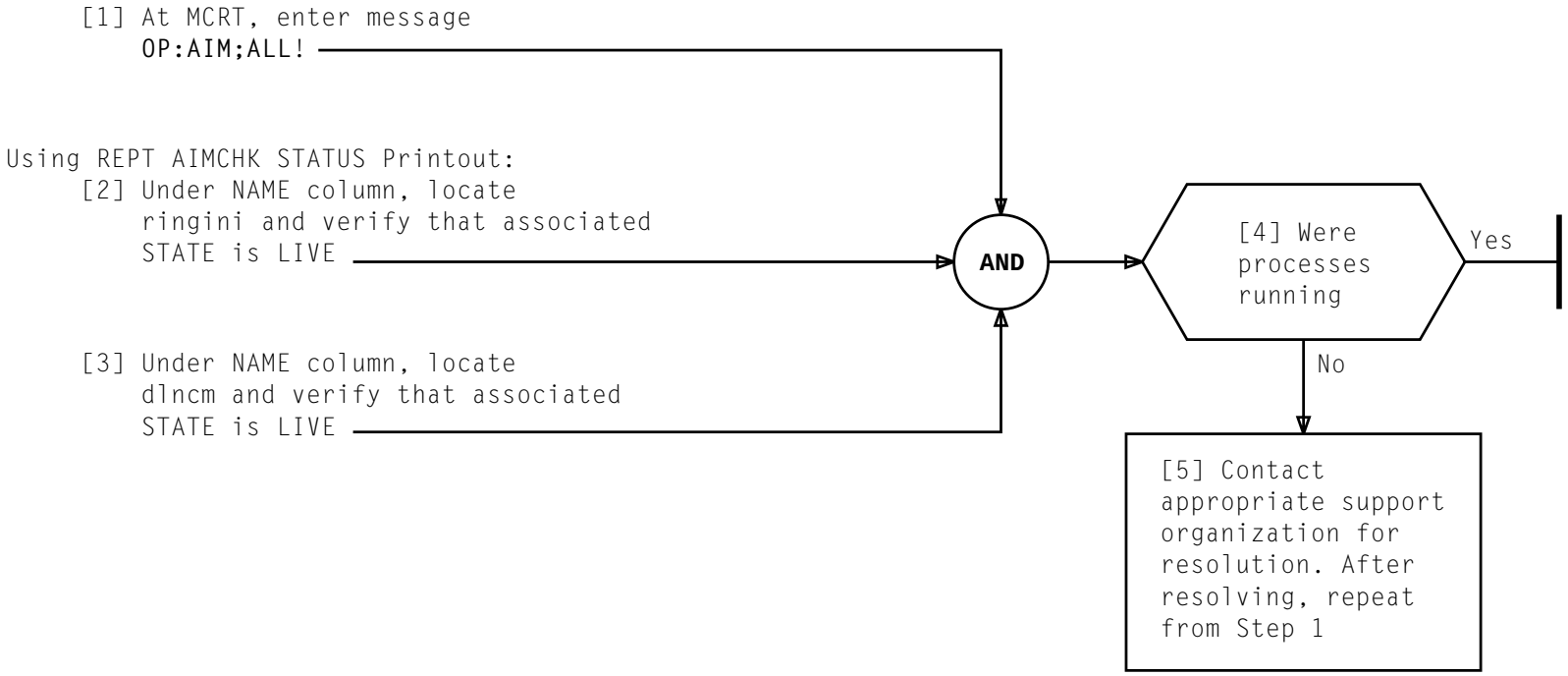

VERIFY RING PROCESSES ARE STARTED UP

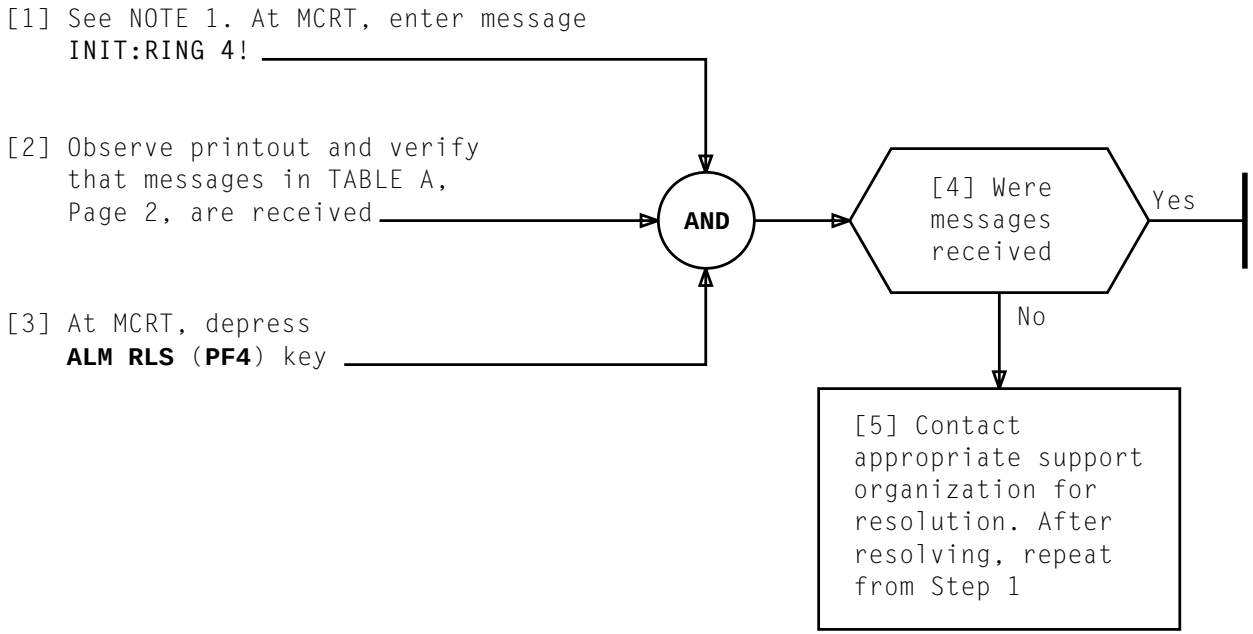

NOTE 1

Expect ring init fault message due to ring peripheral controllers being unequipped:
RING REPT RING INIT FLT
RING INITIALIZATION FAILED
NO STANDBY RPC NODES AVAILABLE

PERFORM LEVEL 4 RING INIT BOOT

TABLE A

OUTPUT MESSAGE*	OUTPUT MESSAGE*
RING REPT IMSDRV INIT STARTED ABORT SEQUENCE	RING REPT SLM DUMP MSG MISMATCHED/RETURNED MESSAGE+
RING REPT CNIINIT CNI GENERIC n.n	RING REPT LOG CDBA REMACS.C REMACS PUMP OF DLN NODE nnn STARTED+
REPT RINGINIT INIT LEVEL 4 REQUESTED	RING REPT REMACS RTN MSG+
REPT RINGINIT INIT LEVEL 4 STARTED	RING REPT LOG CDBA REMACS.C REMACS RETRY:+
REPT RINGINIT CLEANING UP OLD CNI/IMS	RING REPT REMACS RETRY EXCESSIVE RETRIES NODE nnn
REPT RINGINIT X'nnnn	RING REPT LOG CDBA REMACS.C REMACS NODE nnn RMVD.
RING REPT IMSDRV INIT STARTED BOOT INITIALIZATION PROLOGUE	RING REPT LOG CDBA REMACS.C REMACS PUMP OF NODE nnn ABORTED
RING REPT IMSDRV INIT STARTED LEVEL 4 BOOT INITIALIZATION	REPT DLNCM PROC (Dlnevent): NO ACTIVE OR STANDBY DLN
RING REPT SLMSHR CNI GENERIC RELEASE n.n.n.n	REPT DLNCM PROC (Startdln): NO ACTIVE OR STANDBY DLN
RING REPT RING INIT FLT RING INITIALIZATION FAILED NO STANDBY RPC NODES AVAILABLE	REPT DLNCM PROC (Trafstrt): UNABLE TO START STREAM
RING REPT IMSDRV INIT COMPLETED LEVEL 4 BOOT INITIALIZATION	REPT RINGINIT INIT LEVEL 4 COMPLETED IN nn SECONDS
REPT RINGINIT CNI/IMS PART DONE	

* Messages may come out in different order because of queuing
\+ Messages are received several times

PERFORM LEVEL 4 RING INIT BOOT

VERIFY RING DISPLAY PAGES

At MCRT:

[1] Depress **NORM/DISP** (**PF2**) key

[2] See NOTE 1. Enter one display page number in command mode to obtain that display page [TABLE A]

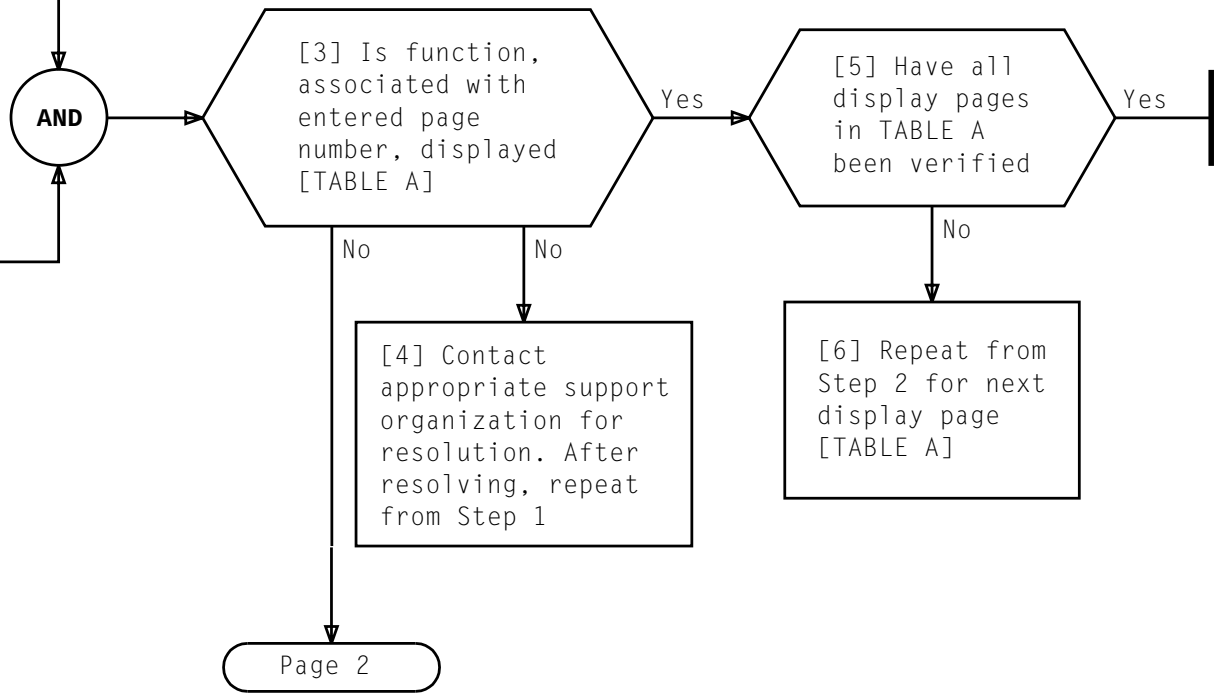

TABLE A

DISPLAY PAGE	FUNCTION
1105	Ring Status Summary
1106	Ring Group Status
1107	DLN/API Stream Status
1108	Signaling Link Summary

NOTE 1
This procedure is only being performed to ensure that CNI display pages can be accessed

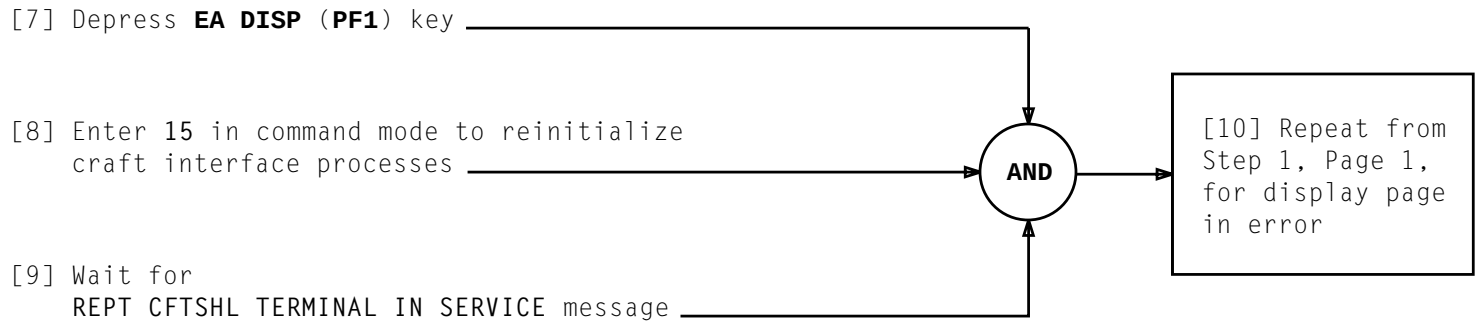

VERIFY RING DISPLAY PAGES

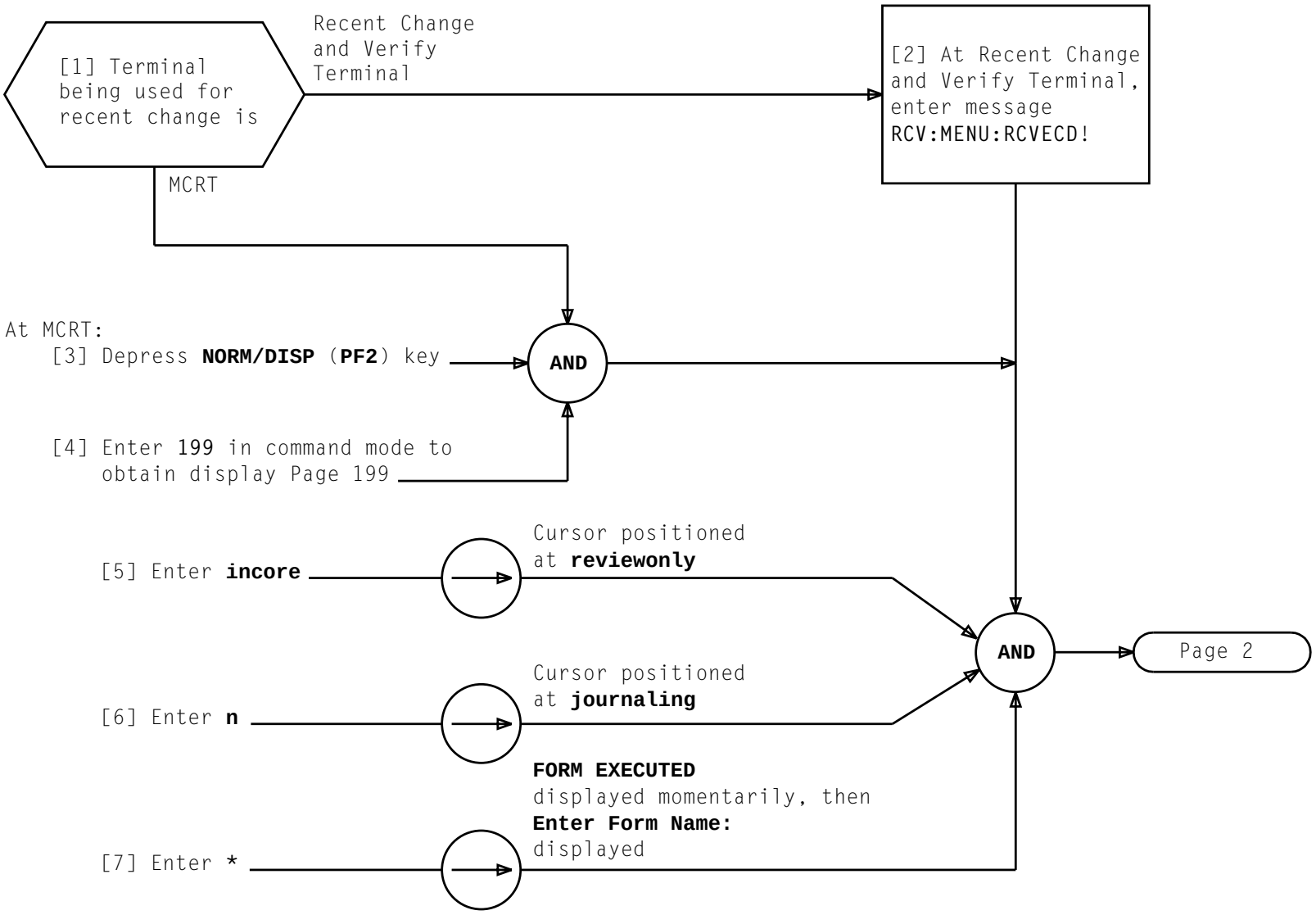

RECENT CHANGE DSCH 12 TO EQUIP RPCN AND DLN PORTS

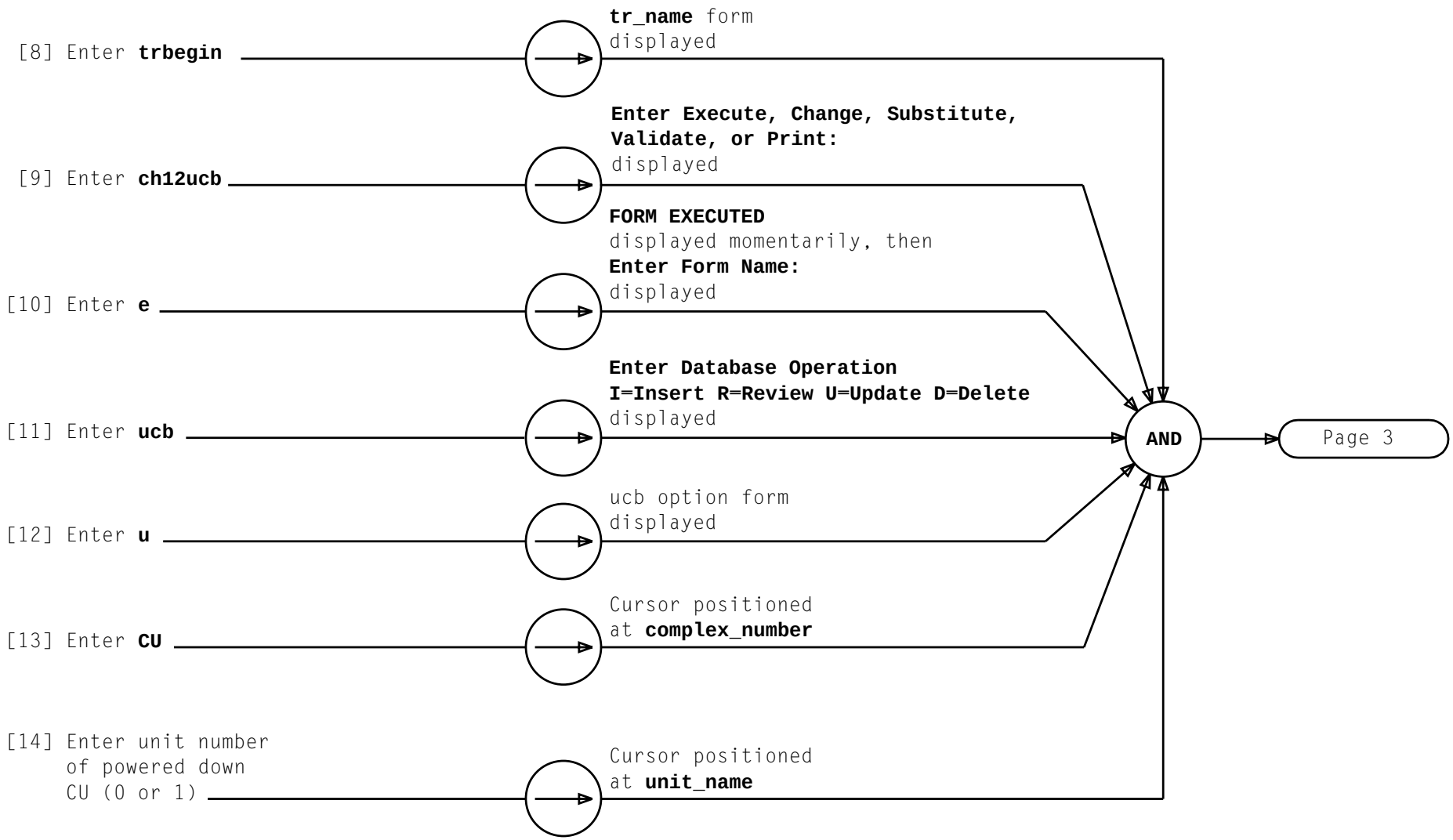

RECENT CHANGE DSCH 12 TO EQUIP RPCN AND DLN PORTS

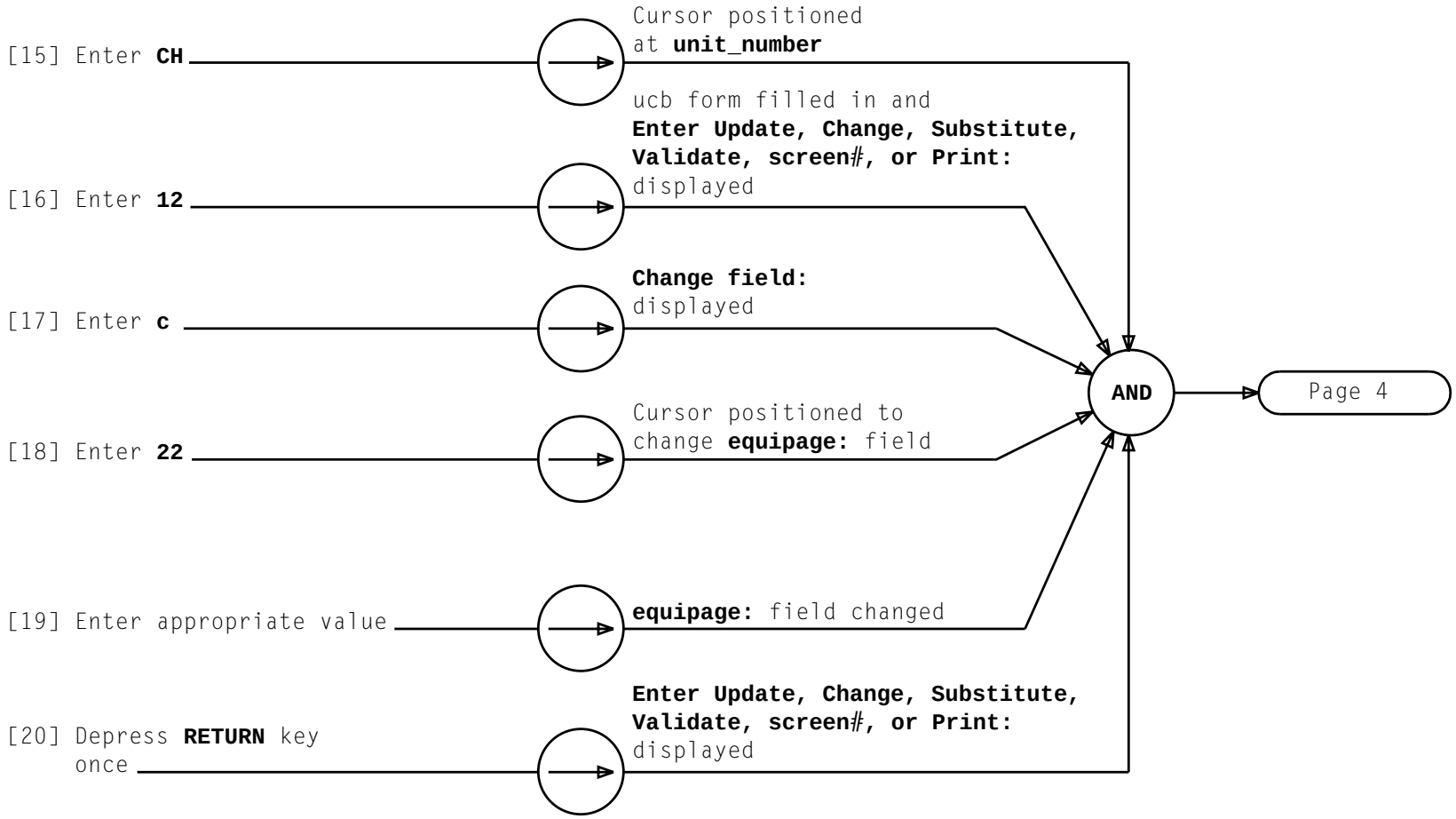

RECENT CHANGE DSCH 12 TO EQUIP RPCN AND DLN PORTS

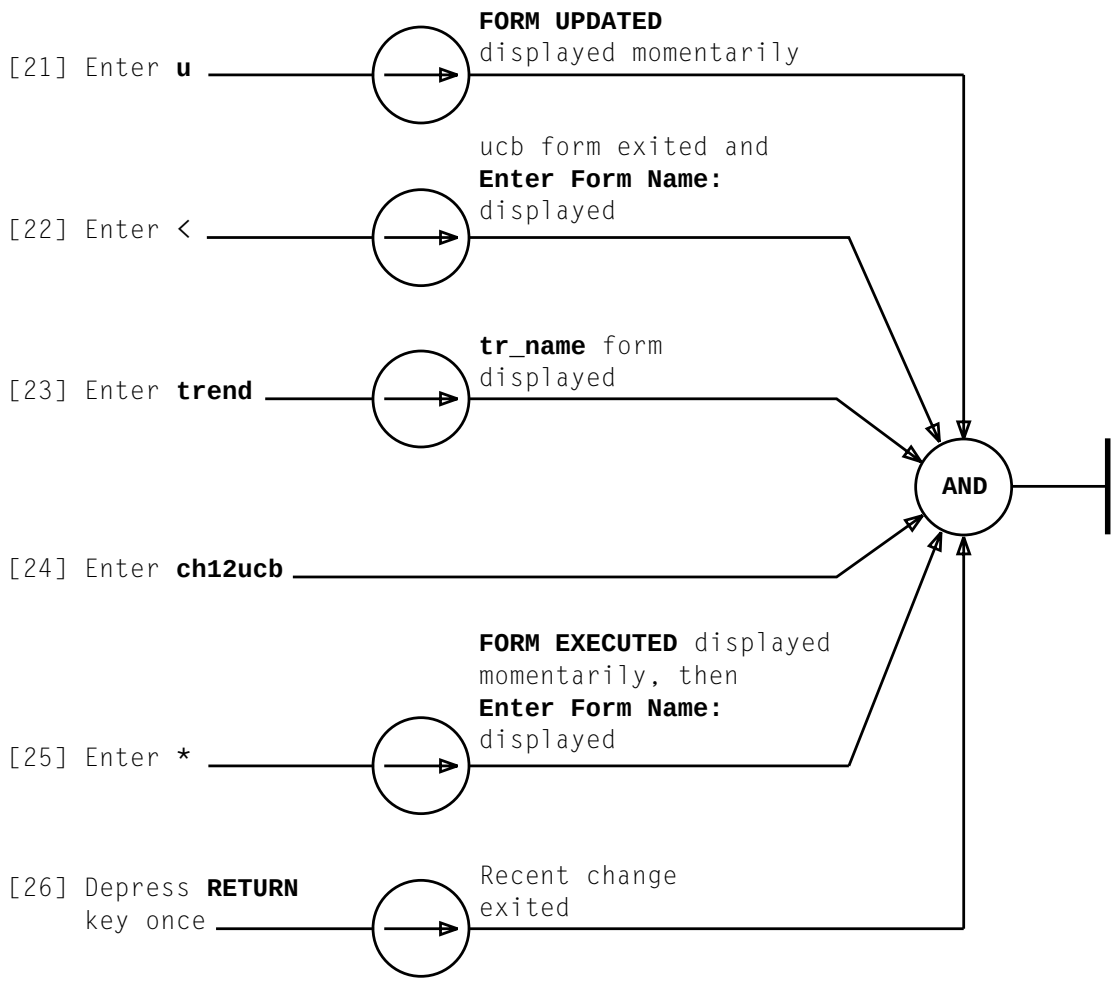

RECENT CHANGE DSCH 12 TO EQUIP RPCN AND DLN PORTS

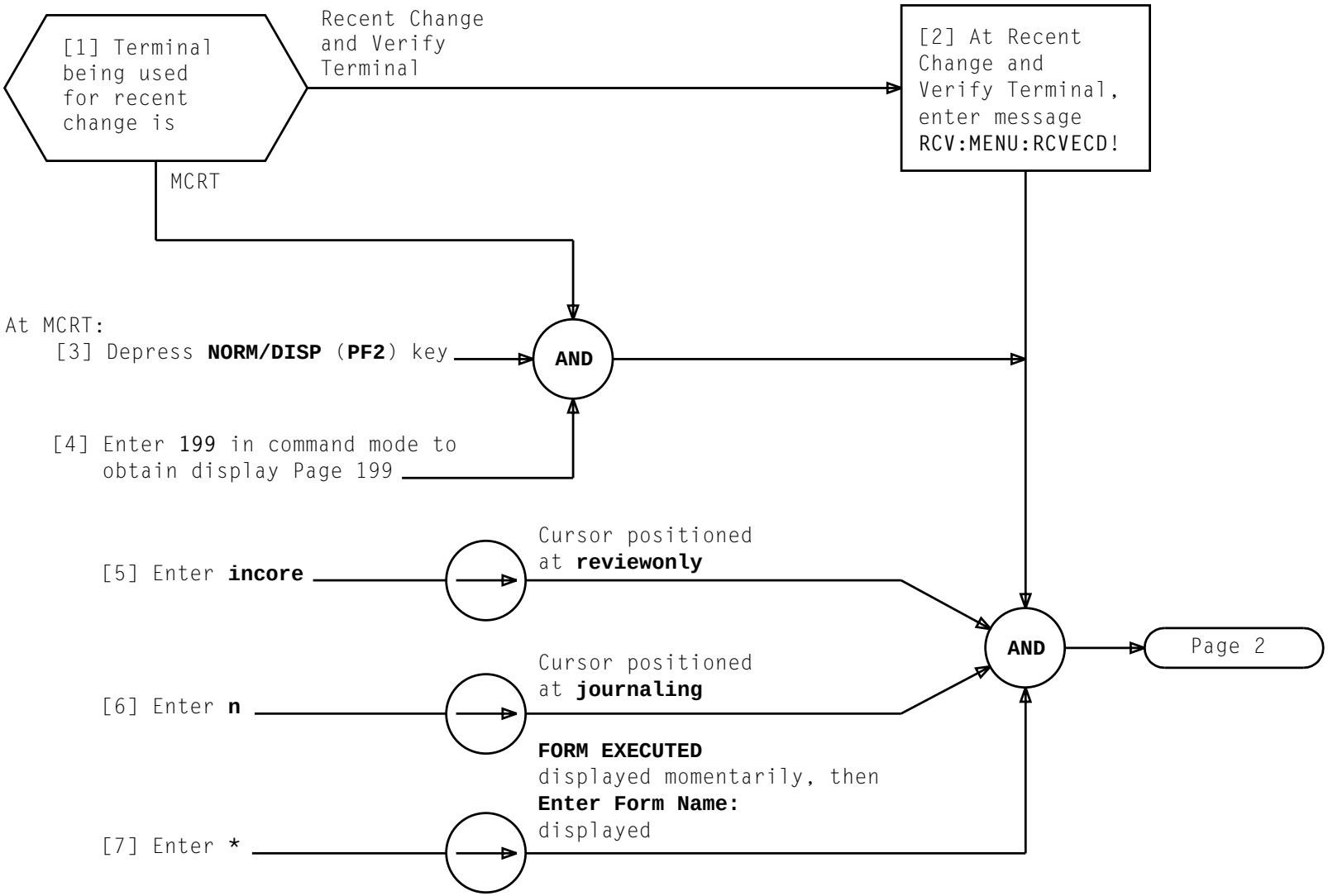

RECENT CHANGE GROWTH UNITS FROM GROW TO OOS

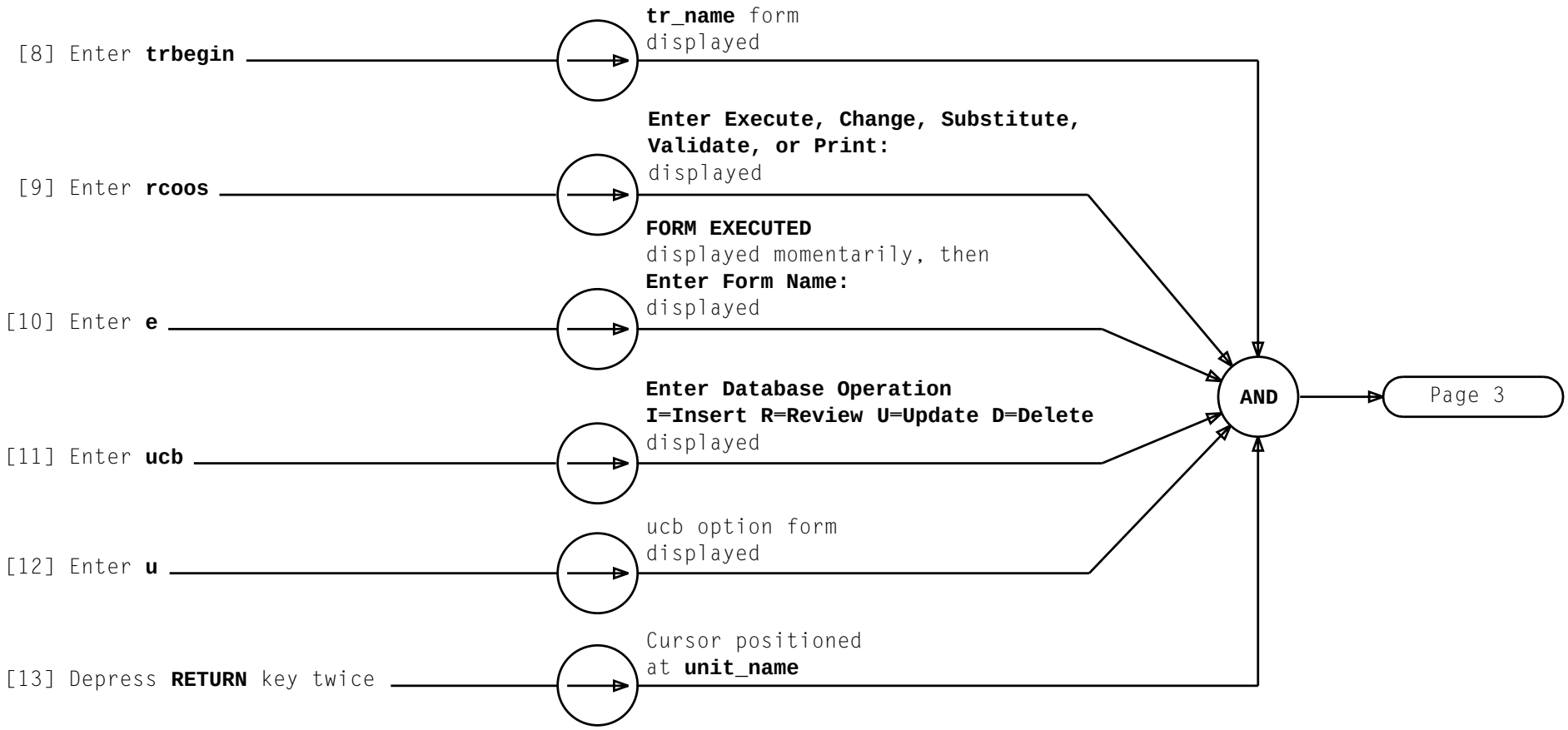

RECENT CHANGE GROWTH UNITS FROM GROW TO OOS

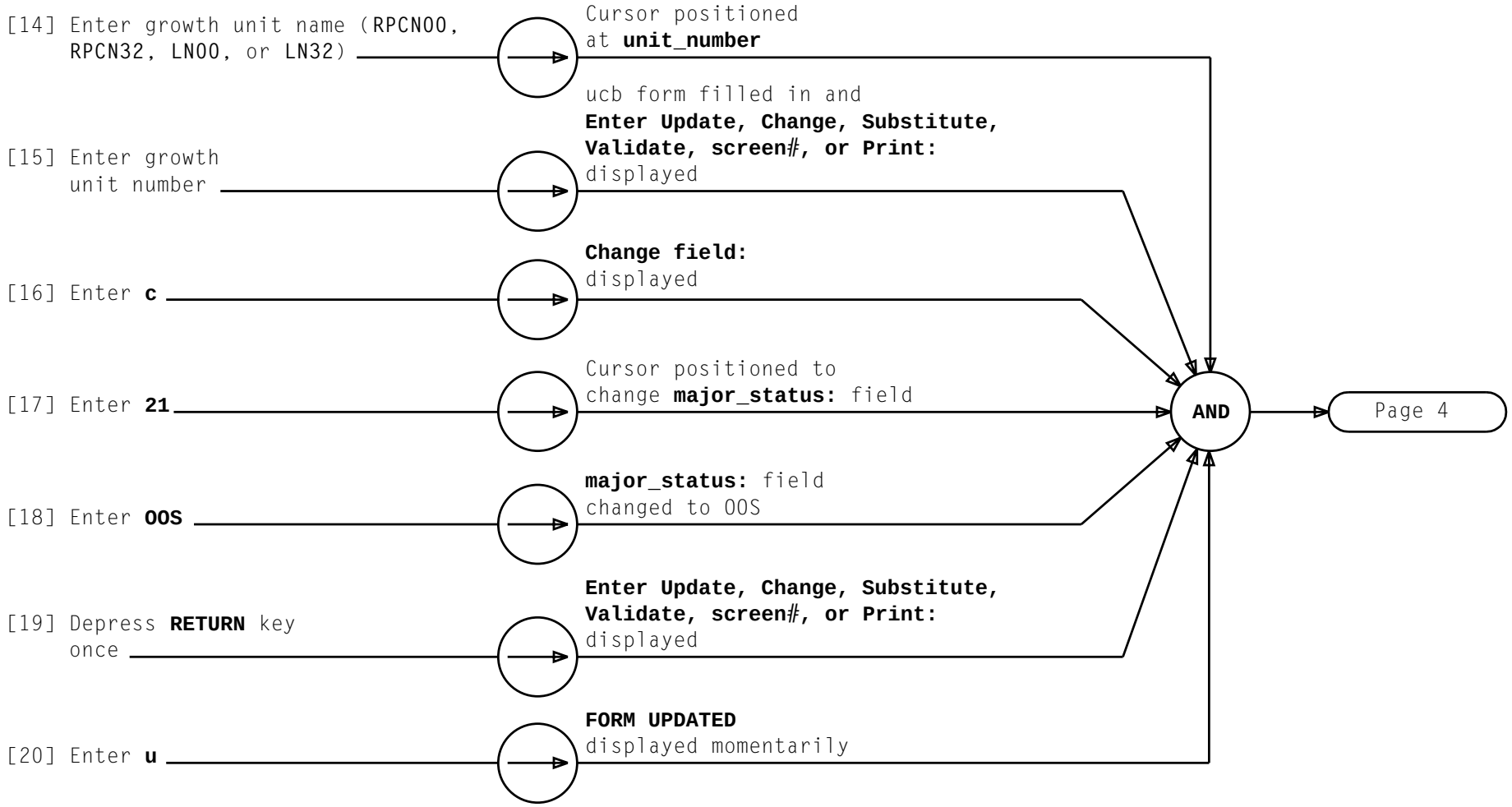

RECENT CHANGE GROWTH UNITS FROM GROW TO OOS

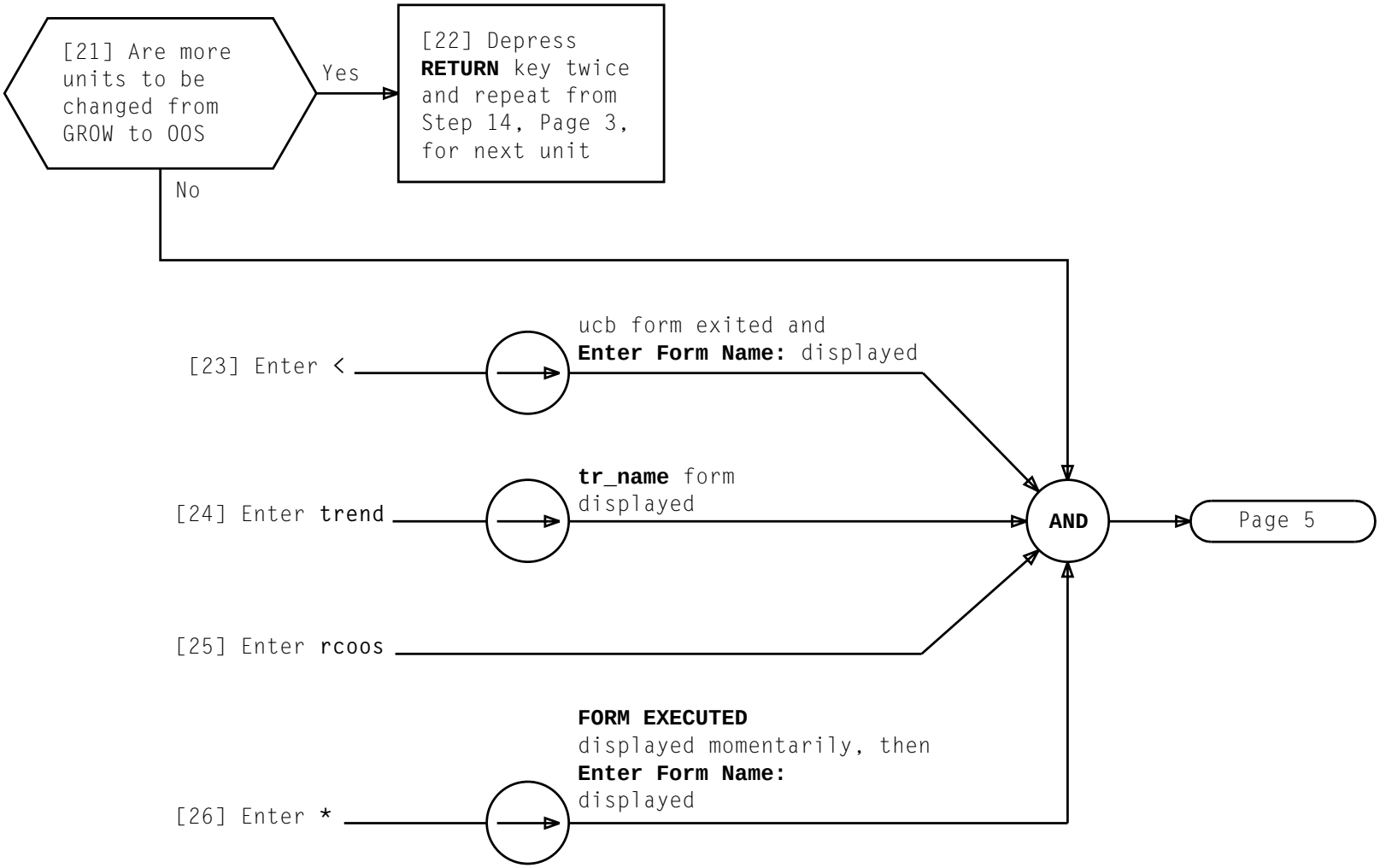

RECENT CHANGE GROWTH UNITS FROM GROW TO OOS

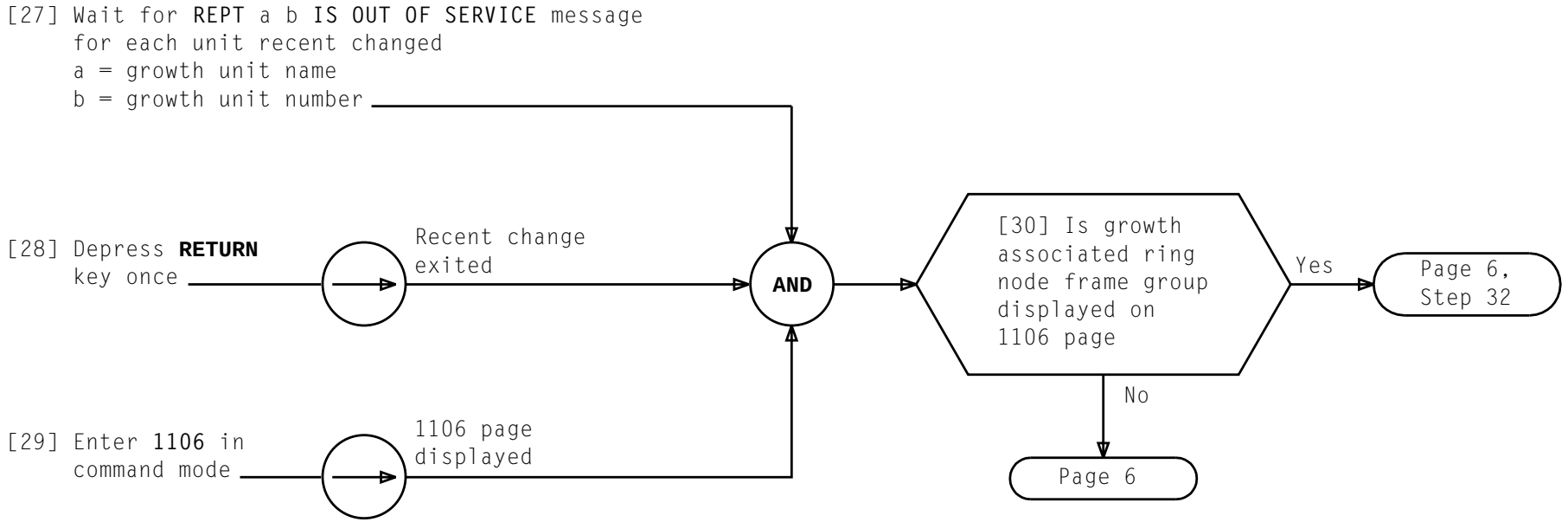

RECENT CHANGE GROWTH UNITS FROM GROW TO OOS

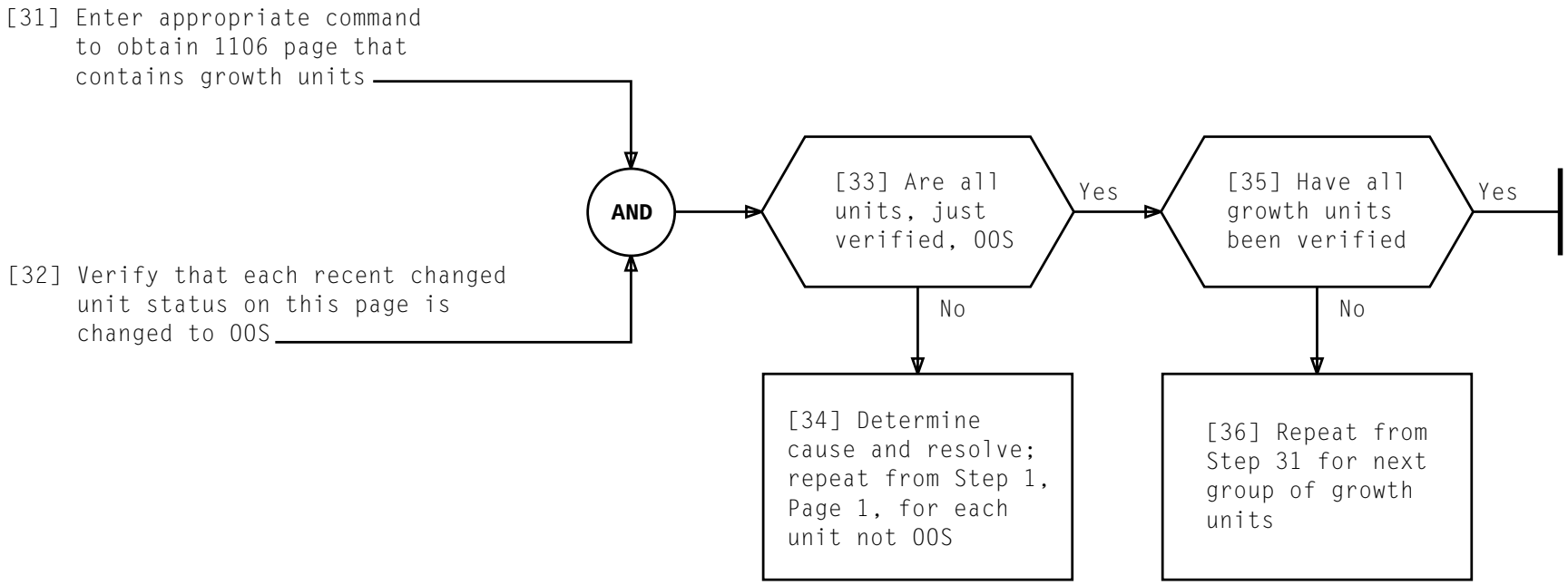

RECENT CHANGE GROWTH UNITS FROM GROW TO OOS

RESTORE RPCN00 AND RPCN32 UNCONDITIONALLY

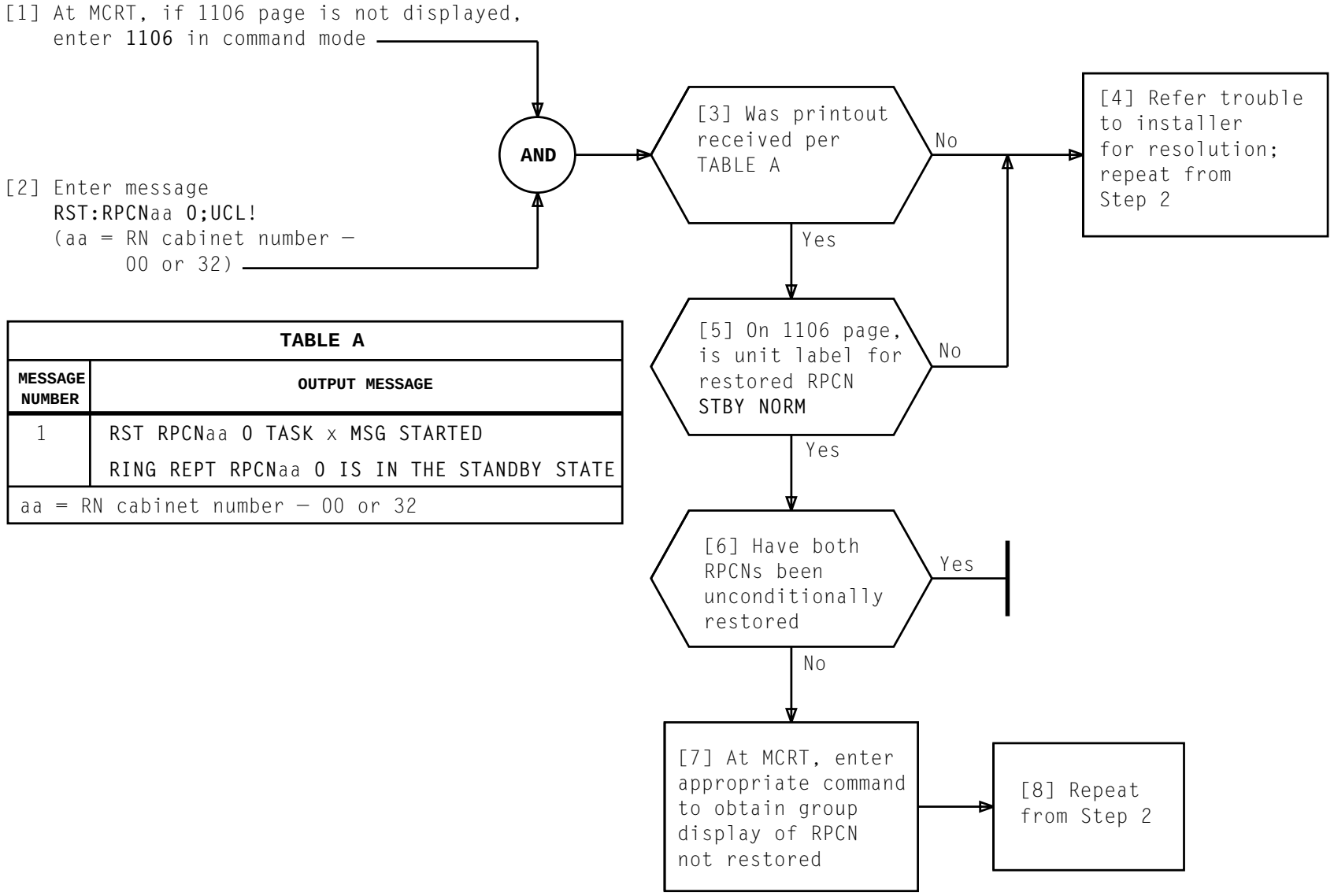

TABLE A

MESSAGE NUMBER	OUTPUT MESSAGE
1	RST RPCNaa 0 TASK x MSG STARTED RING REPT RPCNaa 0 IS IN THE STANDBY STATE

aa = RN cabinet number — 00 or 32

[1] At MCRT, enter message
CFR:RING!

[2] Observe printout and verify that messages 1 through 3 in TABLE A are received without any fault indications

AND

[3] Were messages 1 through 3 received without any fault indications

No

[4] Refer problem(s) to installer for resolution. After resolving, repeat from Step 1

Yes

[5] See NOTE 1. Observe printout and verify that message 4 in TABLE A is received

[6] Was message 4 received

Yes

Page 2

No

[7] Refer problem to installer for resolution. After resolving, repeat from Step 1

TABLE A

MESSAGE NUMBER	OUTPUT MESSAGE
1	RING REPT RING INIT RING INITIALIZATION WAS SUCCESSFUL
2	RING RST RPCN00 0 COMPLETED RING RST RPCN32 0 COMPLETED
3	RING CFR RING COMPL
4	RING REPT MANUAL RING MODE WARNING: ECD SPECIFIES MANUAL RING MODE

NOTE 1
Message 4 will be received every 30 minutes until Interprocessor Message Switch (IMS) automatic recovery is allowed

ESTABLISH RING CONFIGURATION

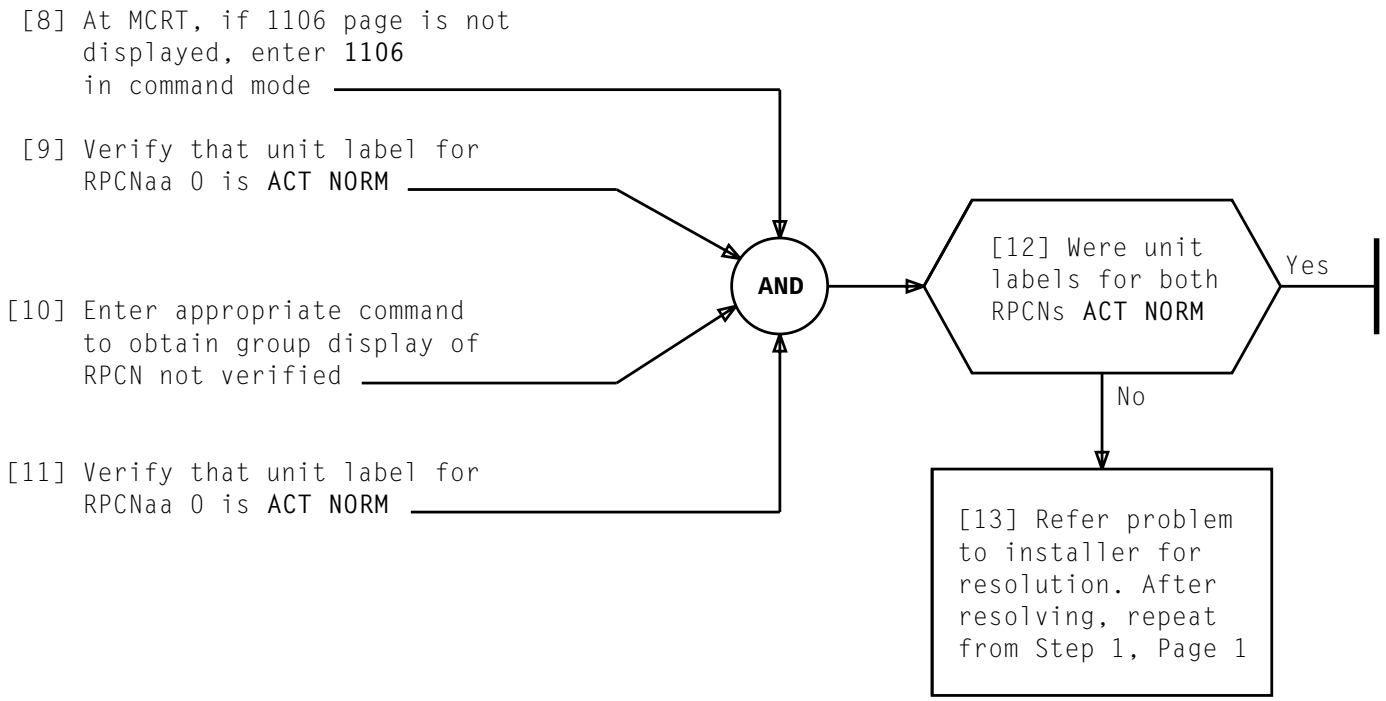

ESTABLISH RING CONFIGURATION

RESTORE EQUIPPED LINK NODES UNCONDITIONALLY

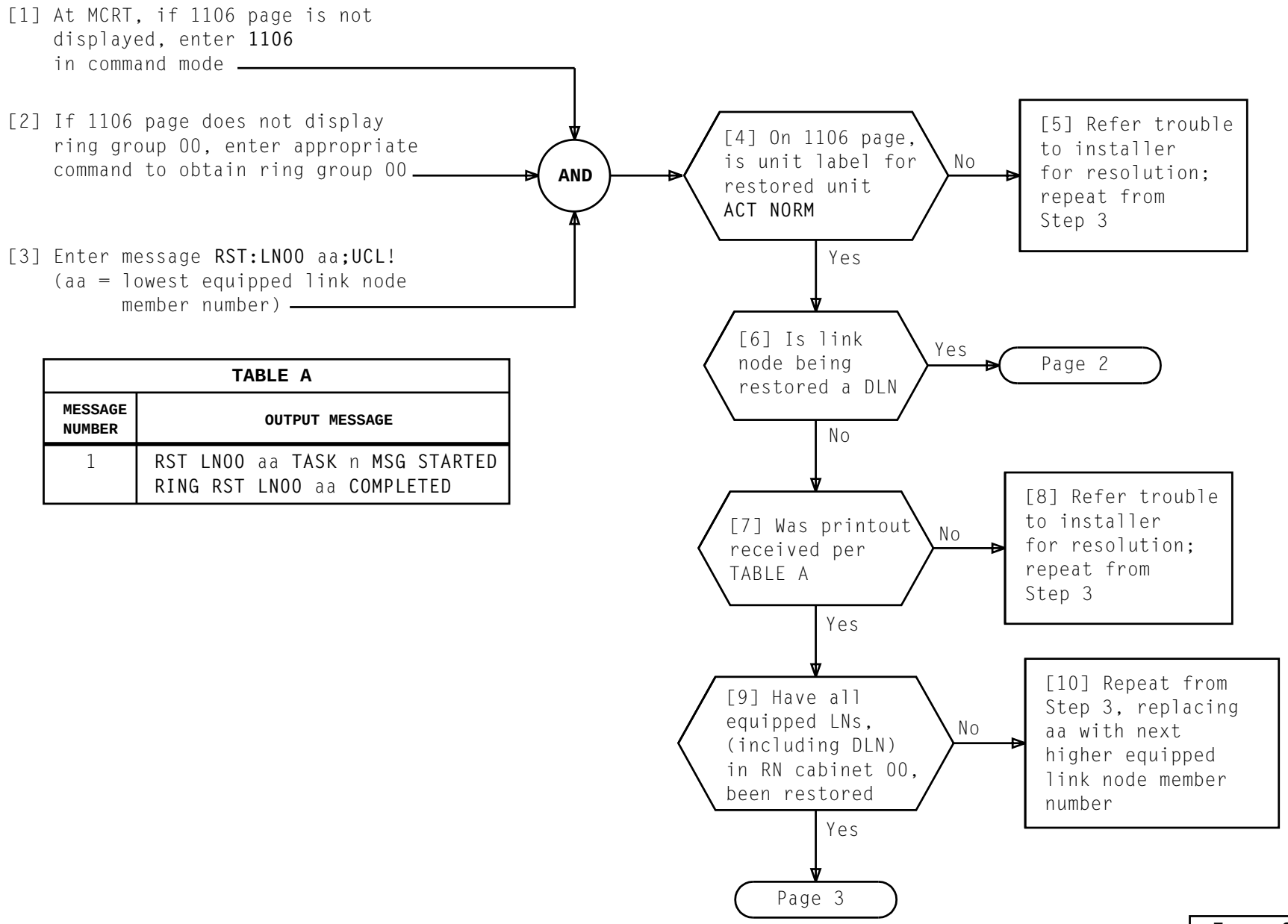

TABLE A

MESSAGE NUMBER	OUTPUT MESSAGE
1	RST LN00 aa TASK n MSG STARTED RING RST LN00 aa COMPLETED

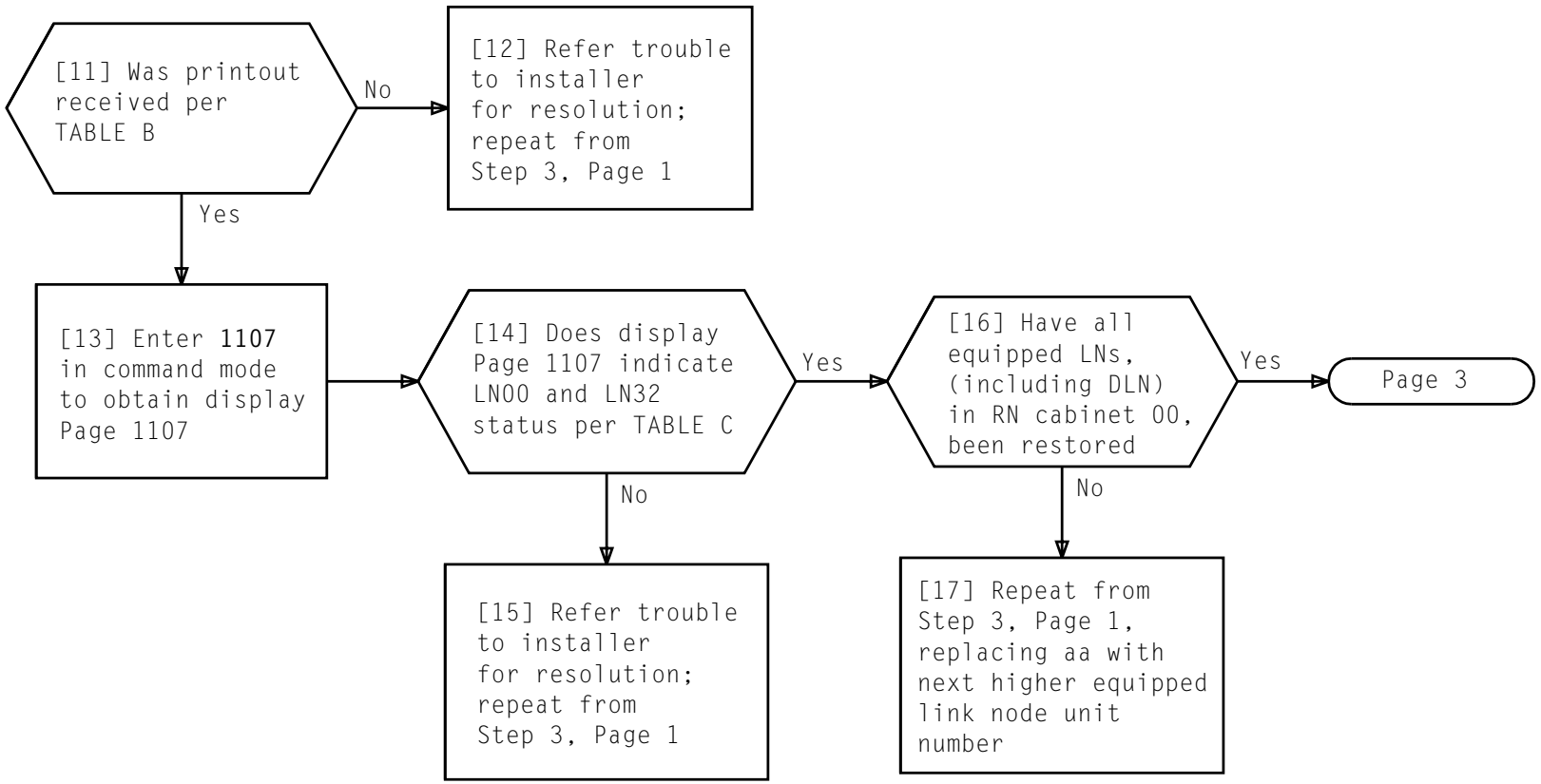

TABLE B

MESSAGE NUMBER	OUTPUT MESSAGE
1	RST LN00 aa TASK n MSG STARTED RING RST LN00 aa COMPLETED REPT DLNCM PROC (Pump): LN00 aa PUMP STARTED REPT DLNCM PROC (Pump): LN00 aa COMPLETED IN nn MSEC

TABLE C

DLN	FIELD	STATUS
LN00 (2 or 5)	HDWR STATE	ACT
	APPL STATE	ACT
	MODE	TWOWAY
	STREAM	BOTH
LN32 (2 or 5)	HDWR STATE	OOS

RESTORE EQUIPPED LINK NODES UNCONDITIONALLY

[18] At MCRT, if 1106 page is not displayed, enter **1106** in command mode

[19] If 1106 page does not display ring group 32, enter appropriate command to obtain ring group 32

[20] Enter message **RST:LN32** aa**;UCL!** (aa = lowest equipped link node member number)

AND

[21] On 1106 page, is unit label for restored unit **ACT NORM**

No → [22] Refer trouble to installer for resolution; repeat from Step 20

Yes

[23] Is link node being restored a DLN

Yes → Page 4

No

[24] Was printout received per TABLE D

No → [25] Refer trouble to installer for resolution; repeat from Step 20

Yes

[26] Have all equipped LNs, (including DLN) in RN cabinet 32, been restored

No → [27] Repeat from Step 20, replacing aa with next higher equipped link node member number

Yes

TABLE D

MESSAGE NUMBER	OUTPUT MESSAGE
1	RST LN32 aa TASK n MSG STARTED RING RST LN32 aa COMPLETED

RESTORE EQUIPPED LINK NODES UNCONDITIONALLY

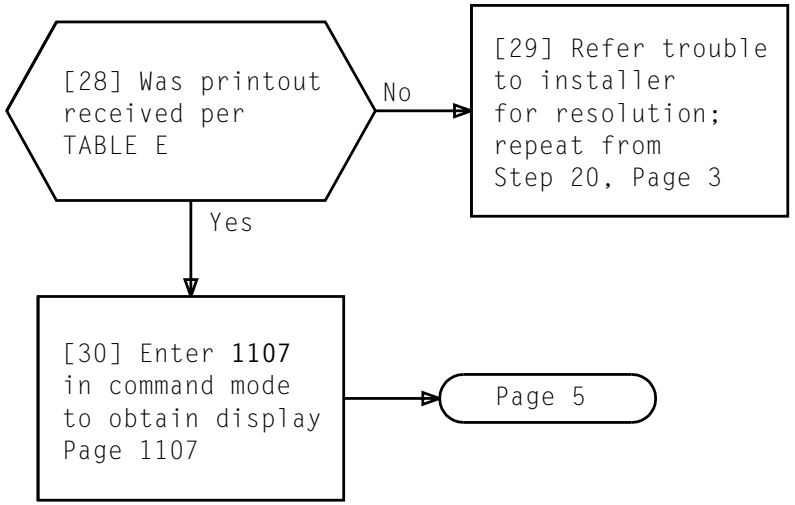

TABLE E	
MESSAGE NUMBER	**OUTPUT MESSAGE**
1	RST LN32 aa TASK n MSG STARTED RING RST LN32 aa COMPLETED REPT DLNCM PROC (Pump): LN32 aa PUMP STARTED REPT DLNCM PROC (Pump): LN32 aa COMPLETED IN nn MSEC

RESTORE EQUIPPED LINK NODES UNCONDITIONALLY

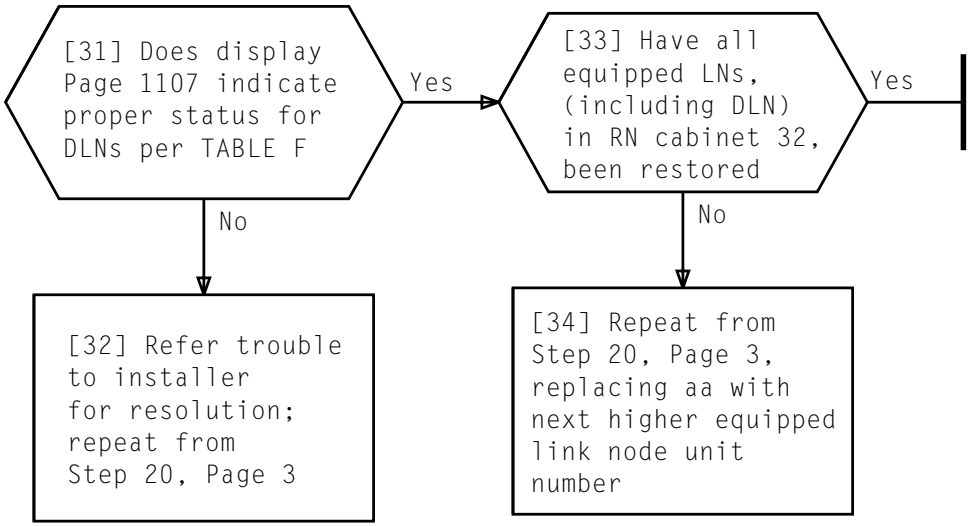

TABLE F

DLN	FIELD	STATUS
LNaa b	HDWR STATE	ACT
	APPL STATE	ACT
	MODE	1WAY IN
	STREAM	SCANIN
LNaa b	HDWR STATE	ACT
	APPL STATE	ACT
	MODE	1WAY OUT
	STREAM	SCANOUT

aa = RN cabinet number (00 or 32)
b = DLN member number

RESTORE EQUIPPED LINK NODES UNCONDITIONALLY

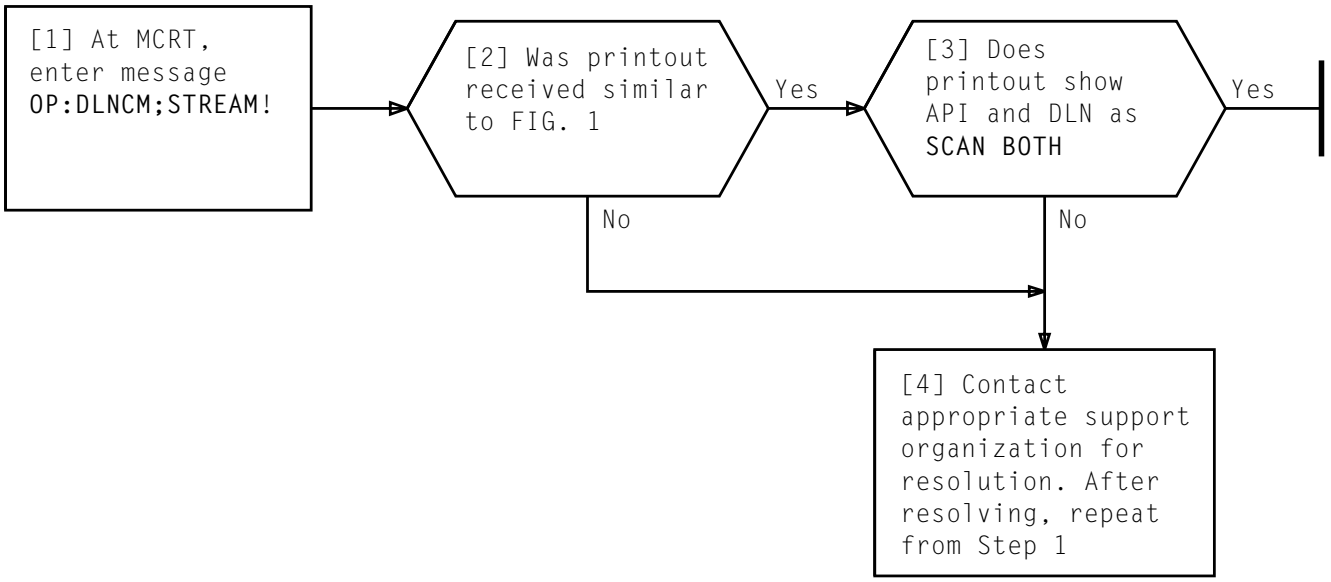


```
OP DLNCM STREAM COMPLETED

API-DLN STREAM STATUS

API: SCAN BOTH                      DLN: SCAN BOTH

INCOMING BUFFER                     OUTGOING BUFFER
   START             X'--------'        START             X'--------'
   END               X'--------'        END               X'--------'
   LOAD POINTER      X'--------'        LOAD POINTER      X'--------'
   UNLOAD POINTER    X'--------'        UNLOAD POINTER    X'--------'
   END POINTER       X'--------'        END POINTER       X'--------'
  -------- = Variable HEX data
```

FIG. 1 — Sample OP:DLNCM Printout

VERIFY API-DLN STREAM STATUS

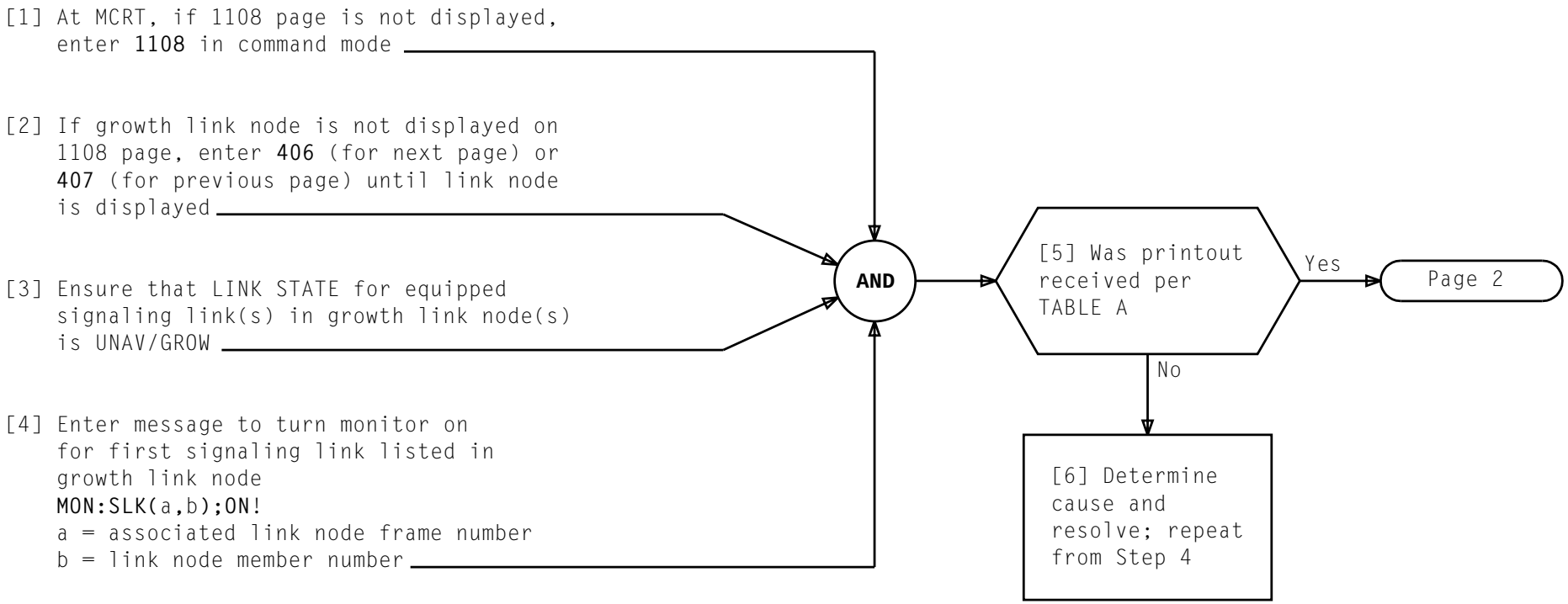

TABLE A

MESSAGE NUMBER	OUTPUT MESSAGE
1	RING MON SLK a b COMPL LINK a b c MONITOR ON, EVENTS d

a = associated link node frame number
b = link node member number
c = far-end CLLI* code
d = CDE7F

* COMMON LANGUAGE is a registered trademark and CLEI, CLLI, CLCI, and CLFI are trademarks of Bell Communications Research, Inc.

TEST EQUIPPED SIGNALING LINK(S) IN GROWTH LINK NODE(S)

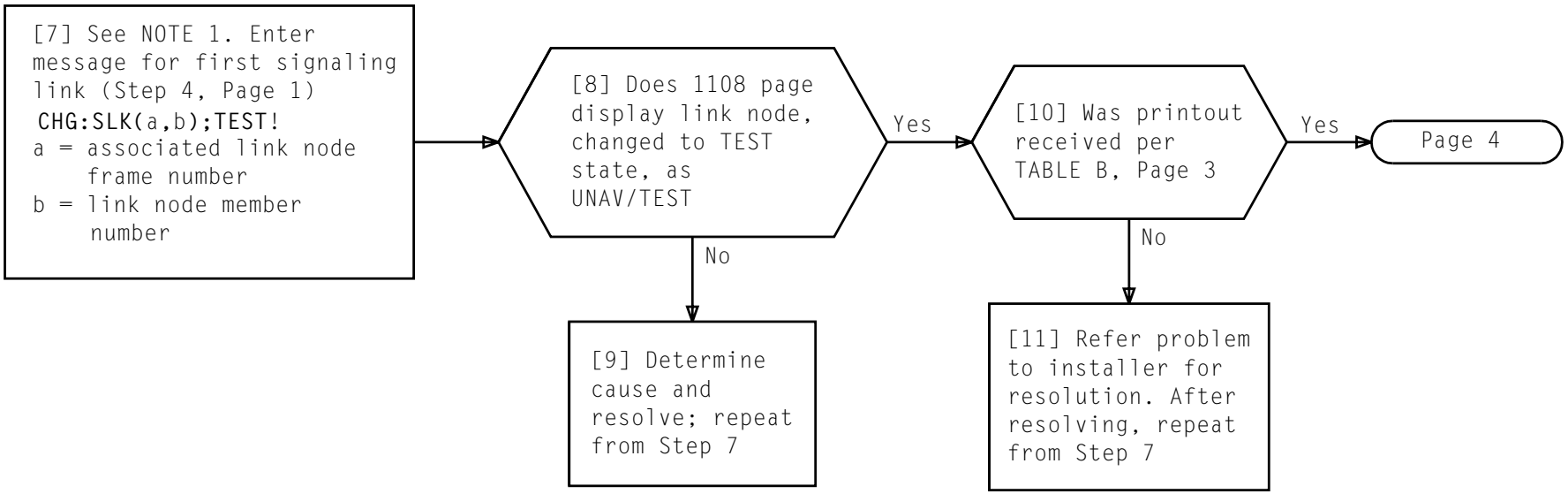

NOTE 1
It may take several minutes for prove-in to complete

TEST EQUIPPED SIGNALING LINK(S) IN GROWTH LINK NODE(S)

TABLE B

MESSAGE NUMBER	OUTPUT MESSAGE
1	RING REPT MON:SLK SLK a b c UNA GROW MINOR CHANGE REQUESTED, nnnnnnnnnn RING CHG SLK a b COMPL SLK CHANGE ACCEPTED, NEW MINOR STATE = TEST RING REPT MON:SLK SLK a b c UNA TEST LEVEL 2 DEMAND RESTART, nnnnnnnnnn RING REPT MON:SLK SLK a b c UNA TEST LEVEL 2 DEMAND RESTART, nnnnnnnnnn RING REPT MON:SLK SLK a b c UNA TEST LEVEL 2 DEMAND RESTART, nnnnnnnnnn

a = associated link node frame number
b = link node member number
c = far-end CLLI code
n = variable numbers

TEST EQUIPPED SIGNALING LINK(S) IN GROWTH LINK NODE(S)

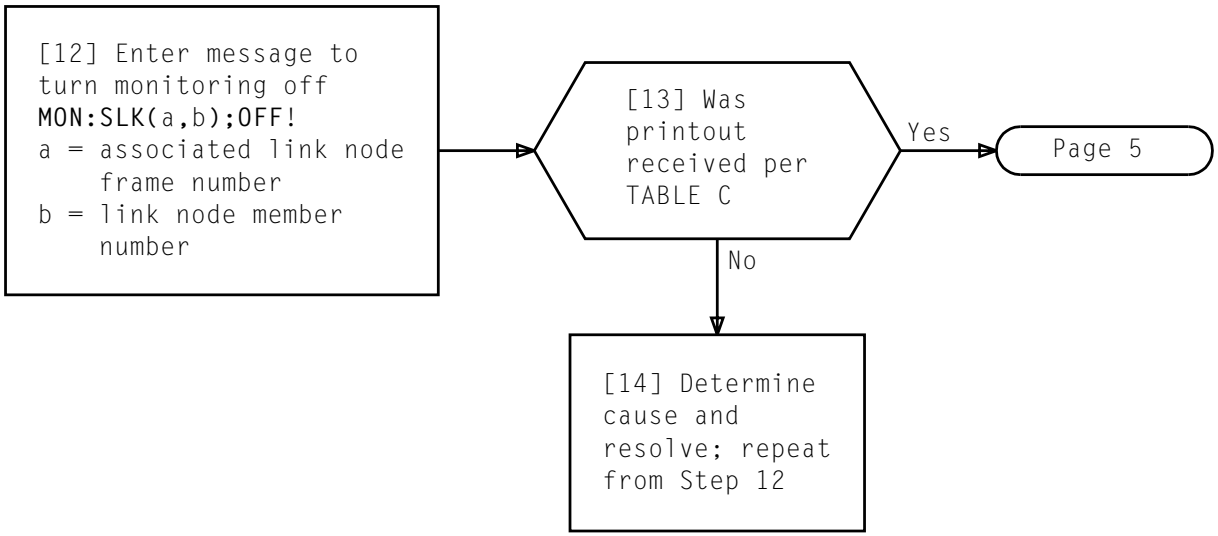

TABLE C

MESSAGE NUMBER	OUTPUT MESSAGE
1	RING MON SLK a b COMPL LINK a b c MONITOR OFF, EVENTS 0

a = associated link node frame number
b = link node member number
c = far-end CLLI code

TEST EQUIPPED SIGNALING LINK(S) IN GROWTH LINK NODE(S)

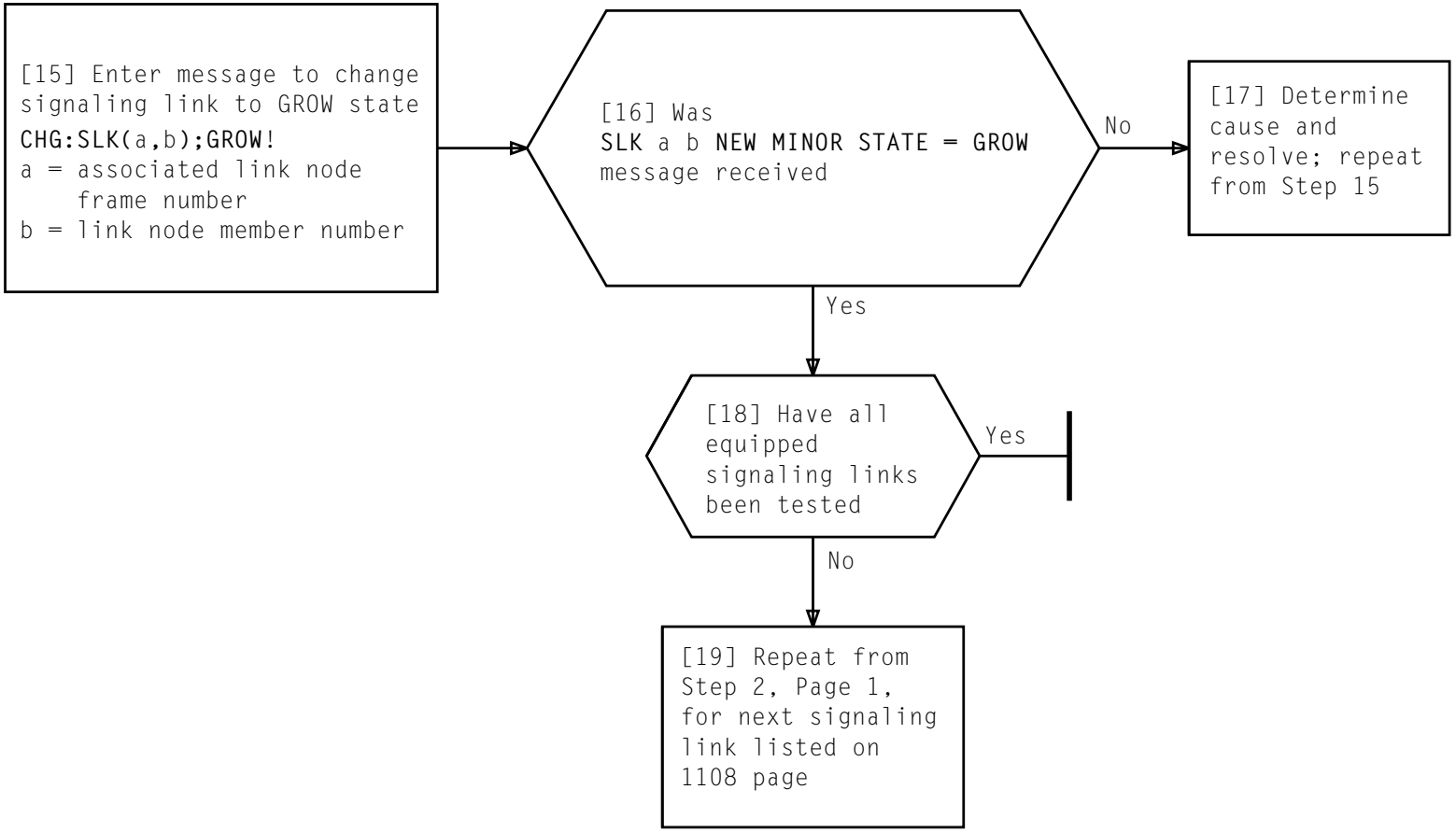

TEST EQUIPPED SIGNALING LINK(S) IN GROWTH LINK NODE(S)

[1] At MCRT, if 1108 page is not displayed, enter **1108** in command mode

[2] If growth signaling link is not displayed on 1108 page, enter **406** (for next page) or **407** (for previous page) until growth signaling link is displayed

[3] Ensure that LINK STATE for growth signaling link is UNAV/GROW

[4] Enter message for growth signaling link
CHG:SLK(a,b,c,d**);TEST!**
a = group number (0-63)
b = member number (1-15)
c = link interface pack number (0 or 1 for SSI, 0 for HDRNC)
d = port number (0-3)

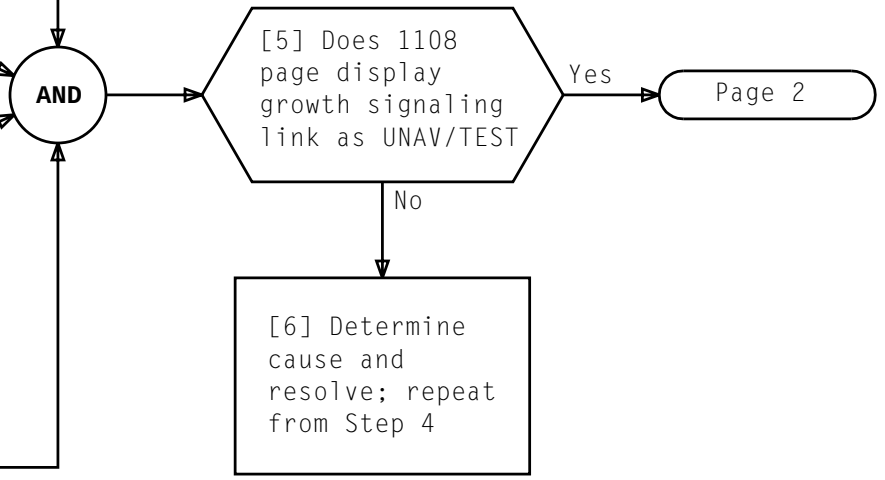

TEST GROWTH SIGNALING LINK(S) — INTERNAL LINK CHECK

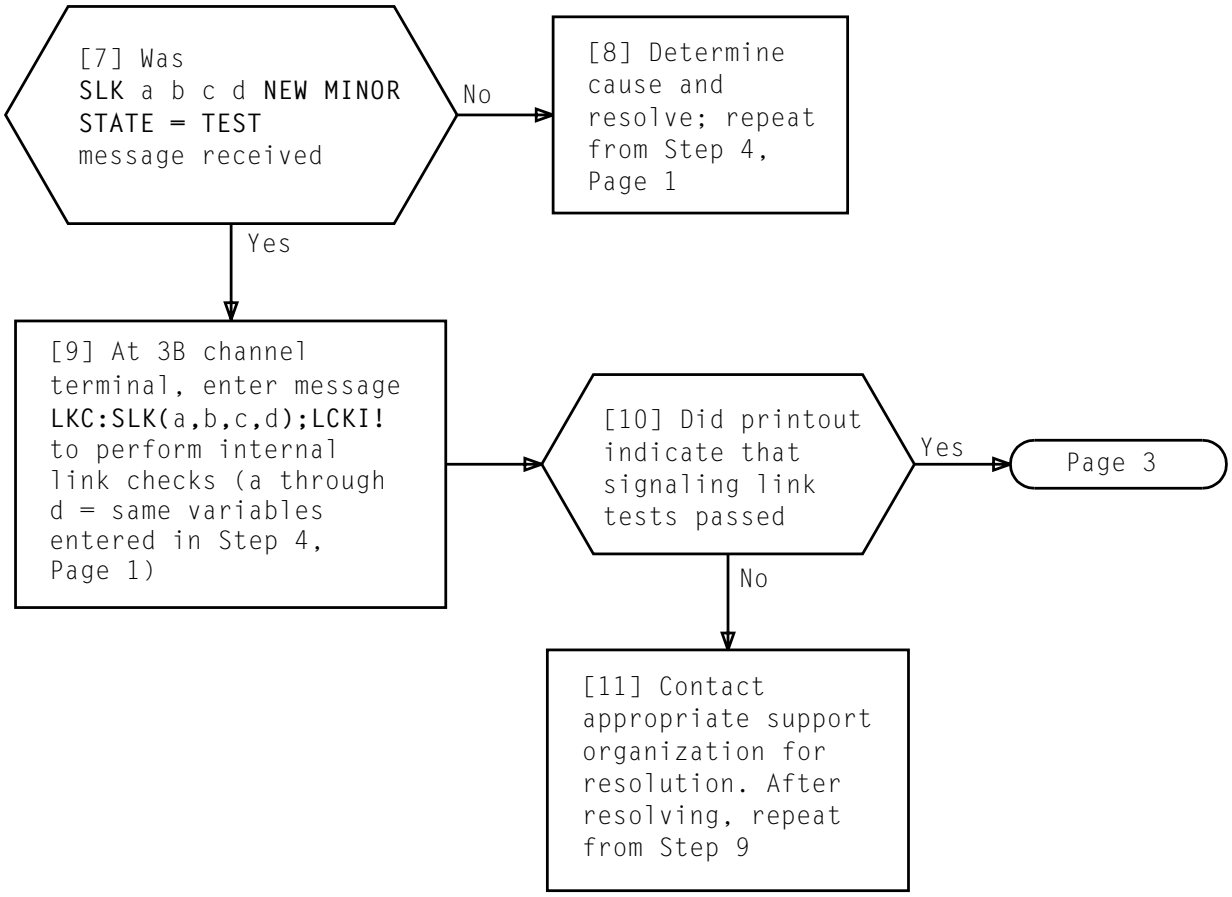

TEST GROWTH SIGNALING LINK(S) — INTERNAL LINK CHECK

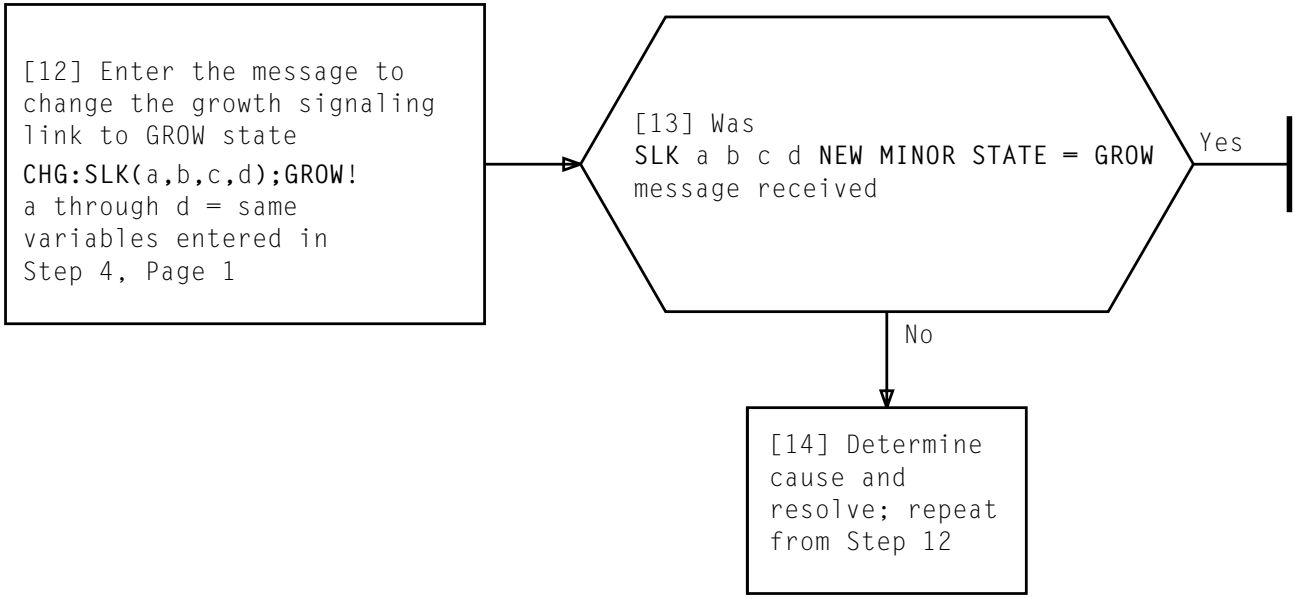

TEST GROWTH SIGNALING LINK(S) – INTERNAL LINK CHECK

ADD OFFICE IDENTIFICATION DATA TO DATA BASE

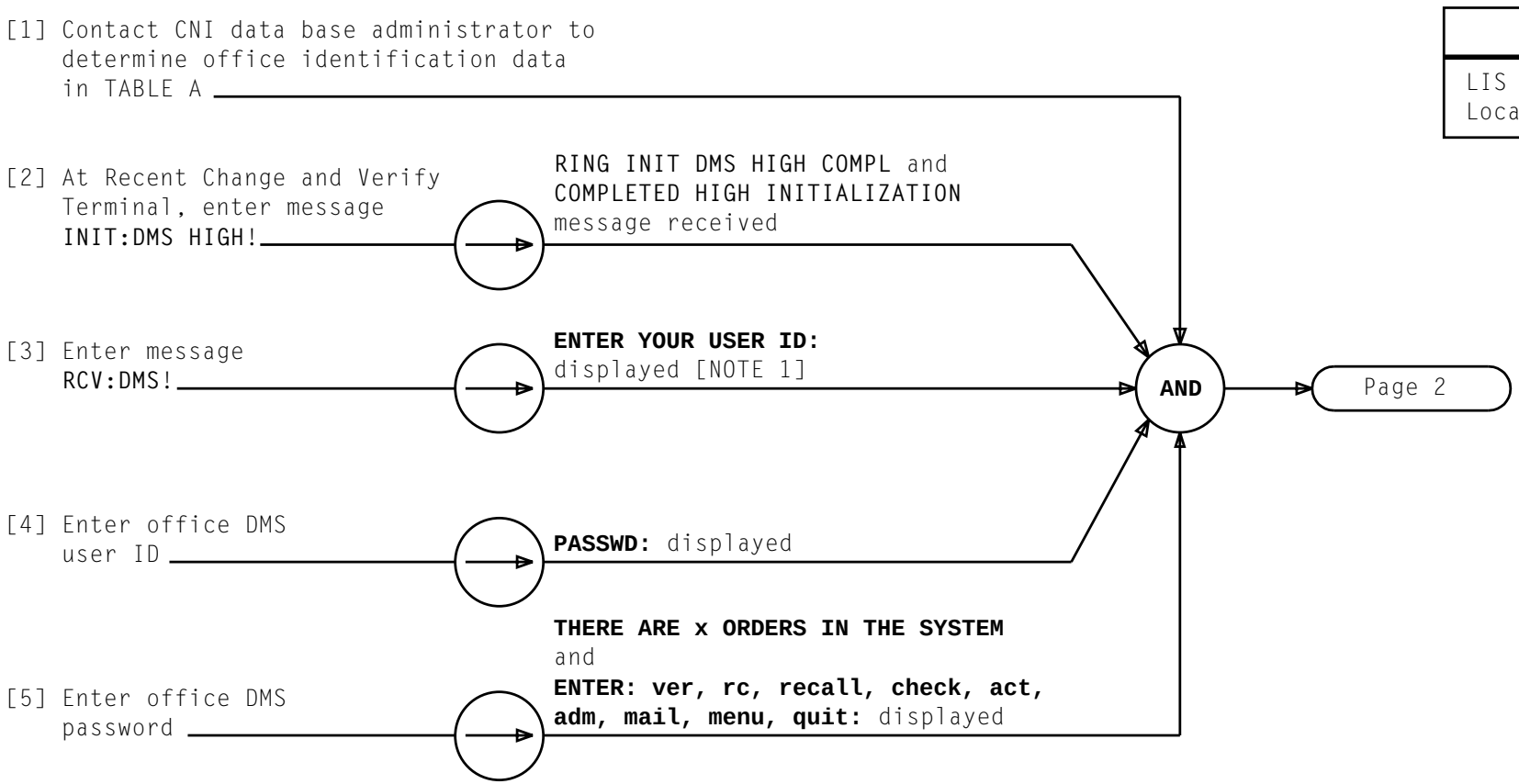

TABLE A
LIS Destination Local Point Code

NOTE 1

If **ENTER YOUR USER ID:** is not received, **BREAK** key will have to be depressed

Issue 6	**SEP 1998**
234-153-055	**DLP**
PAGE 1 of 4	**516**

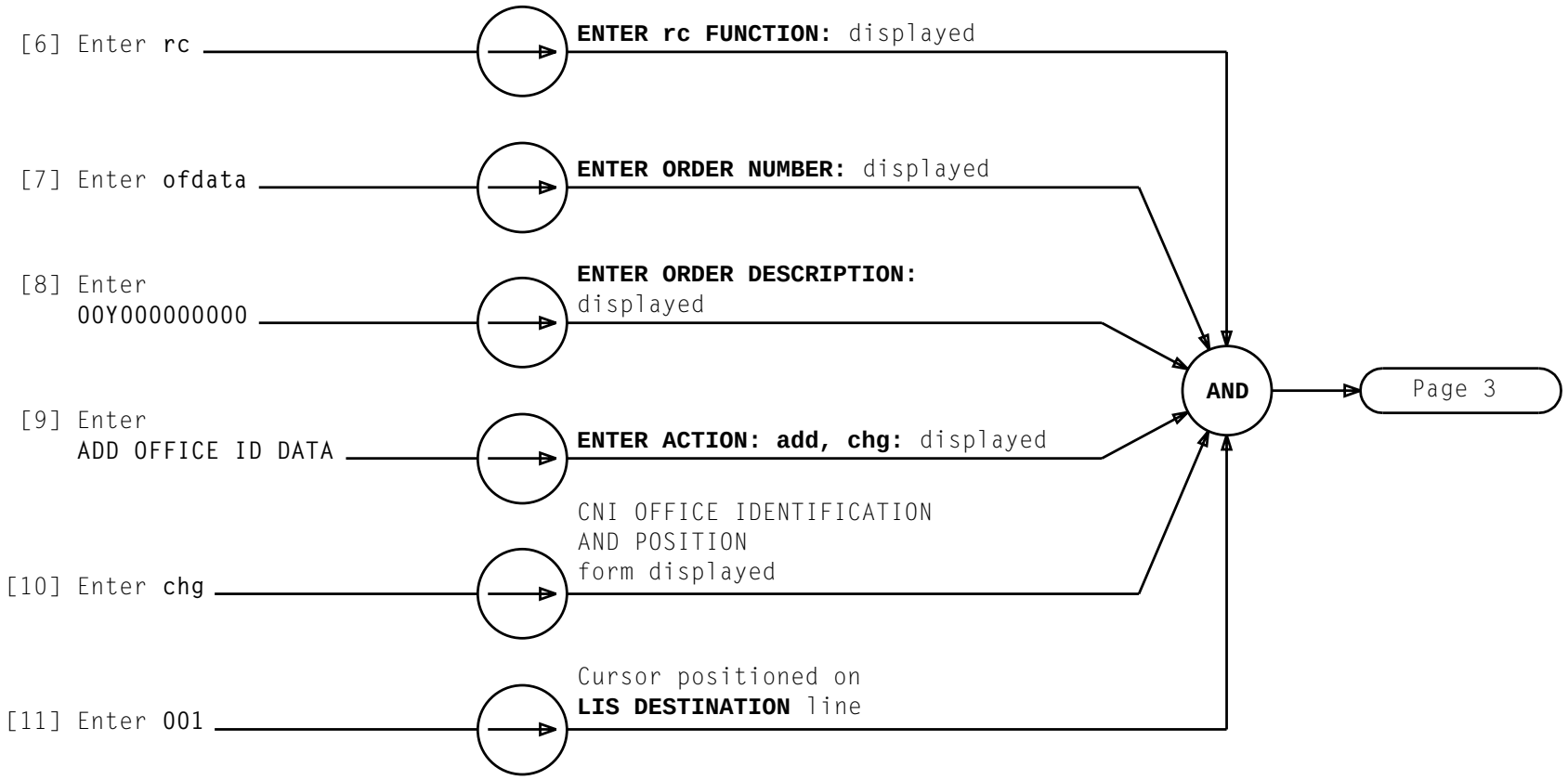

ADD OFFICE IDENTIFICATION DATA TO DATA BASE

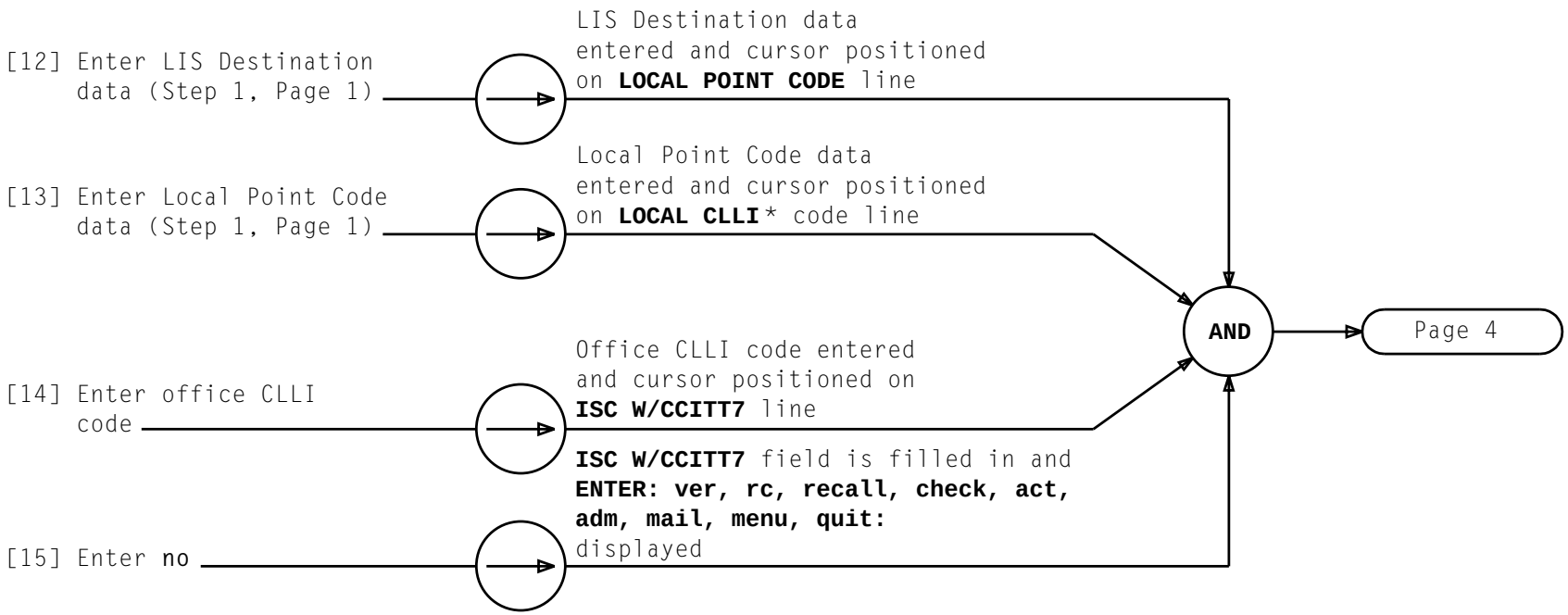

* COMMON LANGUAGE is a registered trademark and CLEI, CLLI, CLCI, and CLFI are trademarks of Bell Communications Research, Inc.

ADD OFFICE IDENTIFICATION DATA TO DATA BASE

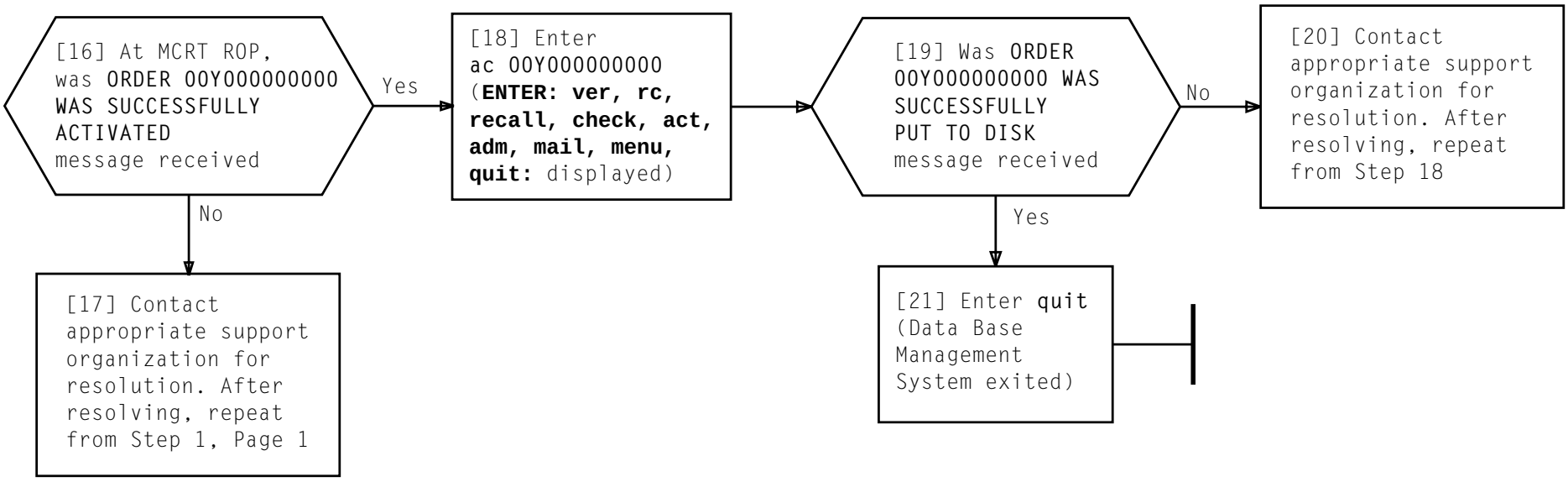

ADD OFFICE IDENTIFICATION DATA TO DATA BASE

1. General

A Data Base Management System (DMS) order number is a 12-digit value to be used for each entry into DMS. See FIG. 1. First two leftmost digits are for office region. Next position is always a Y. Last part of order number is a 9-digit number. The 9-digit number is made up of month, day, year, and a 3-digit value from 000 to 499. This 9-digit number can only be used once. After order number has been determined, it should be entered into a log with reason for DMS entry. A new Log Sheet should be used for each day with sequence numbers starting with 000.

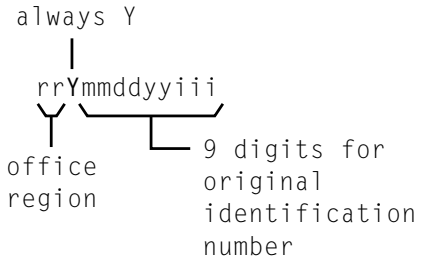

FIG. 1 – DMS Order Number Format

2. Determine Order Number

2.1 Obtain DMS Log Book.

2.2 If new Log Sheet is required because of a new day or all lines are filled, make copy of FIG. 2, Page 2.

2.3 Determine 2-digit region number for office and record on Log Sheet.

2.4 Third leftmost character is a Y.

2.5 Determine today's date in format of month, day, and year and record on Log Sheet.

2.6 On Log Sheet under column heading **SEQUENCE NUMBER 000-499**, determine next available sequence number in range of 000-499.

2.7 Record 3-digit sequence number on Log Sheet.

2.8 Record explanation for this order number on Log Sheet.

DETERMINE DATA BASE MANAGEMENT SYSTEM ORDER NUMBER

DATA BASE MANAGEMENT SYSTEM LOG SHEET

ORDER NUMBER						DMS CHANGE DESCRIPTION
OFFICE REGION (2-DIGIT)	USER TYPE	TODAY'S DATE			SEQUENCE NUMBER 000-499	
		MONTH (2-DIGIT)	DAY (2-DIGIT)	YEAR (2-DIGIT)		
	Y					
	Y					
	Y					
	Y					
	Y					
	Y					
	Y					
	Y					
	Y					
	Y					
	Y					
	Y					
	Y					
	Y					
	Y					
	Y					
	Y					
	Y					

FIG. 2 – Sample of DMS LOG SHEET

DETERMINE DATA BASE MANAGEMENT SYSTEM ORDER NUMBER

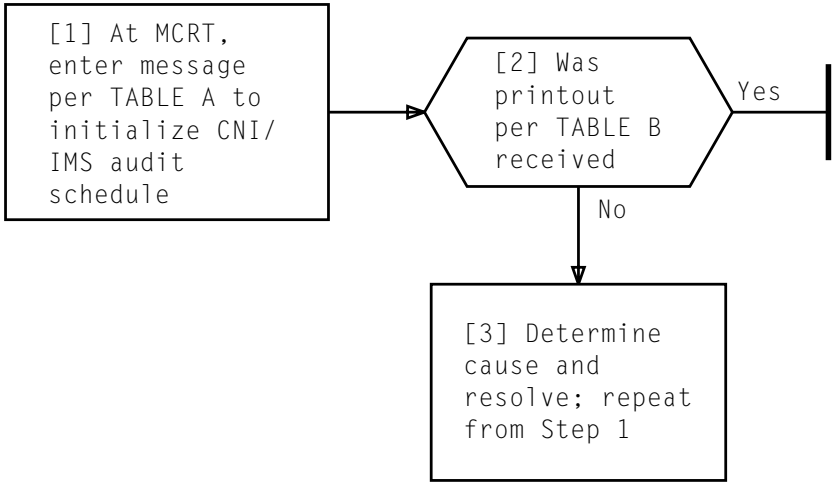

TABLE A	
MESSAGE NUMBER	**INPUT MESSAGE**
1	EXC:ENVIR:UPROC,FN"/etc/newring",ARGS("audon")!

TABLE B	
MESSAGE NUMBER	**OUTPUT MESSAGE**
1	INH AUD COMPLETED ALW AUD COMPLETED EXC ENV UPROC COMPLETED REPT newring audon COMPLETE

INITIALIZE CNI/IMS AUDIT SCHEDULE

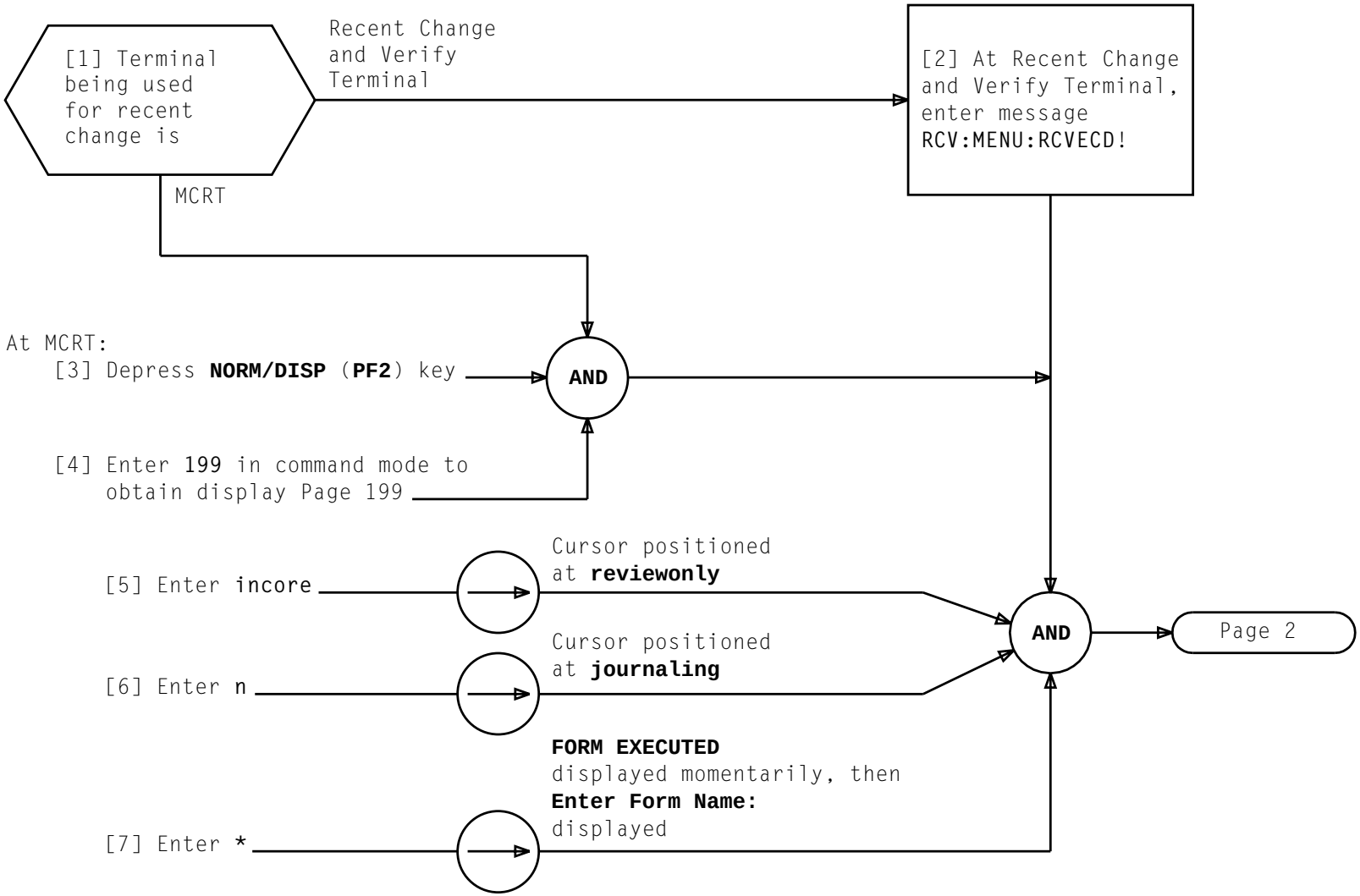

COPY INCORE EQUIPMENT CONFIGURATION DATA BASE (ECD) TO DISK

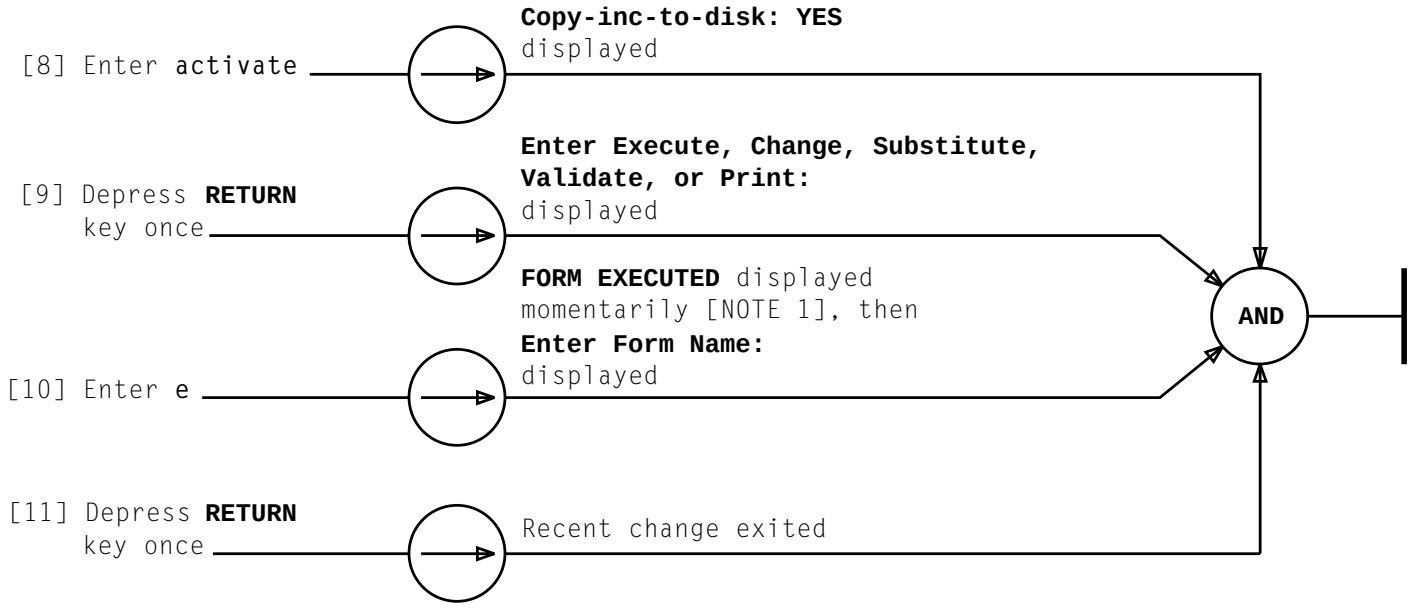

NOTE 1
It may take several minutes before **FORM EXECUTED** is displayed

COPY INCORE EQUIPMENT CONFIGURATION DATA BASE (ECD) TO DISK

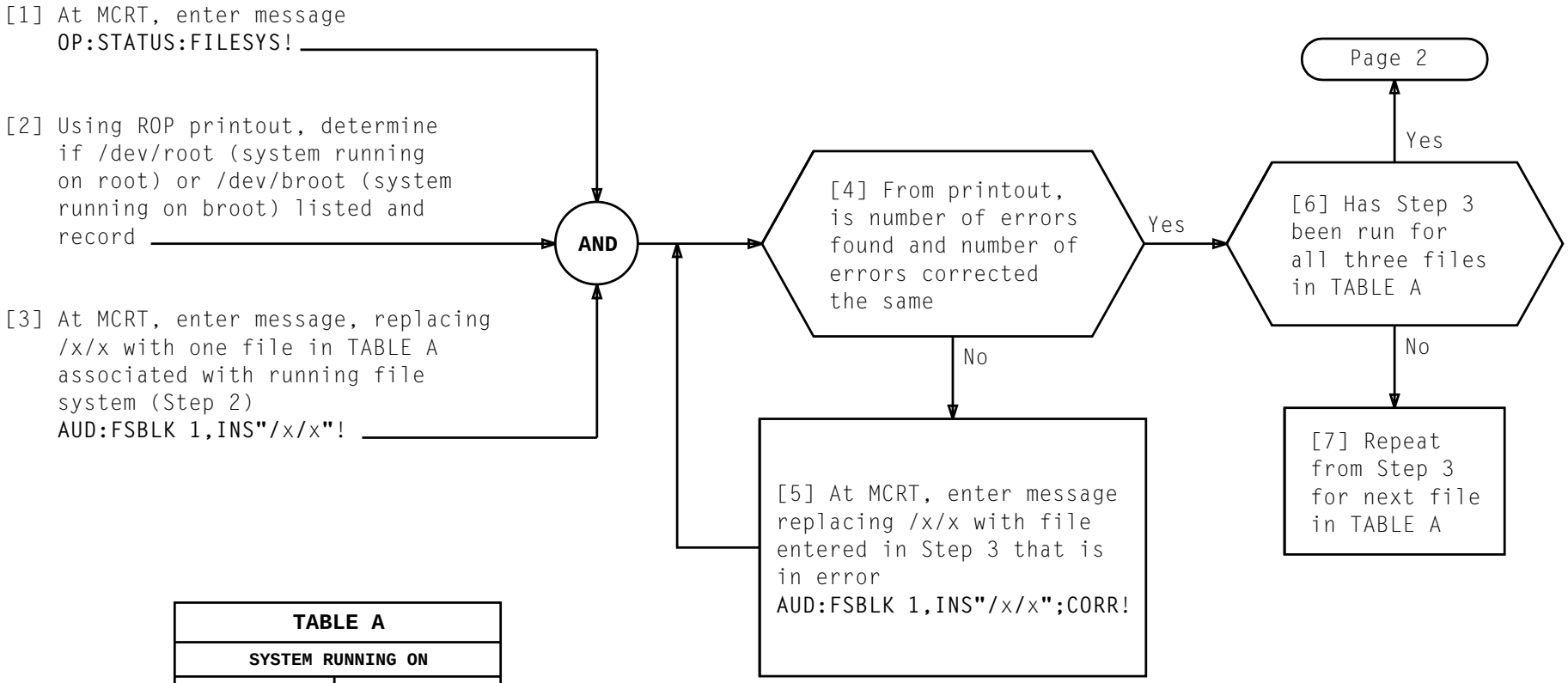

TABLE A	
SYSTEM RUNNING ON	
ROOT	BROOT
/dev/root	/dev/broot
/dev/db	/dev/bdb
/dev/etc	/dev/betc
/dev/log	/dev/log

RUN FILE SYSTEM AUDITS TO ENSURE NO FILE SYSTEM ERRORS

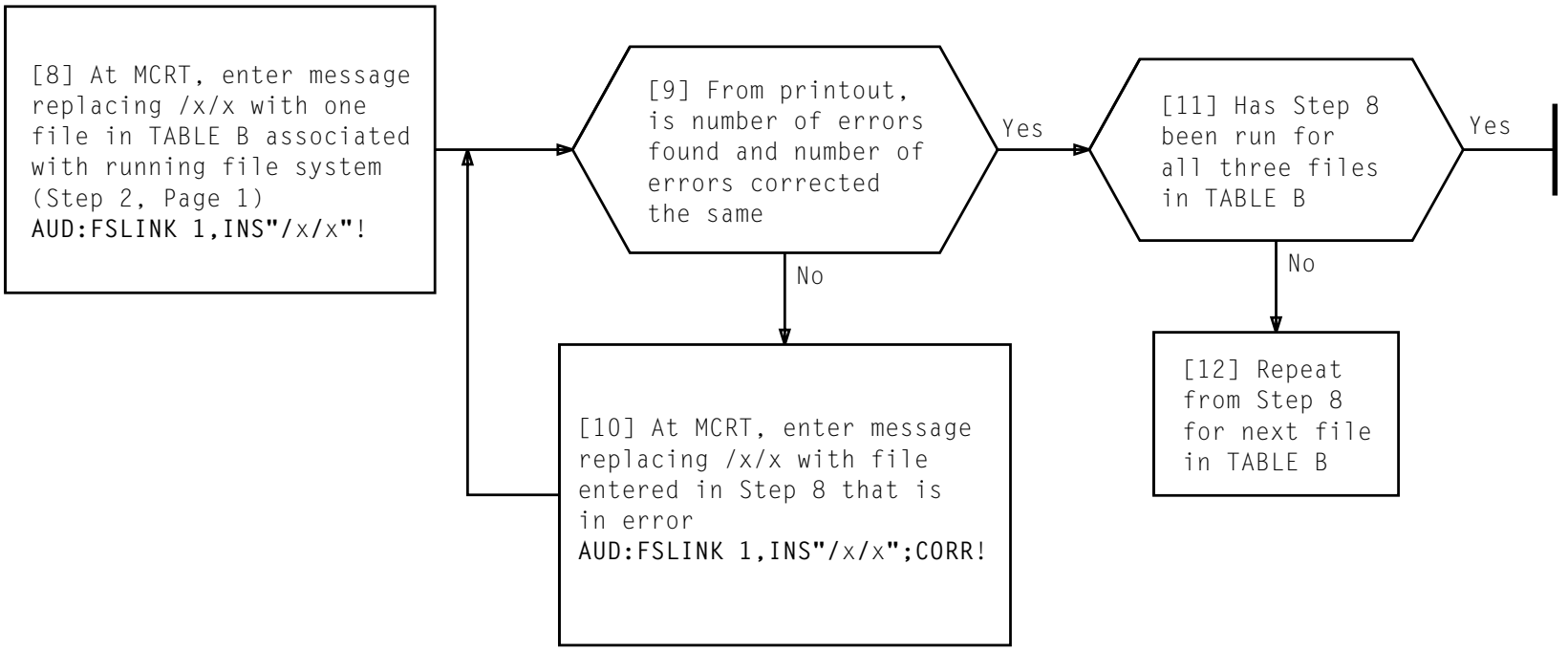

TABLE B	
SYSTEM RUNNING ON	
ROOT	BROOT
/dev/root	/dev/broot
/dev/db	/dev/bdb
/dev/etc	/dev/betc
/dev/log	/dev/log

RUN FILE SYSTEM AUDITS TO ENSURE NO FILE SYSTEM ERRORS

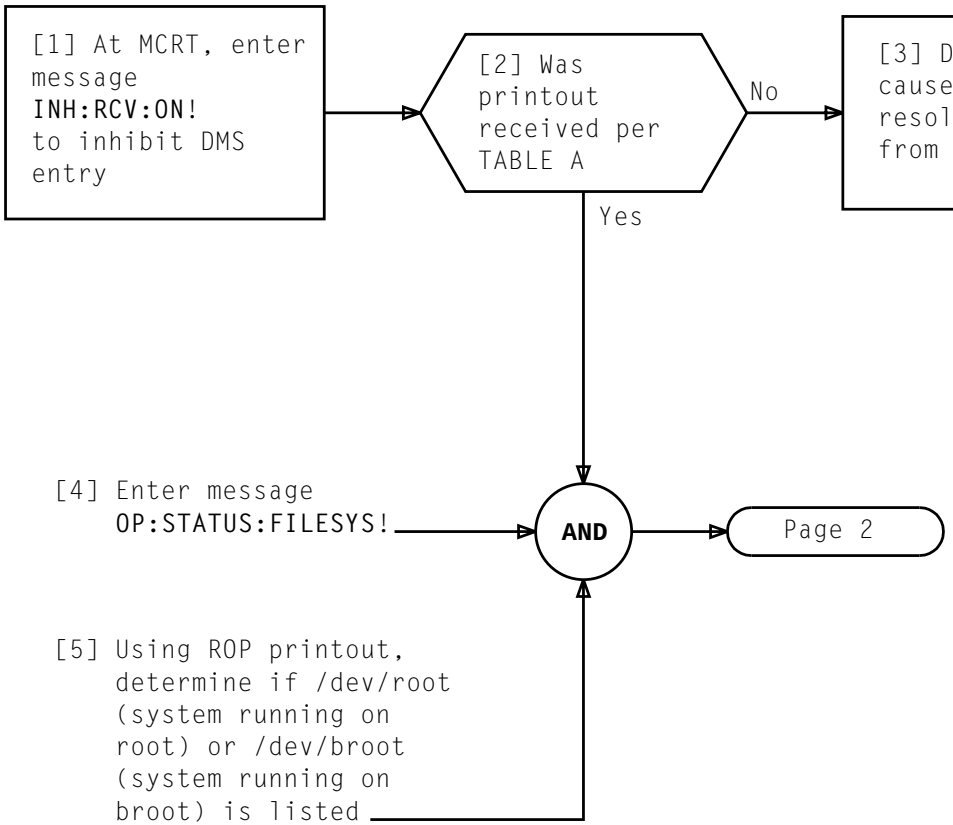

TABLE A

MESSAGE NUMBER	OUTPUT MESSAGE
1	INH RCV COMPLETED 4ESS INH RCV COMPL RECENT CHANGE INHIBIT ON

UPDATE BACKUP DATA BASE

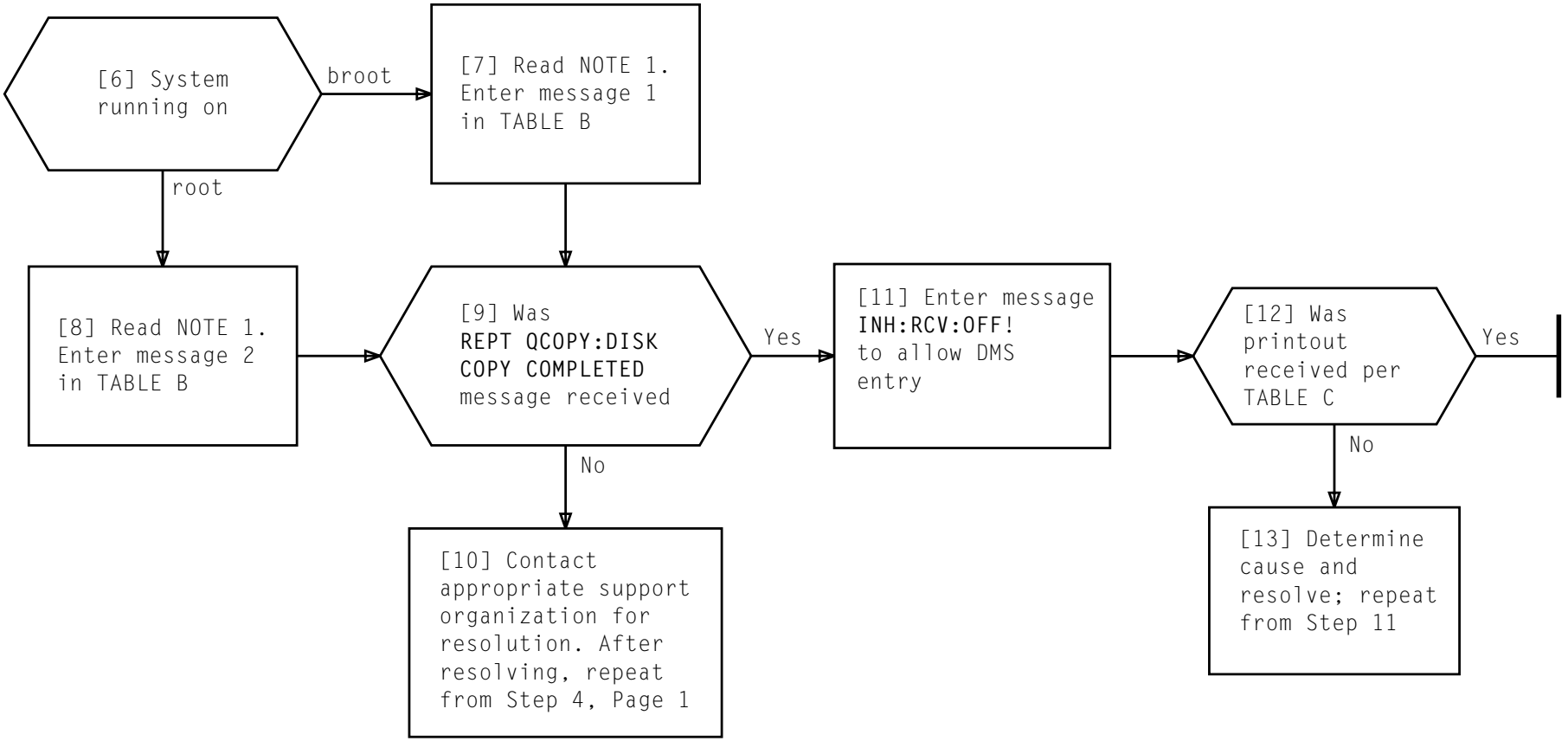

TABLE B

MESSAGE NUMBER	INPUT MESSAGE
1	EXC:QCOPY:TOROOT!
2	EXC:QCOPY:TOBROOT!

TABLE C

MESSAGE NUMBER	OUTPUT MESSAGE
1	INH RCV COMPLETED 4ESS INH RCV COMPL RECENT CHANGE INHIBIT OFF

NOTE 1
This command requires several minutes to complete

UPDATE BACKUP DATA BASE

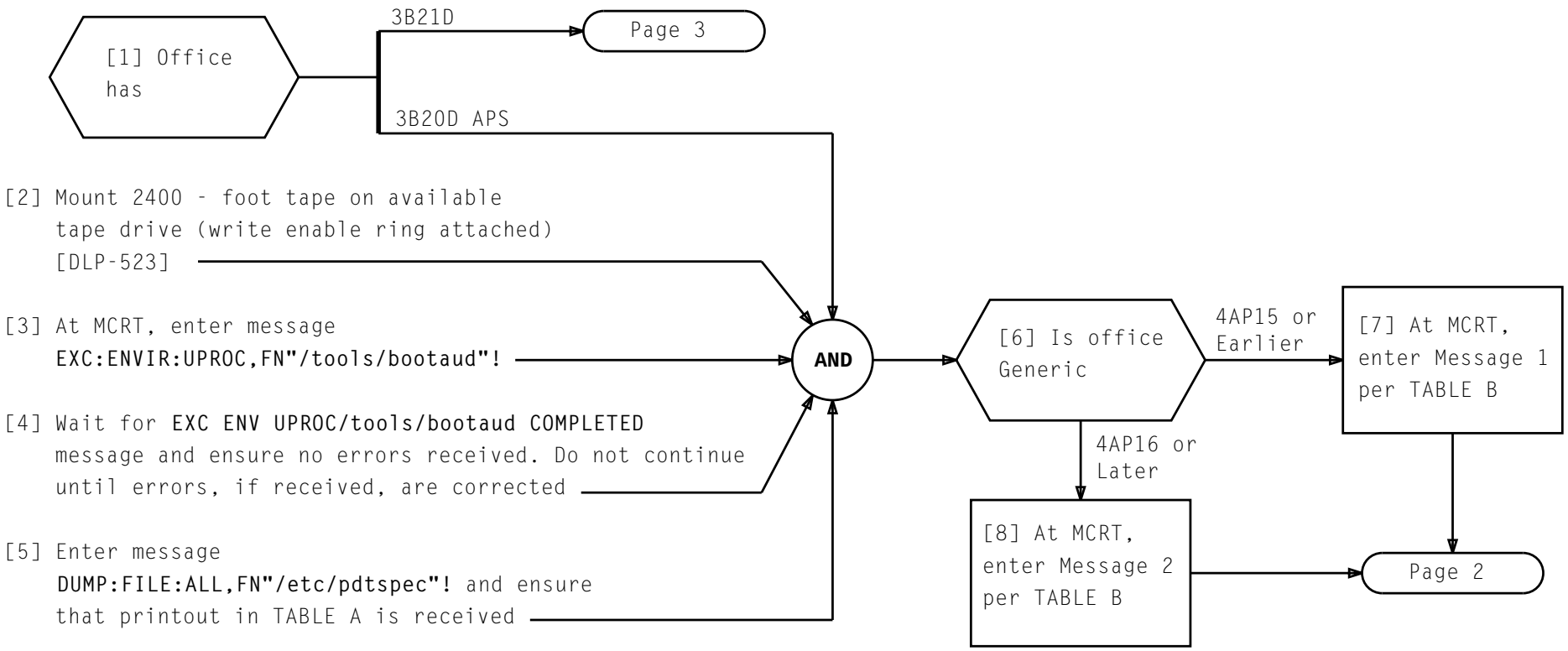

TABLE A

MESSAGE NUMBER	OUTPUT MESSAGE
1	DUMP FILE ALL COMPLETED /dev/lboot /dev/vtoc /dev/boot /dev/bboot /dev/root /dev/etc /dev/db /dev/amafiles /dev/amabfiles

TABLE B

MESSAGE NUMBER	INPUT MESSAGES
1	COPY:BKDISK;START:SRC"/dev/vtoc",TD"/dev/mtX8",TPSIZE 2200!
2	COPY:BKDISK;START:SRC"/dev/vtoc",TD"/dev/mtX8",TPSIZE 2200,COM!
X = tape drive number used in Step 2	

WRITE BACKUP TAPES

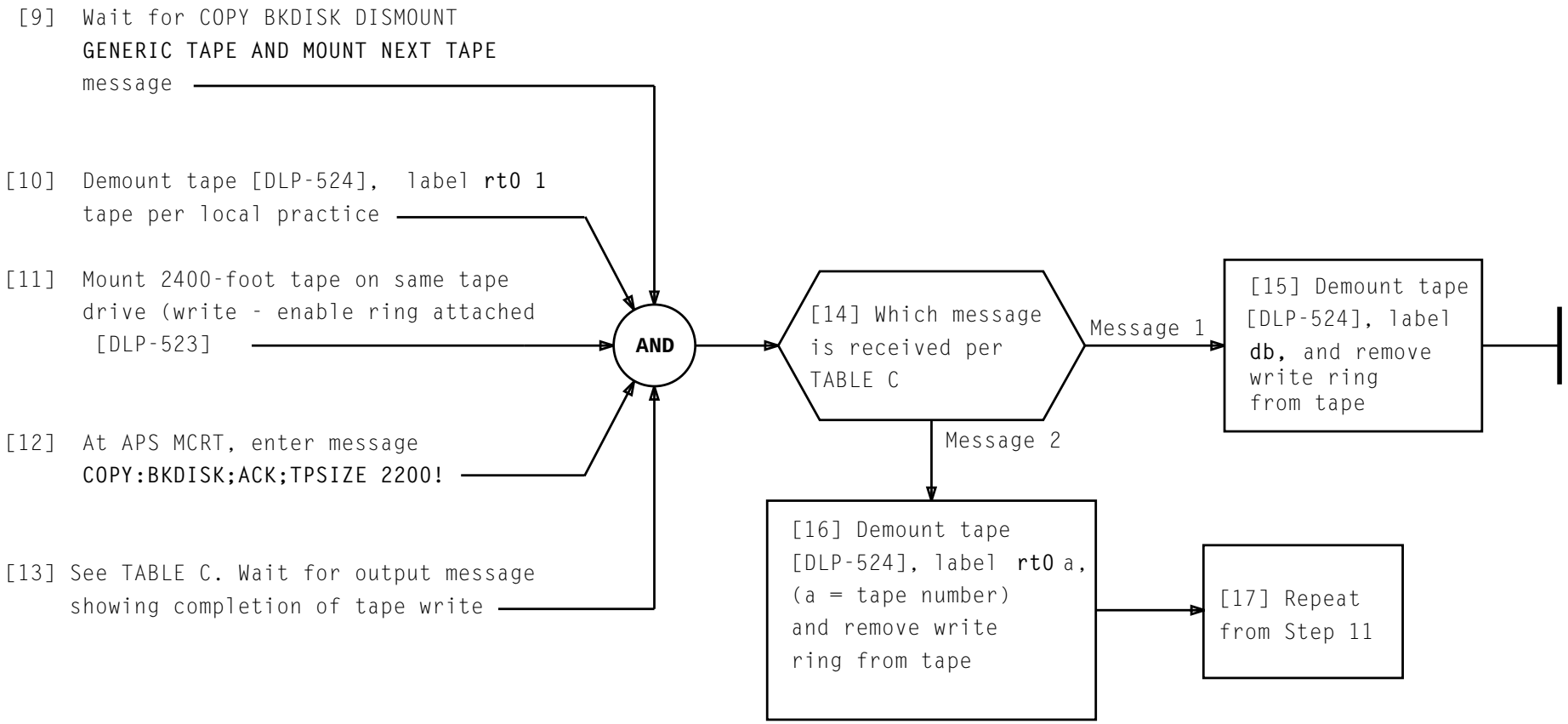

TABLE C

MESSAGE NUMBER	OUTPUT MESSAGE
1	COPY BKDISK COMPLETED DISMOUNT DATABASE TAPE AND LABEL
2	COPY DISMOUNT GENERIC TAPE LABEL AND MOUNT NEXT TAPE

WRITE BACKUP TAPES

[18] Insert blank or erasable 4-mm tape with write-protect tab is up (unlocked) position into available 3B21 APS DAT unit [DLP-523]

[19] At 3B21 APS MCRT, enter message **DUMP:FILE:ALL, FN"/etc/pdtspec"!** to dump the /etc/pdtspec file

[20] Wait for **DUMP FILE ALL COMPLETED** message and ensure that printout in TABLE D is received

[21] At 3B21 APS MCRT, enter message
COPY:DKDISK;START;START;SRC"/dev/vtoc",TD"/dev/mtX0",TPSIZE 90,COM!
[Where X = DAT unit number with backup tape inserted (0 or 1)]

[22] Wait for
COPY DKDISK DISMOUNT GENERIC TAPE LABEL AND MOUNT NEXT TAPE
message

[23] Remove tape from DAT unit [DLP-524], label the tape **rt0 1**, and put write-protect tab in down (locked) position

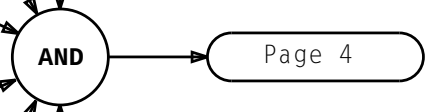

TABLE D

MESSAGE NUMBER	OUTPUT MESSAGE
1	DUMP FILE ALL COMPLETED /dev/lboot /dev/lboot21 /dev/vtoc /dev/boot /dev/bboot /dev/root /dev/etc /dev/db /dev/amafiles /dev/amabfiles

WRITE BACKUP TAPES

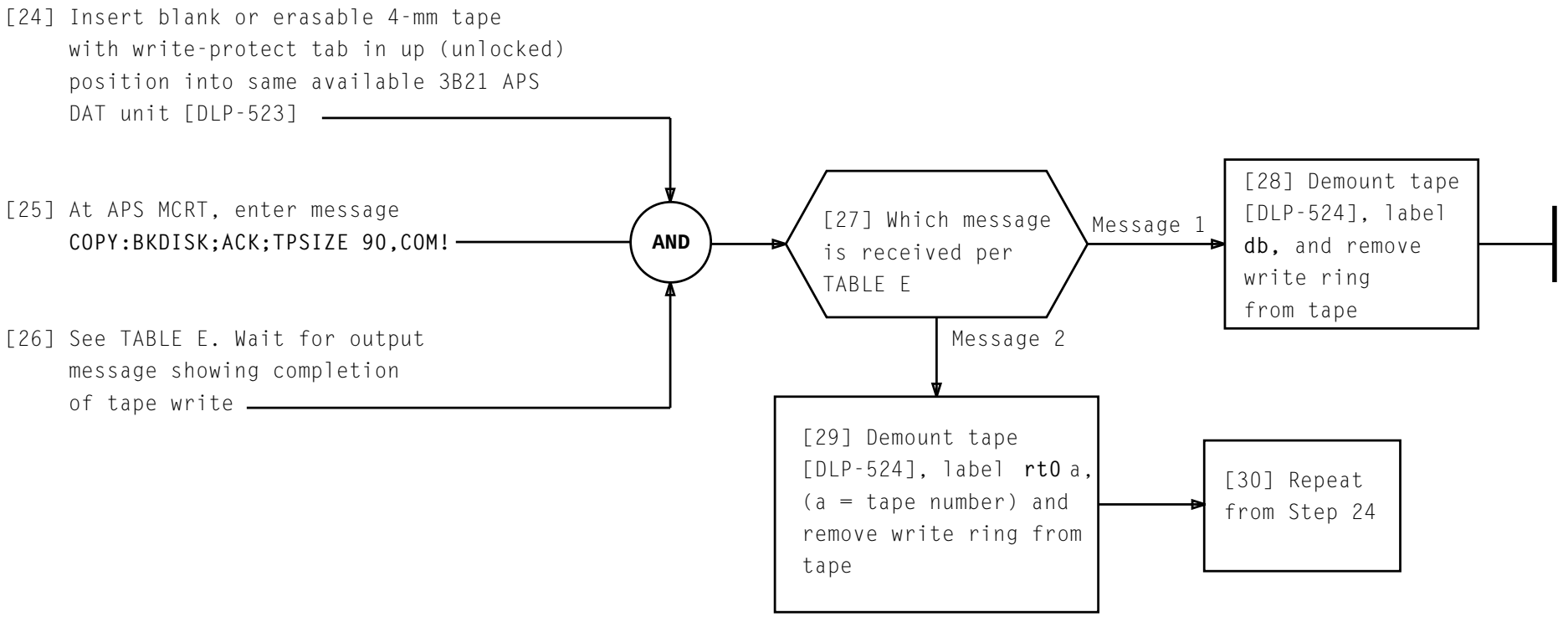

TABLE E

MESSAGE NUMBER	OUTPUT MESSAGE
1	COPY BKDISK COMPLETED DISMOUNT DATABASE TAPE AND LABEL
2	COPY DISMOUNT GENERIC TAPE LABEL AND MOUNT NEXT TAPE

WRITE BACKUP TAPES

[1] Office has

3B21D APS → Page 4

3B20D Model 2/3 APS → Page 3

3B20D Model 1 APS

[2] Open tape unit dust cover

[3] Lift supply (upper) reel hub tab. Place tape reel onto supply (upper) reel hub. See FIG. 1

[4] While holding tape reel, secure tape reel by returning supply hub tab to normal locked down position

[5] Thread tape along tape path as shown in FIG. 1

[6] Hold end of tape against take-up reel and wrap several turns clockwise by rotating reel

AND → Page 2

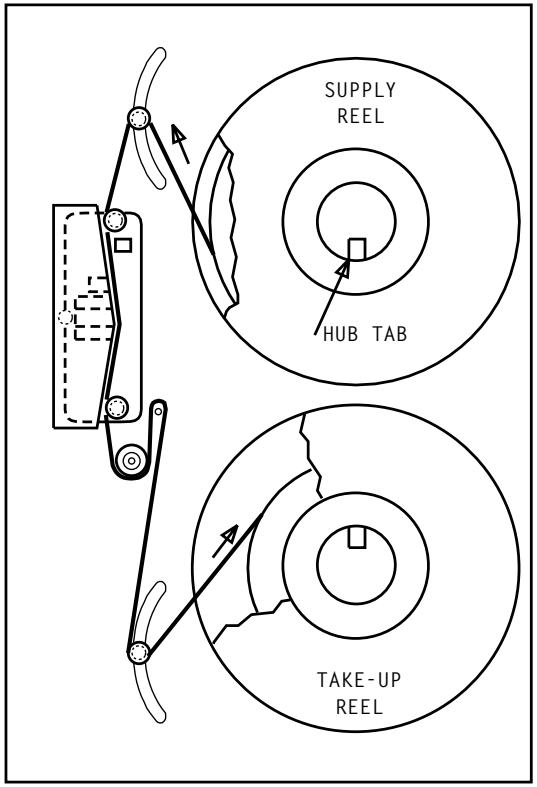

FIG. 1

MOUNT TAPE ON 3B TAPE UNIT OR DIGITAL AUDIO TAPE (DAT) UNIT

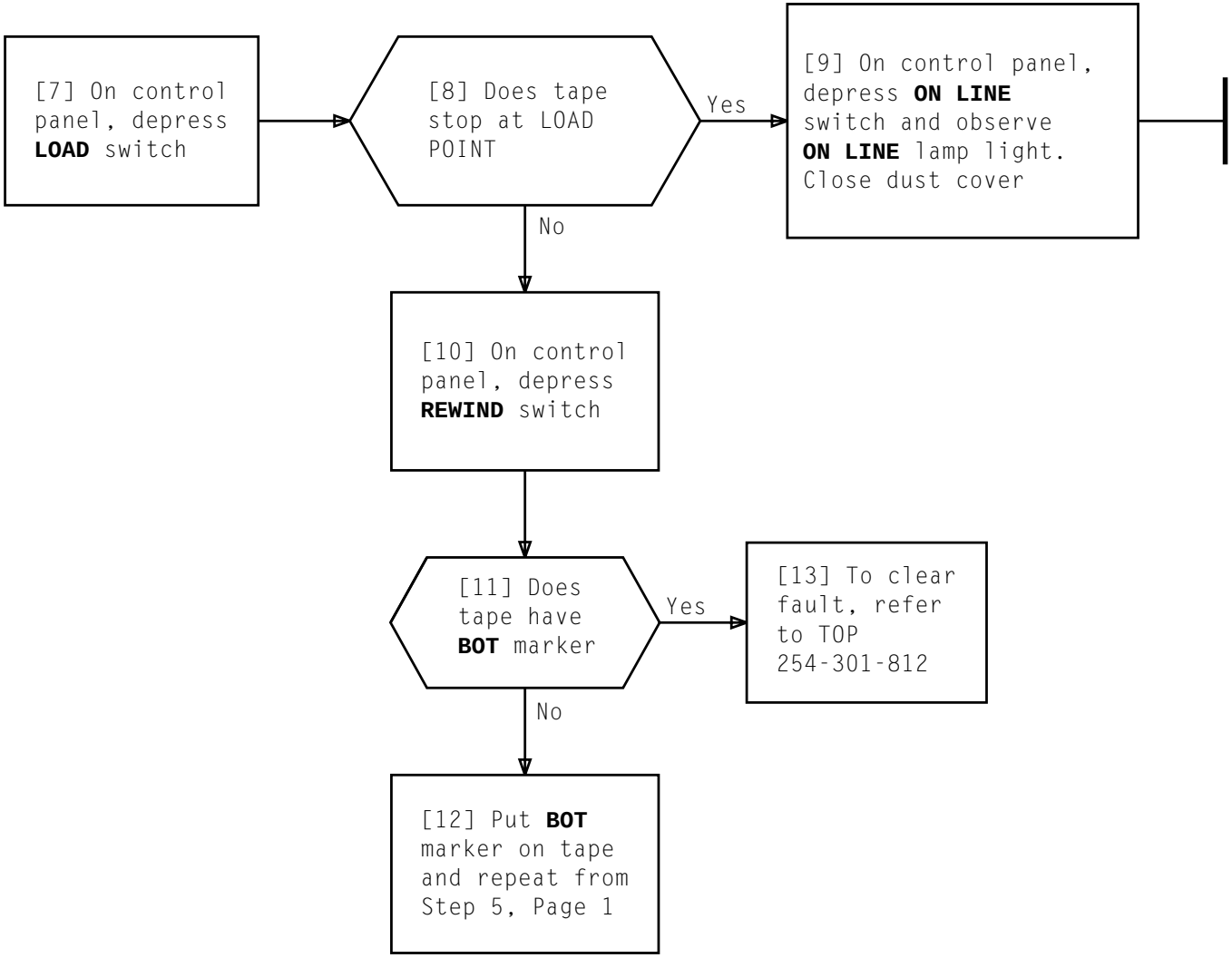

MOUNT TAPE ON 3B TAPE UNIT OR DIGITAL AUDIO TAPE (DAT) UNIT

[14] If tape is to be written, attach write-enable ring on supply reel

[15] If **LOGIC OFF** LED lighted, touch **LOGIC ON** switch

[16] Open dust cover and verify circuit breaker at side 1

[17] See FIG. 2. Place supply reel on hub and depress hub latch

[18] Thread tape from bottom of supply reel along path as shown in FIG. 2

[19] Hold end of tape against take-up reel and wrap several turns clockwise by rotating reel; then close dust cover

[20] At control panel, touch **LOAD/REWIND** switch

AND

[21] Does tape move and stop, and is **BOT** LED lighted

Yes

[24] Touch **ON LINE** switch

No

[22] Touch **RESET** switch, attach beginning of tape (BOT) marker, and repeat from Step 18

No

[23] To clear fault, refer to TOP 254-301-812

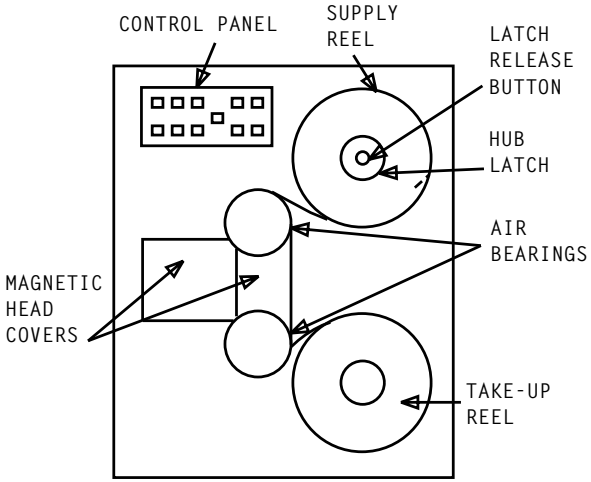

FIG. 2

MOUNT TAPE ON 3B TAPE UNIT OR DIGITAL AUDIO TAPE (DAT) UNIT

[25] Is tape to be written

No

Yes

[26] Put write-protect tab on 4-mm tape in the up (unlocked) position [FIG. 3]

[27] See NOTE 1 and CAUTION 1. At available in-service digital audio tape (DAT) unit (EQL 11-124 or 62-124), carefully insert 4-mm tape [FIG. 4]

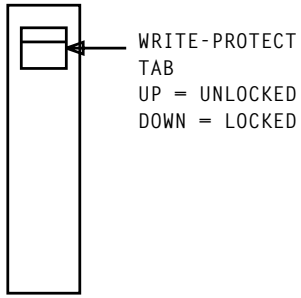

FIG. 3 — 4-mm Tape

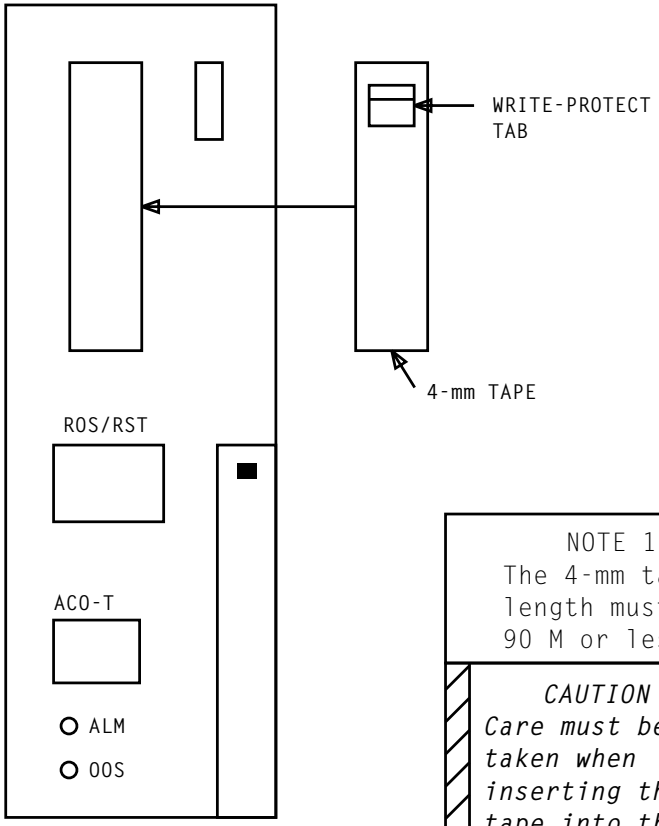

FIG. 4 — DAT Unit

NOTE 1
The 4-mm tape length must be 90 M or less

CAUTION 1
Care must be taken when inserting the tape into the DAT unit. Tape must not be forced

MOUNT TAPE ON 3B TAPE UNIT OR DIGITAL AUDIO TAPE (DAT) UNIT

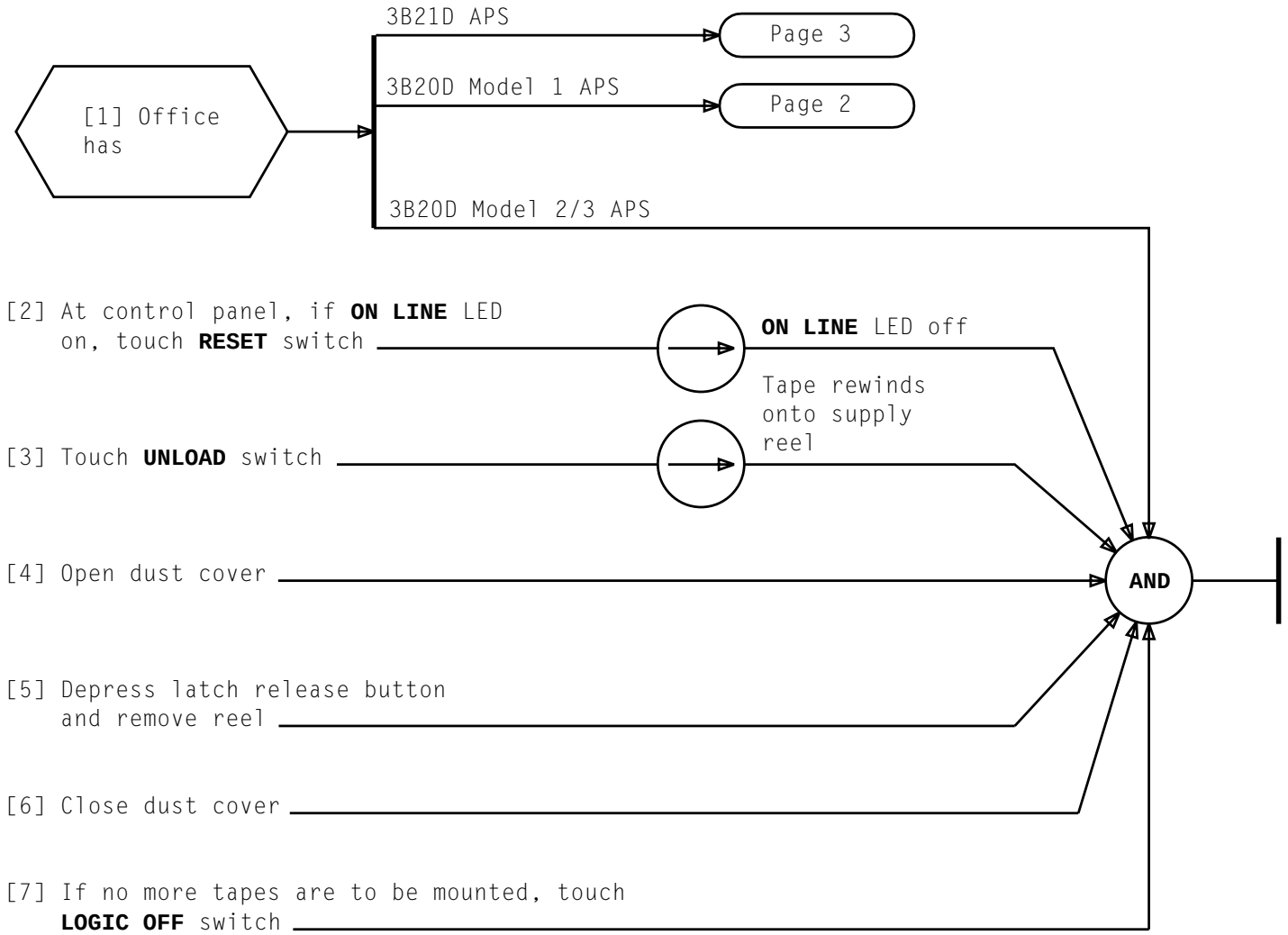

REMOVE TAPE FROM 3B TAPE UNIT OR DIGITAL AUDIO TAPE (DAT) UNIT

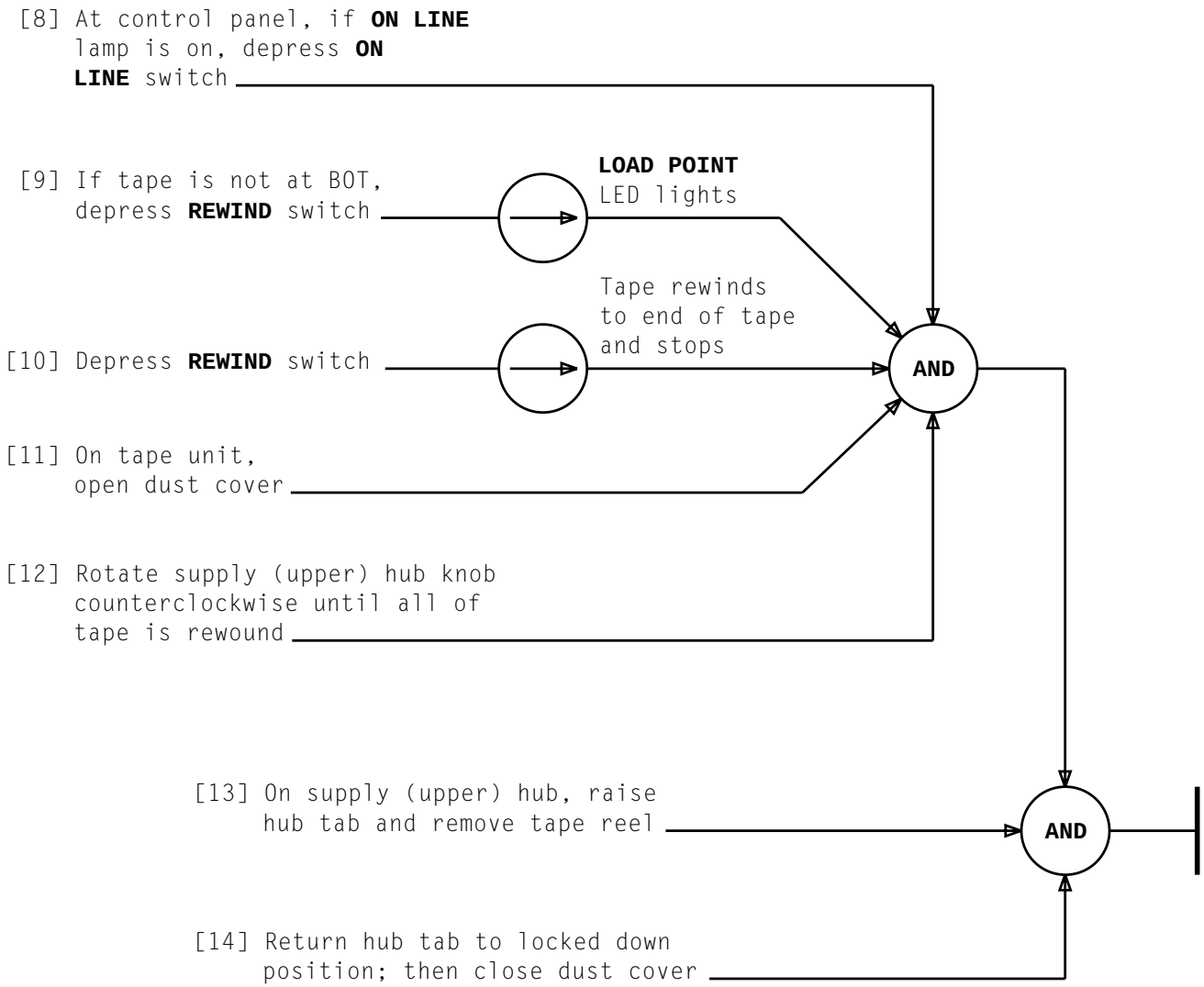

REMOVE TAPE FROM 3B TAPE UNIT OR DIGITAL AUDIO TAPE (DAT) UNIT

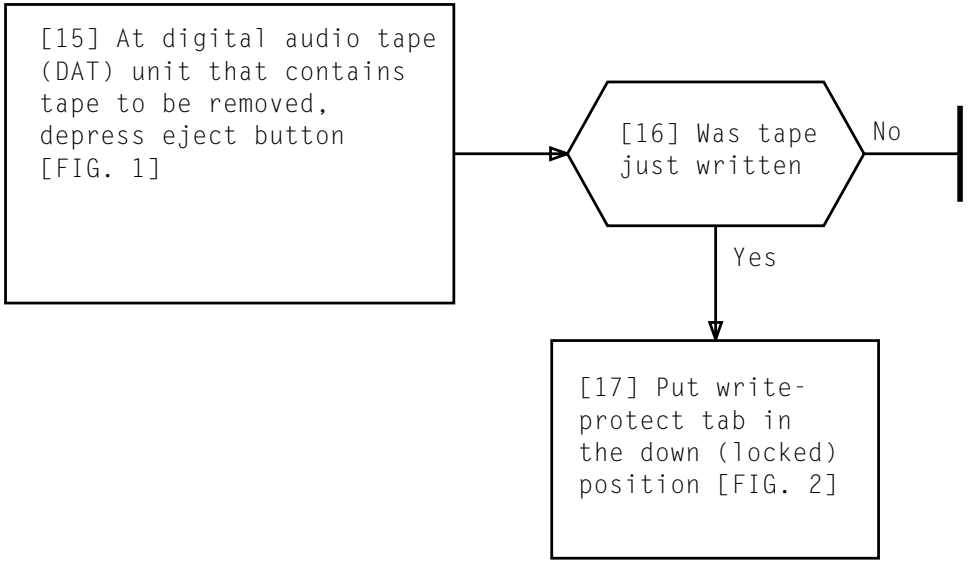

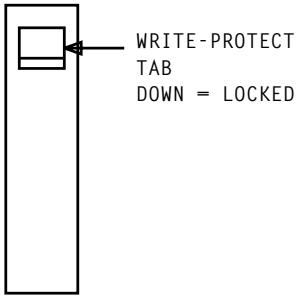

FIG. 2 – 4-mm Tape

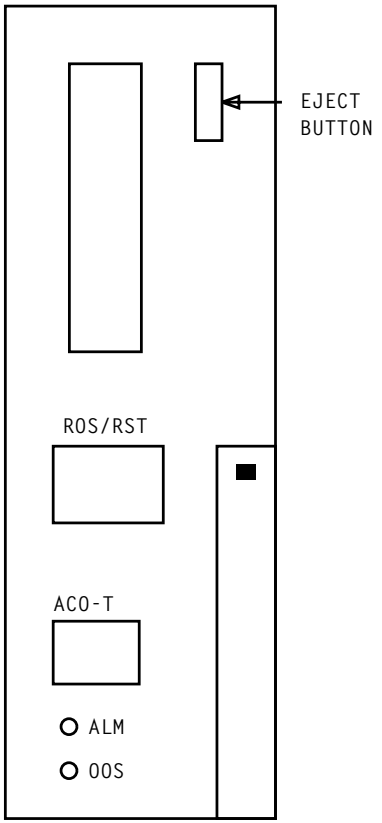

FIG. 1 – DAT Unit

REMOVE TAPE FROM 3B TAPE UNIT OR DIGITAL AUDIO TAPE (DAT) UNIT

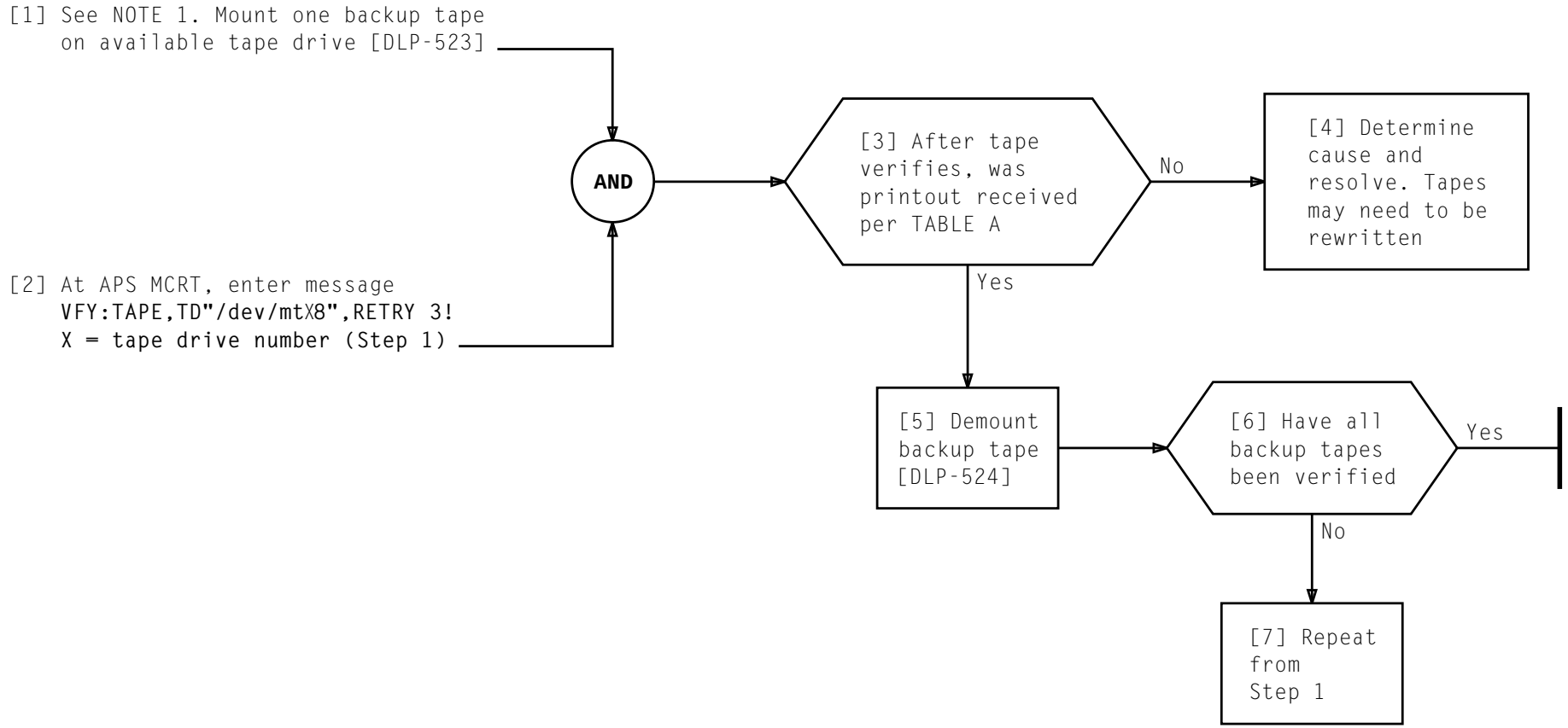

TABLE A

MESSAGE NUMBER	OUTPUT MESSAGE
1	VFY TAPE STARTED VFY TAPE COMPLETED RETRIES 0 HEADER MISMATCHES 0 DATA MISMATCHES 0

NOTE 1

Verify backup generic tapes from lowest to highest **rt0** number; then backup **db** tape

VERIFY BACKUP TAPES

[1] At MCRT, enter message
OP:SLK(a,b):DEST 1!
a = associated link node frame number
b = link node member number

[2] Using printout and FIG. 1, determine if any signaling links are listed in AVL IS state

AND

[3] Does printout show any signaling links in AVL IS state

No

Yes

[4] See NOTE 1. At MCRT, enter message per TABLE A to change one signaling link listed in printout in AVL IS state to MOOS. Record signaling link being changed

[5] Have all signaling links, listed in printout in AVL IS state, been changed to MOOS

Yes

[7] Repeat from Step 1 to verify change

No

[6] Repeat from Step 4 for next signaling link listed in printout in AVL IS state

```
RING OP SLK 0 9 IN PROG

SLK 00 09 DCHN 00 00 AVL IS
SLK 00 09 DCHN 00 01 AVL IS
SLK 00 09 DCHN 00 02 THRU 01 03 UNEQUIPPED

RING OP SLK 0 9 COMPL
```

FIG. 1 – Sample OP:SLK Printout

TABLE A

MESSAGE NUMBER	INPUT MESSAGE
1	CHG:SLK(a,b[,c,d]);MOOS;UCL!

a = associated link node frame number
b = link node member number
c = link interface pack number (0 or 1)
d = signaling link number

NOTE 1
If changing CCS7 link: **,c** and **,d** in input message are not required

CHANGE ACTIVE SIGNALING LINK(S) TO MOOS

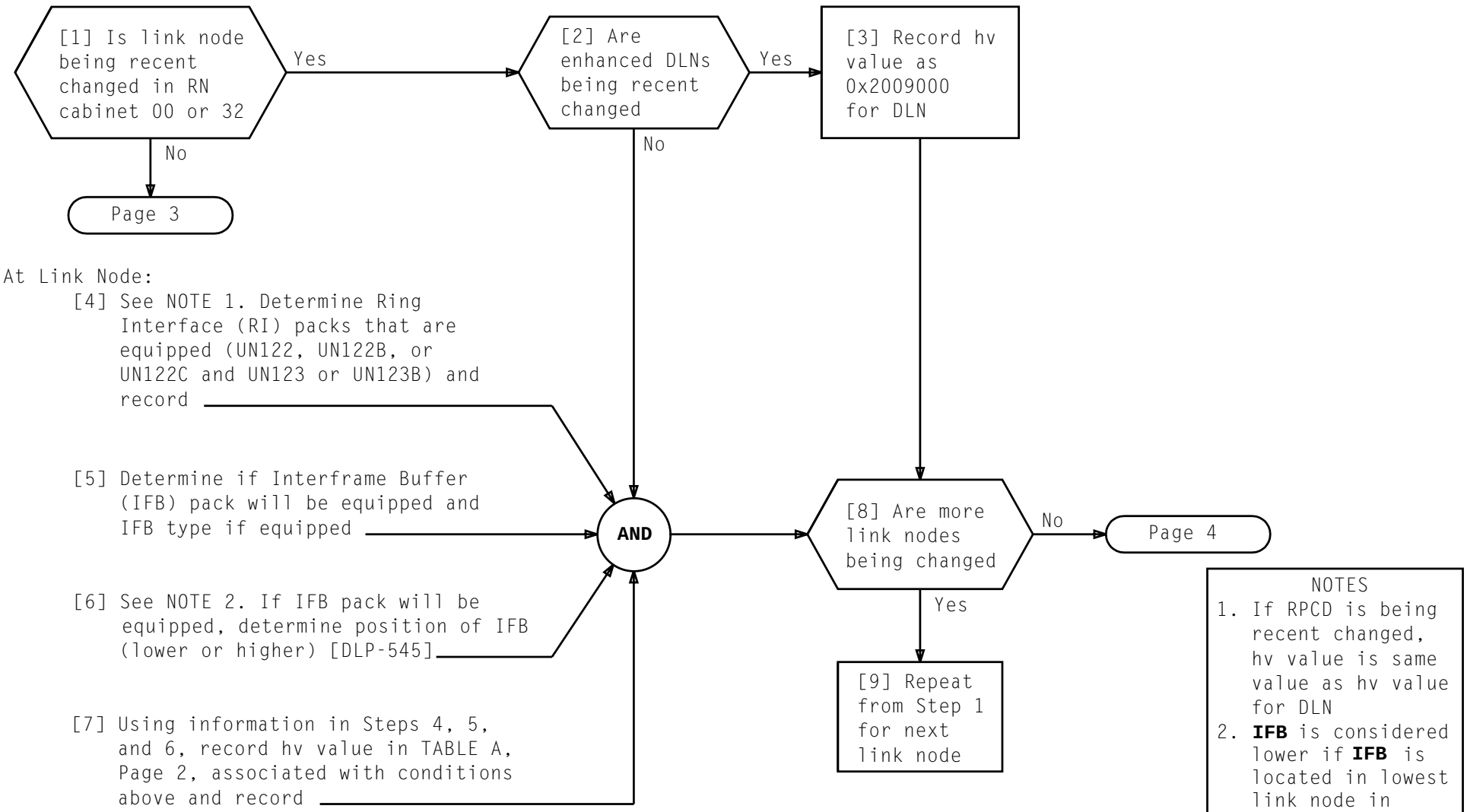

NOTES

1. If RPCD is being recent changed, hv value is same value as hv value for DLN
2. **IFB** is considered lower if **IFB** is located in lowest link node in cabinet. **IFB** is considered higher if **IFB** is located in highest link node in cabinet

RECENT CHANGE LINK NODE HV VALUE

TABLE A							
Ring Interface Pack(s)	IFB Type	IFB Position	HV Value	Ring Interface Pack(s)	IFB Type	IFB Position	HV Value
UN122/UN123	None	N/A	0x0100	UN303	None	N/A	0x8000
UN122/UN123	TN918	Higher	0x0110	UN303	TN918	Higher	0x8010
UN122/UN123	TN1508	Higher	0x0150	UN303	TN1508	Higher	0x8050
UN122/UN123	TN1803	Higher	0x0160	UN303	TN1803	Higher	0x8060
UN122/UN123	TN918	Lower	0x0101	UN303	TN918	Lower	0x8001
UN122/UN123	TN1508	Lower	0x0105	UN303	TN1508	Lower	0x8005
UN122/UN123	TN1803	Lower	0x0106	UN303	TN1803	Lower	0x8006
UN122B/UN123B	None	N/A	0x0900	UN303B*	None	N/A	0x9000
UN122B/UN123B	TN918	Higher	0x0910	UN303B*	TN918	Higher	0x9010
UN122B/UN123B	TN1508	Higher	0x0950	UN303B*	TN1508	Higher	0x9050
UN122B/UN123B	TN1803	Higher	0x0960	UN303B*	TN1803	Higher	0x9060
UN122B/UN123B	TN918	Lower	0x0901	UN303B*	TN918	Lower	0x9001
UN122B/UN123B	TN1508	Lower	0x0905	UN303B*	TN1508	Lower	0x9005
UN122B/UN123B	TN1803	Lower	0x0906	UN303B*	TN1803	Lower	0x9006
UN122C/UN123B	None	N/A	0x1900	UN304*	None	N/A	0xc000
UN122C/UN123B	TN918	Higher	0x1910	UN304*	TN918	Higher	0xc010
UN122C/UN123B	TN1508	Higher	0x1950	UN304*	TN1508	Higher	0xc050
UN122C/UN123B	TN1803	Higher	0x1960	UN304*	TN1803	Higher	0xc060
UN122C/UN123B	TN918	Lower	0x1901	UN304*	TN918	Lower	0xc001
UN122C/UN123B	TN1508	Lower	0x1905	UN304*	TN1508	Lower	0xc005
UN122C/UN123B	TN1803	Lower	0x1906	UN304*	TN1803	Lower	0xc006
				UN397	None	N/A	0x4000
				UN397	TN918	Higher	0x4010
				UN397	TN1508	Higher	0x4050
				UN397	TN1803	Higher	0x4060
				UN397	TN918	Lower	0x4001
				UN397	TN1508	Lower	0x4005
				UN397	TN1803	Lower	0x4006

TABLE A (Contd)			
Ring Interface Pack(s)†	IFB Type	IFB Position	HV Value‡
UN303B	None	N/A	0x200 9000
UN303B	TN918	Higher	0x200 9010
UN303B	TN1508	Higher	0x200 9050
UN303B	TN1803	Higher	0x200 9060
UN303B	TN918	Lower	0x200 9001
UN303B	TN1508	Lower	0x200 9005
UN303B	TN1803	Lower	0x200 9006
UN304	None	N/A	0x200 c000
UN304	TN918	Higher	0x200 c010
UN304	TN1508	Higher	0x200 c050
UN304	TN1803	Higher	0x200 c060
UN304	TN918	Lower	0x200 c001
UN304	TN1508	Lower	0x200 c005
UN304	TN1803	Lower	0x200 c006

* If, Node is Non-DLN, use this pack

† If, Node is DLN, use these packs

‡ HV Value for DLN's is used on both LN and RPCD UCB forms

RECENT CHANGE LINK NODE HV VALUE

At Link Node:

[10] Determine Integrated Ring Node (IRN) pack that is equipped (UN303 or UN303B) and record

[11] Determine if Interframe Buffer (IFB) pack will be equipped and IFB type if equipped

[12] If IFB pack will be equipped, determine position of IFB (lower or higher) [DLP-545]

[13] Using information in Steps 10, 11, and 12, record hv value in TABLE A, Page 2 associated with conditions above and record

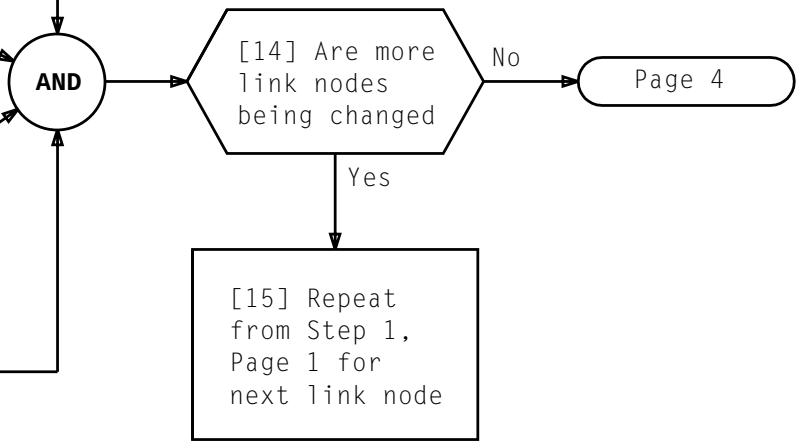

RECENT CHANGE LINK NODE HV VALUE

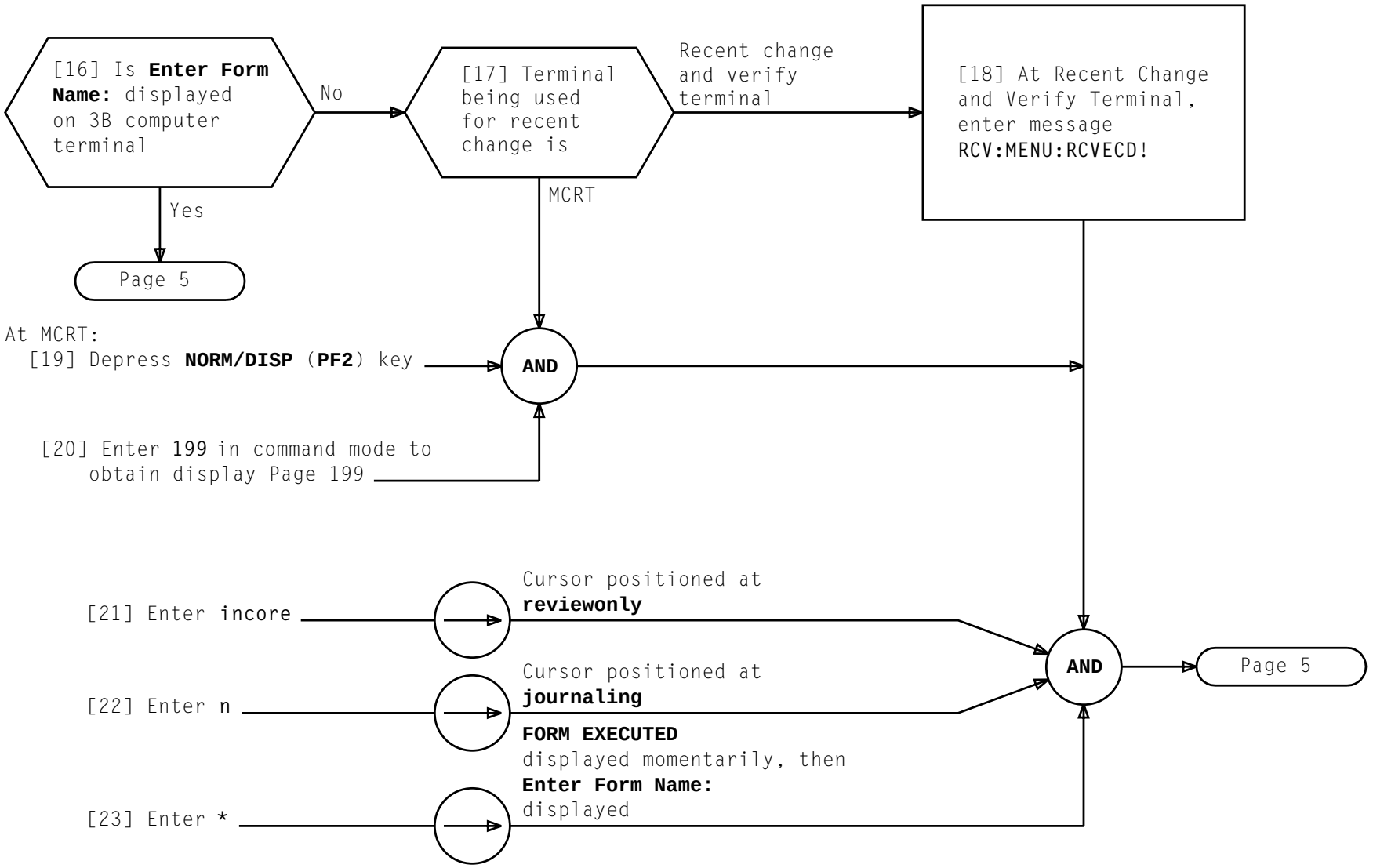

RECENT CHANGE LINK NODE HV VALUE

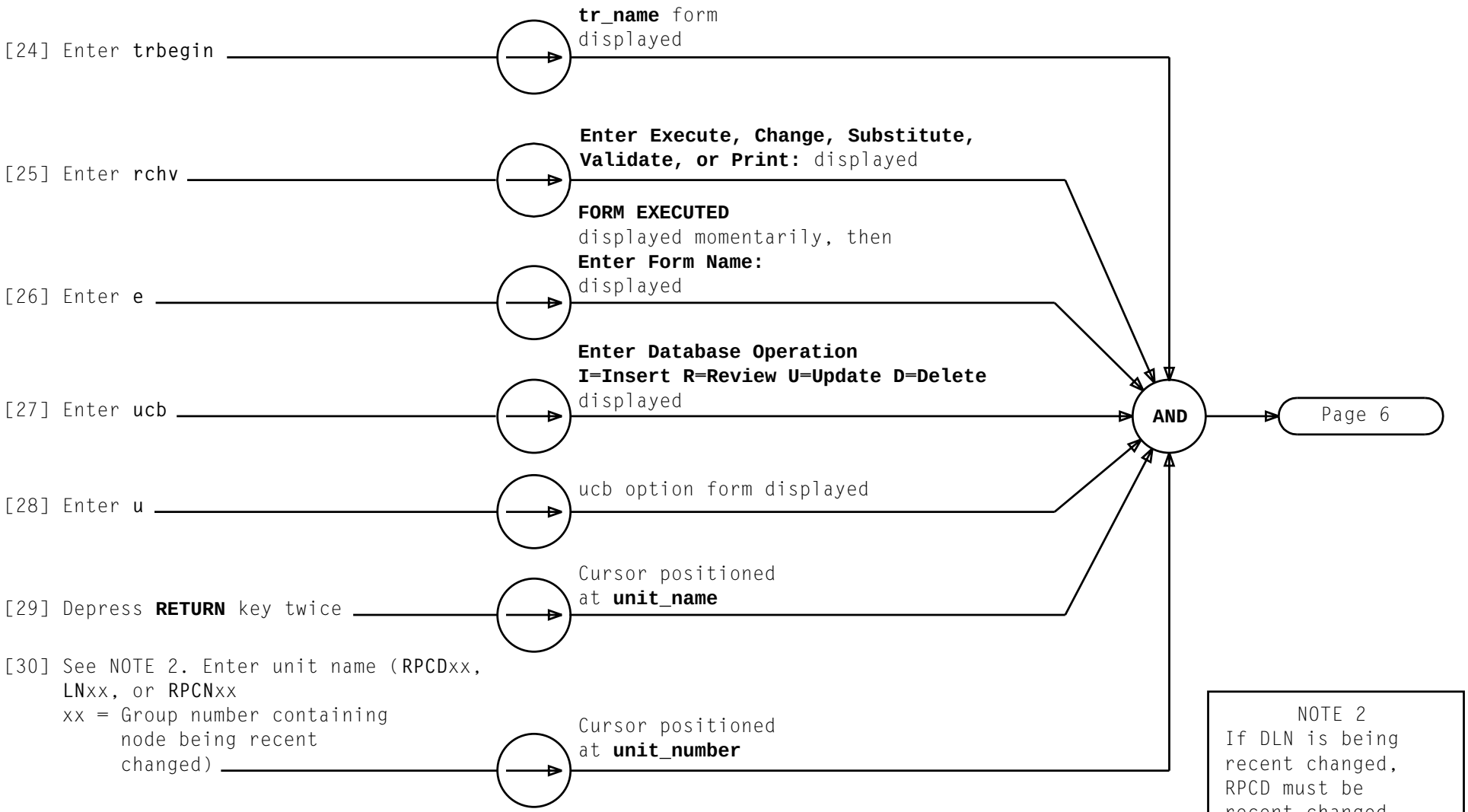

NOTE 2
If DLN is being recent changed, RPCD must be recent changed before DLN. **trend** is required between recent changes

Issue 6	**SEP 1998**
234-153-055	**DLP**
PAGE 5 of 8	**527**

RECENT CHANGE LINK NODE HV VALUE

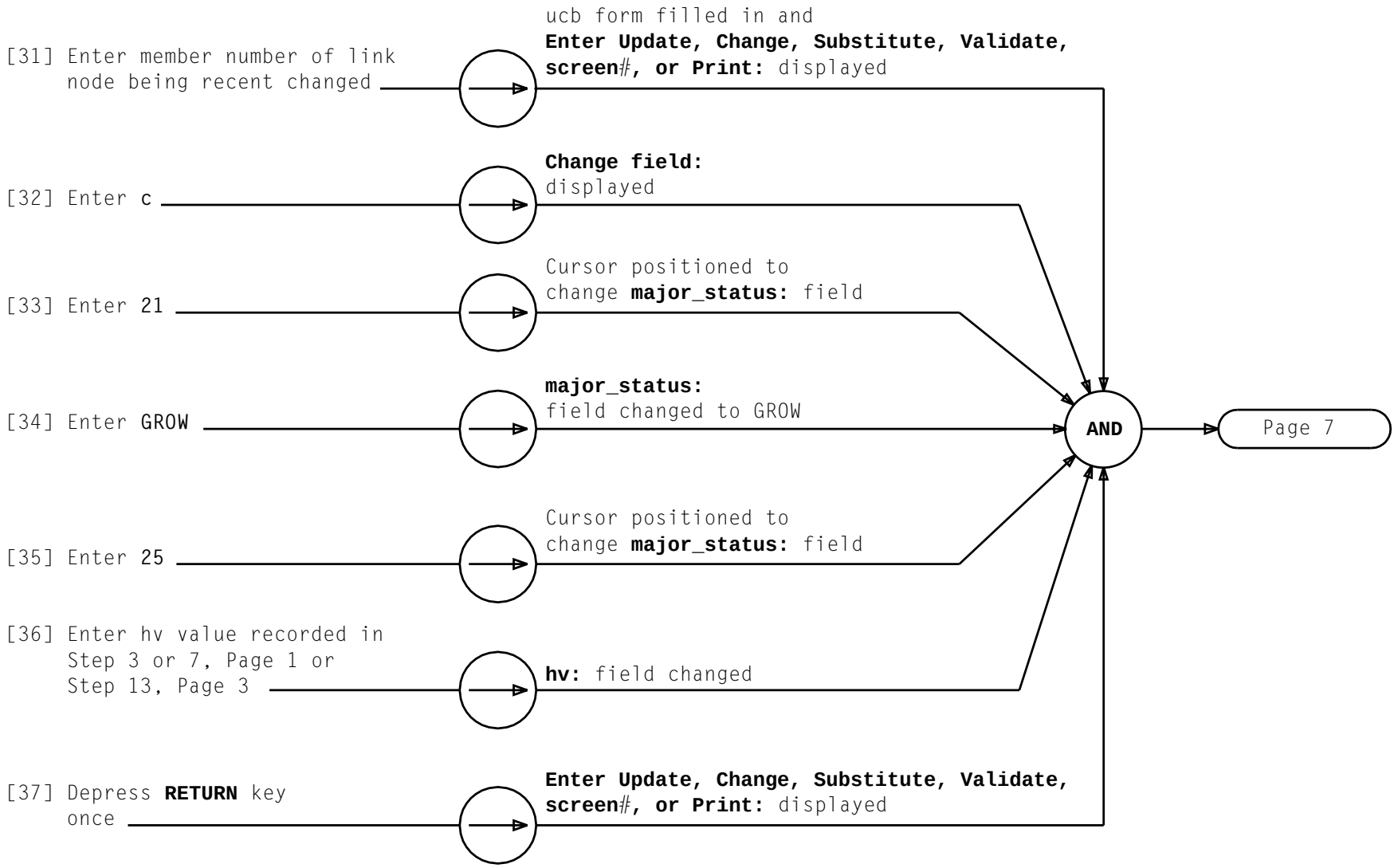

RECENT CHANGE LINK NODE HV VALUE

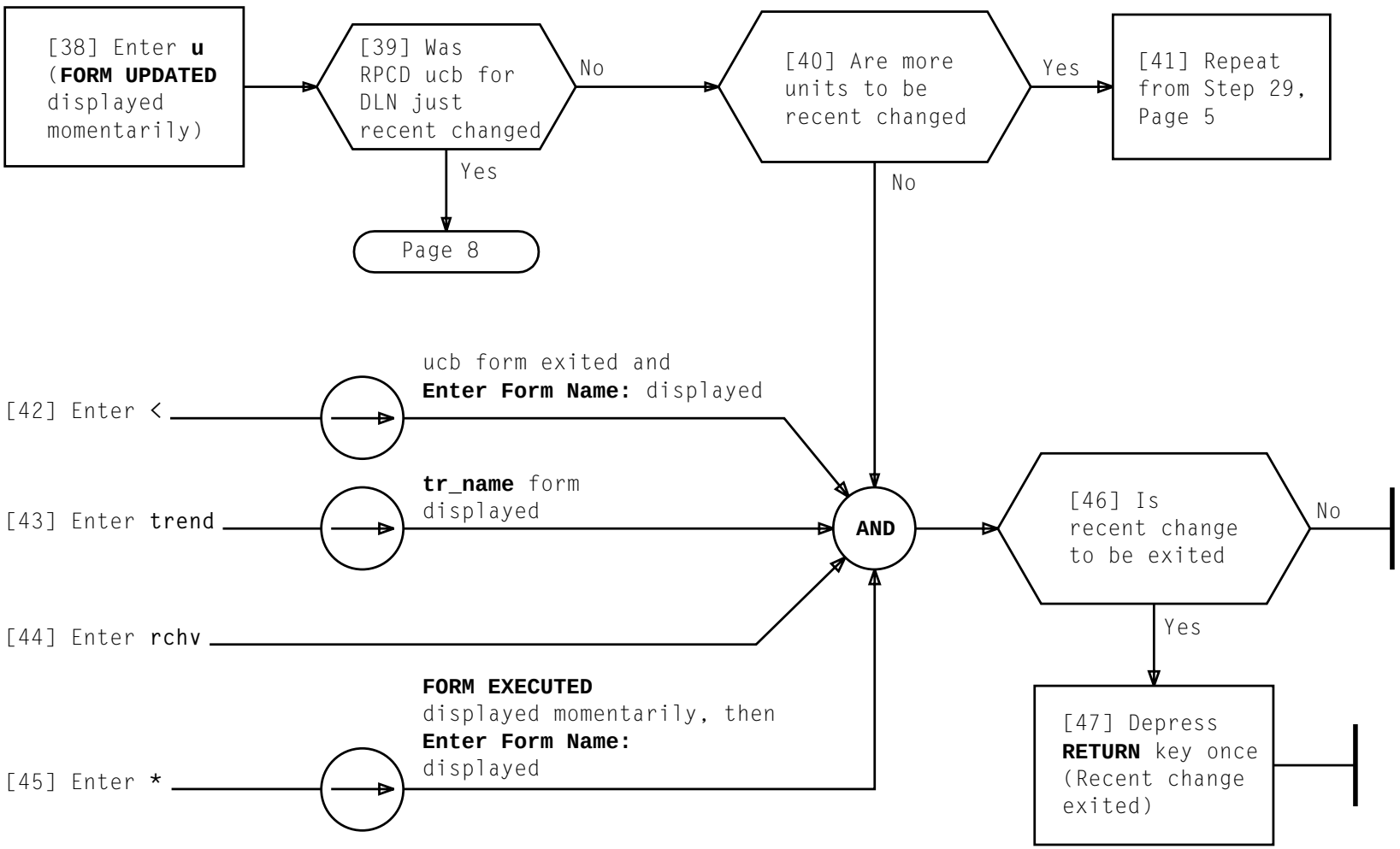

RECENT CHANGE LINK NODE HV VALUE

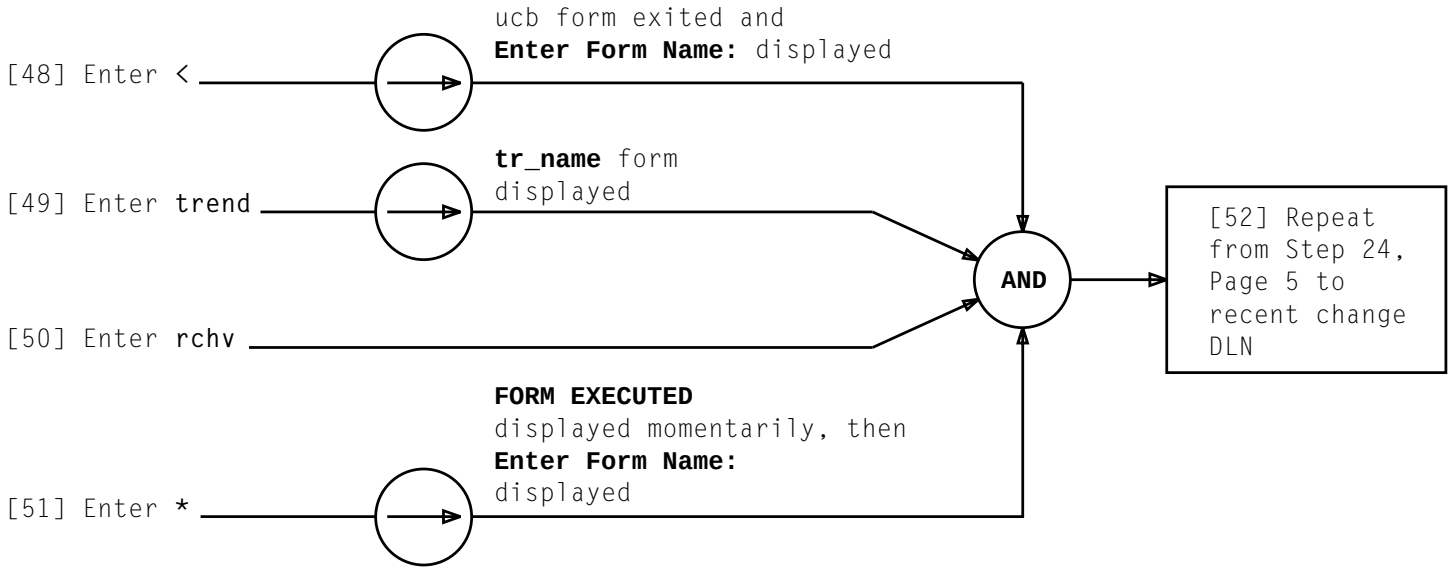

RECENT CHANGE LINK NODE HV VALUE

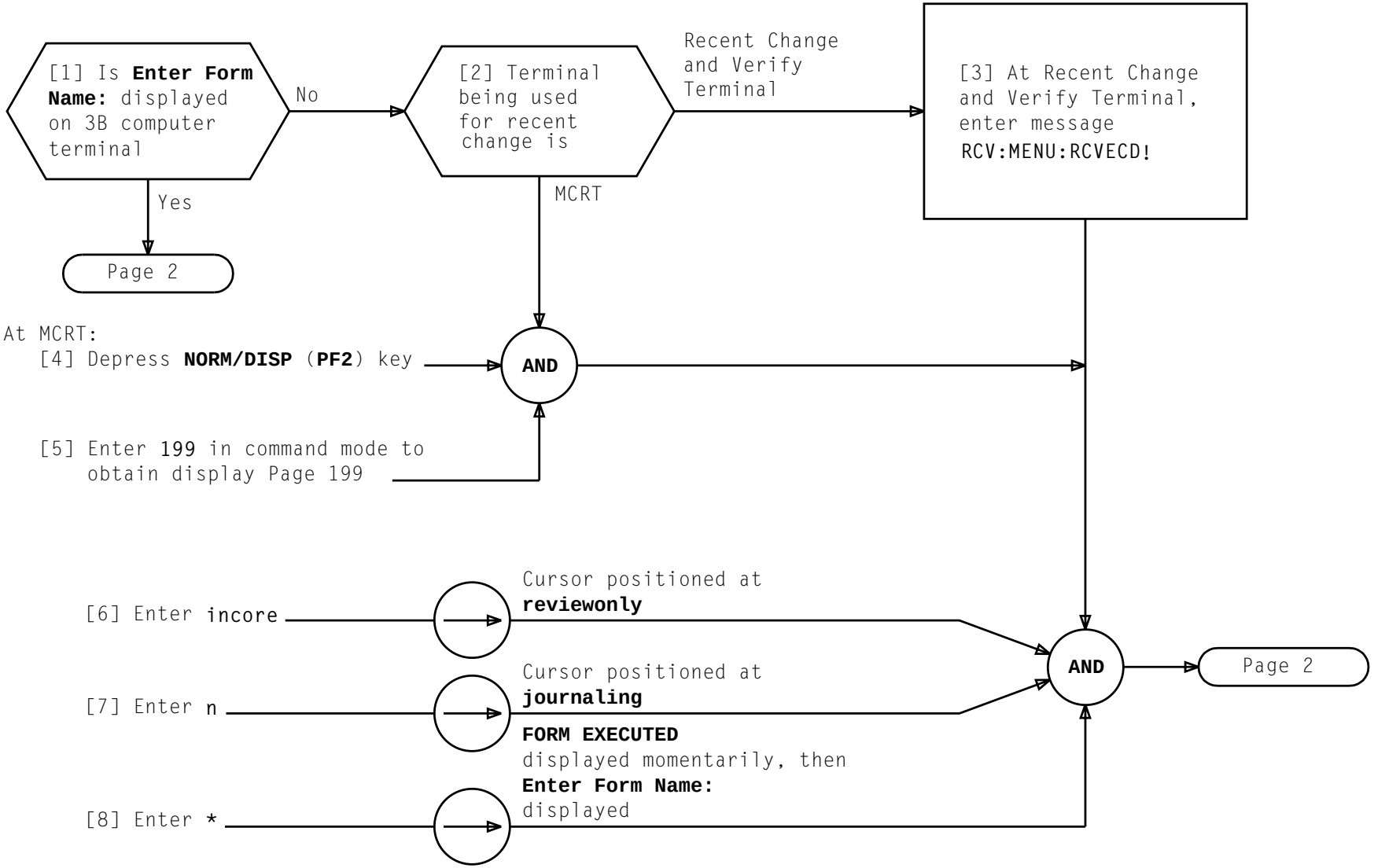

RECENT CHANGE GROWTH ASSOCIATED LINK NODE TO OOS

Issue 6	SEP 1998
234-153-055	DLP
PAGE 1 of 4	528

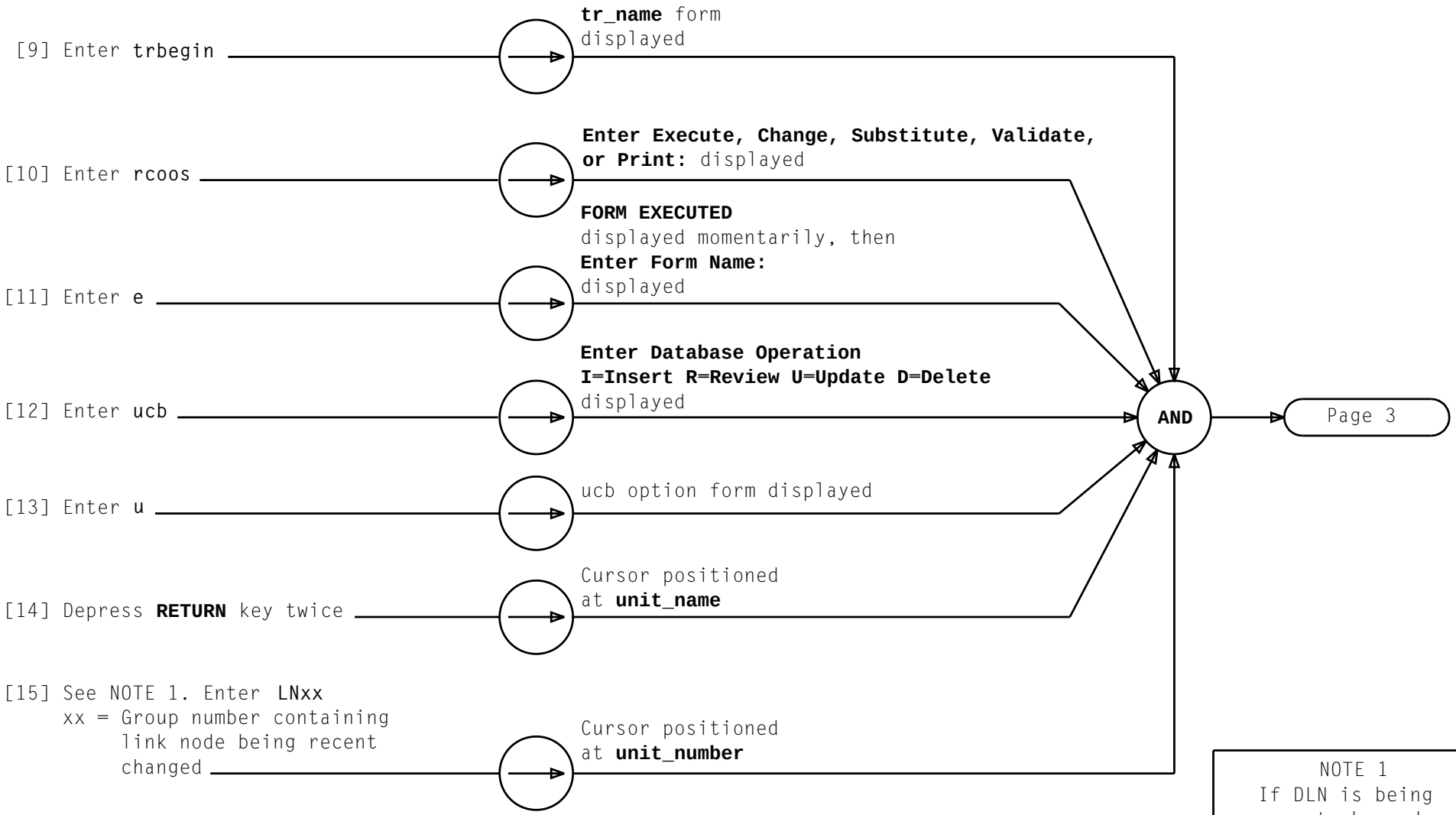

NOTE 1
If DLN is being recent changed, RPCD is not required to be recent changed to OOS

RECENT CHANGE GROWTH ASSOCIATED LINK NODE TO OOS

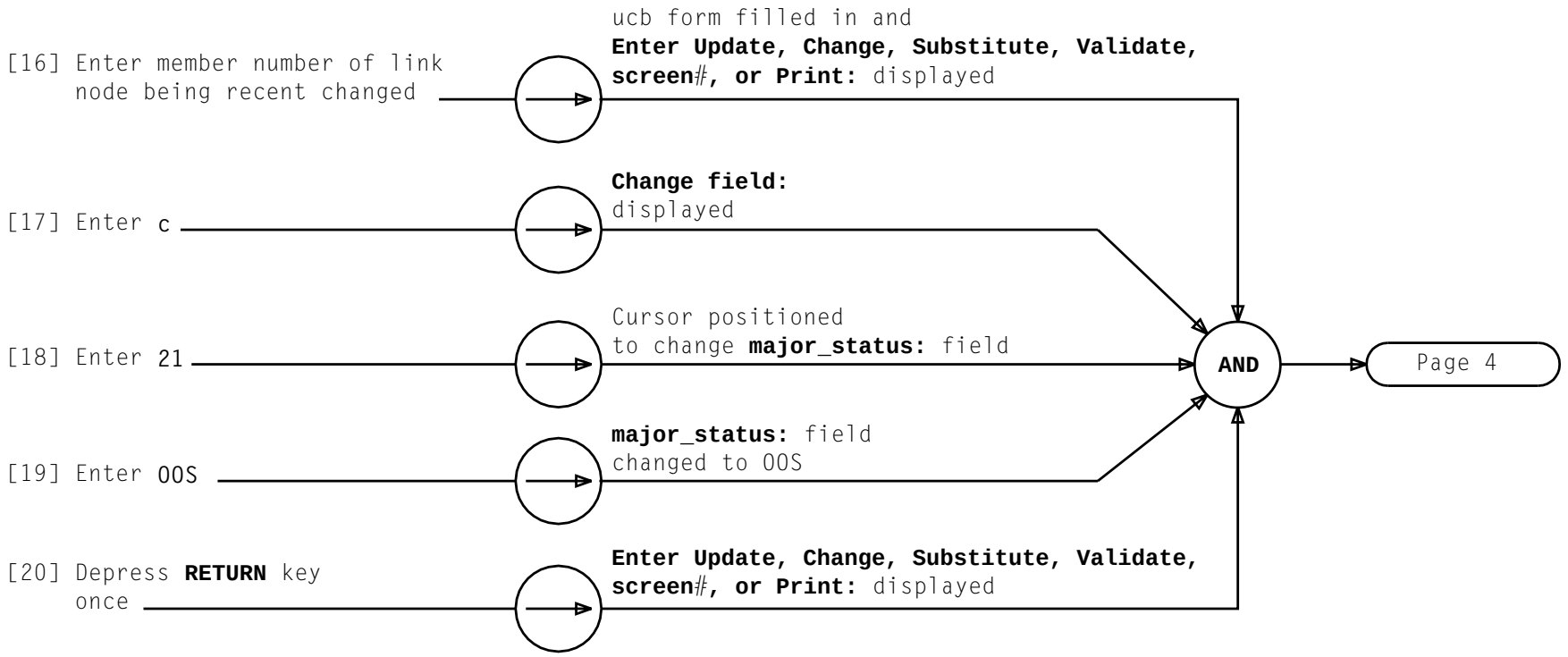

RECENT CHANGE GROWTH ASSOCIATED LINK NODE TO OOS

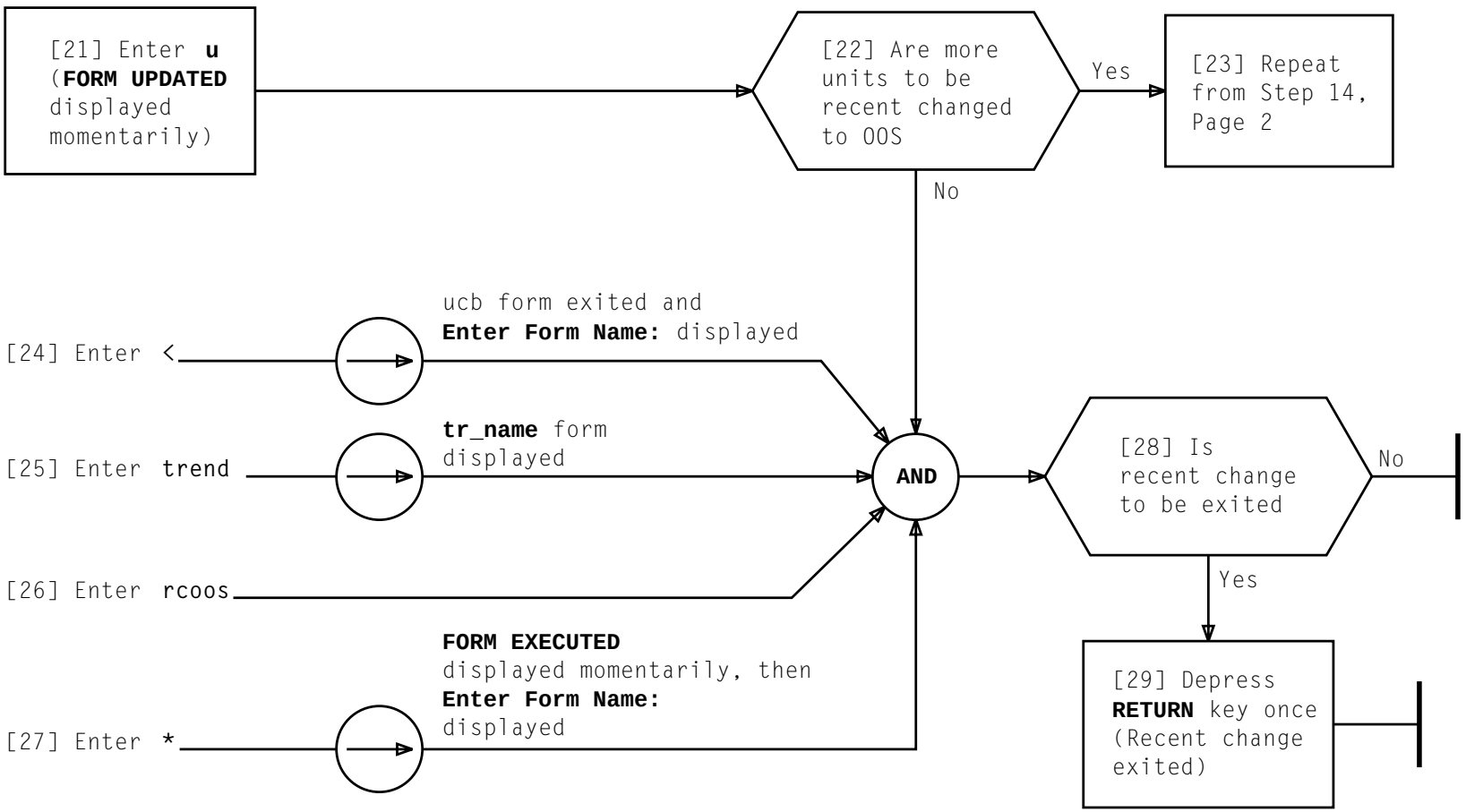

RECENT CHANGE GROWTH ASSOCIATED LINK NODE TO OOS

CHANGE SIGNALING LINK(S) TO AVAILABLE IN SERVICE

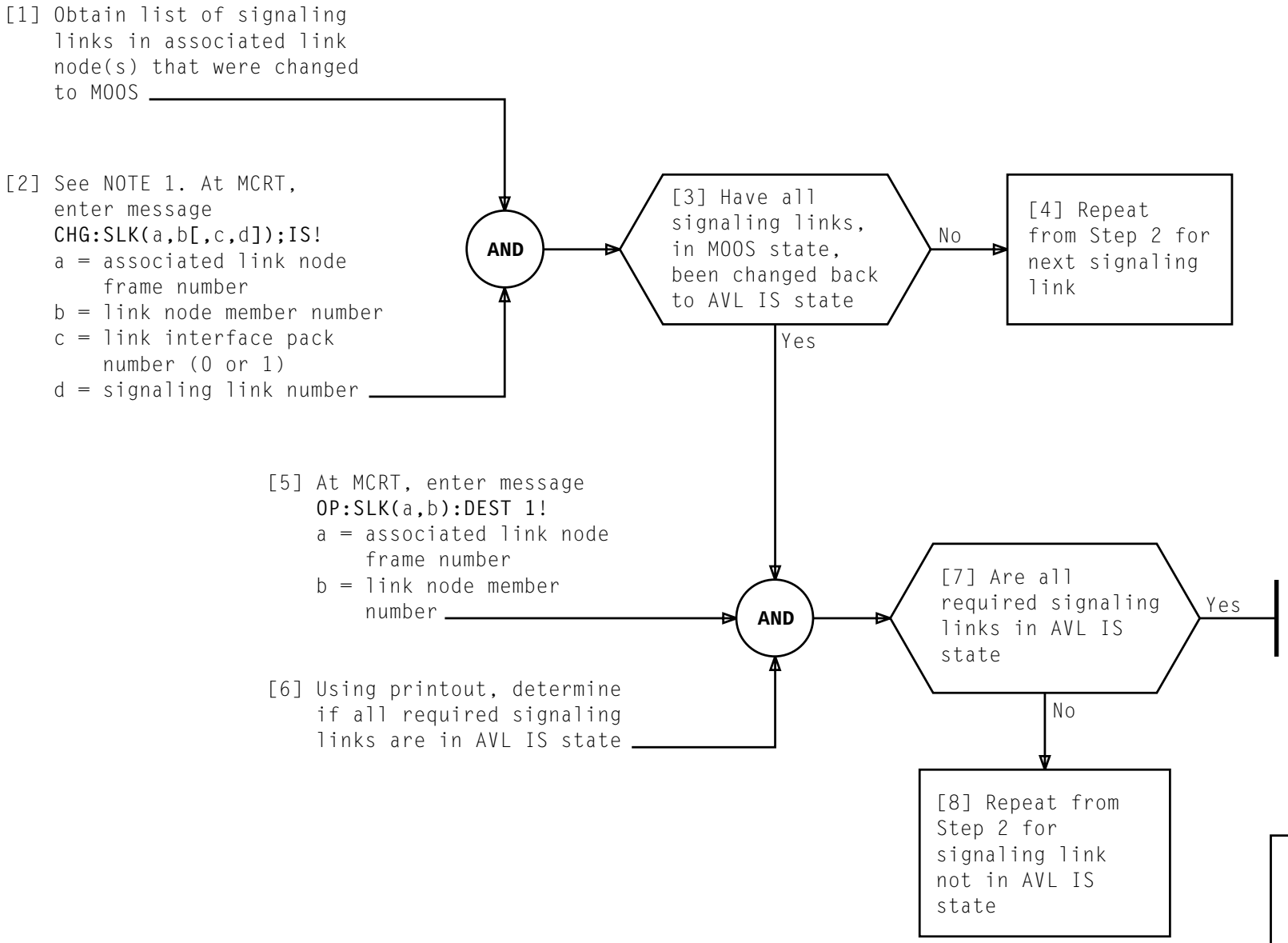

NOTE 1
If changing CCS7 link: **,c** and **,d** in input message are not required

Issue 6	**SEP 1998**
234-153-055	**DLP**
PAGE 1 of 1	**529**

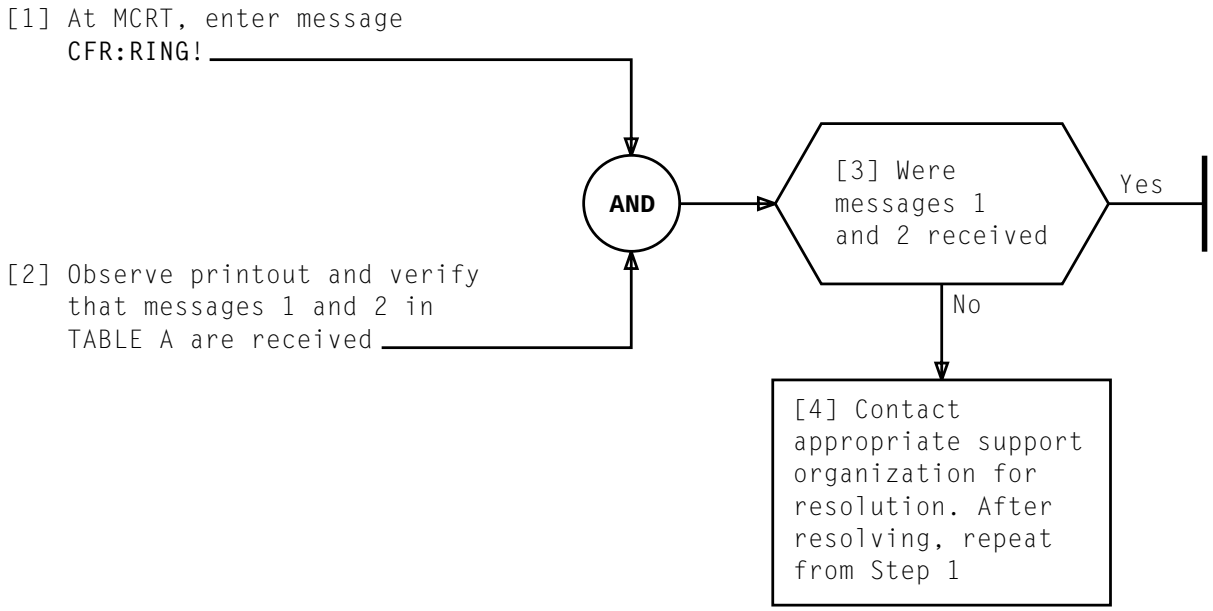

TABLE A

MESSAGE NUMBER	OUTPUT MESSAGE
1	RING REPT RING CFR RING CONFIGURATION ESTABLISHED (nnn ms) NORMAL CONFIGURATION, NO NODES ISOLATED
2	RING CFR RING COMPL

ESTABLISH RING CONFIGURATION

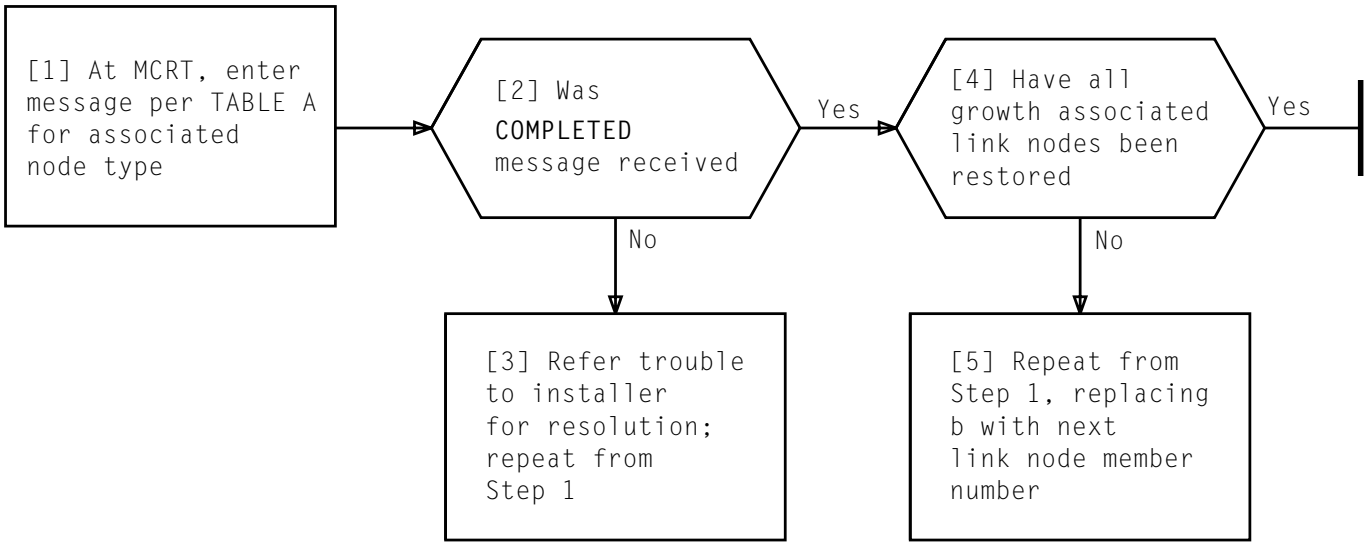

TABLE A

NODE TYPE	INPUT MESSAGE
LN	RST:LNaa b;UCL!
RPCN	RST:RPCNaa b;UCL!

aa = Cabinet number
b = Node member number

RESTORE LINK NODE(S) UNCONDITIONALLY

DETERMINE AVAILABLE SIGNALING LINK(S)

[1] Determine equipped link nodes that are same type as growth signaling link(s)

[2] At one link node determined in Step 1, determine equipped link interface pack(s)

[3] At MCRT, enter message OP:SLK(a,b):DEST 1!
a = associated link node frame number
b = link node member number

[4] Using printout and FIG. 1, determine if any signaling links are listed as UNEQUIPPED

AND

[5] Were any signaling links listed UNEQUIPPED for this link node

Yes → Page 2

No

[6] Have all equipped link nodes of same type been checked for available signaling links

Yes → [8] No signaling links are available

No

[7] Repeat from Step 2 for next link node of same type as growth signaling link

```
RING OP SLK 0 9 IN PROG

SLK 00 09 DCHN 00 00 AVL IS
SLK 00 09 DCHN 00 01 AVL IS
SLK 00 09 DCHN 00 02 THRU 01 03 UNEQUIPPED

RING OP SLK 0 9 COMPL
```

FIG. 1 — Sample OP:SLK Printout

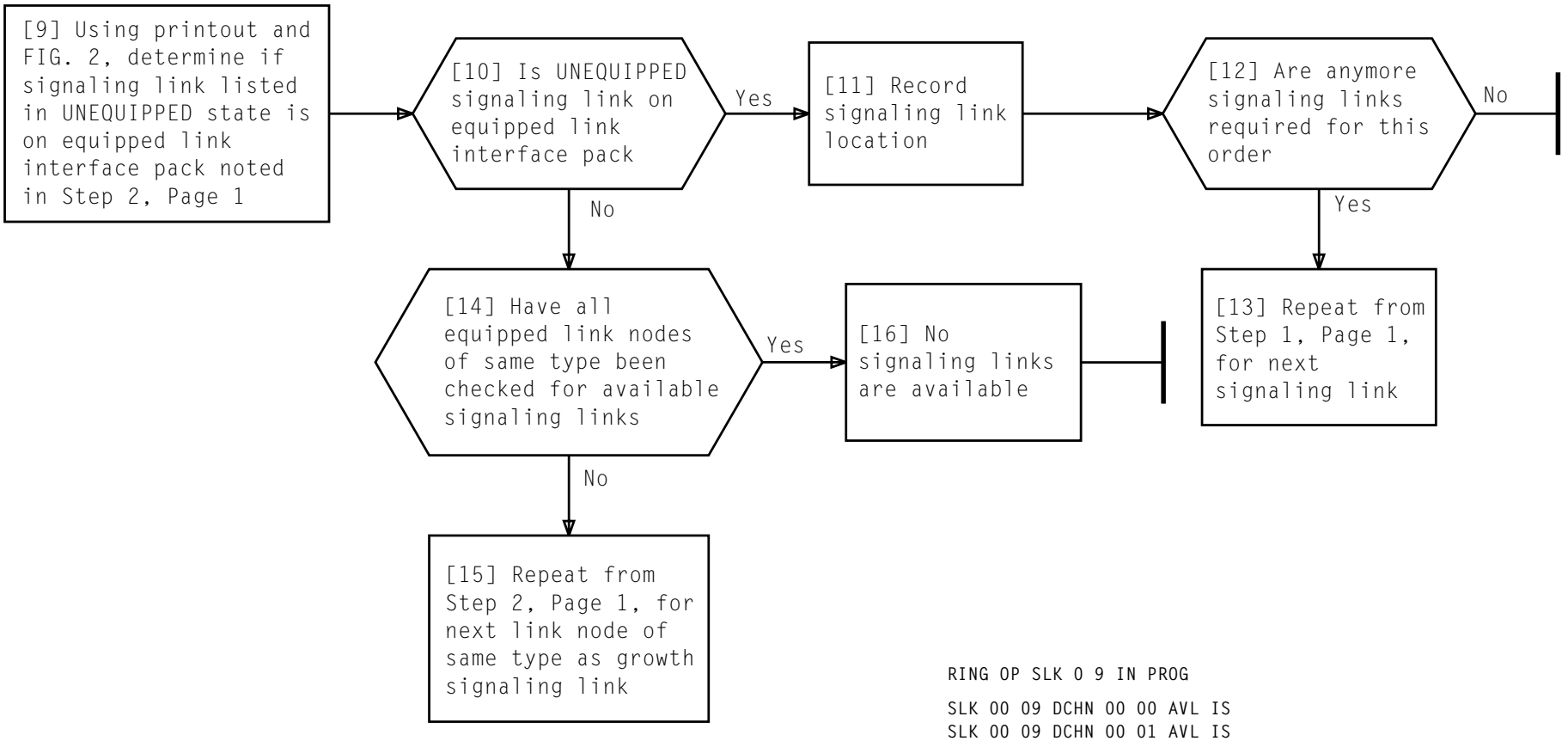


```
RING OP SLK 0 9 IN PROG

SLK 00 09 DCHN 00 00 AVL IS
SLK 00 09 DCHN 00 01 AVL IS
SLK 00 09 DCHN 00 02 THRU 01 03 UNEQUIPPED

RING OP SLK 0 9 COMPL
```

Link Interface Pack Numbers

FIG. 2 – Sample OP:SLK Printout

DETERMINE AVAILABLE SIGNALING LINK(S)

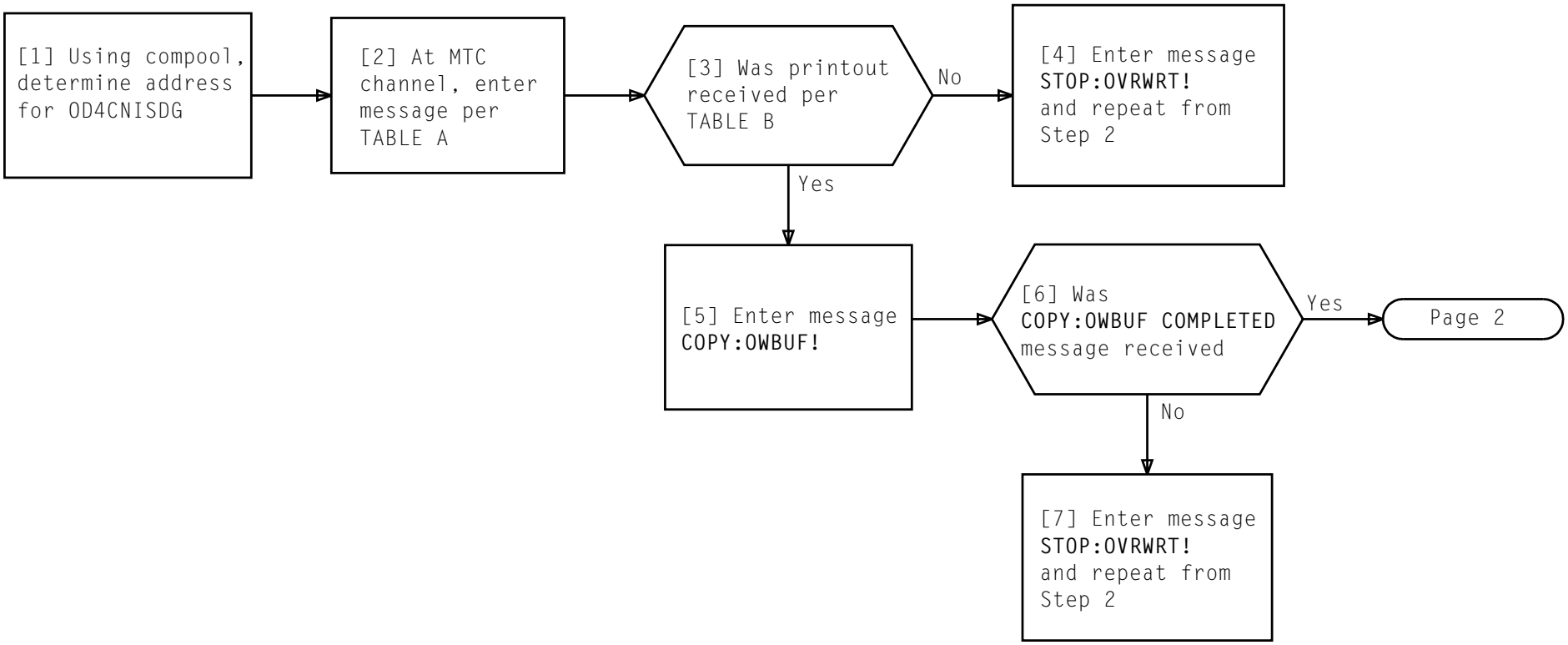

TABLE A	
MESSAGE NUMBER	**INPUT MESSAGE**
1	IN:OWBUF:ADR a,DATA 1,OLDDATA 0!
a = Address determined in Step 1	

TABLE B	
MESSAGE NUMBER	**OUTPUT MESSAGE**
1	IN:OWBUF CORE ADR OLD DATA NEW DATA a 00000000 00000001

TURN ON SERVICE-DEGRADING REPORT FOR CNI RING

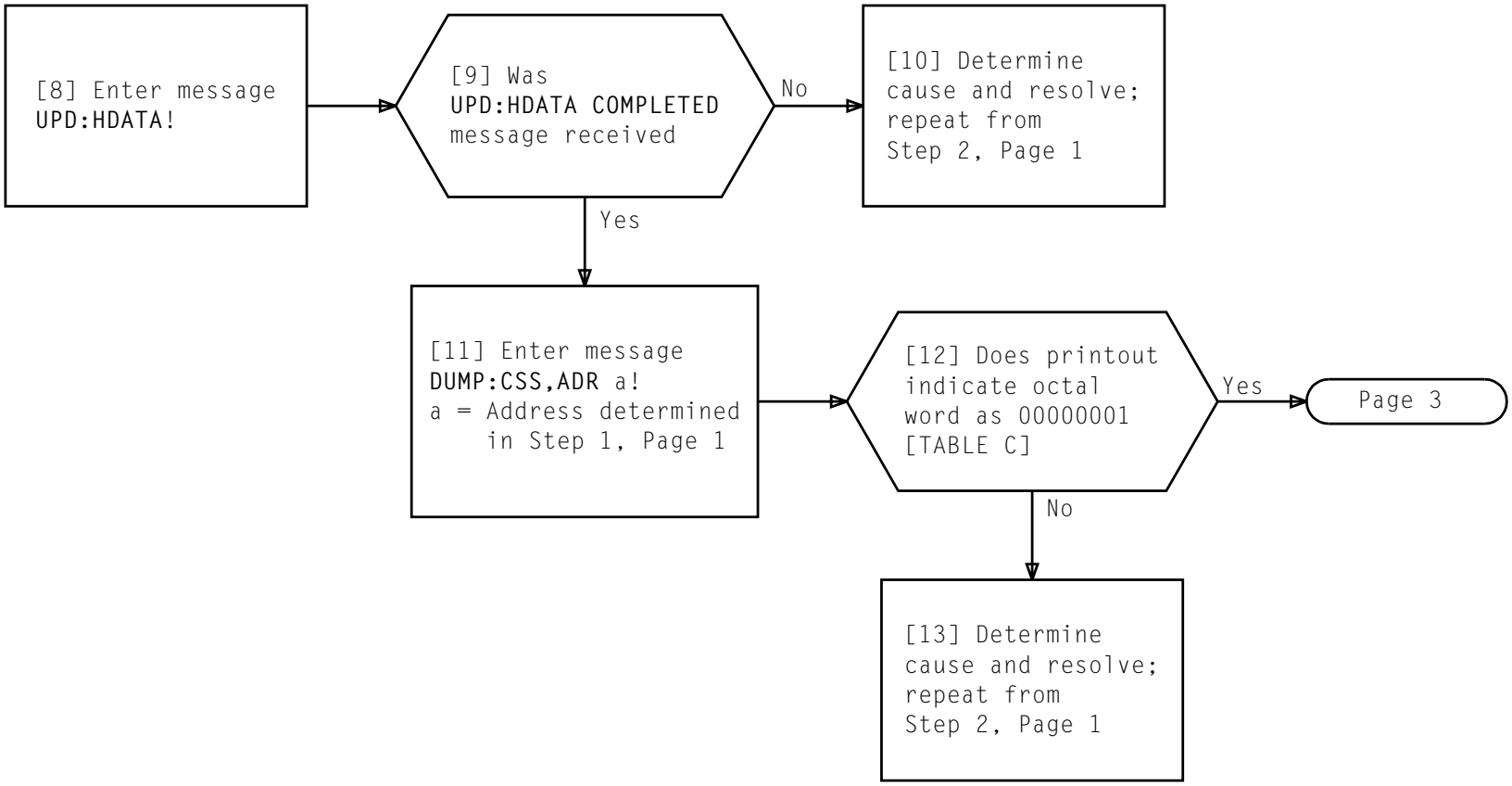

TABLE C

MESSAGE NUMBER	OUTPUT MESSAGE
1	DUMP:CSS,INDIR 0,ADR a,INC +0 COMPLETED a 00000001

TURN ON SERVICE-DEGRADING REPORT FOR CNI RING

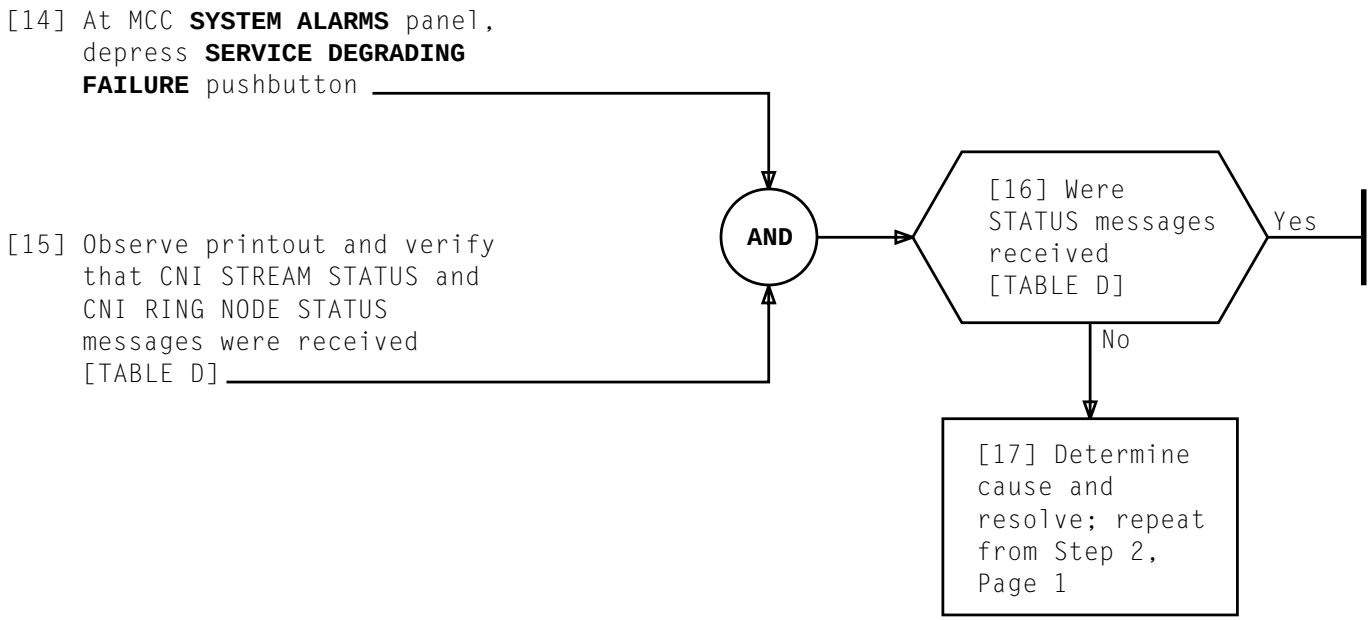

TABLE D

MESSAGE NUMBER	OUTPUT MESSAGE
1	OP:SDC (APS SERVICE DEGRADING CONDITION) ****** CNI STREAM STATUS ****** • • • ****** CNI RING NODE STATUS ****** • • •

TURN ON SERVICE-DEGRADING REPORT FOR CNI RING

CHANGE SIGNALING LINK(S) TO AVAILABLE

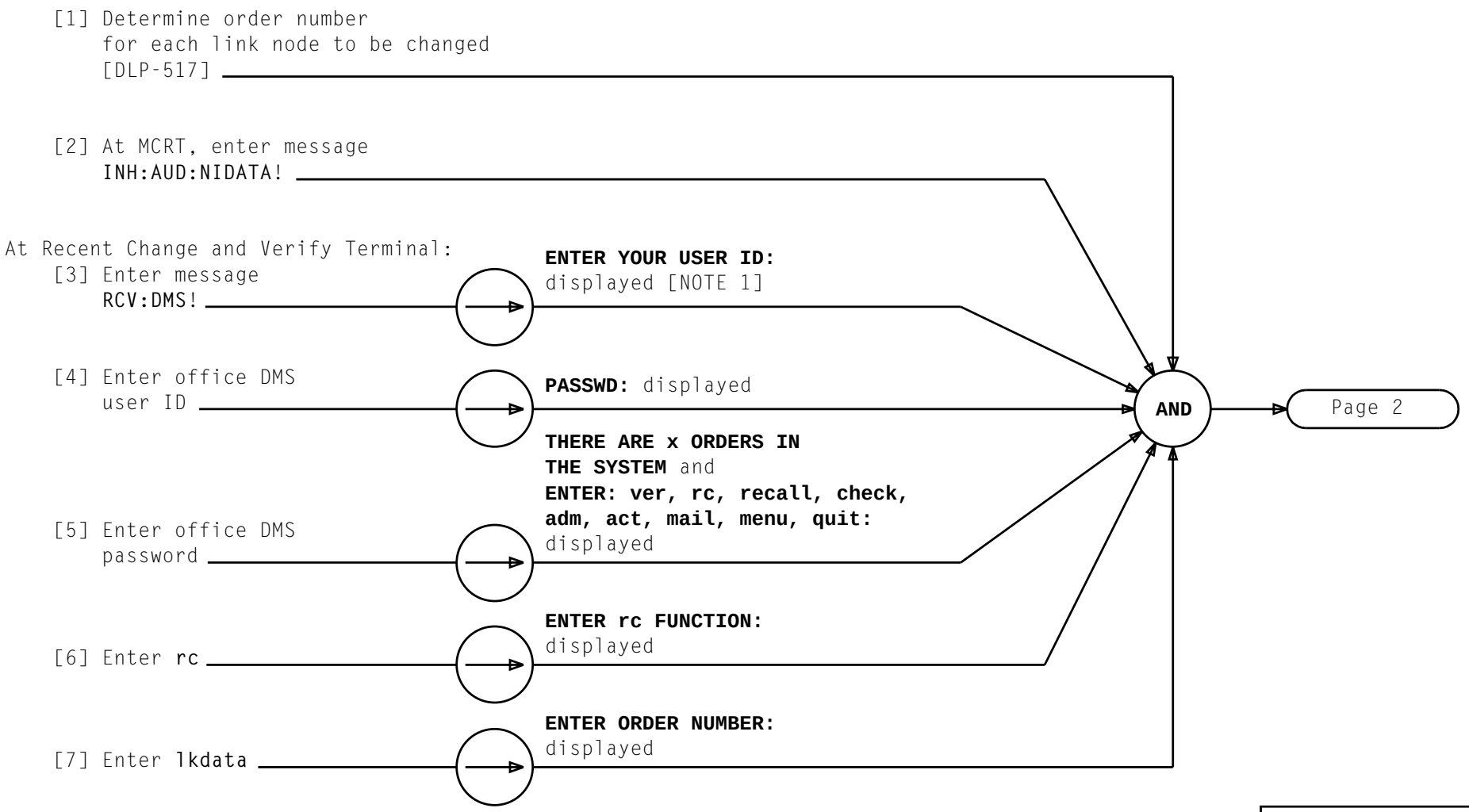

NOTE 1
If **ENTER YOUR USER ID:** is not received, **BREAK** key will have to be depressed

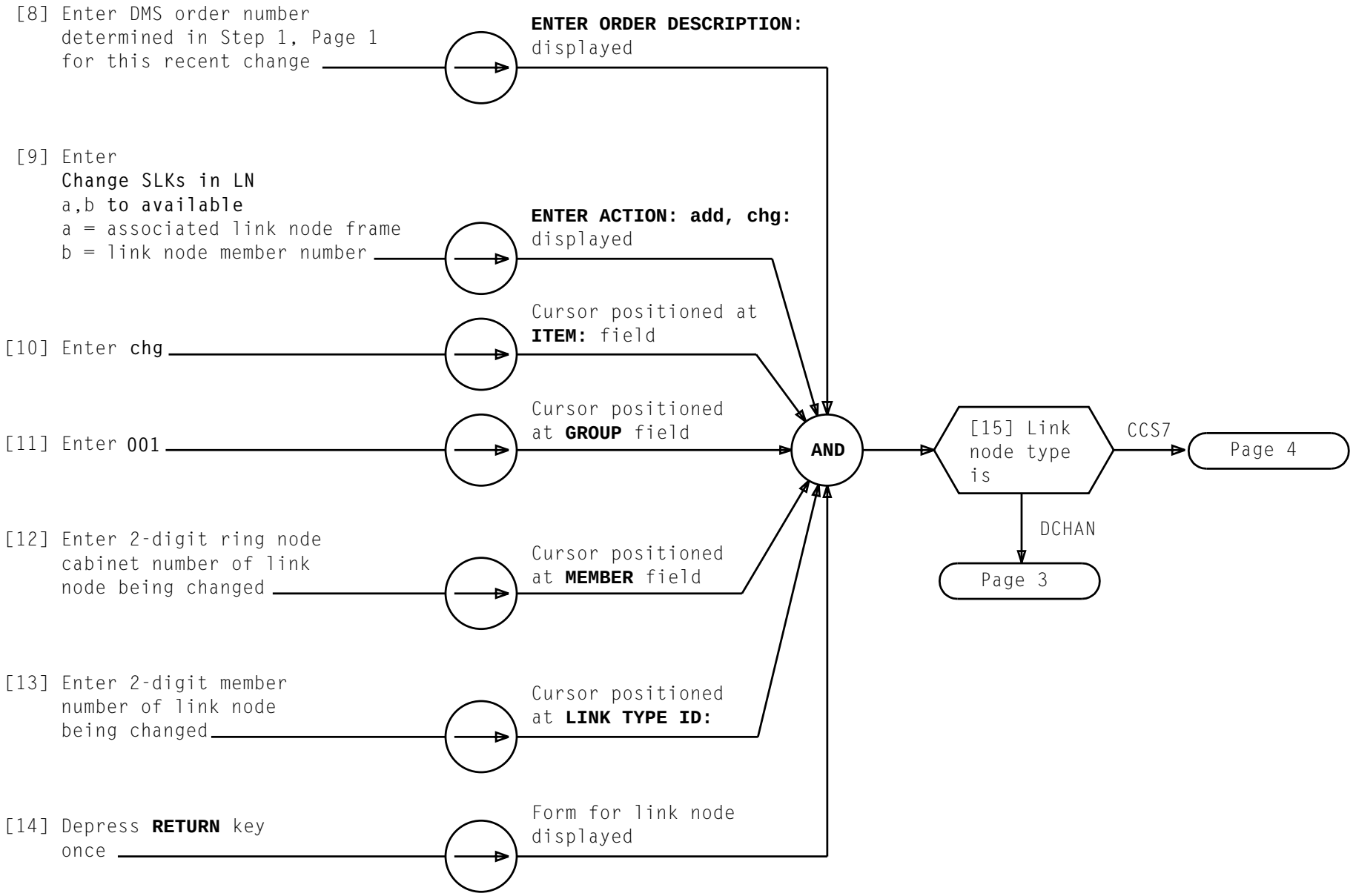

CHANGE SIGNALING LINK(S) TO AVAILABLE

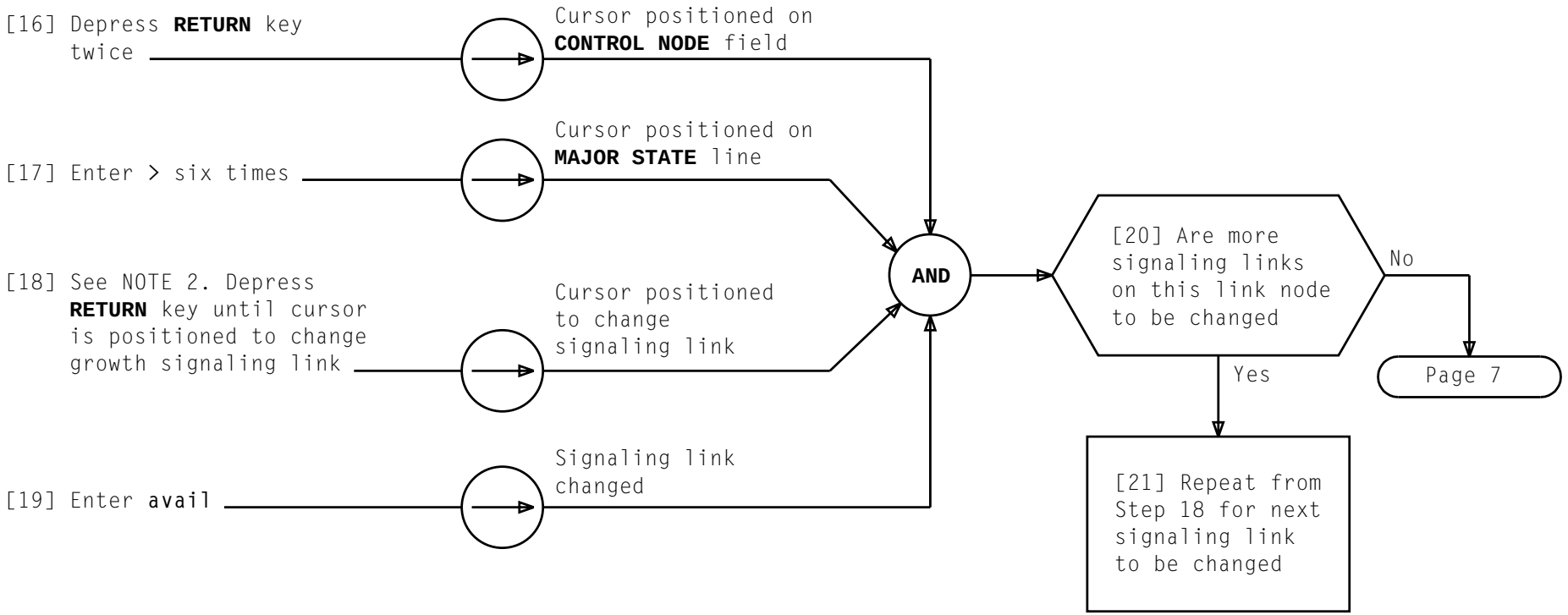

NOTE 2
li40 is for signaling links 0 through 3 on link interface pack 0, and li41 is for signaling links 0 through 3 on link interface pack 1

CHANGE SIGNALING LINK(S) TO AVAILABLE

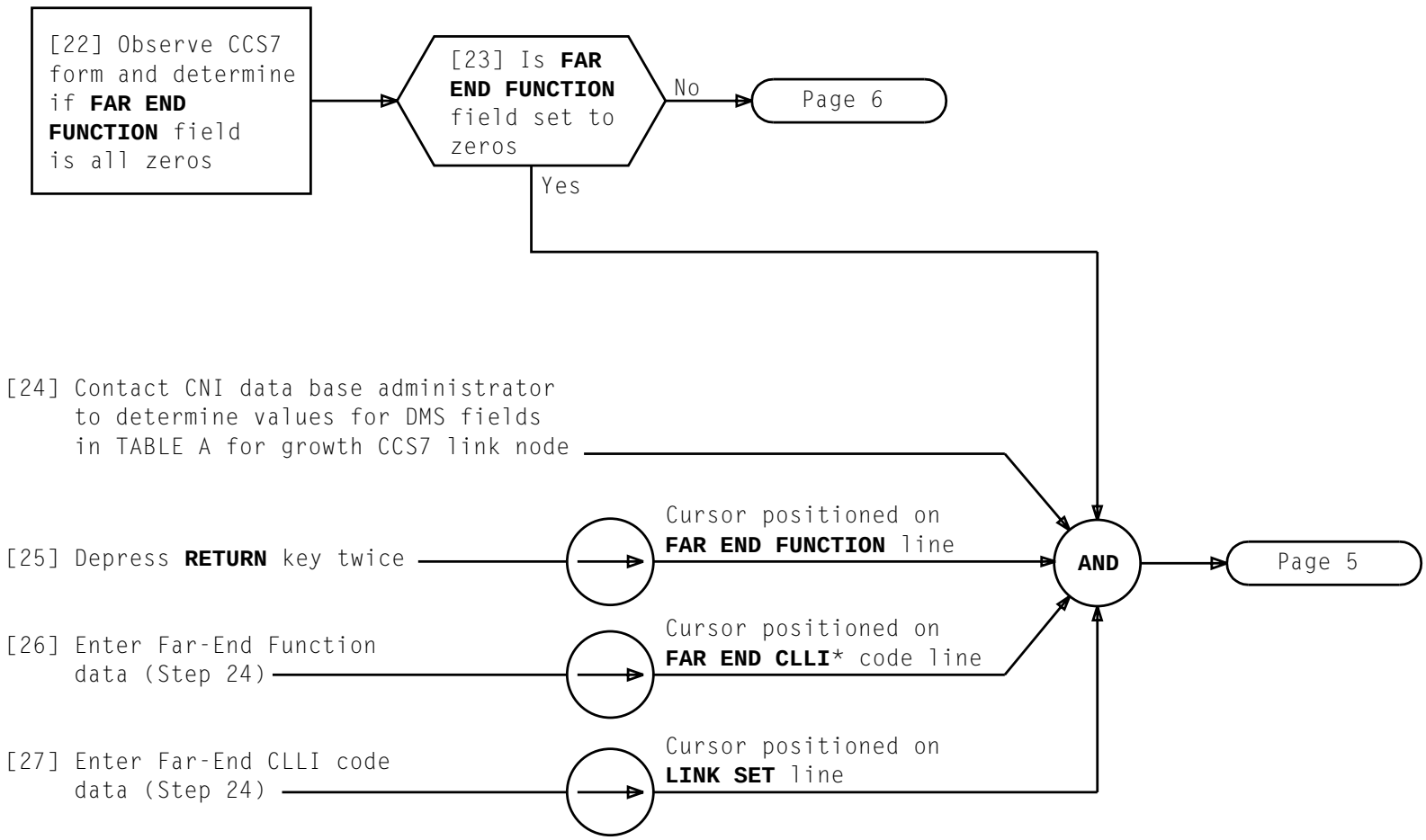

TABLE A
FAR END FUNCTION
FAR END CLLI code
LINK SET
SIGNALING LINK CODE
LINK TYPE
MATE GROUP — MEMBER
COMBINED LINK SET
FAR END POINT CODE

* COMMON LANGUAGE is a registered trademark and CLEI, CLLI, CLCI, and CLFI are trademarks of Bell Communications Research, Inc.

CHANGE SIGNALING LINK(S) TO AVAILABLE

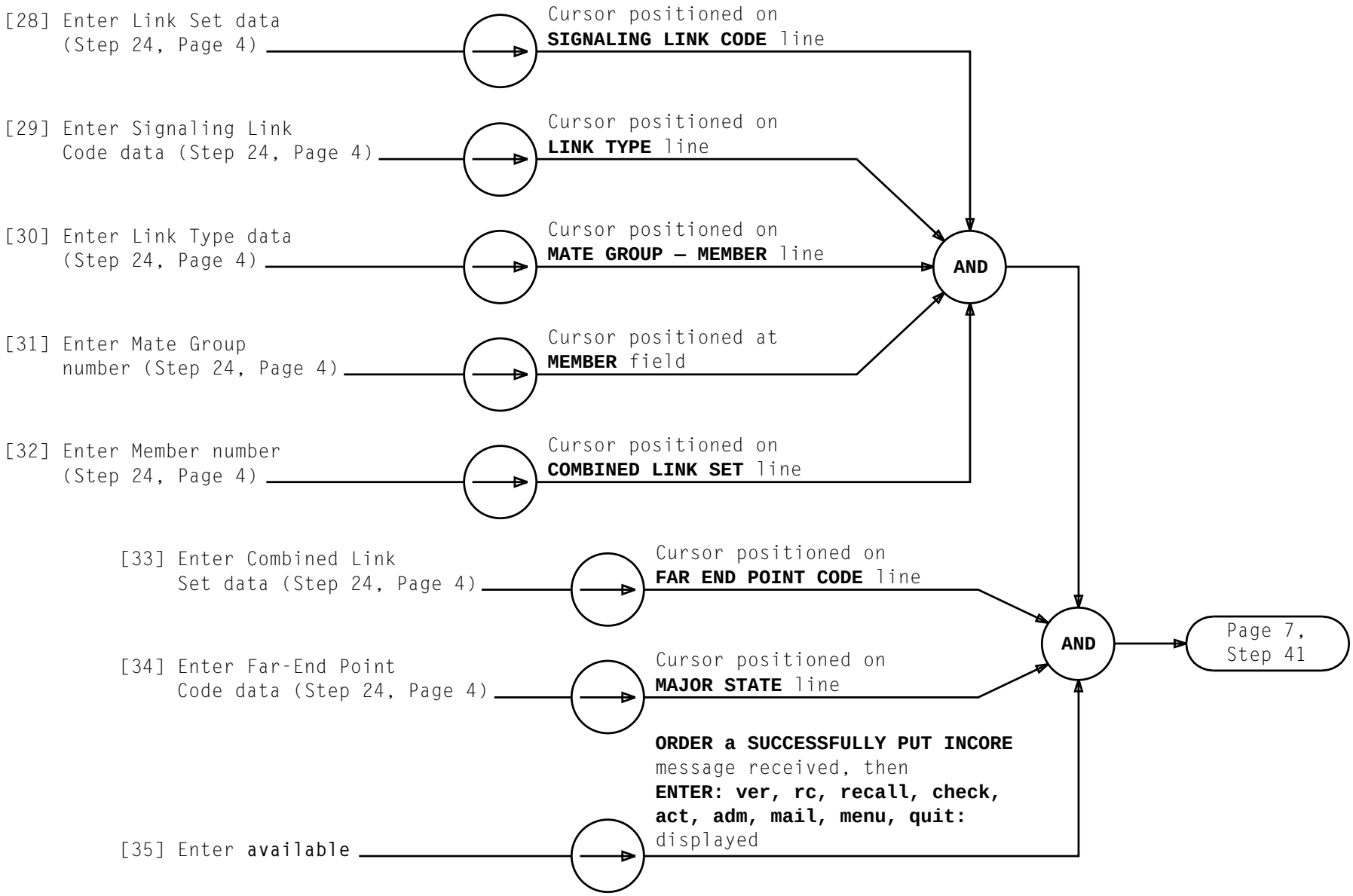

CHANGE SIGNALING LINK(S) TO AVAILABLE

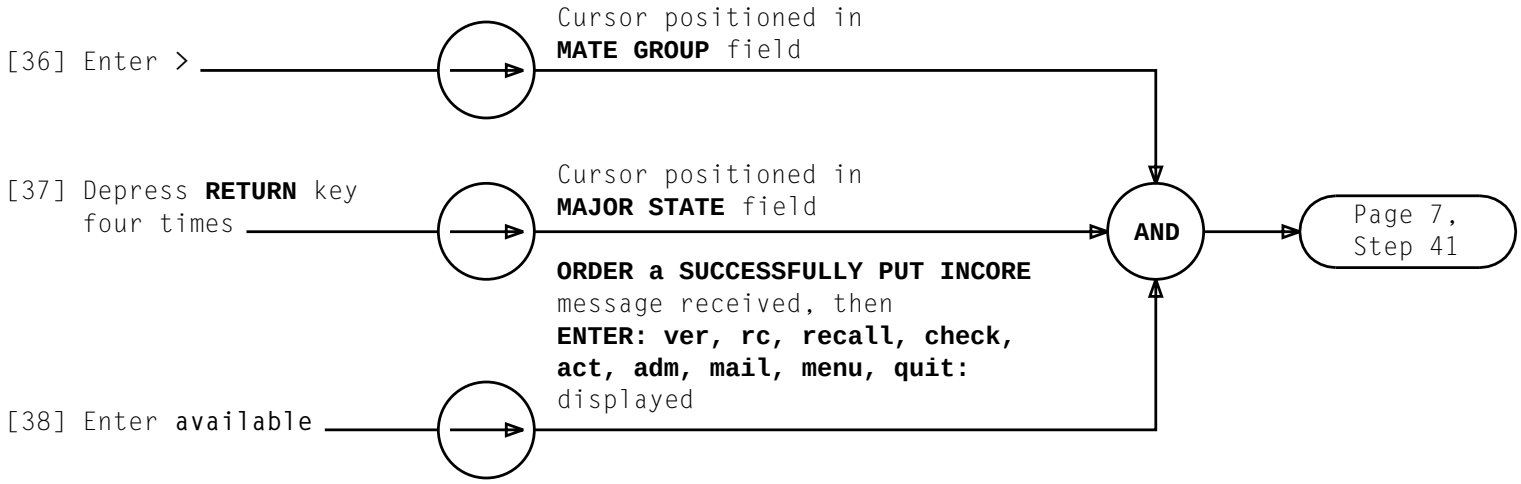

CHANGE SIGNALING LINK(S) TO AVAILABLE

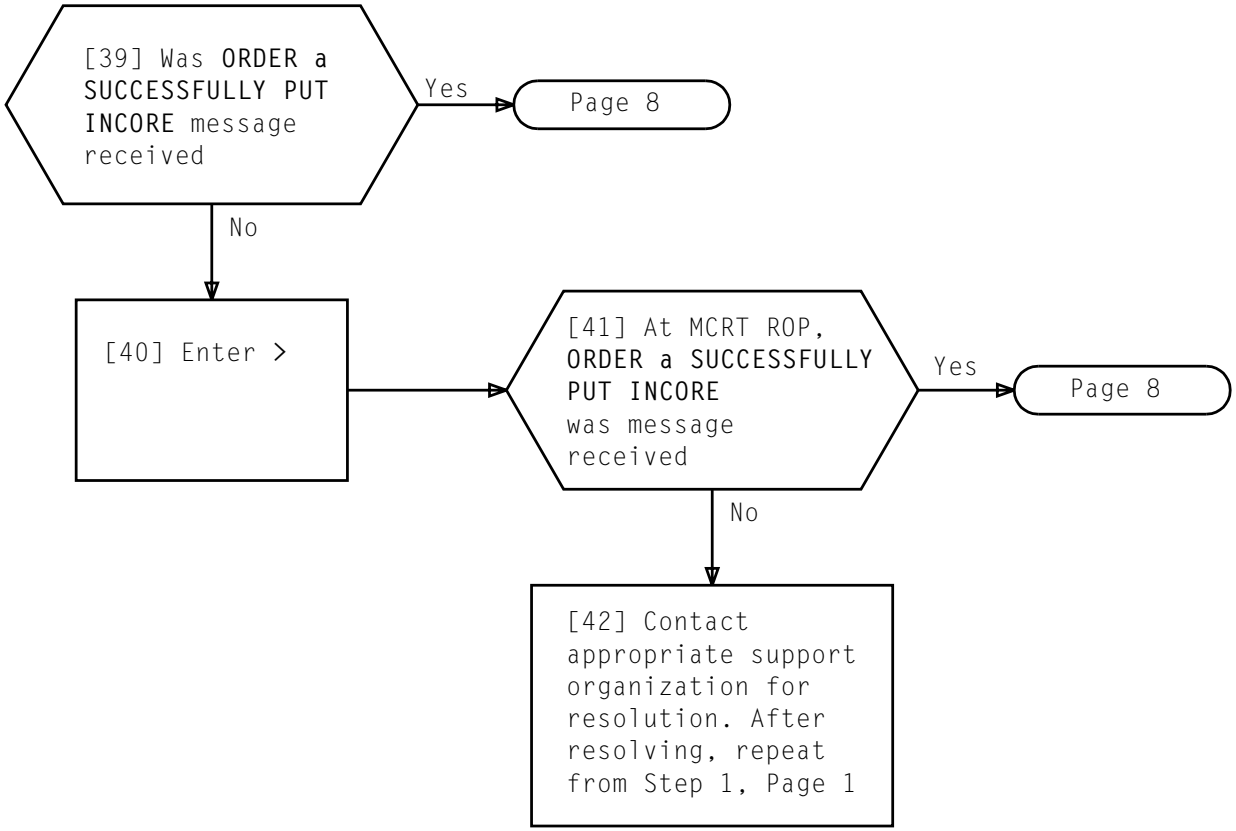

CHANGE SIGNALING LINK(S) TO AVAILABLE

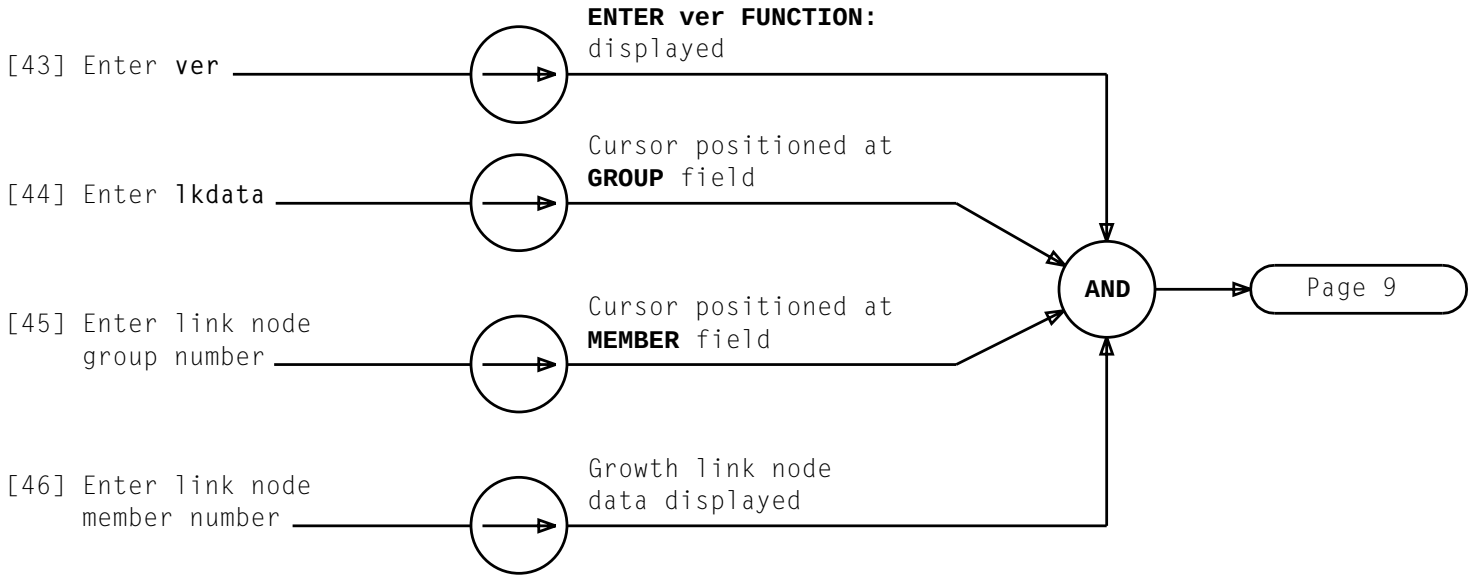

CHANGE SIGNALING LINK(S) TO AVAILABLE

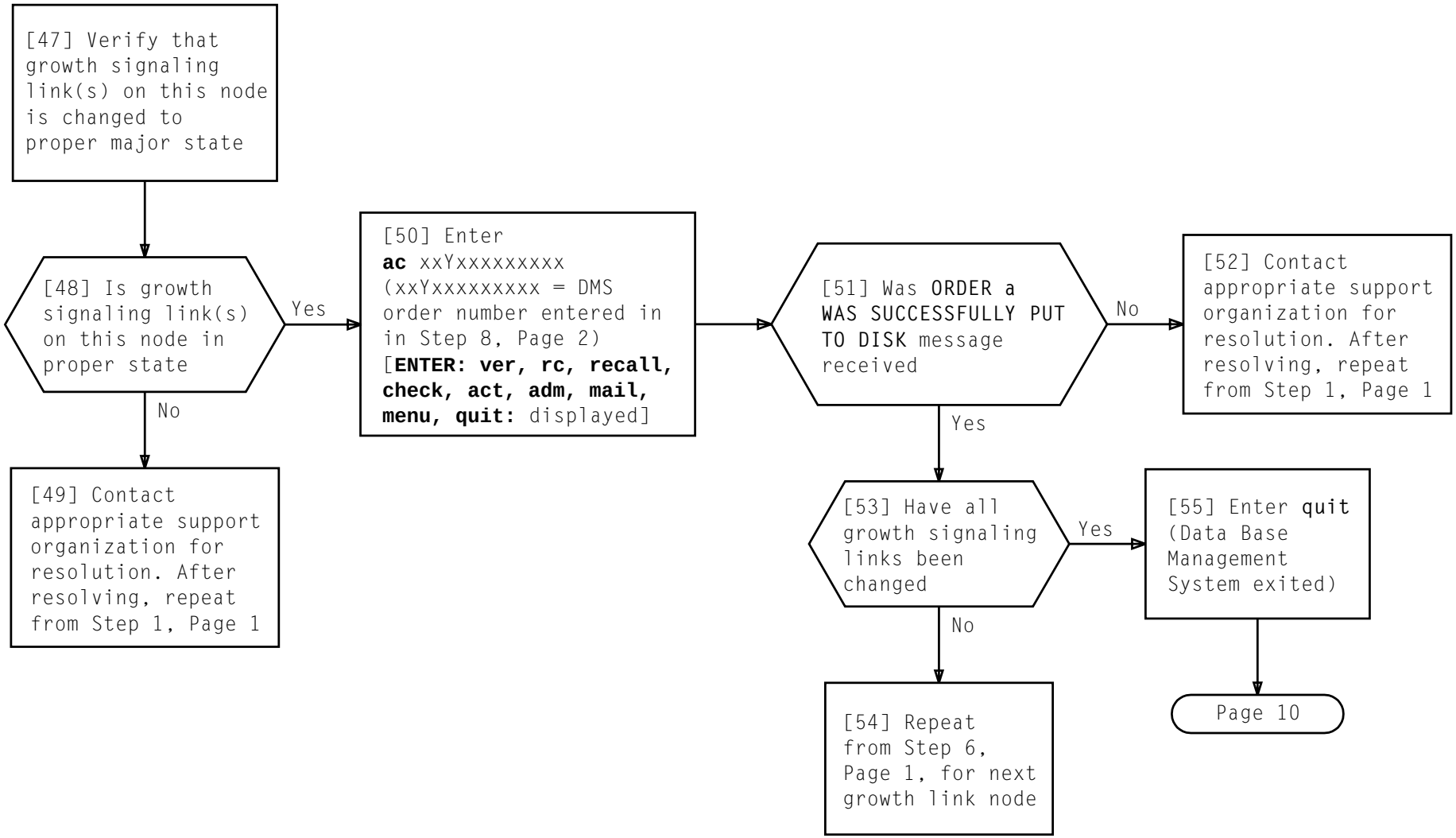

CHANGE SIGNALING LINK(S) TO AVAILABLE

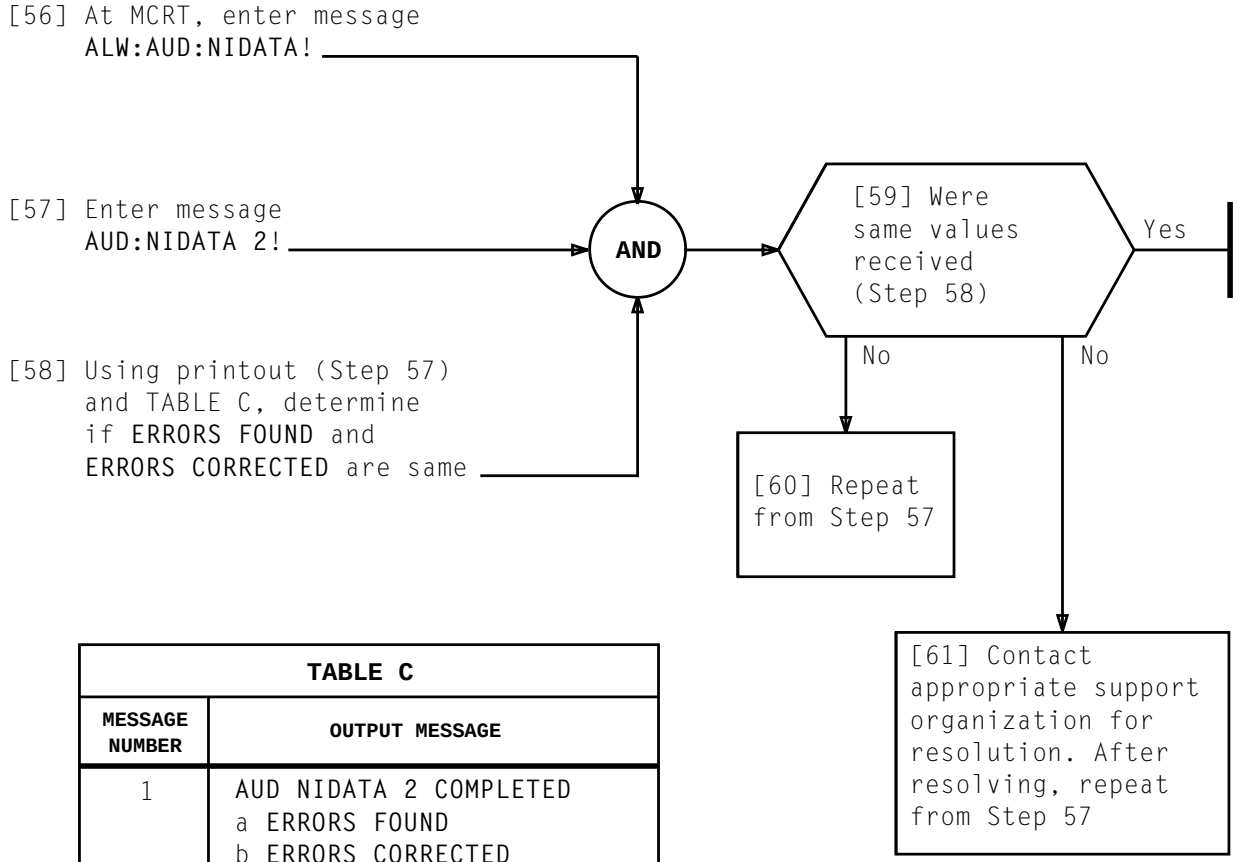

TABLE C

MESSAGE NUMBER	OUTPUT MESSAGE
1	AUD NIDATA 2 COMPLETED a ERRORS FOUND b ERRORS CORRECTED

a = Total number of errors found
b = Total number of errors corrected

CHANGE SIGNALING LINK(S) TO AVAILABLE

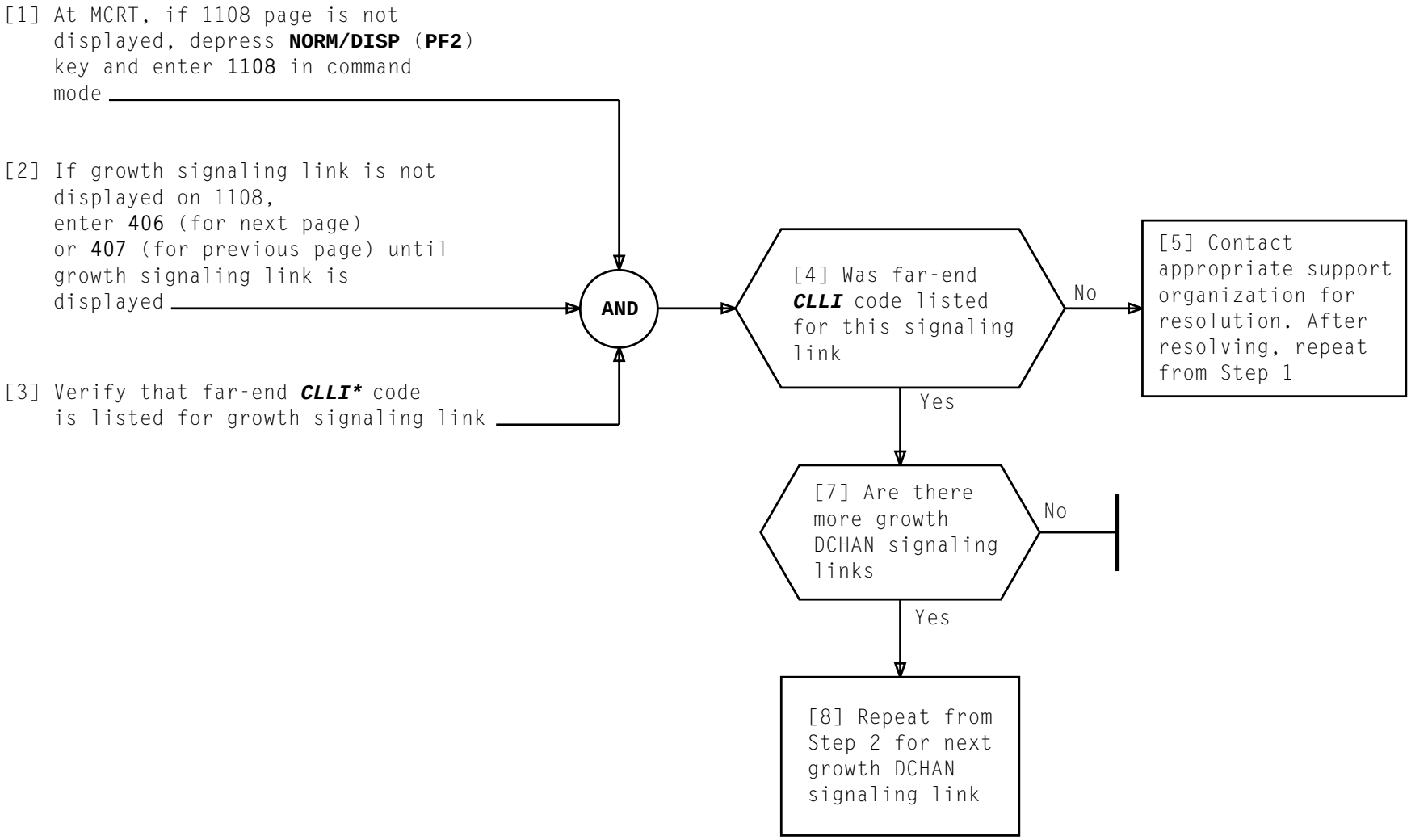

*COMMON LANGUAGE is a registered trademark; and CLEI, CLLI, CLCI, and CLFI are trademarks of Bell Communications Research, Inc.

VERIFY THAT FAR-END CLLI IS ASSIGNED TO SIGNALING LINK(S)

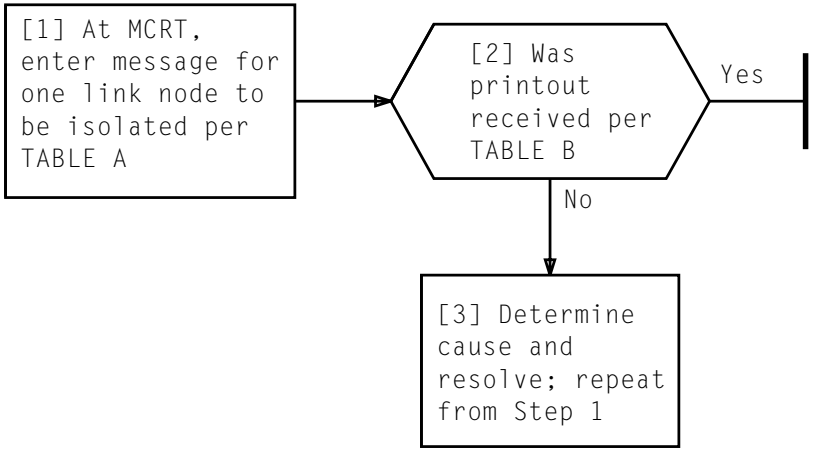

TABLE A	
MESSAGE NUMBER	**INPUT MESSAGE**
1	CFR:RING,a;EXCLUDE!
a = RPCNxx 0 (for Ring Peripheral Controller Node) or LNxx y (for All Other Link Nodes) xx = Group Number y = Member Number	

TABLE B	
MESSAGE NUMBER	**OUTPUT MESSAGES**
1	RING REPT RING CFR RING CONFIGURATION ESTABLISHED (nnn ms) BISO NODE = a, EISO NODE = LNaa b RING CFR RING LNaa b COMPL

ISOLATE REMOVED LINK NODE(S)

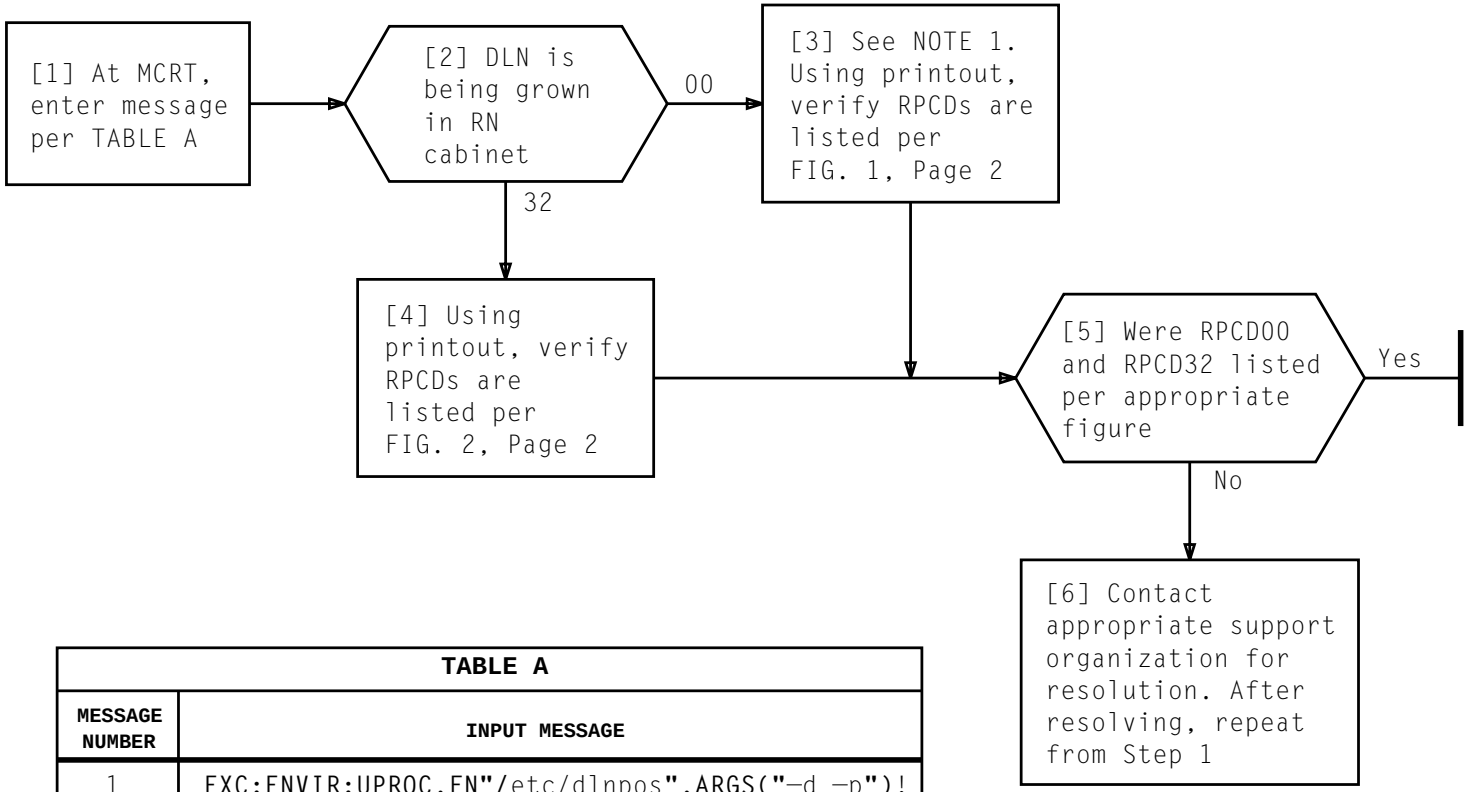

TABLE A

MESSAGE NUMBER	INPUT MESSAGE
1	EXC:ENVIR:UPROC,FN"/etc/dlnpos",ARGS("–d –p")!

NOTE 1
Initially, growth DLNs (**dln3** and **dln4**) will be shown as member number 11

Issue 6	**SEP 1998**
234-153-055	**DLP**
PAGE 1 of 2	**537**

VERIFY CURRENT DMA CHANNEL 12 CONFIGURATION

```
REPT DLNCM PROC (Redip): BEFORE REDIP 2 DLNS
    LN00-a  LN32-a

REPT DLNCM PROC (Redip): AFTER SUCCESSFUL REDIP 2 DLNS
    LN00-a  LN32-a

REPT DLNPOS PROCESS DLNCM TOLD TO READ THE ECD

REPT DLNPOS COMPLETE

EXC ENV UPROC STOPPED

dlnpos: dma channel 12 configuration

    API          0        ACT
    API          1        STBY
    RPCN00       0        ACT
    RPCN32       0        ACT
    RPCD00       a        GROW     dln1
    RPCD32       a        GROW     dln2
    RPCD00      11        UNEQIP   dln3
    RPCD32      11        UNEQIP   dln4

a = Equipped DLN member number
```

FIG. 1 — Printout for DLN Growth in RN Cabinet 00

```
REPT DLNCM PROC (Redip): BEFORE REDIP 3 DLNS
    LN00-a  LN32-a  LN00-b

REPT DLNCM PROC (Redip): AFTER SUCCESSFUL REDIP 3 DLNS
    LN00-a  LN32-a  LN00-b

REPT DLNPOS PROCESS DLNCM TOLD TO READ THE ECD

REPT DLNPOS COMPLETE

EXC ENV UPROC STOPPED

dlnpos: dma channel 12 configuration

    API          0        ACT
    API          1        STBY
    RPCN00       0        ACT
    RPCN32       0        ACT
    RPCD00       a        GROW     dln1
    RPCD32       a        GROW     dln2
    RPCD00       b        GROW     dln3
    RPCD32       b        UNEQIP   dln4

a = Equipped DLN member number
b = Growth DLN member number
```

FIG. 2 — Printout for DLN Growth in RN Cabinet 32

VERIFY CURRENT DMA CHANNEL 12 CONFIGURATION

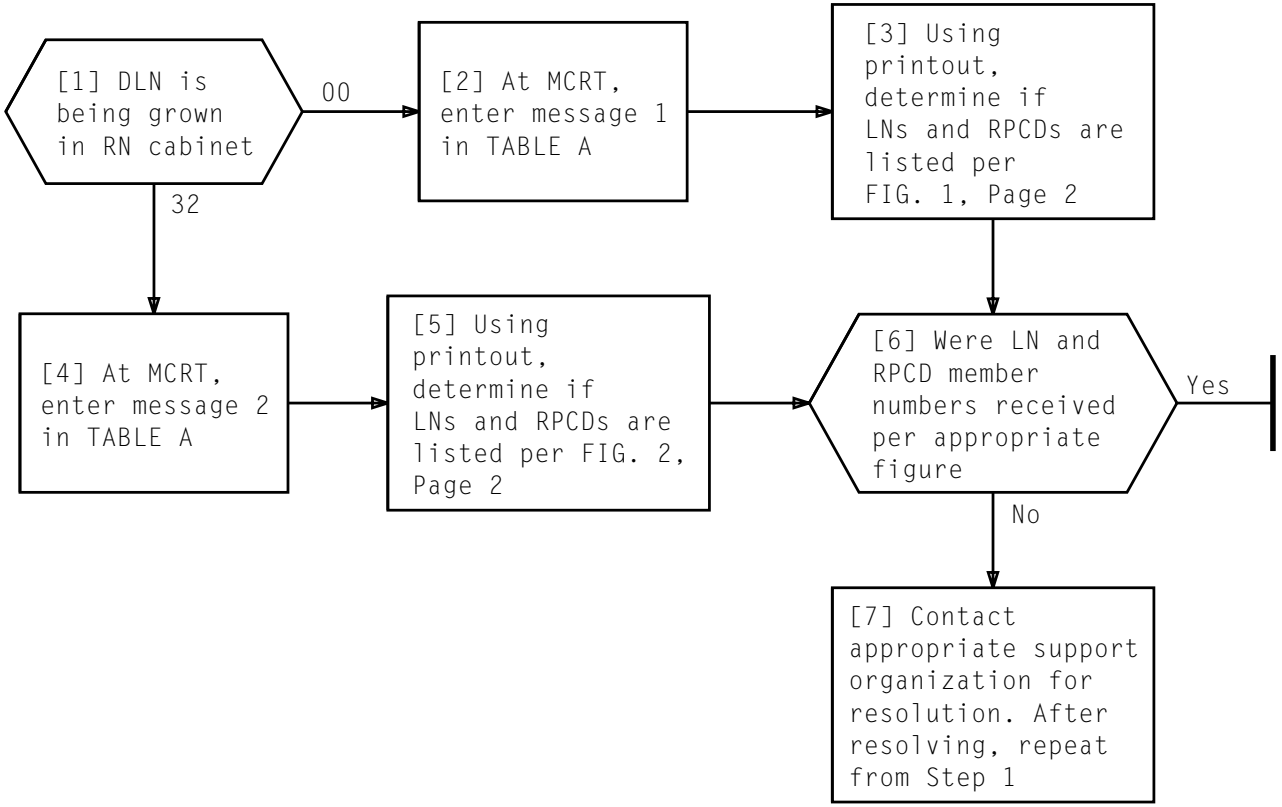

TABLE A

MESSAGE NUMBER	INPUT MESSAGE
1	EXC:ENVIR:UPROC,FN"/etc/dlnpos",ARGS("-3LN00-a –d –p")! a = Growth DLN member number
2	EXC:ENVIR:UPROC,FN"/etc/dlnpos",ARGS("-4LN32-a –d –p")! a = Growth DLN member number

INITIATE PROCESSES FOR GROWTH DLN

```
REPT SPOOLIT JOB(1) COMPLETED
REPT DLNPOS LN00-a ADDED TO SCRIPT FILE
   /tmp/dlnpos.scr
REPT DLNPOS RCVECD CALLED ON INCORE ECD
REPT DLNPOS RCVECD COMPLETE
REPT DLNPOS PROCESS DLNCM TOLD TO READ ECD
REPT DLNCM PROC (Redip): BEFORE REDIP 2 DLNS
    LN00-b      LN32-b
REPT DLNCM PROC (Redip): AFTER SUCCESSFUL REDIP 3 DLNS
    LN00-b      LN32-b      LN00-a
REPT DLNPOS COMPLETE
EXC ENV UPROC STOPPED
dlnpos: dma channel 12 configuration
    API          0        ACT
    API          1        STBY
    RPCN00       0        ACT
    RPCN32       0        ACT
    RPCD00       b        GROW     dln1
    RPCD32       b        GROW     dln2
    RPCD00       a        UNEQIP   dln3
    RPCD32      11        UNEQIP   dln4
a = Growth DLN member number
b = Equipped DLN member number
```

FIG. 1 — Printout for DLN Growth in RN Cabinet 00

```
REPT SPOOLIT JOB(1) COMPLETED
REPT DLNPOS LN32-a ADDED TO SCRIPT FILE
   /tmp/dlnpos.scr
REPT DLNPOS RCVECD CALLED ON INCORE ECD
REPT DLNPOS RCVECD COMPLETE
REPT DLNPOS PROCESS DLNCM TOLD TO READ ECD
REPT DLNCM PROC (Redip): BEFORE REDIP 3 DLNS
    LN00-b      LN32-b      LN00-a
REPT DLNCM PROC (Redip): AFTER SUCCESSFUL REDIP 4 DLNS
    LN00-b      LN32-b      LN00-a      LN32-a
REPT DLNPOS COMPLETE
EXC ENV UPROC STOPPED
dlnpos: dma channel 12 configuration
    API          0        ACT
    API          1        STBY
    RPCN00       0        ACT
    RPCN32       0        ACT
    RPCD00       b        GROW     dln1
    RPCD32       b        GROW     dln2
    RPCD00       a        GROW     dln3
    RPCD32       a        UNEQIP   dln4
a = Growth DLN member number
b = Equipped DLN member number
```

FIG. 2 — Printout for DLN Growth in RN Cabinet 32

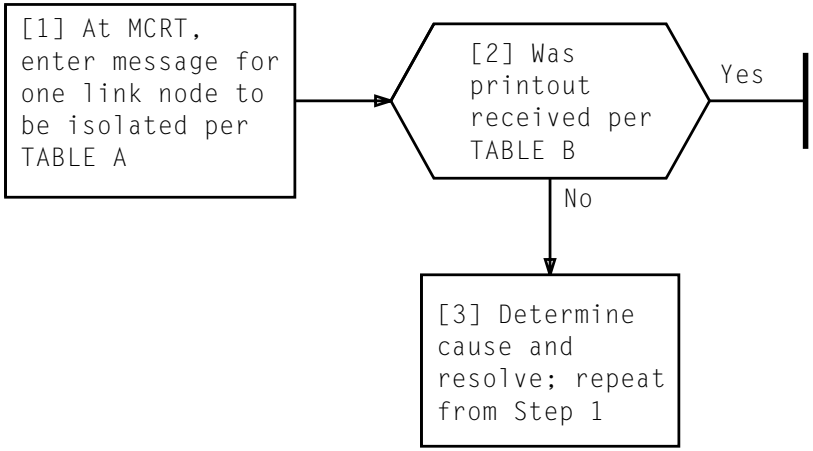

TABLE A	
MESSAGE NUMBER	**INPUT MESSAGE**
1	CFR:RING,a;EXCLUDE!
a = RPCNxx 0 (for Ring Peripheral Controller Node) or LNxx y (for All Other Link Nodes) xx = Group Number y = Member Number	

TABLE B	
MESSAGE NUMBER	**OUTPUT MESSAGES**
1	RING REPT RING CFR RING CONFIGURATION ESTABLISHED (nnn ms) BISO NODE = a, EISO NODE = LNaa b RING CFR RING LNaa b COMPL

ISOLATE REMOVED LINK NODE(S)

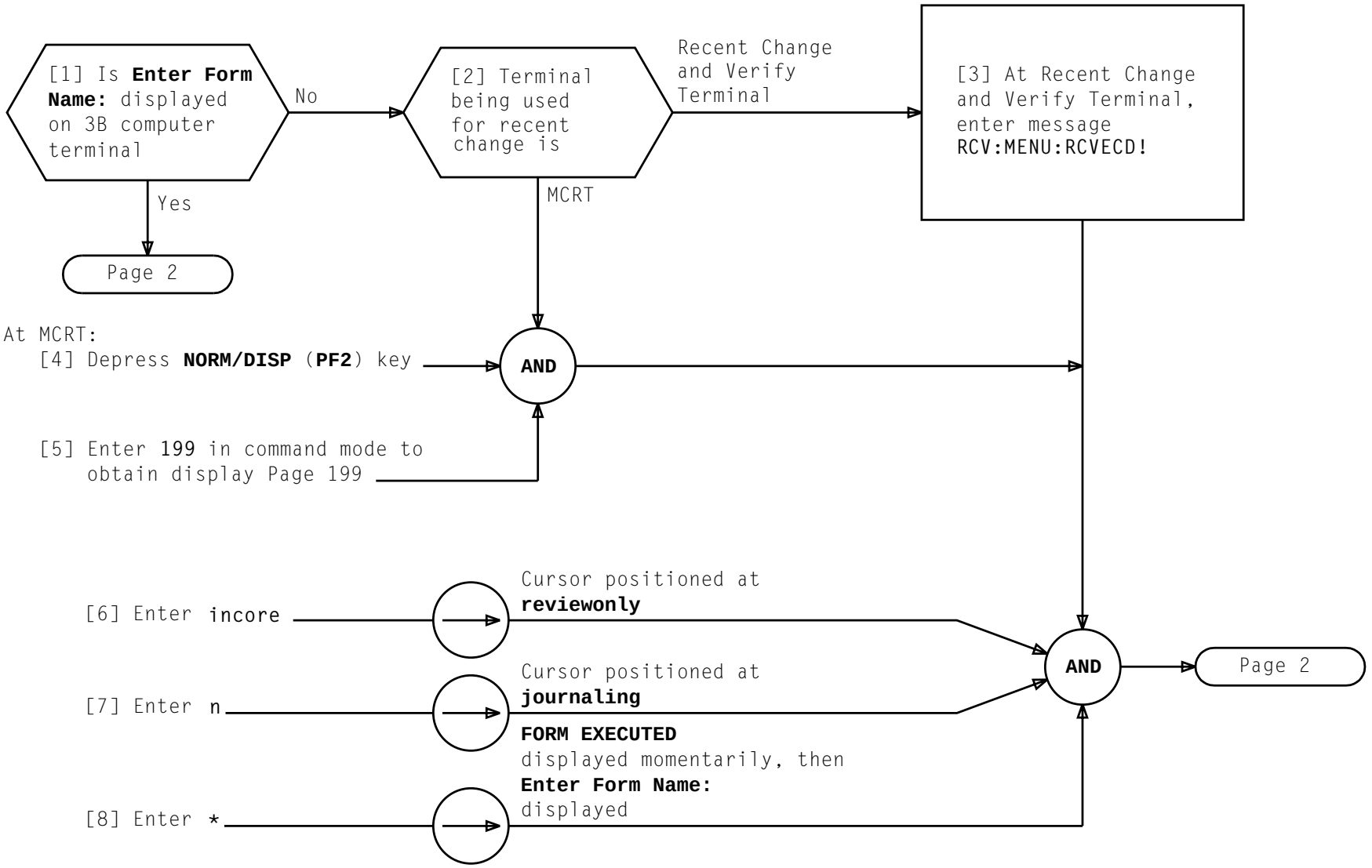

DEGROW GROWTH ASSOCIATED LINK NODE TO UNEQIP

Issue 6	SEP 1998
234-153-055	DLP
PAGE 1 of 5	540

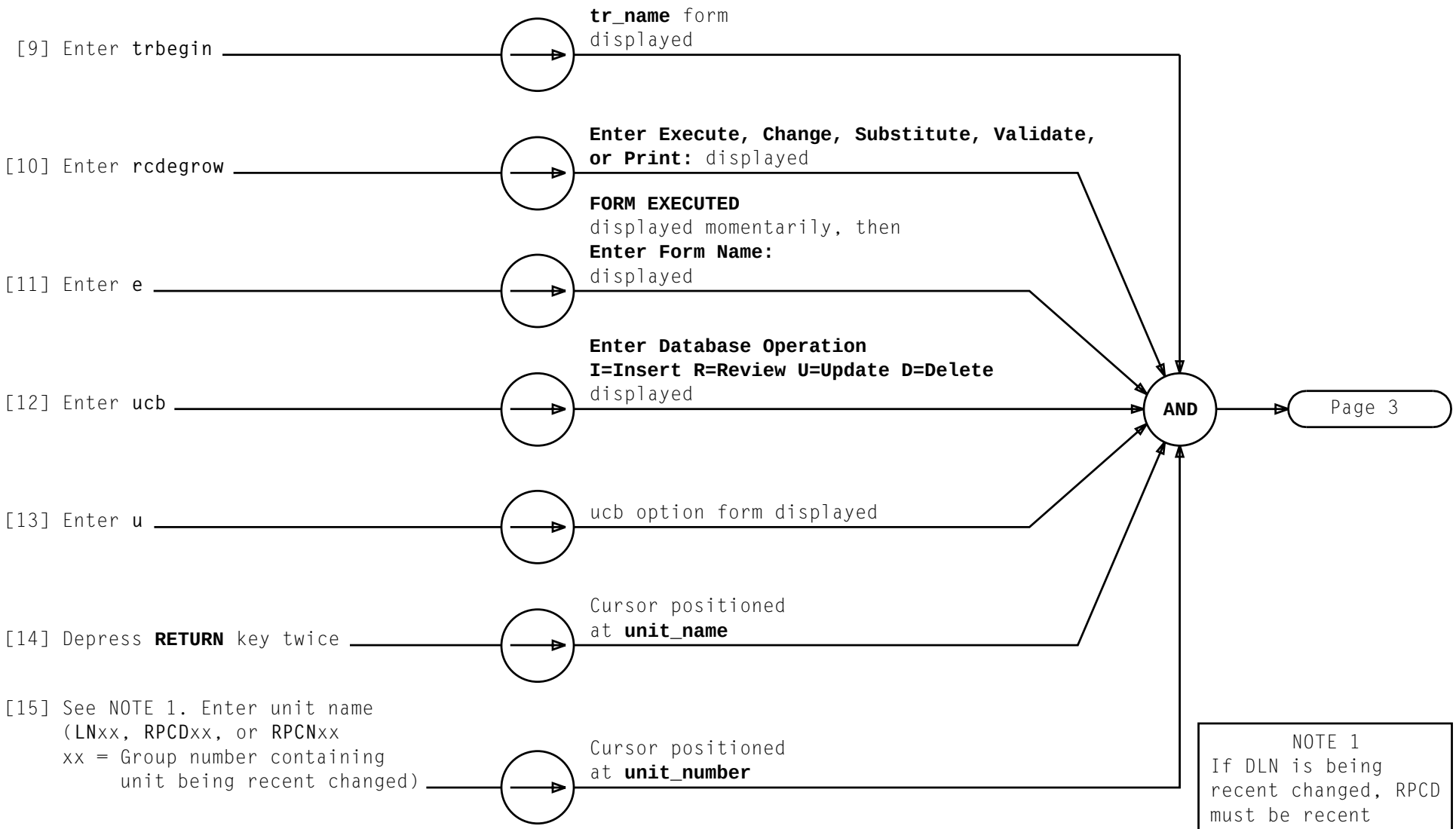

NOTE 1
If DLN is being recent changed, RPCD must be recent changed after DLN. **trend** is required between recent changes

Issue 6	**SEP 1998**
234-153-055	**DLP**
PAGE 2 of 5	**540**

DEGROW GROWTH ASSOCIATED LINK NODE TO UNEQIP

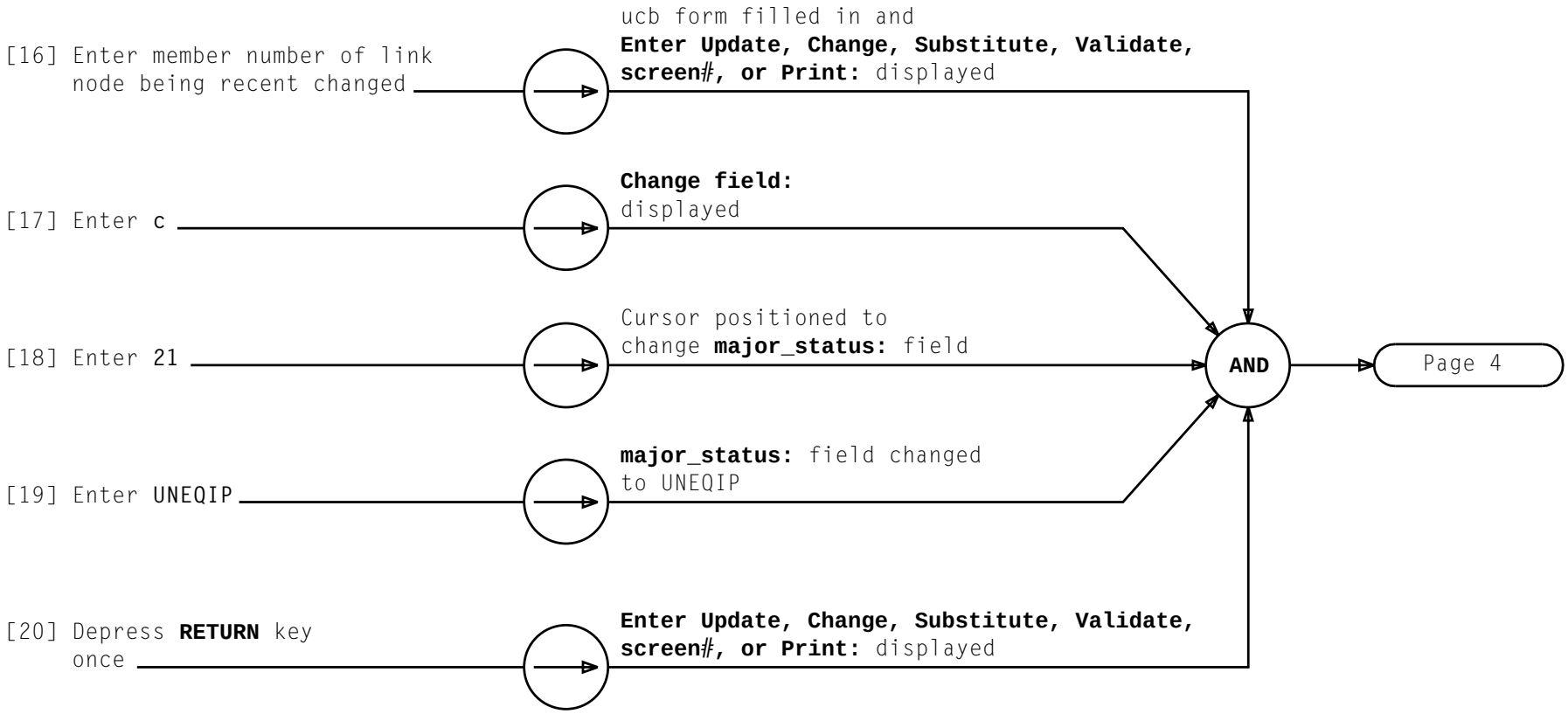

DEGROW GROWTH ASSOCIATED LINK NODE TO UNEQIP

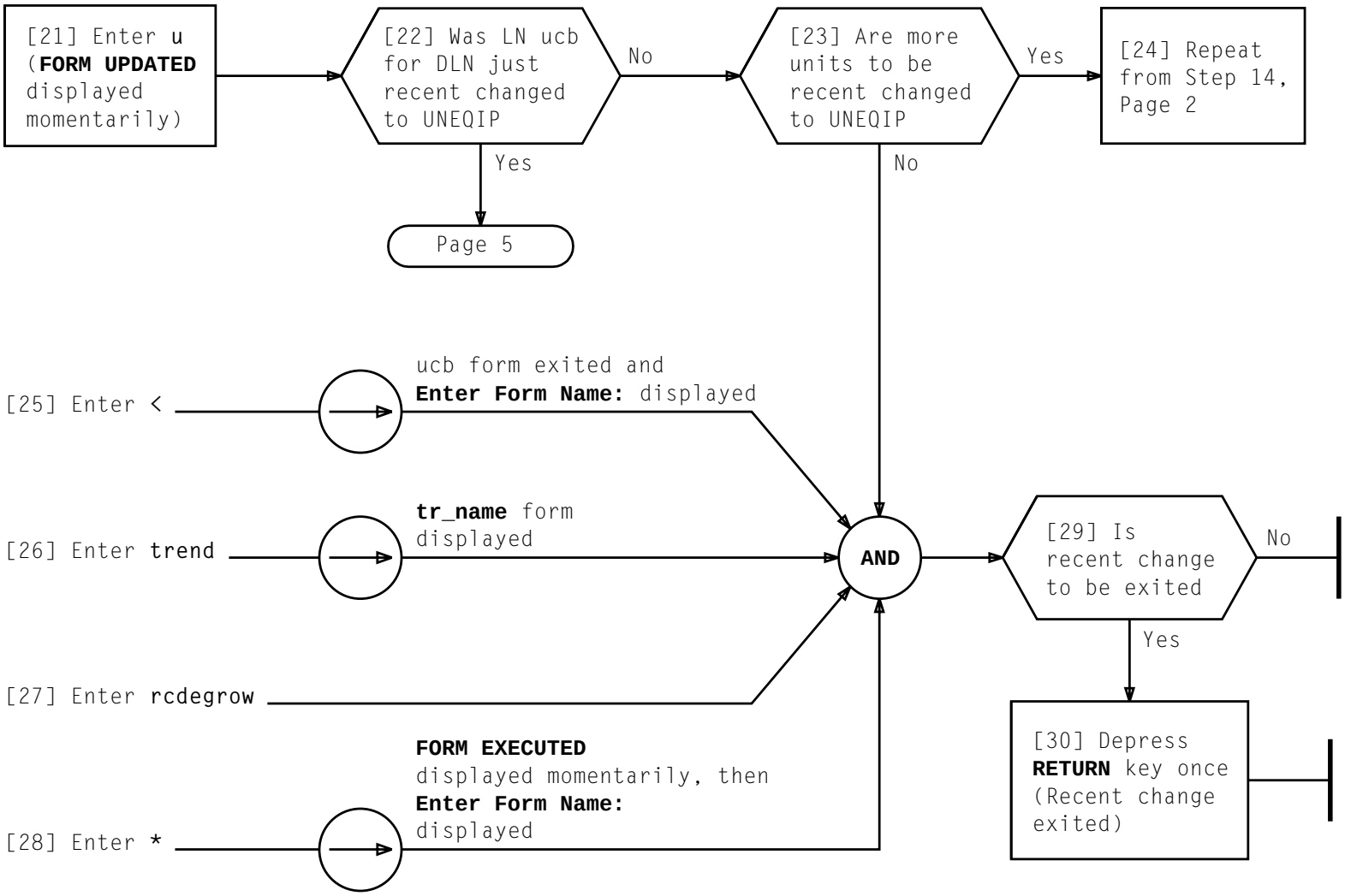

DEGROW GROWTH ASSOCIATED LINK NODE TO UNEQIP

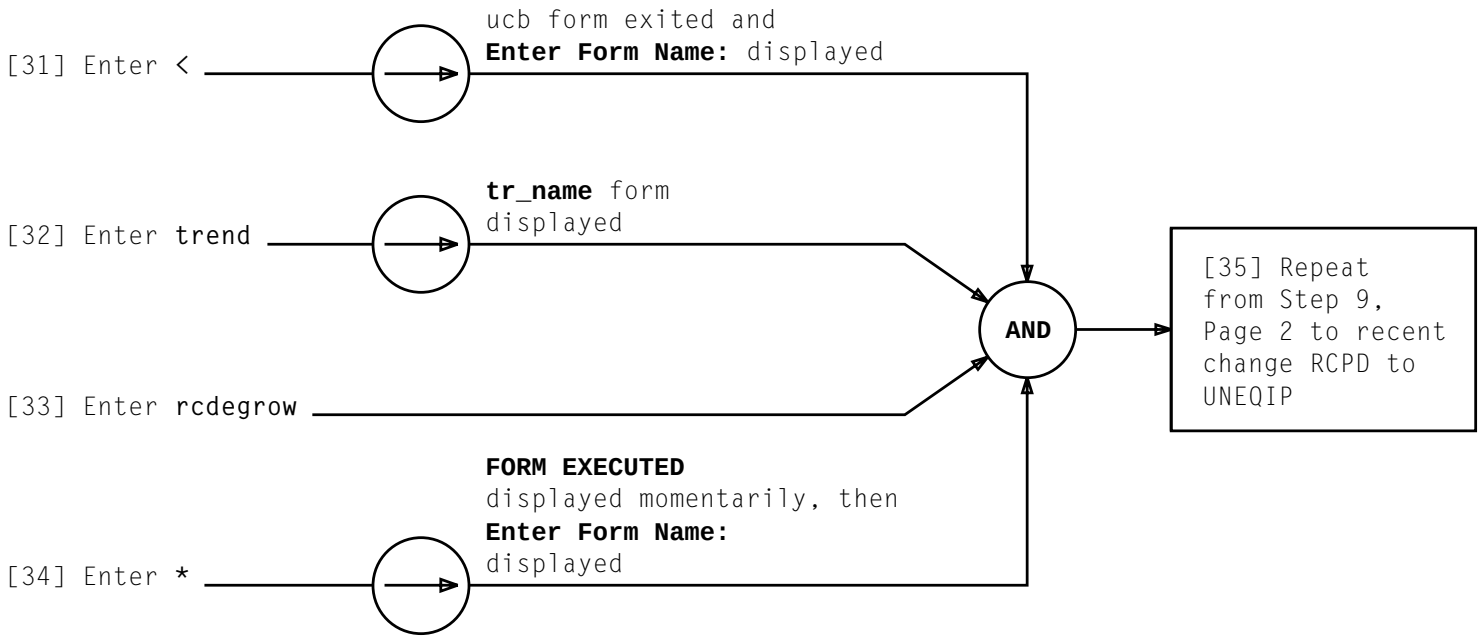

DEGROW GROWTH ASSOCIATED LINK NODE TO UNEQIP

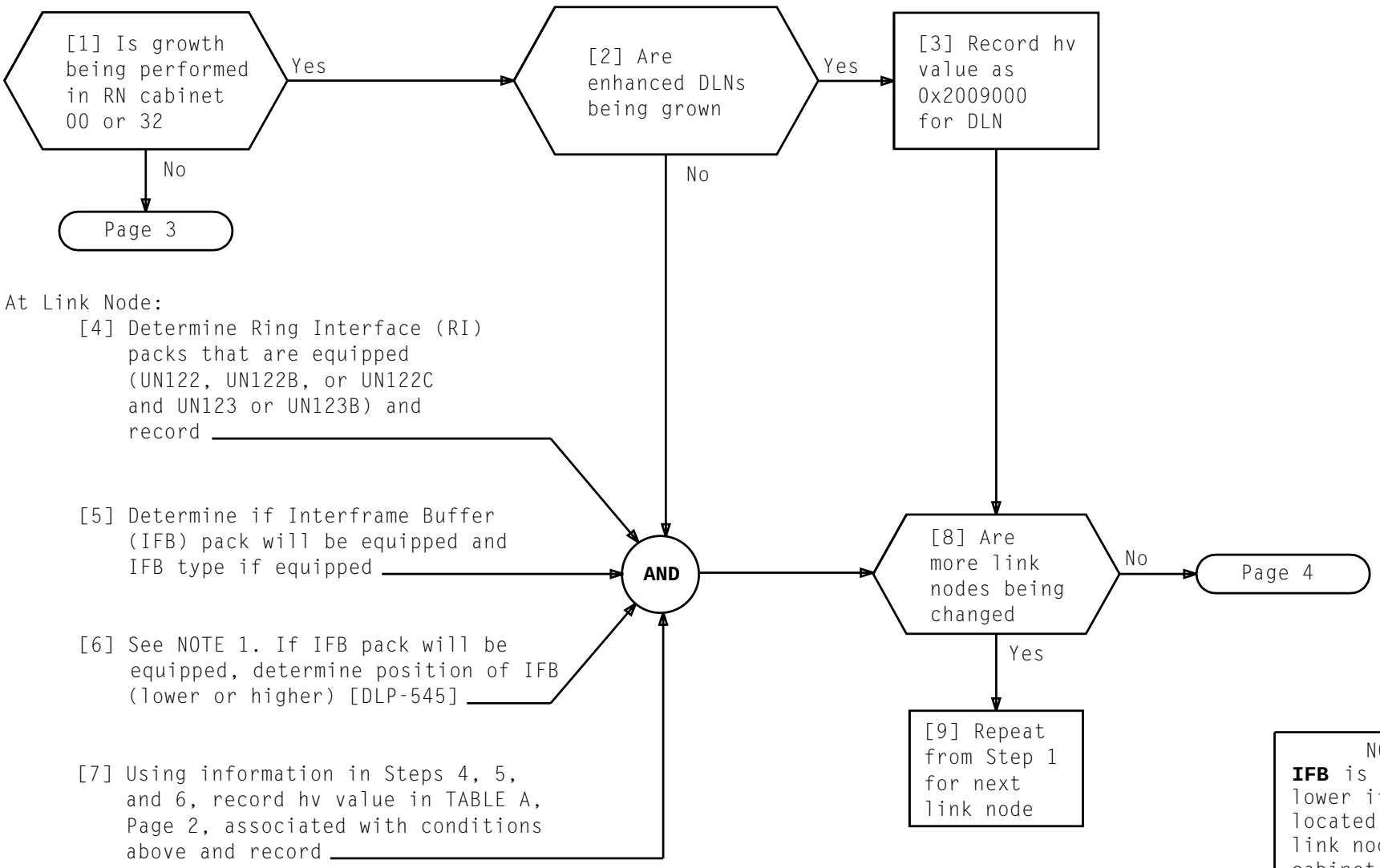

NOTE 1

IFB is considered lower if **IFB** is located in lowest link node in cabinet. **IFB** is considered higher if **IFB** is located in highest link node in cabinet

RECENT CHANGE GROWTH UNITS FROM UNEQIP TO GROW AND HV, MV, AND PACKCODE VALUES, AS REQUIRED

TABLE A							
Ring Interface Pack(s)	IFB Type	IFB Position	HV Value	Ring Interface Pack(s)	IFB Type	IFB Position	HV Value
UN122/UN123	None	N/A	0x0100	UN303	None	N/A	0x8000
UN122/UN123	TN918	Higher	0x0110	UN303	TN918	Higher	0x8010
UN122/UN123	TN1508	Higher	0x0150	UN303	TN1508	Higher	0x8050
UN122/UN123	TN1803	Higher	0x0160	UN303	TN1803	Higher	0x8060
UN122/UN123	TN918	Lower	0x0101	UN303	TN918	Lower	0x8001
UN122/UN123	TN1508	Lower	0x0105	UN303	TN1508	Lower	0x8005
UN122/UN123	TN1803	Lower	0x0106	UN303	TN1803	Lower	0x8006
UN122B/UN123B	None	N/A	0x0900	UN303B*	None	N/A	0x9000
UN122B/UN123B	TN918	Higher	0x0910	UN303B*	TN918	Higher	0x9010
UN122B/UN123B	TN1508	Higher	0x0950	UN303B*	TN1508	Higher	0x9050
UN122B/UN123B	TN1803	Higher	0x0960	UN303B*	TN1803	Higher	0x9060
UN122B/UN123B	TN918	Lower	0x0901	UN303B*	TN918	Lower	0x9001
UN122B/UN123B	TN1508	Lower	0x0905	UN303B*	TN1508	Lower	0x9005
UN122B/UN123B	TN1803	Lower	0x0906	UN303B*	TN1803	Lower	0x9006
UN122C/UN123B	None	N/A	0x1900	UN304*	None	N/A	0xc000
UN122C/UN123B	TN918	Higher	0x1910	UN304*	TN918	Higher	0xc010
UN122C/UN123B	TN1508	Higher	0x1950	UN304*	TN1508	Higher	0xc050
UN122C/UN123B	TN1803	Higher	0x1960	UN304*	TN1803	Higher	0xc060
UN122C/UN123B	TN918	Lower	0x1901	UN304*	TN918	Lower	0xc001
UN122C/UN123B	TN1508	Lower	0x1905	UN304*	TN1508	Lower	0xc005
UN122C/UN123B	TN1803	Lower	0x1906	UN304*	TN1803	Lower	0xc006
				UN397	None	N/A	0x4000
				UN397	TN918	Higher	0x4010
				UN397	TN1508	Higher	0x4050
				UN397	TN1803	Higher	0x4060
				UN397	TN918	Lower	0x4001
				UN397	TN1508	Lower	0x4005
				UN397	TN1803	Lower	0x4006

TABLE A (Contd)			
Ring Interface Pack(s)†	IFB Type	IFB Position	HV Value‡
UN303B	None	N/A	0x200 9000
UN303B	TN918	Higher	0x200 9010
UN303B	TN1508	Higher	0x200 9050
UN303B	TN1803	Higher	0x200 9060
UN303B	TN918	Lower	0x200 9001
UN303B	TN1508	Lower	0x200 9005
UN303B	TN1803	Lower	0x200 9006
UN304	None	N/A	0x200 c000
UN304	TN918	Higher	0x200 c010
UN304	TN1508	Higher	0x200 c050
UN304	TN1803	Higher	0x200 c060
UN304	TN918	Lower	0x200 c001
UN304	TN1508	Lower	0x200 c005
UN304	TN1803	Lower	0x200 c006

* If, Node is Non-DLN, use this pack
† If, Node is DLN, use these packs
‡ HV Value for DLN's is used on both LN and RPCD UCB forms

RECENT CHANGE GROWTH UNITS FROM UNEQIP TO GROW AND HV, MV, AND PACKCODE VALUES, AS REQUIRED

At Link Node:

[10] Determine Integrated Ring Node (IRN) pack that is equipped (UN303 or UN303B) and record

[11] Determine if Interframe Buffer (IFB) pack will be equipped and IFB type if equipped

[12] If IFB pack will be equipped, determine position of IFB (lower or higher) [DLP-545]

[13] Using information in Steps 10, 11, and 12, record hv value in TABLE A, Page 2, associated with conditions above and record

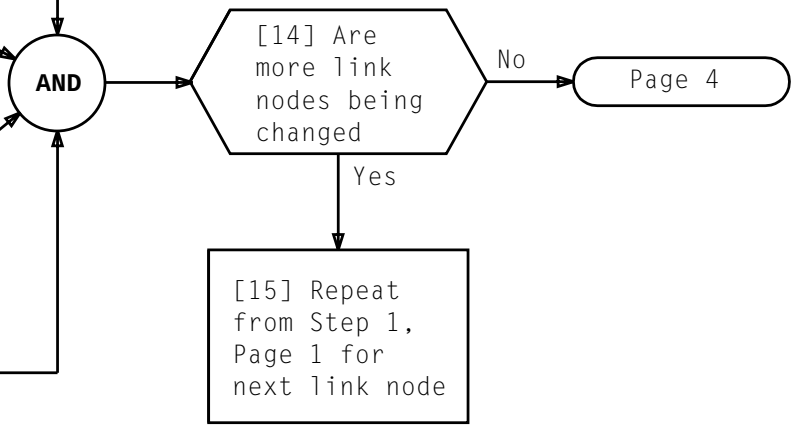

RECENT CHANGE GROWTH UNITS FROM UNEQIP TO GROW AND HV, MV, AND PACKCODE VALUES, AS REQUIRED

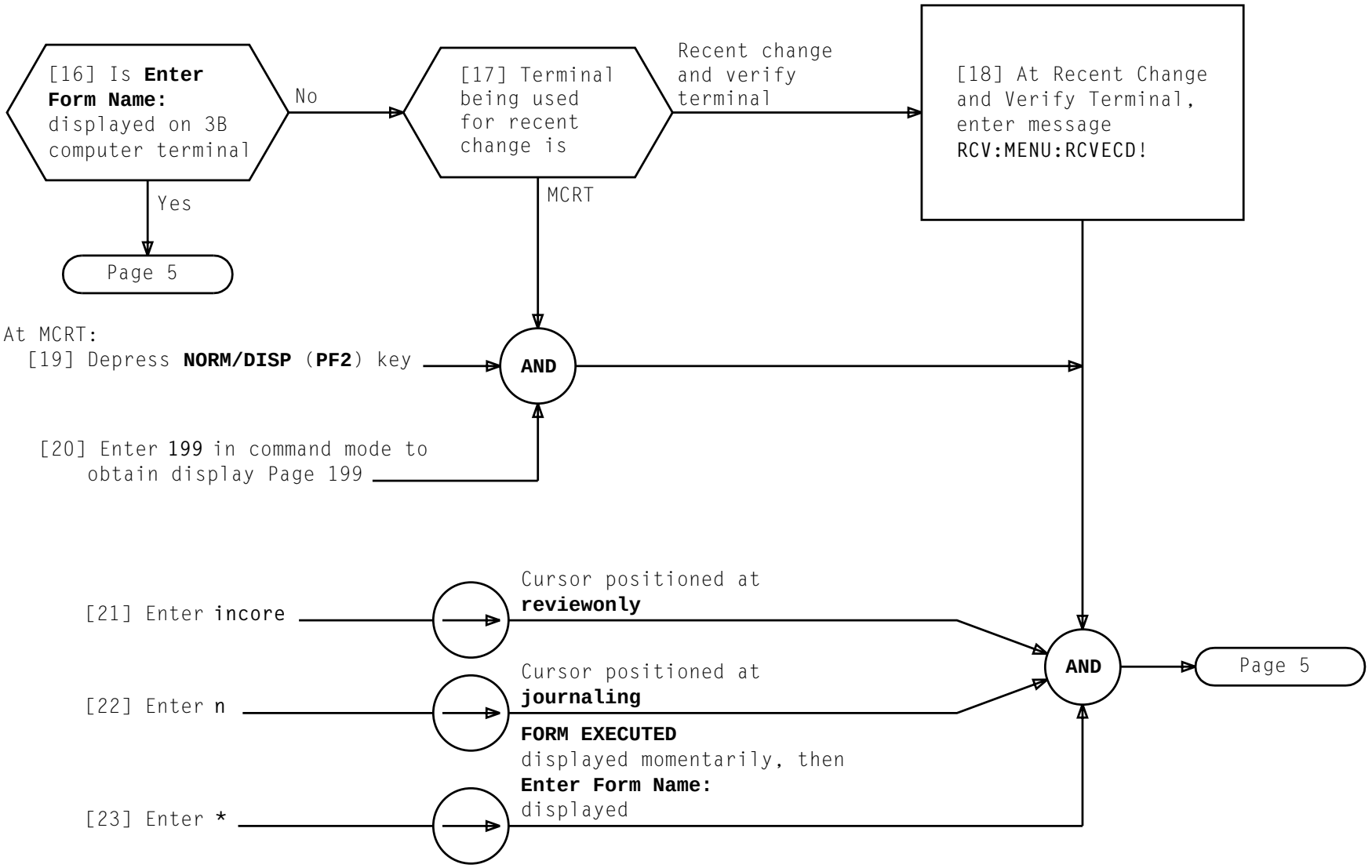

RECENT CHANGE GROWTH UNITS FROM UNEQIP TO GROW AND HV, MV, AND PACKCODE VALUES, AS REQUIRED

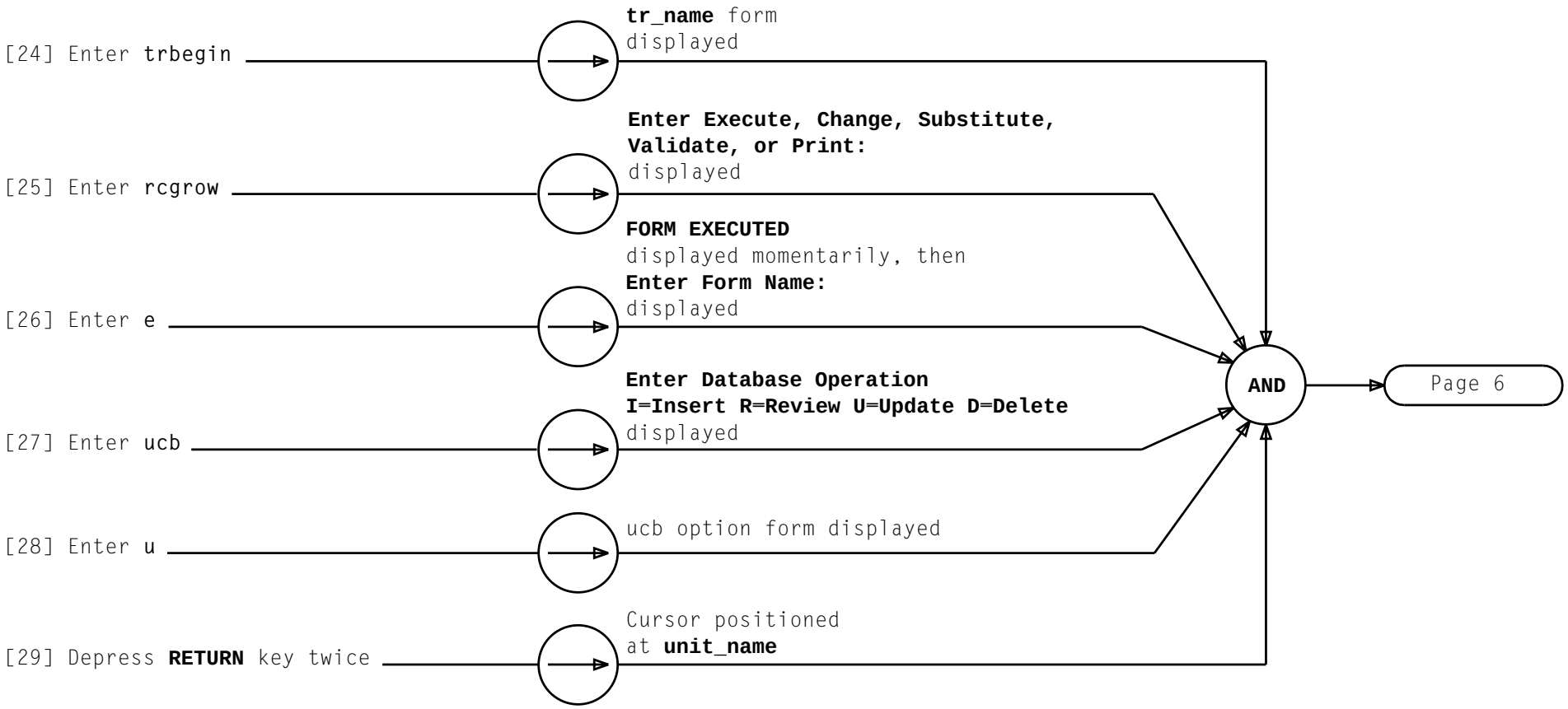

RECENT CHANGE GROWTH UNITS FROM UNEQIP TO GROW AND HV, MV AND PACKCODE VALUES, AS REQUIRED

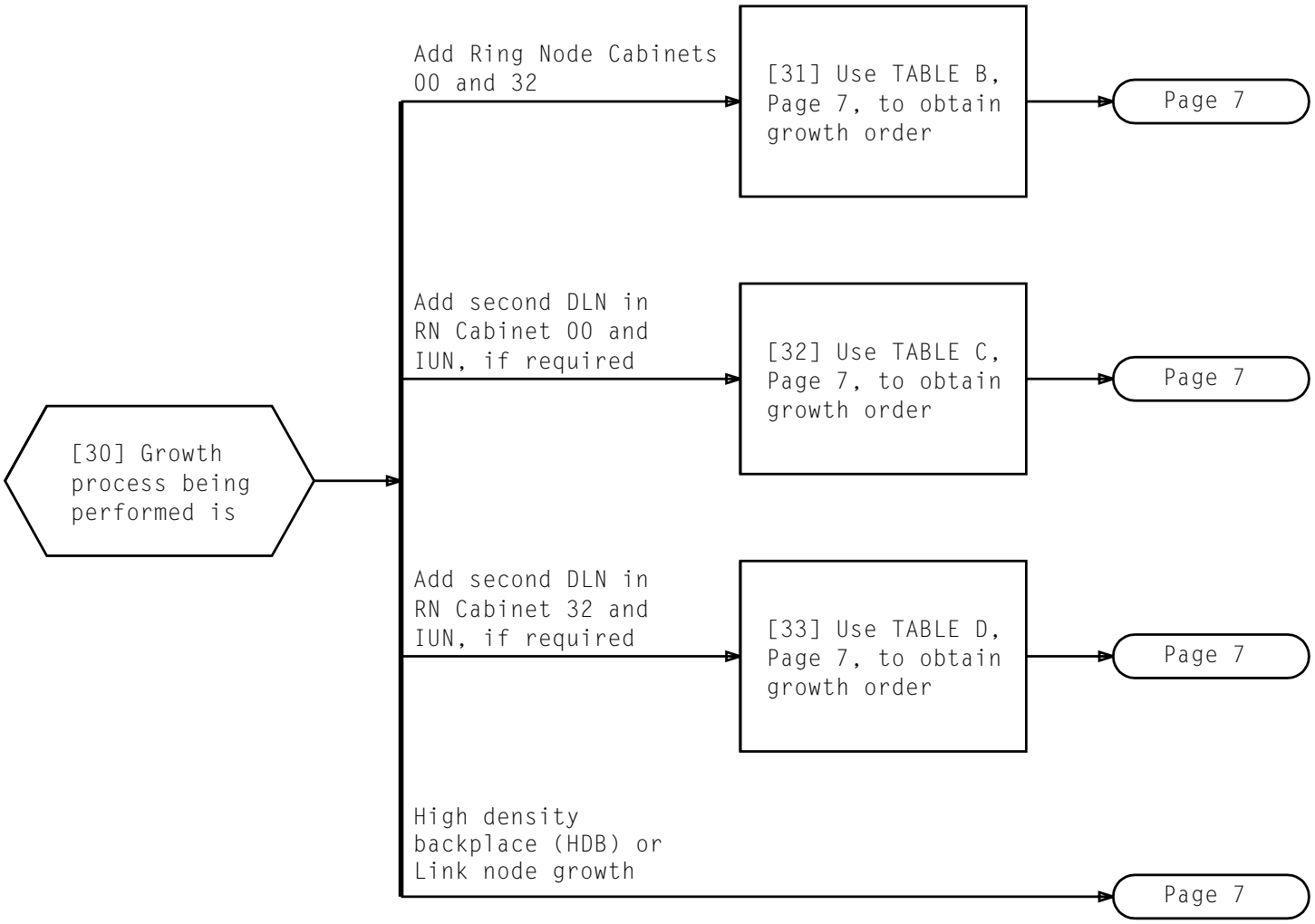

RECENT CHANGE GROWTH UNITS FROM UNEQIP TO GROW AND HV, MV, AND PACKCODE VALUES, AS REQUIRED

[34] Enter growth unit name (**RPCN**aa, **RPCD**aa, or **LN**aa aa = cabinet/group number)

Cursor positioned at **unit_number**

[35] Enter growth member number

ucb form filled in and **Enter Update, Change, Substitute, Validate, screen#, or Print:** displayed

AND

Page 8

TABLE B

UNIT NAME*	UNIT NUMBER*
RPCN00	0
RPCN32	0
RPCD00	5
LN00	5
RPCD32	5
LN32	5

* Units must be recent changed in order listed

TABLE C

UNIT NAME*	UNIT NUMBER*
RPCD00	a
LN00	a
LN00	b

* Units must be recent changed in order listed

a = Growth DLN member number

b = Link node member number if being grown

TABLE D

UNIT NAME*	UNIT NUMBER*
RPCD32	a
LN32	a
LN32	b

* Units must be recent changed in order listed

a = Growth DLN member number

b = Link node member number if being grown

RECENT CHANGE GROWTH UNITS FROM UNEQIP TO GROW AND HV, MV, AND PACKCODE VALUES, AS REQUIRED

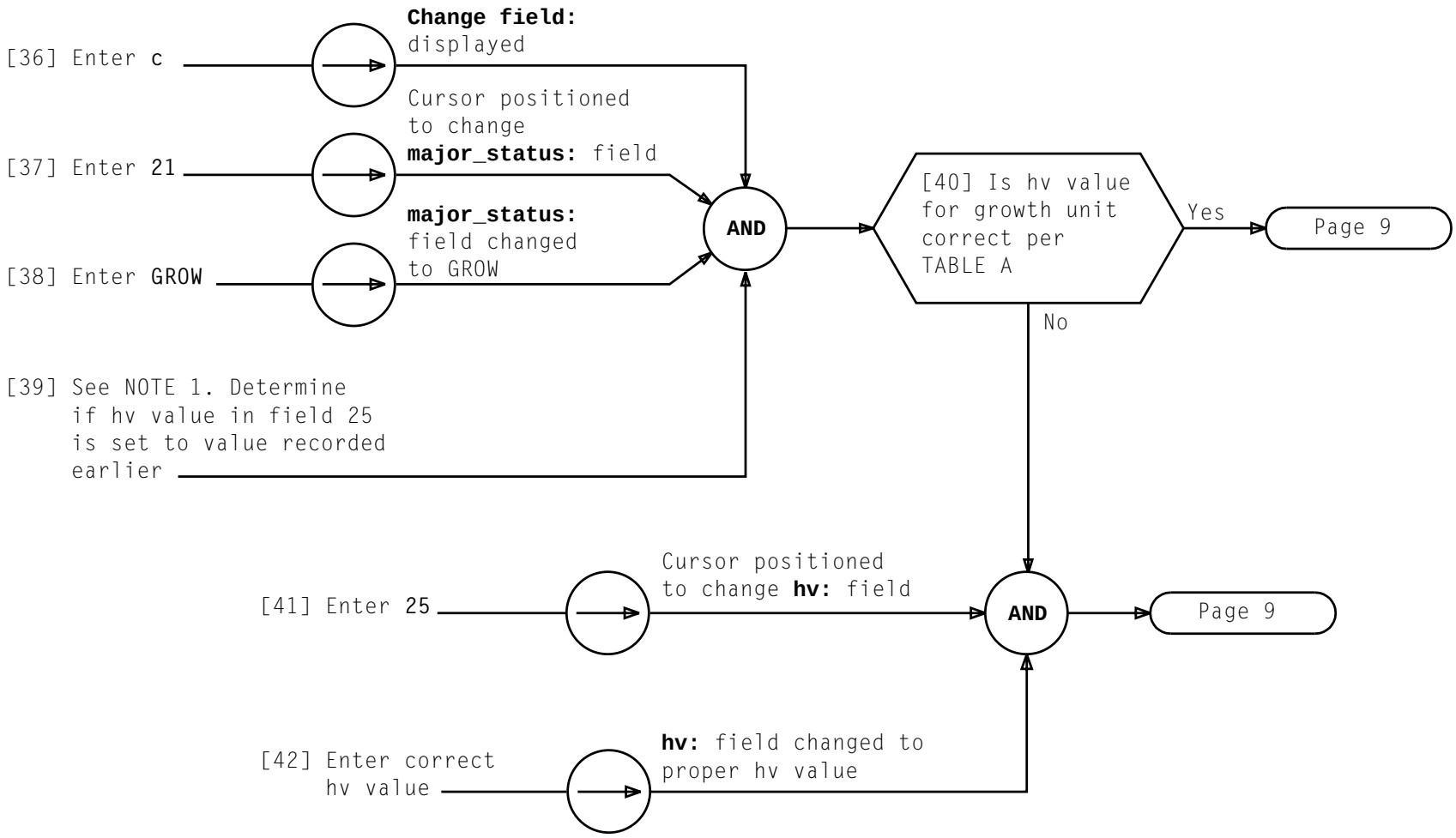

NOTE 1
If RPCD is being recent changed, hv value is same value as hv value for DLN

RECENT CHANGE GROWTH UNITS FROM UNEQIP TO GROW AND HV, MV, AND PACKCODE VALUES, AS REQUIRED

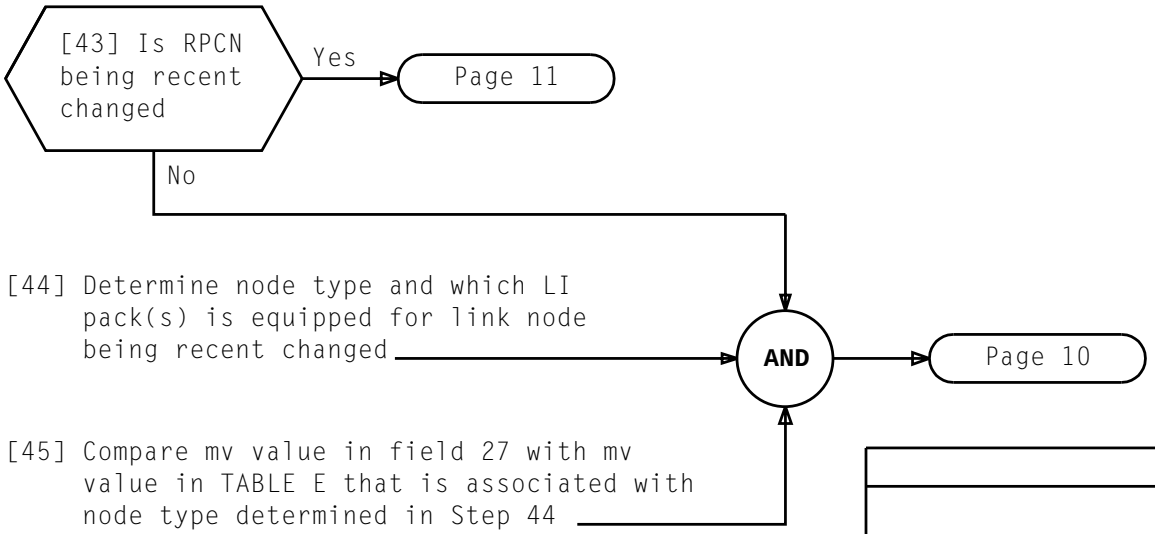

TABLE E

Node Type	MV Value LI Equipage			
	LI 0 Only	LI 1 Only	Both LIs	No LIs
CCS7 (without IRNs)	Blank*			
CCS7 (with IRNs)	0x43			
DCHAN (without T1FA) †	0x3a	0x3b	0x3c	
DCHAN (with T1FA) †	0x40	0x41	0x42	
DLN30 16 mbytes				0x23
IUN (without IRNs)				0x1
IUN (with IRNs, IRN-B or IRN2)				0x3
DLNE (RPCD)				0x23
RPCN				Blank*

* Blank field is obtained by entering an apostrophe.
† HDRNC can only be equipped with LI 0.

RECENT CHANGE GROWTH UNITS FROM UNEQIP TO GROW AND HV, MV, AND PACKCODE VALUES, AS REQUIRED

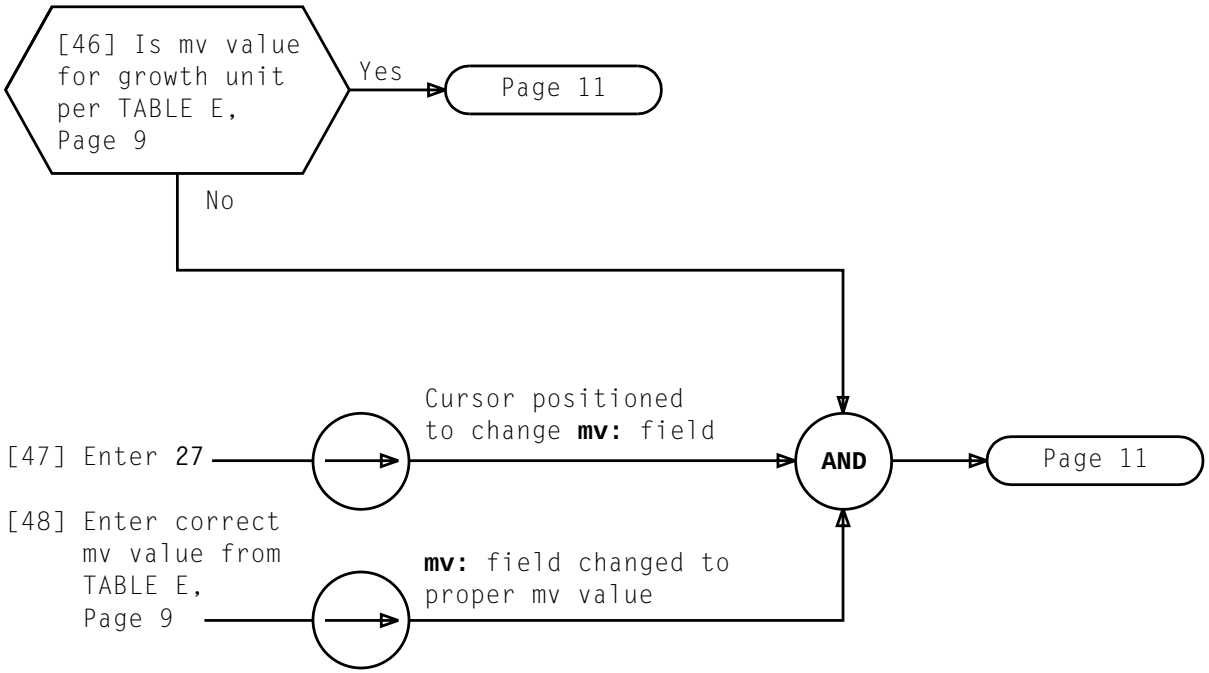

RECENT CHANGE GROWTH UNITS FROM UNEQIP TO GROW AND HV, MV, AND PACKCODE VALUES, AS REQUIRED

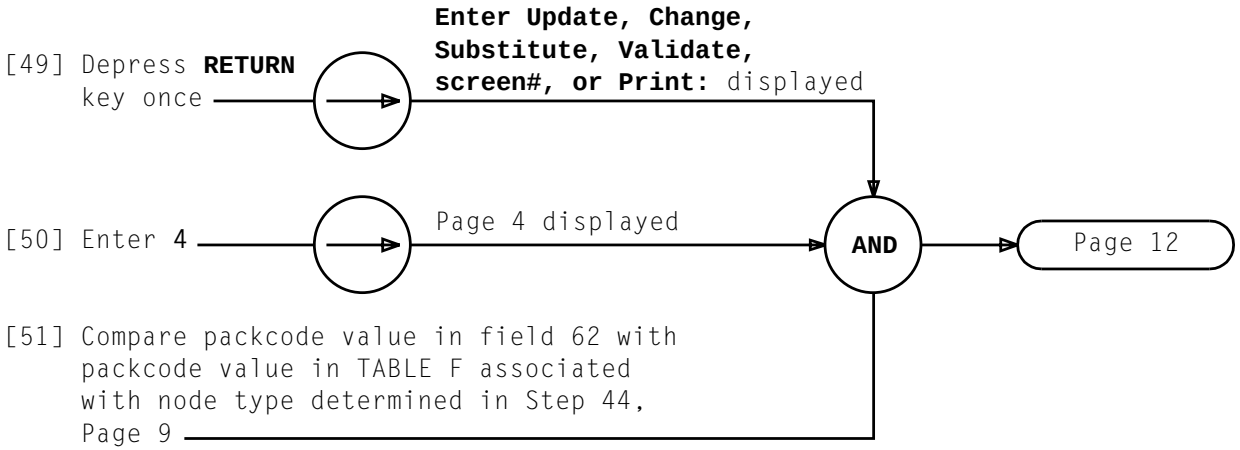

TABLE F

Node Type	Pack Code (Note)
CCS7 (without IRNs)	CNI7
CCS7 (with IRNs)	C7I
DCHAN (without T1FA)	PBXD
DCHAN (with T1FA)	PBXT
DLN30 16 mbytes	DLNE
IUN (without IRNs)	IUN
IUN (with IRNs or IRN-B)	IRN
IUN (with IRN2)	IRN2
DLNE (RPCD)	Blank *
RPCN	RPC

Note: Pack codes must be entered in capital letter.
* Blank field is obtained by entering an apostrophe.

RECENT CHANGE GROWTH UNITS FROM UNEQIP TO GROW AND HV, MV, AND PACKCODE VALUES, AS REQUIRED

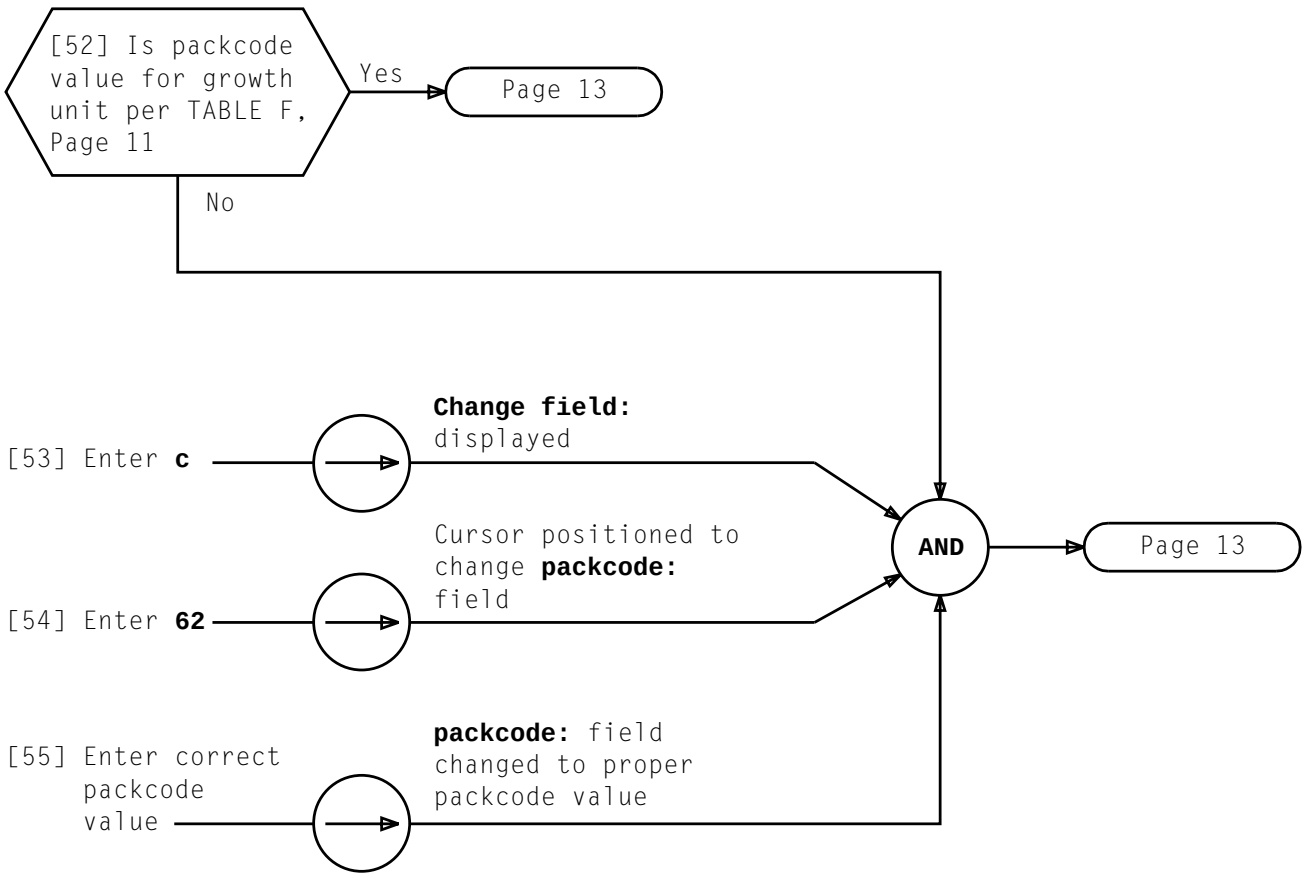

RECENT CHANGE GROWTH UNITS FROM UNEQIP TO GROW AND HV, MV, AND PACKCODE VALUES, AS REQUIRED

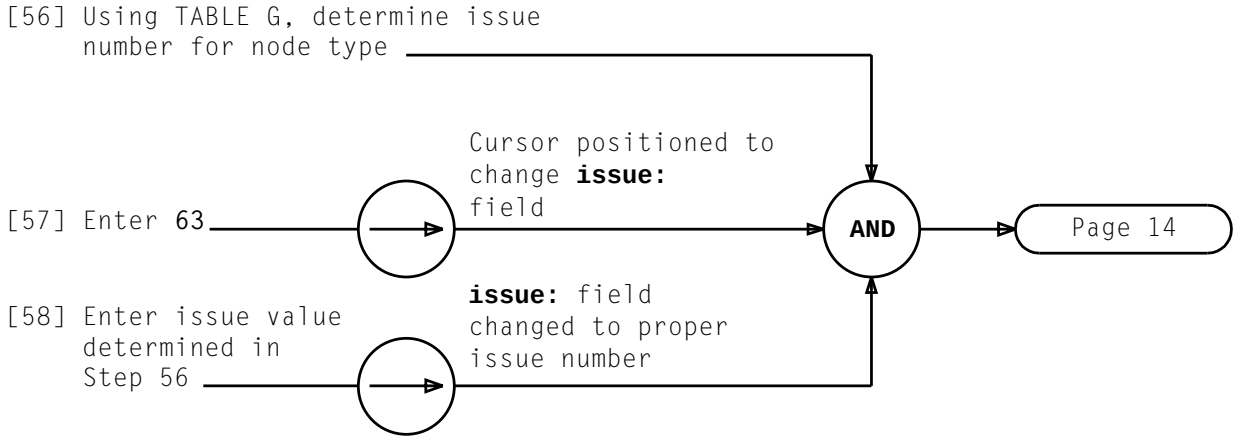

TABLE G	
Node Type	**Issue**
CCS7	1
DLN30 (RCPD)	1
DLNE (RPCD)	1
DCHAN (with IRN2)	3
RPCN	1
All Other Nodes	1
* Blank field is obtained by entering an apostrophe.	

RECENT CHANGE GROWTH UNITS FROM UNEQIP TO GROW AND HV, MV, AND PACKCODE VALUES, AS REQUIRED

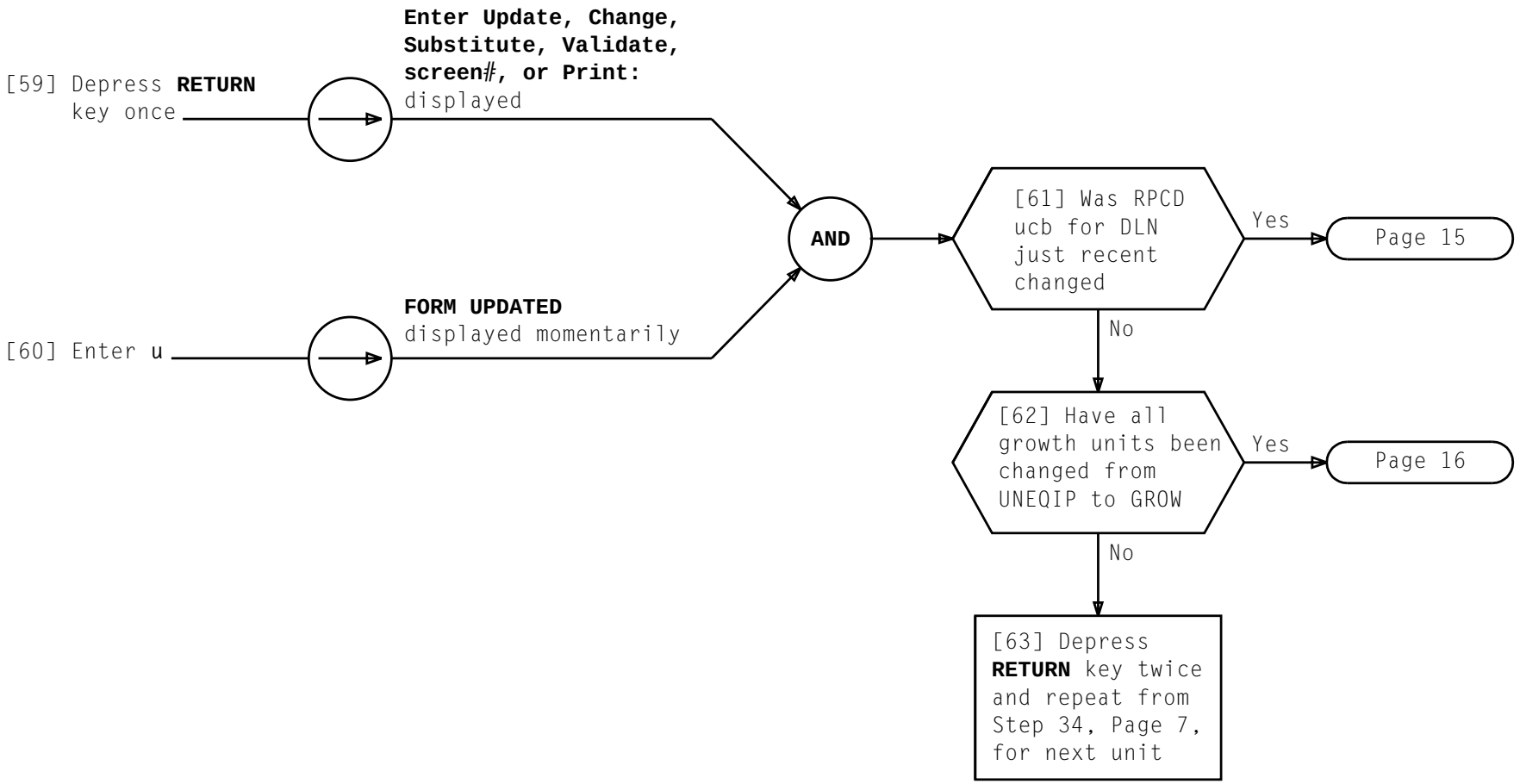

RECENT CHANGE GROWTH UNITS FROM UNEQIP TO GROW AND HV, MV, AND PACKCODE VALUES, AS REQUIRED

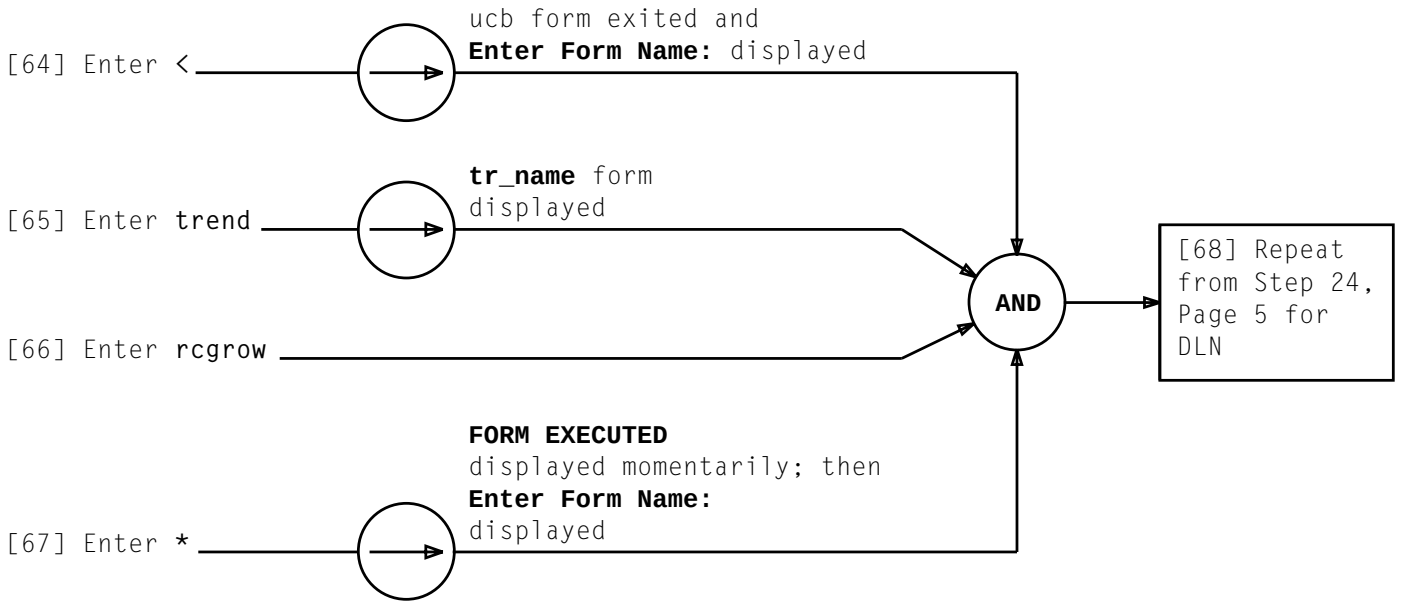

RECENT CHANGE GROWTH UNITS FROM UNEQIP TO GROW AND HV, MV, AND PACKCODE VALUES, AS REQUIRED

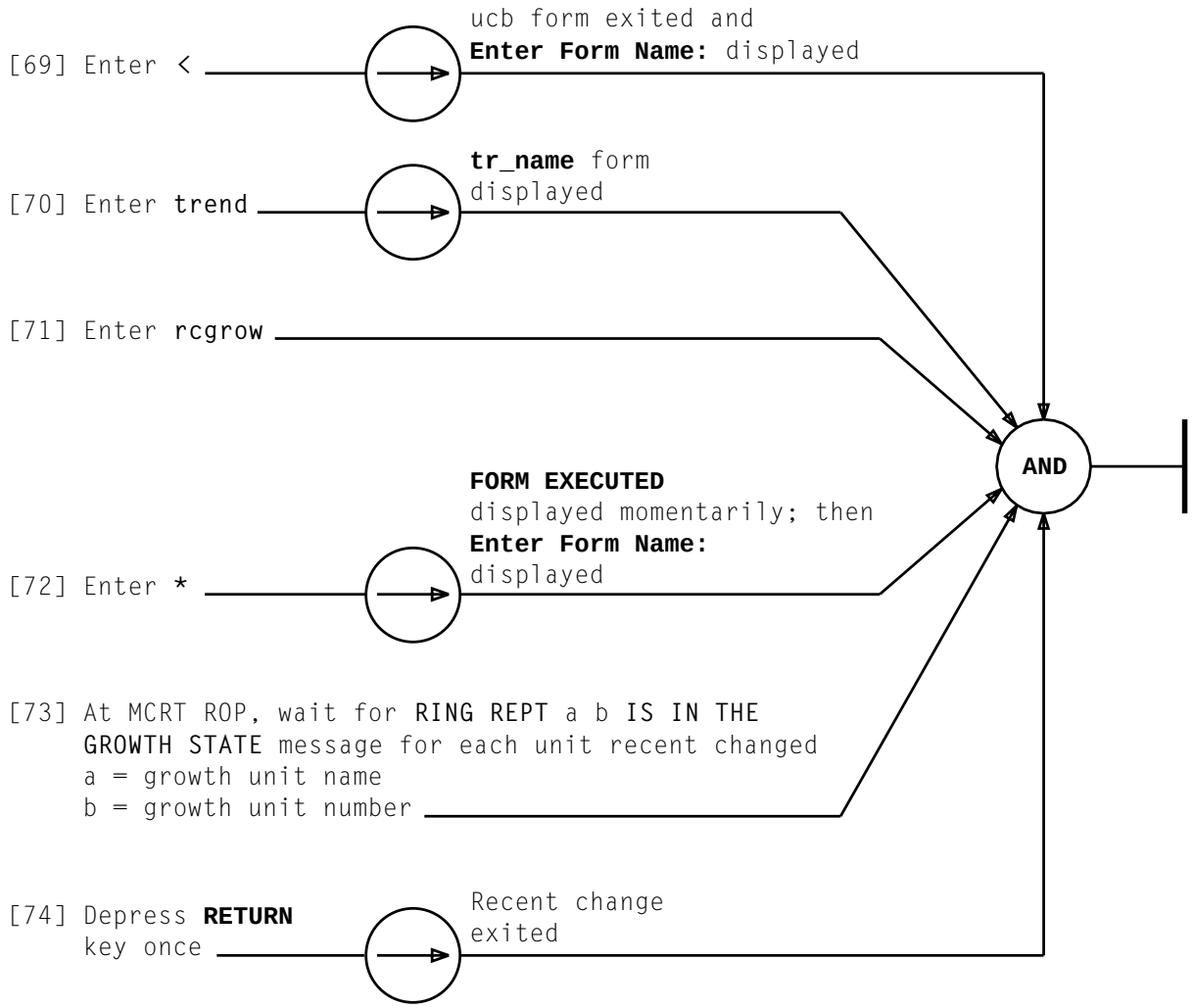

RECENT CHANGE GROWTH UNITS FROM UNEQIP TO GROW AND HV, MV, AND PACKCODE VALUES, AS REQUIRED

1. Ensure 3B computer has not experienced terminal suspends, bootstraps, diagnostic failures, or overloads within past 24 hours.

2. Ensure both CUs have been diagnosed ATP within past 24 hours.

3. Ensure all system problems have been cleared.

4. Ensure disks and IOPs are duplex and CUs are in ACTIVE-STANDBY mode.

5. At 1B MCC, enter Poke command **810 (SDC - Service Degrading Failure)** to obtain service-degrading report printout. If there are any listed, make corrective action to clear service-degrading condition of each unit listed before continuing

6. Ensure that APIs are in ACTIVE-STANDBY mode.

7. At 3B MCRT ROP, locate audit status printout and record any audits that are inhibited; they will have to be allowed before performing growth.

8. Ensure all link nodes in common network interface (CNI) ring are in Active-Usable (ACT-USBL) state and have not experienced any problems within past 24 hours.

9. Ensure CNI ring problems have been cleared.

10. Ensure any signaling link problems have been cleared.

11. At 3B MCRT, enter **OP:RING;DETD!** and ensure that no **"i"** is listed for any link node (**"i"** = isolated).

12. Verify API-DLN stream status (**OP:DLNCM;STREAM!**) [DLP-513].

13. At 3B MCRT, depress **NORM/DISP** (**PF2**) key and enter **1107** in command mode to obtain display Page 1107.

14. Ensure 1107 page display **ACT** for HDWR STATE and APPL STATE for two DLNs. Ensure MODE is **1WAY IN** and STREAM is **SCANIN** for one DLN; and MODE is **1WAY OUT** and STREAM is **SCANOUT** for other DLN.

15. At 3B MCRT, enter **OP:DLNCM,DLNMAP!.** Ensure DLN states in printout are same as indicated in 1107 page (Step 14).

VERIFY SYSTEM STATUS

[1] Determine number of growth link nodes, link node type, and number of signaling links to be added to each growth link node

[2] Determine order number for each growth link node [DLP-517]

[3] Contact CNI data base administrator to determine values for DMS fields in TABLE A for each growth link node

[4] At MCRT, enter message INH:AUD:NIDATA!

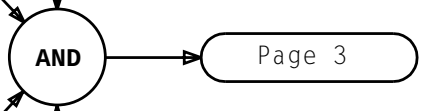

TABLE A

DCHAN	CCS7
CONTROL NODE LACID LINK TYPE MATE NODE MATE LINK	LINK SPEED ENCRYPTED FAR-END FUNCTION FAR-END CLLI LINK SET SIGNALING LINK CODE LINK TYPE ERROR CORRECTION MODE TRANSMISSION MEDIUM MATE GROUP – MEMBER COMBINED LINK SET FACILITY ACCESS TYPE LINK INTERFACE TYPE FAR-END POINT CODE LINKSET ASSOCIATED PC MAJOR STATE
See FIG. 1, Page 2	See FIG. 2, Page 2

POPULATE OFFICE-DEPENDENT LINK DATA FILES USING DATA BASE MANAGEMENT SYSTEM

ITEM: ____

GROUP - MEMBER: ___ - ___

LINK TYPE ID: ____

LI4 EQUIPAGE _____ CONTROL NODE __ - __

FACILITY ACCESS TYPE _____

	_____ li40 _____				_____ li41 _____			
	0	1	2	3	0	1	2	3
LACID								
LINK SPEED								
LINK TYPE								
MATE NODE								
MATE LINK								
MAJOR STATE								

FIG. 1 — Sample of DCHAN Form

ITEM: ____

GROUP - MEMBER: ___ - ___

LINK TYPE ID: ____

LINK SPEED	_____	TRANSMISSION MEDIUM	_____
ENCRYPTED	____	MATE GROUP - MEMBER	___ - ___
FAR END FUNCTION	_____	COMBINED LINK SET	____
FAR END CLLI*	_____	FACILITY ACCESS TYPE	_____
LINK SET	____	LINK INTERFACE TYPE	____
SIGNALLING LINK CODE	___	FAR END POINT CODE	_____
LINK TYPE	__	LINKSET ASSOCIATED PC	_____
ERROR CORRECTION	_____	MAJOR STATE	_____

* COMMON LANGUAGE IS A REGISTERED TRADEMARK AND CLEI, CLLI, AND CLFI ARE TRADEMARKS OF BELL COMMUNICATIONS RESEARCH, INC.

FIG. 2 — Sample of CCS7 Form

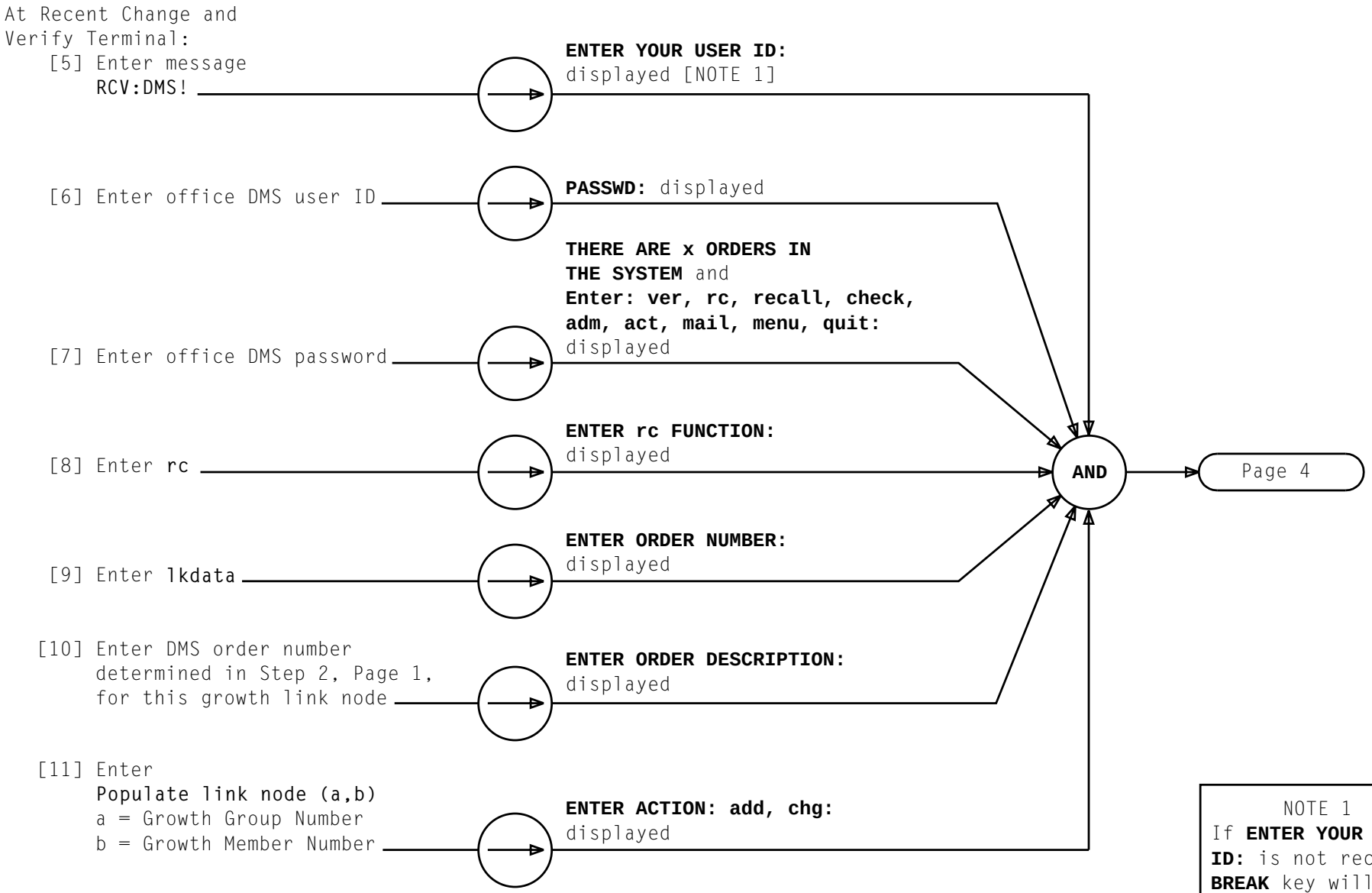

NOTE 1
If **ENTER YOUR USER ID:** is not received, **BREAK** key will have to be depressed

POPULATE OFFICE-DEPENDENT LINK DATA FILES USING DATA BASE MANAGEMENT SYSTEM

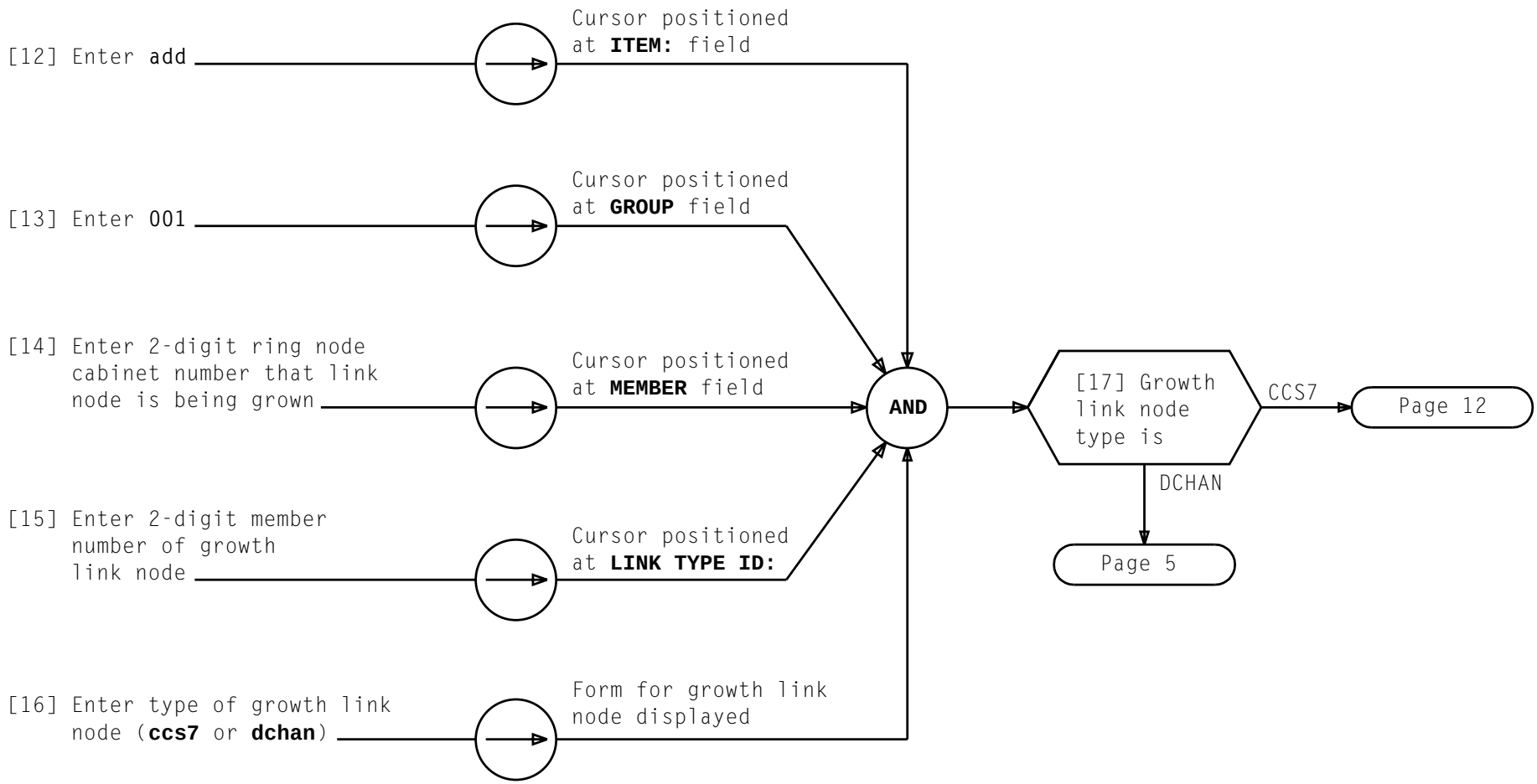

POPULATE OFFICE-DEPENDENT LINK DATA FILES USING DATA BASE MANAGEMENT SYSTEM

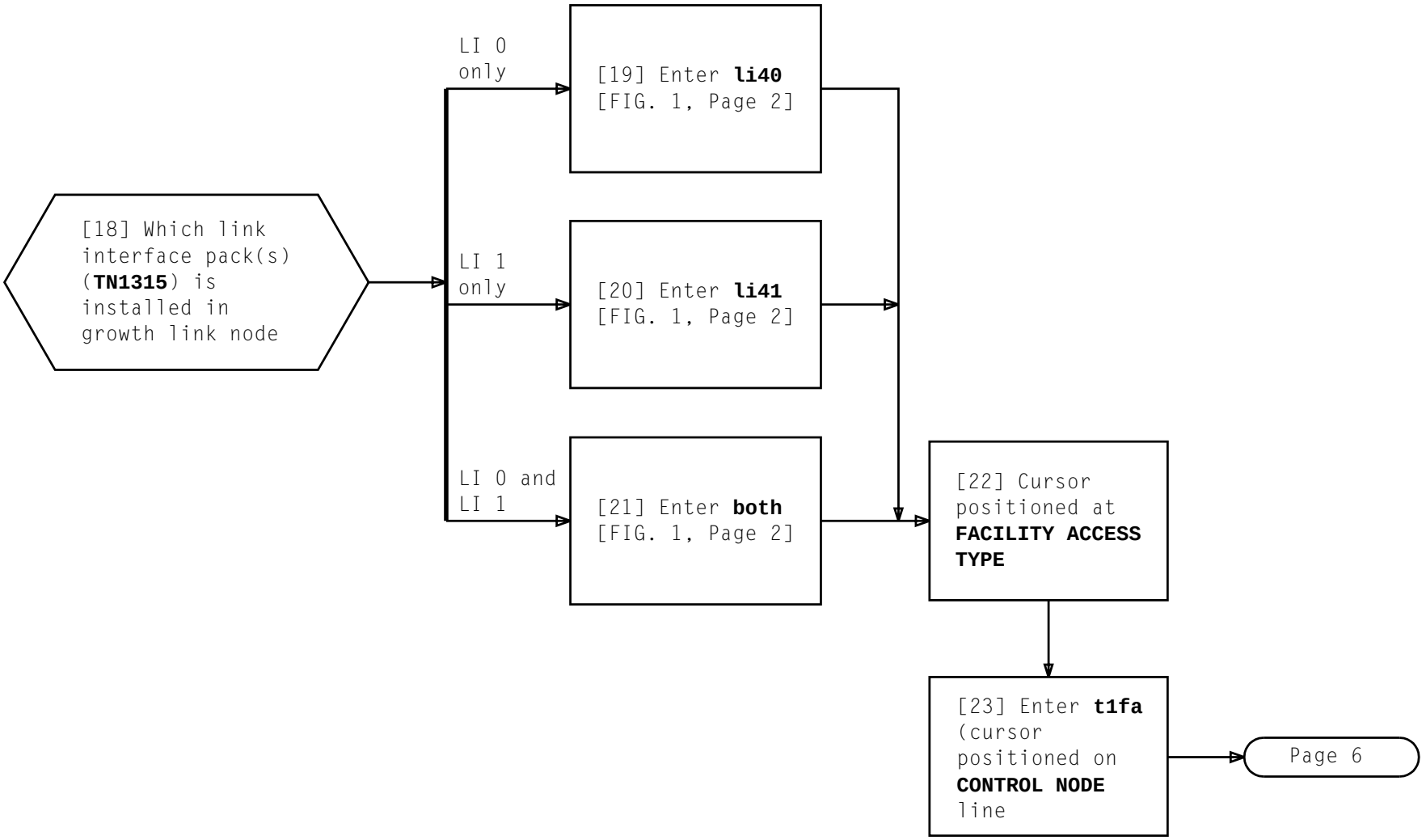

POPULATE OFFICE-DEPENDENT LINK DATA FILES USING DATA BASE MANAGEMENT SYSTEM

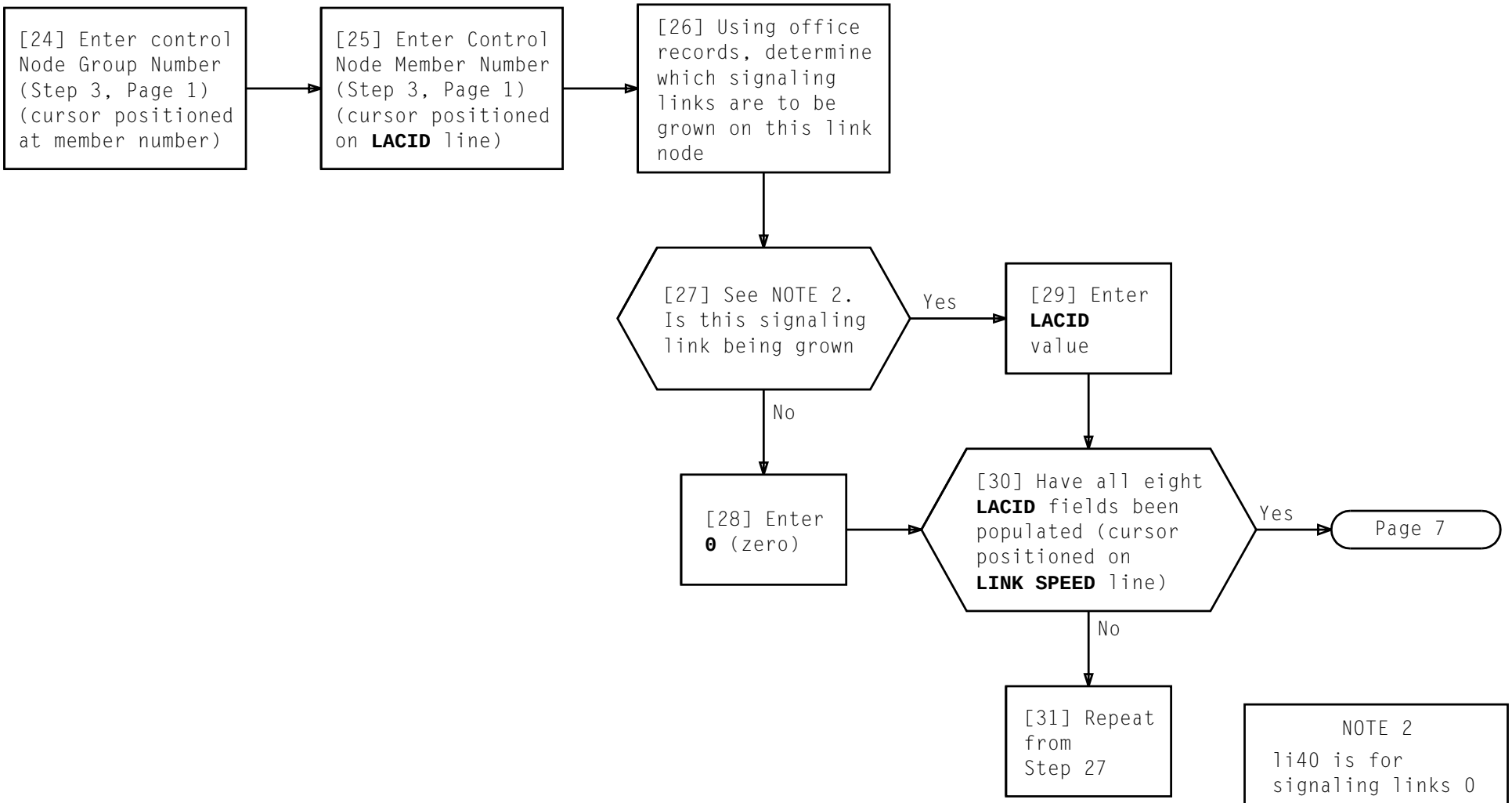

NOTE 2

li40 is for signaling links 0 through 3 on link interface pack 0, and li41 is for signaling links 0 through 3 on link interface pack 1

POPULATE OFFICE-DEPENDENT LINK DATA FILES USING DATA BASE MANAGEMENT SYSTEM

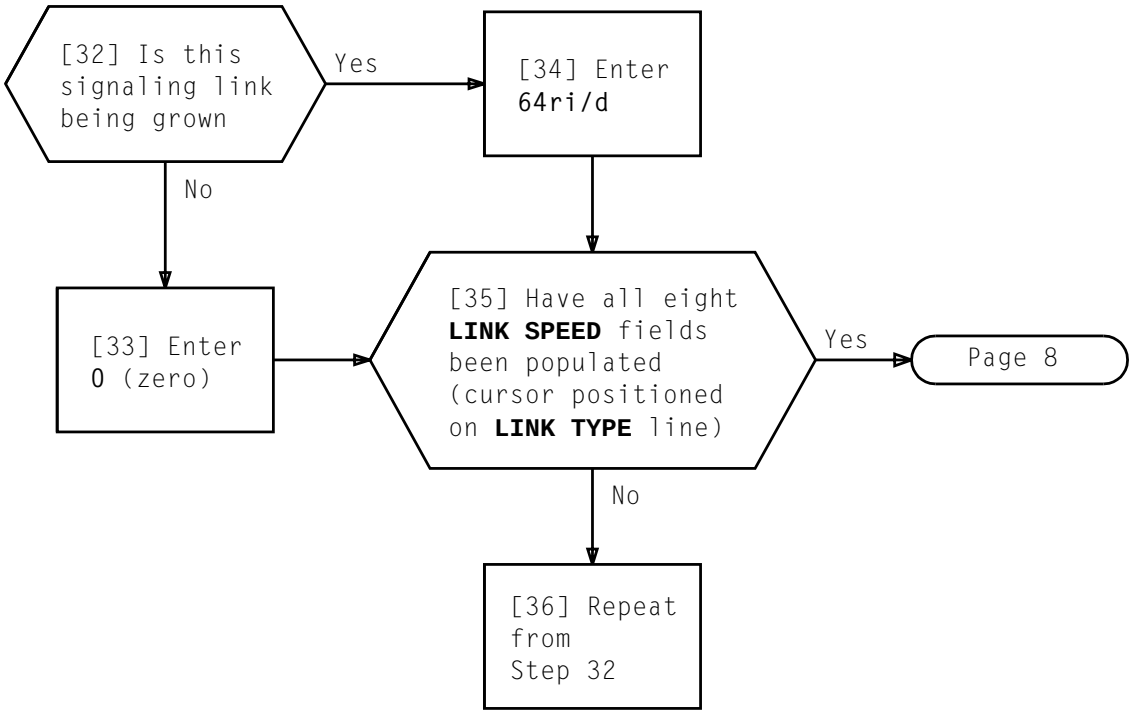

POPULATE OFFICE-DEPENDENT LINK DATA FILES USING DATA BASE MANAGEMENT SYSTEM

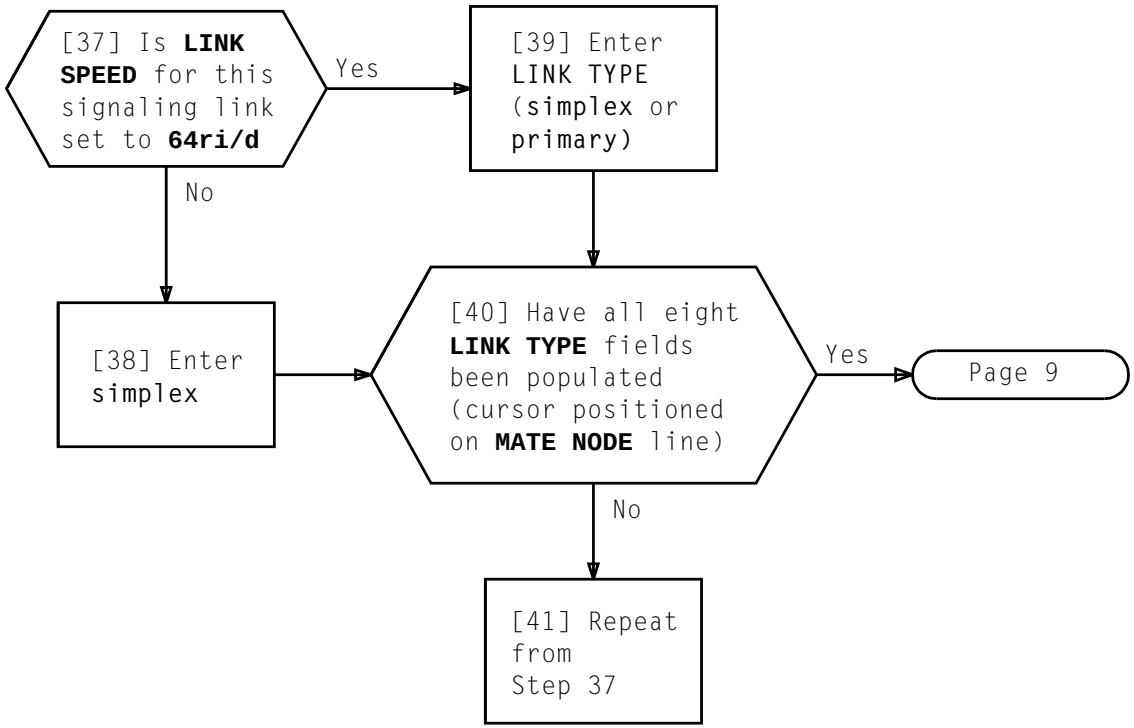

POPULATE OFFICE-DEPENDENT LINK DATA FILES USING DATA BASE MANAGEMENT SYSTEM

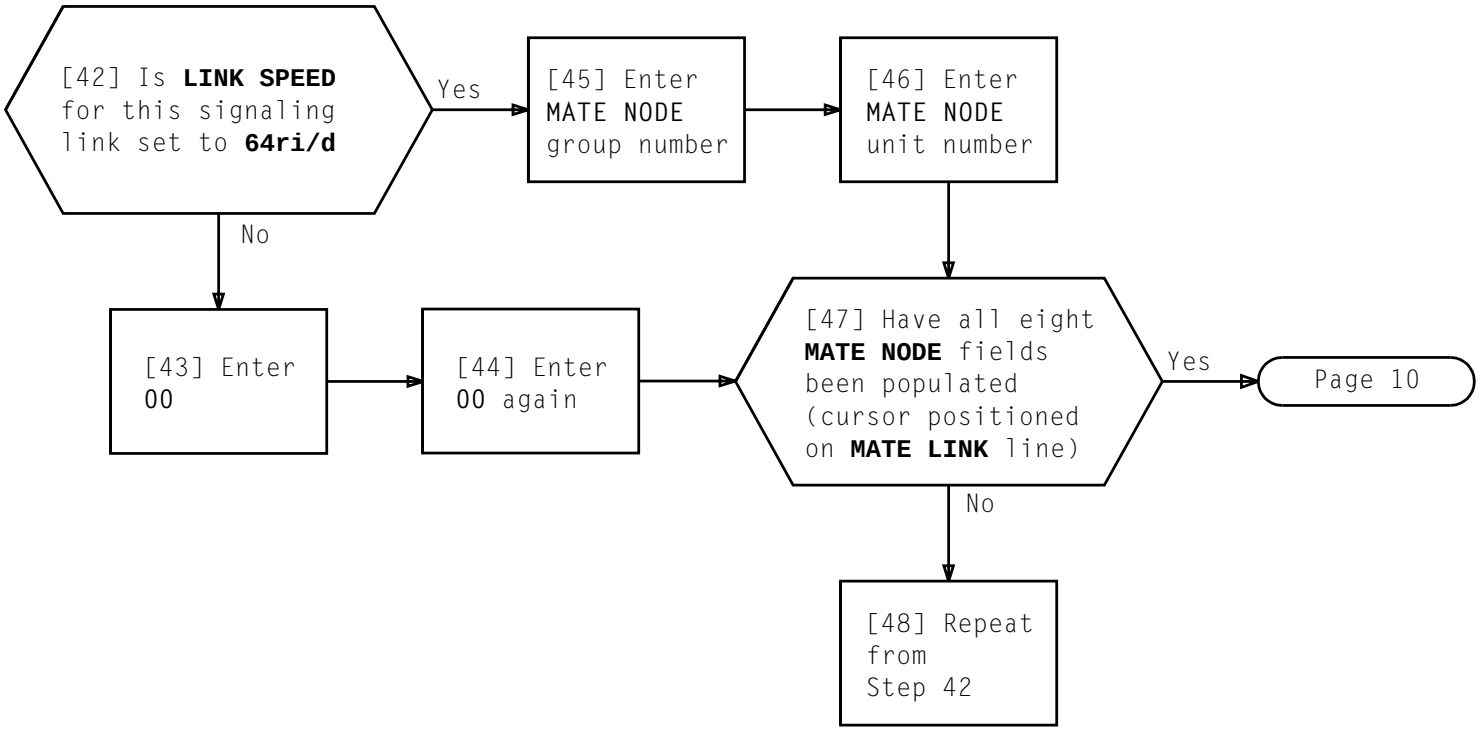

POPULATE OFFICE-DEPENDENT LINK DATA FILES USING DATA BASE MANAGEMENT SYSTEM

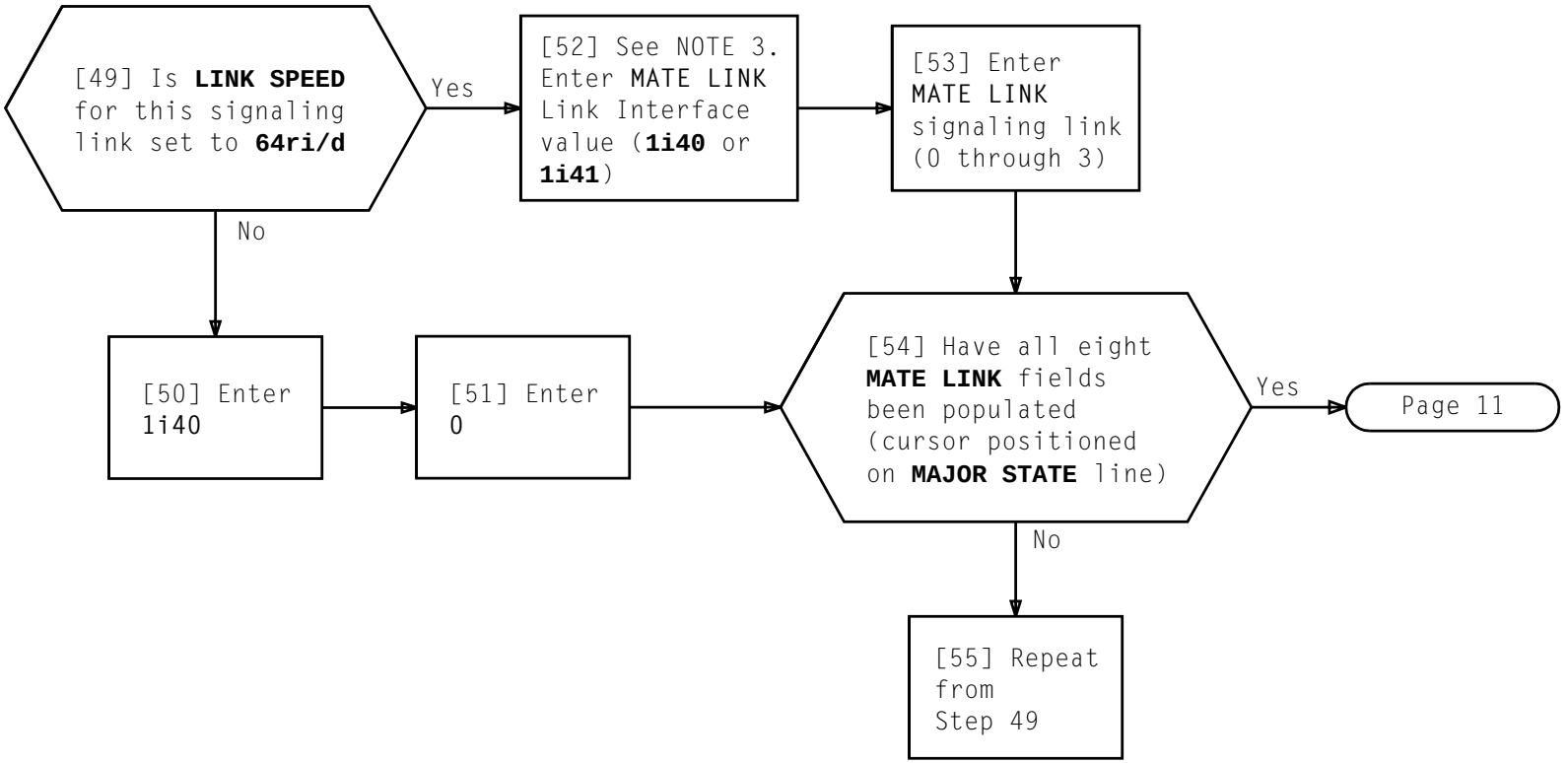

NOTE 3
1i40 is for signaling links 0 through 3 on link interface pack 0, and 1i41 is for signaling links 0 through 3 on link interface pack 1

POPULATE OFFICE-DEPENDENT LINK DATA FILES USING DATA BASE MANAGEMENT SYSTEM

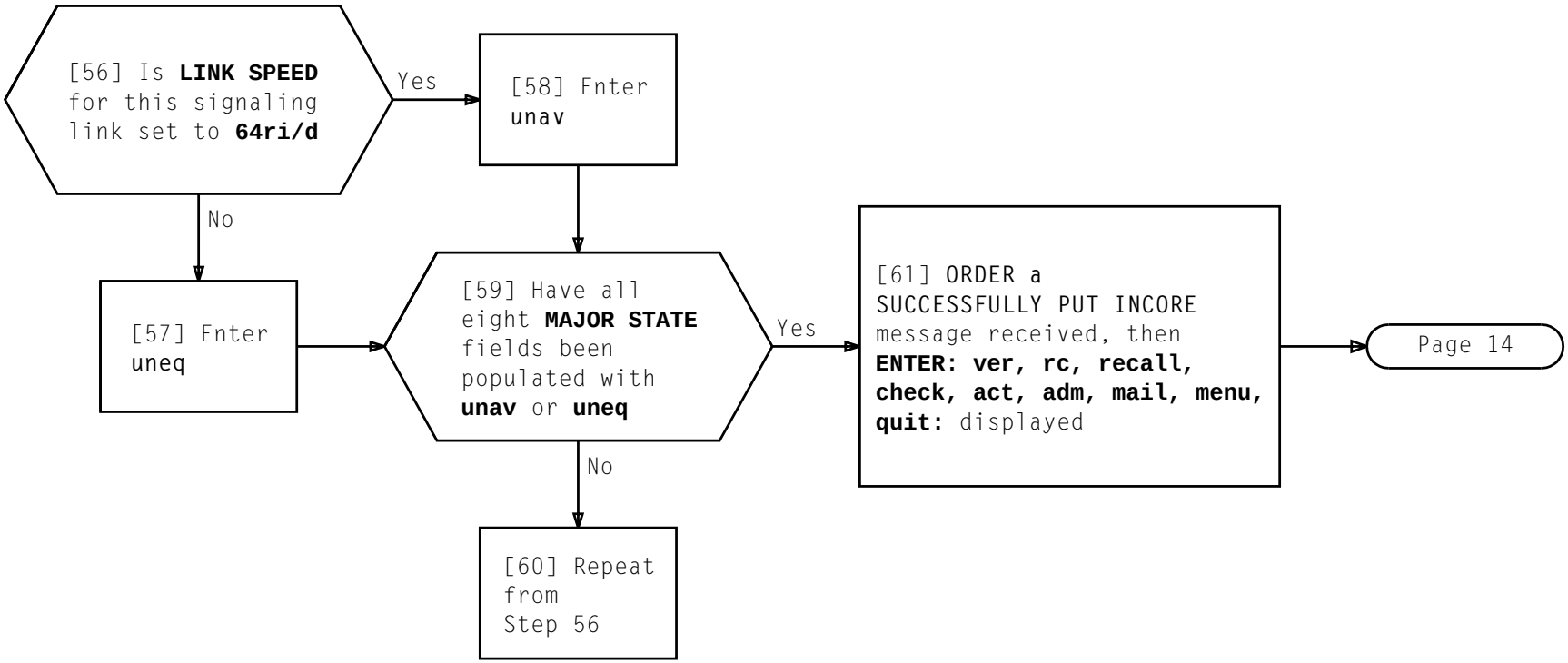

POPULATE OFFICE-DEPENDENT LINK DATA FILES USING DATA BASE MANAGEMENT SYSTEM

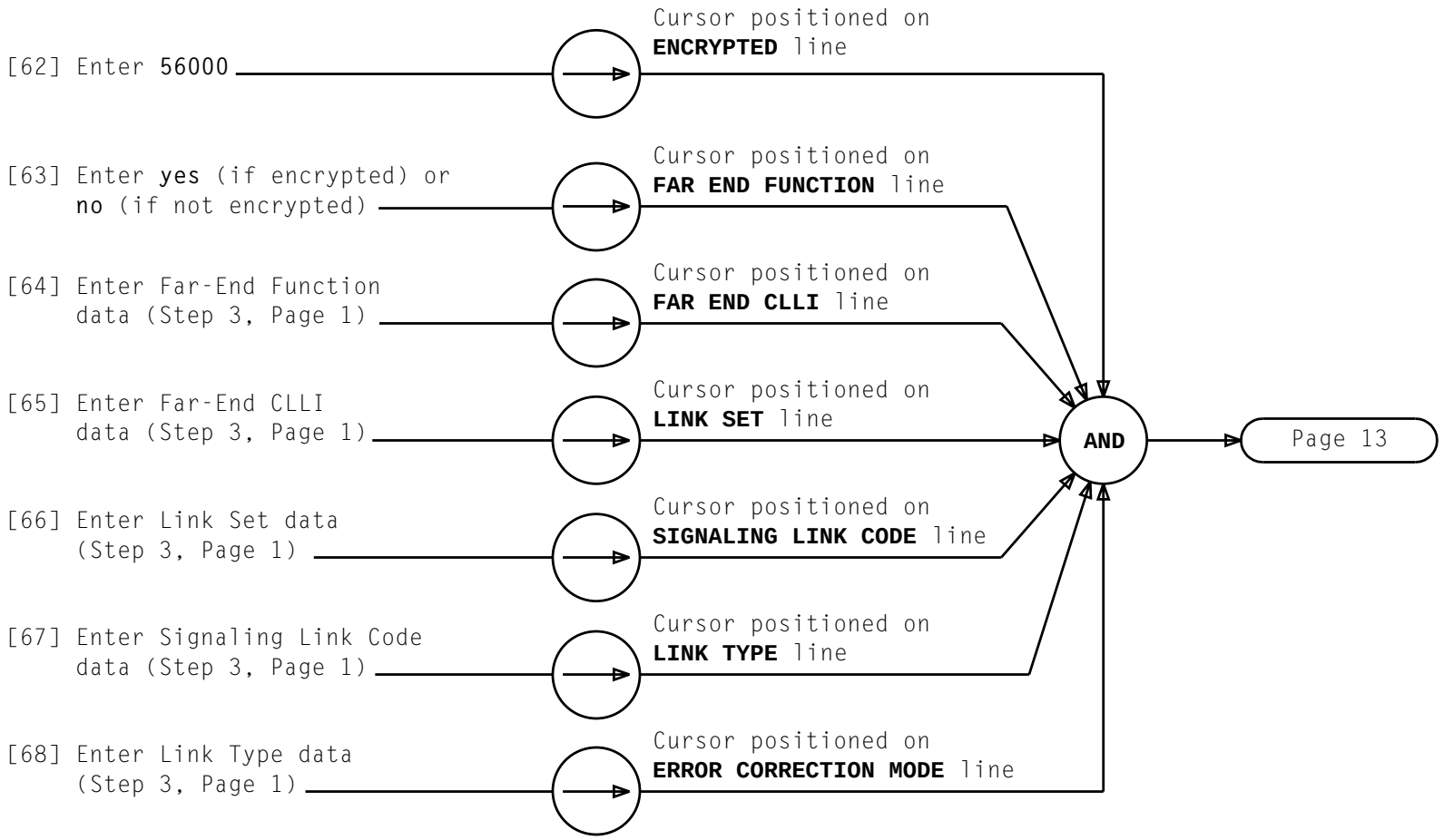

POPULATE OFFICE-DEPENDENT LINK DATA FILES USING DATA BASE MANAGEMENT SYSTEM

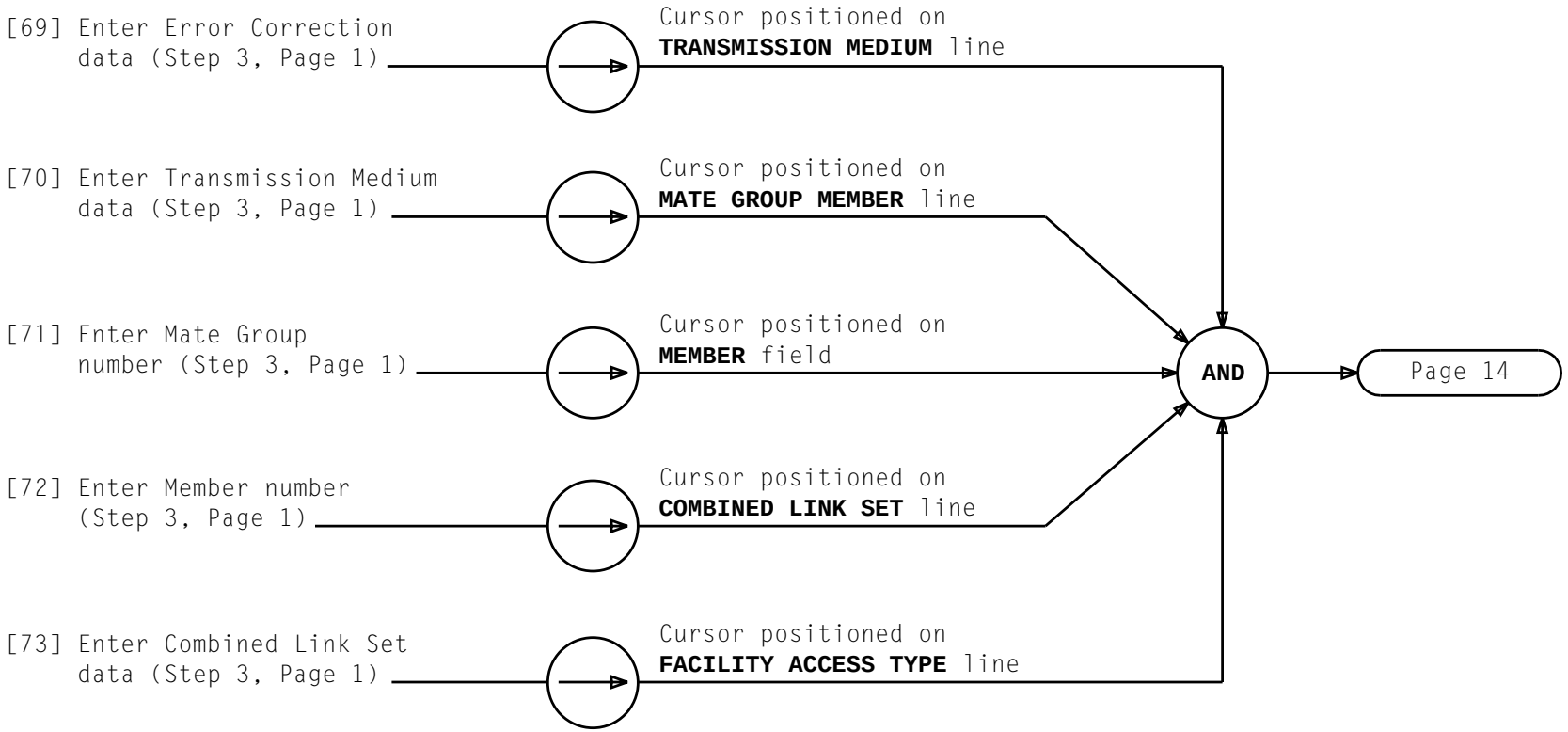

POPULATE OFFICE-DEPENDENT LINK DATA FILES USING DATA BASE MANAGEMENT SYSTEM

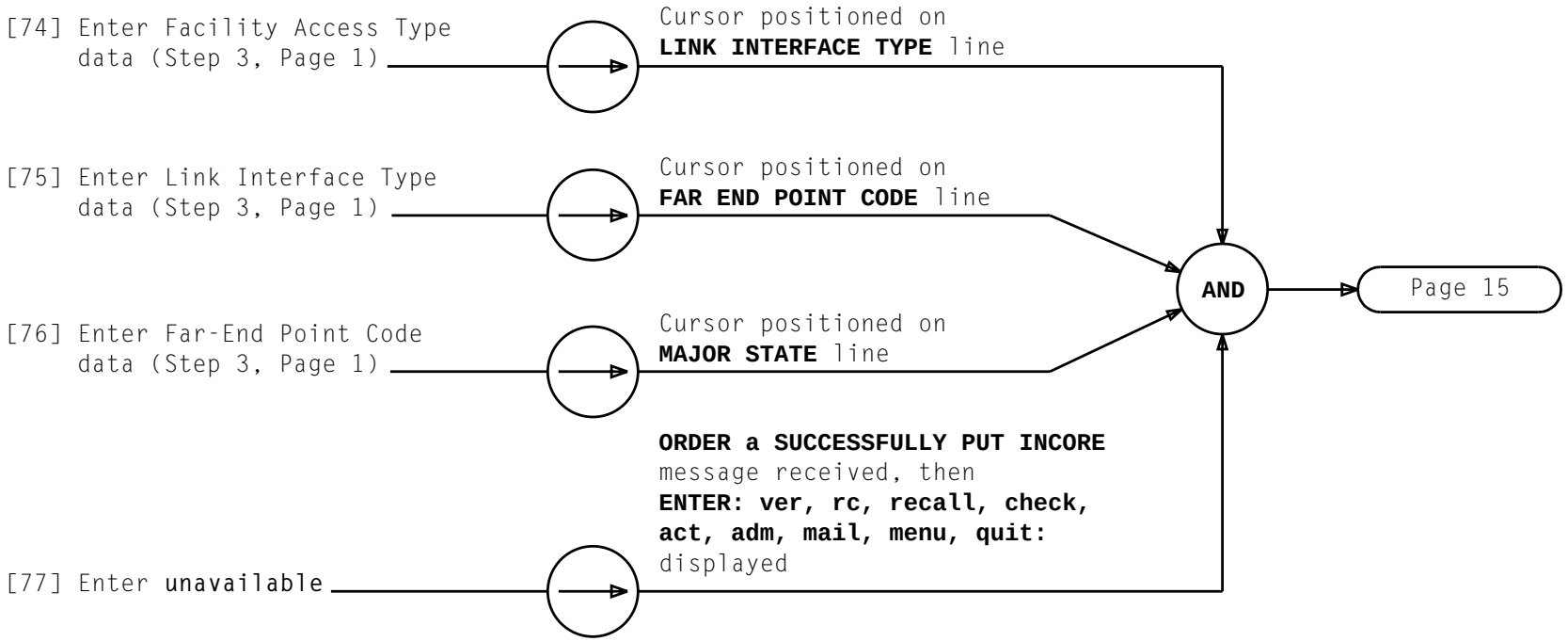

POPULATE OFFICE-DEPENDENT LINK DATA FILES USING DATA BASE MANAGEMENT SYSTEM

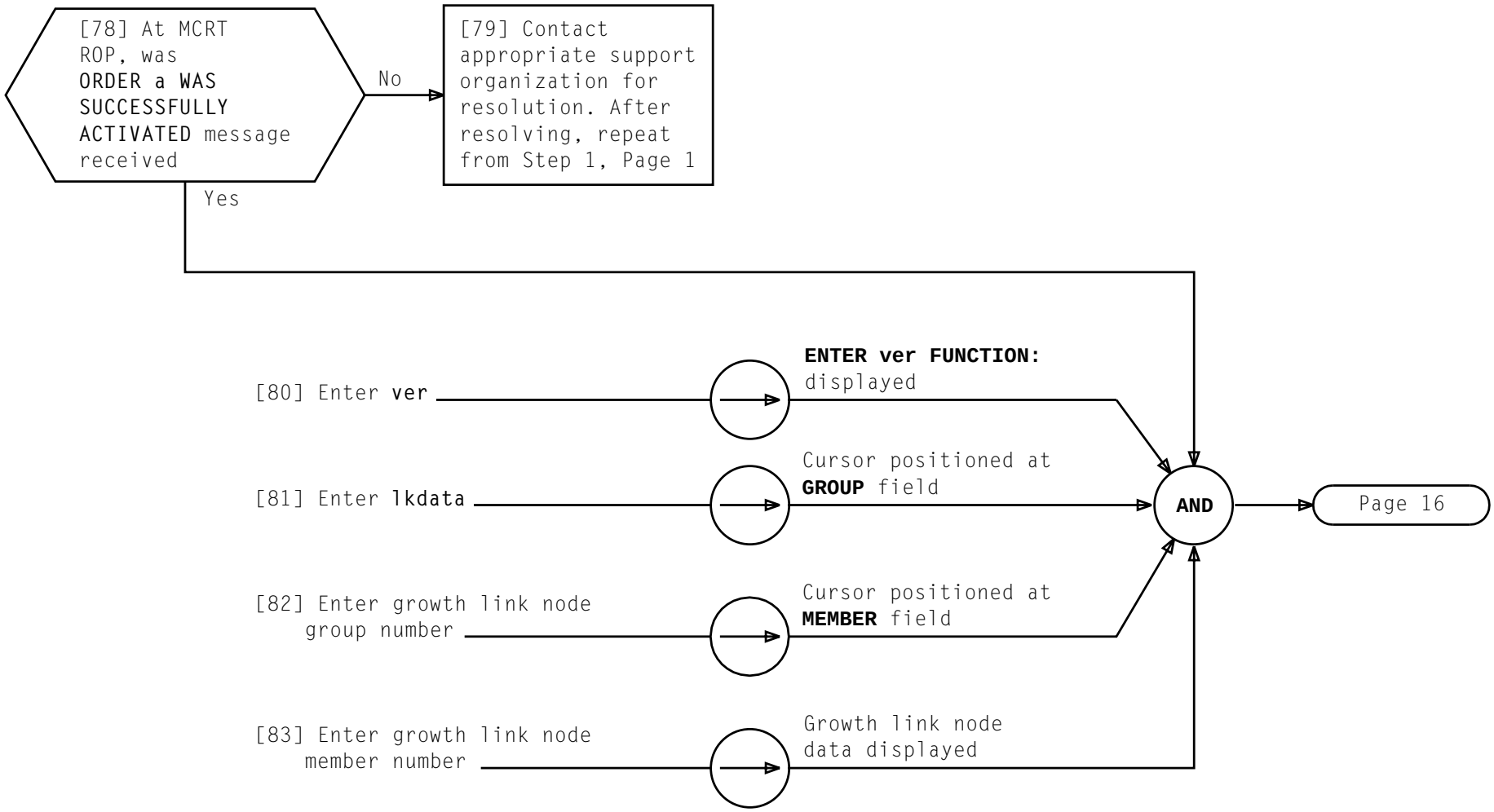

POPULATE OFFICE-DEPENDENT LINK DATA FILES USING DATA BASE MANAGEMENT SYSTEM

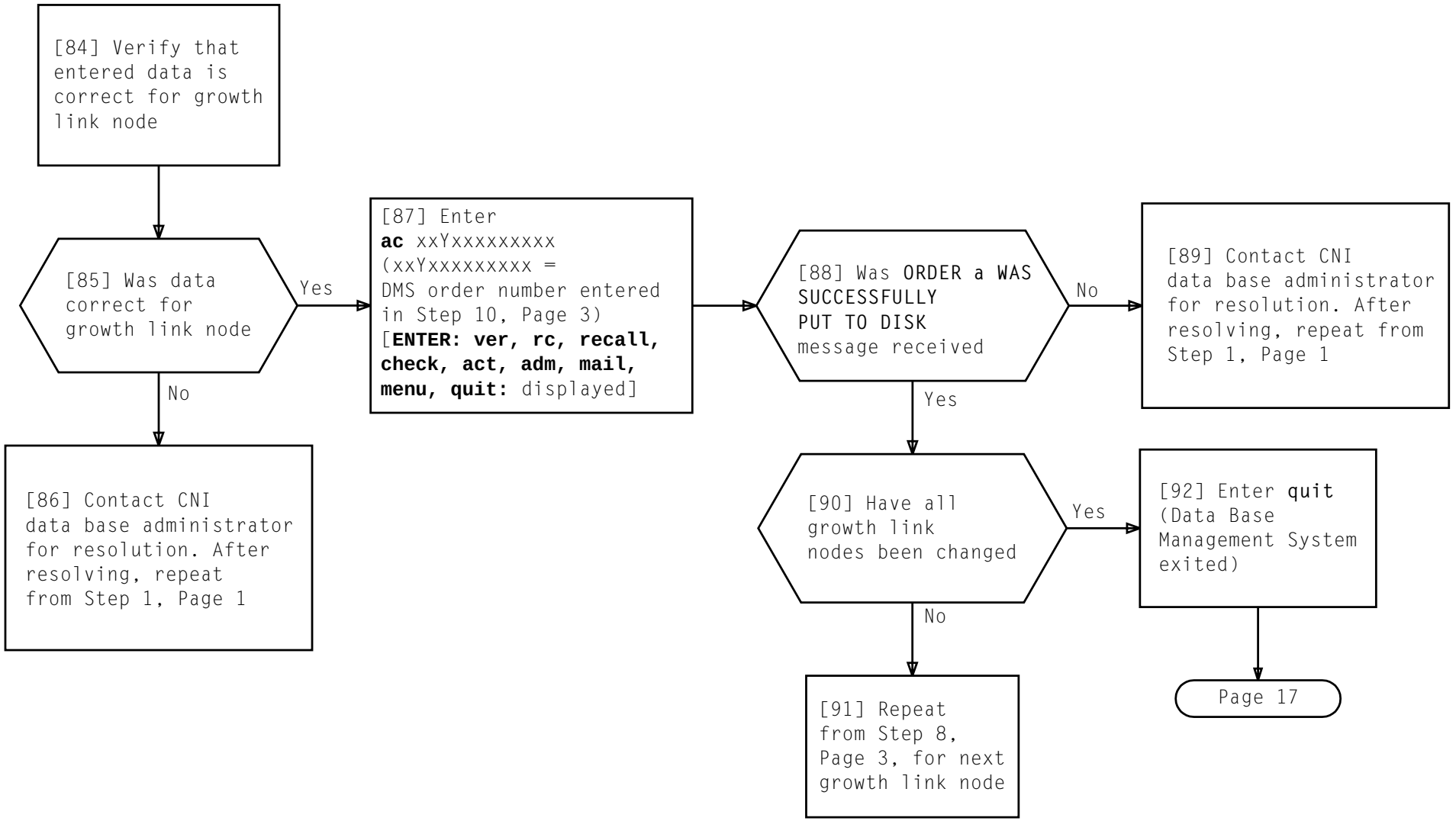

POPULATE OFFICE-DEPENDENT LINK DATA FILES USING DATA BASE MANAGEMENT SYSTEM

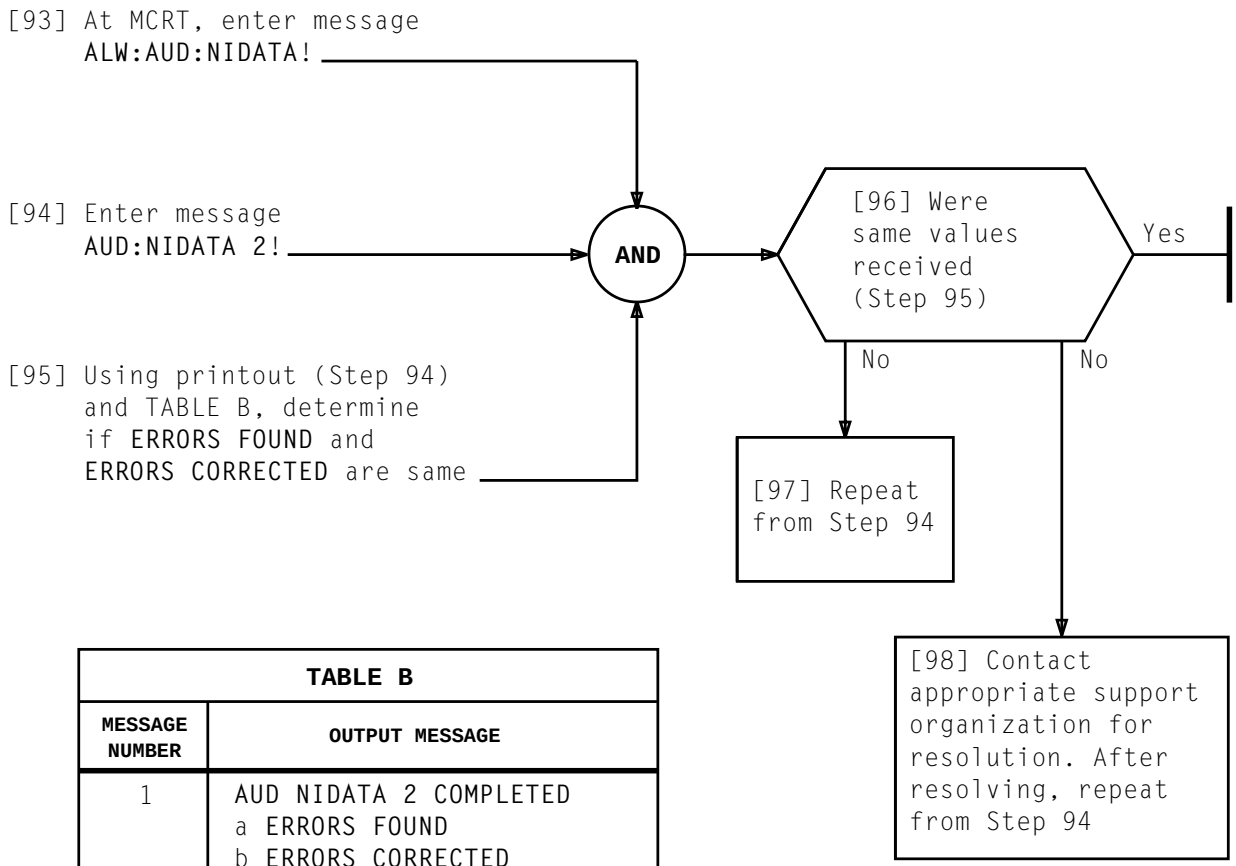

TABLE B

MESSAGE NUMBER	OUTPUT MESSAGE
1	AUD NIDATA 2 COMPLETED a ERRORS FOUND b ERRORS CORRECTED

a = Total number of errors found
b = Total number of errors corrected

POPULATE OFFICE-DEPENDENT LINK DATA FILES USING DATA BASE MANAGEMENT SYSTEM

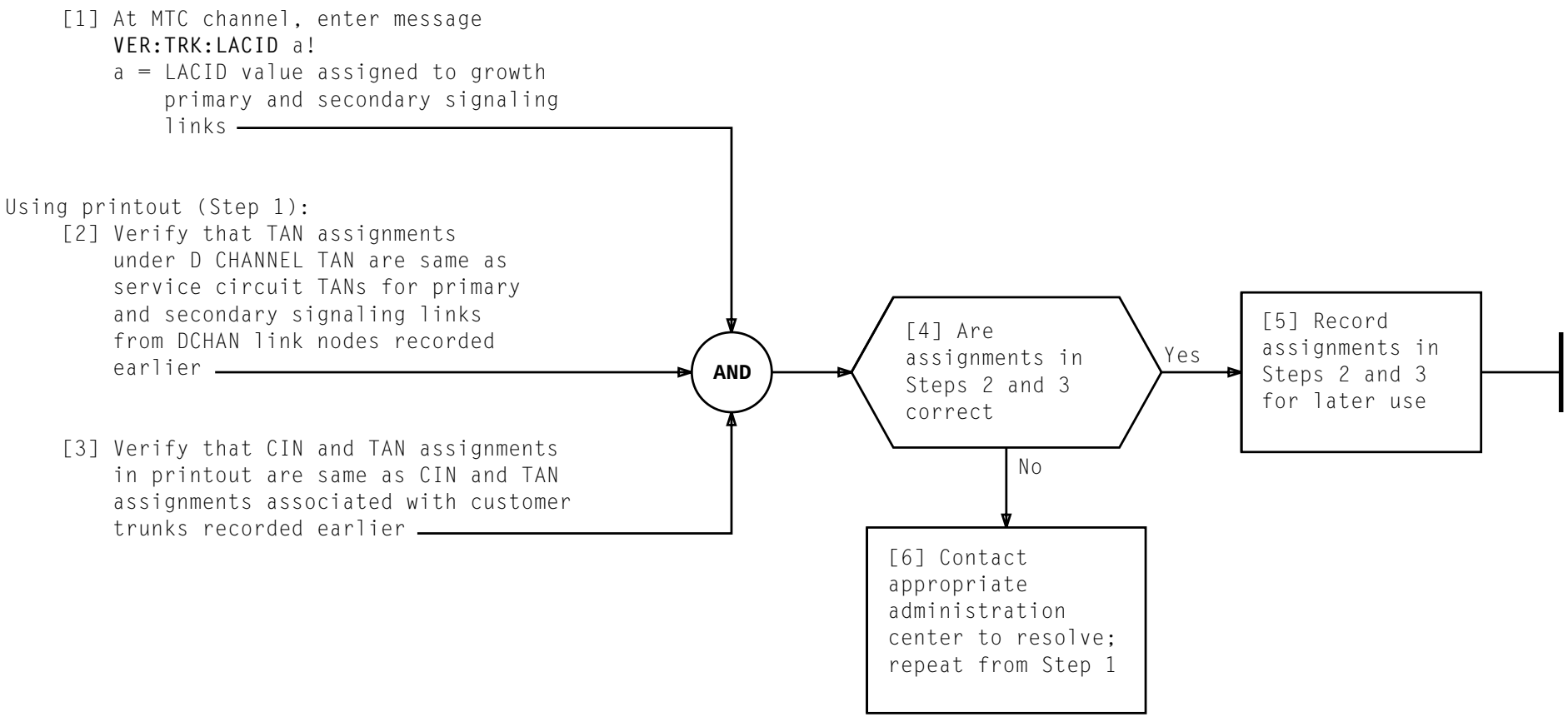

VERIFY CIN AND TAN ASSIGNMENTS FOR DCHAN SIGNALING LINK PAIR

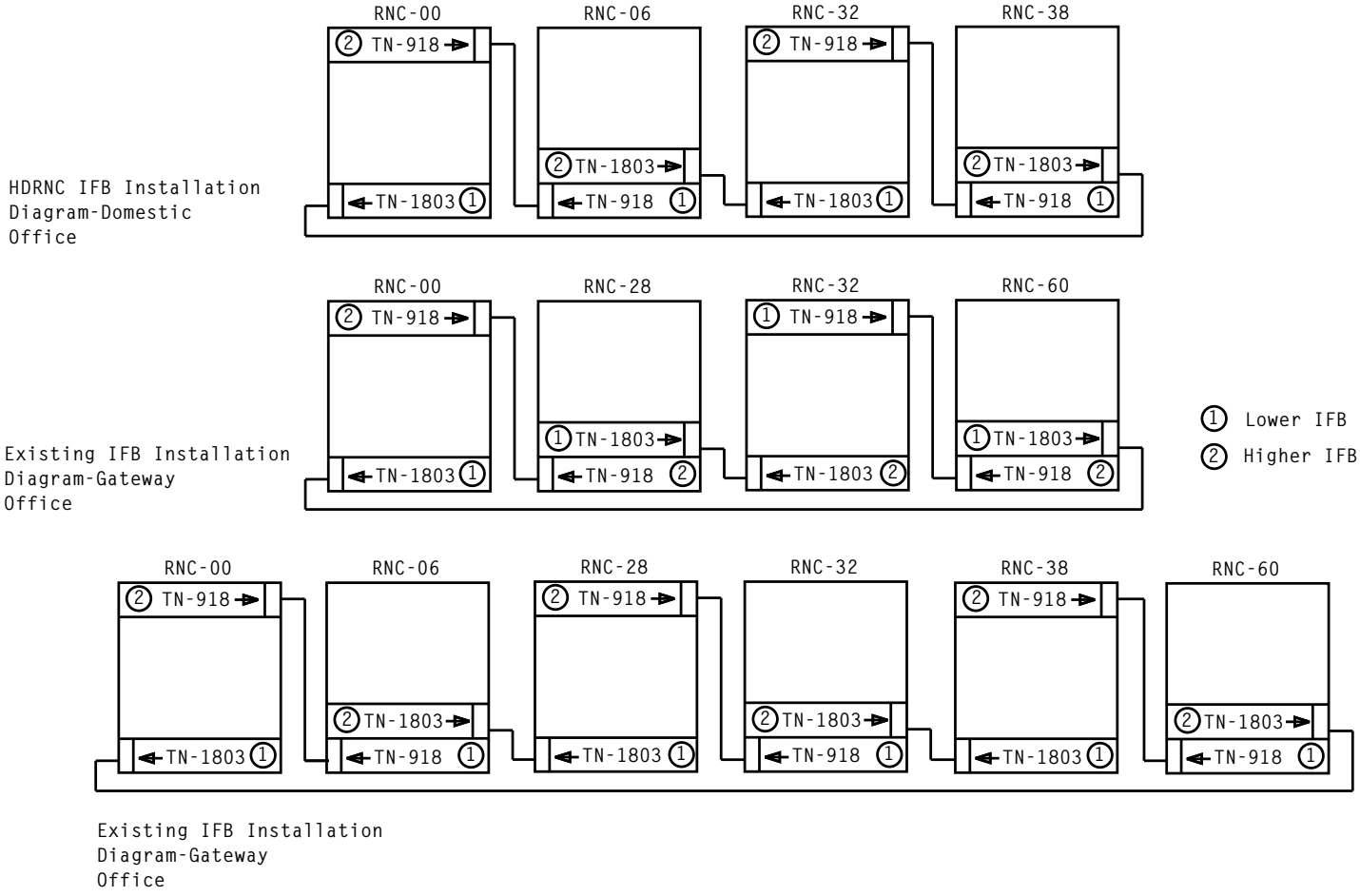

FIG. 1 — Ring Cabinets Configurations

RING CABINETS CONFIGURATIONS

Issue 6	SEP 1998
234-153-055	DLP
PAGE 1 of 1	545

CHANGE SECONDARY SIGNALING LINK TO UNEQ

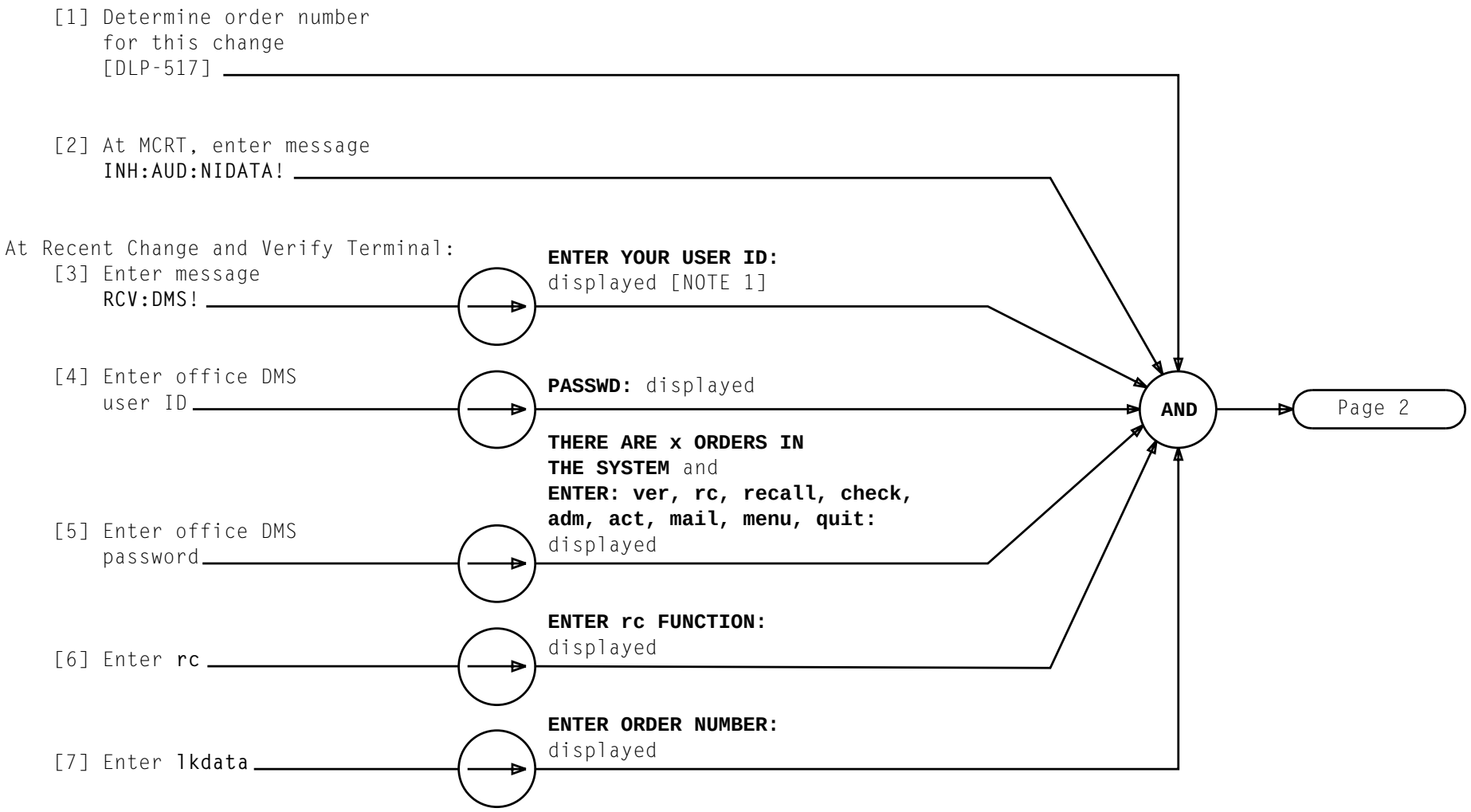

NOTE 1
If **ENTER YOUR USER ID:** is not received, **BREAK** key will have to be depressed

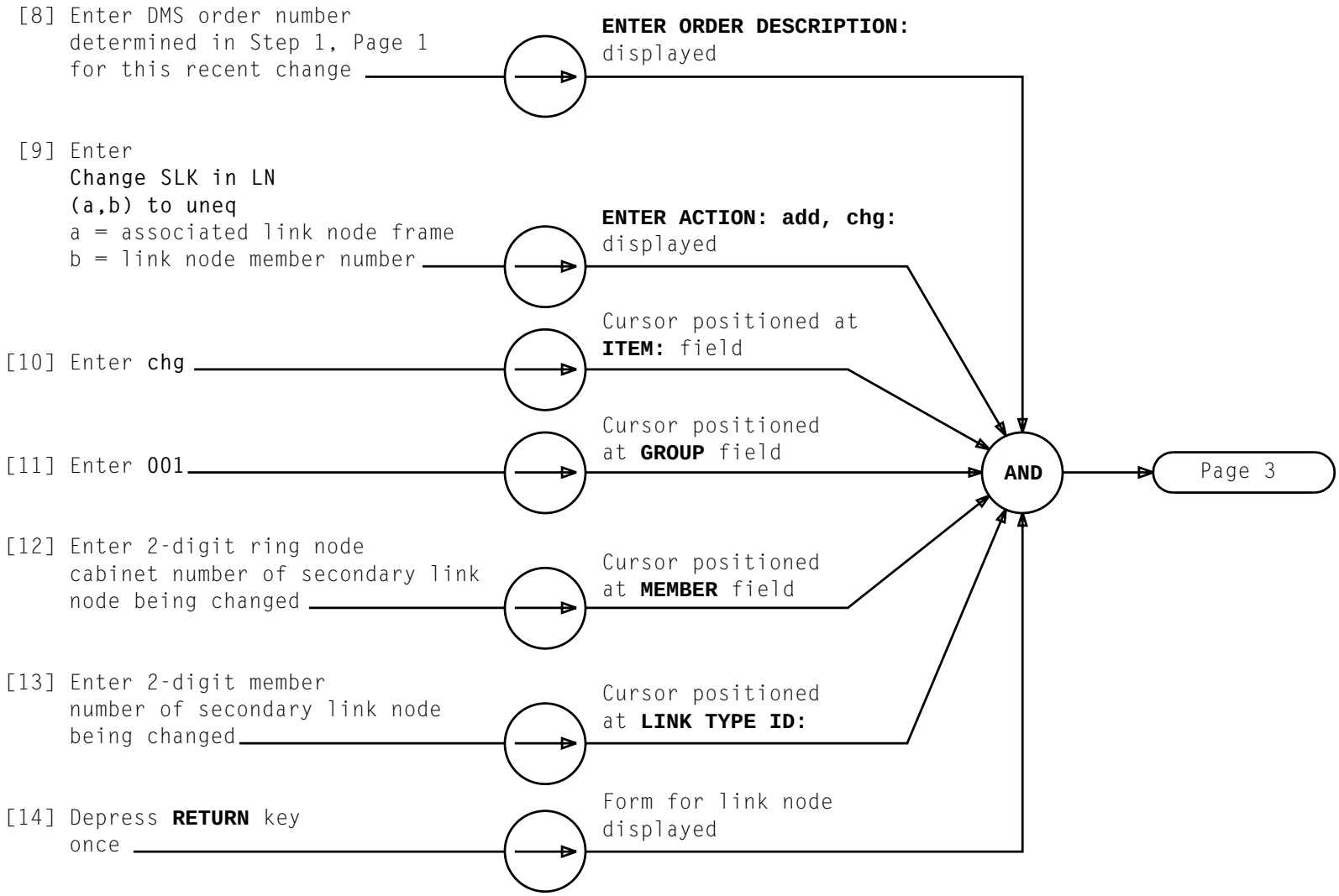

CHANGE SECONDARY SIGNALING LINK TO UNEQ

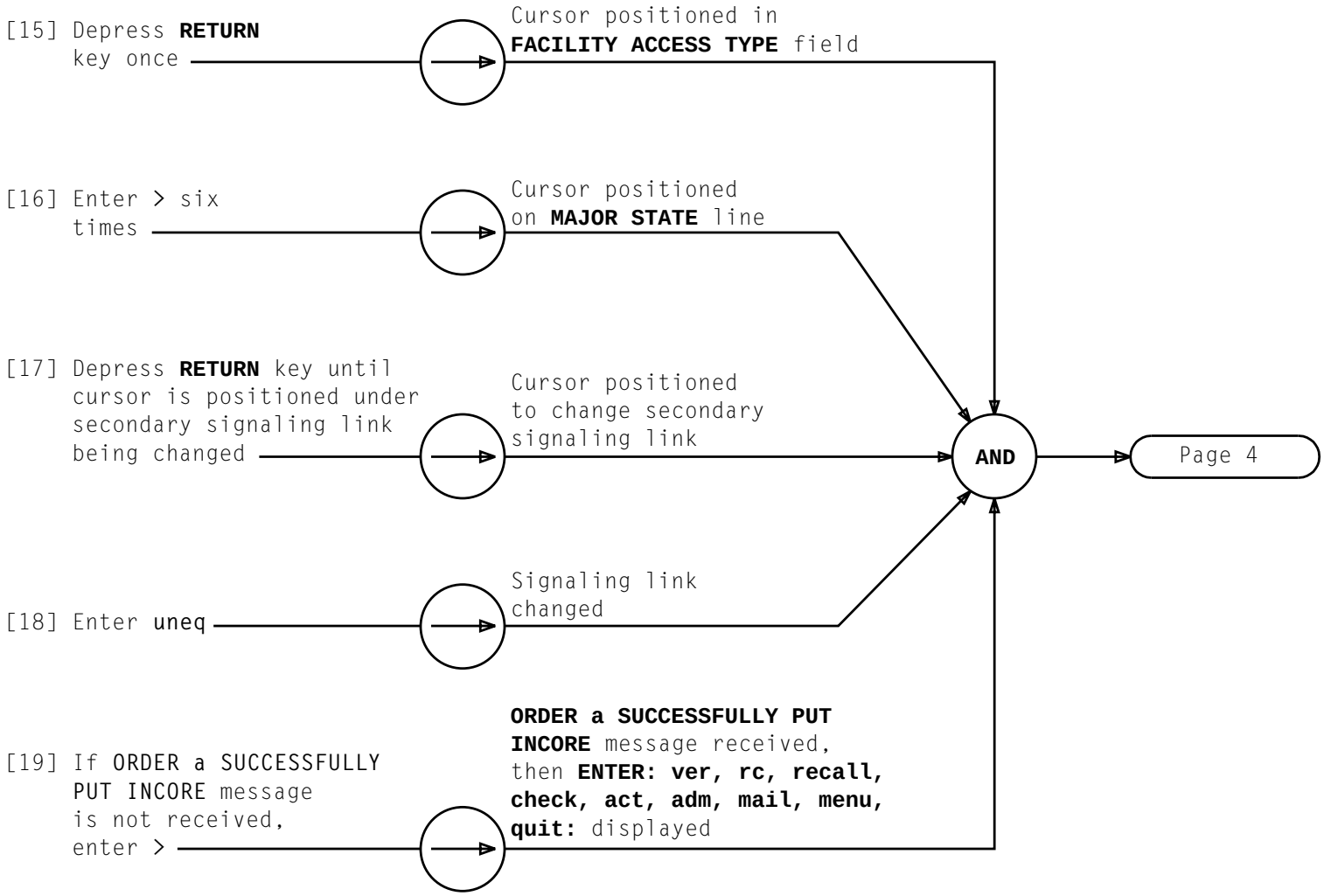

CHANGE SECONDARY SIGNALING LINK TO UNEQ

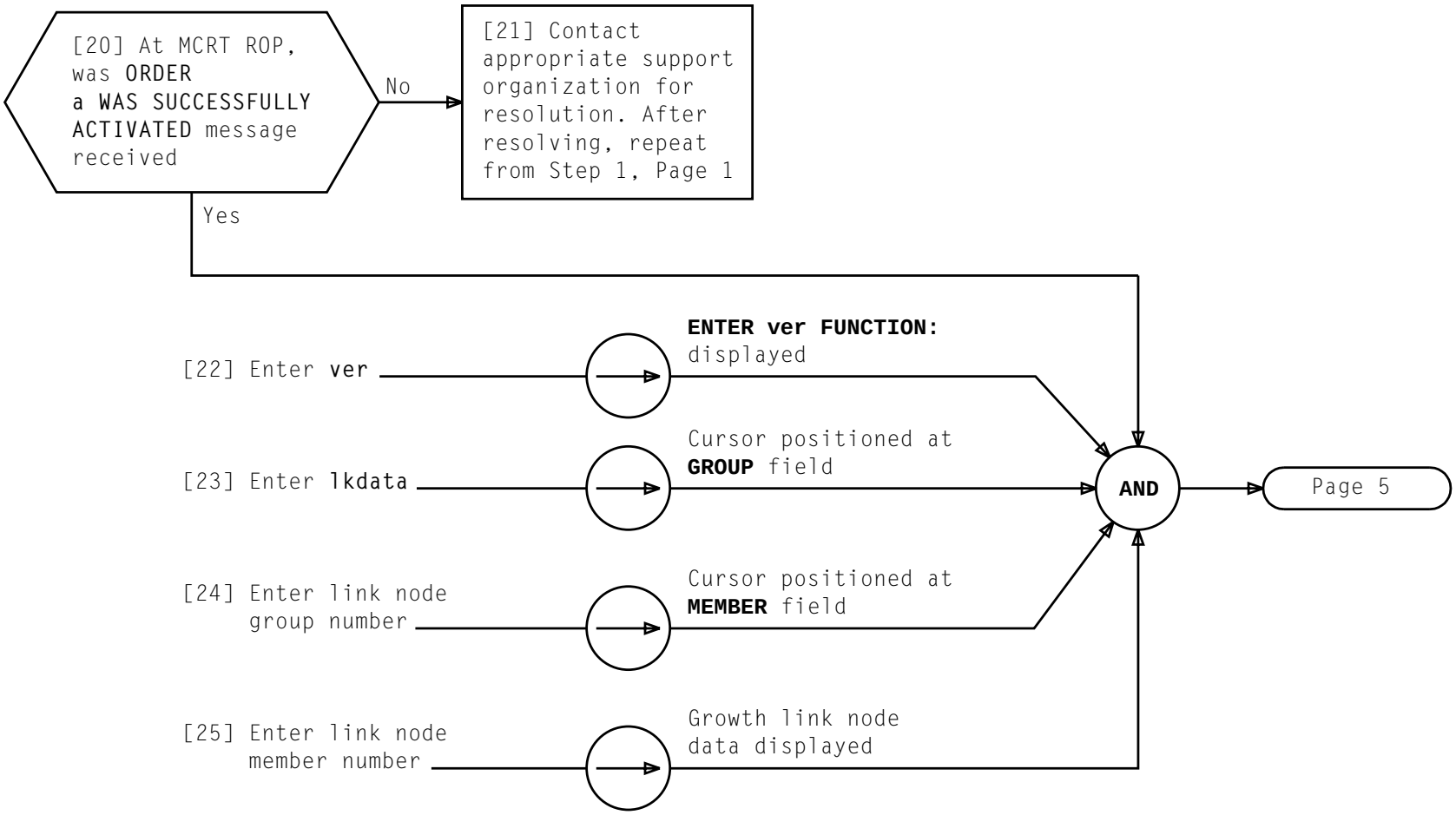

CHANGE SECONDARY SIGNALING LINK TO UNEQ

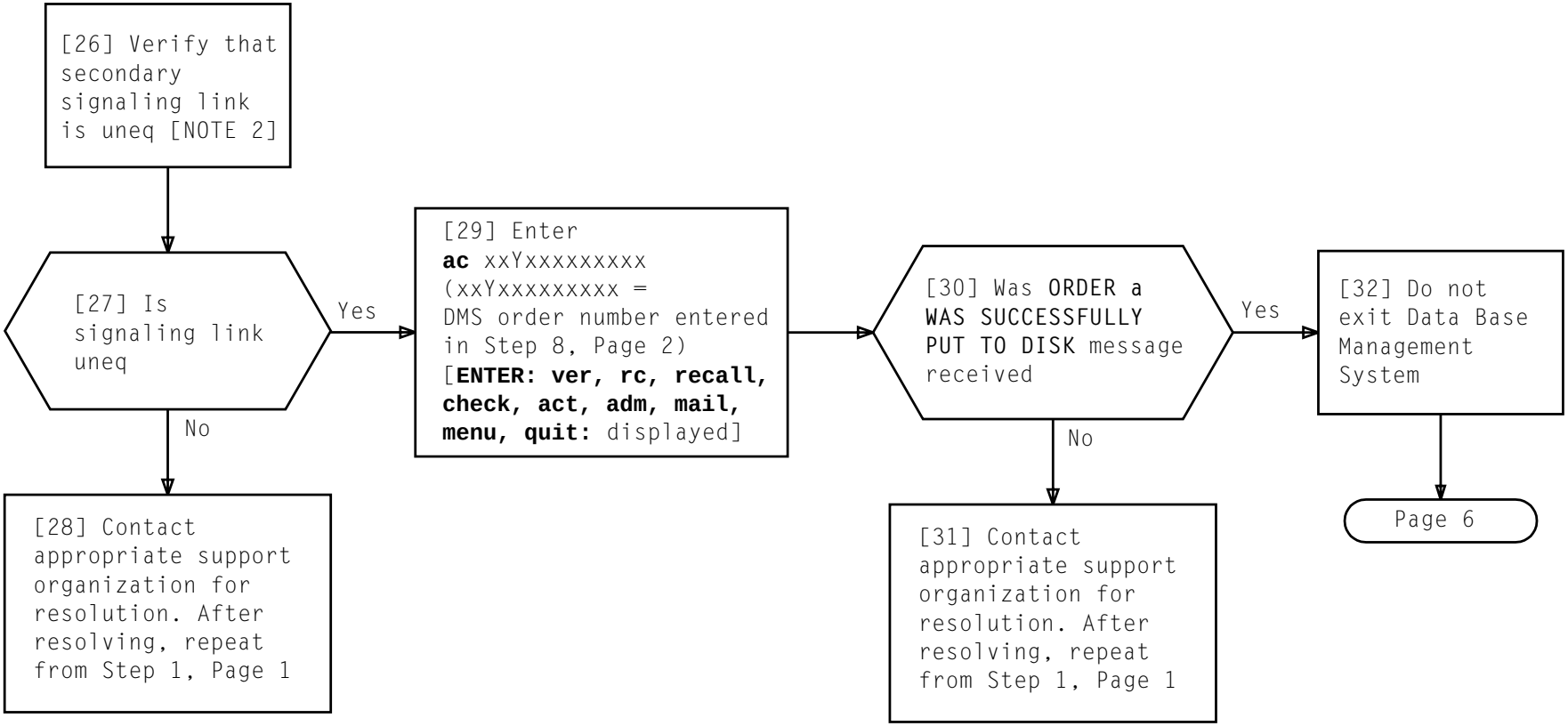

NOTE 2
Any LINK SPEED that was populated will be set to 0 when signaling link is set to uneq

CHANGE SECONDARY SIGNALING LINK TO UNEQ

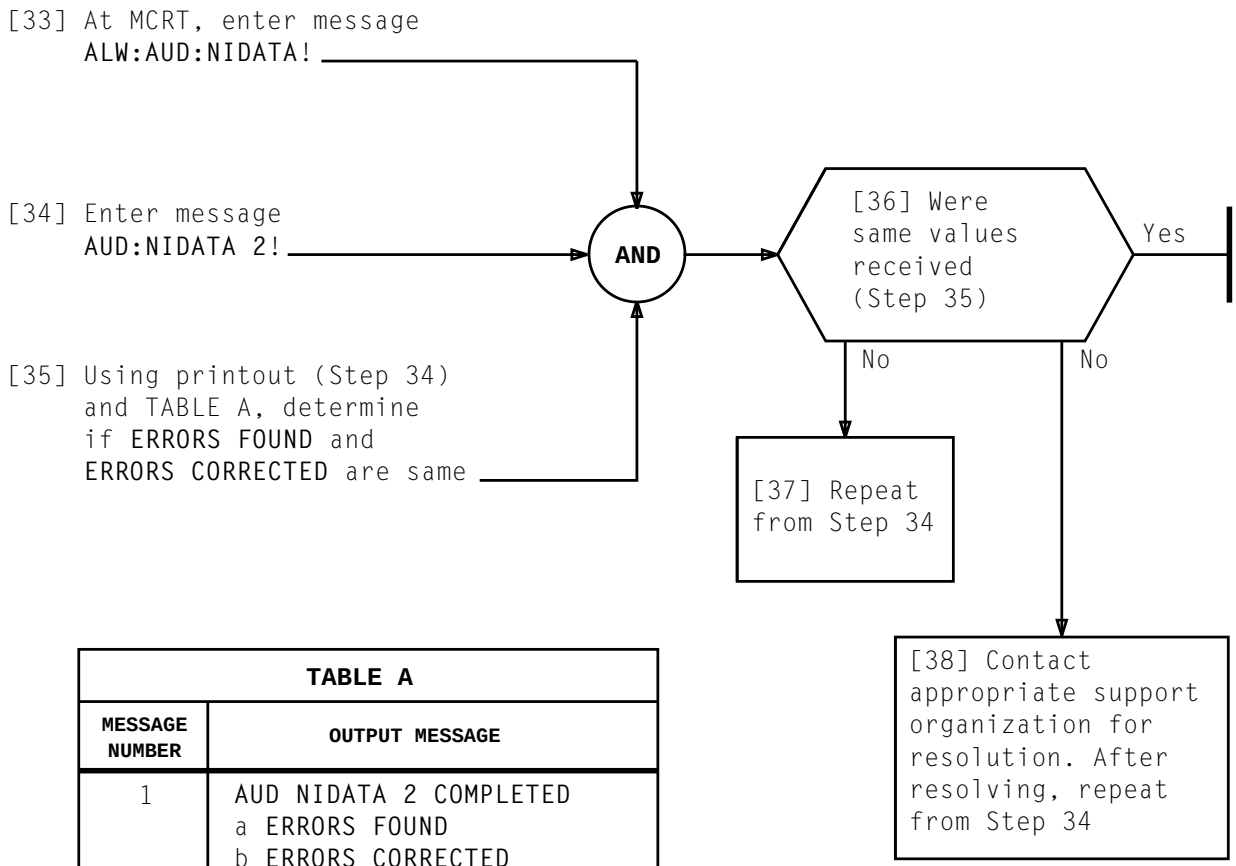

TABLE A

MESSAGE NUMBER	OUTPUT MESSAGE
1	AUD NIDATA 2 COMPLETED a ERRORS FOUND b ERRORS CORRECTED

a = Total number of errors found
b = Total number of errors corrected

CHANGE SECONDARY SIGNALING LINK TO UNEQ

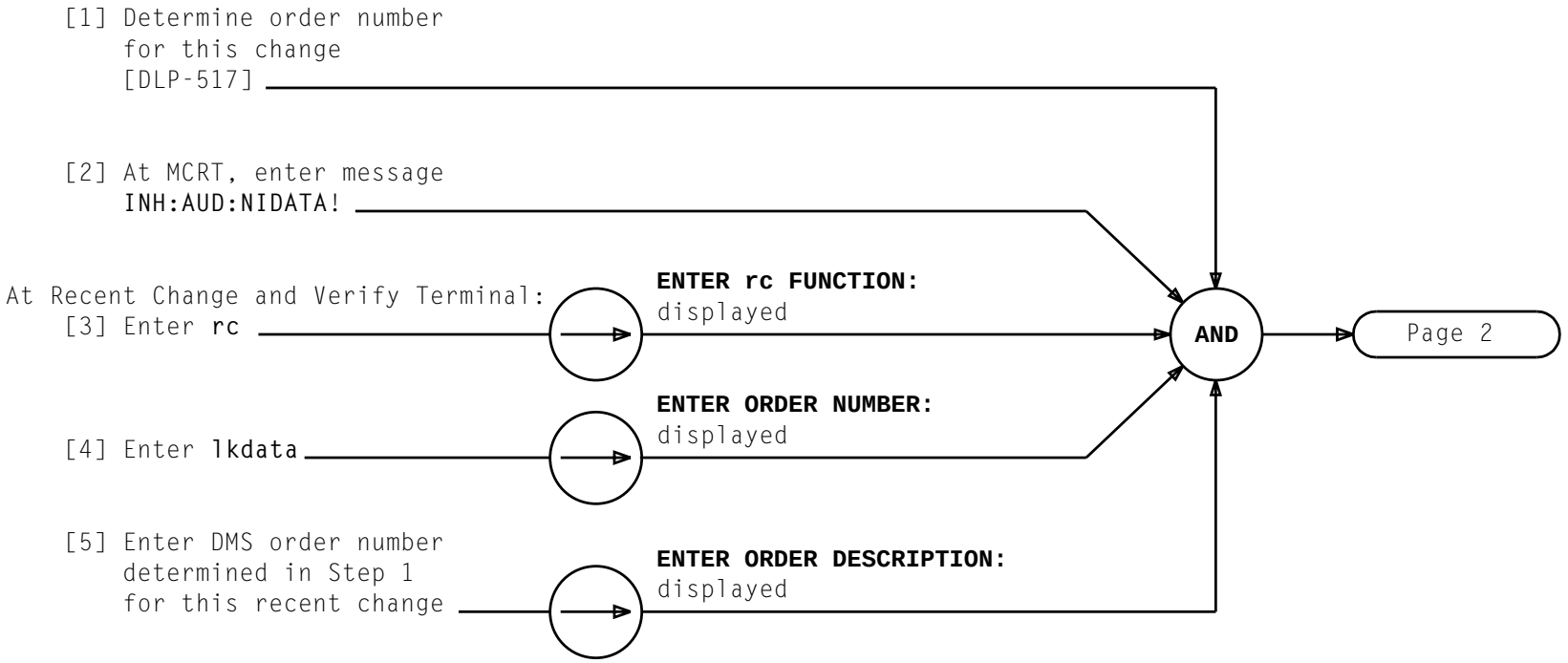

CHANGE SECONDARY SIGNALING LINK TO INITIAL VALUES

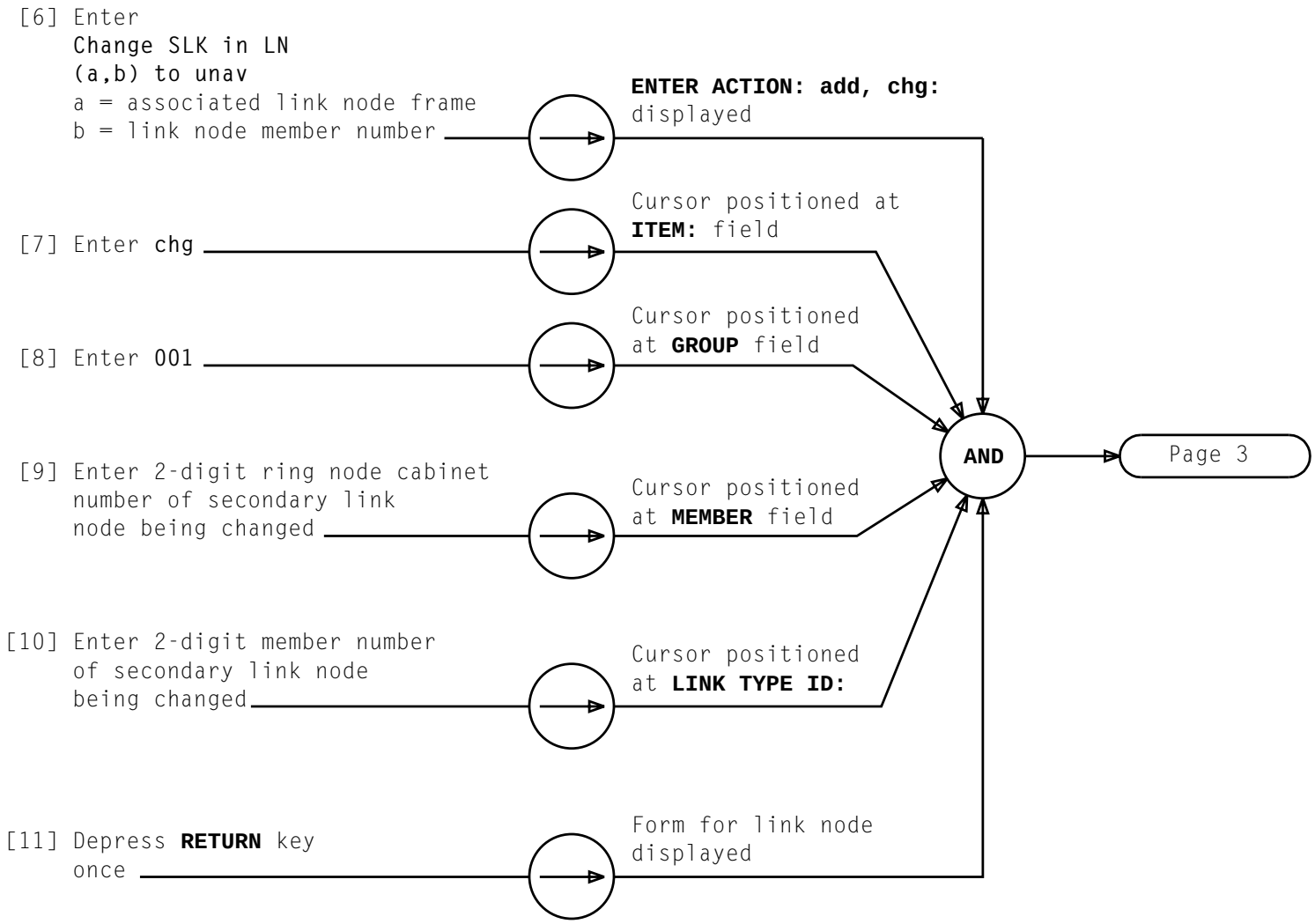

CHANGE SECONDARY SIGNALING LINK TO INITIAL VALUES

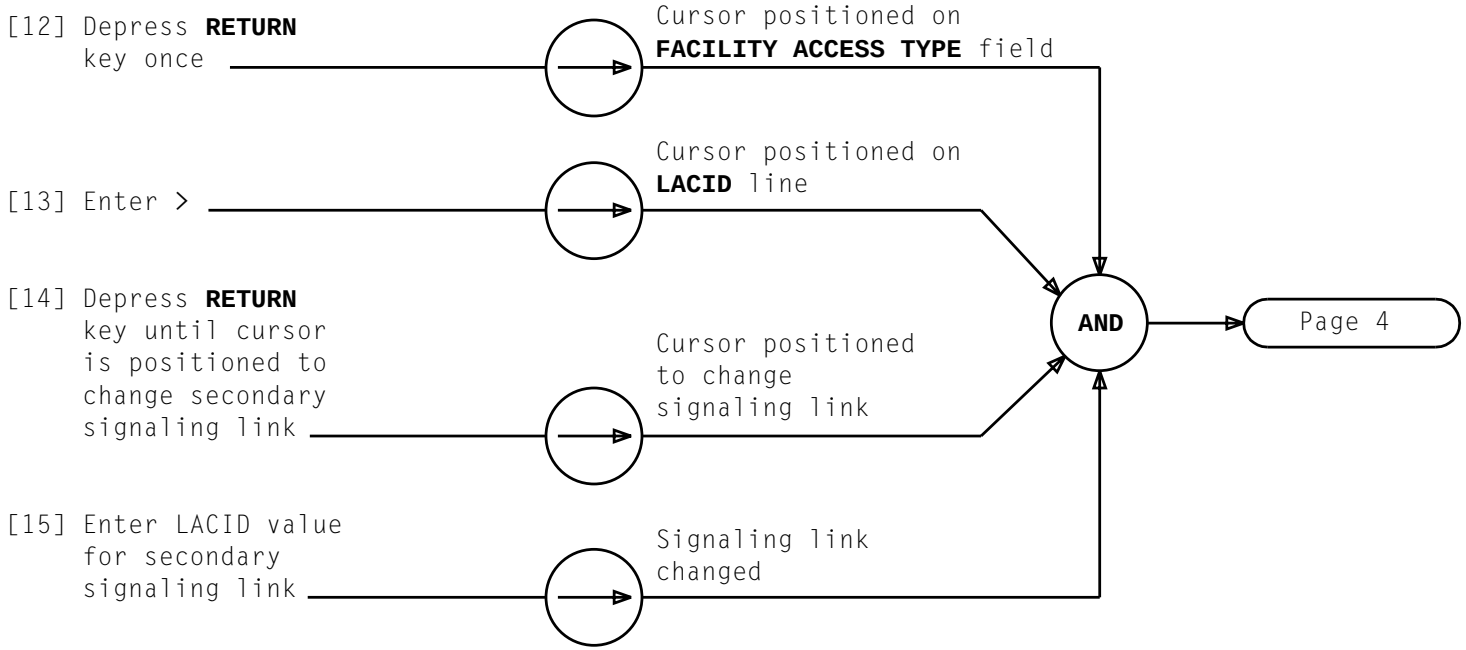

CHANGE SECONDARY SIGNALING LINK TO INITIAL VALUES

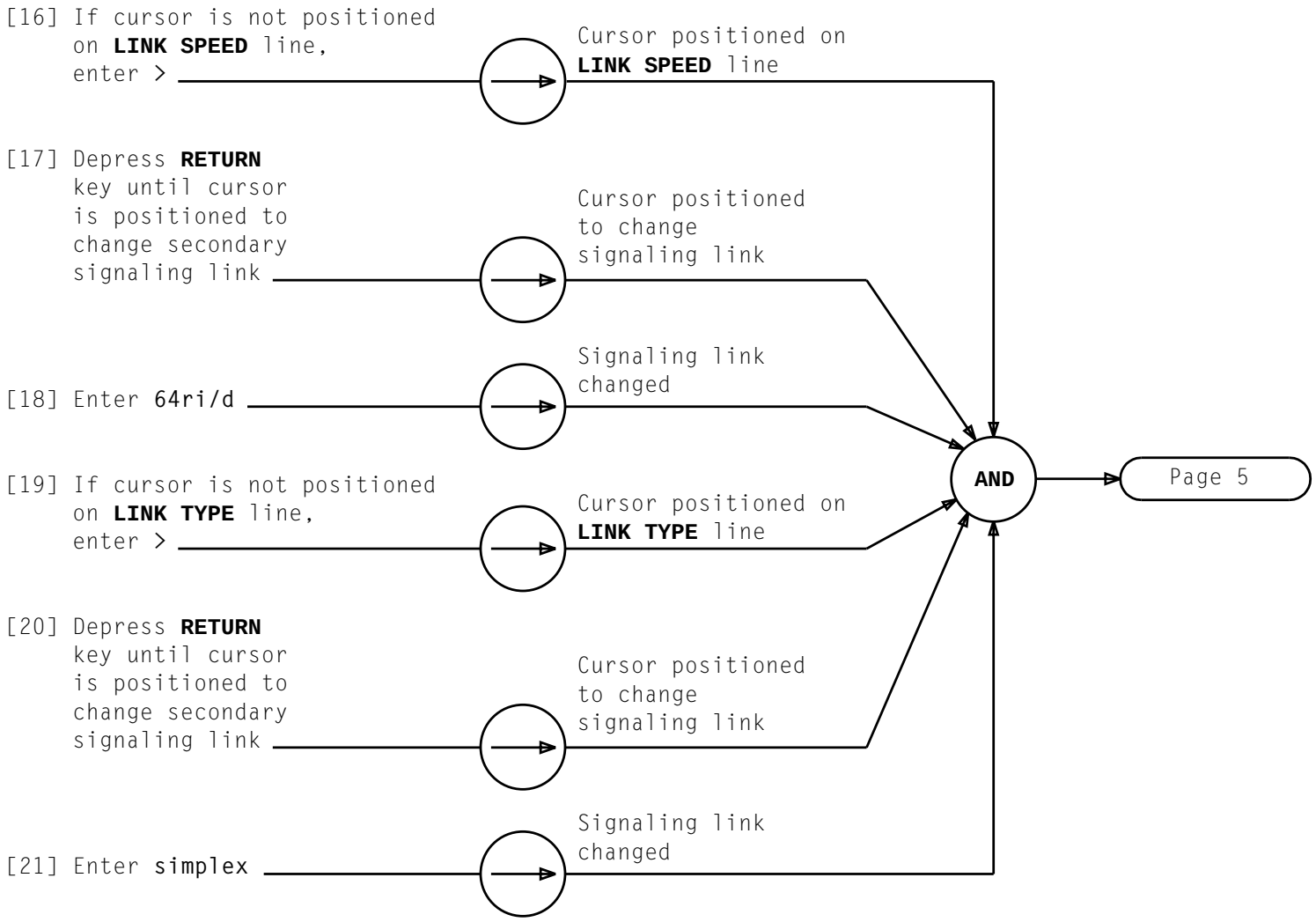

CHANGE SECONDARY SIGNALING LINK TO INITIAL VALUES

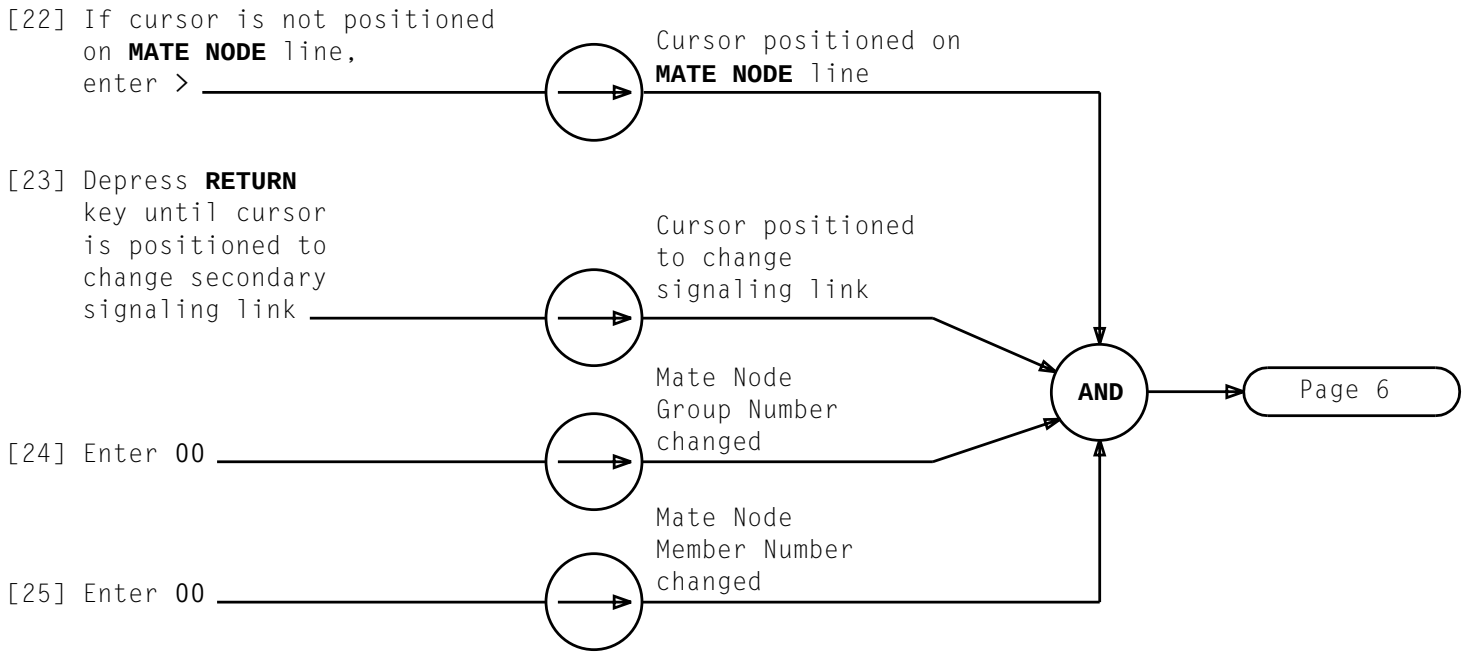

CHANGE SECONDARY SIGNALING LINK TO INITIAL VALUES

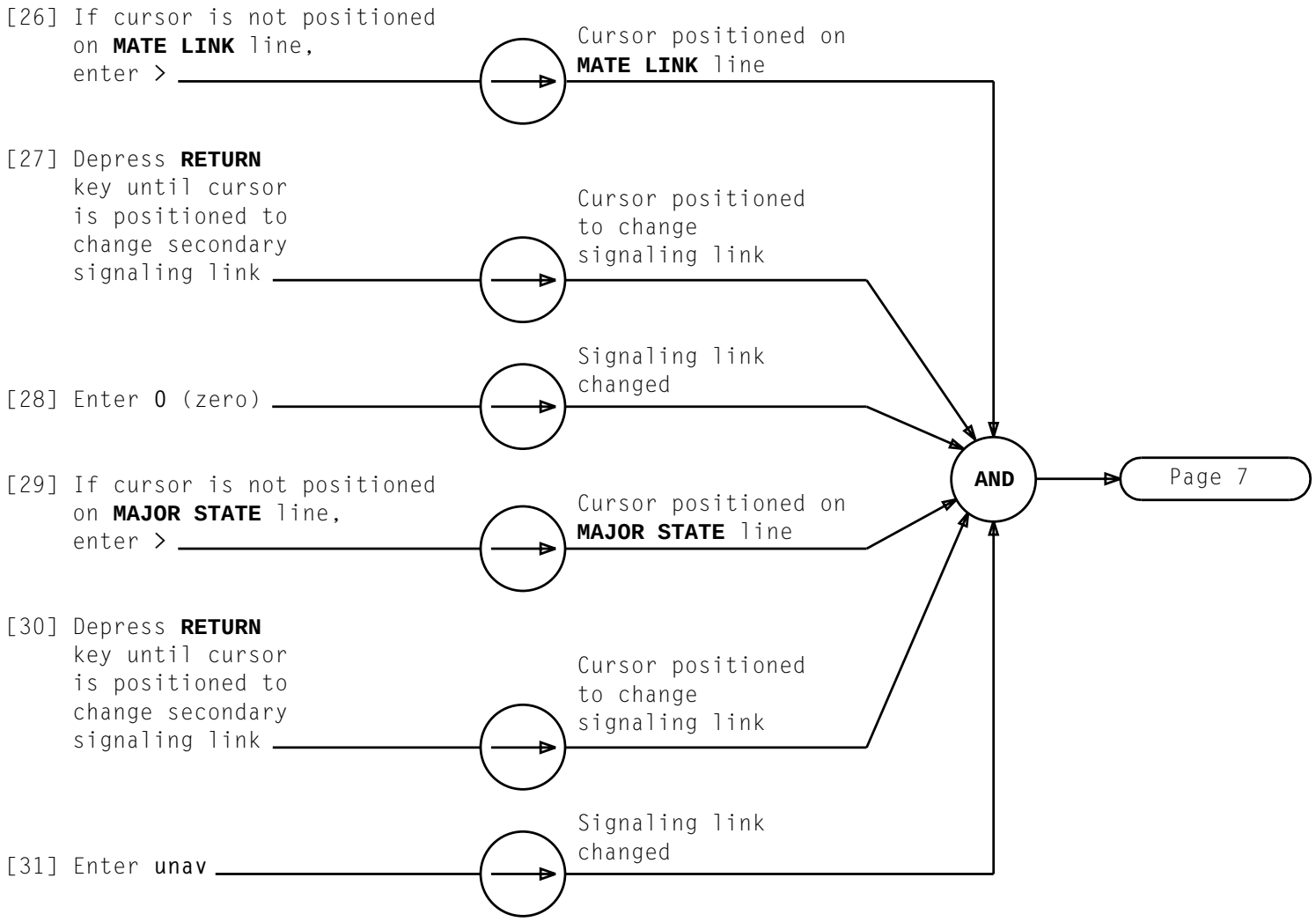

CHANGE SECONDARY SIGNALING LINK TO INITIAL VALUES

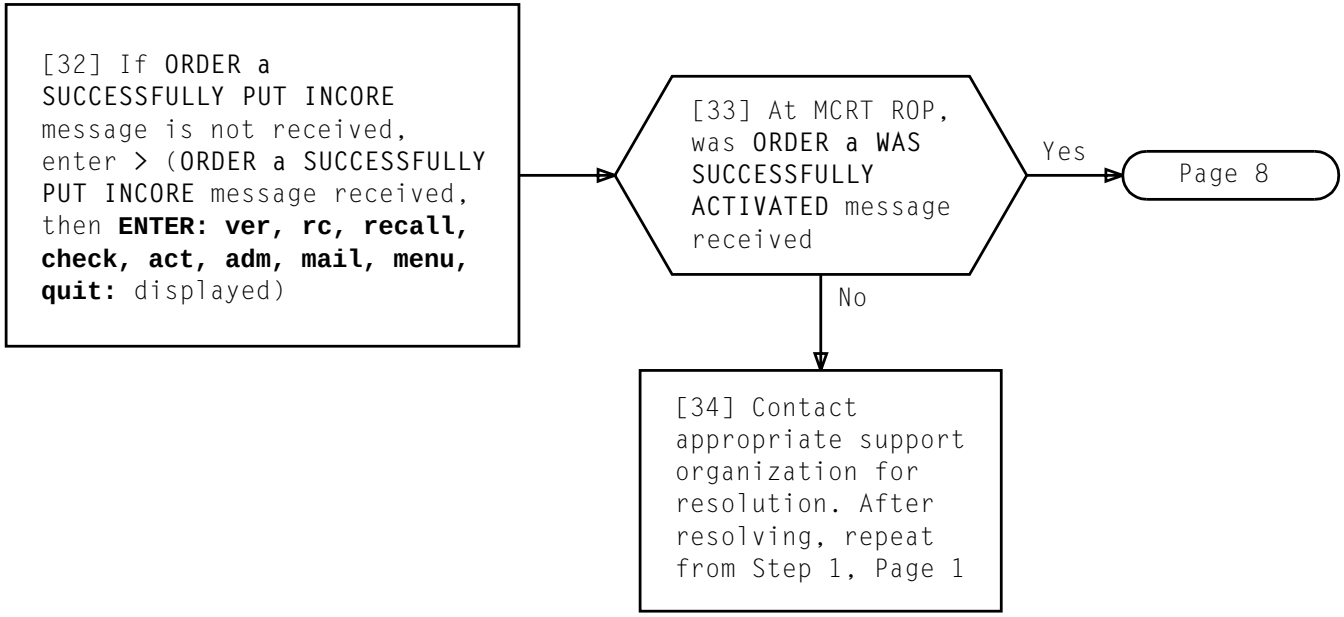

CHANGE SECONDARY SIGNALING LINK TO INITIAL VALUES

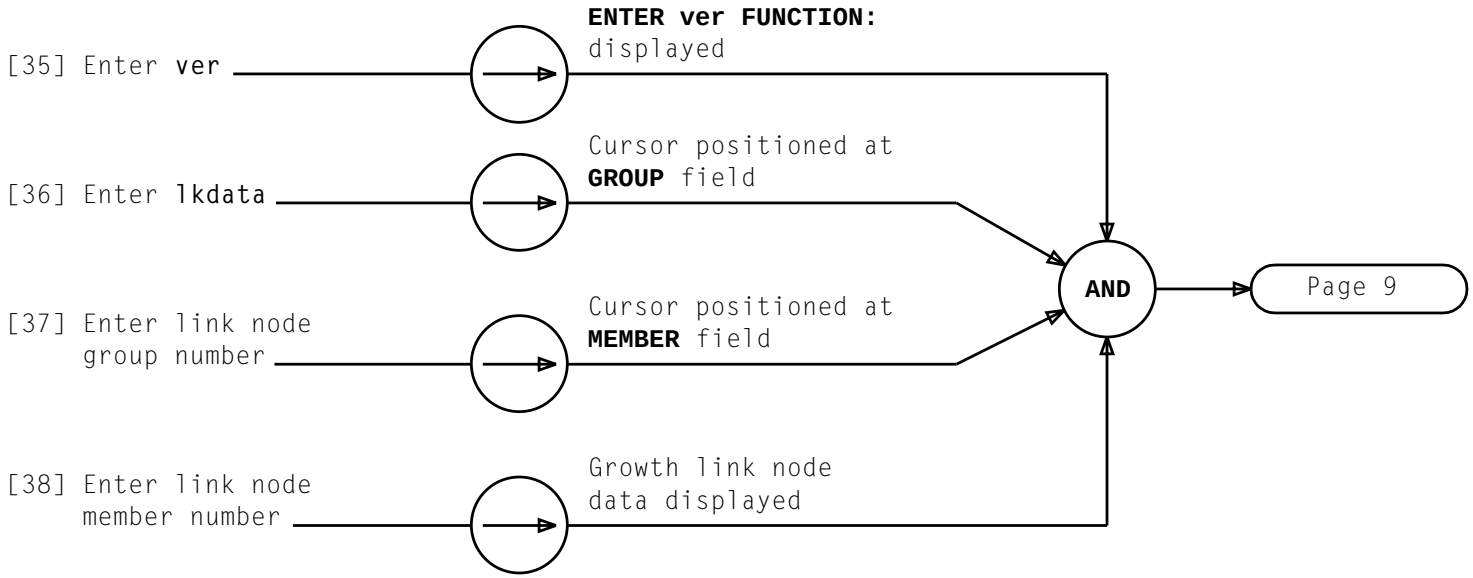

CHANGE SECONDARY SIGNALING LINK TO INITIAL VALUES

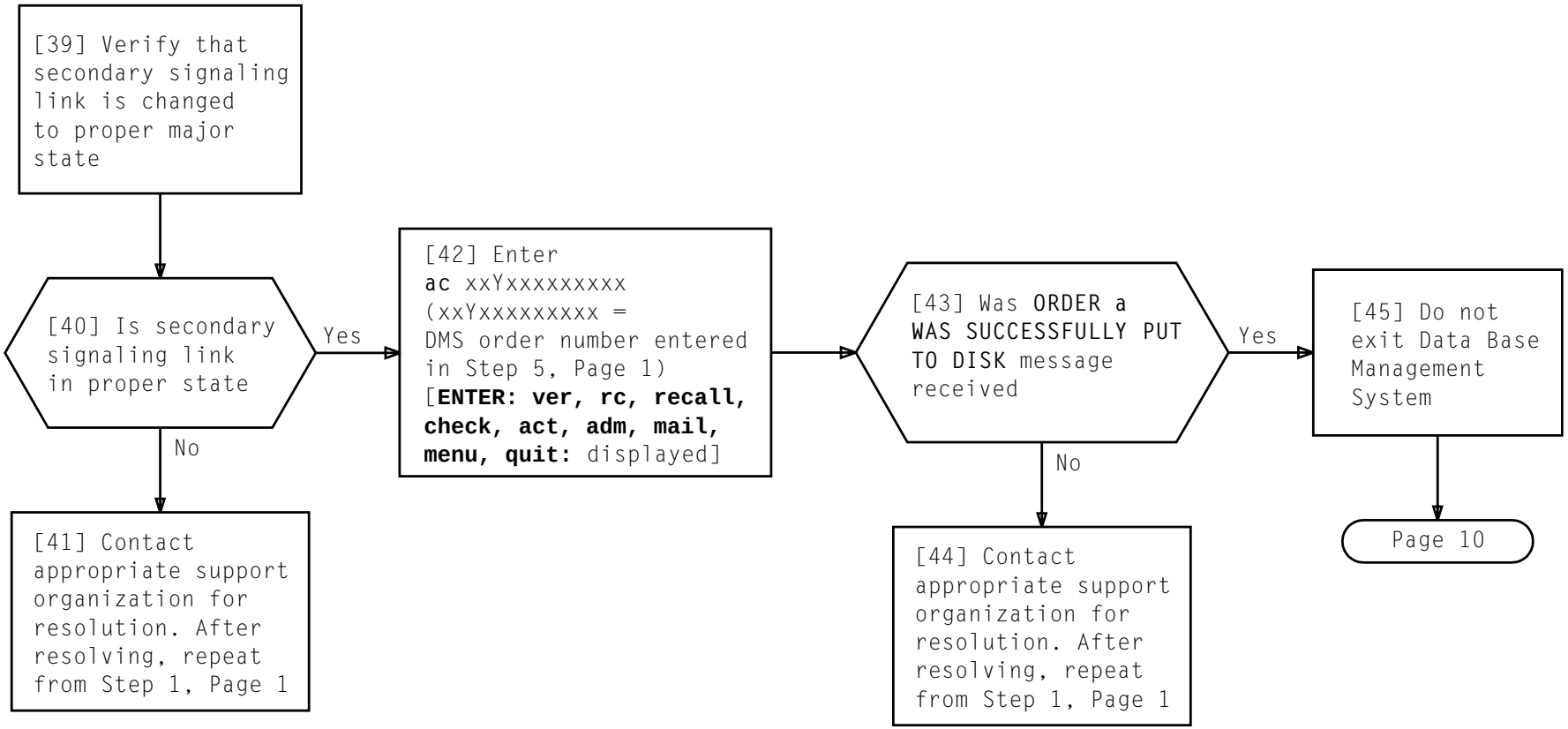

CHANGE SECONDARY SIGNALING LINK TO INITIAL VALUES

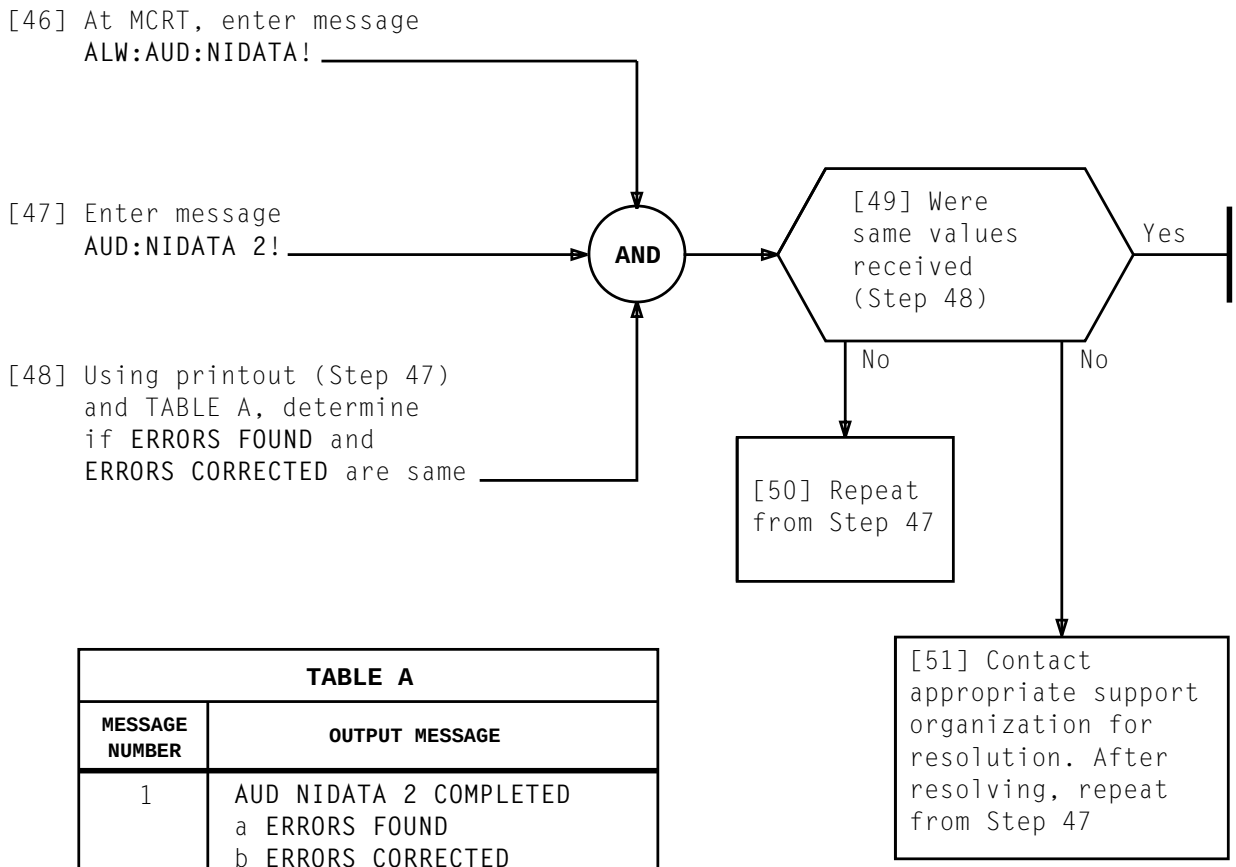

TABLE A

MESSAGE NUMBER	OUTPUT MESSAGE
1	AUD NIDATA 2 COMPLETED a ERRORS FOUND b ERRORS CORRECTED

a = Total number of errors found
b = Total number of errors corrected

CHANGE SECONDARY SIGNALING LINK TO INITIAL VALUES

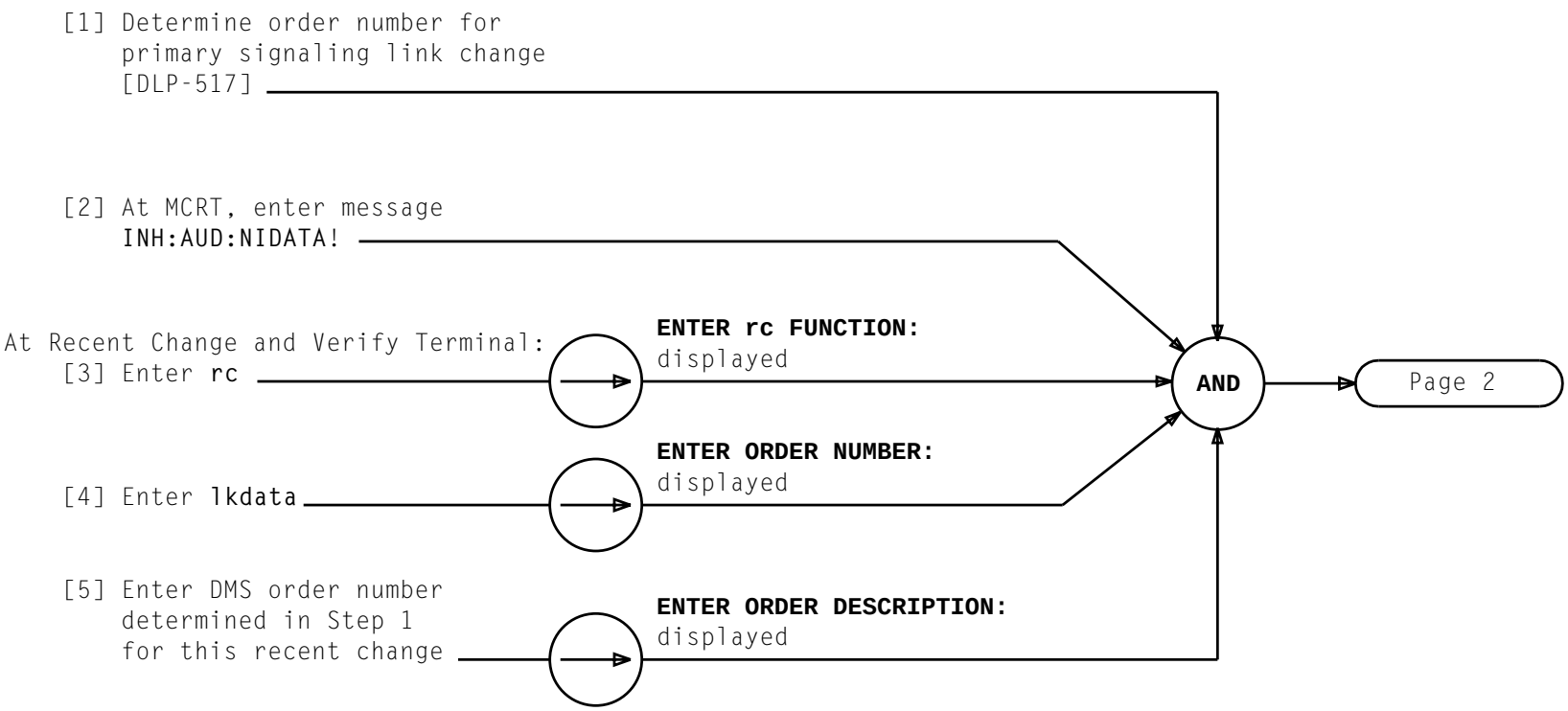

CHANGE LINK INTERFACE DATA FOR PRIMARY AND SECONDARY SIGNALING LINKS

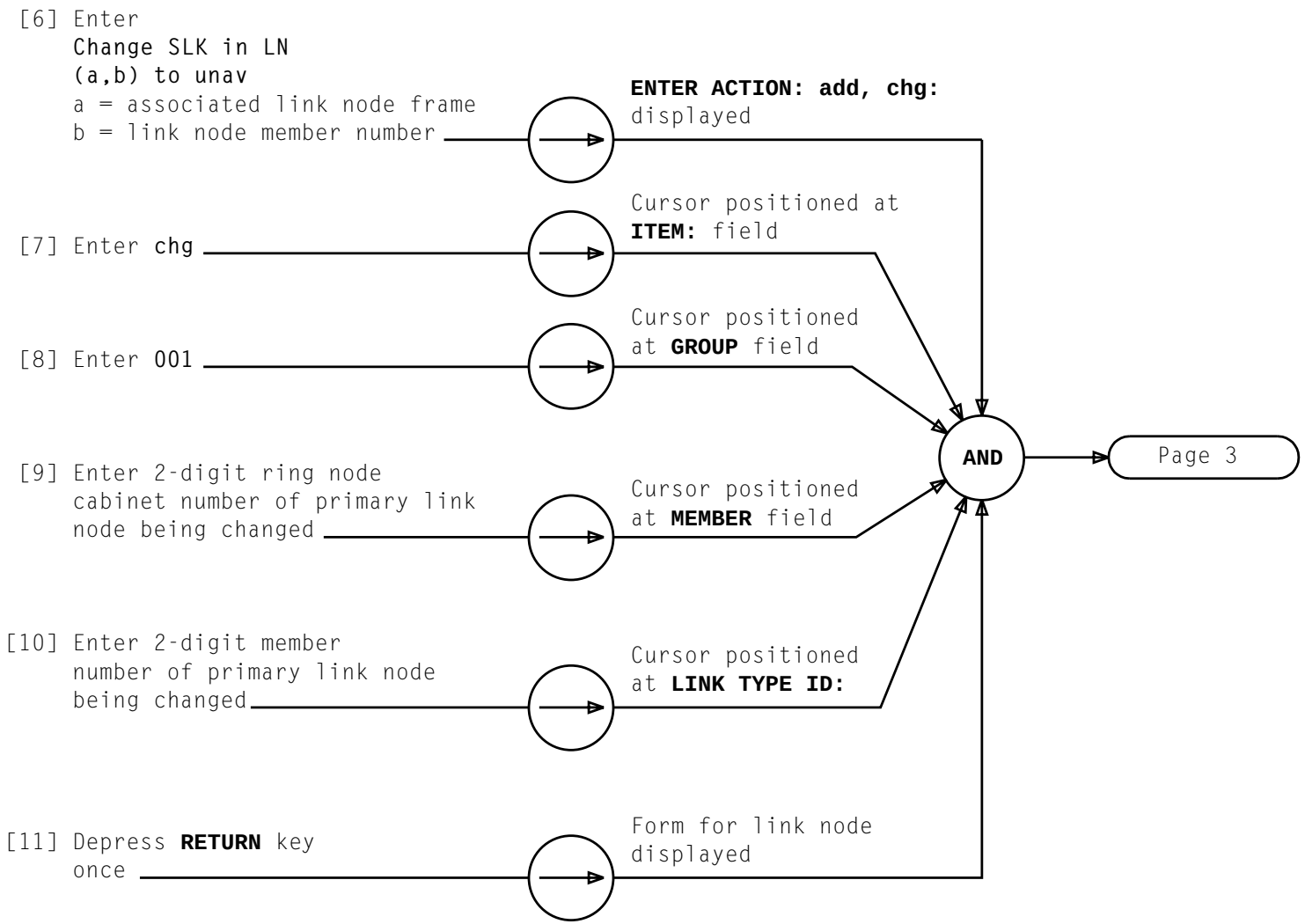

CHANGE LINK INTERFACE DATA FOR PRIMARY AND SECONDARY SIGNALING LINKS

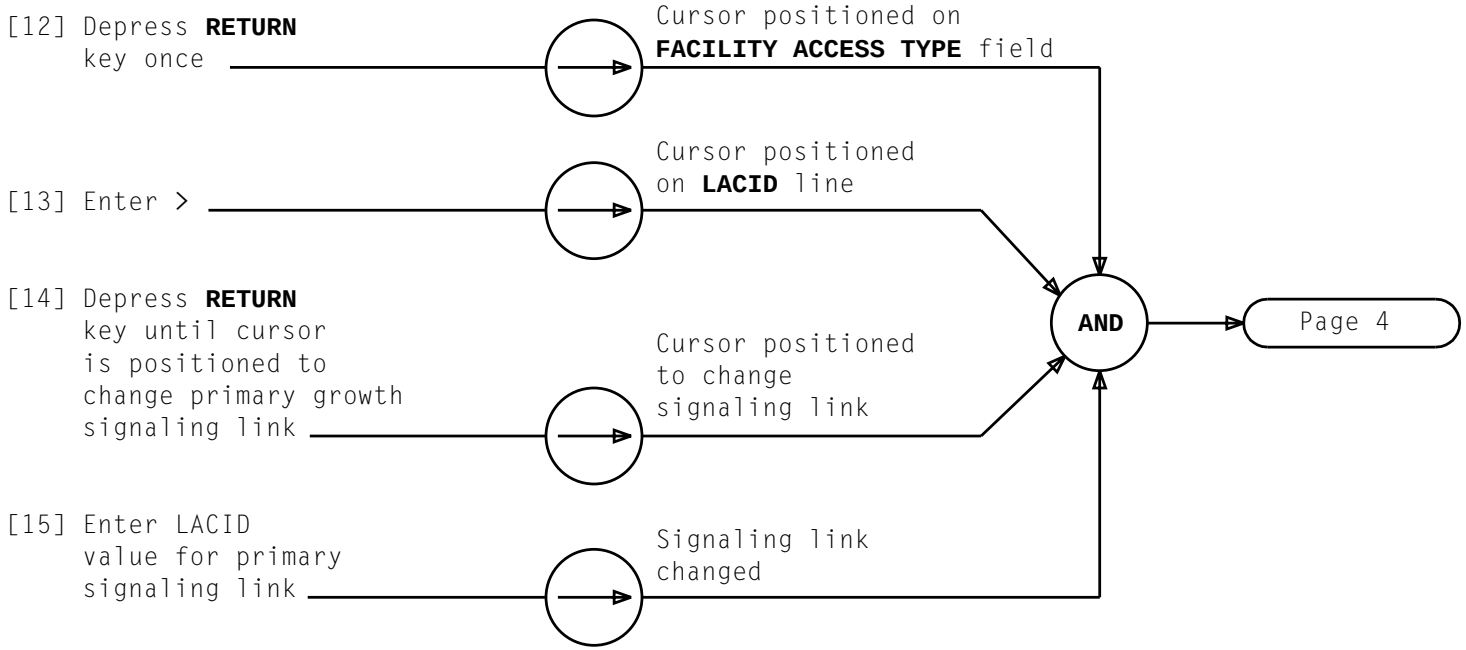

CHANGE LINK INTERFACE DATA FOR PRIMARY AND SECONDARY SIGNALING LINKS

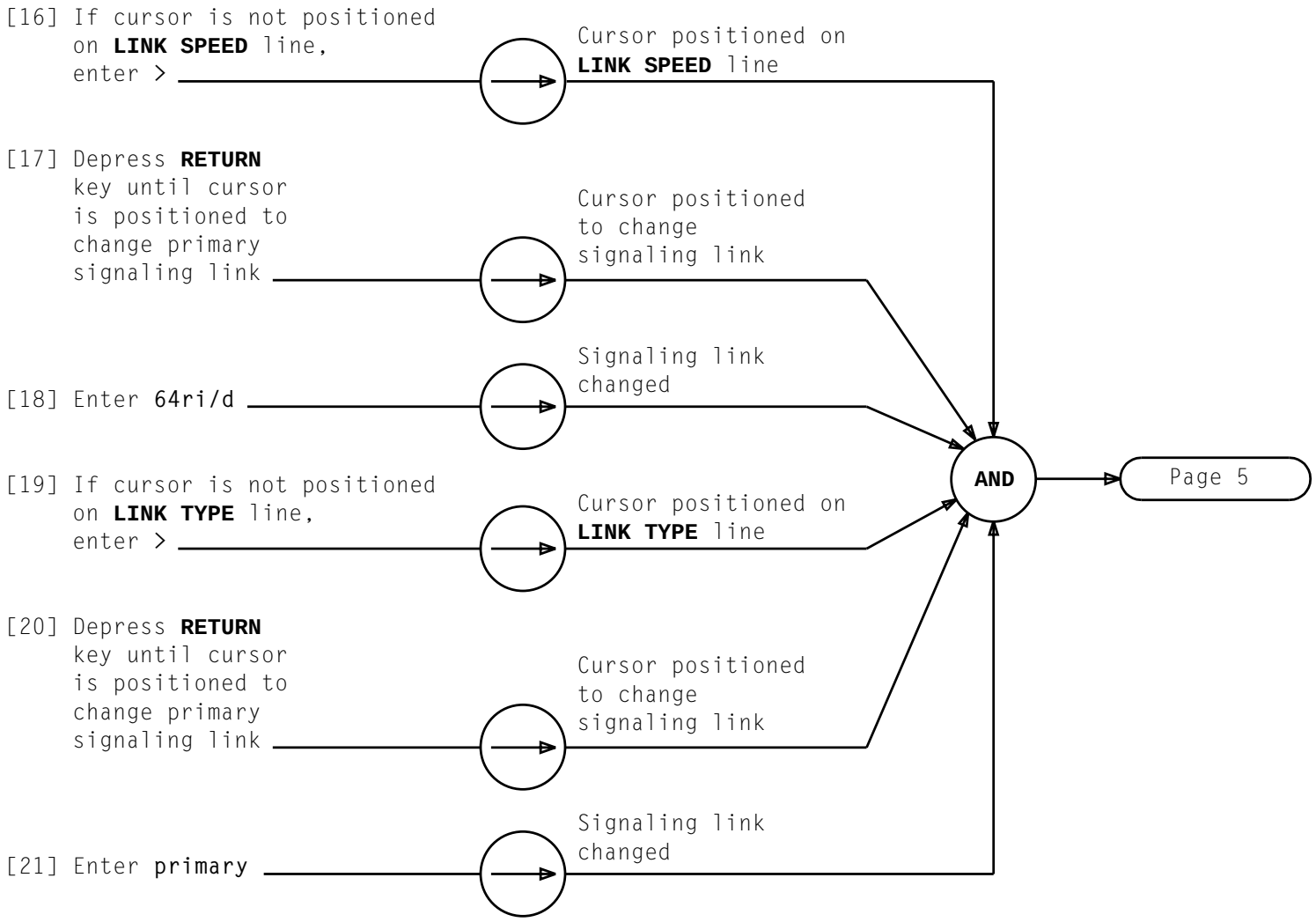

CHANGE LINK INTERFACE DATA FOR PRIMARY AND SECONDARY SIGNALING LINKS

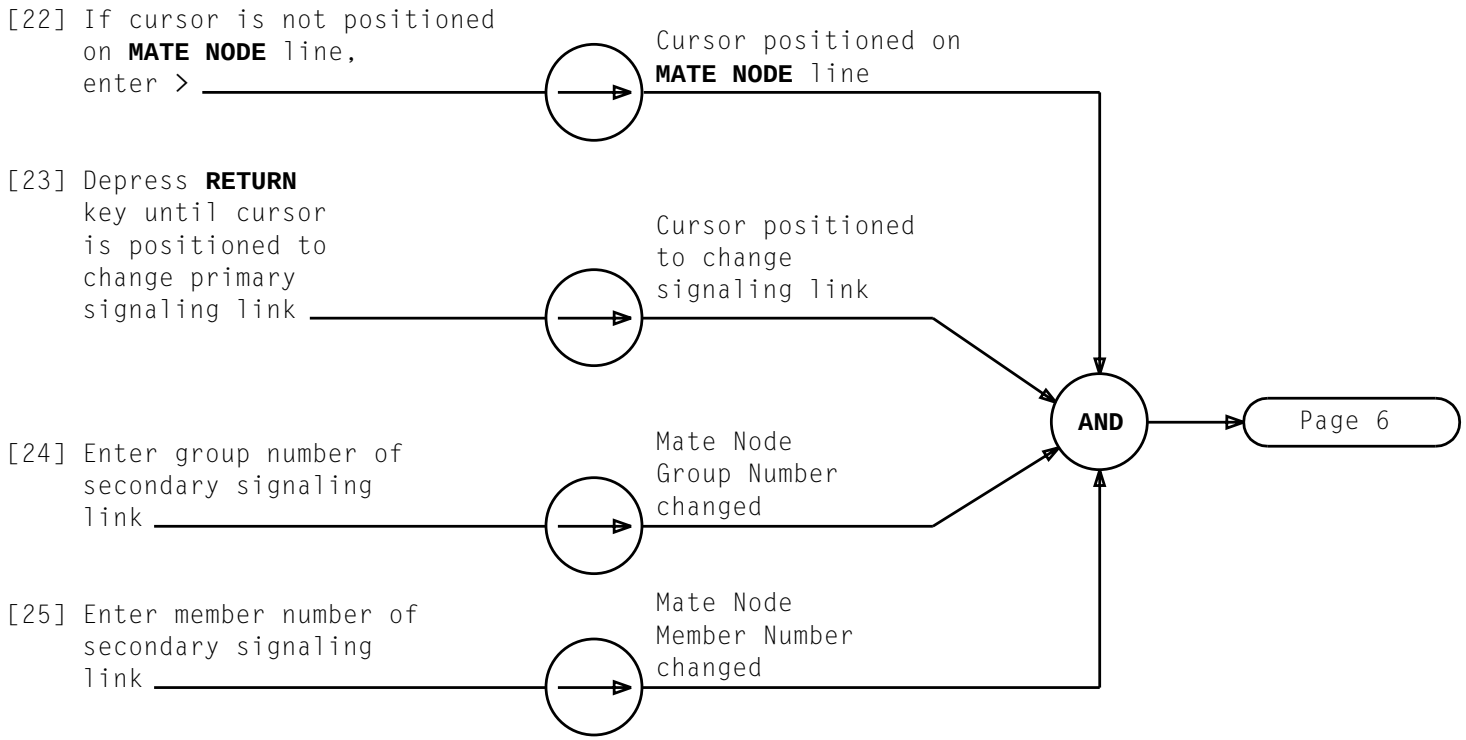

CHANGE LINK INTERFACE DATA FOR PRIMARY AND SECONDARY

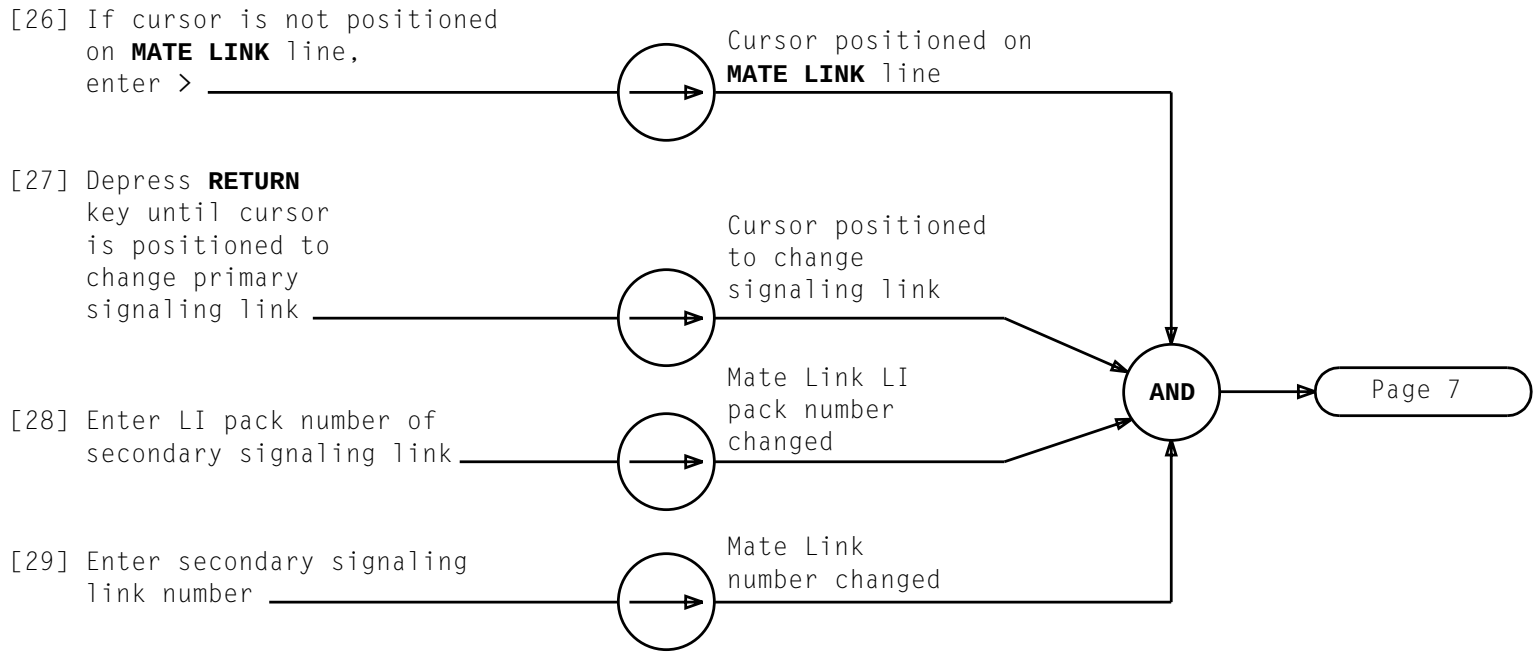

CHANGE LINK INTERFACE DATA FOR PRIMARY AND SECONDARY SIGNALING LINKS

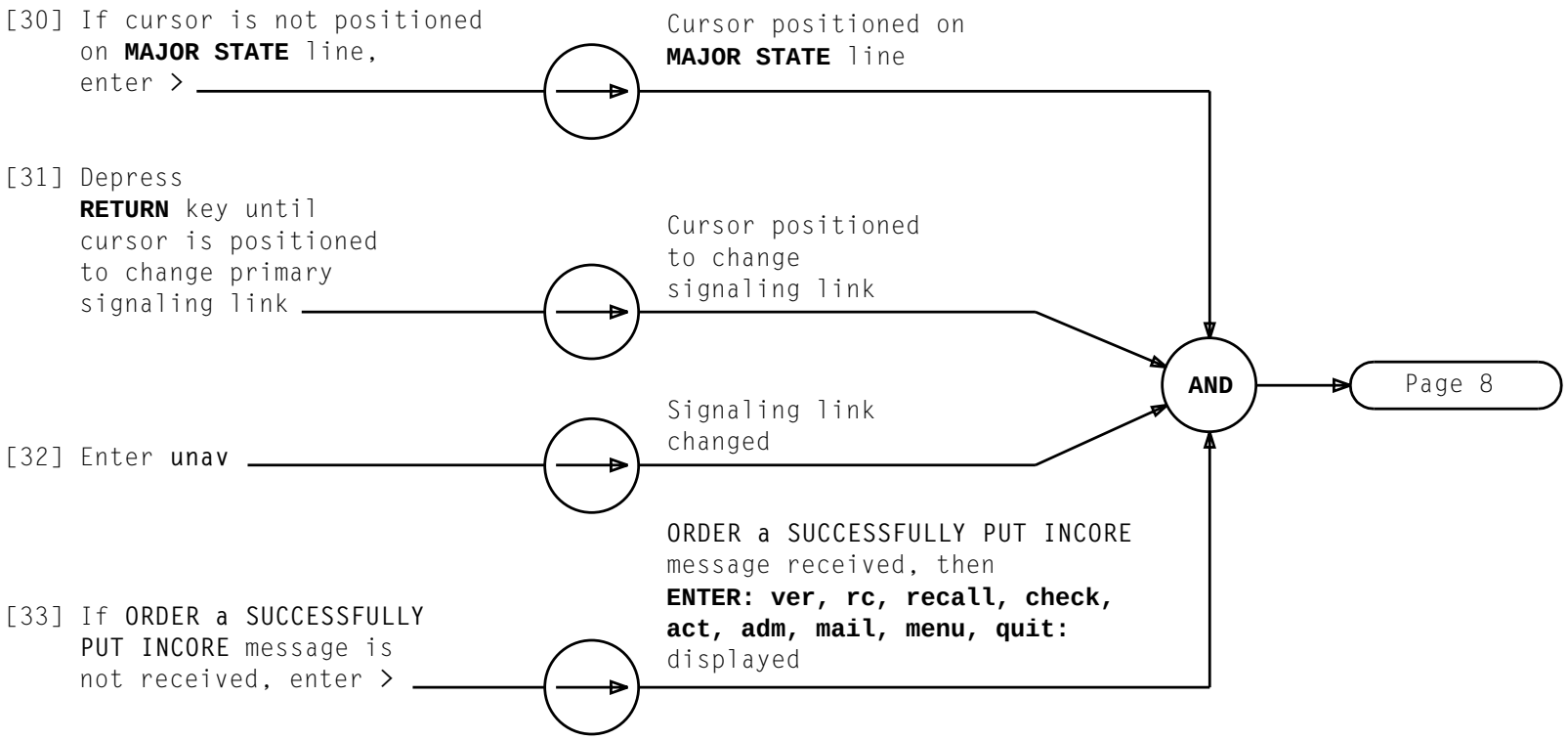

CHANGE LINK INTERFACE DATA FOR PRIMARY AND SECONDARY SIGNALING LINKS

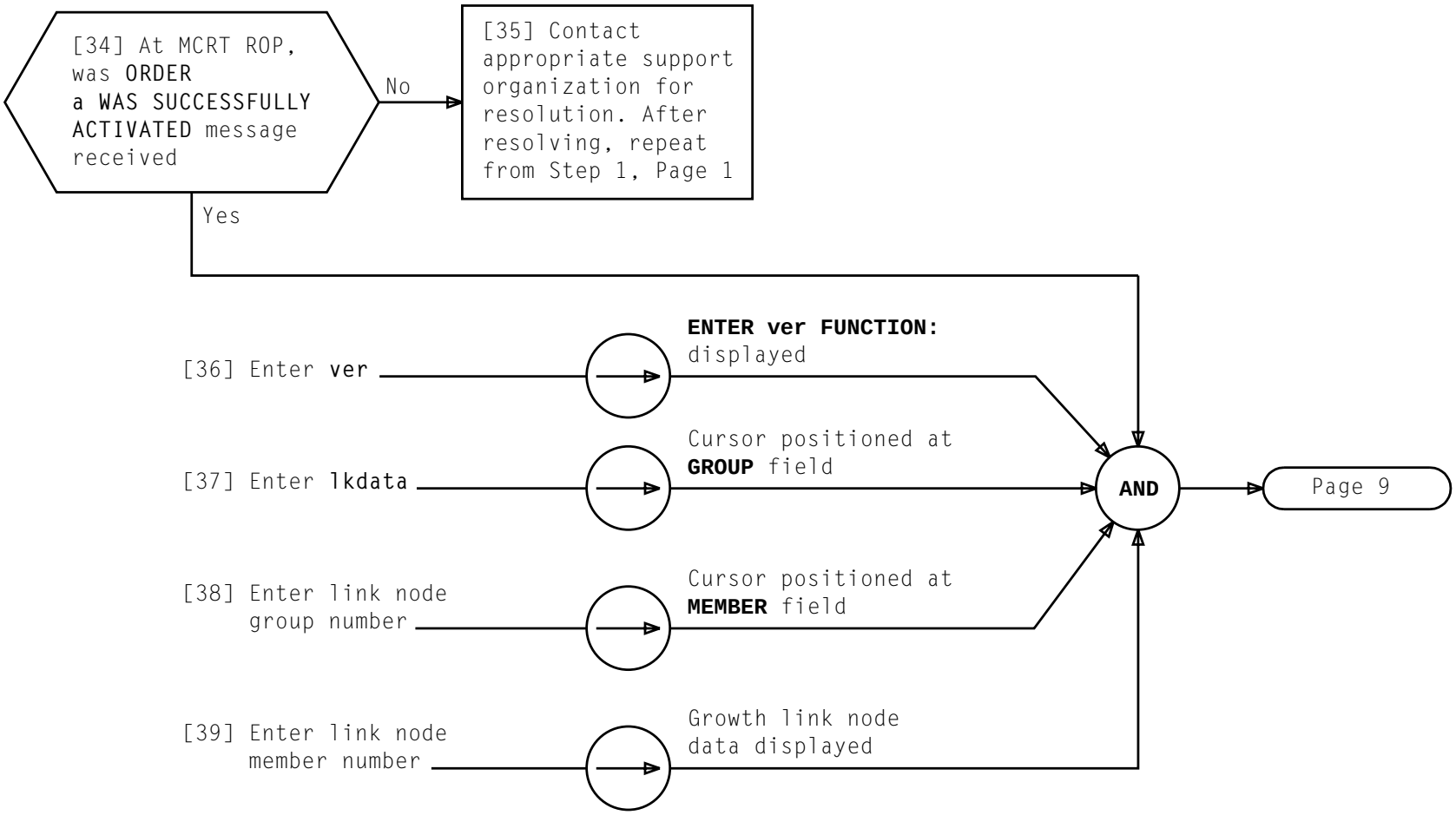
[34] At MCRT ROP, was ORDER a WAS SUCCESSFULLY ACTIVATED message received
No
[35] Contact appropriate support organization for resolution. After resolving, repeat from Step 1, Page 1
Yes
[36] Enter ver
ENTER ver FUNCTION: displayed
[37] Enter lkdata
Cursor positioned at GROUP field
[38] Enter link node group number
Cursor positioned at MEMBER field
[39] Enter link node member number
Growth link node data displayed
AND
Page 9

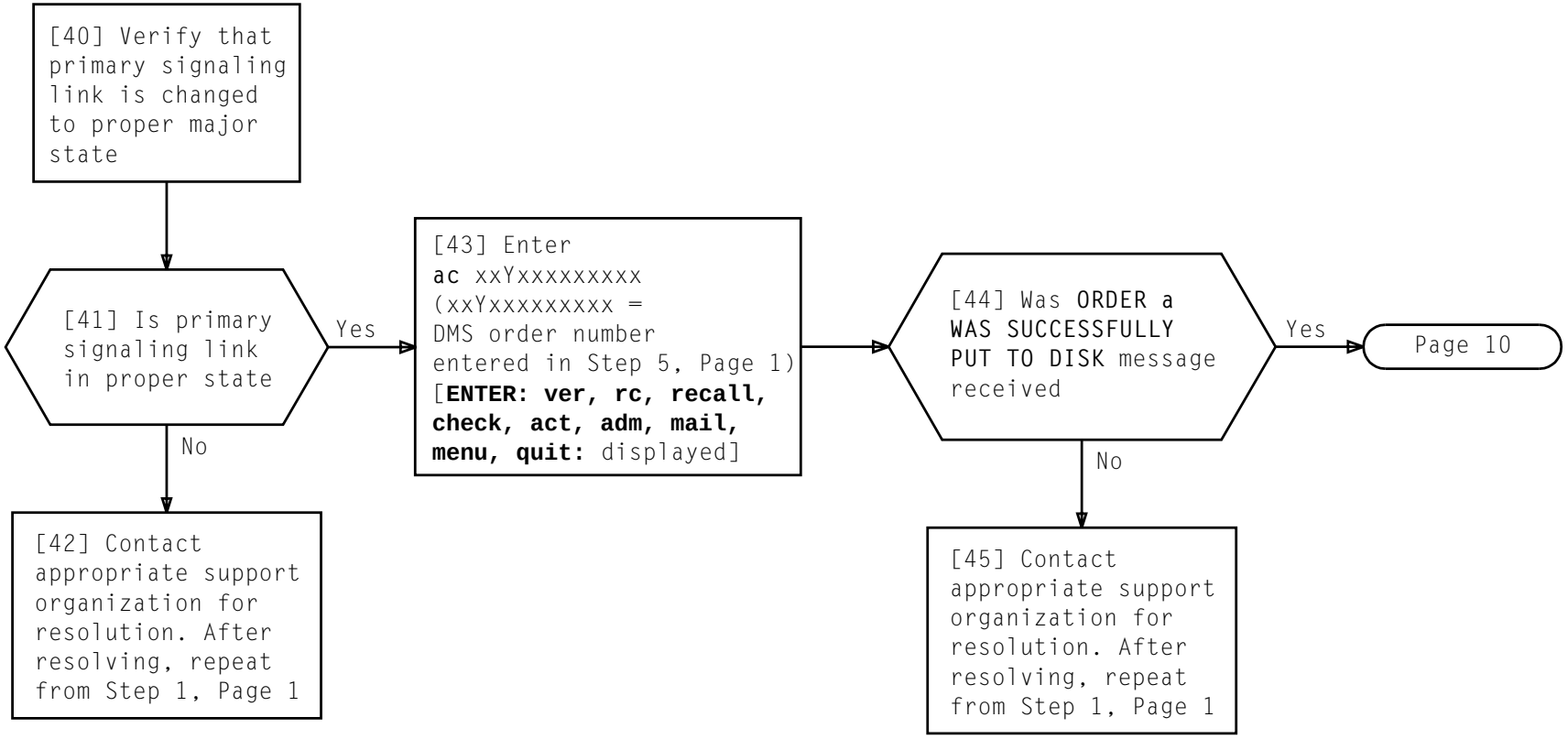

CHANGE LINK INTERFACE DATA FOR PRIMARY AND SECONDARY SIGNALING LINKS

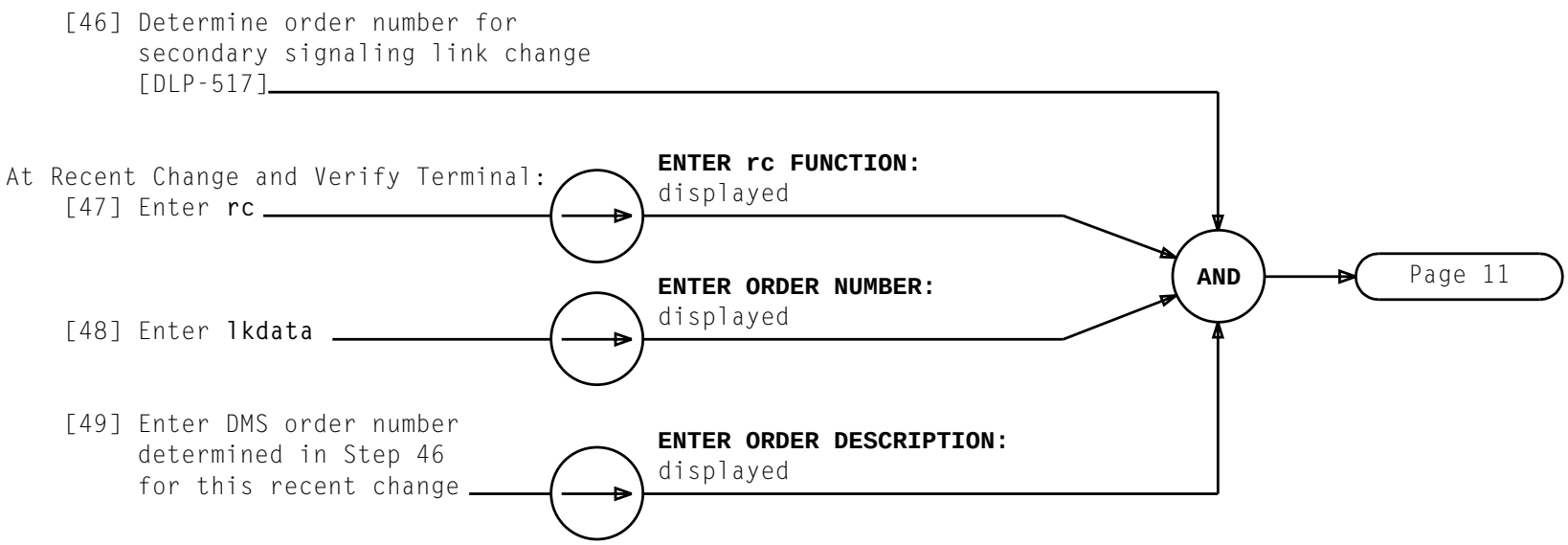

CHANGE LINK INTERFACE DATA FOR PRIMARY AND SECONDARY SIGNALING LINKS

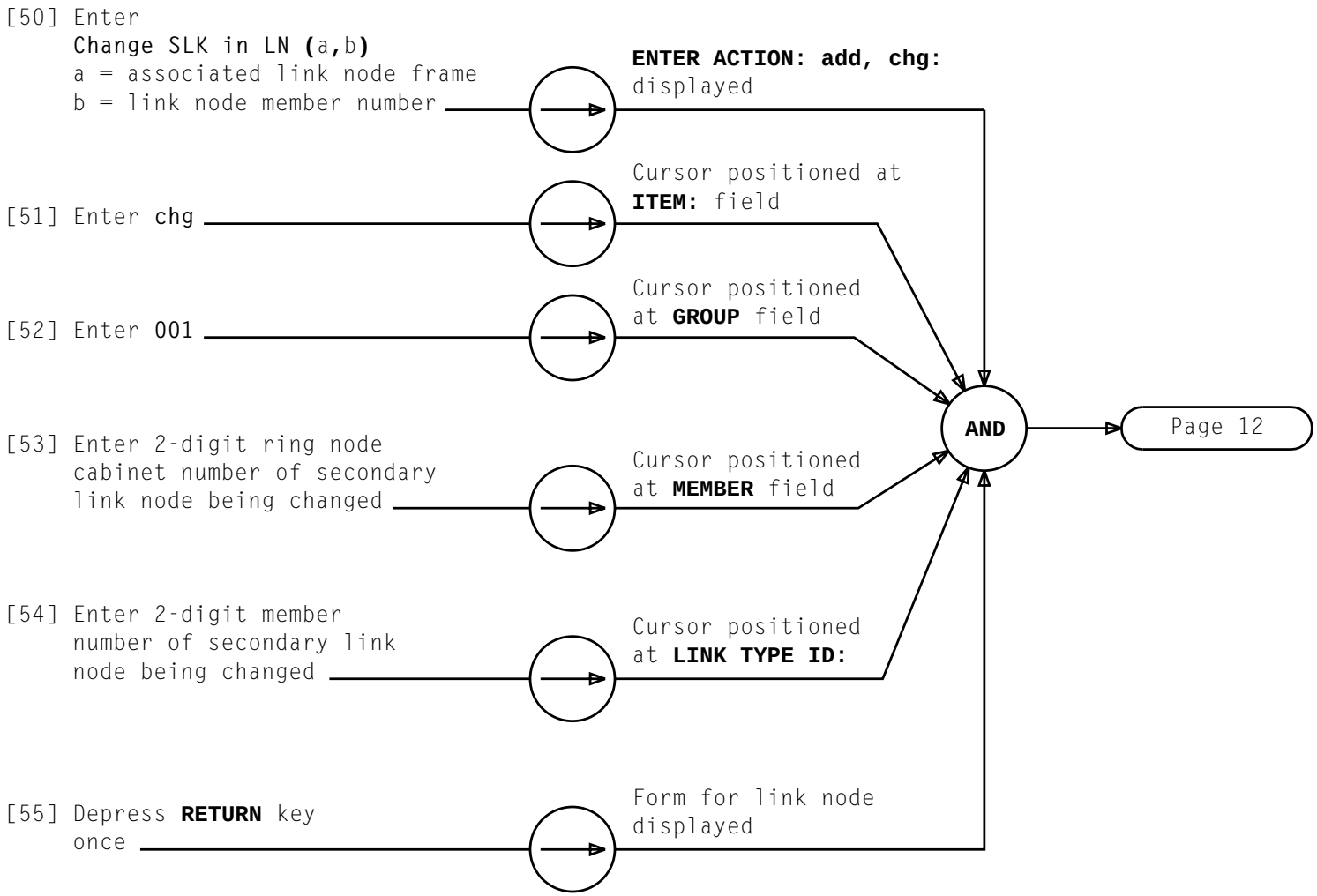

CHANGE LINK INTERFACE DATA FOR PRIMARY AND SECONDARY SIGNALING LINKS

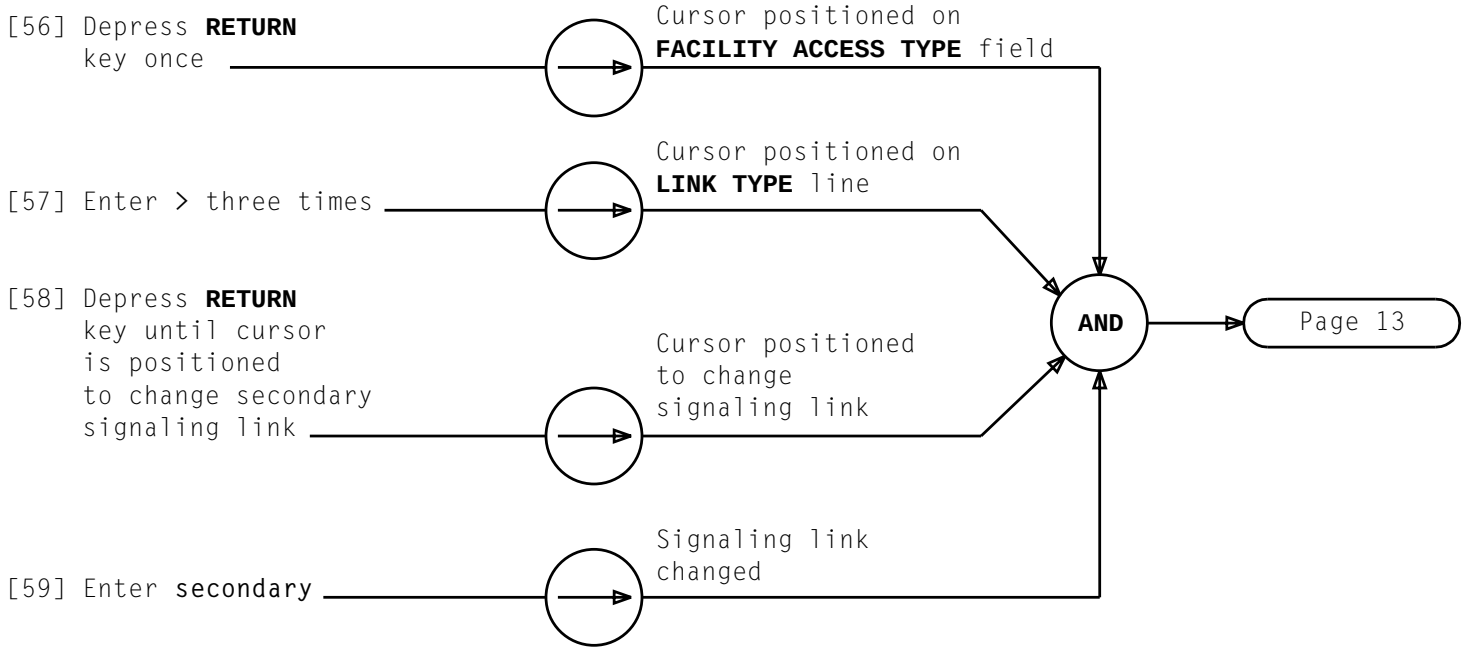

CHANGE LINK INTERFACE DATA FOR PRIMARY AND SECONDARY SIGNALING LINKS

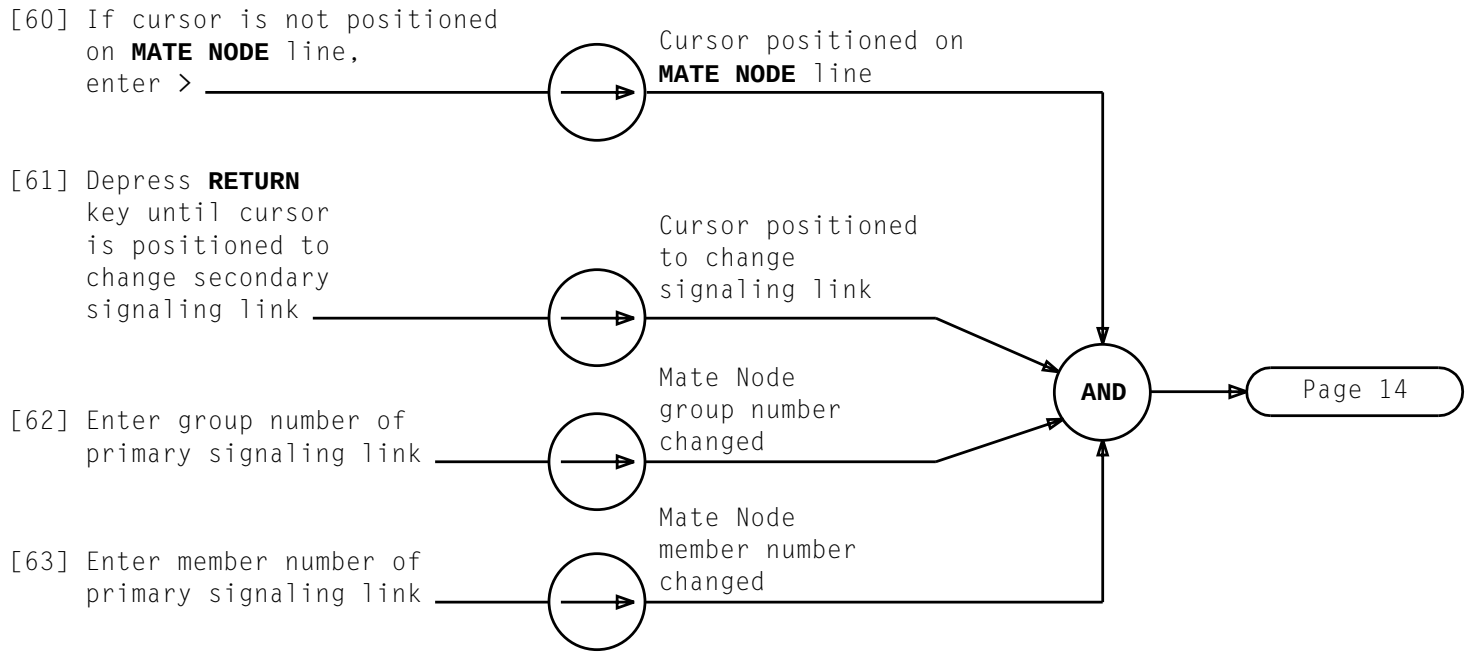

CHANGE LINK INTERFACE DATA FOR PRIMARY AND SECONDARY SIGNALING LINKS

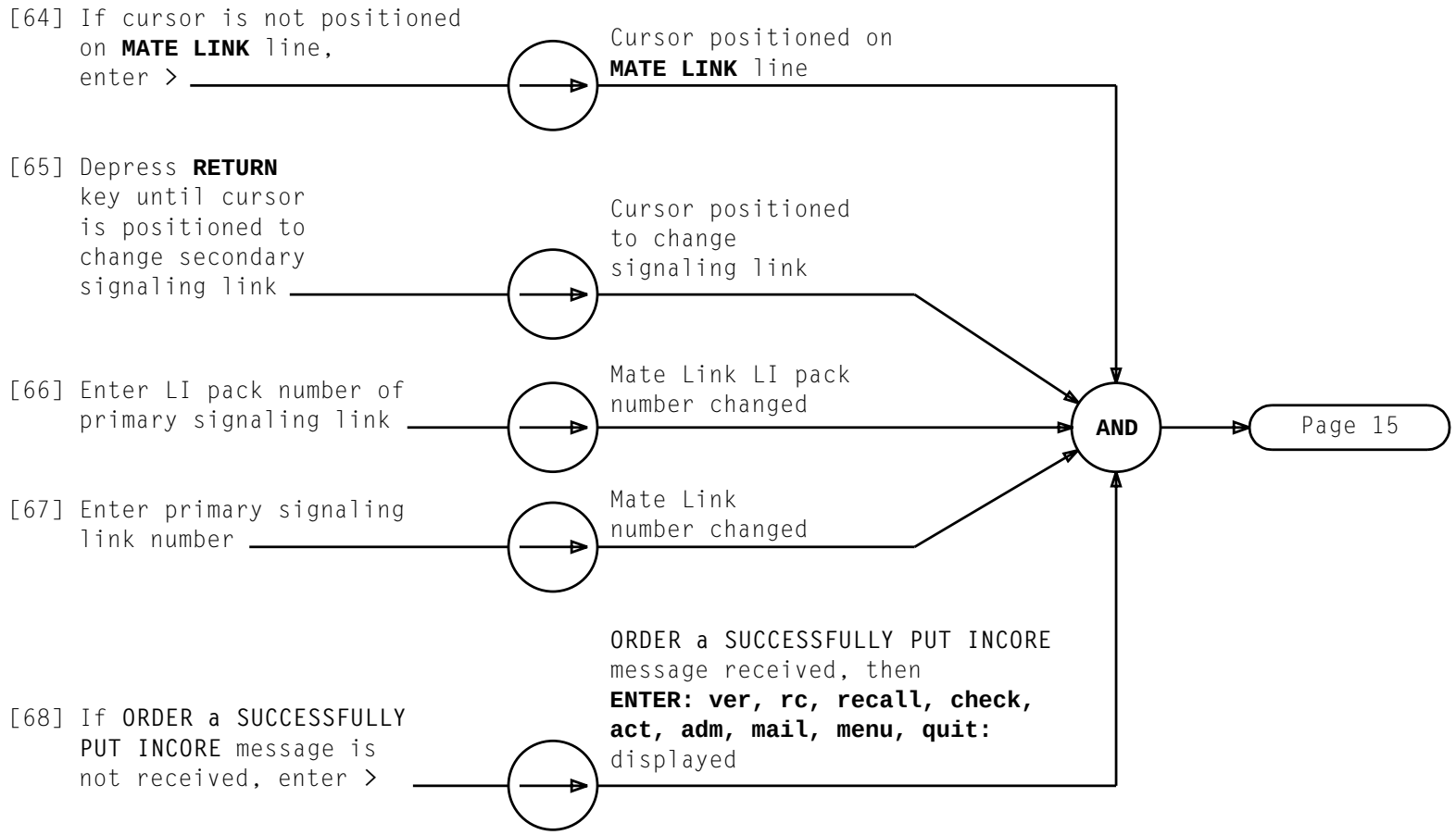

CHANGE LINK INTERFACE DATA FOR PRIMARY AND SECONDARY SIGNALING LINKS

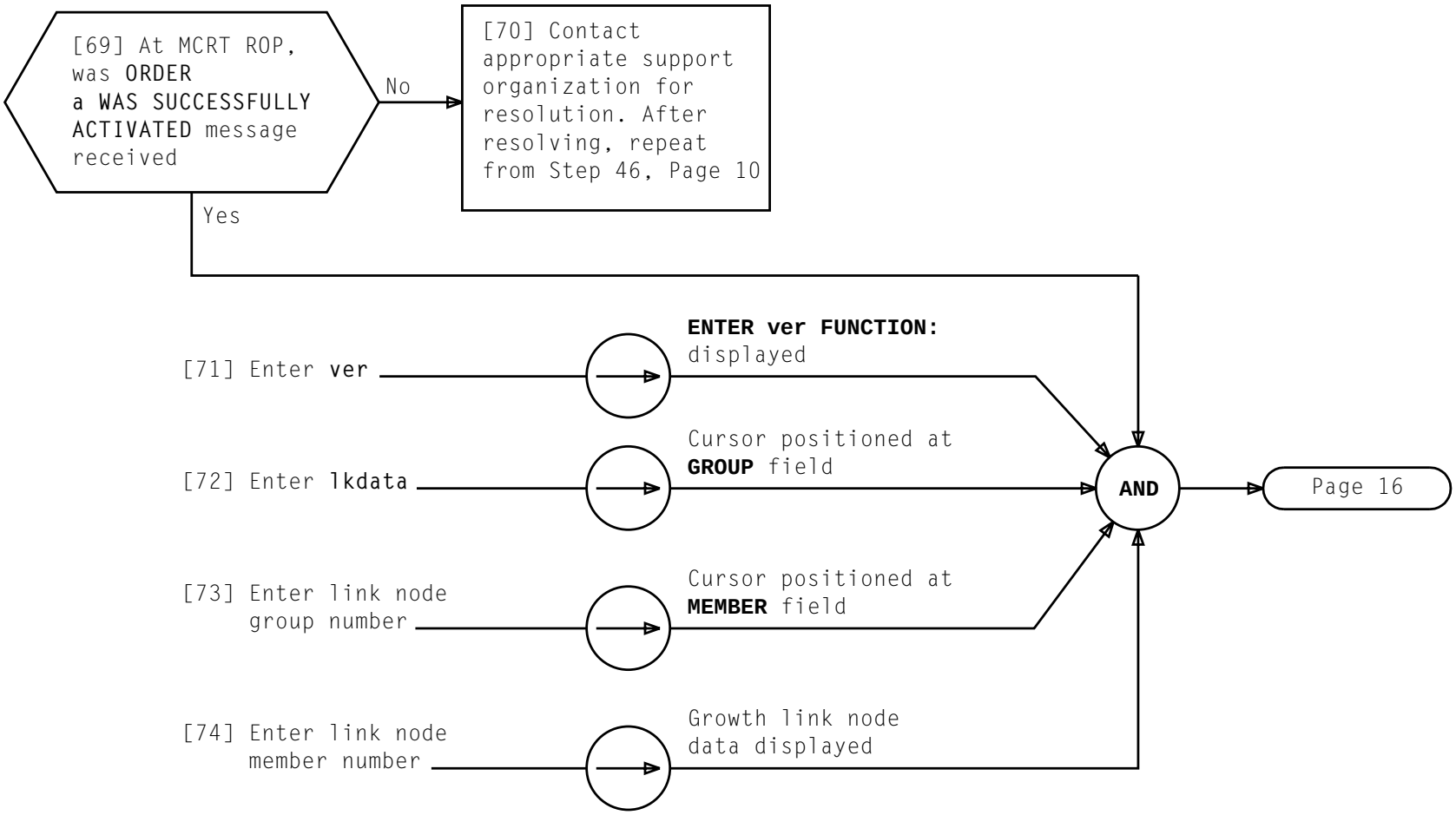
[69] At MCRT ROP, was ORDER a WAS SUCCESSFULLY ACTIVATED message received
No
[70] Contact appropriate support organization for resolution. After resolving, repeat from Step 46, Page 10
Yes
[71] Enter ver
ENTER ver FUNCTION: displayed
[72] Enter lkdata
Cursor positioned at GROUP field
[73] Enter link node group number
Cursor positioned at MEMBER field
[74] Enter link node member number
Growth link node data displayed
AND
Page 16

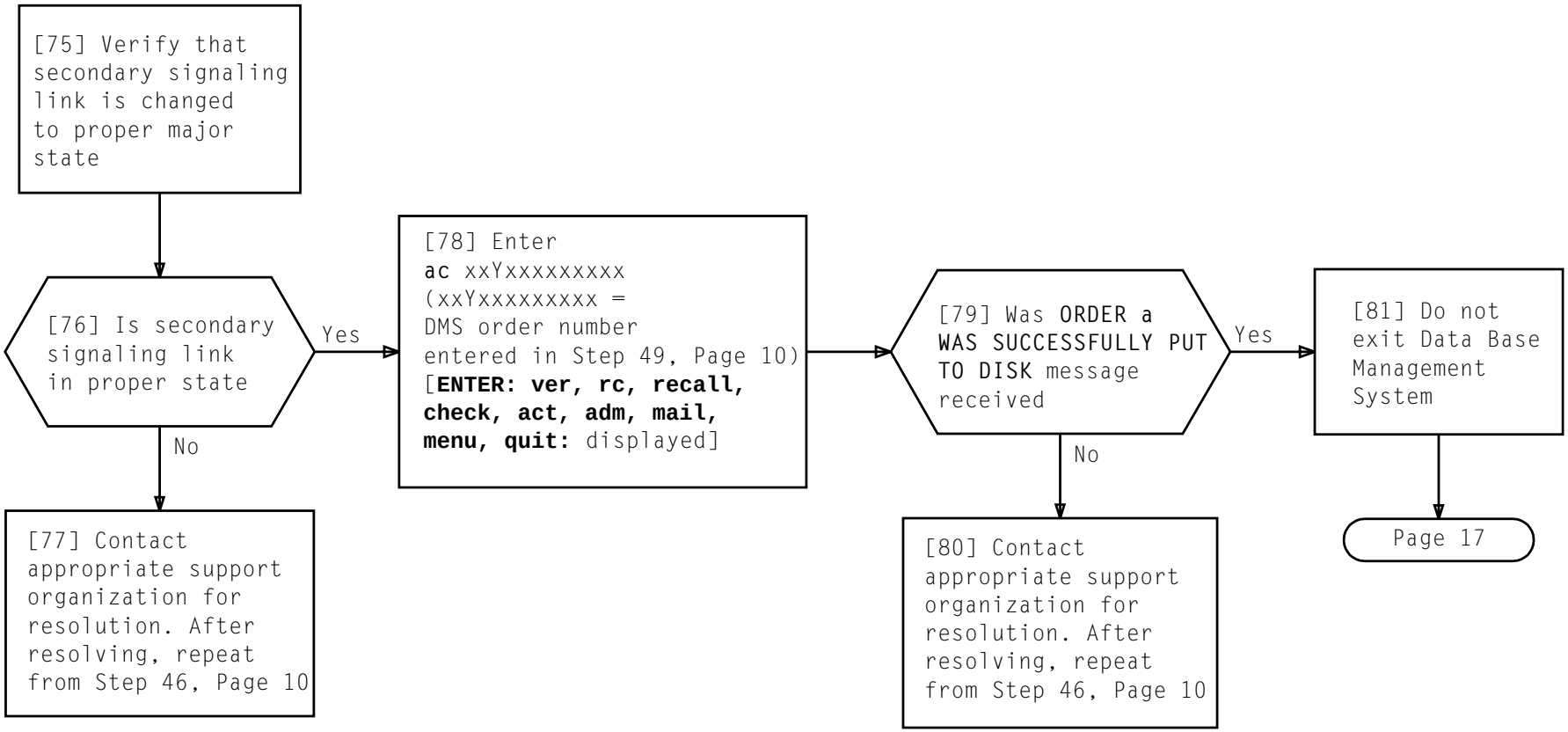

CHANGE LINK INTERFACE DATA FOR PRIMARY AND SECONDARY SIGNALING LINKS

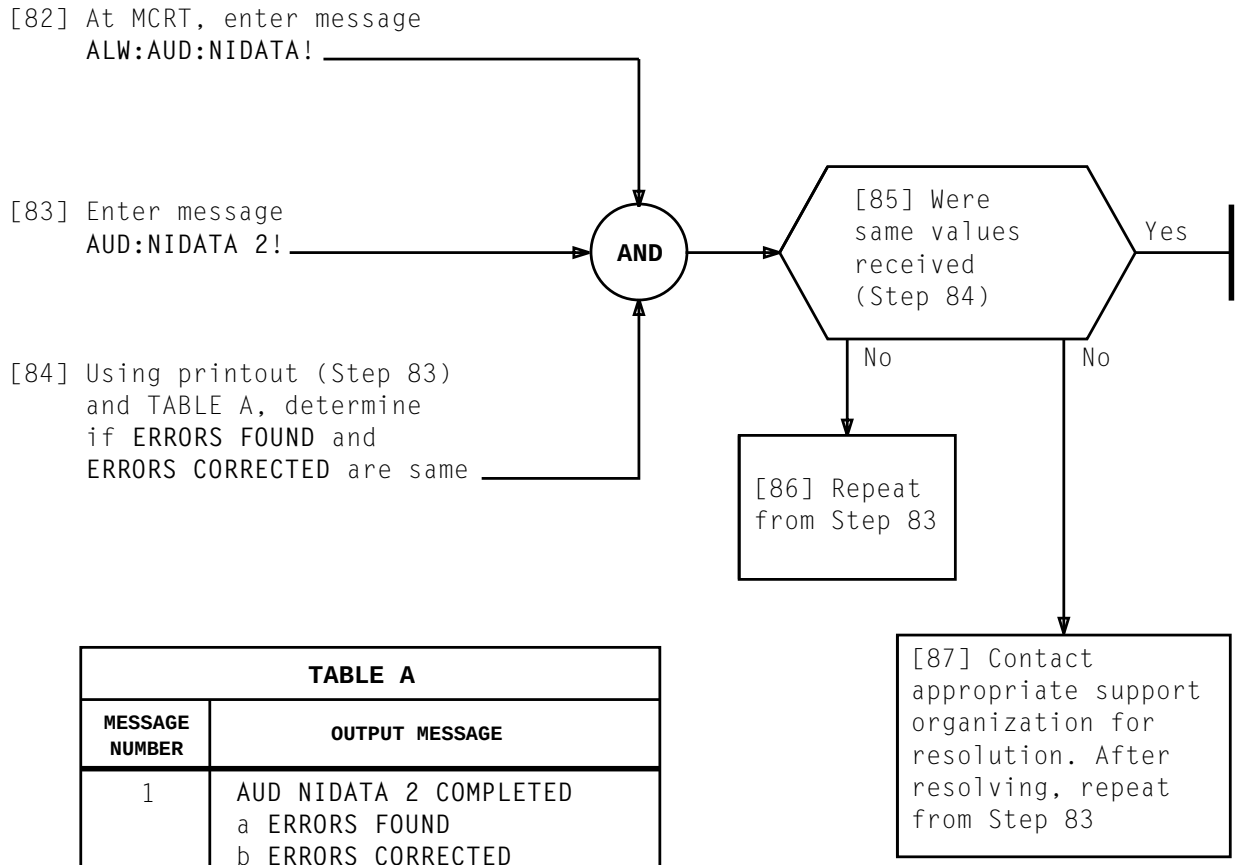

TABLE A

MESSAGE NUMBER	OUTPUT MESSAGE
1	AUD NIDATA 2 COMPLETED a ERRORS FOUND b ERRORS CORRECTED

a = Total number of errors found
b = Total number of errors corrected

CHANGE LINK INTERFACE DATA FOR PRIMARY AND SECONDARY SIGNALING LINKS

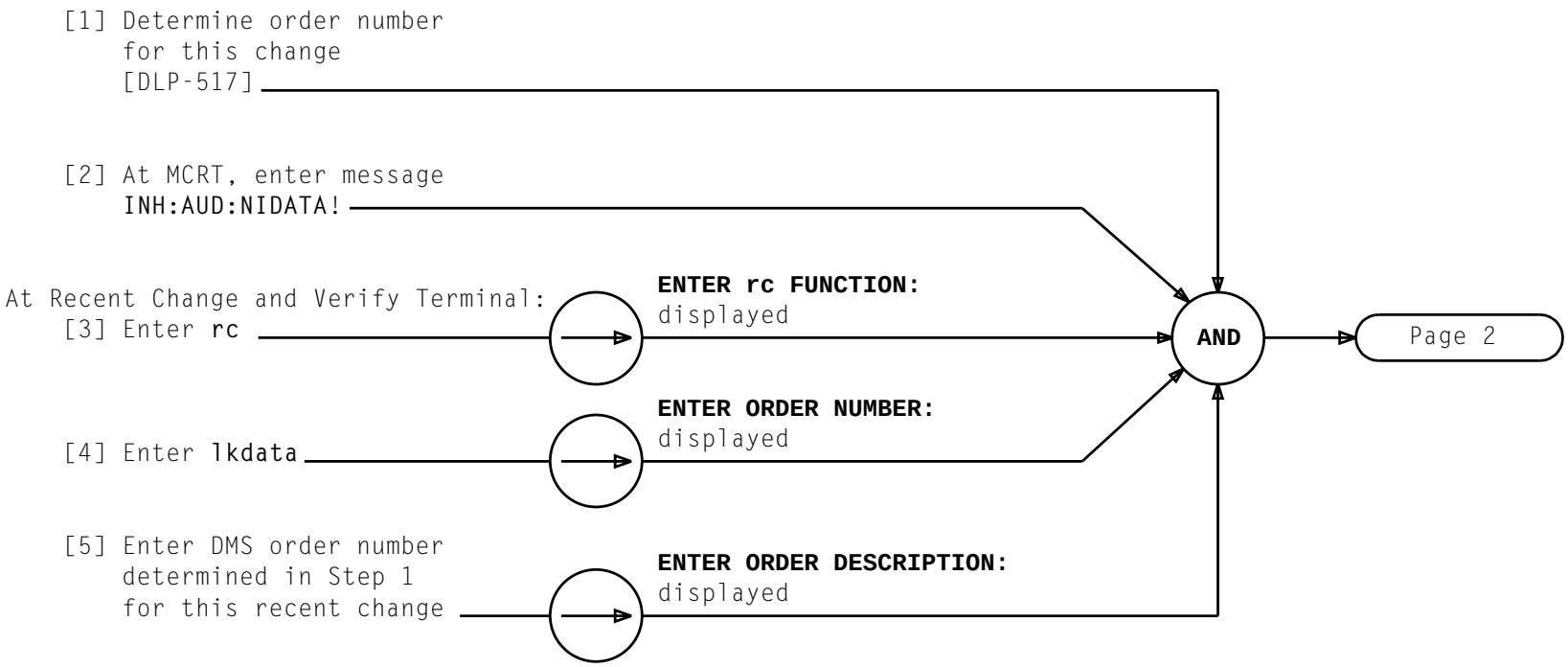

CHANGE PRIMARY AND SECONDARY SIGNALING LINKS TO AVAIL

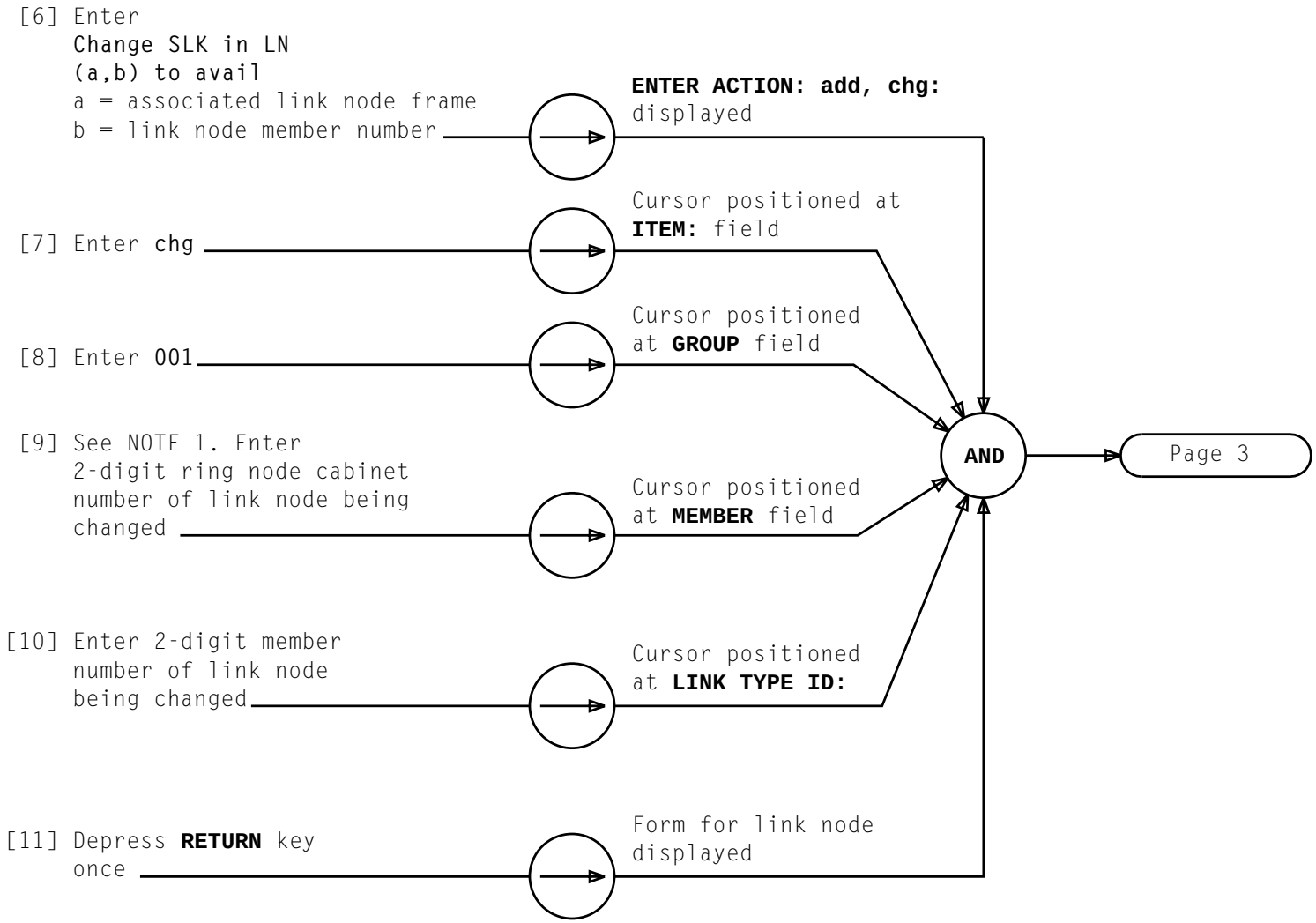

NOTE 1
Change Major State of primary signaling link first; then secondary signaling link

CHANGE PRIMARY AND SECONDARY SIGNALING LINKS TO AVAIL

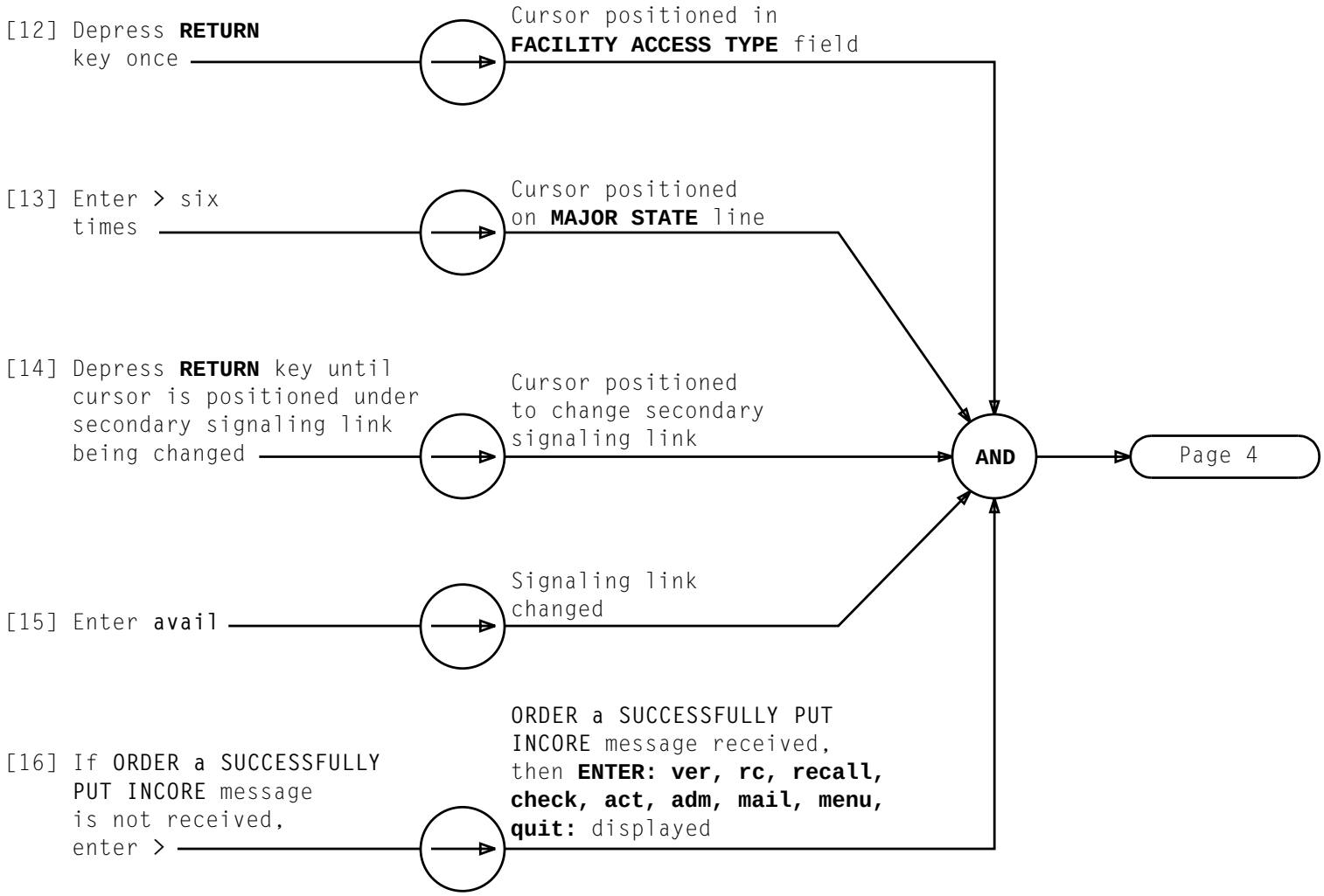

CHANGE PRIMARY AND SECONDARY SIGNALING LINKS TO AVAIL

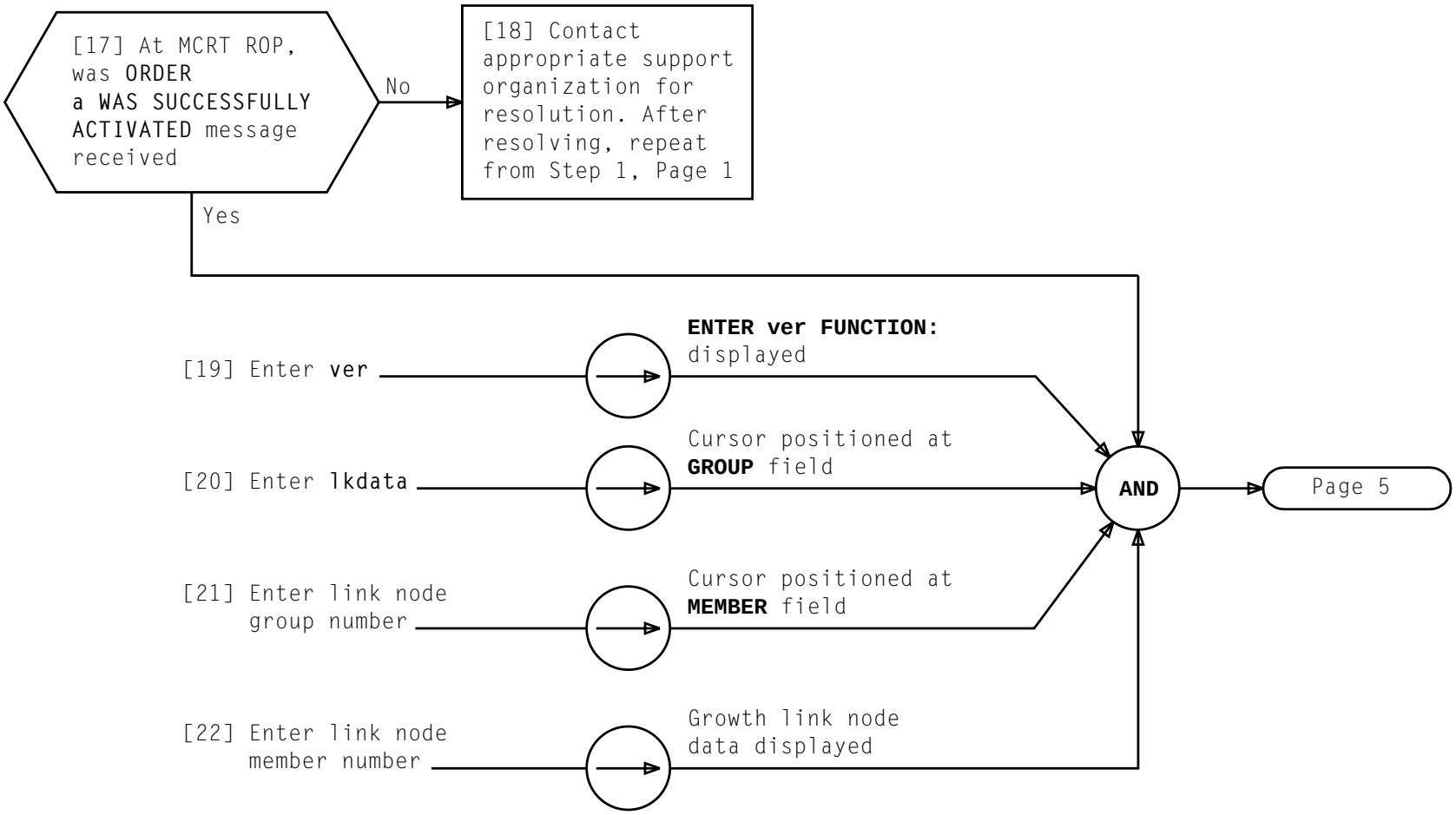
[17] At MCRT ROP, was ORDER a WAS SUCCESSFULLY ACTIVATED message received
No
[18] Contact appropriate support organization for resolution. After resolving, repeat from Step 1, Page 1
Yes
[19] Enter ver
ENTER ver FUNCTION: displayed
[20] Enter lkdata
Cursor positioned at GROUP field
[21] Enter link node group number
Cursor positioned at MEMBER field
[22] Enter link node member number
Growth link node data displayed
AND
Page 5

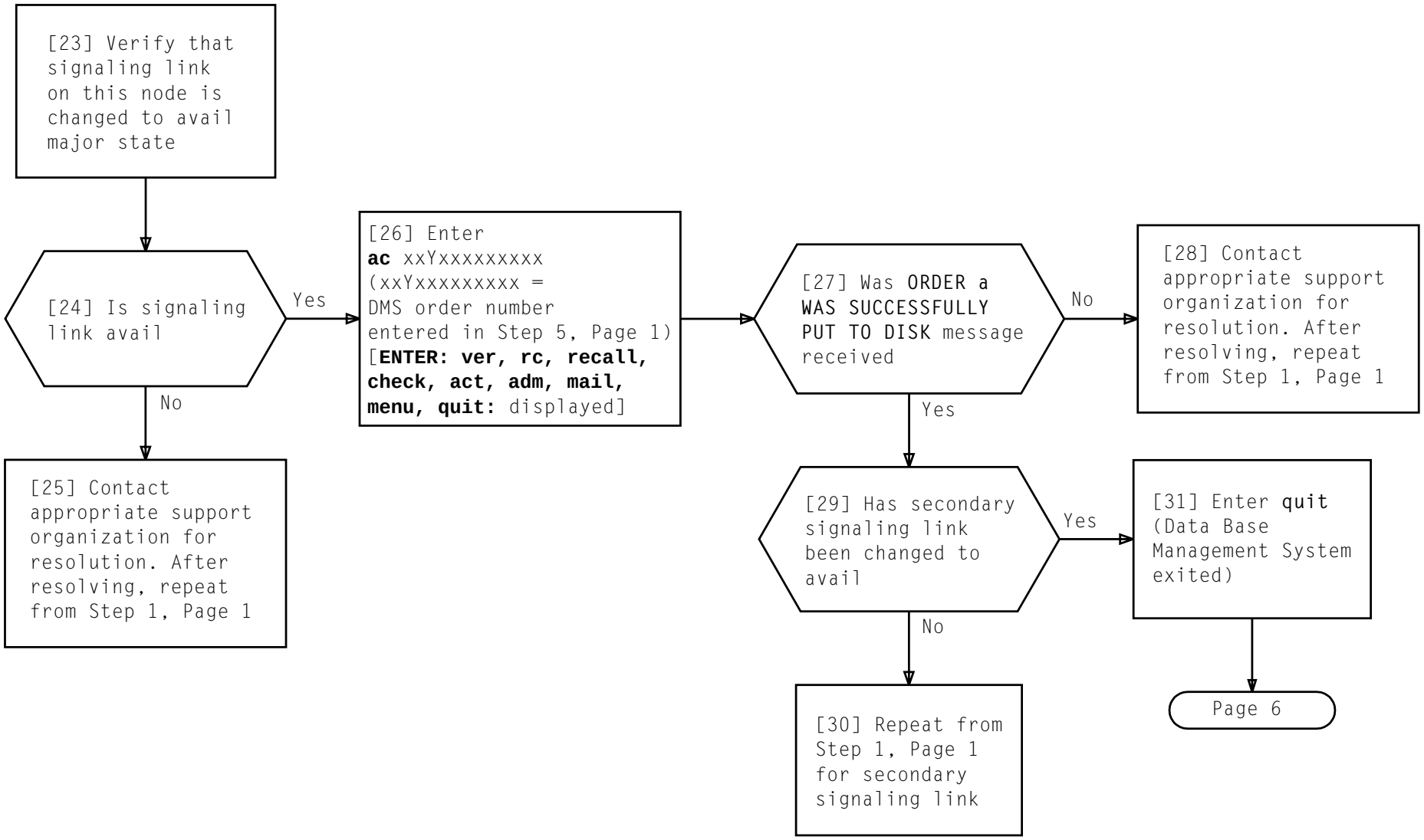

CHANGE PRIMARY AND SECONDARY SIGNALING LINKS TO AVAIL

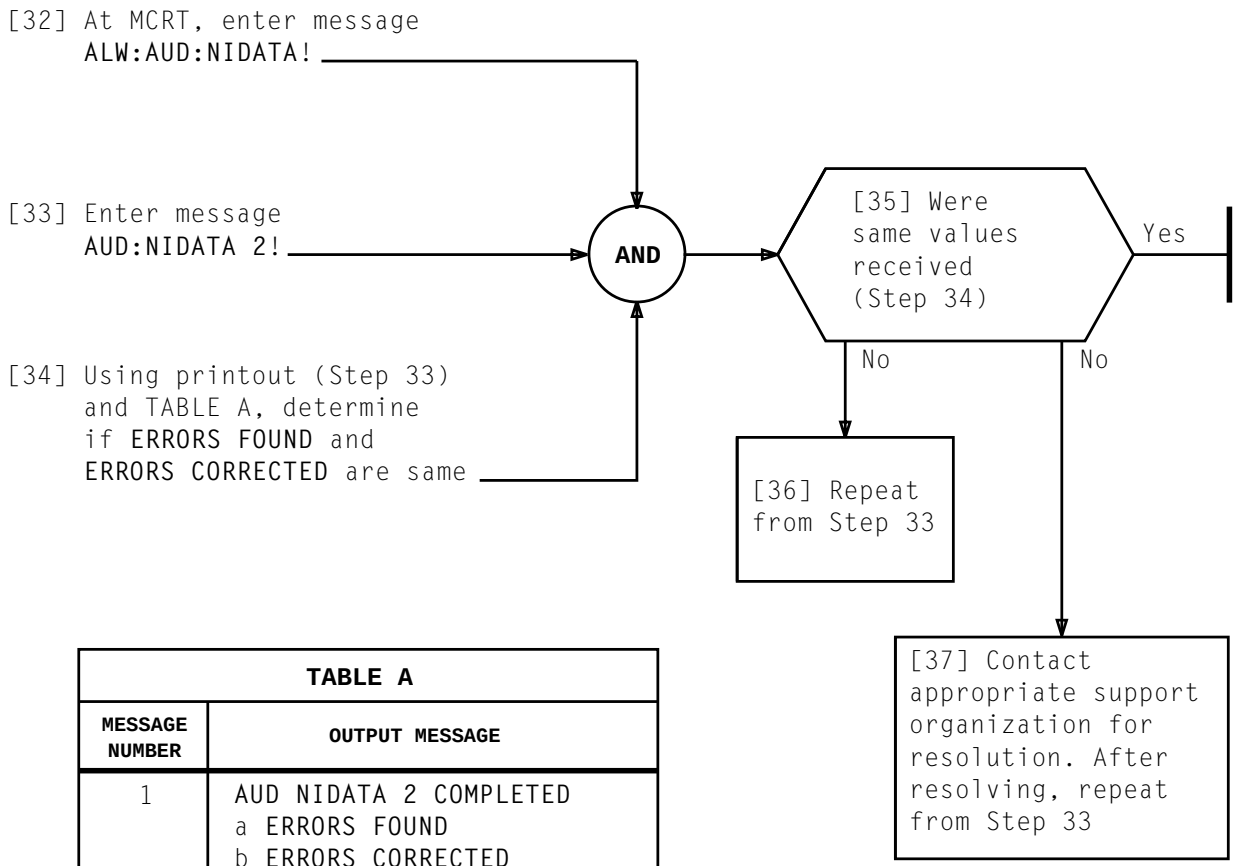

TABLE A

MESSAGE NUMBER	OUTPUT MESSAGE
1	AUD NIDATA 2 COMPLETED a ERRORS FOUND b ERRORS CORRECTED

a = Total number of errors found
b = Total number of errors corrected

CHANGE PRIMARY AND SECONDARY SIGNALING LINKS TO AVAIL

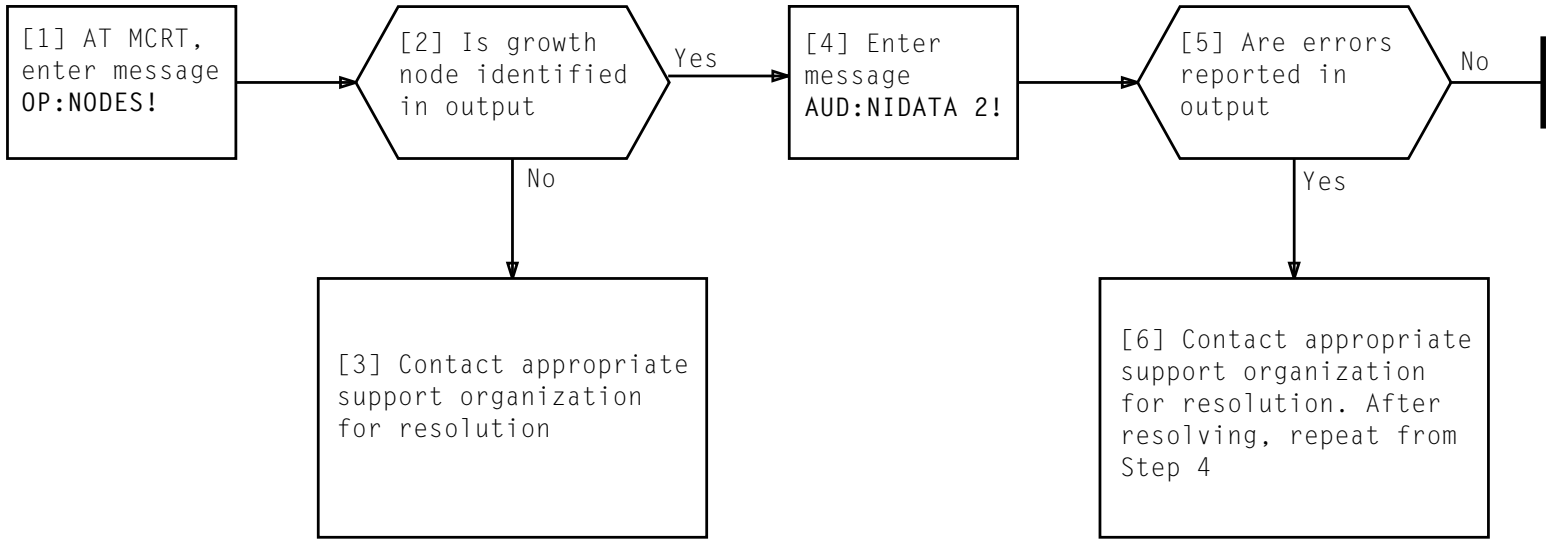

ENSURE OFFICE-DEPENDENT NODE DATA IS POPULATED

1. Ensure 3B Computer has not experienced terminal suspends, bootstraps, diagnostic failures, or overloads within past 24 hours.

2. Ensure both CUs have been diagnosed ATP within past 24 hours.

3. Ensure all system problems have been cleared.

4. Ensure disks and IOPs are duplex and CUs are in ACTIVE-STANDBY mode.

5. All forces on disks must be cleared (EAI page).

6. AT 3B MCRT, enter **SW:PORTSW!.**

7. All forces on disks must be cleared (EAI page).

8. At MCC SYSTEM ALARMS Panel (or 1B MCC), depress **SERVICE DEGRADING FAILURE** (Poke command 810) key to obtain service-degrading report printout. If there are any units listed, make corrective action to clear service-degrading condition of each unit listed before continuing

9. Ensure that APIs are in ACTIVE-STANDBY mode.

10. AT 3B MCRT ROP, locate audit status printout and record any audits that are inhibited. If audits are inhibited, they will have to be allowed before performing growth.

VERIFY SYSTEM STATUS — NEW START

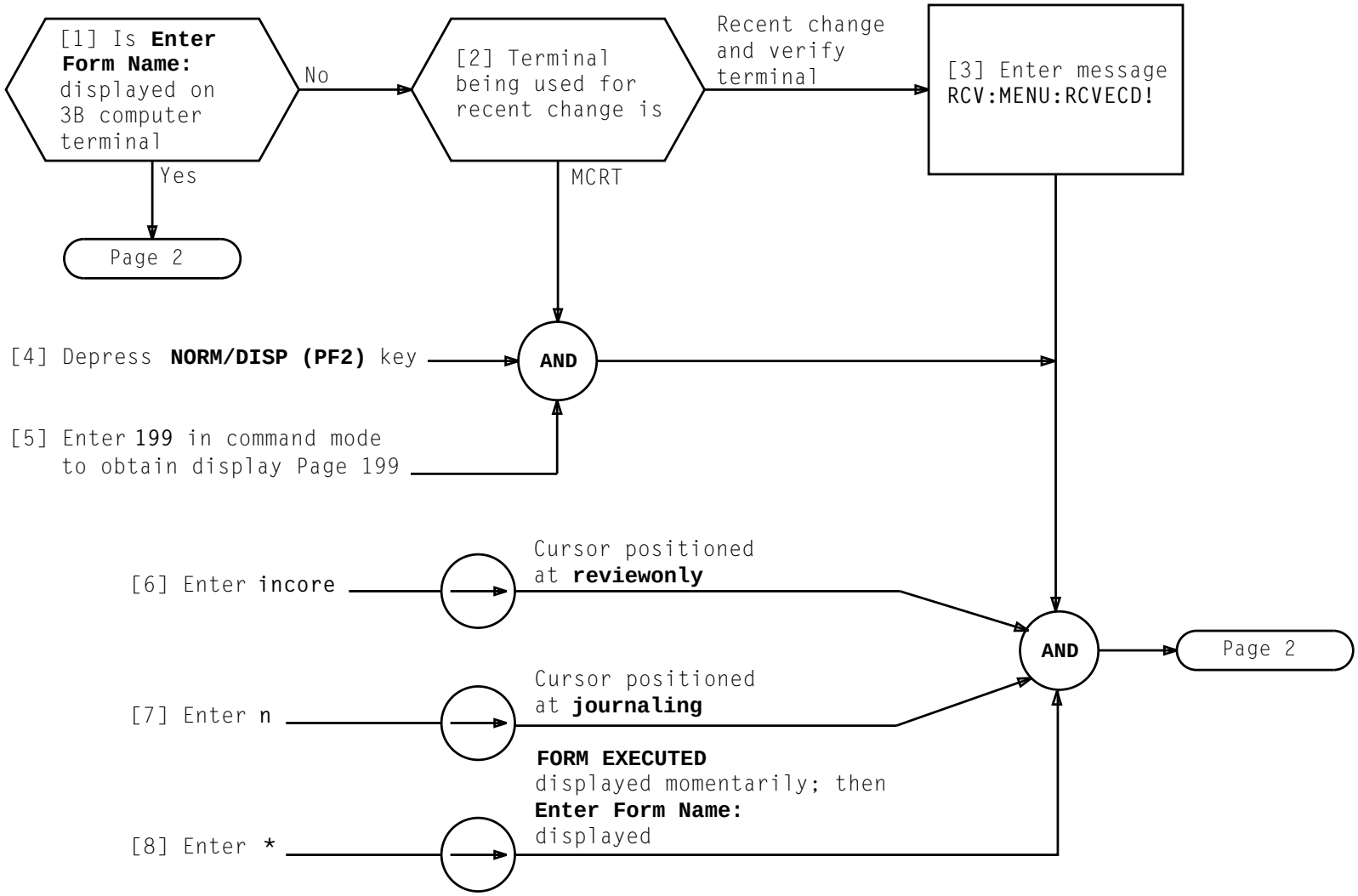

RECENT CHANGE NODE-SPECIFIC DATA FOR GROWTH UNITS, AS REQUIRED

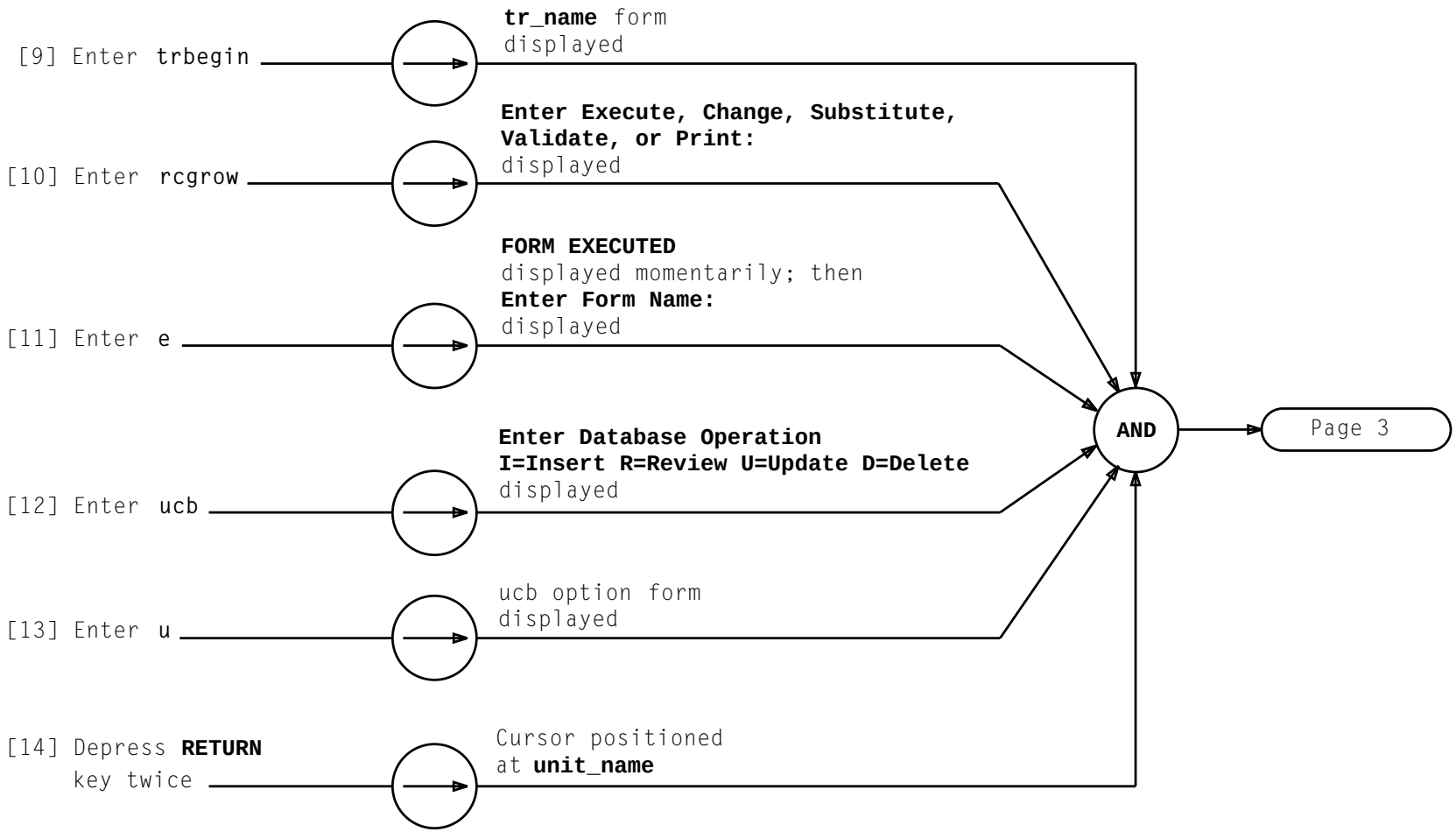

RECENT CHANGE NODE-SPECIFIC DATA FOR GROWTH UNITS, AS REQUIRED

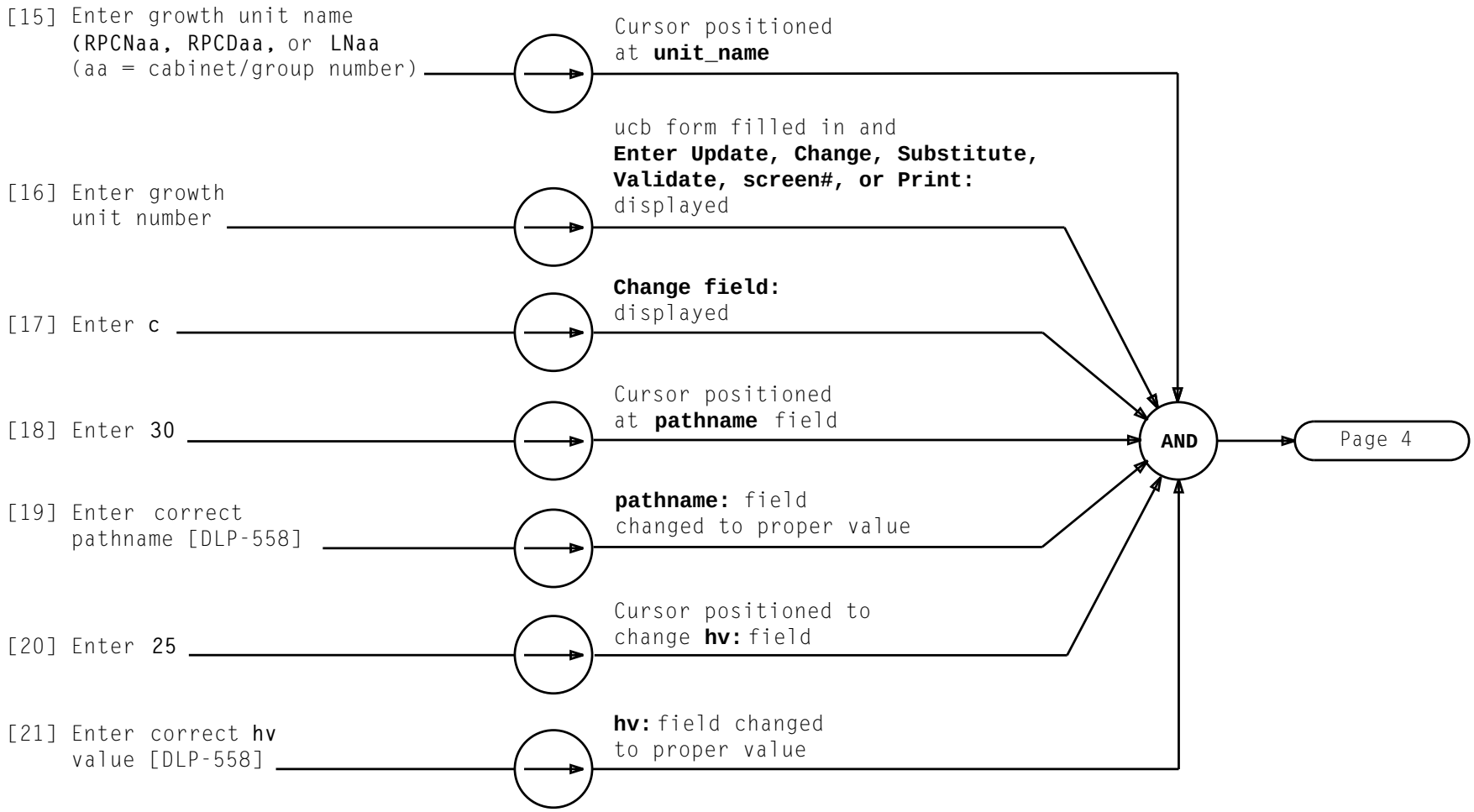

RECENT CHANGE NODE-SPECIFIC DATA FOR GROWTH UNITS, AS REQUIRED

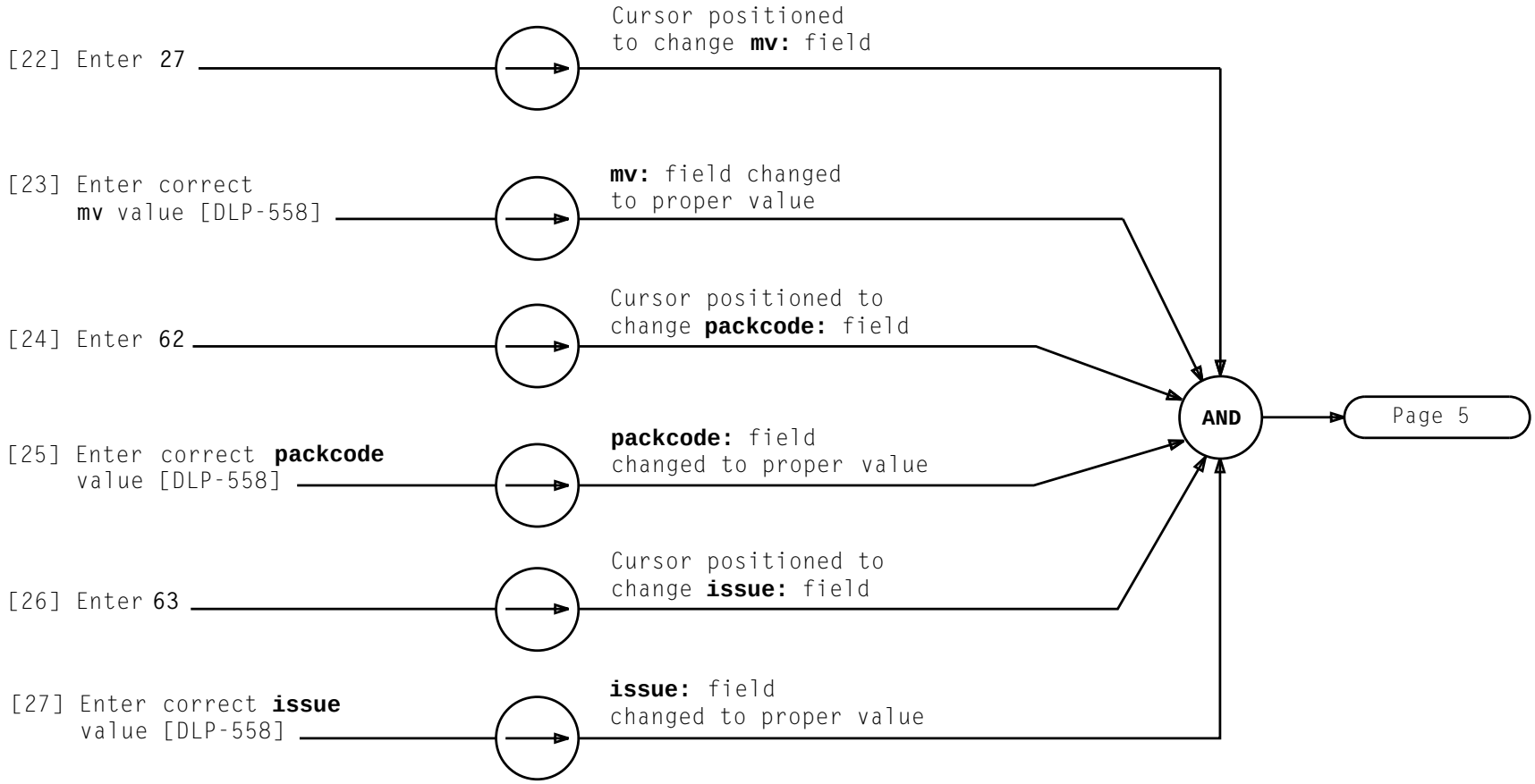

RECENT CHANGE NODE-SPECIFIC DATA FOR GROWTH UNITS, AS REQUIRED

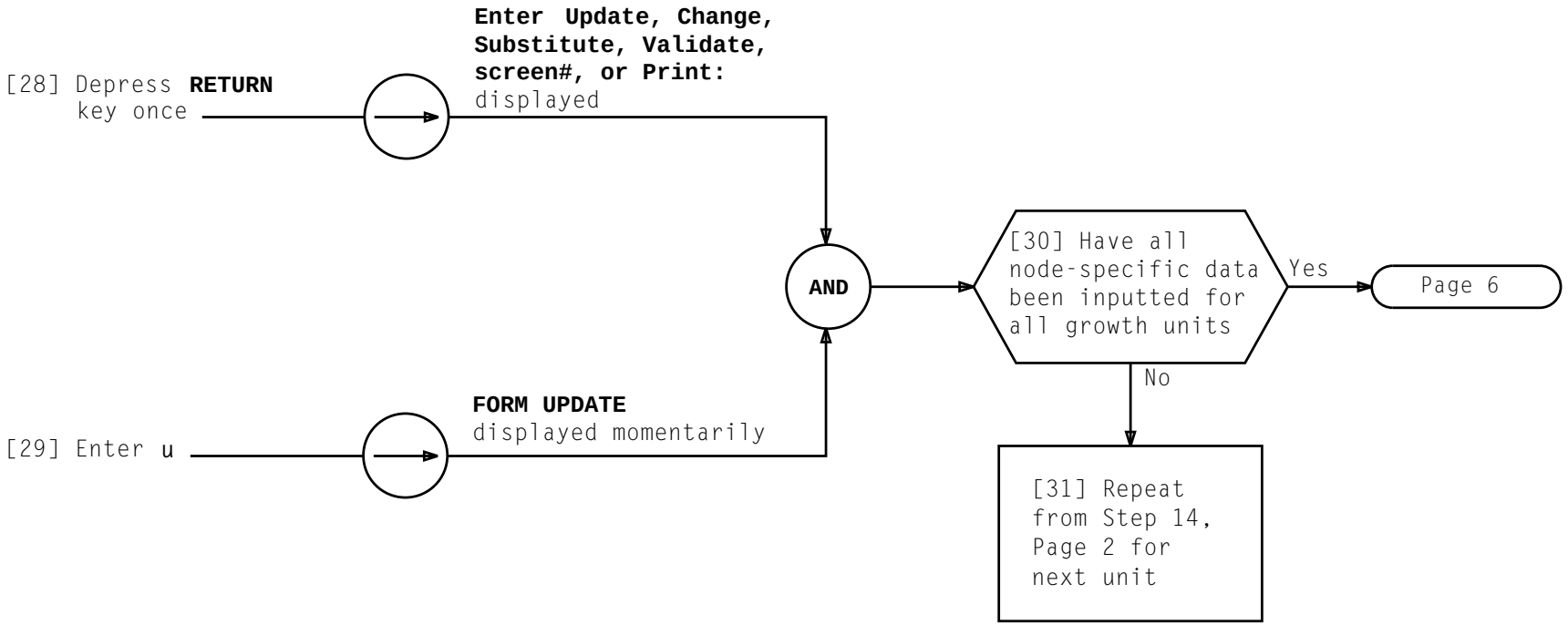

RECENT CHANGE NODE-SPECIFIC DATA FOR GROWTH UNITS, AS REQUIRED

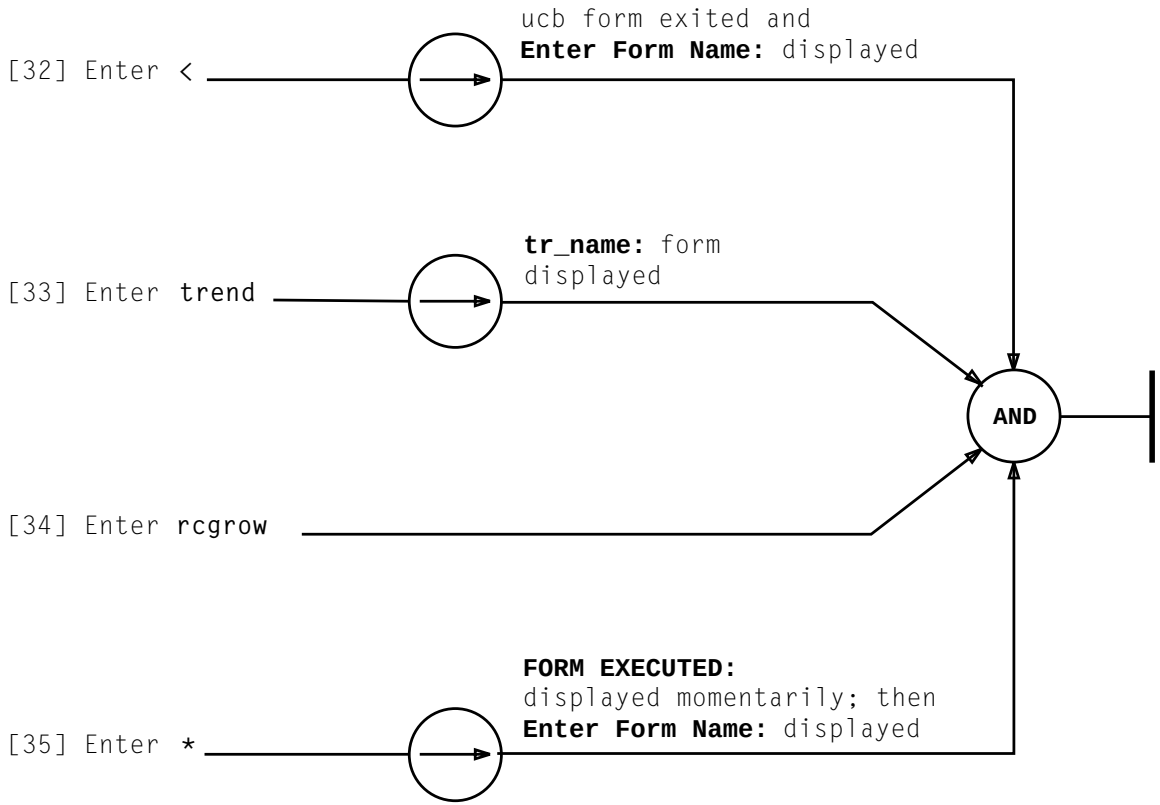

RECENT CHANGE NODE-SPECIFIC DATA FOR GROWTH UNITS, AS REQUIRED

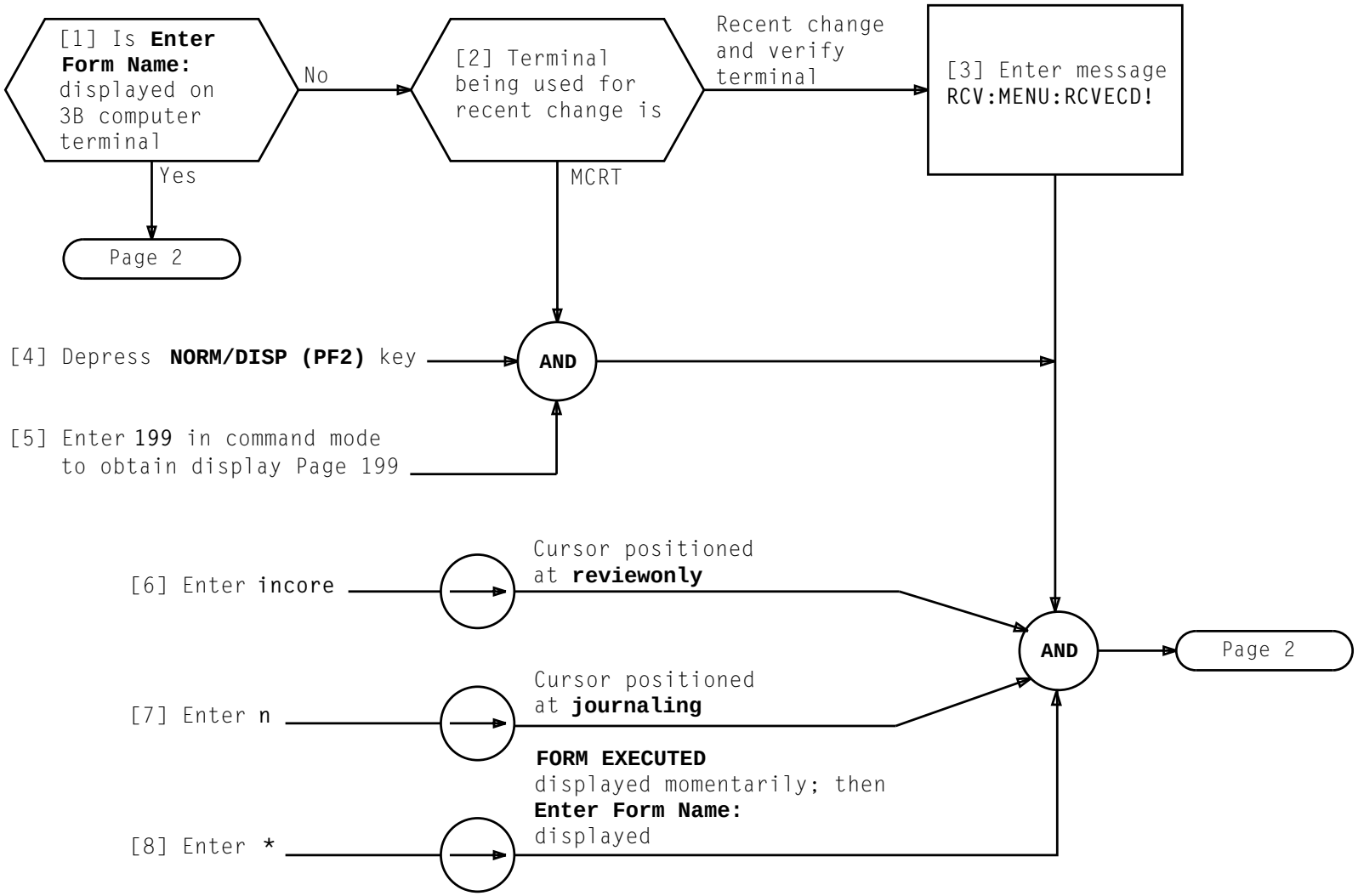

RECENT CHANGE GROWTH UNITS FROM UNEQUIP TO GROW

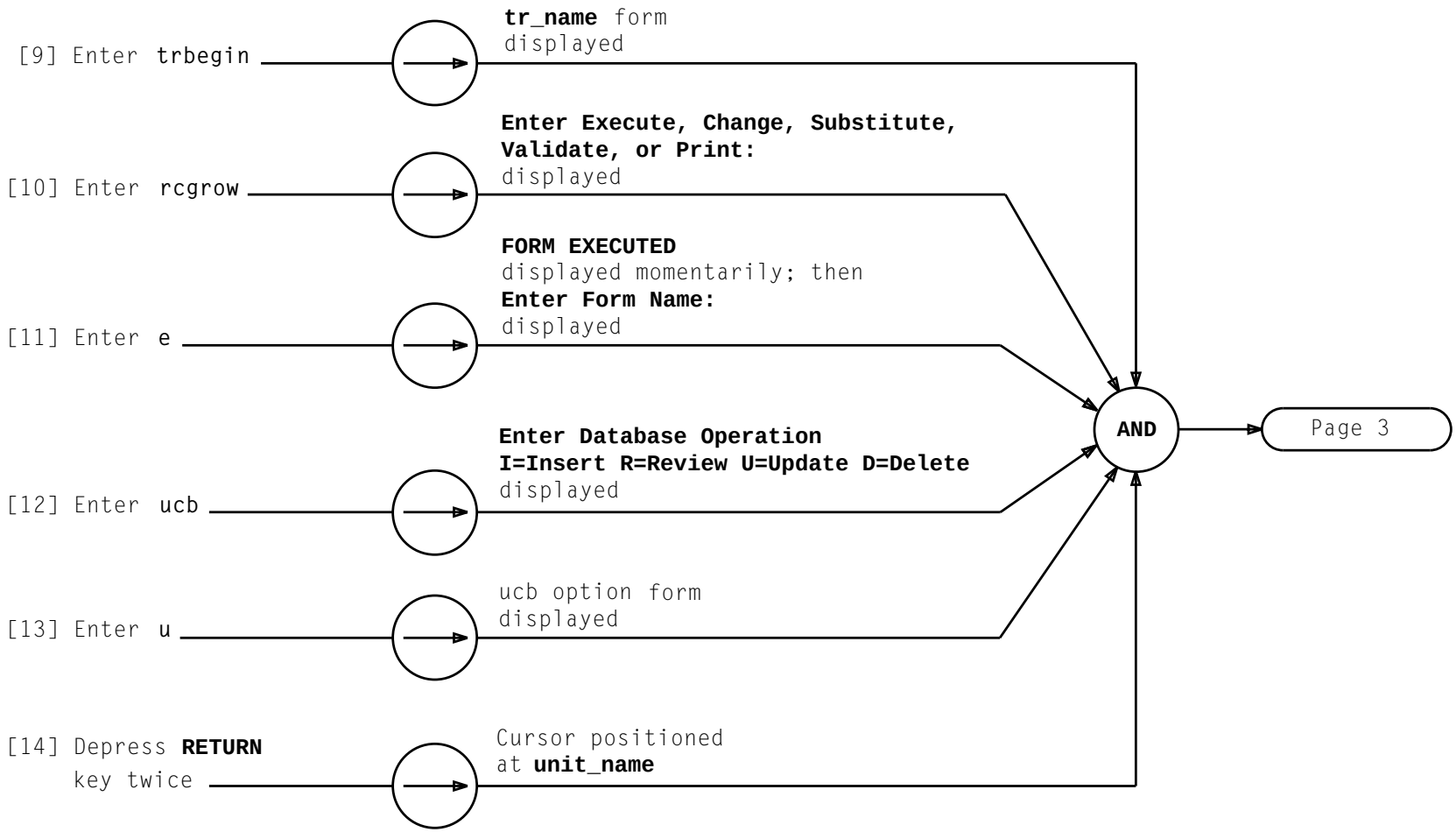

RECENT CHANGE GROWTH UNITS FROM UNEQUIP TO GROW

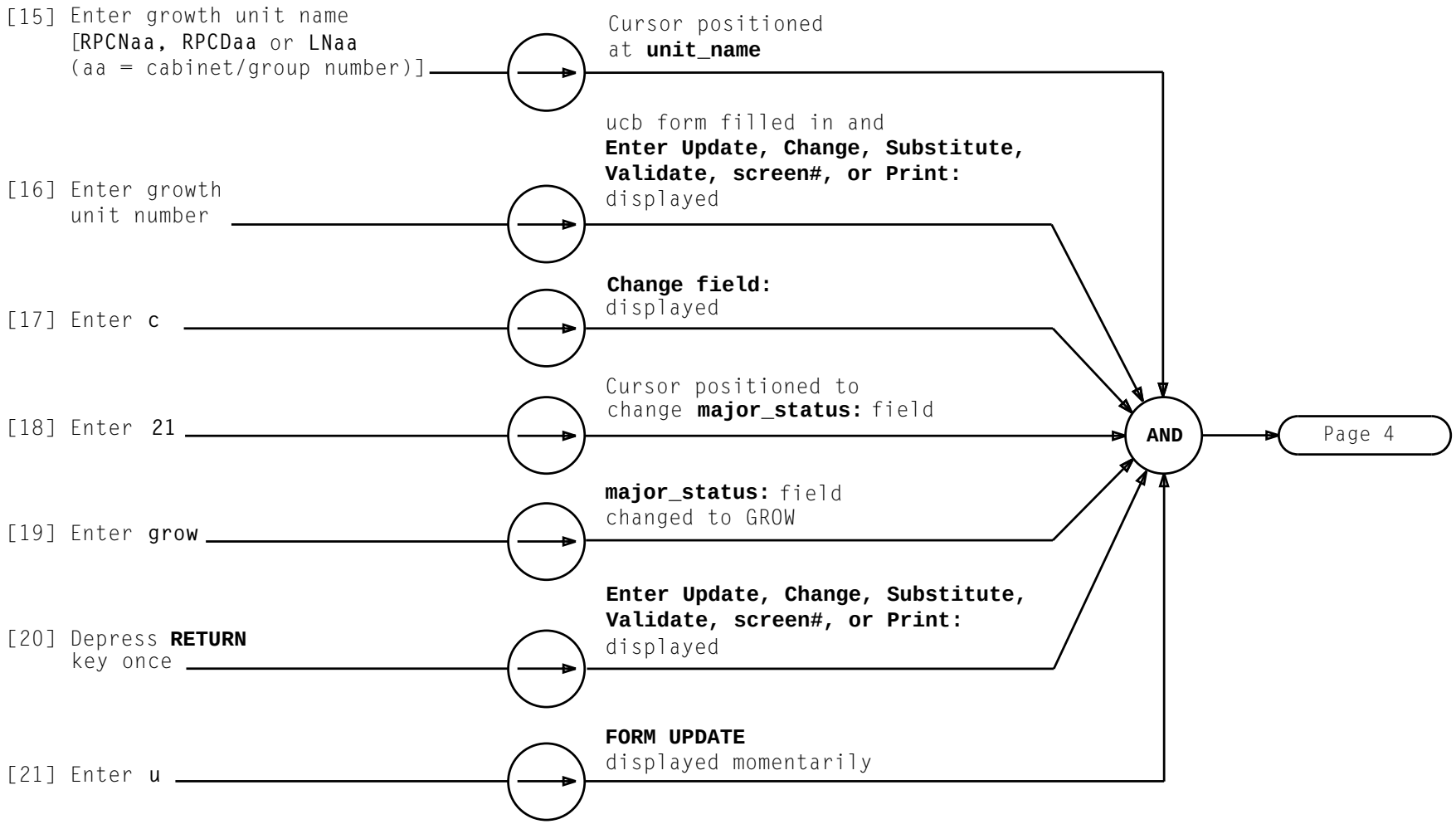

RECENT CHANGE GROWTH UNITS FROM UNEQUIP TO GROW

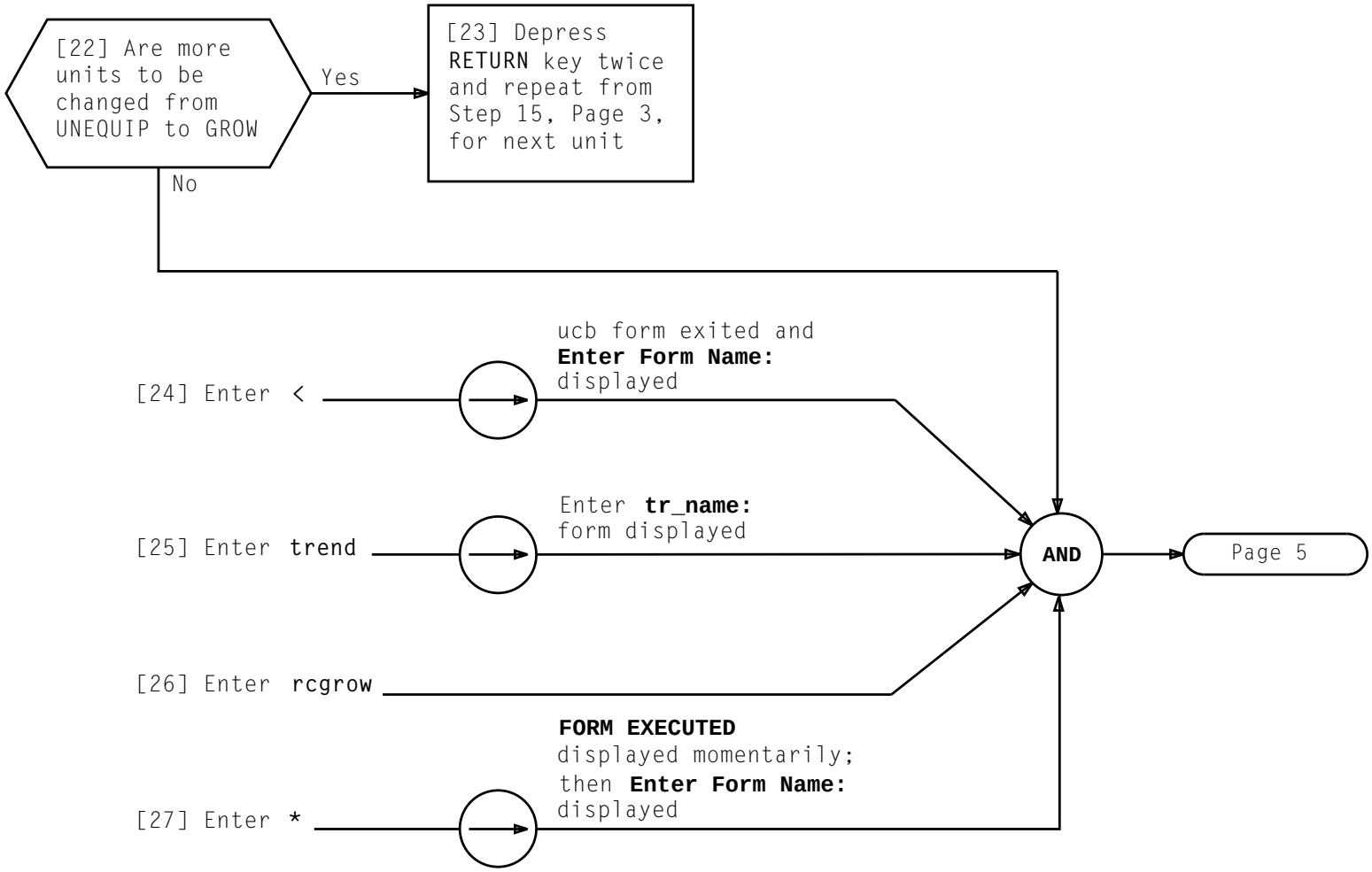

RECENT CHANGE GROWTH UNITS FROM UNEQUIP TO GROW

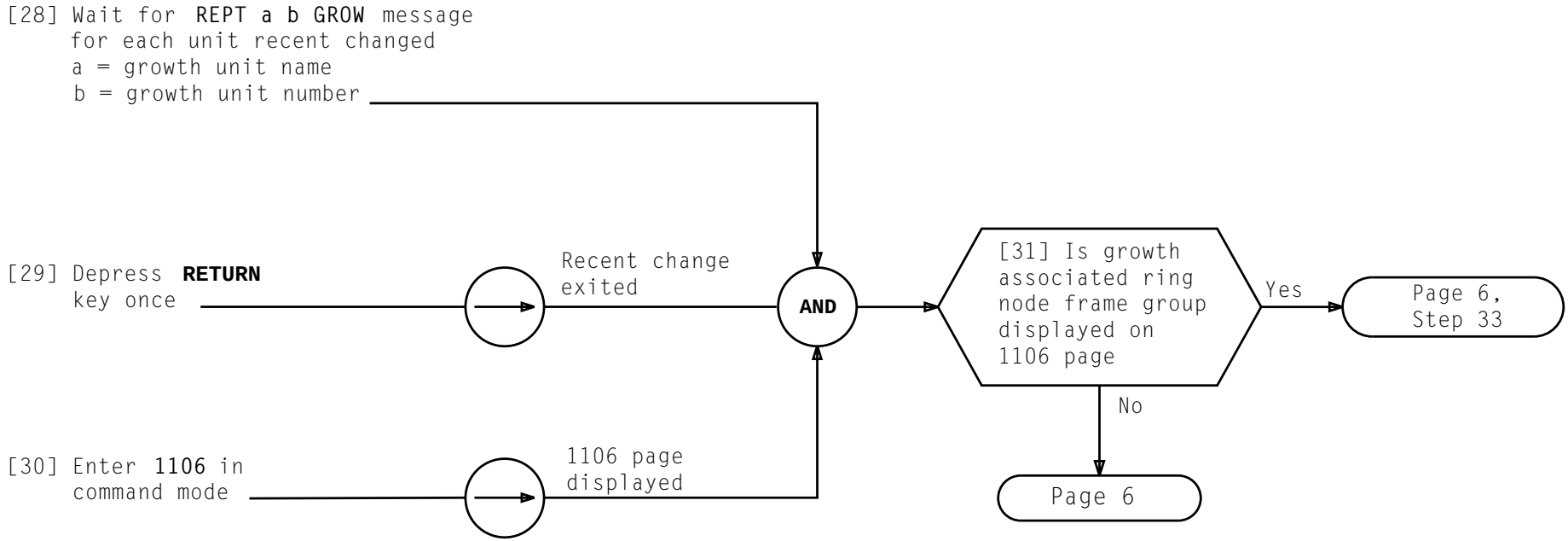

RECENT CHANGE GROWTH UNITS FROM UNEQUIP TO GROW

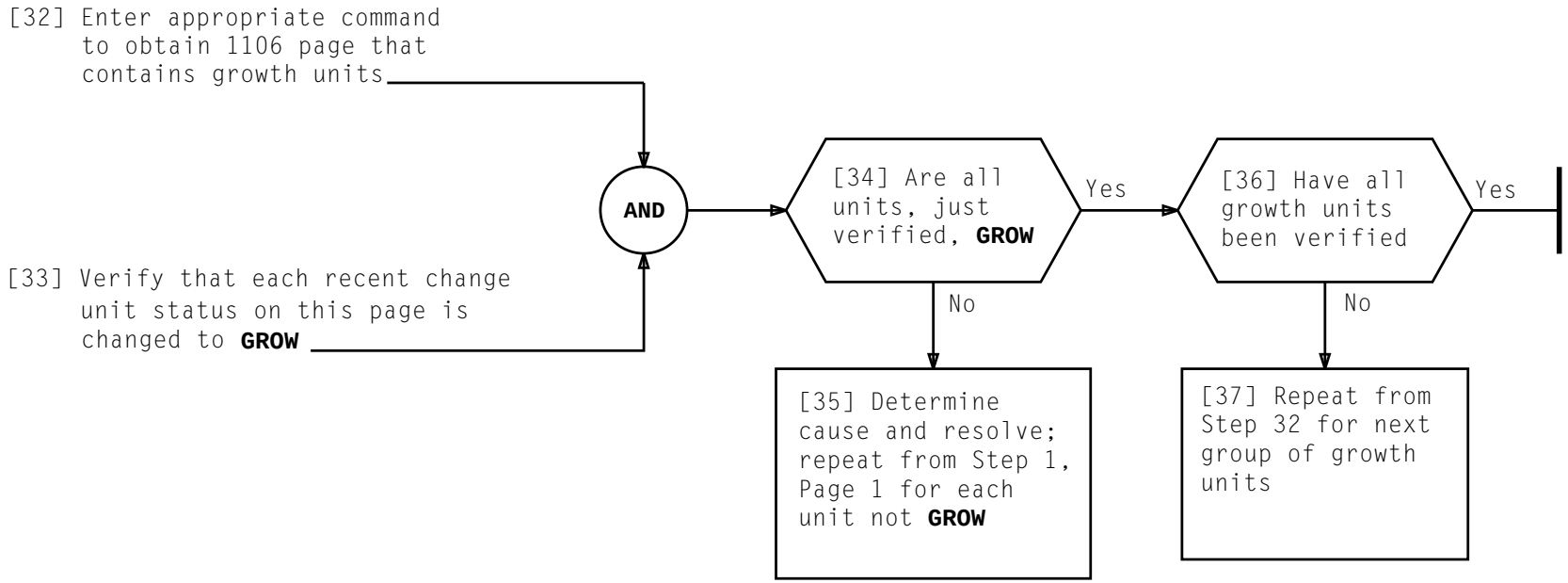

RECENT CHANGE GROWTH UNITS FROM UNEQUIP TO GROW

[1] Determine location of interface buffer (IFB) packs within frames 00 and 32

[2] Determine status of IFB packs within CNI ring (higher or lower) DLP-545

[3] Using the information from Steps 1 and 2, determine **hv** value of each node to be equipped from Table A (Sheet 2) and record on DLP-558

[4] Determine **mv** value of each node to be equipped from Table B (Sheet 3) and record on DLP-558

[5] Determine **pack code** value of each node to be equipped from Table C (Sheet 3) and record on DLP-558

[6] Determine **pathname** value of each node to be equipped from Table D (Sheet 3) and record on DLP-558

[7] Determine **issue** value of each node to be equipped from Table E (Sheet 3) and record on DLP-558

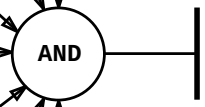

DETERMINE NODE DATA FOR ALL GROWTH NODES

TABLE A							
Ring Interface Pack(s)	**IFB Type**	**IFB Position**	**HV Value**	**Ring Interface Pack(s)**	**IFB Type**	**IFB Position**	**HV Value**
UN122/UN123	None	N/A	0x0100	UN303	None	N/A	0x8000
UN122/UN123	TN918	Higher	0x0110	UN303	TN918	Higher	0x8010
UN122/UN123	TN1508	Higher	0x0150	UN303	TN1508	Higher	0x8050
UN122/UN123	TN1803	Higher	0x0160	UN303	TN1803	Higher	0x8060
UN122/UN123	TN918	Lower	0x0101	UN303	TN918	Lower	0x8001
UN122/UN123	TN1508	Lower	0x0105	UN303	TN1508	Lower	0x8005
UN122/UN123	TN1803	Lower	0x0106	UN303	TN1803	Lower	0x8006
UN122B/UN123B	None	N/A	0x0900	UN303B*	None	N/A	0x9000
UN122B/UN123B	TN918	Higher	0x0910	UN303B*	TN918	Higher	0x9010
UN122B/UN123B	TN1508	Higher	0x0950	UN303B*	TN1508	Higher	0x9050
UN122B/UN123B	TN1803	Higher	0x0960	UN303B*	TN1803	Higher	0x9060
UN122B/UN123B	TN918	Lower	0x0901	UN303B*	TN918	Lower	0x9001
UN122B/UN123B	TN1508	Lower	0x0905	UN303B*	TN1508	Lower	0x9005
UN122B/UN123B	TN1803	Lower	0x0906	UN303B*	TN1803	Lower	0x9006
UN122C/UN123B	None	N/A	0x1900	UN304*	None	N/A	0xc000
UN122C/UN123B	TN918	Higher	0x1910	UN304*	TN918	Higher	0xc010
UN122C/UN123B	TN1508	Higher	0x1950	UN304*	TN1508	Higher	0xc050
UN122C/UN123B	TN1803	Higher	0x1960	UN304*	TN1803	Higher	0xc060
UN122C/UN123B	TN918	Lower	0x1901	UN304*	TN918	Lower	0xc001
UN122C/UN123B	TN1508	Lower	0x1905	UN304*	TN1508	Lower	0xc005
UN122C/UN123B	TN1803	Lower	0x1906	UN304*	TN1803	Lower	0xc006
				UN397	None	N/A	0x4000
				UN397	TN918	Higher	0x4010
				UN397	TN1508	Higher	0x4050
				UN397	TN1803	Higher	0x4060
				UN397	TN918	Lower	0x4001
				UN397	TN1508	Lower	0x4005
				UN397	TN1803	Lower	0x4006

TABLE A (Contd)			
Ring Interface Pack(s)†	**IFB Type**	**IFB Position**	**HV Value‡**
UN303B	None	N/A	0x200 9000
UN303B	TN918	Higher	0x200 9010
UN303B	TN1508	Higher	0x200 9050
UN303B	TN1803	Higher	0x200 9060
UN303B	TN918	Lower	0x200 9001
UN303B	TN1508	Lower	0x200 9005
UN303B	TN1803	Lower	0x200 9006
UN304	None	N/A	0x200 c000
UN304	TN918	Higher	0x200 c010
UN304	TN1508	Higher	0x200 c050
UN304	TN1803	Higher	0x200 c060
UN304	TN918	Lower	0x200 c001
UN304	TN1508	Lower	0x200 c005
UN304	TN1803	Lower	0x200 c006

* If, Node is Non-DLN, use this pack
† If, Node is DLN, use these packs
‡ HV Value for DLN's is used on both LN and RPCD UCB forms

DETERMINE NODE DATA FOR ALL GROWTH NODES

TABLE B

Node Type	MV Value LI Equipage			
	LI 0 Only	LI 1 Only	Both LIs	No LIs
CCS7 (without IRNs)	Blank*			
CCS7 (with IRNs)	0x43			
DCHAN (without T1FA)†	0x3a	0x3b	0x3c	
DCHAN (with T1FA)†	0x40	0x41	0x42	
DLN30 16 mbytes				0x23
IUN (without IRNs)				0x1
IUN (with IRNs, IRN-B or IRN2)				0x3
DLNE (RPCD)				0x23
RPCN				Blank*

* Blank field is obtained by entering an apostrophe.
† HDRNC can only be equipped with LI 0.

TABLE C

Node Type	Pack Code (Note)
CCS7 (without IRNs)	CNI7
CCS7 (with IRNs)	C7I
DCHAN (without T1FA)	PBXD
DCHAN (with T1FA)	PBXT
DLN30 16 mbytes	DLNE
IUN (without IRNs)	IUN
IUN (with IRNs or IRN-B)	IRN
IUN (with IRN2)	IRN2
DLNE (RPCD)	Blank *
RPCN	RPC

Note: Pack codes must be entered in capital letters.
* Blank field is obtained by entering an apostrophe.

TABLE D

Node Type	Path Name
DLN30 16 mbytes	pu/iun
DLNE (RPCD)	pu/DLNI_NA
RPCN	pu/rpc
All Other Nodes (without IRN2)	pu/iun
All Other Nodes (with IRN2)	pu/irn2

TABLE E

Node Type	Issue
CCS7 (TN1316)	1
DLN30 16 mbytes	1
DLNE (RPCD)	1
RPCD	1
DCHAN (with IRN2)	3
RPCN	1
IUN (UN303, UN304, UN303B)	1
All Other Nodes	1

* Blank field is obtained by entering an apostrophe.

[1] At MCRT, if 1108 page is not displayed, enter **1108** in command mode

[2] If growth signaling link is not displayed on 1108 page, enter **406** (for next page) or **407** (for previous page) until growth signaling link is displayed

[3] Ensure that LINK STATE for growth signaling link is UNAV/GROW

[4] Enter message for growth signaling link
CHG:SLK(a,b,c,d);TEST!
a = group number (0-63)
b = member number (1-15)
c = link interface pack number (0 or 1 for SSI, 0 for HDRNC)
d = port number (0-3)

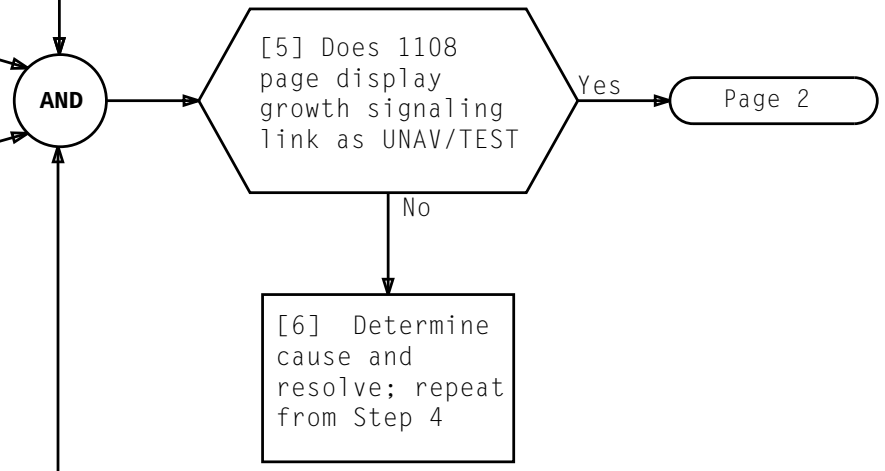

TEST GROWTH DCHAN SIGNALING LINKS – EXTERNAL LINK CHECK

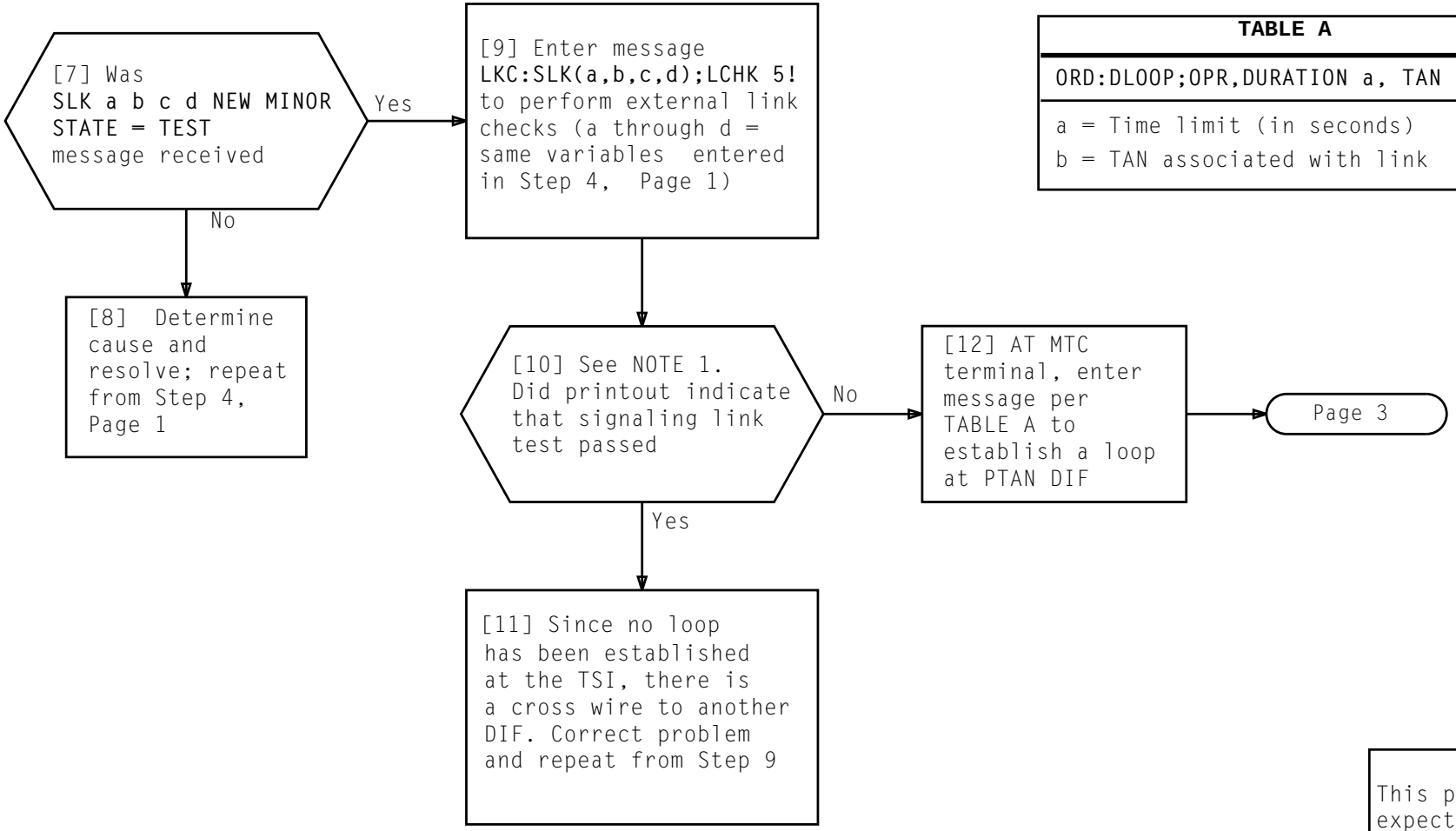

TABLE A

ORD:DLOOP;OPR,DURATION a, TAN b!
a = Time limit (in seconds)
b = TAN associated with link

NOTE 1

This printout is expected to indicate test fail. If printout indicates that test passed, then either cross connect is wired to wrong DIF or there is a looping plug at the DSX

TEST GROWTH DCHAN SIGNALING LINK(S) — EXTERNAL LINK CHECK

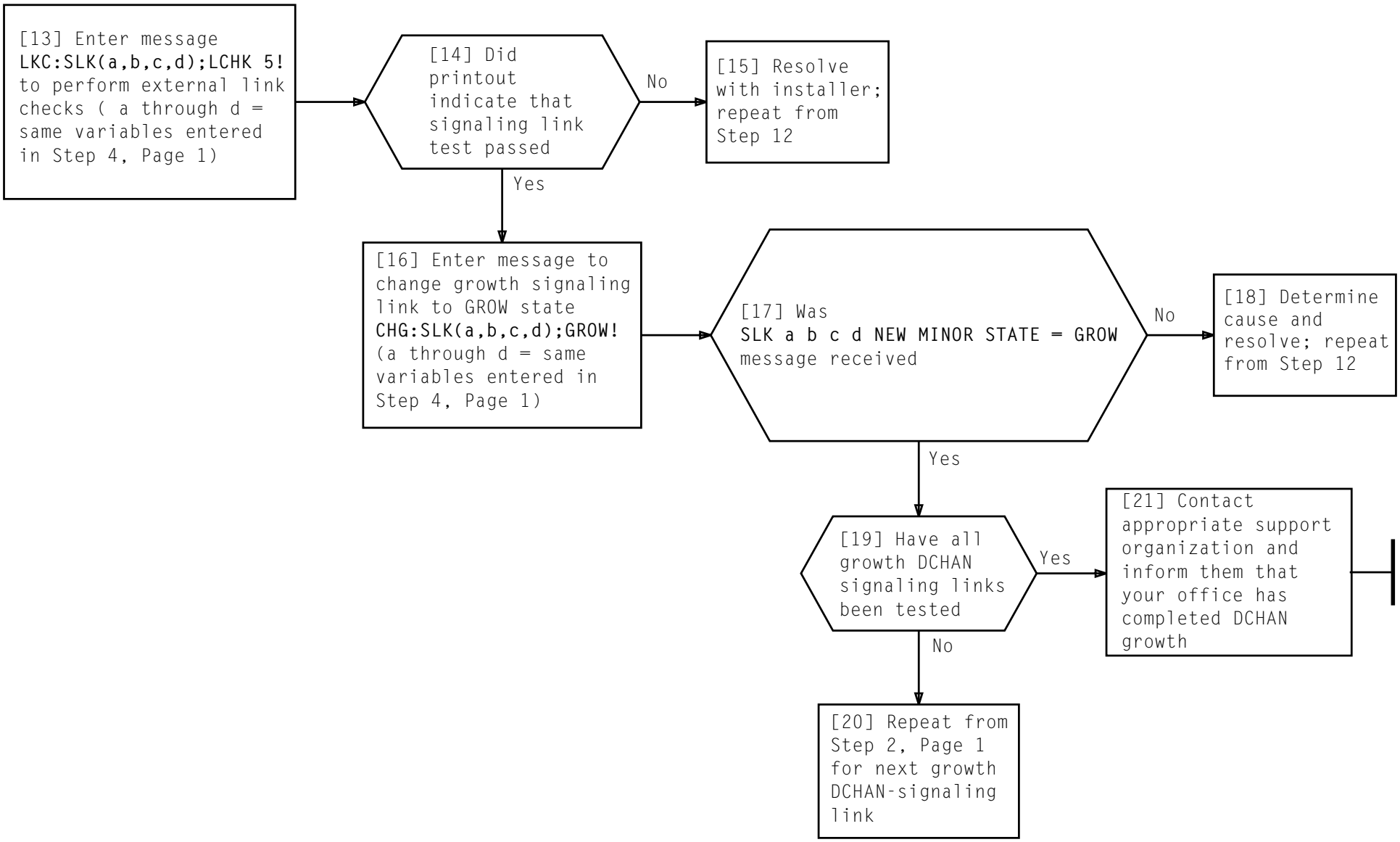

TEST GROWTH DCHAN SIGNALING LINKS — EXTERNAL LINK CHECK

[1] At MTC terminal, enter **VER:TSG:CIN OACI *DCHN***!** to verify T1FA to PTAN (DS-1 facility)

[2] Was printout received per FIG 1

No → [3] Determine cause and resolve; repeat from Step 1

Yes

[4] See NOTES 1 and 2. Using printout (Figure 1), identify each TAN associated with the first time slot (FTS) 1, 25, 49, 73, and/or 97

[5] At MTC terminal using TAN assignment, enter **VER:TRKNAME, TAN b!** message to determine DIF, DIU, and DG (PTAN/DIF)

AND

[6] Was **VER:TRKNAME b:a** message received

Yes → [8] On Table A, record DIF, DIU, and DG information

No → [7] Determine cause and resolve; repeat from Step 5

[9] Have all TANs identified in Step 4 been verified and recorded

Yes → Page 2

No → [10] Repeat from Step 5

TABLE A		
DIF	DIU	DG
___	___	___
___	___	___
___	___	___
___	___	___
___	___	___
___	___	___
___	___	___
___	___	___

TAN Assignment (3110001)

First Time Slot

```
M 24 VER:TSG,OPT(TRUNKS):
                                        D1D2   N,
                          TAN
  QTRK  FTN   TSI SPC LVL FTS        FCHAN     STATUS
  24,    0,   31,  1,   0,  1,         0,      CAD,
  24,   24,   34,  1,   0, 41,         0,      CAD,
   2,   40,   35,  1,   0,  5,         0,      CAD,
   4,   50,   35,  1,   0,  8,         0,      CAD,
  17,   10,   35,  1,   0, 49,         0,      CAD,
   2,    1,   36,  1,   0,  6,         0,      CAD,
  24,   92,   36,  1,   0, 25,         0,      CAD,
  24,   70,   42,  1,   0, 11,         0,      CAD,
  24,  116,   46,  1,   0,  6,         0,      CAD,
00/00/00 00:24:22
#791
```

FIG 1. Typical VER:TSG,OPT Message Printout

NOTES

1. FTS is first time slot assignment in module group of 24.
2. TAN assignment must be enterd as 7 digits (FTS is 3 digits)

DETERMINE RNA FOR THE T1FA AND ALL GROWTH NODES

[11] Using TABLE B, determine which RNA of DCHAN T1FA Control Node (TCN) is being grown

[12] Using TABLE A, determine which PTAN/DIF corresponds to RNA being grown (Step 11) on T-XXXX-Hy-464 drawing (FIG. 2)

[13] See NOTE 3. At RNC, obtain DSX-1 panel and jack location for T1FA appearance

[14] At DSX, install cross connection from T1FA to PTAN/DIF

AND

TABLE B							
SSI Ring Node				High-Density Ring Node			
Cabinet 00		Cabinet 32		Cabinet 06		Cabinet 38	
Node	RNA	Node	RNA	Group	RNA	Group	RNA
4	0004	4	0516	7	115	39	627
14	0014	14	0526	10	163	42	675
—	—	—	—	11	179	43	691

T-XXXX-HX-464
PAGE XX

NETWORK ASSIGMENT								CONNECTING EQUIPMENT IDENTIFICATION											MFS		D4 BAY				SP ASSIGNMENT				
CHG	TSIC	SPL	VL	TIME SLOT	EST	ESU	UNIT	OWNER	EQUIP	UNIT TYPE	MEM NO.	CKT NO.	FRAME LOCATION CODE	ABBR. ORDER CODE	SIGNAL	LEAD	DESIG	CCITT	EC32K	T-DRAWING	FIG	FRAME	PANEL	MEM NO.	CHAN	BANK	DIGRP	CHAN NO.	CHG	TYPE	TRUNK SCANNER NUMBER FR	ROW	COL	LINK
A	07	0	4	001			20	L	F	DCHN	0629	000	06022.16	0910	E00					T-1P207-01	1								A	2	04	160	01	
A	07	0	4	002			20	L	F	DCHN	0630	000	06022.16	0910	E00					T-1P207-01	1								A	2	04	160	02	
A	07	0	4	003			20	L	F	DCHN	0631	000	06022.16	0910	E00					T-1P207-01	1								A	2	04	160	03	
A	07	0	4	004			20	L	F	DCHN	0632	000	06022.16	0910	E00					T-1P207-01	1								A	2	04	160	03	

TAN DIU RNA

ISSUE XX
SHEET XX
DIF XX
SOD 20
XXX CHANNEL ASSIGNMENTS

DIF

FIG 2. Typical Office T-464 Drawing

NOTE 3
DSX location label is on the inside of RNC door

Issue 6	SEP 1998
234-153-055	DLP
PAGE 2 of 2	556

DETERMINE RNA FOR THE T1FA AND ALL GROWTH NODES

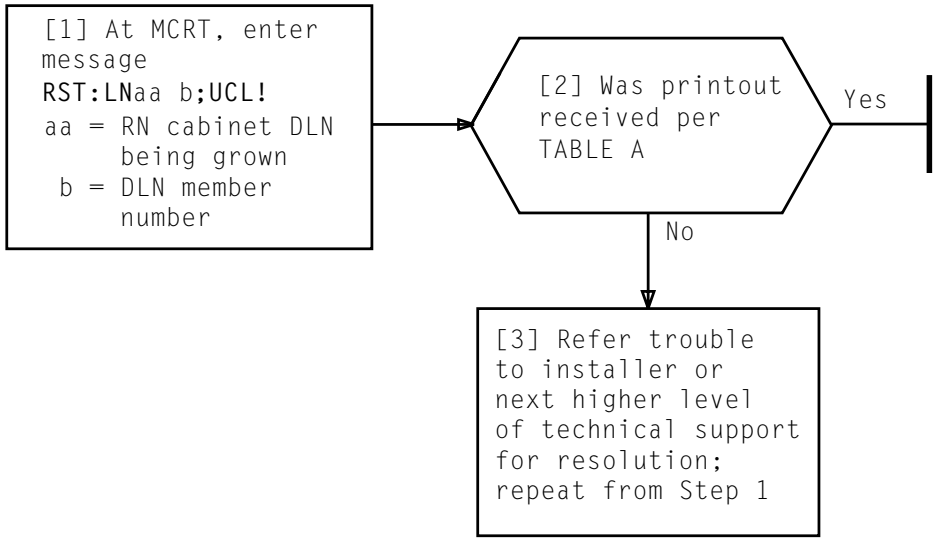

TABLE A

MESSAGE NUMBER	OUTPUT MESSAGE
1	RST LNaa b TASK n MESSAGE STARTED RING RST LNaa b COMPLETED REPT DLNCM LNaa-b ON-LINE (X'nnnnnnnn) REPT DLNCM PROC (Pump) LNaa-b PUMP STARTED REPT DLNCM PROC (Pump) LNaa-b nnnn (nnn) BINKS PUMPED IN nnnn MSEC REPT DLNCM PROC (Pumpapp) LNaa-b pump STARTED X'nnnnnnnn REPT DLNCM PROC (Pumpapp) LNaa-b DBTOC PUMPED nnnn BYTES MSEC nnn REPT DLNCM PROC (Pumpapp) LNaa-b PCPGTT PUMPED nnnn BYTES MSEC nnn REPT DLNCM PROC (Pumpapp) LNaa-b INGTT PUMPED nnnn BYTES MSEC nnn REPT DLNCM PROC (Pumpapp) LNaa-b MISCGTT PUMPED nnnn BYTES MSEC nnn REPT DLNCM PROC (Pumpapp) LNaa-b pump COMPL nnnn BYTES MSEC nnn

RESTORE GROWTH DLN UNCONDITIONALLY

Node-Specific Variable Record—Frames 00 & 32											
Node	**HV**	**MV**	**Pack Code**	**Issue**	**Pathname**	**Node**	**HV**	**MV**	**Pack Code**	**Issue**	**Pathname**
RPCN00 0		Blank *	RPC	N/A	pu/rpc	RPCN32 0		Blank *	RPC	N/A	pu/rpc
LN00 1						LN32 1					
LN00 2						LN32 2					
LN00 3						LN32 3					
LN00 4						LN32 4					
RPCD00 5	0x2009000	0x23	N/A	1	pu/DLNI_NA	RPCD32 5	0x2009000	0x23	N/A	1	pu/DLNI_NA
LN00 5	0x2009000	0x23	DLNE	1	pu/iun	LN32 5	0x2009000	0x23	DLNE	1	pu/iun
LN00 6						LN32 6					
LN00 7						LN32 7					
LN00 8						LN32 8					
LN00 9						LN32 9					
RPCD00 10	0x2009000	0x23	N/A	1	pu/DLNI_NA	RPCD32 10	0x2009000	0x23	N/A	1	pu/DLNI_NA
LN00 10	0x2009000	0x23	DLNE	1	pu/iun	LN32 10	0x2009000	0x23	DLNE	1	pu/iun
LN00 11						LN32 11					
LN00 12						LN32 12					
LN00 13						LN32 13					
LN00 14						LN32 14					
* Blank field is obtained by entering an apostrophe											

RECORD NODE DATA RESULTS

Node-Specific Variable Record—Frames 06											
Node	HV	MV	Pack Code	Issue	Pathname	Node	HV	MV	Pack Code	Issue	Pathname
LN06 2						LN09 1					
LN06 3						LN09 2					
LN06 4						LN09 3					
LN06 5						LN09 4					
LN06 6						LN09 5					
LN06 7											
LN06 8											
LN07 1											
LN07 2						LN10 1					
LN07 3						LN10 2					
						LN10 3					
LN07 5						LN10 4					
LN07 6						LN10 5					
LN07 7						LN10 6					
LN07 8						LN10 7					
LN08 1						LN10 8					
LN08 2						LN11 1					
LN08 3						LN11 2					
LN08 4						LN11 3					
LN08 5						LN11 4					
LN08 6						LN11 5					
LN08 7						LN11 6					
LN08 8						LN11 7					
* Blank field is obtained by entering an apostrophe											

Node-Specific Variable Record—Frames 38											
Node	HV	MV	Pack Code	Issue	Pathname	Node	HV	MV	Pack Code	Issue	Pathname
						LN41 1					
LN38 2						LN41 2					
LN38 3						LN41 3					
LN38 4						LN41 4					
LN38 5						LN41 5					
LN38 6											
LN38 7											
LN38 8											
LN39 1						LN42 1					
LN39 2						LN42 2					
LN39 3						LN42 3					
						LN42 4					
LN39 5						LN42 5					
LN39 6						LN42 6					
LN39 7						LN42 7					
LN39 8						LN42 8					
LN40 1						LN43 1					
LN40 2						LN43 2					
LN40 3						LN43 3					
LN40 4						LN43 4					
LN40 5						LN43 5					
LN40 6						LN43 6					
LN40 7						LN43 7					
LN40 8											
* Blank field is obtained by entering an apostrophe											

Node-Specific Variable Record—Frames 28 & 60											
Node	HV	MV	Pack Code	Issue	Pathname	Node	HV	MV	Pack Code	Issue	Pathname
LN28 2						LN60 2					
LN28 3						LN60 3					
LN28 4						LN60 4					
LN28 5						LN60 5					
LN28 6						LN60 6					
LN28 7						LN60 7					
LN28 8						LN60 8					
LN28 9						LN60 9					
LN28 60						LN60 10					
LN28 11						LN60 11					
LN28 12						LN60 12					
LN28 13						LN60 13					
LN28 14						LN60 14					
* Blank field is obtained by entering an apostrophe											

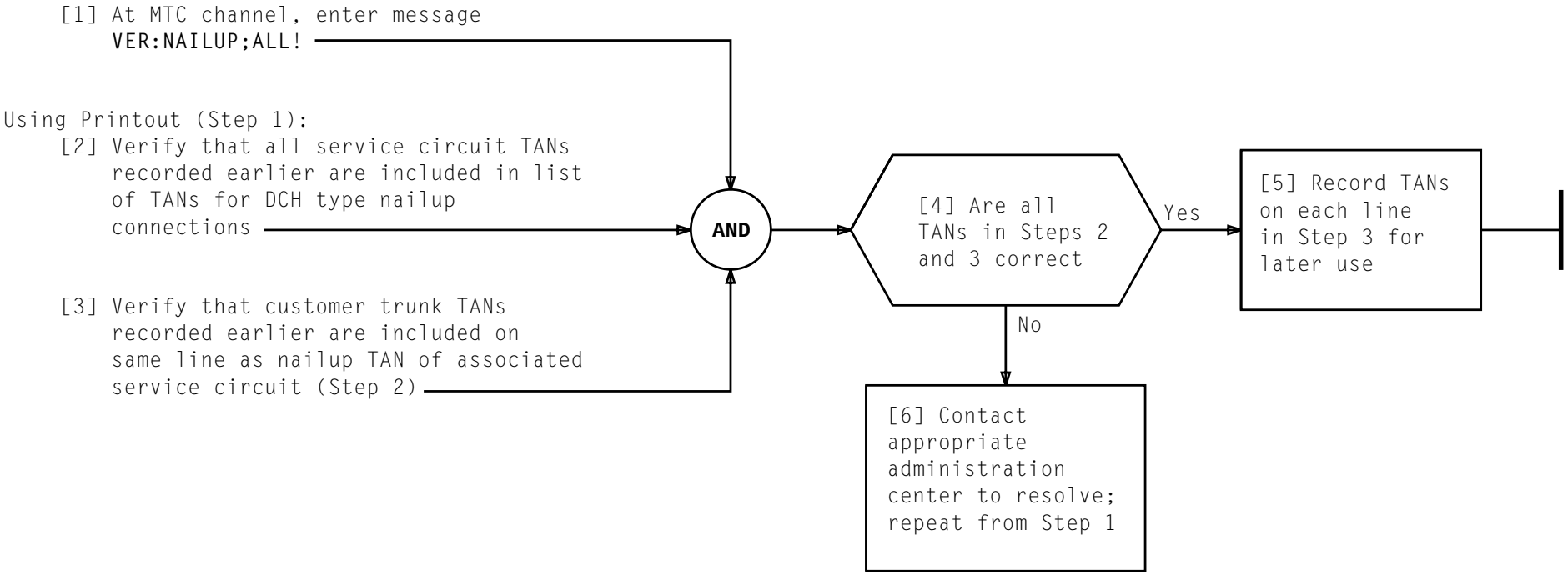

VERIFY NAILUP INFORMATION FOR DCHAN SIGNALING LINK

DEGROW SIGNALING LINK(S) TO UNEQ

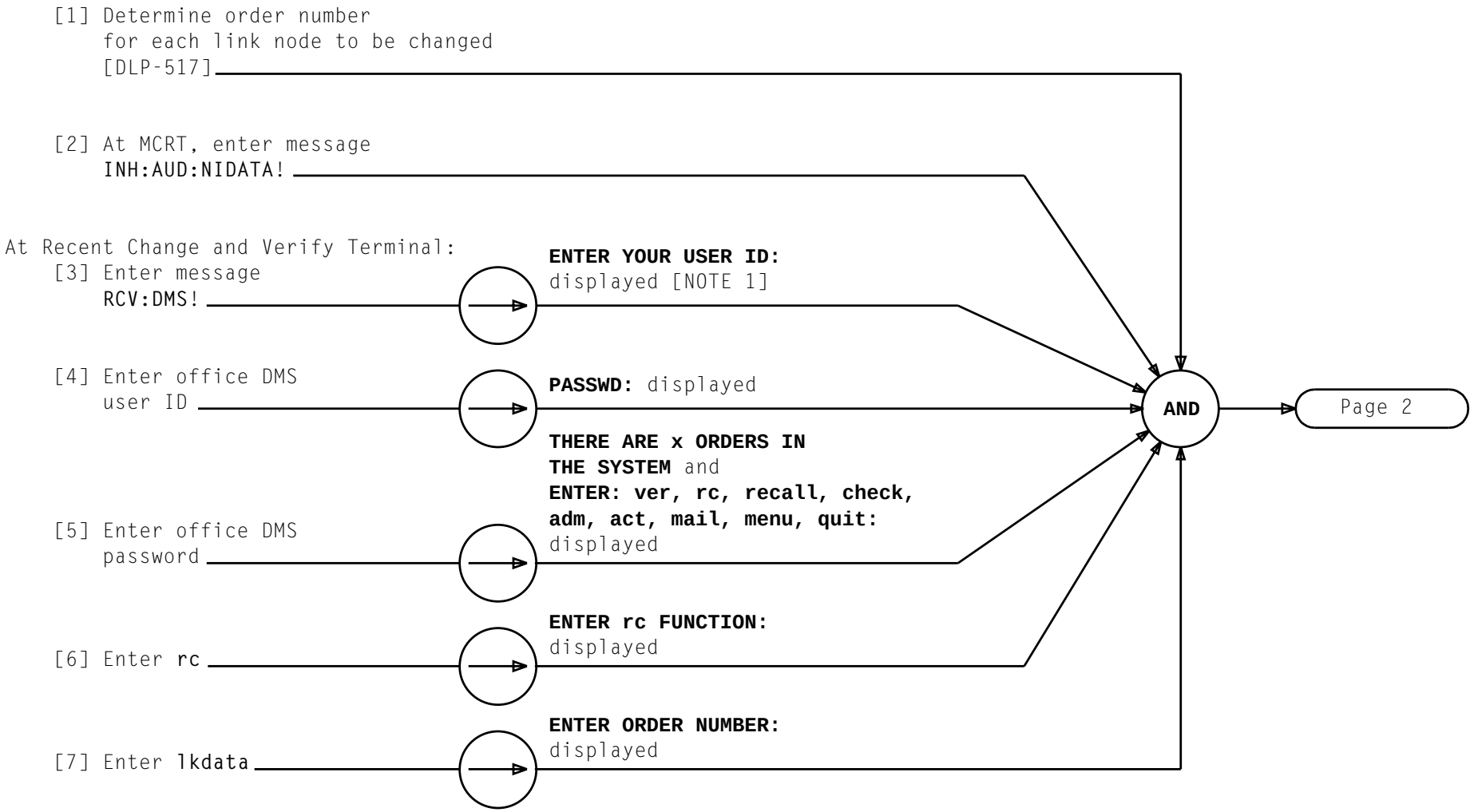

NOTE 1
If **ENTER YOUR USER ID:** is not received, **BREAK** key will have to be depressed

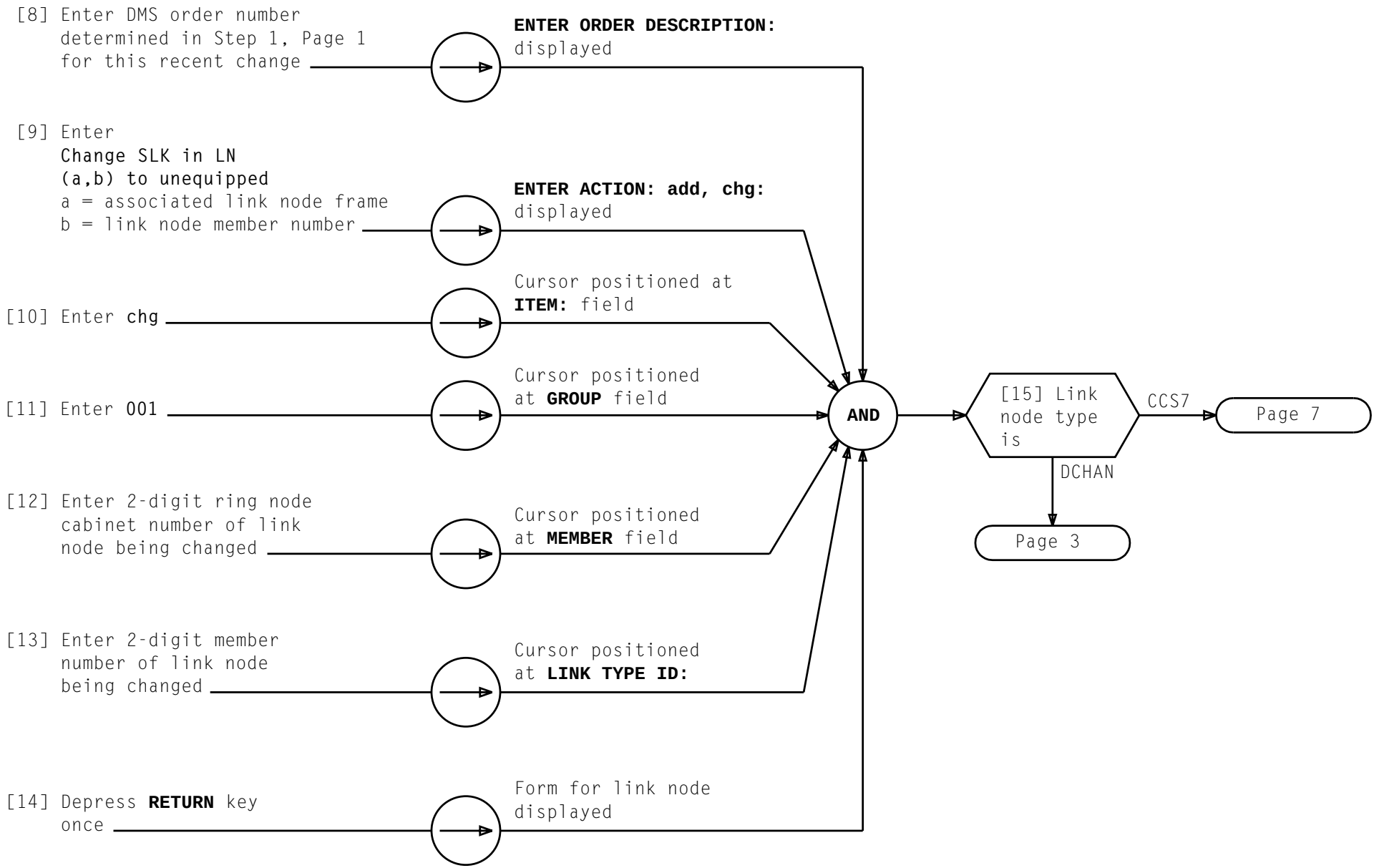

DEGROW SIGNALING LINK(S) TO UNEQ

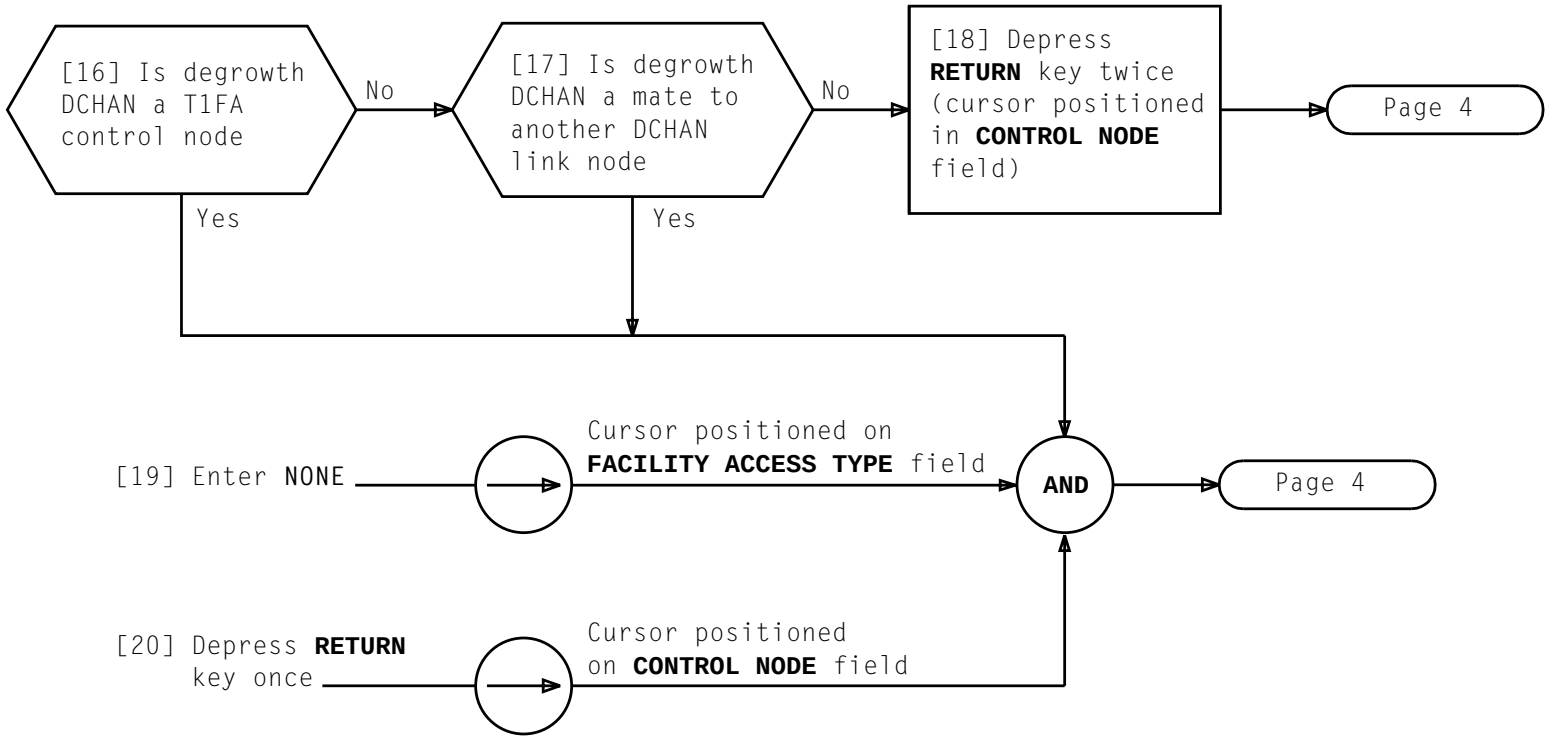

DEGROW SIGNALING LINK(S) TO UNEQ

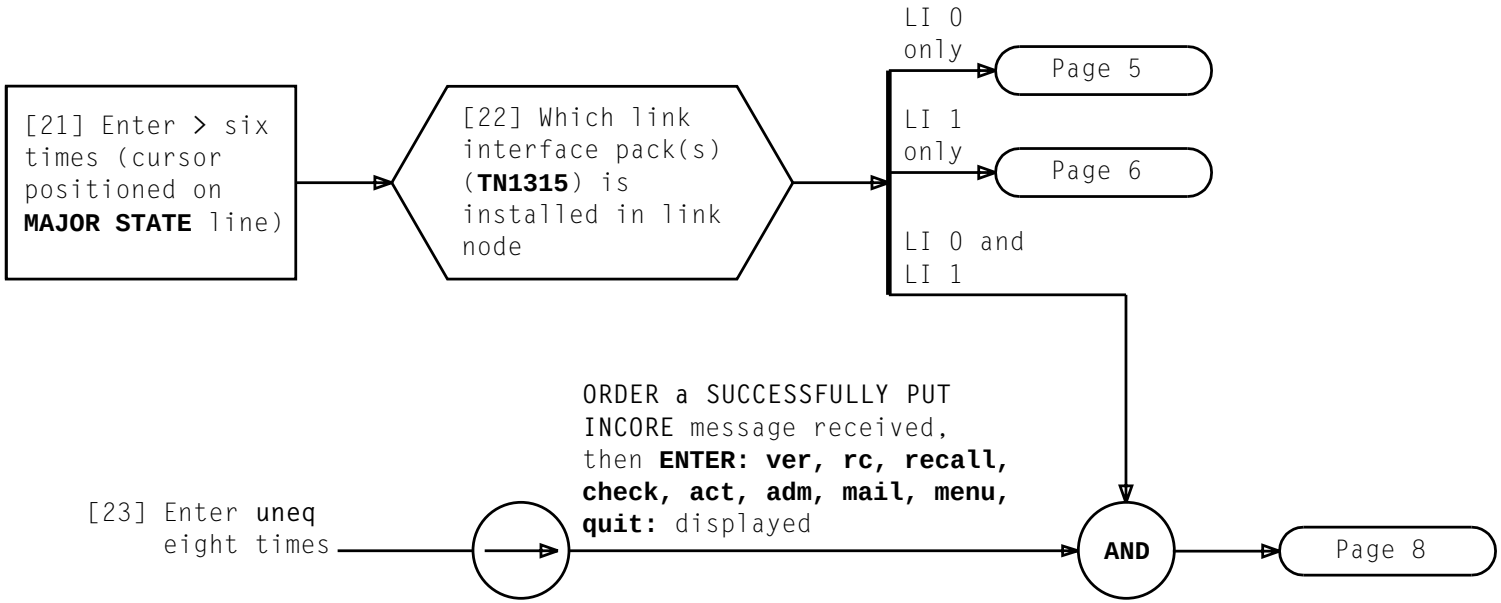

DEGROW SIGNALING LINK(S) TO UNEQ

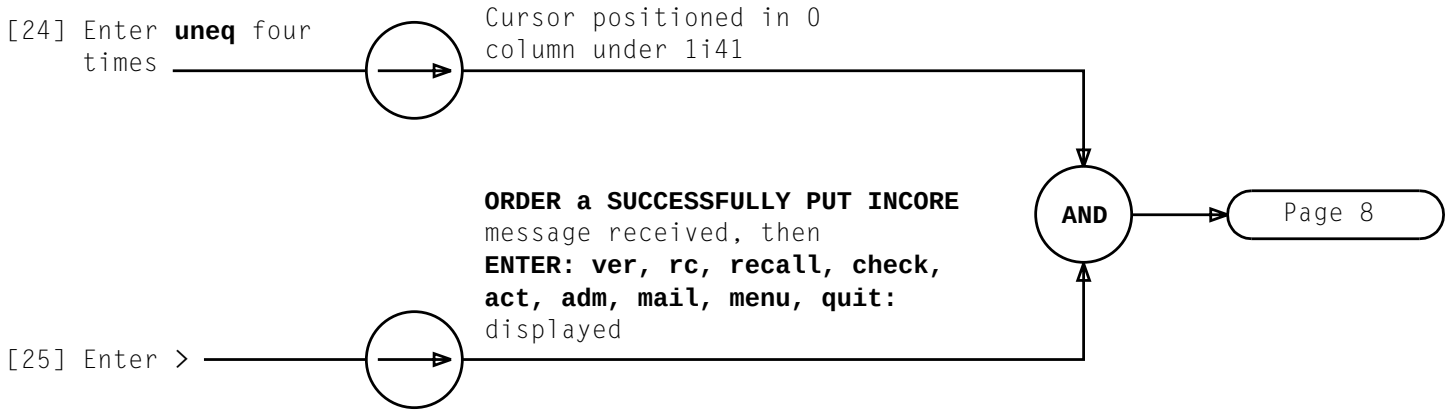

DEGROW SIGNALING LINK(S) TO UNEQ

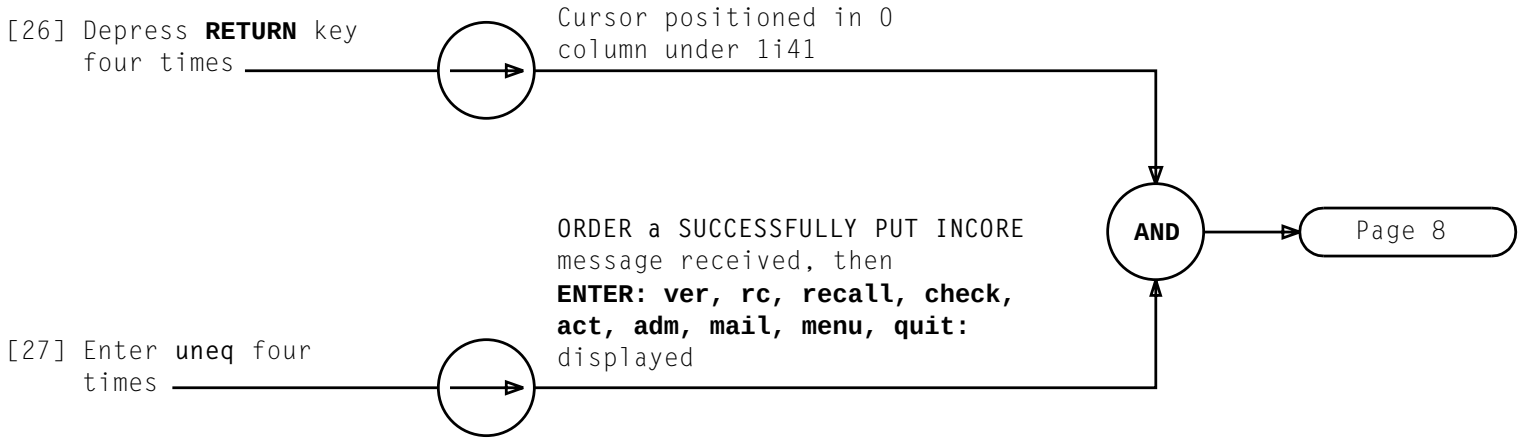

DEGROW SIGNALING LINK(S) TO UNEQ

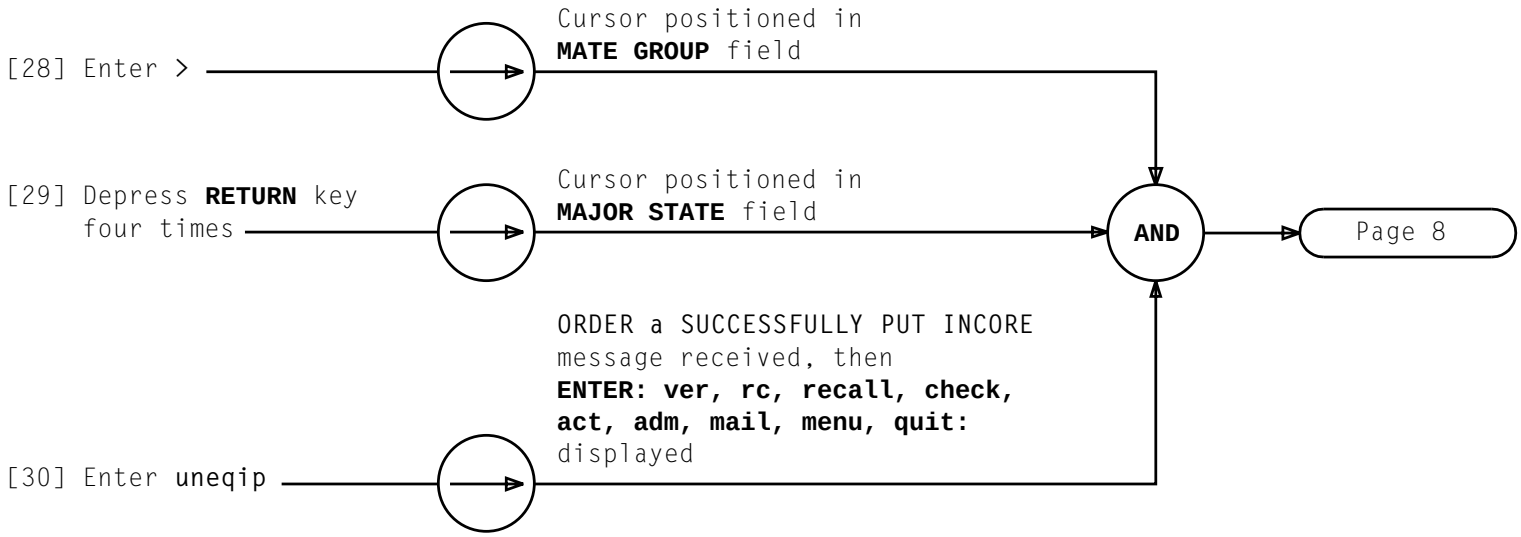

DEGROW SIGNALING LINK(S) TO UNEQ

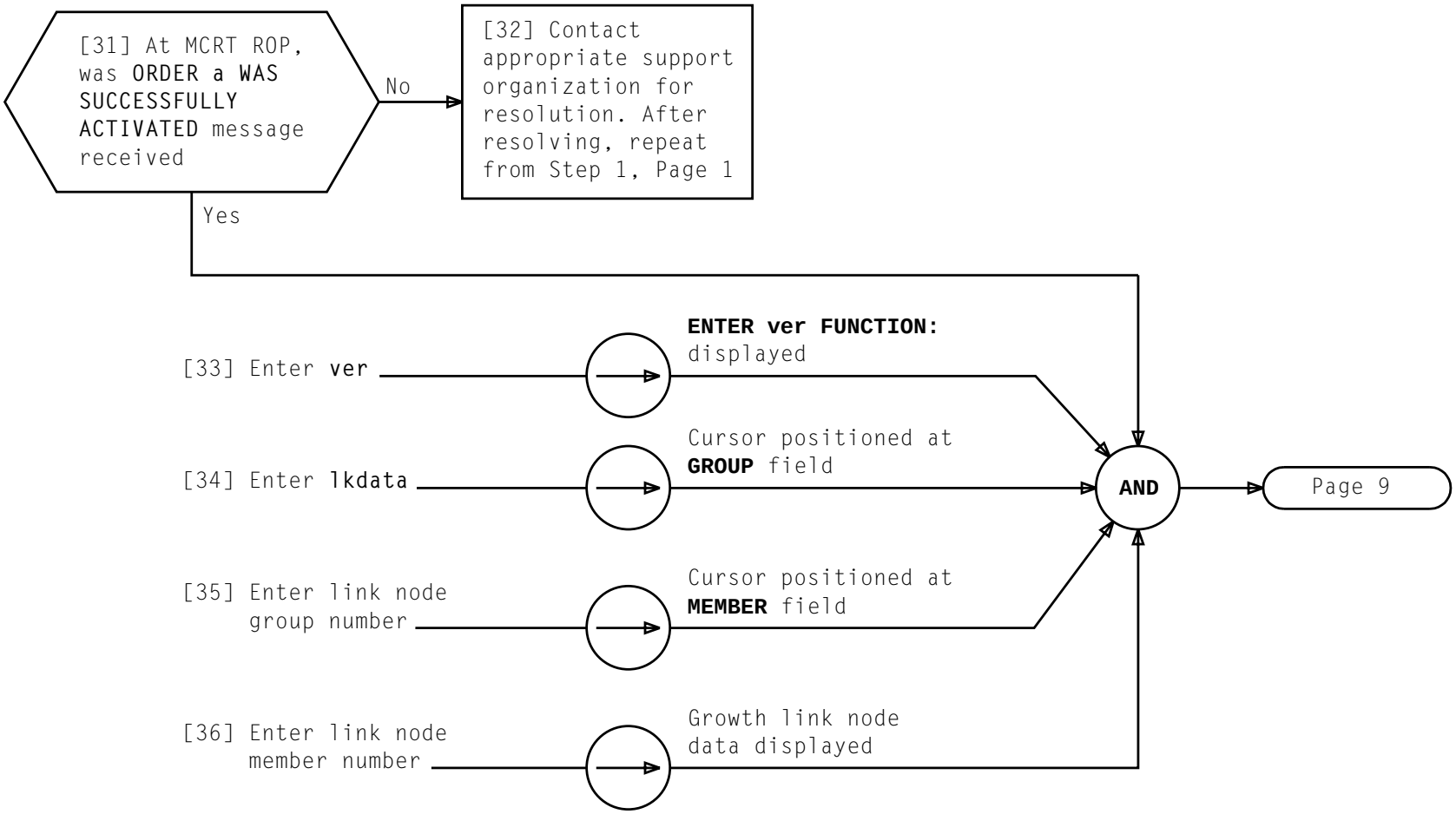

DEGROW SIGNALING LINK(S) TO UNEQ

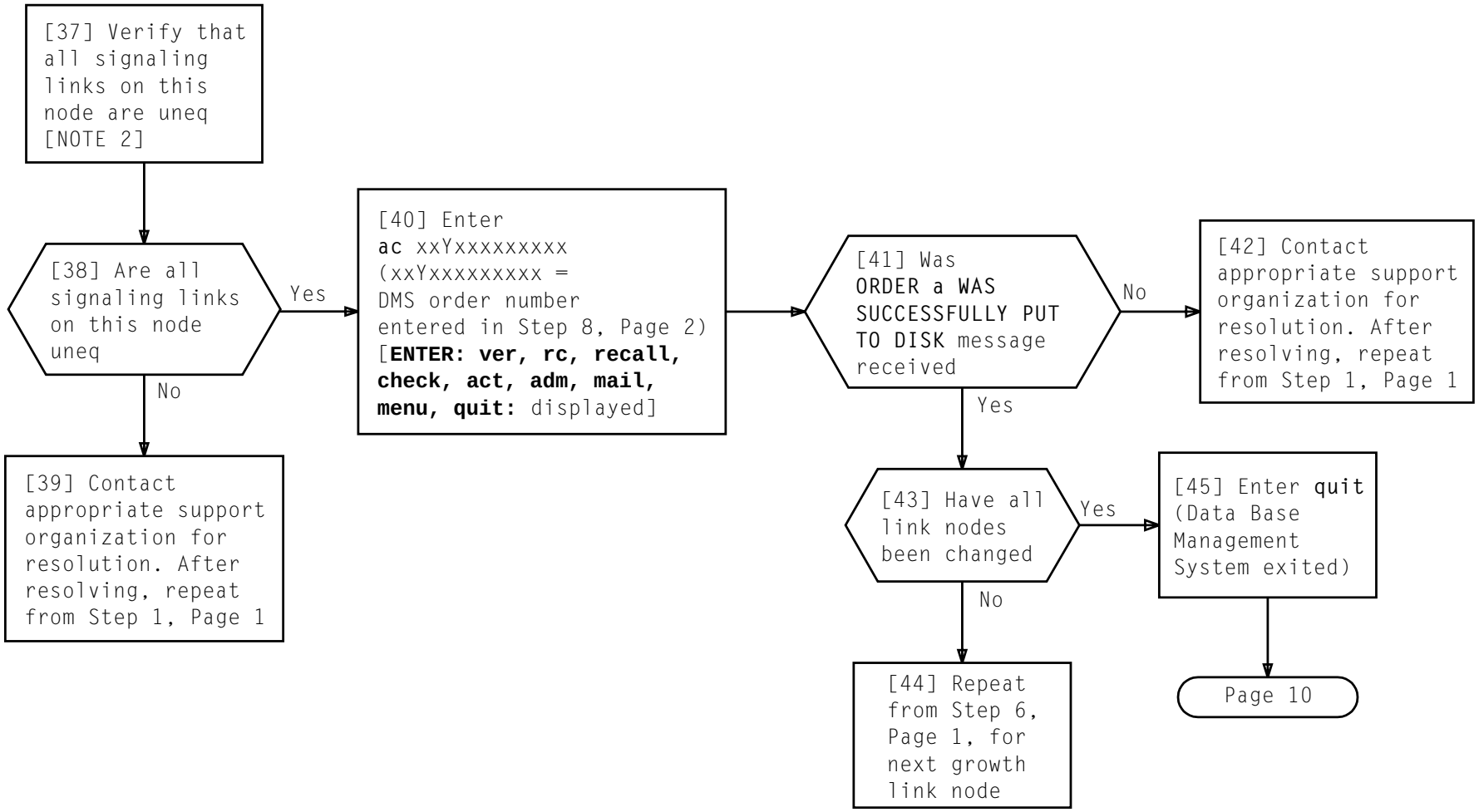

NOTE 2
Any **LINK SPEED** that was populated will be set to 0 when signaling link is set to uneq

DEGROW SIGNALING LINK(S) TO UNEQ

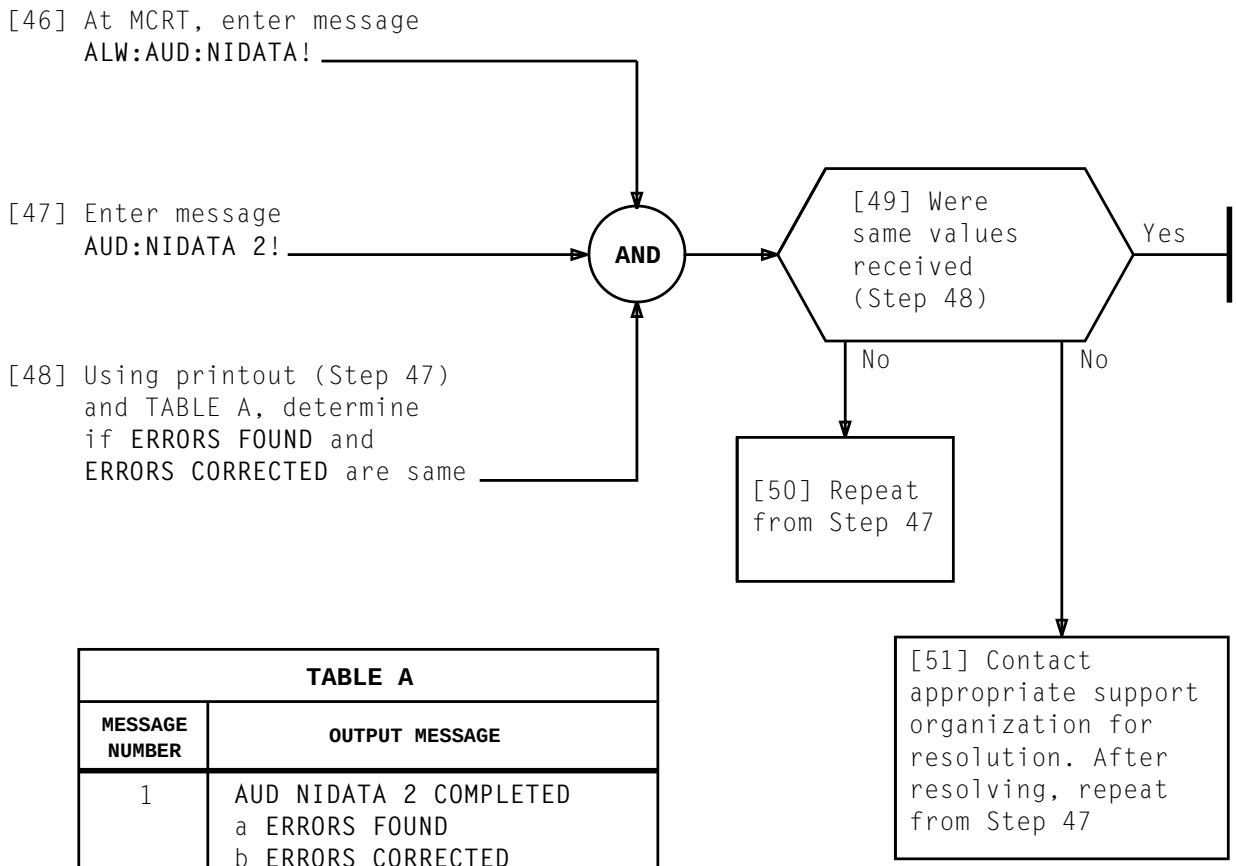

TABLE A

MESSAGE NUMBER	OUTPUT MESSAGE
1	AUD NIDATA 2 COMPLETED a ERRORS FOUND b ERRORS CORRECTED

a = Total number of errors found
b = Total number of errors corrected

DEGROW SIGNALING LINK(S) TO UNEQ

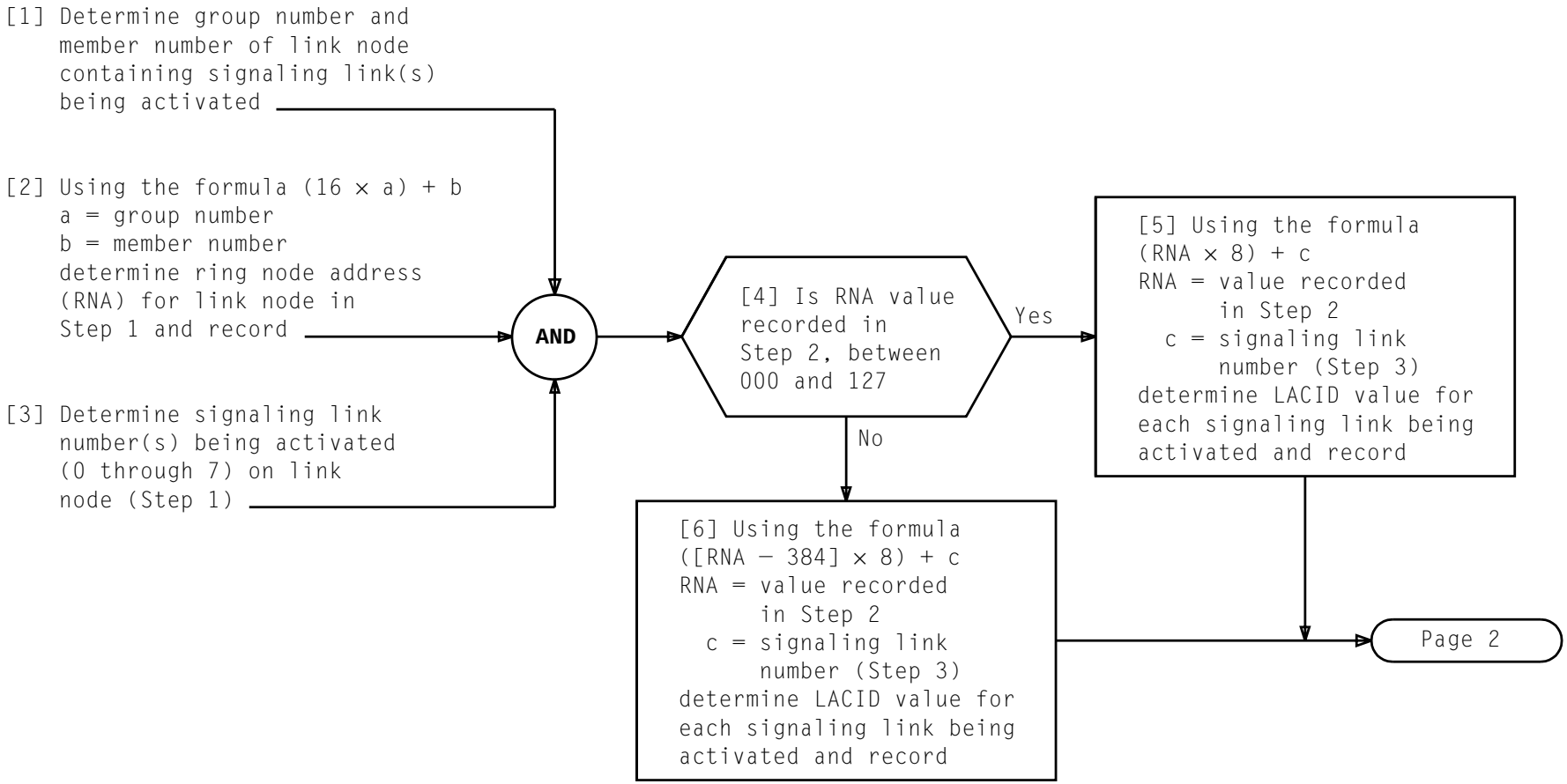

CHANGE GROWTH SIGNALING LINK(S) TO UNAVAILABLE

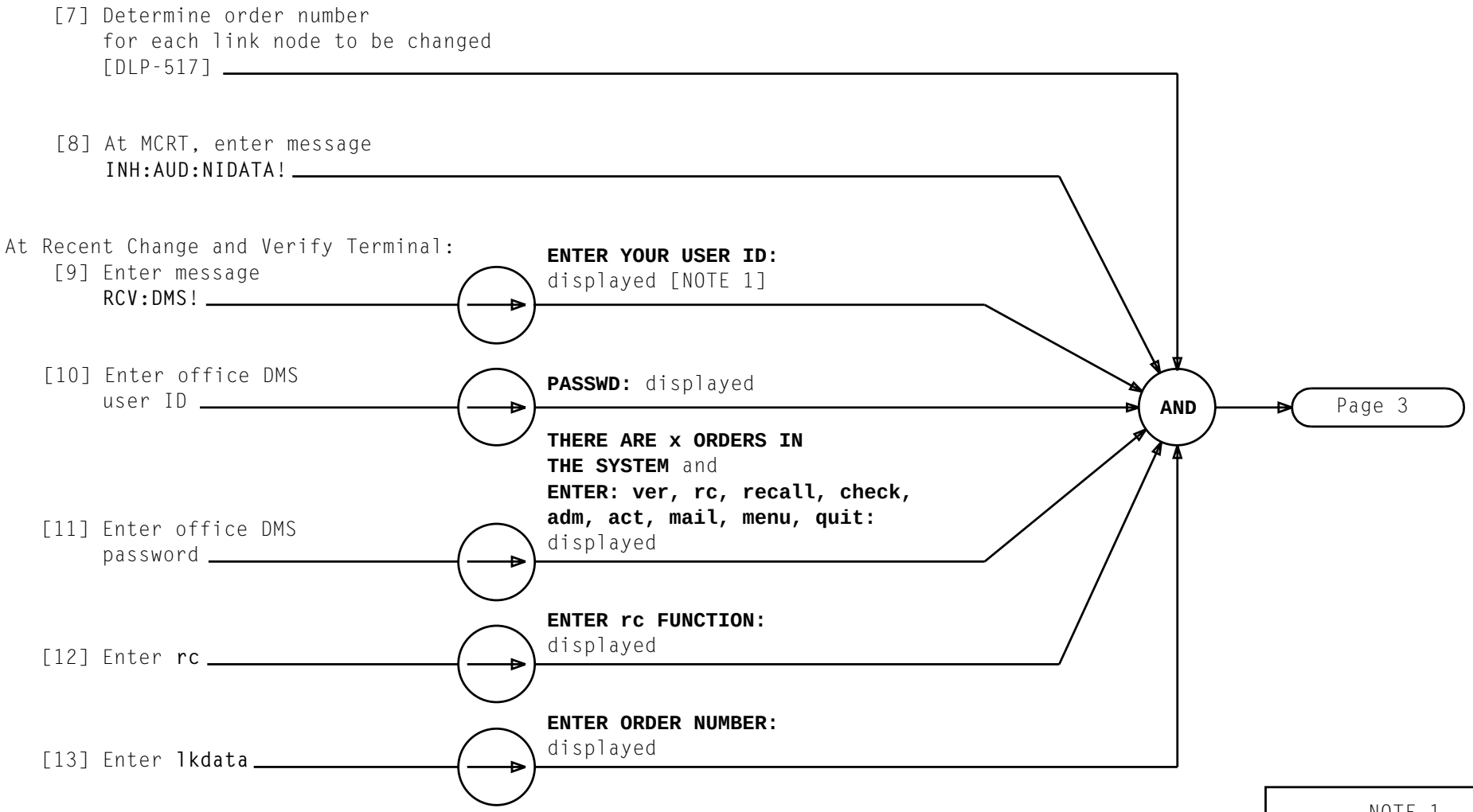

NOTE 1
If **ENTER YOUR USER ID:** is not received, **BREAK** key will have to be depressed

CHANGE GROWTH SIGNALING LINK(S) TO UNAVAILABLE

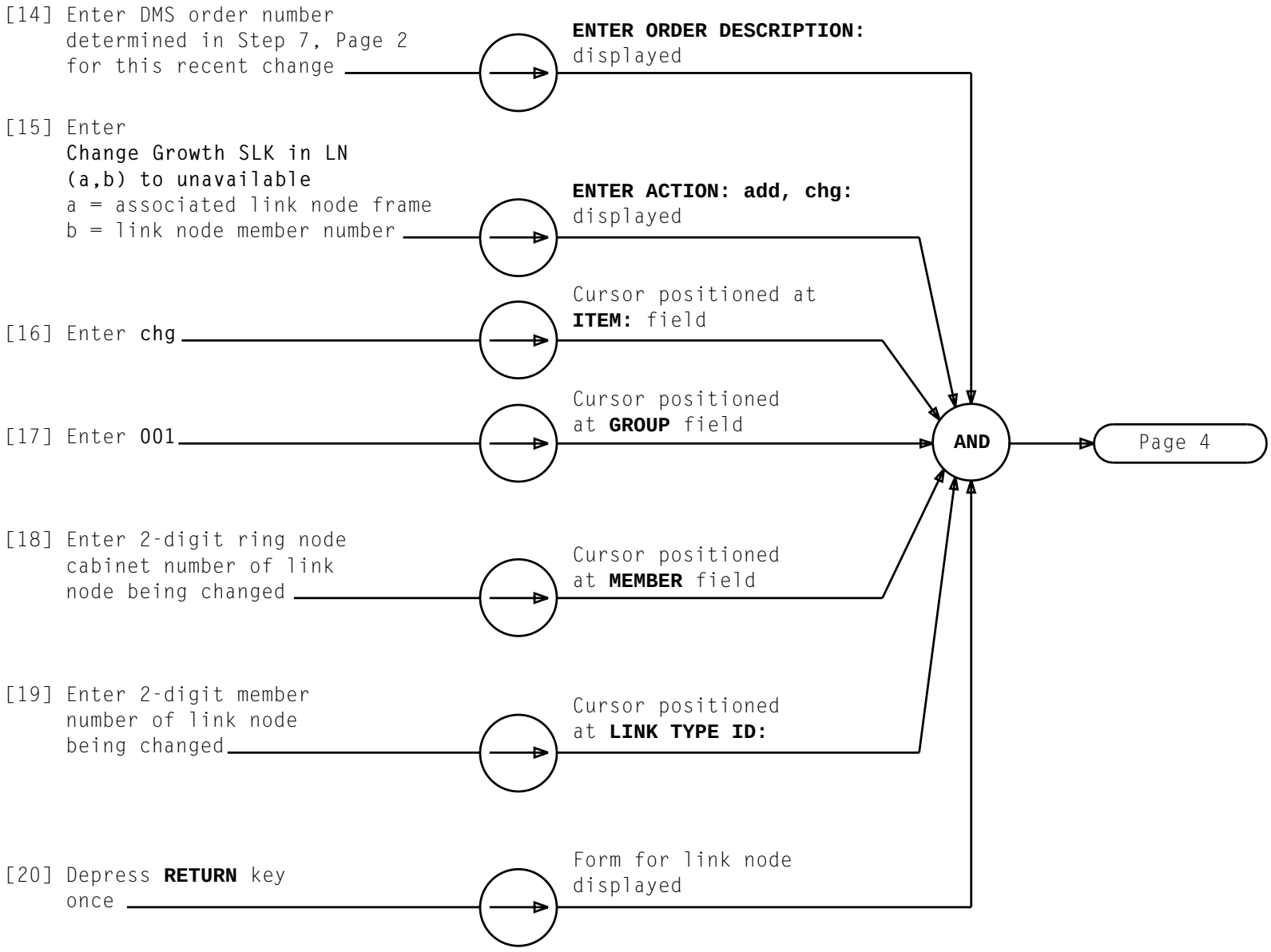

CHANGE GROWTH SIGNALING LINK(S) TO UNAVAILABLE

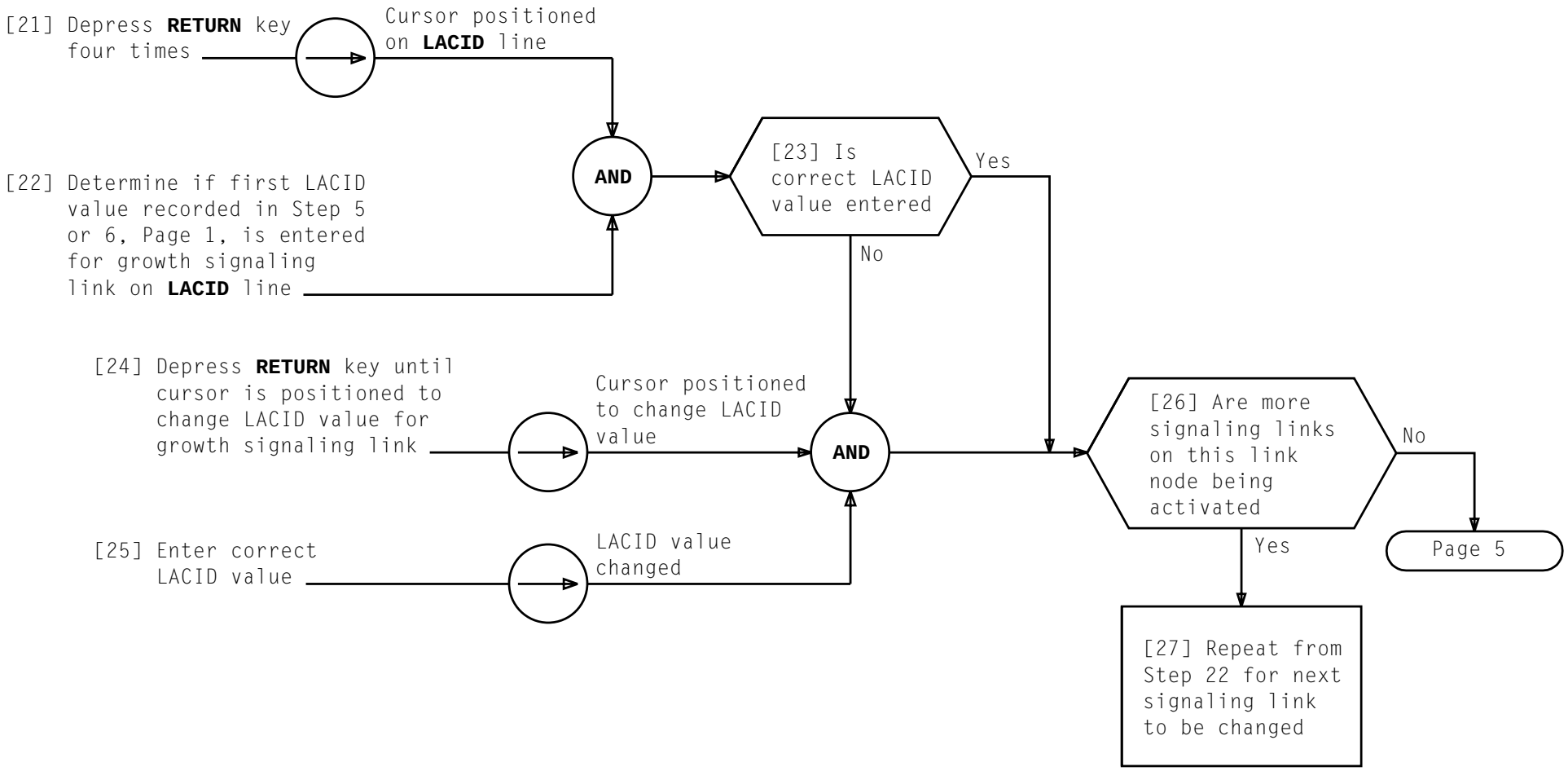

CHANGE GROWTH SIGNALING LINK(S) TO UNAVAILABLE

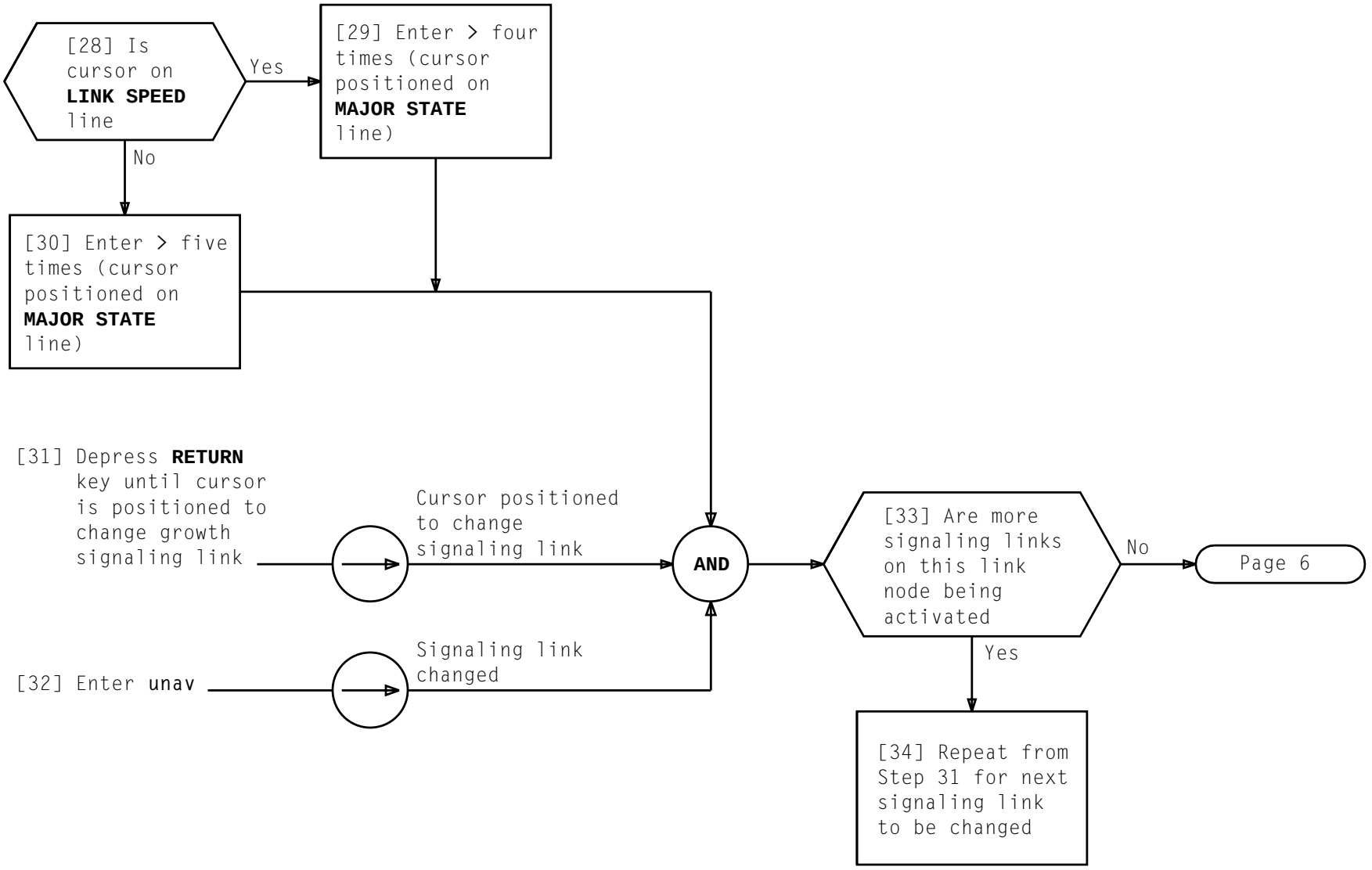

CHANGE GROWTH SIGNALING LINK(S) TO UNAVAILABLE

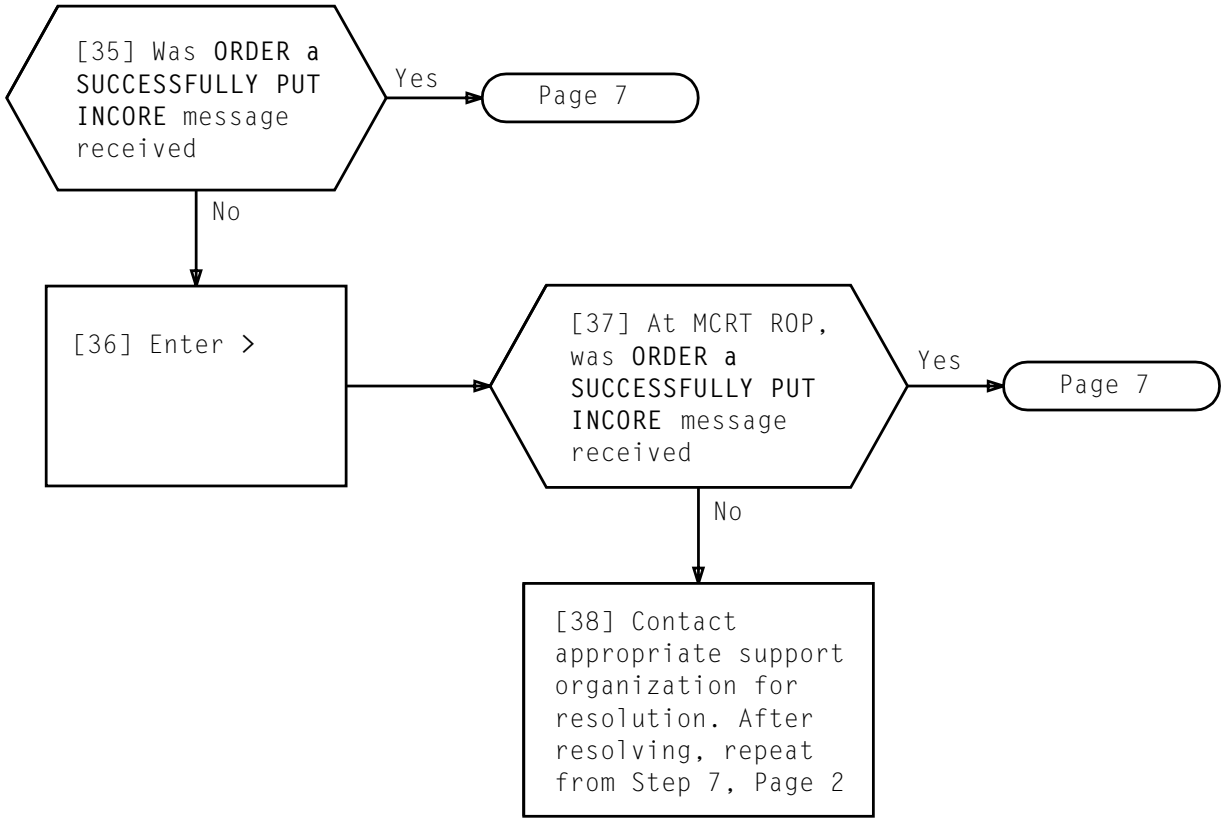

CHANGE GROWTH SIGNALING LINK(S) TO UNAVAILABLE

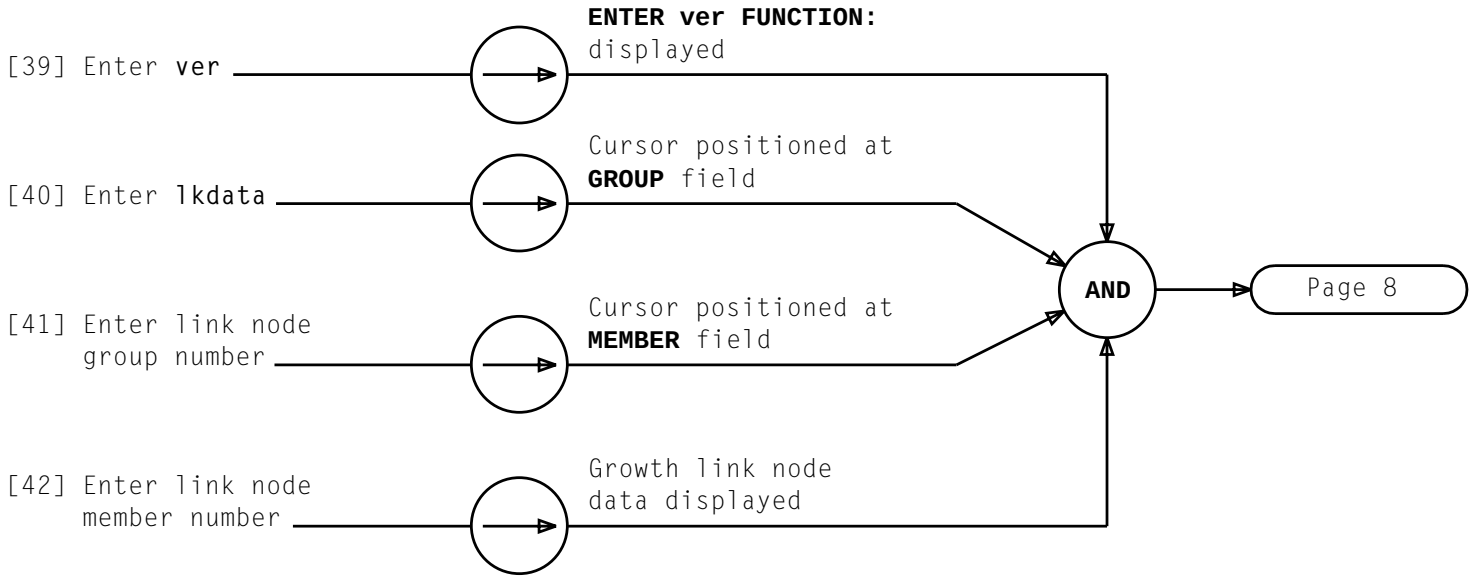

CHANGE GROWTH SIGNALING LINK(S) TO UNAVAILABLE

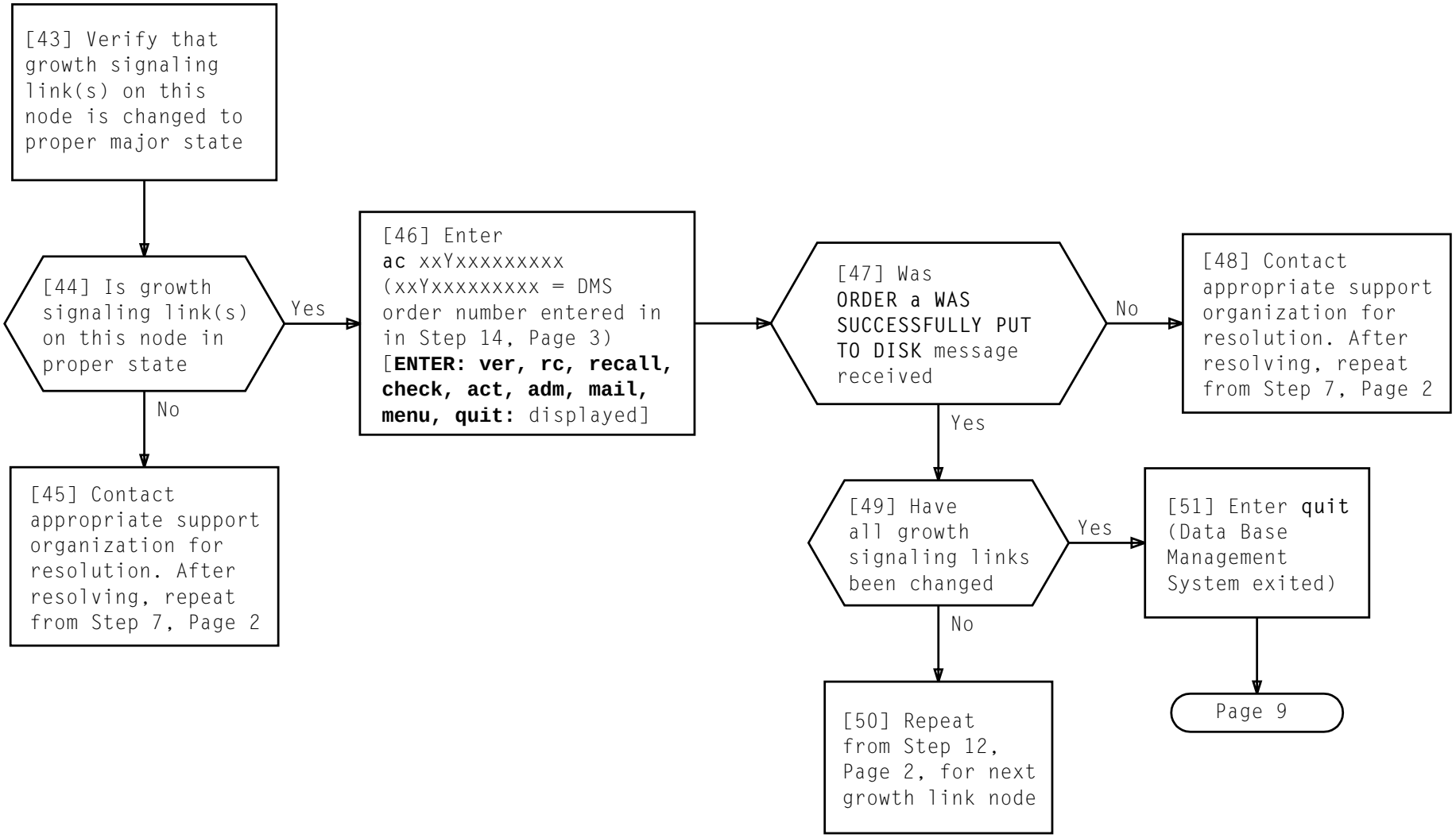

CHANGE GROWTH SIGNALING LINK(S) TO UNAVAILABLE

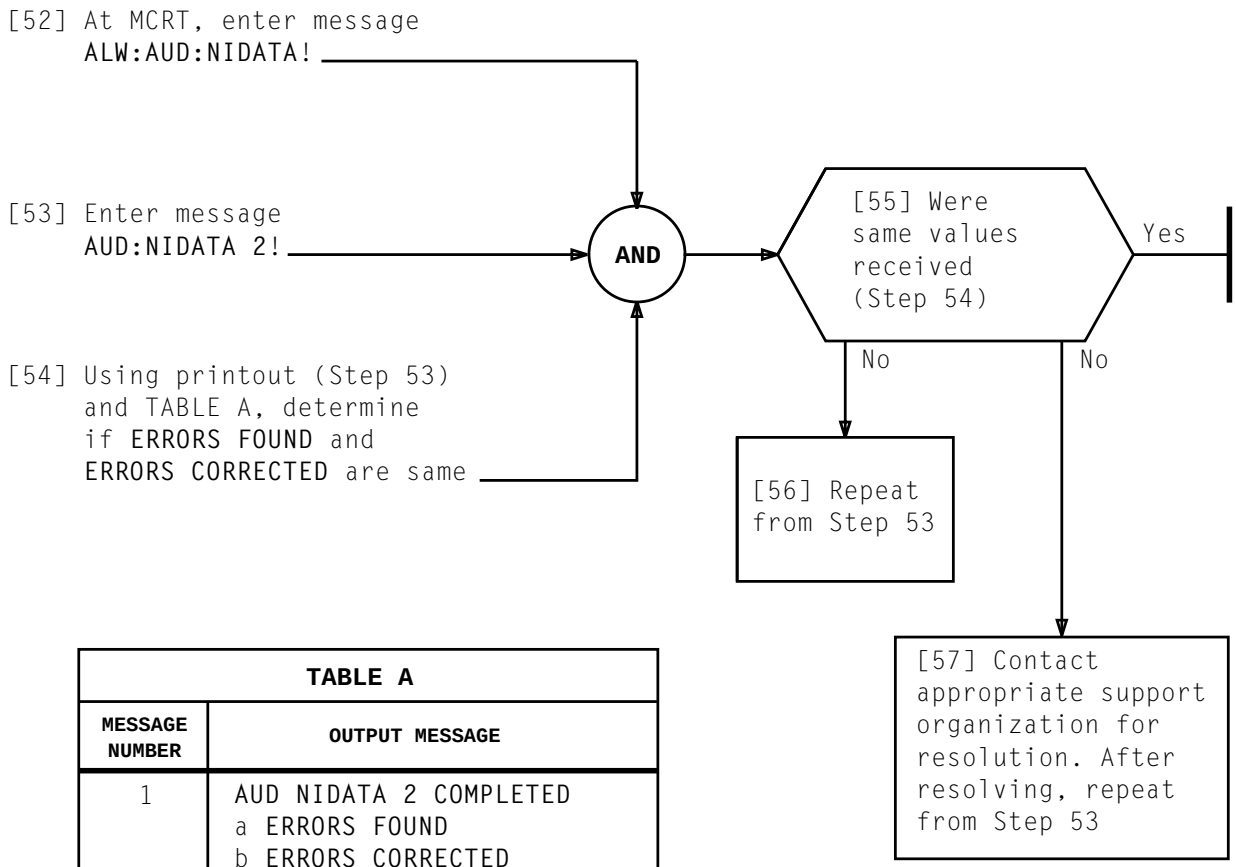

TABLE A

MESSAGE NUMBER	OUTPUT MESSAGE
1	AUD NIDATA 2 COMPLETED a ERRORS FOUND b ERRORS CORRECTED

a = Total number of errors found
b = Total number of errors corrected

CHANGE GROWTH SIGNALING LINK(S) TO UNAVAILABLE

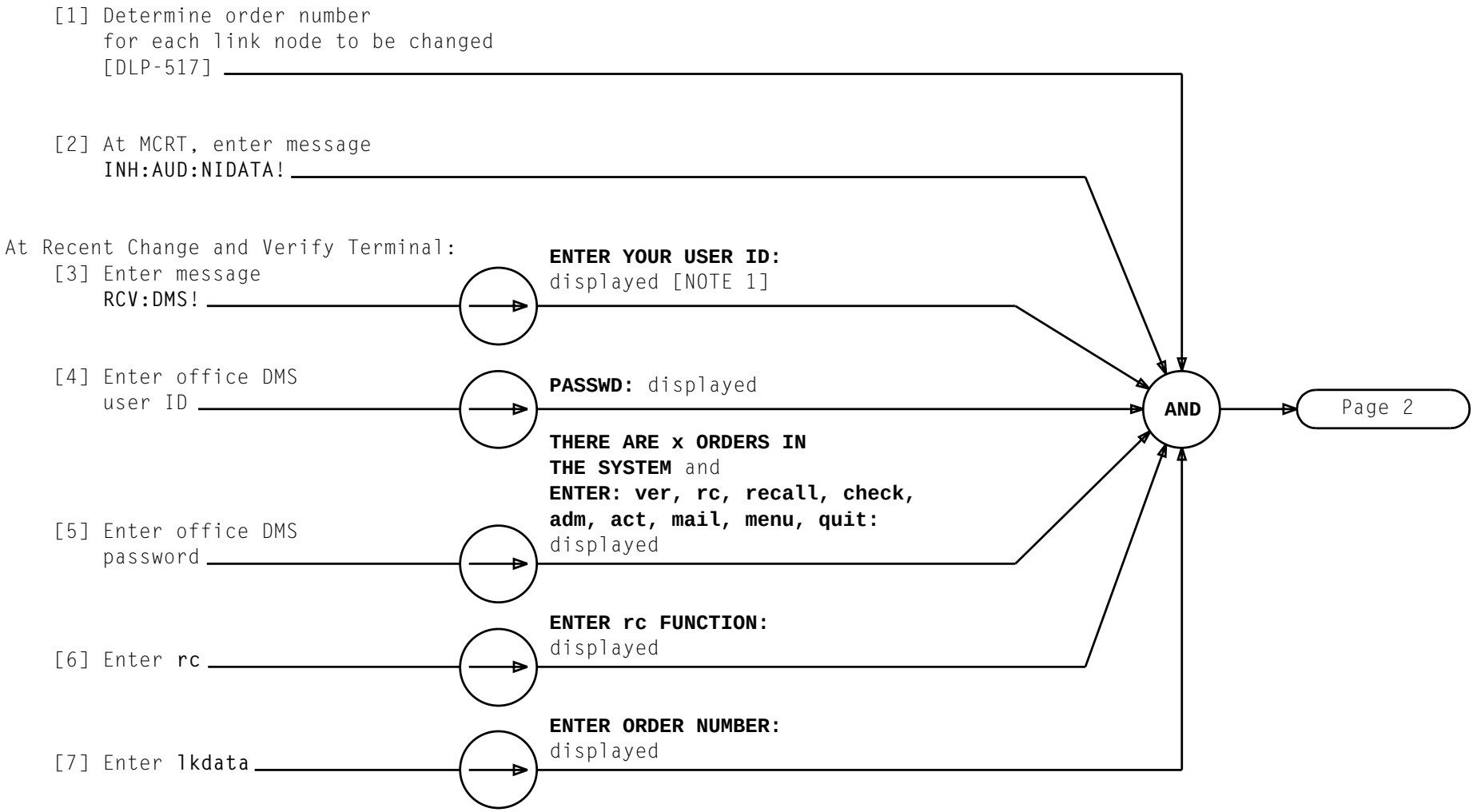

NOTE 1
If **ENTER YOUR USER ID:** is not received, **BREAK** key will have to be depressed

CHANGE SIGNALING LINK(S) TO UNAV

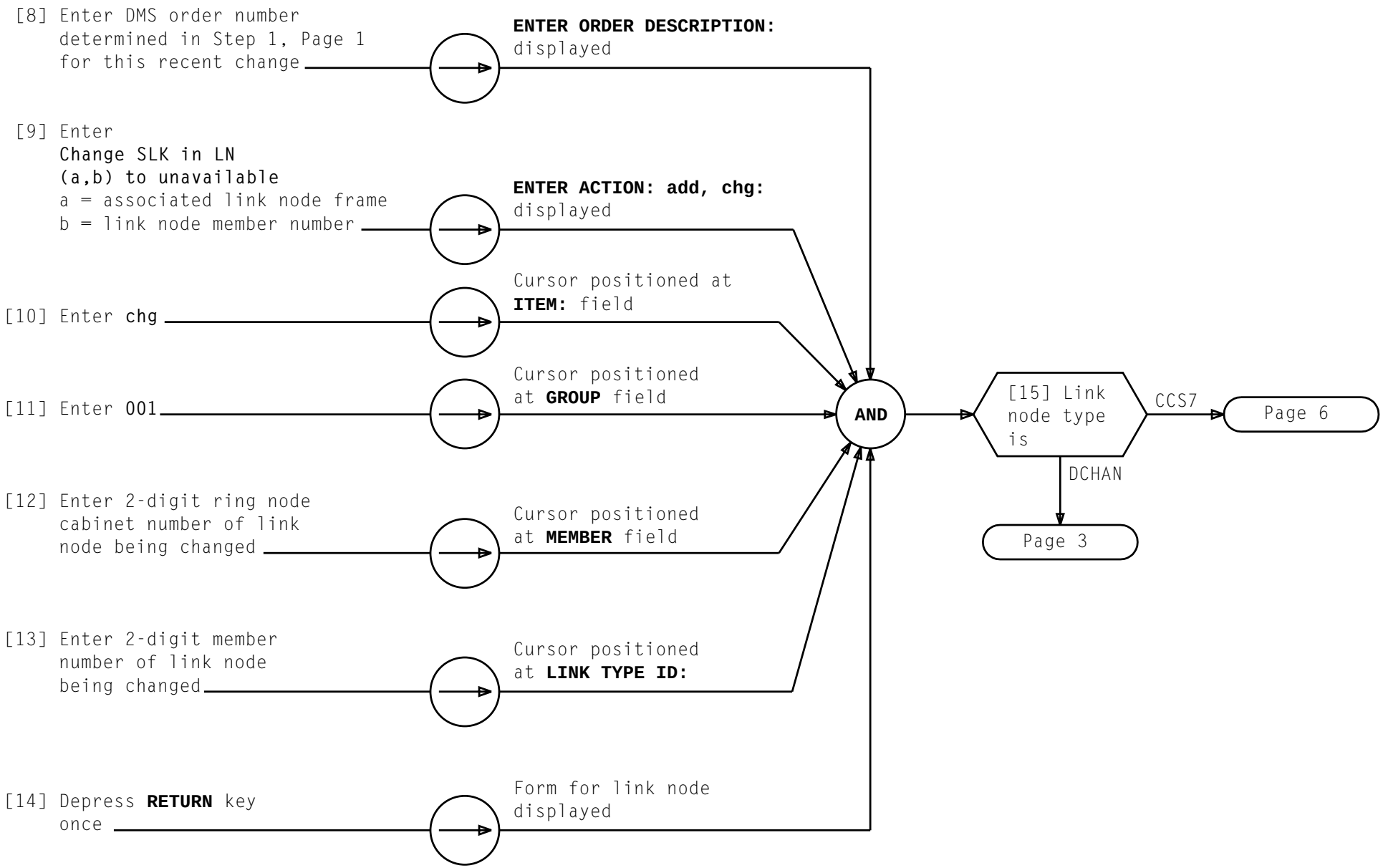

CHANGE SIGNALING LINK(S) TO UNAV

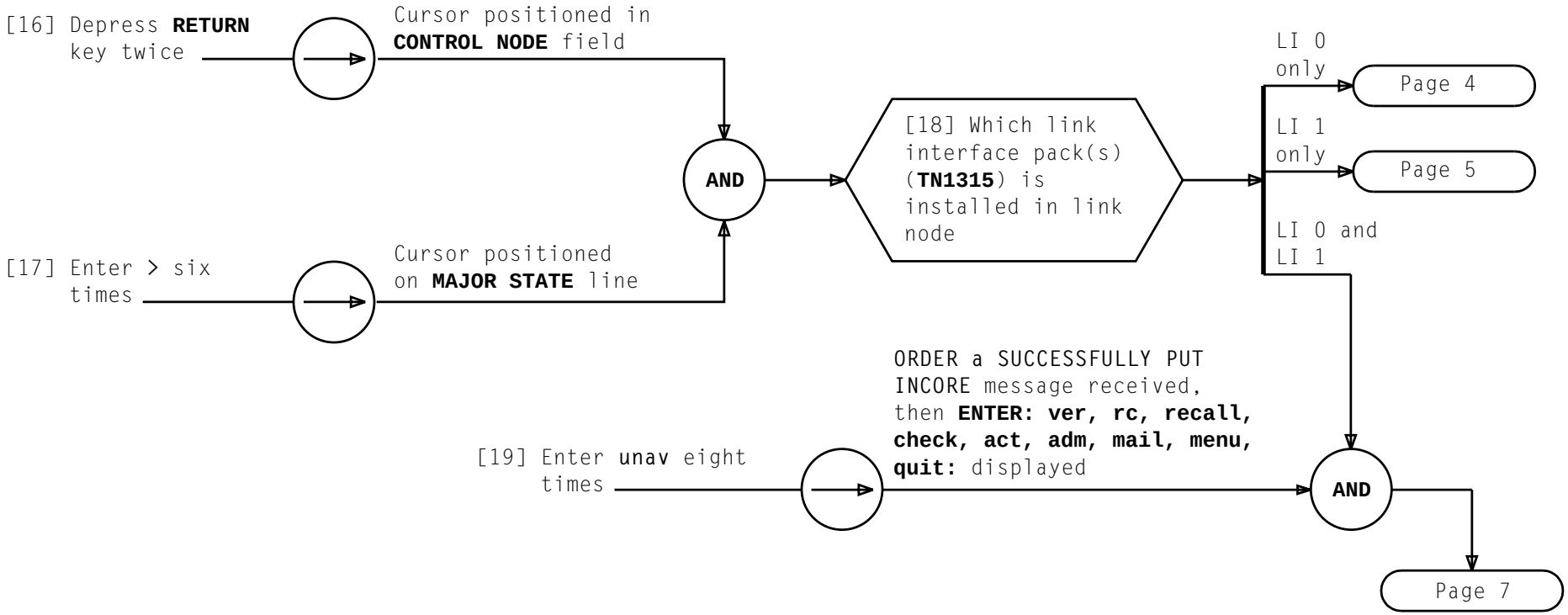

CHANGE SIGNALING LINK(S) TO UNAV

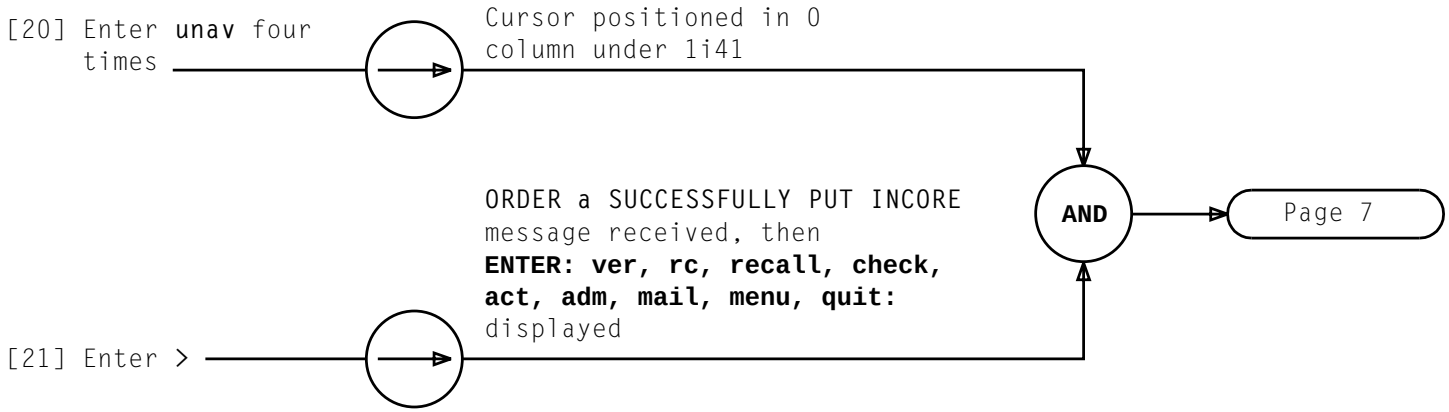

CHANGE SIGNALING LINK(S) TO UNAV

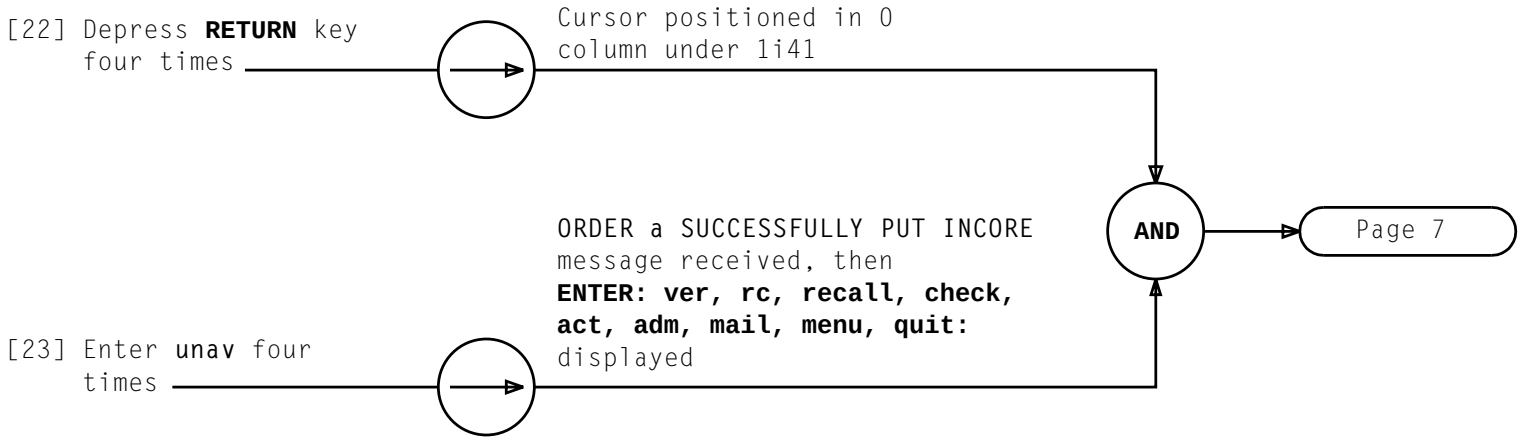

CHANGE SIGNALING LINK(S) TO UNAV

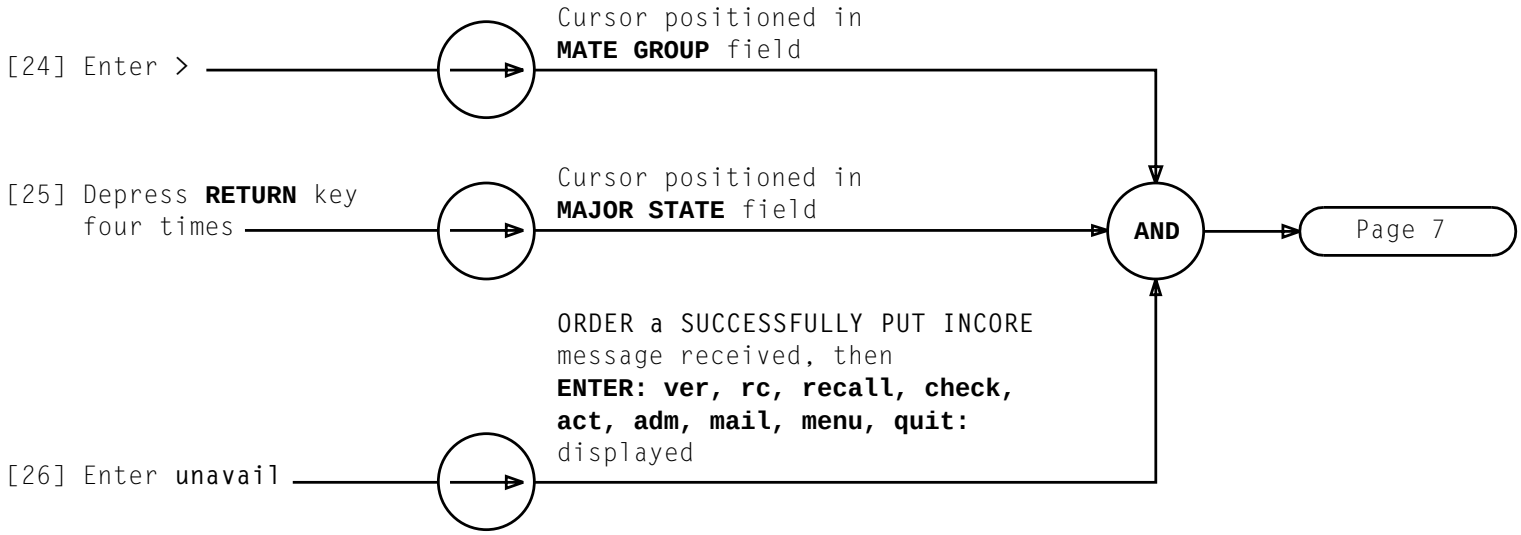

CHANGE SIGNALING LINK(S) TO UNAV

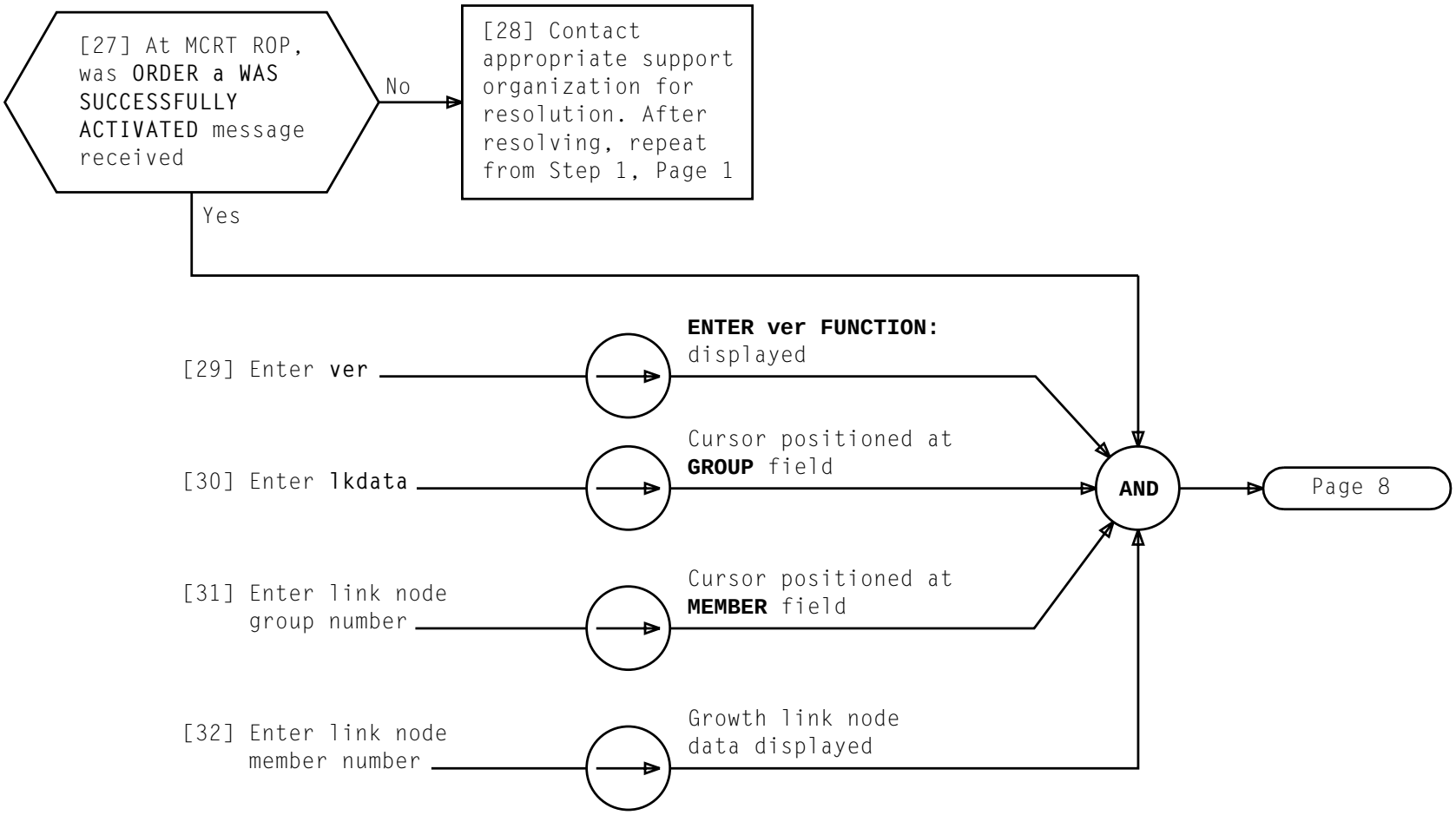

CHANGE SIGNALING LINK(S) TO UNAV

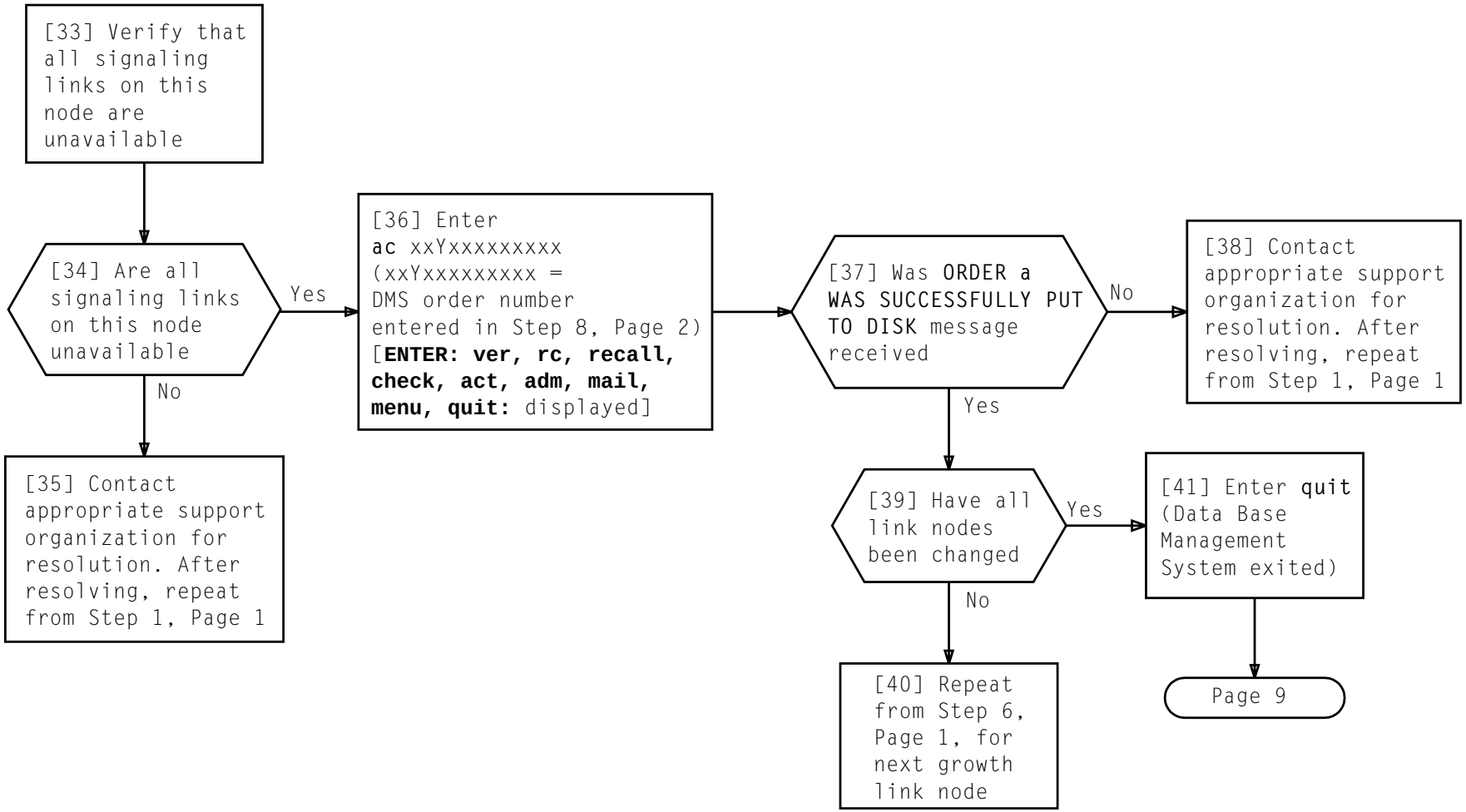

CHANGE SIGNALING LINK(S) TO UNAV

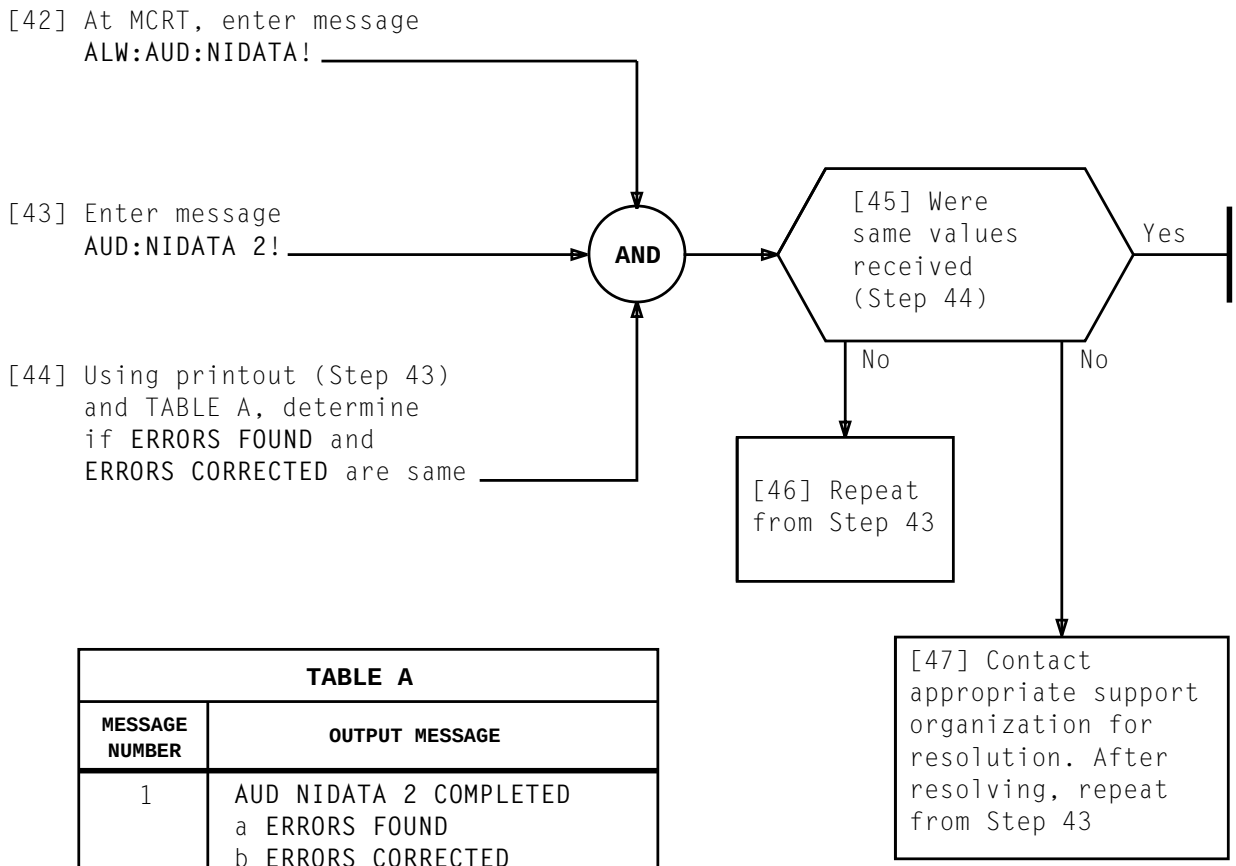

TABLE A

MESSAGE NUMBER	OUTPUT MESSAGE
1	AUD NIDATA 2 COMPLETED a ERRORS FOUND b ERRORS CORRECTED

a = Total number of errors found
b = Total number of errors corrected

CHANGE SIGNALING LINK(S) TO UNAV

CHANGE SIGNALING LINK(S) TO UNEQ

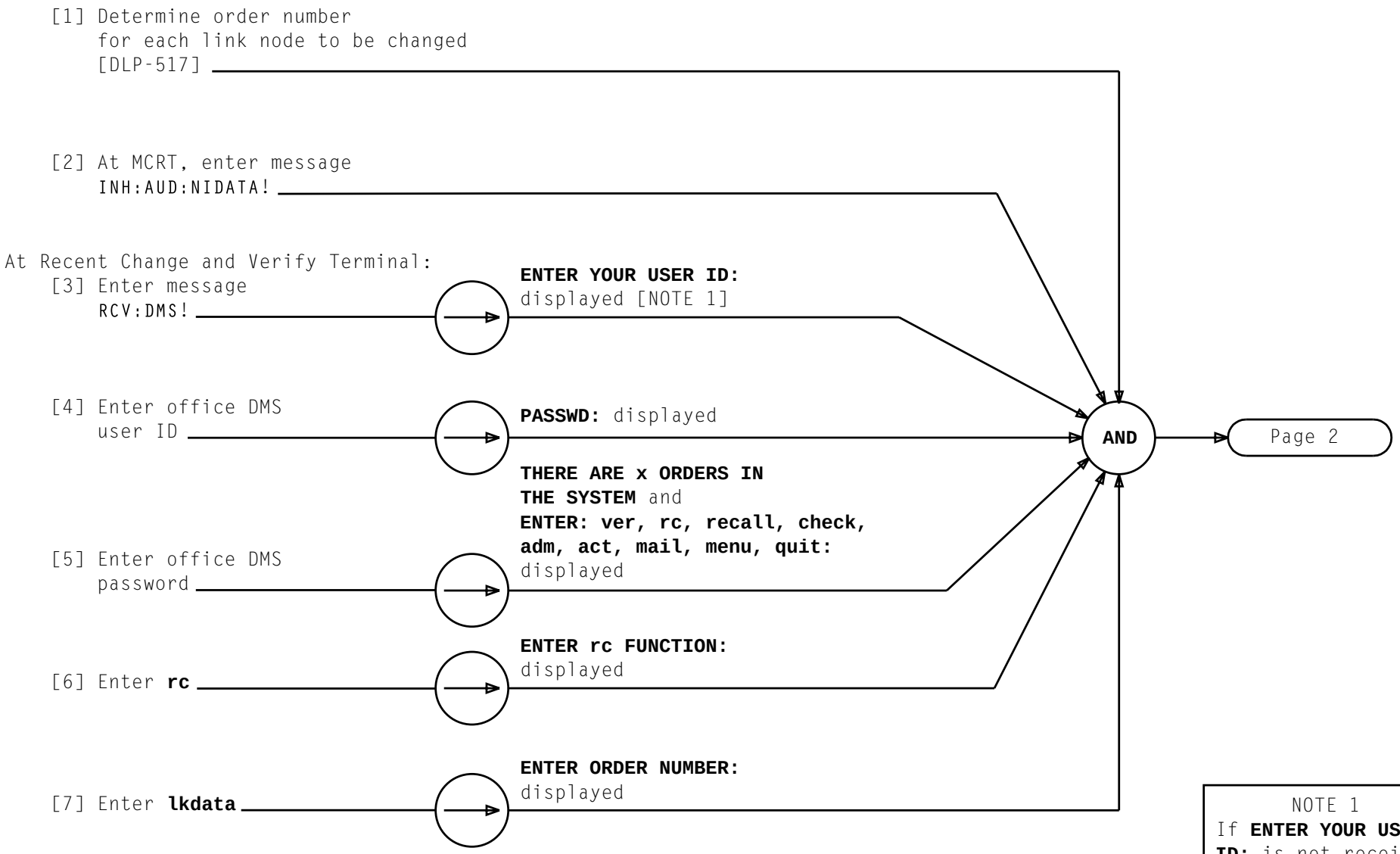

NOTE 1
If **ENTER YOUR USER ID:** is not received, **BREAK** key will have to be depressed

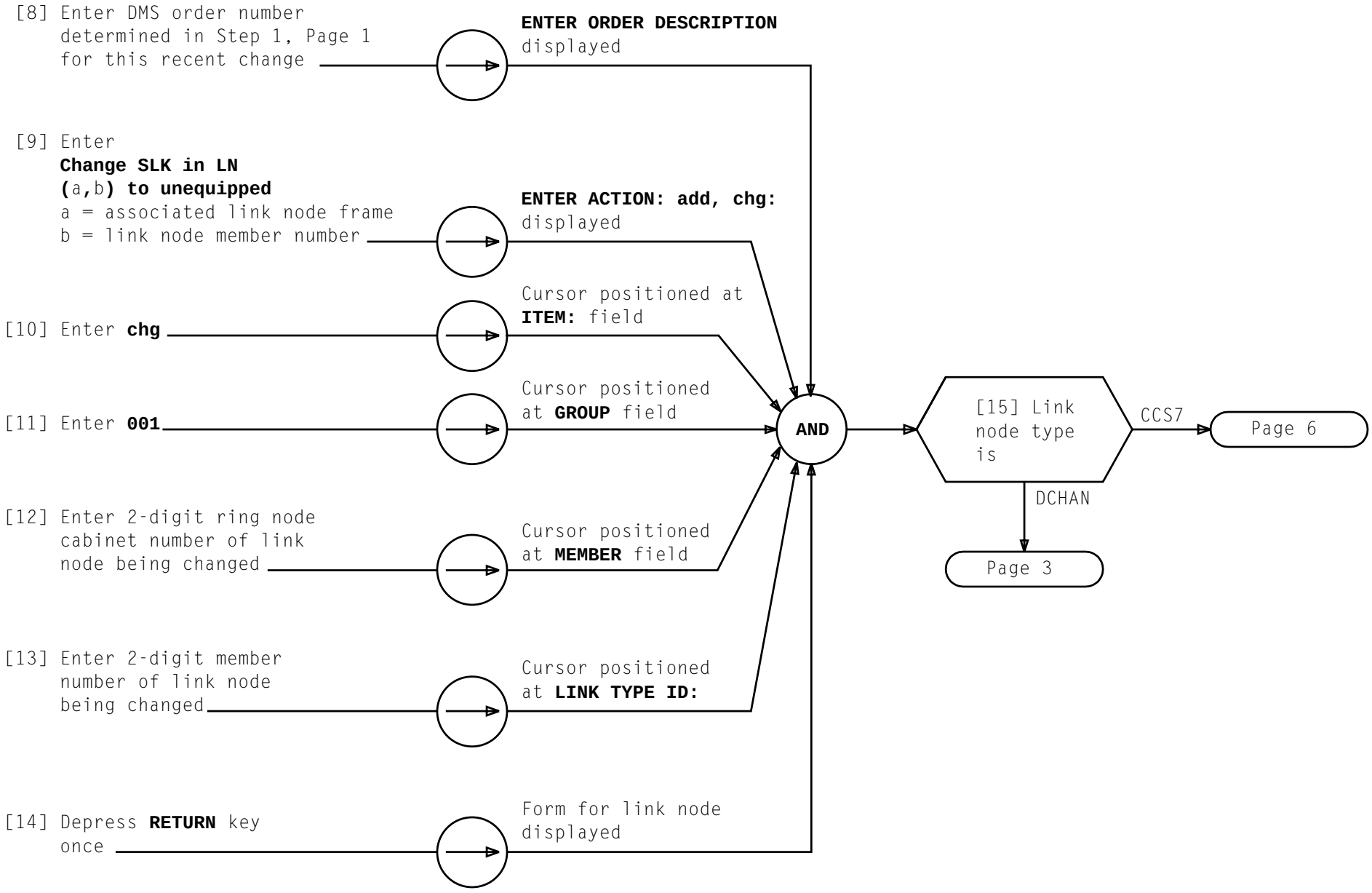

CHANGE SIGNALING LINK(S) TO UNEQ

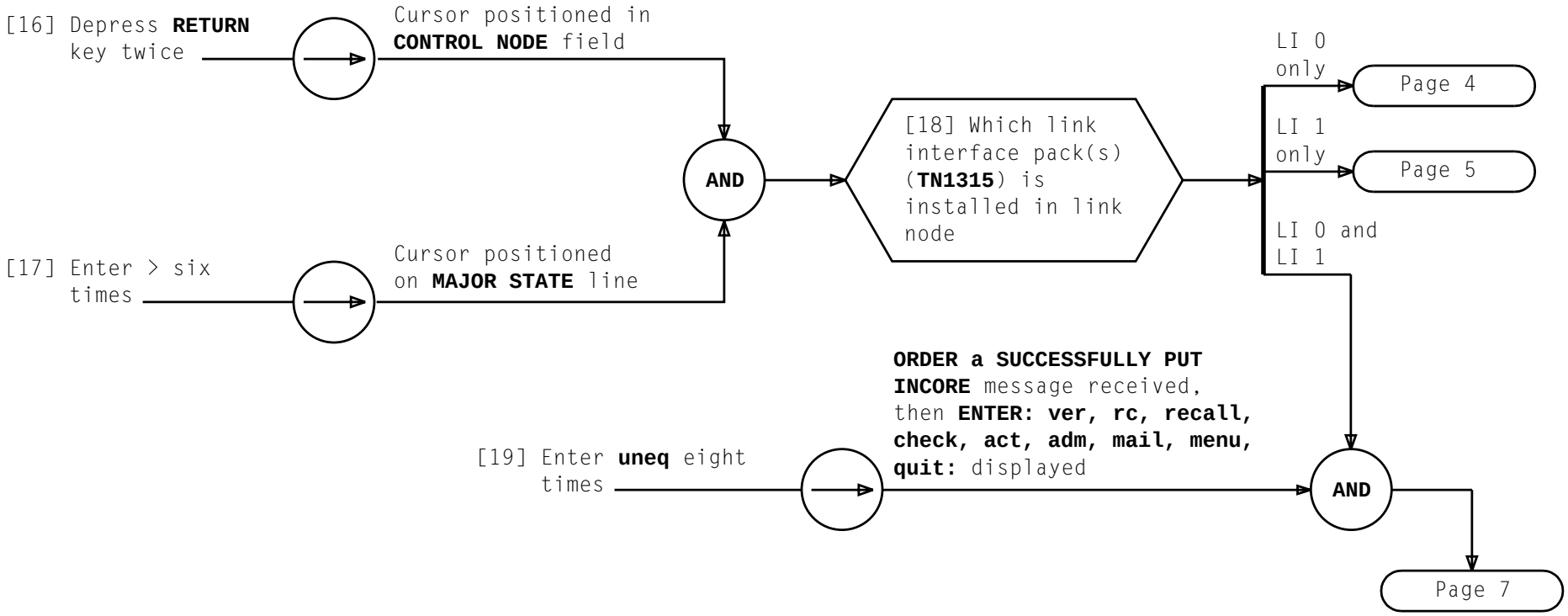

CHANGE SIGNALING LINK(S) TO UNEQ

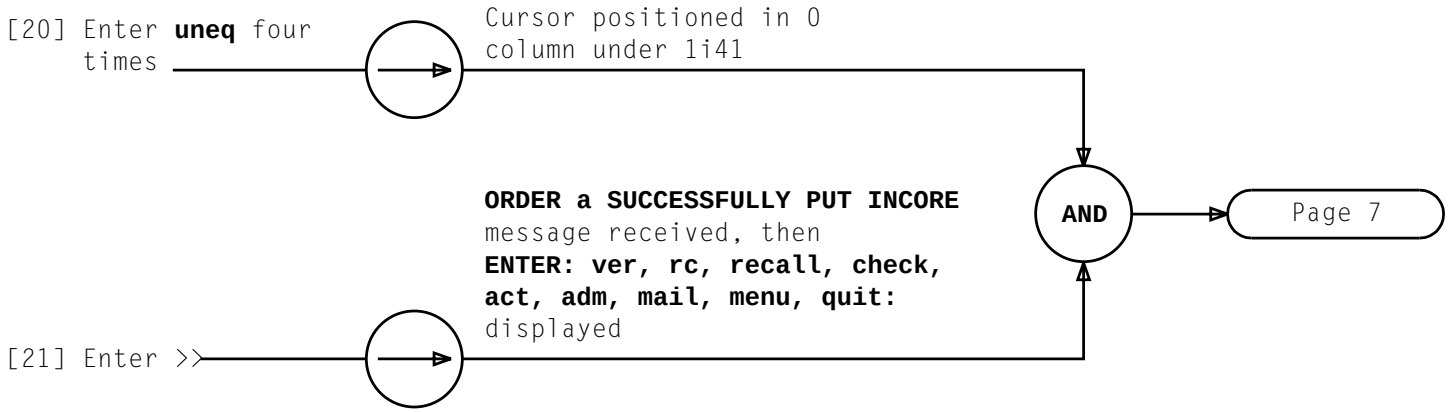

CHANGE SIGNALING LINK(S) TO UNEQ

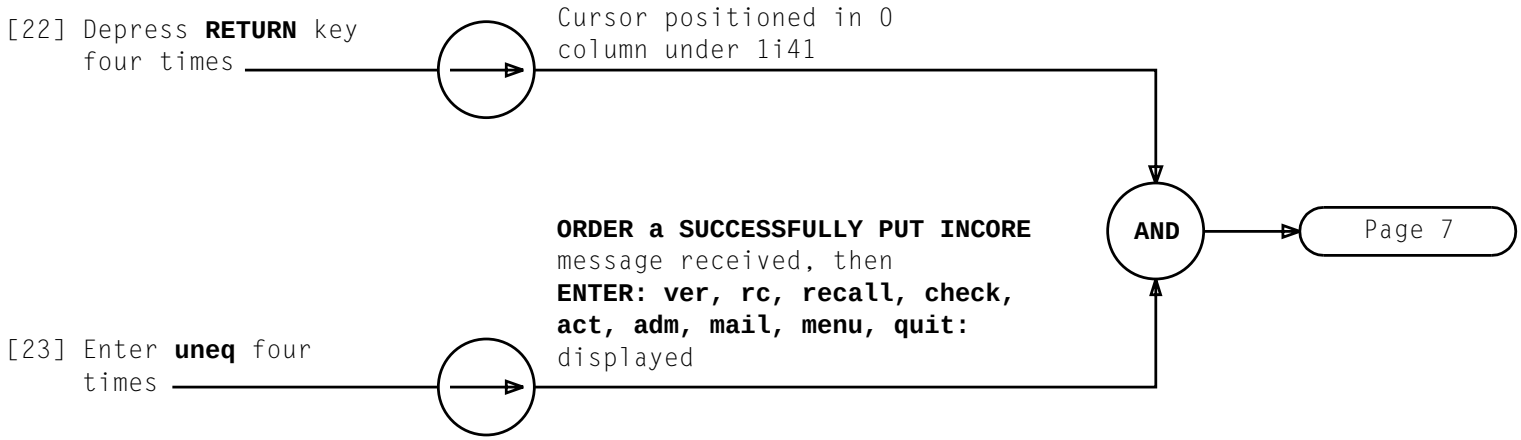

CHANGE SIGNALING LINK(S) TO UNEQ

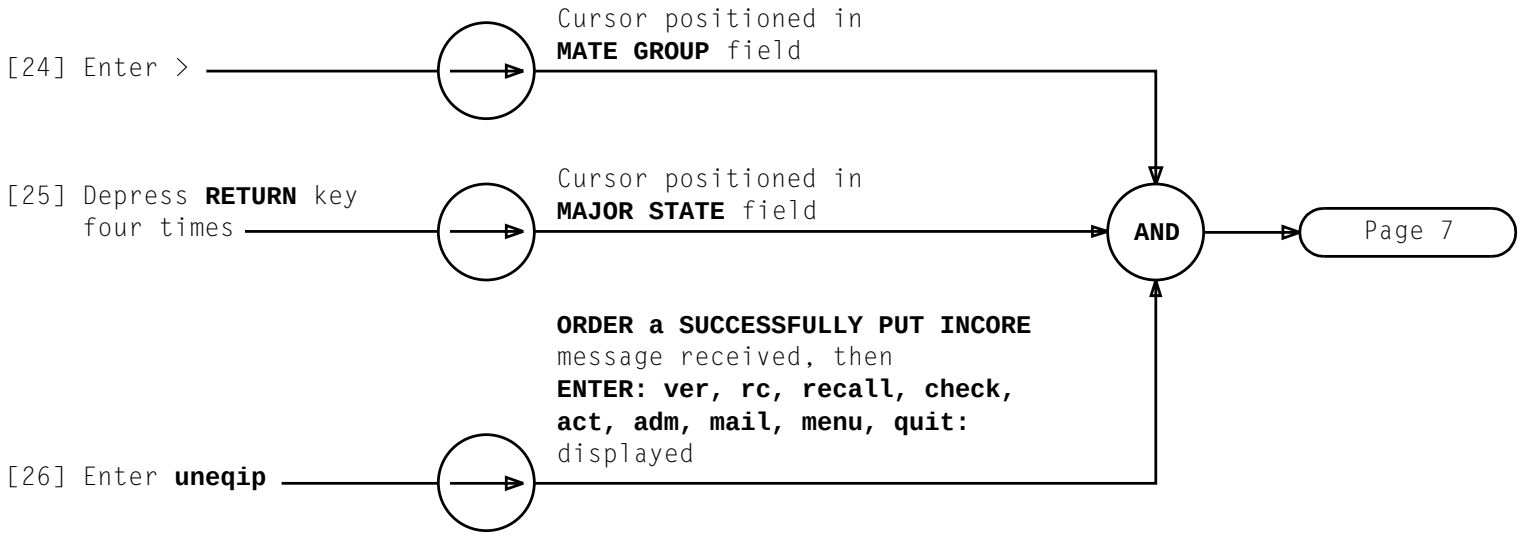

CHANGE SIGNALING LINK(S) TO UNEQ

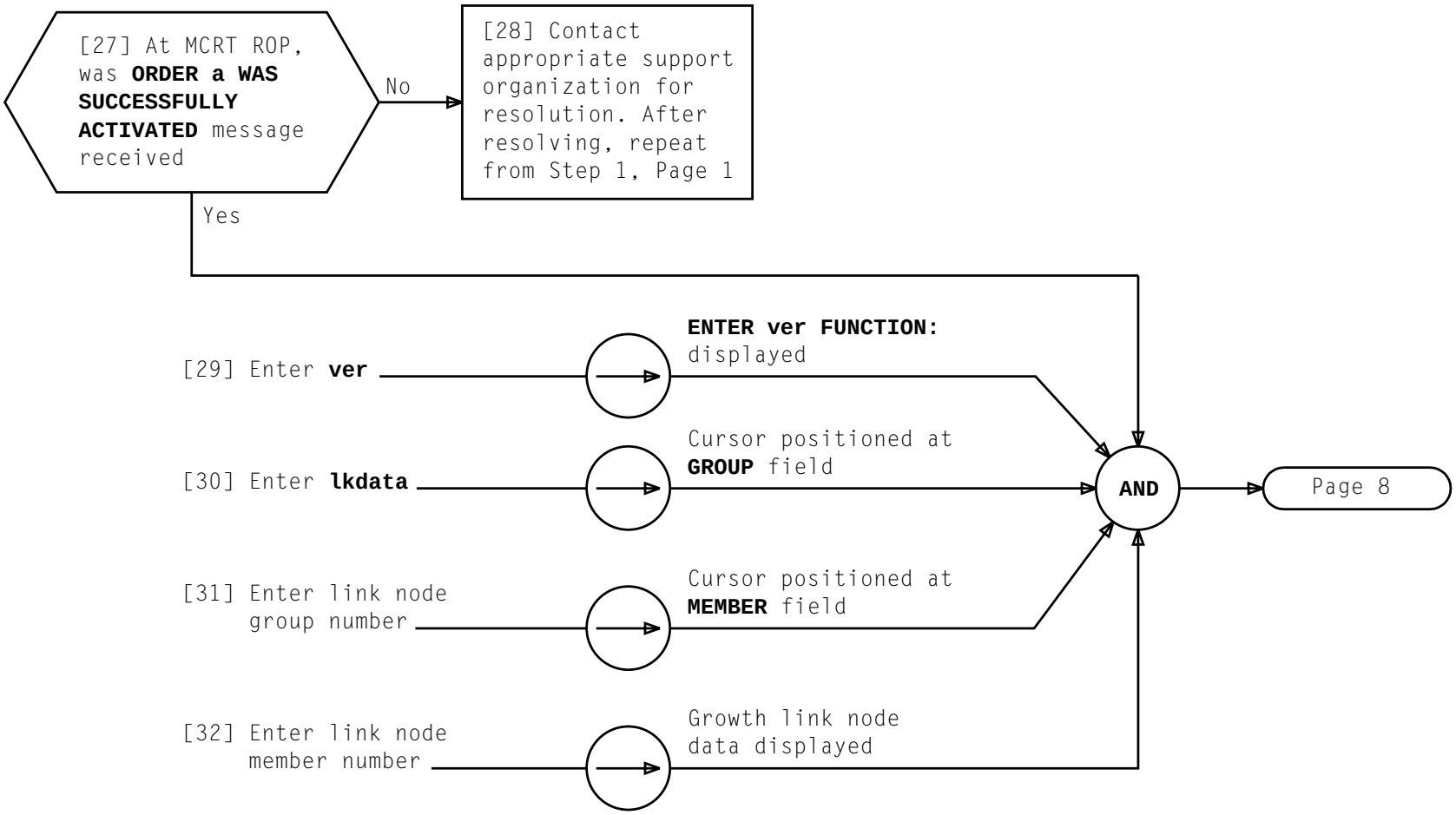

CHANGE SIGNALING LINK(S) TO UNEQ

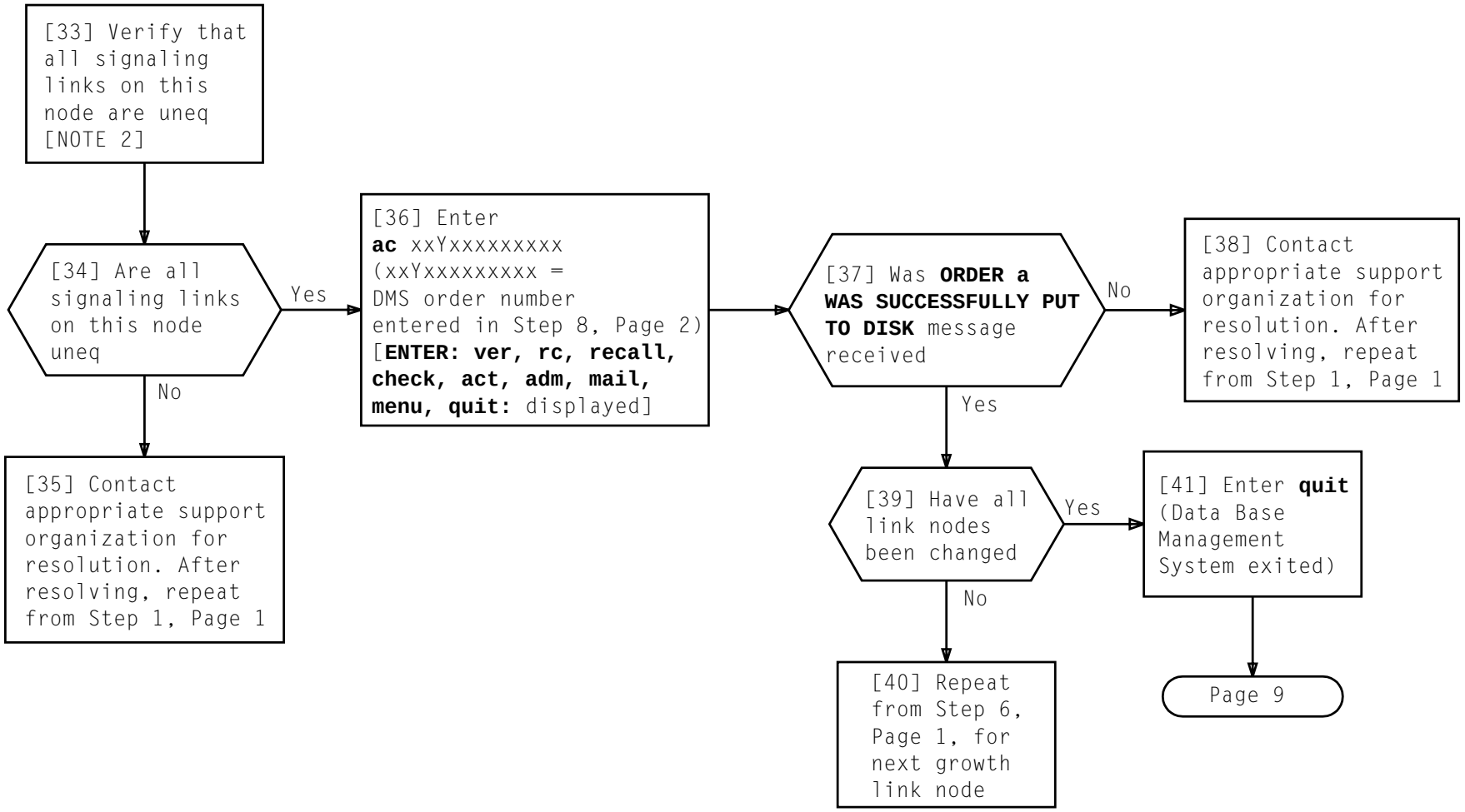

NOTE 2
Any **LINK SPEED** that was populated will be set to 0 when signaling link is set to uneq

CHANGE SIGNALING LINK(S) TO UNEQ

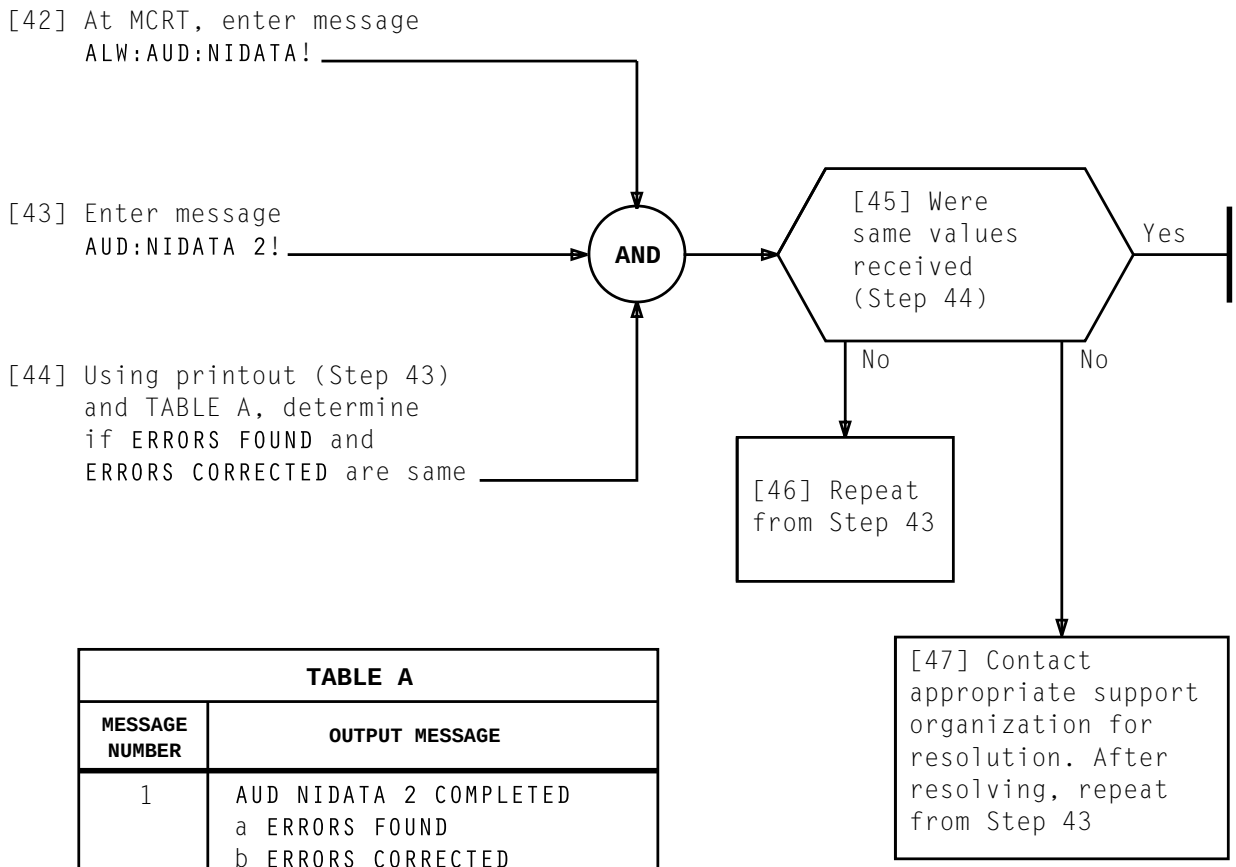

TABLE A

MESSAGE NUMBER	OUTPUT MESSAGE
1	AUD NIDATA 2 COMPLETED a ERRORS FOUND b ERRORS CORRECTED

a = Total number of errors found
b = Total number of errors corrected

CHANGE SIGNALING LINK(S) TO UNEQ

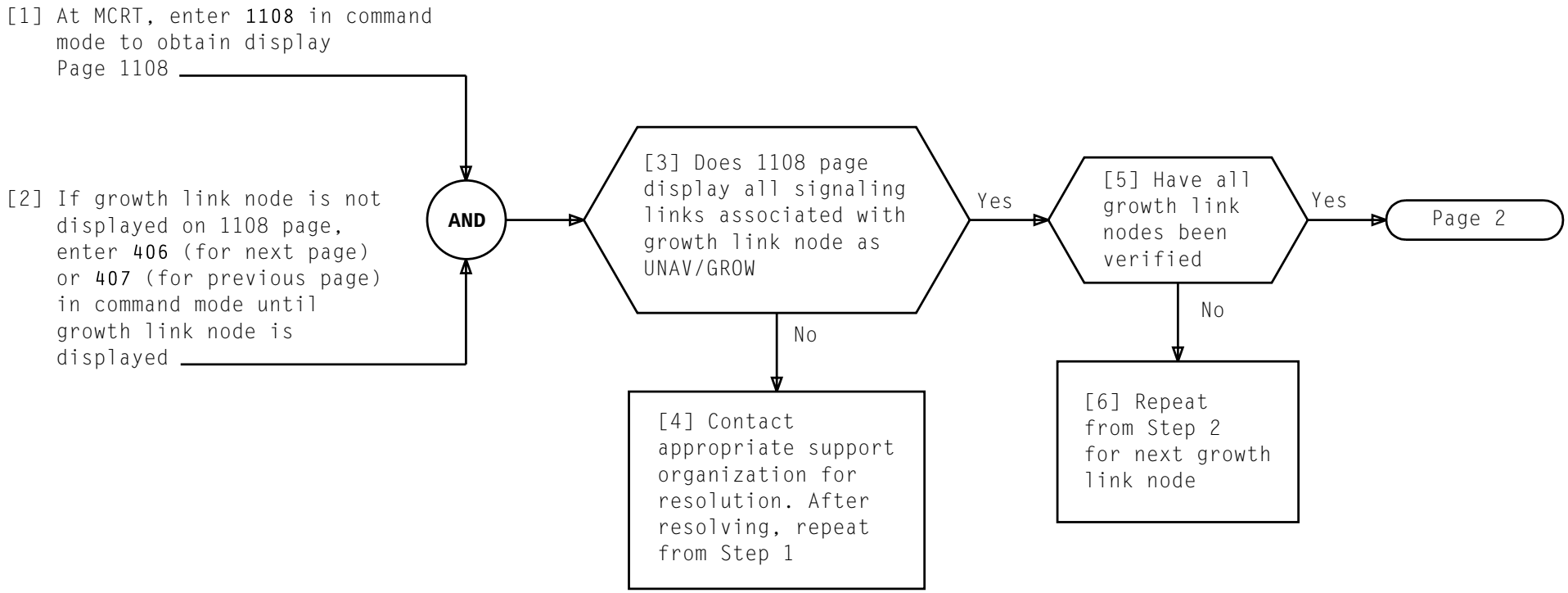

VERIFY GROWTH LINK NODE(S) DISPLAY DATA

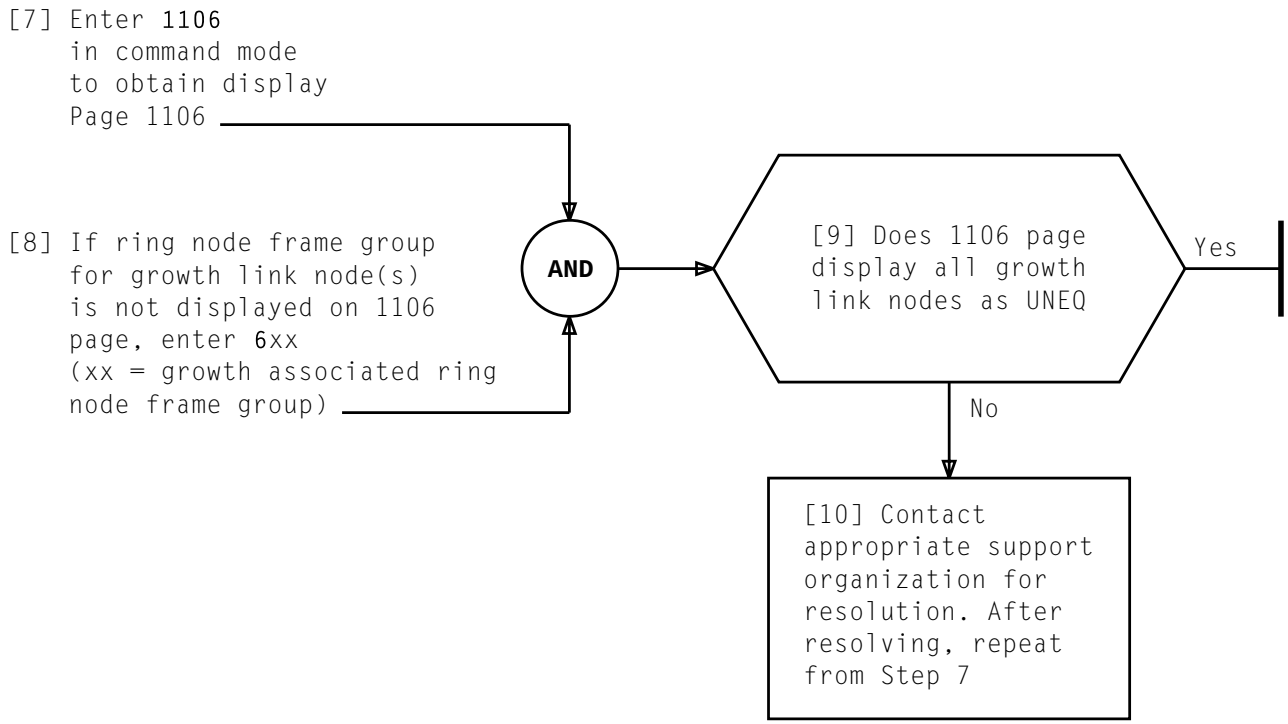

VERIFY GROWTH LINK NODE(S) DISPLAY DATA

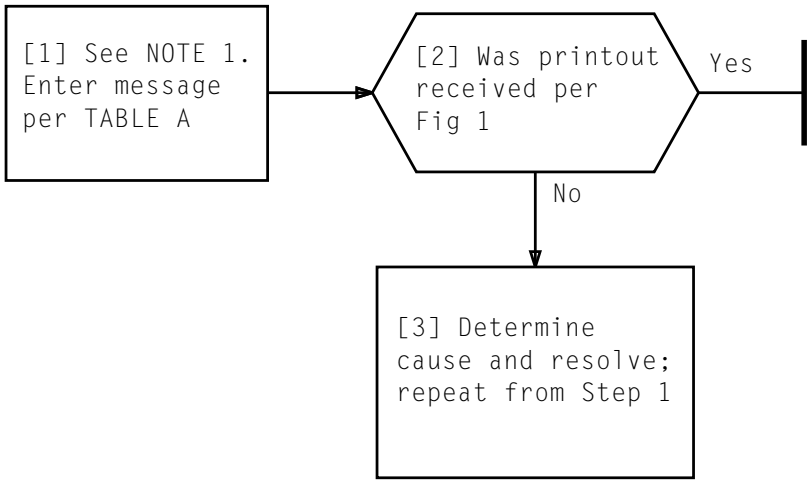


```
EXC:ENVIR:UPROC,FN"/database/tools/dln.uneqip",ARGS(DLNaa","bb")
/database/tools/dln.uneqip:STARTING
BEGINNING DEGROWTH OF LNaa bb (DLN NODE) USING THE
      /database/tools/dln.uneqip SCRIPT
LNaa bb SET TO UNEQIP USING THE/database/tools/dln.uneqip SCRIPT
/database/tools/dln.uneqip RCVECD PASSED - EXIT CODE = 0
DEGROWTH OF LNaa bb BY SCRIPT /database/tools/dln.uneqip COMPLETED
LNaa bb IS IN UNEQIP - CHANGES MADE TO INCORE DATABASE ONLY
BEGINNING DEGROWTH OF RPCD aa bb (DLN NODE) Using THE
      /database/tools/dln.uneqip SCRIPT
/database/tools/dln.uneqip RCVECD PASSED - EXIT CODE = 0
DEGROWTH OF RPCDaa NODE RPCDaa bb BY SCRIPT
      /database/tools/dln.uneqip COMPLETED
RPCDaa bb IS IN UNEQIP - CHANGES MADE TO INCORE DATABASE ONLY
EXC ENVIR UPROC /database/tools/dln.uneqip COMPLETED

Where aa = Group number of the DLN link node being grown.
      bb = Node number (5 or 10)
```

FIG. 1 - Printout for the dln.unequip (Backout) Script

TABLE A	
Message Number	**INPUT MESSAGE**
1	EXC:ENVIR:UPROC,FN"/database/tools/dln.uneqip",ARGS("DLNaa","bb")!
	aa = group number of ring node cabinet bb = member number

NOTE 1

This script is also used if backout is necessary

RECENT CHANGE DLN BEING CONVERTED AND ASSOCIATED RPCD TO UNEQUIP

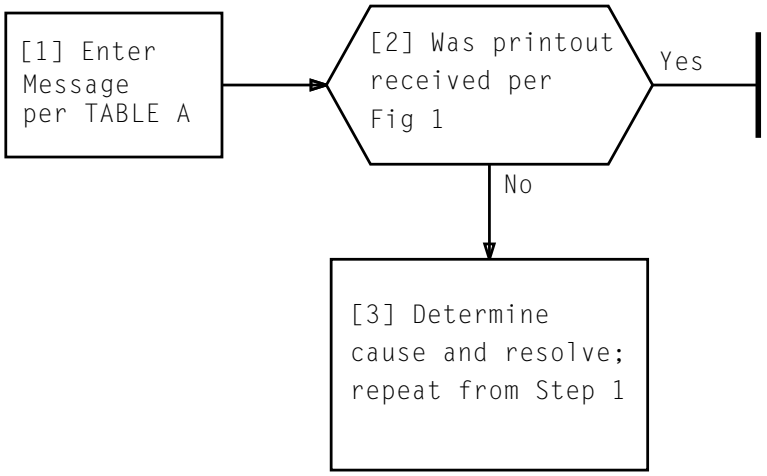


```
EXC:ENVIR:UPROC,FN"/database/tools/dln.grow",ARGS(DLNaa","bb")
/database/tools/dln.grow:STARTING
BEGINNING GROWTH OF RPCDaa bb (DLN NODE) USING THE
      /database/tools/dln.grow SCRIPT
RPCDaa bb COMPLETED FOR IRN2 DLN NODE GROWTH USING THE
      /database/tools/dln.grow SCRIPT
/database/tools/dln.grow RCVECD PASSED - EXIT CODE = 0
GROWTH OF RPCDaa bb BY SCRIPT /database/tools/dln.grow COMPLETED
RPCDaa bb INCORE CHANGES -hv = 0x200c000, mv = 0x23, path =pu/DLNI_NA,
      packcode =DLN, issue =1
RPCDaa bb IS IN  GROW - CHANGES MADE TO INCORE DATABASE ONLY
GROWTH OF LNaa bb BEGINNING
RING REPT LNaa bb IS IN THE GROWTH STATE
/database/tools/dln.grow RCVECD PASSED - EXIT CODE = 0
GROWTH OF DLN NODE LNaa bb BY SCRIPT /database/tools/dln.grow COMPLETED
LNaa bb INCORE CHANGES - hv = 0x200c000, mv = 0x23, path =pu/irn2, packcode = DLN,
issue=1
LNaa bb IS IN GROW - CHANGES MADE TO INCORE DATABASE ONLY
EXC ENVIR UPROC /database/tools/dln.grow COMPLETED


Where aa = Group number of the DLN link node being grown (00 or 32).
      bb = Node number (5 or 10)
```

FIG. 1 - Printout for the dln.grow Script

TABLE A	
Message Number	**INPUT MESSAGE**
1	EXC:ENVIR:UPROC,FN"/database/tools/dln.grow",ARGS("DLNaa","bb")!
	aa = group number of ring node cabinet bb = member number

RECENT CHANGE mv, hv, and MAJOR STATE FOR RPCD AND DLN LINK NODE

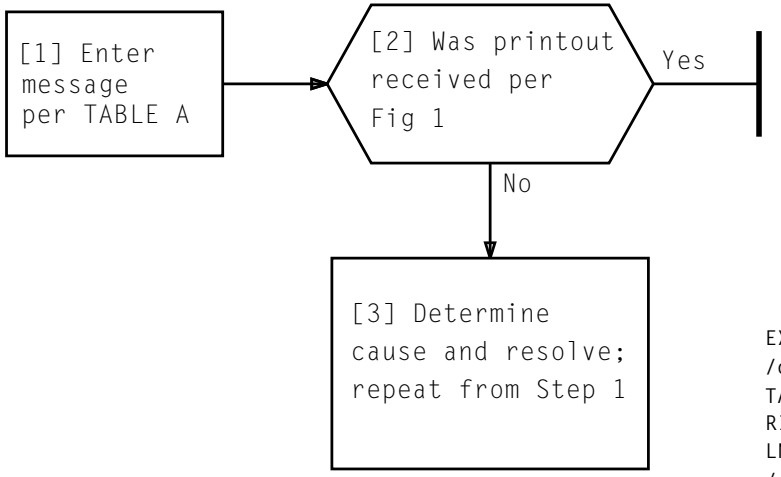


```
EXC:ENVIR:UPROC,FN"/database/tools/dln.oos",ARGS(DLNaa","bb")
/database/tools/dln.oos:STARTED
TAKING LNaa bb (DLN NODE) TO OOS USING THE /database/tools/dln.oos SCRIPT
RING REPT LNaa bb IS OUT OF SERVICE
LNaa bb SET TO OOS USING THE /database/tools/dln.OOS SCRIPT
/database/tools/dln.oos RCVECD PASSED - EXIT CODE = 0
MOVING LNaa bb TO OOS BY SCRIPT /database/tools/dln.oos COMPLETED
LNaa bb IS OOS - CHANGES MADE TO INCORE DATABASE ONLY
EXC ENVIR UPROC /database/tools/dln.oos COMPLETED

Where aa = Group number of DLN link node being grown.
      bb = Node number (5 or 10)
```

FIG. 1 - Printout for the dln.oos Script

TABLE A

Message Number	INPUT MESSAGE
1	EXC:ENVIR:UPROC,FN"/database/tools/dln.oos",ARGS("DLNaa","bb")!
	aa = group number of ring node cabinet bb = member number

RECENT CHANGE DLN LINK NODE BEING GROWN TO OOS

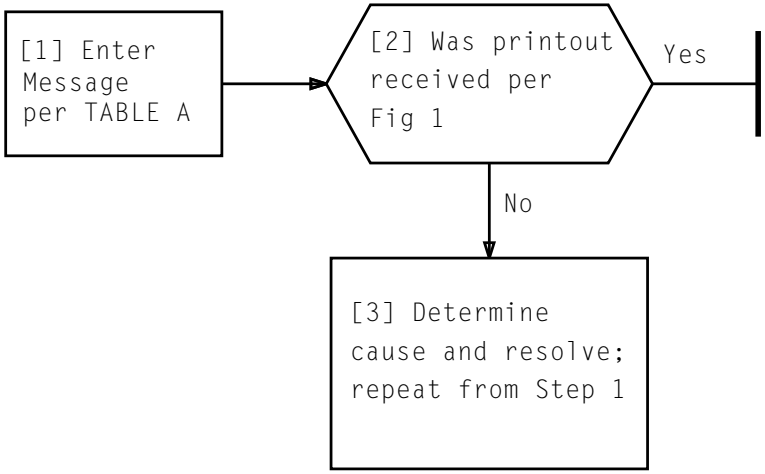


```
EXC:ENVIR:UPROC,FN"/database/tools/dln.bkout",ARGS(DLNaa")
/database/tools/dln.bkout:STARTING
BEGINNING GROWTH OF RPCDaa 03 (DLN NODE) USING THE
/database/tools/dln.bkout SCRIPT
RPCDaa bb COMPLETED FOR IRN2 DLN NODE GROWTH USING THE
/database/tools/dln.bkout SCRIPT
/database/tools/dln.bkout RCVECD PASSED - EXIT CODE = 0
GROWTH OF RPCDaa bb BY SCRIPT /database/tools/dln.bkout COMPLETED
RPCDaa dd INCORE CHANGES -hv = 0x2009000, mv = 0x23, path =pu/DLNI_NA,
packcode = DLNE, issue = 1
RPCDaa bb IS IN  GROW - CHANGES MADE TO INCORE DATABASE ONLY
GROWTH OF LNaa 03 BEGINNING
/database/tools/dln.bkout RCVECD PASSED - EXIT CODE = 0
GROWTH OF DLN NODE LNaa 03 BY SCRIPT /database/tools/dln.bkout COMPLETED
LNaa 03 INCORE CHANGES - hv = 0x2009000, mv = 0x23, path =pu/iun, packcode = DLNE,
issue=1, device
LNaa 03 IS IN GROW - CHANGES MADE TO INCORE DATABASE ONLY
EXC ENVIR UPROC COMPLETED


Where aa = Group number of the DLN link node being grown.
      bb = Node Number (5 or 10)
```

FIG. 1 - Printout for the dln.bkout Script

TABLE A	
Message Number	**INPUT MESSAGE**
1	EXC:ENVIR:UPROC,FN"/database/tools/dln.bkout",ARGS("DLNaa","bb")!
	aa = group number of ring node cabinet bb = member number

RECENT CHANGE mv, hv, and MAJOR STATE FOR RPCD AND DLN LINK NODE

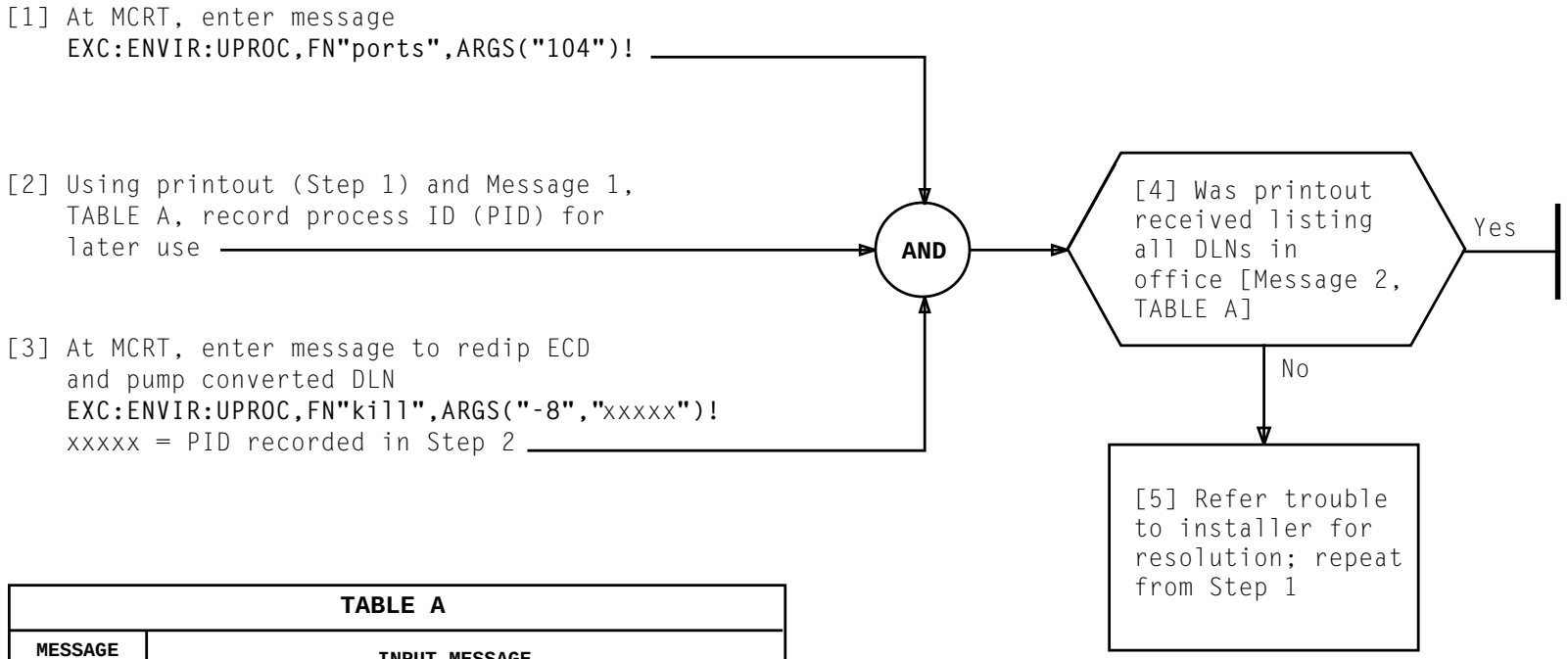

TABLE A

MESSAGE NUMBER	INPUT MESSAGE
1	EXC ENVIR UPROC ports COMPLETED port #104 owned by xxxxx
2	EXC ENVIR UPROC kill COMPLETED REPT DLNCM PROC (REDIP) STARTED a DLNs LN32-2 LN00-2 [LN32-7 LN00-7]* REPT DLNCM PROC (Redip) CODE 0

XXXXX = DLNCM process ID
a = Number of DLNs in office (2 or 4)
* DLNs not shown in 2 DLN office

REDIP ECD AND PUMP CONVERTED DLN

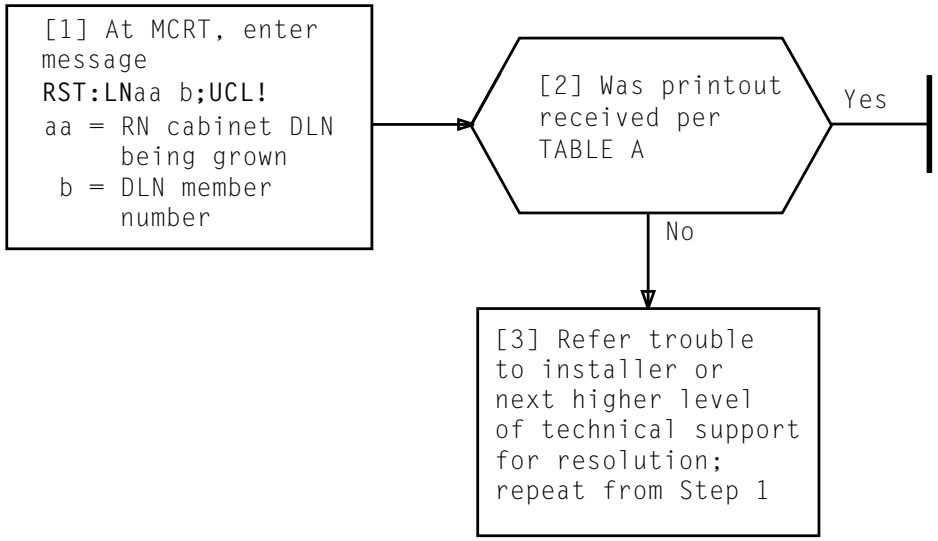

TABLE A

MESSAGE NUMBER	OUTPUT MESSAGE
1	RST LNaa b TASK n MESSAGE STARTED RING RST LNaa b COMPLETED REPT DLNCM LNaa-b ON-LINE (X'nnnnnnnn) REPT DLNCM PROC (Pump) LNaa-b PUMP STARTED REPT DLNCM PROC (Pump) LNaa-b nnnn (nnn) BINKS PUMPED IN nnnn MSEC REPT DLNCM PROC (Pumpapp) LNaa-b pump STARTED X'nnnnnnnn REPT DLNCM PROC (Pumpapp) LNaa-b DBTOC PUMPED nnnn BYTES MSEC nnn REPT DLNCM PROC (Pumpapp) LNaa-b PCPGTT PUMPED nnnn BYTES MSEC nnn REPT DLNCM PROC (Pumpapp) LNaa-b INGTT PUMPED nnnn BYTES MSEC nnn REPT DLNCM PROC (Pumpapp) LNaa-b MISCGTT PUMPED nnnn BYTES MSEC nnn REPT DLNCM PROC (Pumpapp) LNaa-b pump COMPL nnnn BYTES MSEC nnn

RESTORE GROWTH DLN UNCONDITIONALLY

ITEM	ISSUE	ITEM	ISSUE	ITEM	ISSUE	ITEM	ISSUE	ITEM	ISSUE	ITEM	ISSUE
IXL-001		• DLP-517		DLP-552							
NTP-002		DLP-518		DLP-553							
NTP-003		• DLP-519		• DLP-554							
NTP-004		• DLP-520		DLP-555							
NTP-005		• DLP-521		DLP-556							
NTP-006		• DLP-522		DLP-557							
NTP-007		• DLP-523		DLP-558							
NTP-008		• DLP-524		DLP-559							
NTP-009		• DLP-525		DLP-560							
NTP-010		DLP-526		DLP-561							
NTP-011		• DLP-527		DLP-562							
NTP-012		DLP-528		DLP-563							
NTP-013		DLP-529		DLP-564							
NTP-014		DLP-530		DLP-565							
NTP-015		DLP-531		DLP-566							
NTP-016		DLP-532		DLP-567							
NTP-017		DLP-533		DLP-568							
NTP-018		DLP-534		DLP-569							
DLP-500		DLP-535		• DLP-570							
DLP-501		DLP-536		• CKL-891							
DLP-502		DLP-537		TNG-893							
DLP-503		DLP-538		DPL-895							
DLP-504		DLP-539									
DLP-505		DLP-540									
DLP-506		• DLP-541									
DLP-507		DLP-542									
DLP-508		DLP-543									
DLP-509		DLP-544									
DLP-510		DLP-545									
DLP-511		DLP-546									
DLP-512		DLP-547									
DLP-513		DLP-548									
DLP-514		DLP-549									
DLP-515		DLP-550									
DLP-516		DLP-551									

• REVISED OR ADDED ITEM ☐ CANCELED ITEM

Issue 6 | SEP 1998

234-153-055 | CKL

CHECKLIST

PAGE 1 of 1 | 891

This book is called a Task Oriented Practice or "TOP." It is a programmed document that gives step-by-step instructions to enable you to do a job (or task). If used correctly, TOP can be a very useful aid when completing everyday tasks.

A TOP is a programmed document giving step-by-step instructions to do a task. Since the instructions are given in the order that they must be done, you cannot enter a procedure except at the beginning. You *must* do the step-by-step instructions in the order given. Failure to follow the instructions in the proper order may cause service interruptions.

Remember, a TOP contains all the instructions needed to do a task. If you are doing the job for the first time, you are given step-by-step instructions with all detail that enables you to complete the job. Remember, TOP can provide you the information you need regardless of your experience in doing a job.

The work that you do can be classified into two broad job categories — *Trouble Clearing* and *Non-Trouble Clearing*. The following are the TOP definitions for these two job categories:

Trouble Clearing

Trouble clearing may be done in answering a customer complaint or in responding to an office alarm, a trouble report, or an abnormal TTY printout, etc.

Non-Trouble Clearing

Non-trouble clearing is not connected with trouble clearing. These are procedures performed to accept a system after a system has been installed, turn up a system for service, maintain a system according to a controlled maintenance plan, etc.

Now glance briefly at the front cover. In the upper right corner is a 9-digit number which identifies the volume. Near the center is the title of the volume which tells you something about the contents, such as the system (or subsystem) name and perhaps what kind of jobs are included in the volume. Next is the decision-action-logic diagram which directs you either to this training package or to 001 depending on your ability to use TOP.

Now turn to Figure 1 which shows a typical page of 001. In the lower left is the title, "TASK INDEX LIST" which tells you something about this list, such as it is a listing of tasks arranged in alphabetical order. This list is actually a listing of the tasks included in the volume. The tasks are listed in alphabetical order and permuted on key words to simplify locating a task. On the right side of the page is a column of reference numbers under the heading "THEN GO TO." To use this list, locate the job to be done and turn to the reference number in the "THEN GO TO" column.

Now assume that you have been assigned the task of performing a system test on a system covered by a TOP. On 001 in Figure 1, locate the job "System Test." Notice that this entry tells you to go to NTP-016 (Non-Trouble Procedure) under the "THEN GO TO" column. Next you locate the procedure, NTP-016. All procedures in a TOP are arranged in numerical sequence. In actual use of TOP, you would simply turn to the procedure.

HOW TO USE TOP

FIND YOUR JOB IN THE LIST BELOW . . . . . THEN GO TO	
Alert; External — Horn, Ringer, Etc. — Remove	NTP-028
Amplifiers; Channel — Recorded Announcement Frame — Test	NTP-009
ARO3 PWR ALM RA bb — bb = 16-30	TAP-105
BRDG LED — Does Not Light — Correct	TAP-117
Bridging Controller; Trunk — J1CO15MB — Replace	DLP-572
Channel Amplifiers — Recorded Announcment Frame — Test	NTP-009
Drum Wiper — Common Systems Recorded Announcement Frame — Inspect	NTP-010
Extended Station Capability — Nonkey Set Only — Reported Failure	TAP-123
External Alert — Horn, Ringer, Etc. — Remove	NTP-028
Interchange Two Working Station Numbers	NTP-081
LED; **BRDG** — Does Not Light — Correct	TAP-117
Loudspeaker Paging — Add	NTP-059
Loudspeaker; — Remove	NTP-006
Station Capability; Extended — Nonkey Set Only — Reported Failure	TAP-123
System Test — Perform	NTP-016
Trunk Bridging Controller — J1CO15MB — Replace	DLP-572
TTY Printout — ARO3 PWR ALM RA bb — bb = 16-30	TAP-105
Wiper; Drum — Common Systems Recorded Announcment Frame — Inspect	NTP-010

TASK INDEX LIST (Contd)	Issue 1	DEC 1980
	123-456-789	IXL
	PAGE 2 of 2	001

Figure 1

Look over the following example which shows a typical page of NTP-016. Note that the items are numbered in the left column. They *must* be completed in that order. In item 2 there are some lettered (A, B, C) items. These lettered items are optional ways to do an item; that is, you only have to do one of the lettered items.

Remember that this procedure gives all the items that must be done and the order in which they must be done to complete the job. If you know how to do a task, you should proceed without going to the referenced details in the "FOR DETAILS, GO TO" column. If, on the other hand, you need additional details on how to do the task, turn to the procedure listed in the "FOR DETAILS, GO TO" column. In either case, after completing a task continue with the next task.

A TOP is designed so that you have to read only what is necessary to get your job done. If you know how to do a task, look no further for the "how to" information — just do the task and go on to the next task. This idea is called "bypassing" in TOP. In addition to not having to

DO THE ITEMS BELOW IN THE ORDER LISTED	FOR DETAILS, GO TO
1 Obtain Support Apparatus Listed Below: • Hewlett-Packard 3531A Transmission Measuring Set • 2P4C Patching Cord	—
2 Place SEC/SEB in Off-Line Mode	—
A. If in On-Line Mode, Change System From On-Line to Off-Line	DLP-509
B. If Powered Down, Condition System for Off-Line Operation as Follows:	—
1. Power up Minicomputer	DLP-503
2. Power up Line Printer	DLP-528
3. Power up Maintenance Terminal	DLP-510
7 Run Computer Display Terminal Test for All Positions	DLP-513
8 Mount Tape	DLP-500

Issue 1	DEC 1980
123-456-789	NTP
PAGE 1 of 4	016

PERFORM SYSTEM TEST

look further for details, three other ways of "bypassing" are provided in TOP to help you bypass information you already know (see Figure 2):

Summary Statement

A summary statement is used with a procedure to tell you briefly how to do the procedure and what type measurement or result can be observed. If you can do the procedure after reading the summary, perform the procedure without reading any further. Simple procedures may not have summaries.

Result Statement

A result statement may be used in a flow-charted procedure along with the AND symbol. If, after reading the results statement, you know how to do the action indicated, perform the procedure without reading the steps associated with the AND symbol.

Support Procedures

The following reference in TOP refers to a support procedure:
The support procedure [DLP-530] (Detailed Level Procedure) provides the information on how to operate the VTVM. Here again, if you already know how to operate the VTVM, perform the procedure without looking up any further information.

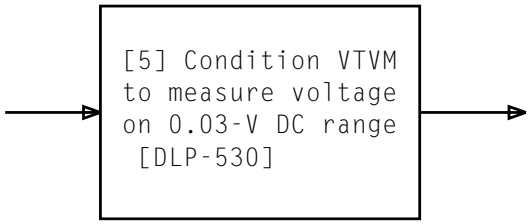

Assume that you are doing a system test on a system covered by a TOP. In the process of doing this test, you are instructed to mount a tape. For the purposes of this example, assume that you do not know how to mount the tape and must look up additional details. Figure 2 on Page 5 shows you examples of bypassing that can be used. Take a few moments to examine this figure and make sure you understand the techniques of bypassing.

While using a TOP, you will probably run across a reference similar to the following:

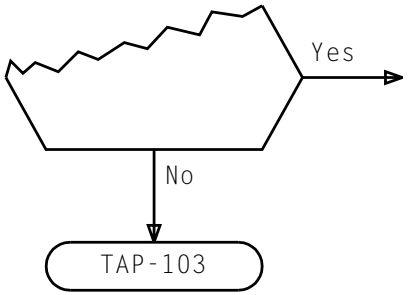

This reference to TAP-103 (Trouble Analysis Procedure) indicates that the equipment is not operating correctly, and that you should refer to TAP-103 and clear this trouble condition. After clearing the trouble, you should re-enter the flowchart at the beginning (Step 1).

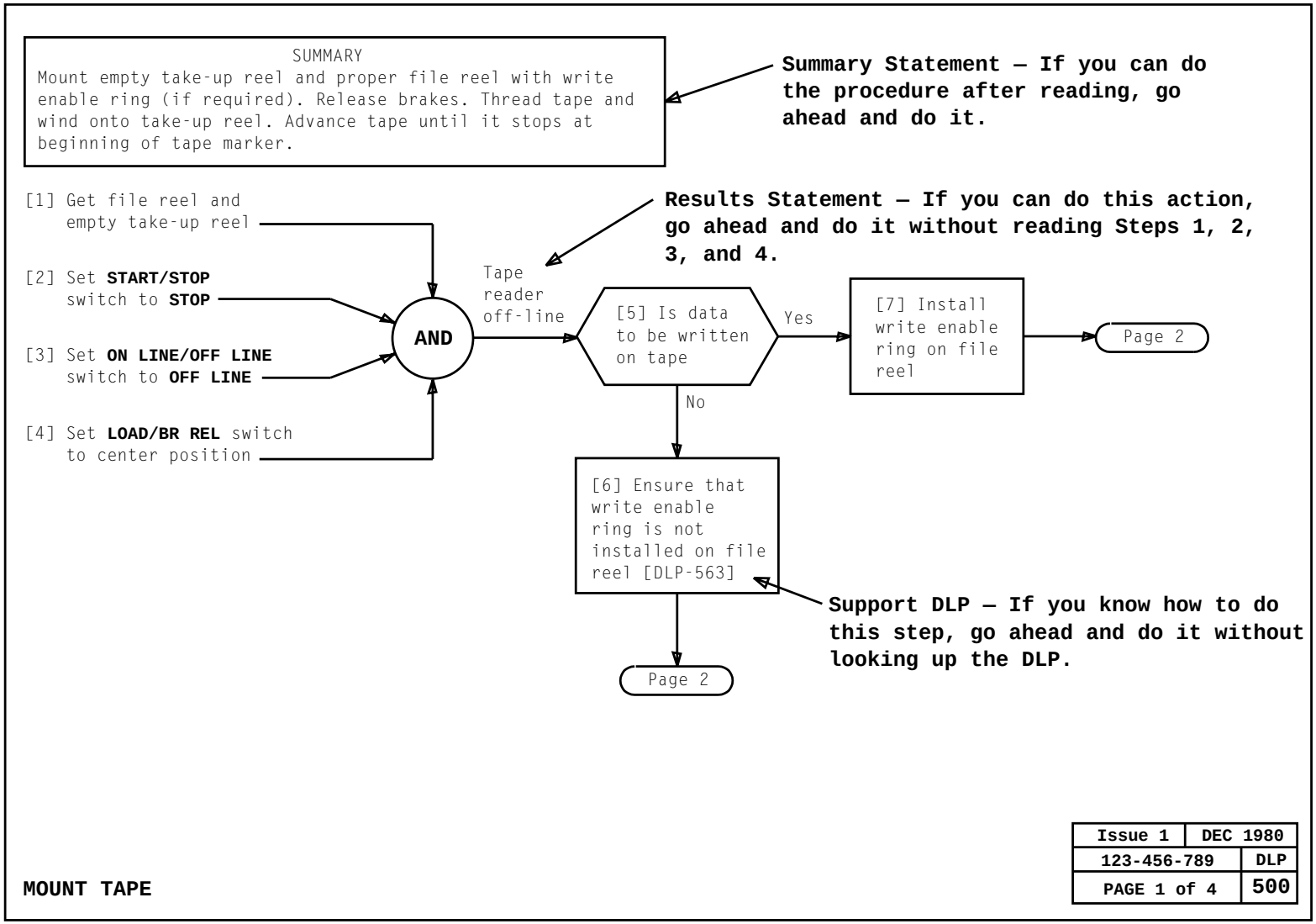
SUMMARY
Mount empty take-up reel and proper file reel with write enable ring (if required). Release brakes. Thread tape and wind onto take-up reel. Advance tape until it stops at beginning of tape marker.
Summary Statement – If you can do the procedure after reading, go ahead and do it.
[1] Get file reel and empty take-up reel
[2] Set START/STOP switch to STOP
[3] Set ON LINE/OFF LINE switch to OFF LINE
[4] Set LOAD/BR REL switch to center position
AND
Results Statement – If you can do this action, go ahead and do it without reading Steps 1, 2, 3, and 4.
Tape reader off-line
[5] Is data to be written on tape
Yes
[7] Install write enable ring on file reel
Page 2
No
[6] Ensure that write enable ring is not installed on file reel [DLP-563]
Support DLP – If you know how to do this step, go ahead and do it without looking up the DLP.
Page 2
MOUNT TAPE
Issue 1 DEC 1980
123-456-789 DLP
PAGE 1 of 4 500

Figure 2

This idea can be carried further. In some cases, a decision block may have more than one abnormal output. This means that you should try more than one solution to the problem. See the following example.

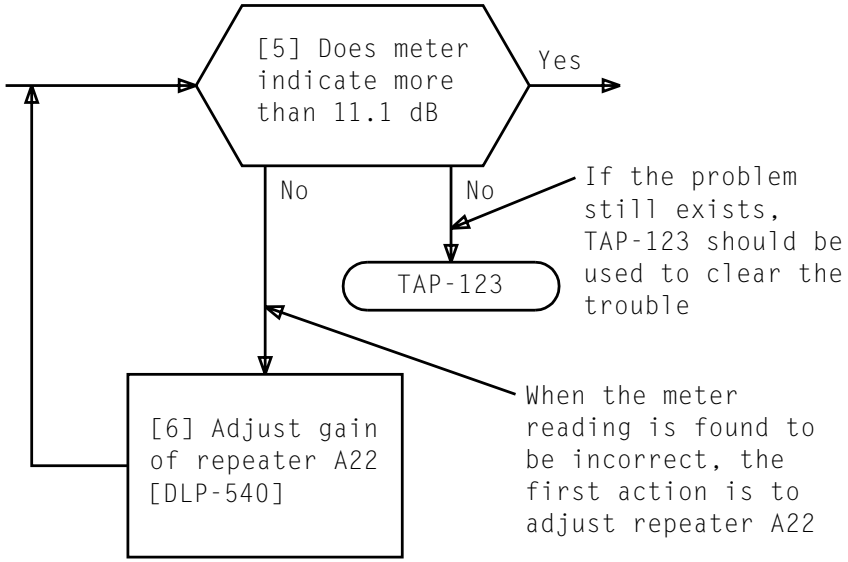

Trouble-clearing information in TOP is used basically the same way as non-trouble-clearing information. When an alarm or trouble report requires you to troubleshoot a system covered by a TOP, the TASK INDEX LIST (IXL-001) is the place to start. After locating your task on IXL-001, you are referenced to a Trouble Analysis Procedure (TAP) to find the information to aid in the location of the trouble. The TAP may reference to other information, such as Trouble Analysis Data (TAD) or Isolation Diagram (ISD) as an aid in the trouble-clearing process.

Now assume that you have to clear a major alarm on a terminal in a system covered by a TOP. Figure 3 on Page 7 shows how to access and how to use trouble-clearing information.

A TOP shows hard-wired and plug-in units on Isolation Diagrams (ISD) in the following manner:

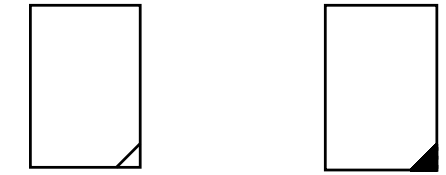

Always do a job safely. Below are three things you should heed in TOP:

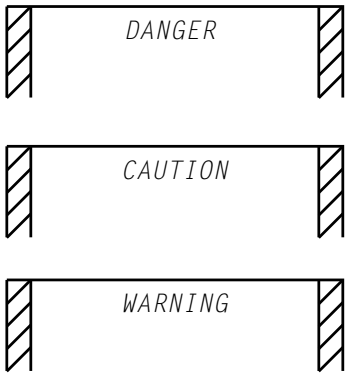

— *means there is a possibility of personal injury*

— *means there is a possibility of service interruptions*

— *means there is a possibility of equipment damage*

TABLE A on Page 8 shows some of the more important symbols and definitions.

While using TOP, if you find errors, or if a procedure is inadequate or missing, call the TOP HOTLINE number shown on the front cover and title page. Your comments are greatly needed to help prepare better documentation. Comments may also be forwarded using the form provided in the front of this TOP.

Now that you know how to use TOP, return to IXL-001 and find the task you need to do.

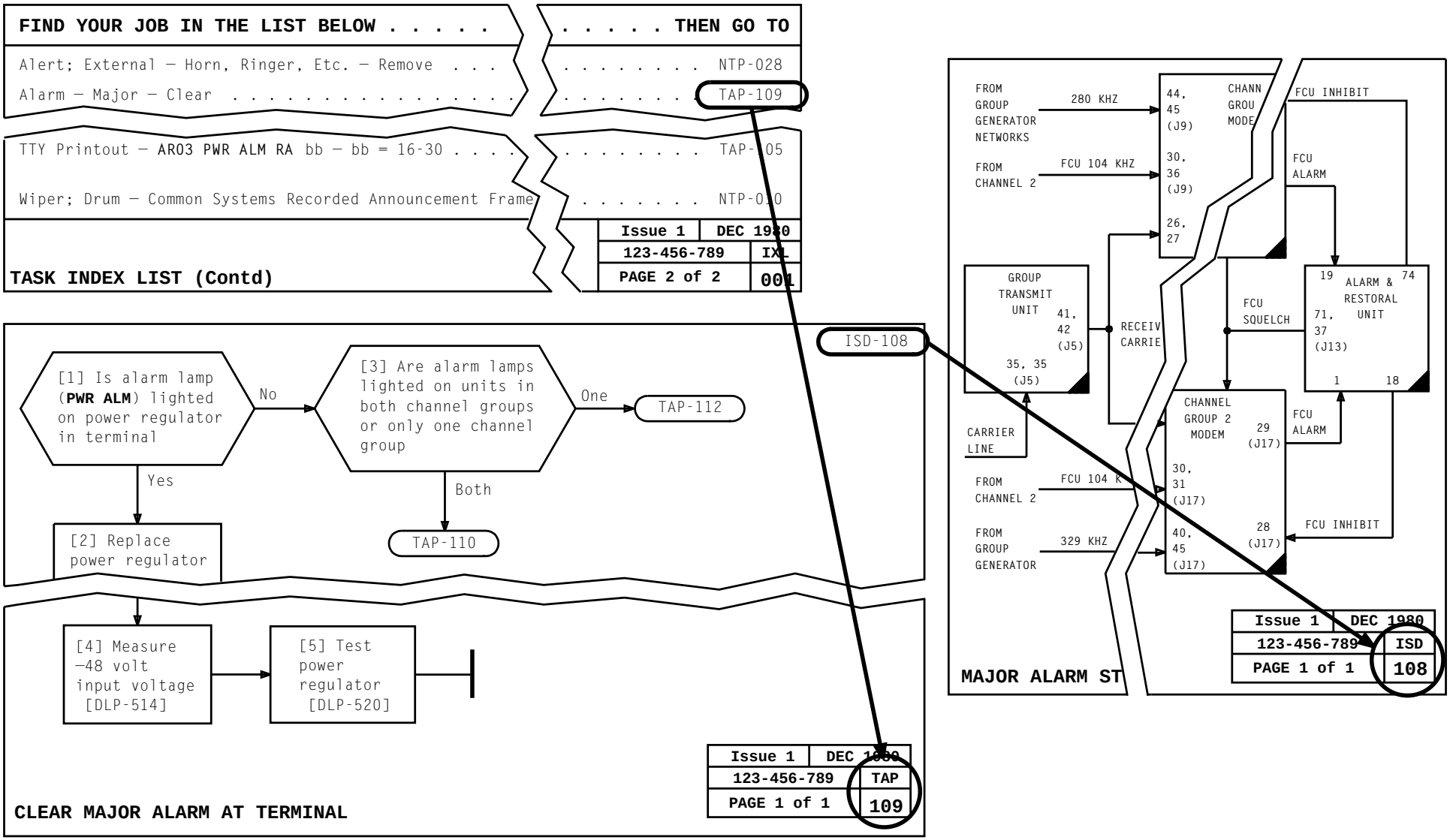
FIND YOUR JOB IN THE LIST BELOW . . . . .
. . . . . THEN GO TO
Alert; External — Horn, Ringer, Etc. — Remove NTP-028
Alarm — Major — Clear TAP-109
TTY Printout — AR03 PWR ALM RA bb — bb = 16-30 . . . . . TAP-105
Wiper; Drum — Common Systems Recorded Announcement Frame NTP-010
Issue 1 DEC 1980
123-456-789 IXL
PAGE 2 of 2 001
TASK INDEX LIST (Contd)
ISD-108
[1] Is alarm lamp (PWR ALM) lighted on power regulator in terminal
No
[3] Are alarm lamps lighted on units in both channel groups or only one channel group
One
TAP-112
Yes
Both
[2] Replace power regulator
TAP-110
[4] Measure −48 volt input voltage [DLP-514]
[5] Test power regulator [DLP-520]
Issue 1 DEC 1980
123-456-789 TAP
PAGE 1 of 1 109
CLEAR MAJOR ALARM AT TERMINAL
FROM GROUP GENERATOR NETWORKS
280 KHZ
FROM CHANNEL 2
FCU 104 KHZ
44, 45 (J9)
30, 36 (J9)
26, 27
CHANN GROU MODE
FCU INHIBIT
FCU ALARM
GROUP TRANSMIT UNIT
41, 42 (J5)
35, 35 (J5)
RECEIV CARRIE
FCU SQUELCH
19
ALARM & RESTORAL UNIT
74
71, 37 (J13)
1
18
CHANNEL GROUP 2 MODEM
29 (J17)
CARRIER LINE
30, 31 (J17)
FROM CHANNEL 2
FCU 104 K
FCU ALARM
FROM GROUP GENERATOR
329 KHZ
40, 45 (J17)
28 (J17)
FCU INHIBIT
Issue 1 DEC 1980
123-456-789 ISD
PAGE 1 of 1 108
MAJOR ALARM ST

Figure 3

TABLE A
IMPORTANT TOP SYMBOLS AND DEFINITIONS

SYMBOL	DEFINITION
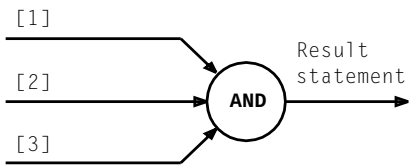	The AND operation symbol is used where the successful completion of a group of instructions accomplishes a meaningful result that can be defined. The symbol indicates that each input instruction must be performed in the order given to accomplish the output (result statement). In instances where results cannot be defined, results statements are not provided.
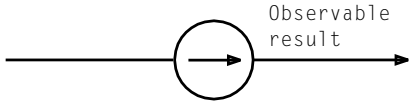	The flow-through symbol relates graphically a single instruction to the expected observable result(s).
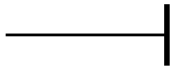	The end-of-procedure symbol denotes that the procedure has been completed.
	The reference bubble symbol indicates an exit from a page (either to a continuation page or to trouble-clearing data) or indicates the starting point of a procedure.
Acceptance (NTP-002)	Acceptance gives an overview of the acceptance techniques and facilities.
Maintenance Philosophy (TAD-100)	The maintenance philosophy, when provided, gives an overview of the considerations designed into the trouble-clearing procedures.
Checklist (CKL-891)	The checklist reflects the volume content (inventory) at any given time, the issue identifier of each data element therein, those data elements revised and/or added, and those data elements deleted from a previous issue.