DATA TERMINAL NUMBERS
DESCRIPTION AND ASSIGNMENT
LOCAL AREA DATA TRANSPORT NETWORK
NETWORK ADMINISTRATION

CONTENTS PAGE

1. GENERAL 2

2. LADT ACCESS ARRANGEMENTS . . 2

NETWORK CONFIGURATION . . 2

CUSTOMER INTERFACE . . . 2

A. Local Subscribers 2

B. Data Service Vendor 2

3. DATA TERMINAL NUMBER STRUCTURE 3

4. APPLICATION OF THE DTN 3

5. DTN ASSIGNMENT CONSIDERATIONS . 4

SCOPE 4

A. Data Central Office Codes . . . 4

B. End Point Numbers 4

RESTRICTIONS 5

6. DTN ASSIGNMENT PROCEDURES . . 5

GUIDELINES 5

A. DSI Access Lines 5

B. Service Vendor Access Lines . . 6

CONTENTS PAGE

PROCEDURES 7

A. DSI Equipped Central Offices . . 7

B. Service Vendor 7

C. Assignment Scenario 8

7. RECENT CHANGE ADMINISTRATION . 8

8. ABBREVIATIONS AND ACRONYMS . . 9

9. REFERENCES 9

Figures

1. LADT Basic Network Architecture 10

2. Dial-Up Access from Central Office With and With-Out a DSI 11

3. Direct Access 12

4. Sample Line Card Equipment Form 13

5. Sample Customer Form 13

6. Sample Customer Service Form 14

Tables

A. DNIC/DTN Configuration 15

NOTICE

This document contains proprietary information that cannot be released outside Bell Communications Research (Bellcore) except to a regional Bell company without written permission of Bellcore.

CONTENTS PAGE

B. Scenario Assignment Applications . . 16

1. GENERAL

1.01 This section provides network administration with guidelines to be used for the assignment of Data Terminal Numbers (DTNs) associated with the Local Area Data Transport (LADT) network. In addition to specific information relative to these assignments, a brief description of the LADT network and its access arrangements are also provided.

1.02 Whenever this section is reissued, the reason(s) for reissue will be listed in this paragraph.

1.03 The title for each figure includes a number(s) in parentheses which identifies the paragraph(s) in which each figure is referenced.

1.04 The terms and specifications in this document relative to LADT are based on LADT Generic 1, Release 1A. Any references to the No. 1 Packet Switching System (PSS) packet switch relate to Version 2.0, Release 2.0.

1.05 It should be noted that the components for service offerings similar to LADT may have different names but perform like functions. This document is generally based on the LADT service offering implemented in the Florida area, which employs AT&T Technologies products.

2. LADT ACCESS ARRANGEMENTS

NETWORK CONFIGURATION

2.01 The LADT system is a network which provides for the transmission of data from local subscribers to one or more service vendors. The system employs packet switching technology to provide the end-to-end communication between the users (local subscribers) and the data vendors.

2.02 Figure 1 provides a sample of the basic architecture of the LADT network. Users access the network via either dial-up or direct access facilities which terminate on an Access Concentrator (AC). The AC employed is an AT&T Technologies Data Subscriber Interface (DSI). The DSI interfaces with an AT&T Technologies No. 1 PSS packet switch via a 56 kb/s facility. The packet switch, using basic No. 1 PSS protocols, acts as a central office to switch the calls to the service vendor(s). The packet switch also interfaces with the administrative processor (AP), which contains programs responsible for the overall LADT network. The packet switch to AP data link is a 9.6 kb/s facility.

CUSTOMER INTERFACE

2.03 Customers for the LADT system are both local subscribers and data service vendors. Each of these types of customers access the system using different modes, as each is connected to a unique component within the network.

A. Local Subscribers

2.04 Local subscribers access a DSI within the LADT network on either a dial-up or direct access basis. For dial-up access, the customer uses both local telephone service and a data terminal to establish a call. This type of call switches through a multiline hunt group (MLHG) in a local central office, and terminates on a dial-up port at a DSI. The DSI may either be within the subscriber's local central office, or the call may be trunked through to a local central office that contains a DSI. In the DSI, each termination of the MLHG is assigned a physical and a logical address, called a multiplexor physical (MUXP) port and a multiplexor logical (MUXL) port. In addition, one DTN is assigned for the set of dial-up ports in each DSI. Figure 2 provides sample configurations of the 1.2 kb/s LADT dial-up access.

2.05 Direct access is provided by the use of the data SLC* carrier system multiplexing devices. These devices, located at both the subscriber's local central office in which a DSI must be housed and at the customer's premise, allow for the transmission of voice and data simultaneously. The subscriber has constant, direct access to a DSI without using the local central office circuit switching equipment. This 4.8 kb/s data link is assigned an MUXP, an MUXL, and a DTN. A sample configuration for direct access service is provided in Fig. 3.

B. Data Service Vendor

2.06 The data service vendor accesses the network via a 9.6 or 56 kb/s Digital Data System (DDS) facility. This facility is terminated directly on the packet switch, and requires the assignment of a Facility Interface Processor (FIP) and a DTN. The DTN

*Trademark of AT&T Technologies, Inc.

assignments are based on the configuration of the customer's access lines. The data service vendor may subscribe to a single access line with a single address (DTN), or may subscribe to one of several other arrangements, including a multi-address hunt group with individual line addressing. Each of the options available to the data service vendor is described in paragraphs 6.12 through 6.16.

3. DATA TERMINAL NUMBER STRUCTURE

3.01 The DTN associated with the LADT network has been designed as specified by the Consultative Committee on International Telephone and Telegraph (CCITT) recommendation X.121 "International Numbering Plan for Public Networks". This plan requires the 10-digit DTN to be prefixed by a 4 digit Data Network Identification Code (DNIC). The DNIC is provided by the Network Routing coordinator. This provides for an adequate numbering scheme that will meet future needs as the LADT system evolves into a national network. The National Network will be composed of groups of local networks that are interconnected by packet Network Interexchange Carriers (IEC). Only one DNIC will be provided for each LADT network.

3.02 Table A provides an illustration of the DNIC and the associated DTN configuration. As can be seen from this table, the DTN bears a significant resemblance to a telephone number for the voice network, where a 3-digit Numbering Plan Area (NPA) code precedes a 7-digit number. However, the DTN has no physical relationship to the voice network, and must be administered specifically for data assignments.

3.03 The 10-digit DTN is subdivided into three parts:

- Data Numbering Plan Area (DNPA) Code
- Data Central Office (DCO) Code
- End Point Number (EPN).

3.04 The DNPA code can also be referred to as the serving region (SR). This code is a 3-digit number that equates to the NPA code for the direct distance dialing (DDD) network in which the LADT service is offered. The DNPA(s) is already established; it need not be assigned or inventoried at the time of subscription to the LADT network.

3.05 The DCO code can also be referred to as the serving area (SA). This code is a 3-digit number which equates to a central office code or prefix. The prefix can be identified as the NXX, where "N" equals digits 2 through 9, and "X" equals digits 0 through 9. This portion of the DTN should be assigned at the time a DSI is installed and turned up for service in a local central office.

3.06 The EPN refers to a specific station number within the LADT network. The EPN represents the last four digits of the DTN, and must be assigned and inventoried along with the DCO on a per service basis.

3.07 Although the stability of DTNs could be basically the same as numbers assigned for POTS, assignment considerations and restrictions vary dramatically for the DTNs. Part 5 of this section provides information relative to assignment considerations and restrictions of the DCO(s) and the EPN(s) of the DTNs.

4. APPLICATION OF THE DTN

4.01 The DTN represents a number used on a public-access nonvoice packet switching network. It can be considered the same as a telephone number is to the voice network, but is required on more than an individual subscriber basis. The DTNs must be assigned for the:

- Individual Direct Access Subscribers
- Individual Data Service Vendors
- Dial-Up MLHG per DSI
- Individual DSIs.

4.02 During the early application of LADT, the DTN will be used for the identification and billing of those direct-access subscribers who, through the use of data SLC carrier system devices, are able to establish a direct connection to a DSI. Additionally, the DTN will provide for the routing of calls from terminals to the data base of the service vendor(s). The DTN provides destination addresses for these intranetwork calls, and is sometimes referred to as the logical network address (LNA). As the LADT system evolves, the DTN will be used for the routing of terminal to terminal and data base to terminal traffic.

4.03 Each group of dial-up access ports on a DSI requires the assignment of a DTN. In this case, the DTN is used for call set-up procedures associated with the dial-up access lines. One and only one DTN is assigned for each group of dial-up access ports on a DSI. In addition, the EPN assigned must be unique within the set assigned to the DSI to packet switch access line (refer to paragraphs 6.06 through 6.08). The EPN for the group of dial-up ports for the DSI is XX01 (XX is variable).

4.04 Each Generic 1, Release 1A DSI within the LADT network is assigned a DTN that is internal to the system. The DTN assigned for the DSI is used when internal transactions are sent through the network to the DSI. Only one DTN is assigned for each DSI, and the EPN assigned must be unique within the set assigned to the DSI to packet switch access line (refer to paragraph 6.06 through 6.08). The value for the DSI EPN is XX00 (XX is variable).

5. DTN ASSIGNMENT CONSIDERATIONS

SCOPE

A. Data Central Office Codes

5.01 The DCO code, or SA, of the DTN is the prefix of the DTN. A single DNPA-DCO (SR-SA) combination specifically identifies only one packet switch. However, a particular packet switch may be assigned more than one DNPA-DCO. This allows for a variation of assignment schemes which include:

(a) Assigning all DSI and service vendor lines the same DCO code for a single packet switch within the serving region (DNPA)

(b) Assigning each DSI and each service vendor access line a DNPA-DCO code unique to the individual line

(c) Some combination of the above.

5.02 Although a wide range of DCO assignment schemes are available, some consideration should be given to the overall administration of the assignments and the impact on future growth of the network. The following limitations should be taken into account when determining the assignment process:

(a) The addition of a second packet switch to the network will require the rehome of all access lines with the same DNPA-DCO codes. When only one DNPA-DCO code is assigned to a packet switch for all access lines (subscriber and service vendor), this rehome would also require a number change for some involved customers.

(b) If each DSI and service vendor access line is assigned its own unique DNPA-DCO, code and a growth DSI or new service vendor is added, a new DNPA-DCO code must be opened. Also, a substantial number of routing changes must be made in every packet switch in the LADT network.

5.03 The most viable alternative in the DCO code assignment process is to assign a packet switch with multiple DCO codes. This can be accomplished by selecting an existing central office code in each central office which houses a DSI, and using a portion of the numbers associated with this code for all the DSI access lines for the central office. The DCO codes for the service vendor should be assigned from a central office code in the wire center where the service vendor's billing telephone number is, regardless of whether a DSI exists in that particular wire center or not.

5.04 The assignment of multiple DCO codes for a packet switch will provide flexibility for growth while minimizing the number of routing changes that would be required at the installation of new DSIs. This assignment process will also permit DSI and service vendor access lines to be rehomed to a new packet switch without the requirement of a number change.

B. End Point Numbers

5.05 The EPN of a DTN is the last four digits of the number. In offices that expect assignments of more than one DSI and/or service vendor within the same serving area (DCO), the EPNs within the central office should not be assigned in numerical order across all types of access lines (DSI and service vendor).

5.06 The separation of the EPNs is useful not only in the administration of EPNs, but also provides allowances for the following operations to be performed:

- Expansion of the EPN address range for the DSI access lines
- Expansion of the EPN address range for service vendor access lines
- Assignment of a growth DSI within a wire center.

5.07 If the EPNs are segregated during the initial assignment processes, these operations can then be performed without requiring the reallocation of EPNs and/or the rearrangement of terminal and vendor lines. In addition, the possibility of number changes can also be avoided.

5.08 The EPNs can be segregated by reserving a sufficient surplus of numbers between those EPNs that will be assigned for the DSI access lines and those EPNs that will be used for service vendor assignments. This break in the number of EPNs available for assignment will provide consideration for those service vendors that may want to increase address space. It will also allow for the EPNs of growth DSIs to be within the same thousands group as the initial DSI in a wire center.

RESTRICTIONS

5.09 The No. 1 PSS packet switch used in the LADT network contains restrictions on the assignment of the DTNs for any access line interfacing with the packet switch. Within the LADT network, these access lines include the 56 kb/s facility between each DSI and the packet switch and the 9.6 or 56 kb/s service vendor access line(s). The restrictions pertain to the actual numbering schemes of the EPNs of the DTN(s). For the No. 1 PSS Release 2 and Release 3 packet switch, EPNs for the multiple addressing scheme must:

- Be assigned in blocks of 100, up to 1000 numbers
- Be assigned in numerical order not only within each hundreds group but also, up to the 1000 numbers, ie, hundreds groups must also be consecutive (not disjoint)
- Consist of all values in the range of XX00 to XX99.

5.10 The three types of DTN assignments made for each DSI (dedicated access lines, the DTN for the group of dial-up ports, and the internal DSI DTN) must be unique numbers within the set of the hundreds groups(s) assigned to the DSI to packet switch connection. The first EPN within each hundreds group must be X000 or XX00. Examples of blocks of 100 DTNs are NXX-0000 to 0099, and NXX-0700 to 0799. An example of a block of 1000 DTNs (10 groups of 100 contiguous numbers) is NXX-0800 to 1799. In addition, these same restrictions apply to some access arrangements for service vendor lines as provided in Part 6 of this section.

Based on the type and amount of restrictions on the DTN assignments, there should be no attempts made to provide a similarity between a customer's DTN and the telephone number for the voice network.

6. DTN ASSIGNMENT PROCEDURES

GUIDELINES

6.01 The assignment of DTNs for the LADT network encompasses the allocation of DCO codes and EPNs. These numbers are similar to the prefix or NXX of the telephone number and the last four digits, respectively in the voice network.

6.02 Specific NXXs apportioned to the data network should be the same as at least one main DDD central office code at the location(s) (wire centers) where the DSI and service vendor access lines are installed. Additionally, the stringent numbering constraints for EPNs require the EPNs to be allocated from a full range of available numbers. There should be no additional restrictions imposed by allocating groups of numbers that are working or unused in the DDD network.

6.03 Since the provisioning of subscriber access lines and service vendor access differ, specific guidelines for each type of customer will be addressed separately.

A. DSI Access Lines

6.04 When fully equipped with dial-up line cards, a DSI provides a maximum of 124 assignable terminal access lines, ie, 31 dial-up line cards multiplied by 4 ports per card, (slot 0 is used for the test access circuit and therefore not available for subscriber access).

6.05 Direct access lines require data SLC carrier system devices to provide dedicated subscriber access to the DSI. Line cards associated with direct access service currently support a maximum of three ports per line card. Each port provides direct access service to only one subscriber. Therefore, each direct access port will require the assignment of a DTN. Initially, the total requirement for these DTNs will be the total number of data SLC carrier system line cards multiplied by three ports per card.

6.06 To provide subscriber access to the DSI, three different types of DTN assignments must be made:

- One DTN that is associated with the DSI for internal use
- One DTN that is associated with the group of dial-up ports
- A group of at least 100 contiguous DTNs available for direct access assignments.

6.07 The allocation of certain groups of DCO codes and associated EPNs for the DSI DTN assignments, should encompass at least two consecutive hundreds groups within a DNPA-DCO (SR-SA). This allows for a sufficient inventory of DTNs for reassignment and aging within a given DSI. Additionally, the allocation of at least 200 contiguous DTNs permits the assignment of the same DNPA-DCO code to multiple DSIs within a single wire center.

6.08 When actual DTN assignments are made for the DSI, the lowest number in the block of 200 numbers should be assigned to the DSI for its internal address. The next lowest number should be assigned as the billing number default of the dial-up MLHG. The remaining 198 numbers can be used for direct access assignments. When reassigning DTNs, consideration should be given to aging. It is recommended that DTNs be aged for one year before being reassigned.

B. Service Vendor Access Lines

6.09 A data service vendor is connected to the LADT network by a 9.6 or 56 kb/s data link to the packet switch. Each data link provides a group of logical channels over which data is passed to and from dial-up and direct access subscribers and the host access lines. The number of logical channels available for each vendor access line is negotiable with the vendor and contingent upon engineering specifications.

6.10 The DTNs for service vendor access lines will be allocated and assigned in the same wire centers in which the vendors' billing telephone numbers for the voice network are provided. Since the assignment of the service vendor's DTN is not dependent on whether a DSI is installed in the local central office, provisioning for these DTNs should be established in all central offices.

6.11 Assignment considerations require the separation of available DTNs for local access subscribers from those for service vendors. Therefore, DTNs for central offices in which DSIs are installed should be administered on an individual group (subscriber versus service vendor) basis. Maintain a break in the numbering sequence allocated to these two types of customers. For example, if the block of 200 numbers to be used for DSI assignments is 7400 to 7599, then the numbers used for service vendors should not begin at 7600, as there would not be a break in the sequence.

6.12 As a No. 1 PSS Release 2 or 3 packet switch user, the service vendor may require any one of six different access arrangements. Each of the following addressing options requires selective treatment in the allocation of assignable DTNs:

(a) Single address

(b) Multiple addresses

(c) Single address hunt group

(d) Single address hunt group with individual line addressing

(e) Multiple address hunt group

(f) Multiple address hunt group with individual line addressing.

6.13 The single address option is the service vendor subscribing to a single access line. The relationship of the access line to the DTN is one for one.

6.14 In a multiple address arrangement, the service vendor opts for a single access line with multiple DTNs (addresses). The restrictions that require observance for the assignment of multiple DTNs to a single access line are the same restrictions identified in paragraph 5.09, in that:

(a) Assignments must be made in blocks of 100, up to 1000 numbers

(b) Assignments must be contiguous hundreds groups, up to the 1000 numbers

(c) EPN assignments consist of all values with a range of XX00 to XX99.

6.15 In a single address hunt group arrangement, the service vendor is assigned a single DTN to be associated with up to 20 additional access lines. The customer may, subsequently request an option for individual line addressing. With the single address hunt group, a unique DTN is required for identifying hunt group member access lines for provisioning purposes and for the optional individual line addressing features. The 20 EPNs following the initial EPN assignment are internally reserved by the No. 1 PSS packet switch. These EPNs may be assigned in any order to the member access lines of the hunt group. The initial EPN assignment may be any number except EPNs 9980 through 9999.

6.16 A multiple address hunt group arrangement consists of more than one access line with multiple DTNs. The assignment restrictions are the same as the multiple access arrangement. With the multiple address hunt group, a unique DTN is required for identifying hunt group member access lines for provisioning purposes and for the individual line addressing feature. The 20 EPNs preceding the low EPN in the block of addresses assigned to the hunt group are internally reserved by the No. 1 PSS packet switch. These EPNs may be assigned in any order to the member access lines of the hunt group. The only additional restriction is that the low EPN of the group may not be 0000.

PROCEDURES

A. DSI Equipped Central Offices

6.17 For DSI equipped central offices, the following procedures should be implemented by the line and number administrator to provide subscriber access DTNs:

(1) Identify the NXX code of the voice network which will be used for the data network assignments of the DCO code. Consideration should be given to the restrictions provided in Part 5 of this section, where:

- A DSI may be assigned only one DNPA-DCO code (SR-SA)
- A block of at least 200 contiguous numbers is available
- The first number within the range of 200 will provide an EPN of X000 or XX00
- A sufficient lapse in the numbering plan can be provided to segregate subscriber access DTNs from service vendor DTNs.

(2) Assign the DTN to be associated internally with the DSI.

(3) Assign the DTN to be used for the group of dial-up ports.

(4) Coordinate direct access DTN assignments in accordance with local procedures.

(5) Maintain an administrative spare of DTNs.

(6) Age direct access DTN assignments.

(7) Administer a manual or mechanized (ie, Computer System for Mainframe Operations [COSMOS]) inventory of spare, assigned, and working DTNs.

(8) Administer an association inventory of working DTNs and their network assignments of the MUXPs and the MUXLs.

(9) Provide Central Office Maintenance and other work groups with support information as dictated by local procedures.

B. Service Vendor

6.18 Any local central office that is not equipped with a DSI may be required to provide DTNs for data service vendors. The line and number administrator should:

(1) Identify the NXX code of the voice network which will be used for the data network assignments of the DCO code. Considerations should be given to the restrictions and guidelines provided in Parts 5 and 6 of this section.

(2) Coordinate service vendor assignments in accordance with local procedures.

(3) Maintain an administrative spare of DTNs.

(4) Age service vendor DTN assignments.

(5) Administer a manual or mechanized inventory of spare, assigned, and working DTNs.

(6) Provide Central Office Maintenance and other work groups with support information as dictated by local procedures.

C. Assignment Scenario

6.19 Table B provides an example of the DTN assignment process. The assumptions are:

(1) Assume that there is a single packet switch that will provide data transport services for a local serving area comprised of three different central offices. Of the three central offices, only two will house DSIs. The offices and their respective existing NXXs are:

- Office A = 221, 223, 225 (DSI is installed)
- Office B = 377, 378 (no DSI installed)
- Office C = 761, 764, 768 (DSI is installed).

(2) Additionally, there are two data service vendors currently requesting subscription to the LADT network. Service vendor number 1 is currently served by office B. Local service for service vendor number 2 is provided by office C.

(3) Prior to the actual assignment of DTNs, a determination of DCO codes must be made in each of the central offices. Based on current and future requirements, the following existing NXXs have been selected in each office:

- Office A = DCO 225
- Office B = DCO 377
- Office C = DCO 768.

6.20 Once the DCO code has been determined for a given central office, the DTN assignments can be made in accordance with the guidelines. Since the DTN requirements vary for each office in the scenario, assignments for each office are examined on an individual basis. Table B provides a detailed account of the required assignments tasks, and the applications of these tasks to offices A, B, and C.

7. RECENT CHANGE ADMINISTRATION

7.01 The service provisioning of an access line requires an update in recent change to reflect the status of the line and also the DTN. The DTNs are found in the recent change data base associated with the AP, as well as in that of the No. 1 PSS packet switch. Both data bases must be updated in order to provide service to the access line(s).

7.02 The line and number work group is responsible for the AP recent change data base. The translations work group is responsible for the accuracy of recent change operations associated with the packet switch. Recent change transactions are performed through interaction with the On-Line Data Integrity (ODIN) system for both the AP and the packet switch.

7.03 The AP recent change DTN assignments can be validated through inquiry using the Line Card Equipment Form. Once this form is selected from the system menu, the user should use the "r" (review) processing mode. The two key fields on this form are DSI and CARD(-LINE). This requires knowledge of the assigned MUXP and MUXL. (The remaining fields on this form are mostly read only fields). The system will respond with a completed form, from which the user can check the assigned DTN(s). A sample Line Card Equipment Form is provided in Fig. 4. The user may, select the Customer Form from the menu. However, as the key inputs for this form are the DSI and the EPN, this form presents information for only one EPN at a time. The DTNs assigned to hunt groups would each require an inquiry. Figure 5 provides a sample of the Customer Form. The LADT Input/Output Manual provides additional information on these forms, as well as the method to access a Customer Data Link Form for access line information on a per DSI basis.

7.04 The packet switch recent change DTN assignments can be validated through inquiry on the packet switch recent change terminal. Once the data base has been accessed, a Customer Service Form can be selected from the menu. This form can be reviewed using the "r" (review) processing mode. This form is split into two displays which will appear on the screen separately. The first half of the form provides the SR-SA and EPN of the access line, and also provides the last EPN for those hunt group configurations. The second screen provides details for each line of the hunt group, including the EPN. Figure 6 provides a sample of the Customer Service Form. The Transport Network (TNET) Input/Output Manual provides additional access information and forms descriptions.

8. ABBREVIATIONS AND ACRONYMS

8.01 Abbreviations and acronyms used in this section are defined below:

TERM	DEFINITION
AP	Administrative Processor
CCITT	Consultative Committee on International Telephone and Telegraph
COSMOS	Computer System for Mainframe Operations
DCO	Data Central Office
DDD	Direct Distance Dialing
DDS	Digital Data System
DNIC	Data Network Identification Code
DNPA	Data Numbering Plan Area
DSI	Data Subscriber Interface
DTN	Data Terminal Number
EPN	End Point Number
FIP	Facility Interface Processor
IEC	Interexchange Carrier
LADT	Local Area Data Transport
LNA	Logical Network Address
MLHG	Multiline Hunt Group
MUXL	Multiplexor Logical Port
MUXP	Multiplexor Physical Port
NPA	Number Planning Area
ODIN	On-Line Data Integrity
PSS	Packet Switching System
SA	Serving Area
SR	Serving Region
TNET	Transport Network

9. REFERENCES

9.01 The following sections should be used as references for additional information:

SECTION	TITLE
255-025-005	General Description—Local Area Data Transport Network
255-025-020	Local Area Data Transport System Administration
255-025-021	Data Subscriber Interface—Description and Line Assignment
255-025-023	Packet Switch Assignment Guidelines
255-025-040	Local Area Data Transport Network—Traffic and Performance Measurements
255-025-041	Packet Switch Measurements Description
255-093-010	Feature Document—No. 1 Packet Switching System Description
255-093-510	Feature Document—Data Subscriber Interface—LDAT Network

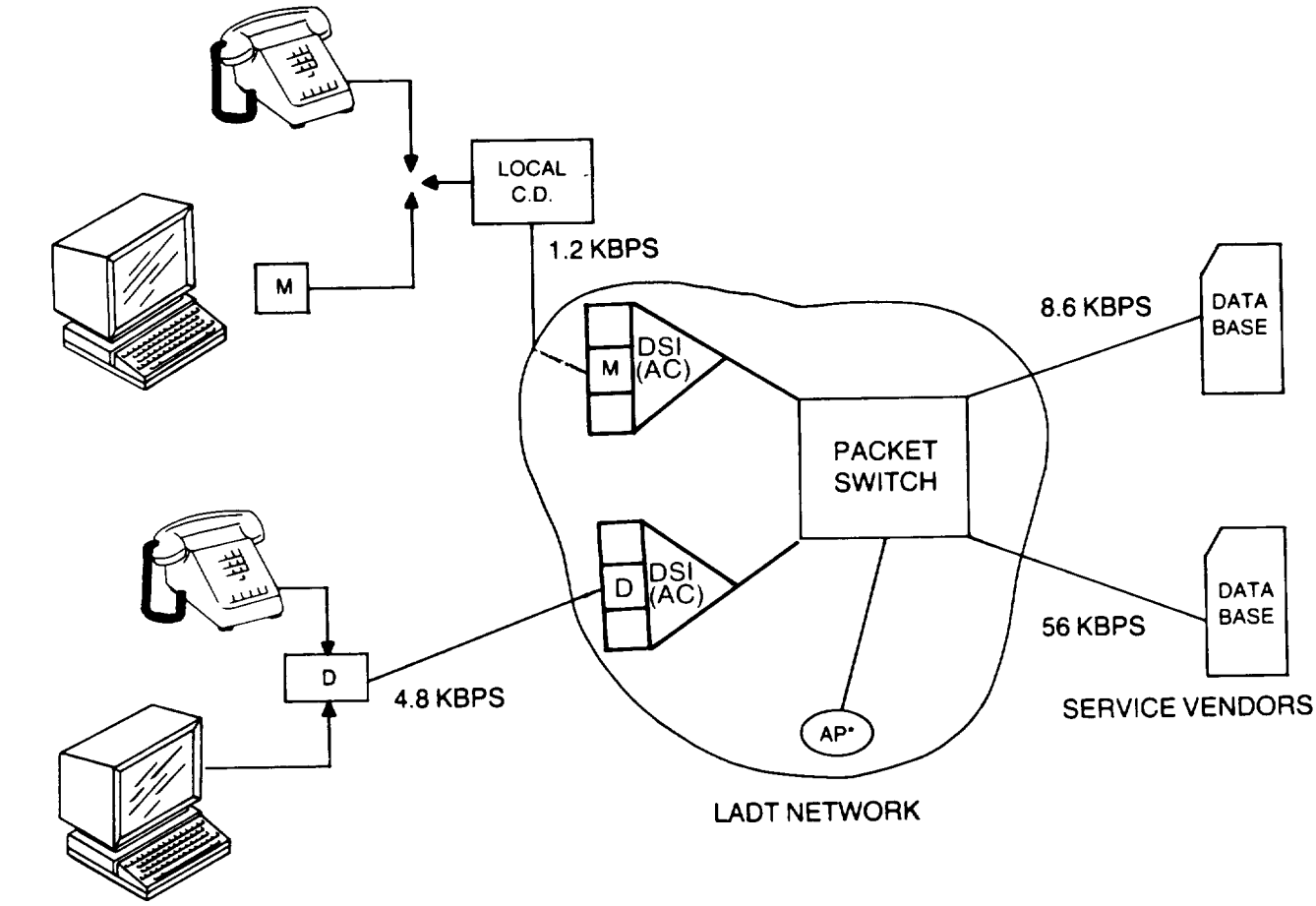

LEGEND:
M = MODEM
D = DATA SLC CARRIER SYSTEM DEVICE
* = FLORIDA APPLICATIONS ONLY

Fig. 1—LADT Basic Network Architecture (2.02)

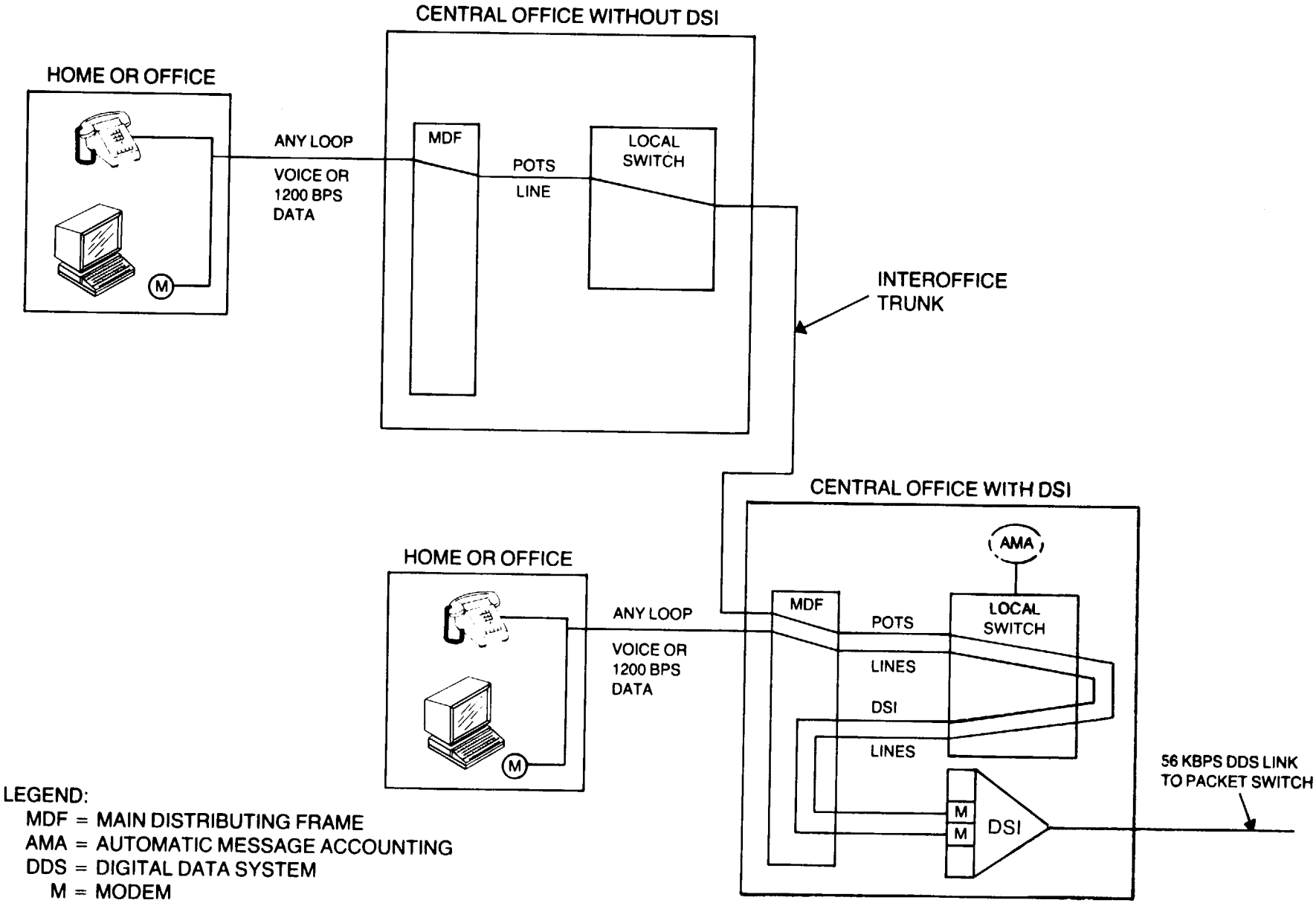

Fig. 2—Dial-Up Access from Central Office With and With-Out a DSI (2.04

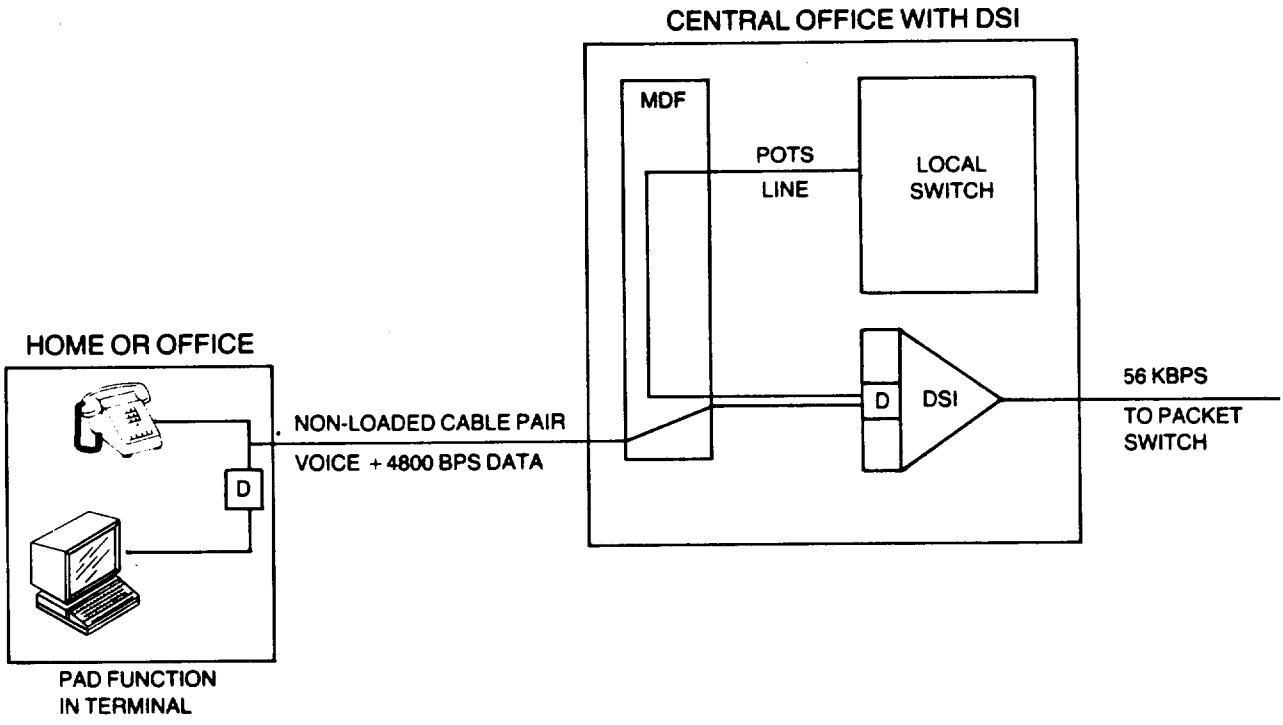

LEGEND:
D = DATA SLC CARRIER SYSTEM DEVICE
MDF = MAIN DISTRIBUTING FRAME

Fig. 3—Direct Access (2.05)

```
                    LINE CARD EQUIPMENT FORM

   *1. DSI: __    *2. CARD (-LINE): ____    3. GROUP: _
    4. DSI STATUS: ___          5. GROUP STATUS: ___
    6. SERVING REGION: ___      7. SERVING AREA: ___
    8. DIALUP EPN: ____         9. UPD TYPE: _____
  10. CARD STATUS: ___    11. CARD TYPE: ______    12. CARD SPEED: ____
            13. LINE  15. STATUS  16. EPN  17. HUNTGRP
       [1]   _____     _____     _____     _____
       [2]   _____     _____     _____     _____
       [3]   _____     _____     _____     _____
       [4]   _____     _____     _____     _____
```

Fig. 4—Sample Line Card Equipment Form (7.03)

```
                        CUSTOMER FORM

   *1. DSI: __              *2. EPN: ____          3. UPD TYPE: _____
    4. SERVICE REGION: ___  5. SERVICE AREA: ___   6. CARD: __
                            7. LINE: ___
```

Fig. 5—Sample Customer Form (7.03)

Customer Service Form

(1)LNA:(2)SRSA Group:_____ (3)EPN:____ (4)Last EPN:____ (5)Facility Id:___
(6)Spec Addr:___ (7)FIP Number:__ (8)FIP Slot:_
(9)Access Line State:_____ (10)Line Speed:___
(11)Flow Control Nego:__ (12)Throughput Nego:__ (13)Fast Select Accept:____
(14)Level 2 Window Size:__ (15)Subnetwork ID___
(16)Outgoing Calls Barred:__ (17)Incoming Calls Barred:___
(18)Maximum Number of Channels:___ (19)Max PVC Channels:___
(20)Two Way Channel Range:____ To___ (23)One Way Channel Range:___ To___
(26)Closed User Group List
(27)International Closed User Group Number ID

___
___
___
___
___
___
___
___
___
___

The second screen of the form will appear on the screen as follows:

(29)EPN	(30)FID	(31)FIP	(32)FIP Slot	(33)Window	(34) Line State
___	___	___	_	_	_____
___	___	___	_	_	_____
___	___	___	_	_	_____
___	___	___	_	_	_____
___	___	___	_	_	_____
___	___	___	_	_	_____
___	___	___	_	_	_____
___	___	___	_	_	_____
___	___	___	_	_	_____
___	___	___	_	_	_____
___	___	___	_	_	_____
___	___	___	_	_	_____
___	___	___	_	_	_____
___	___	___	_	_	_____
___	___	___	_	_	_____
___	___	___	_	_	_____
___	___	___	_	_	_____
___	___	___	_	_	_____
___	___	___	_	_	_____

Fig. 6—Sample Customer Service Form (7.04)

TABLE A

DNIC/DNT CONFIGURATION

CODE		DESCRIPTION	DIGITS	LEGEND	LOCAL ASSIGNMENT
DNIC		Data Network Identification Code	ZXXX	Z = 2 thru 9 X = 0 thru 9	NO
DTN	DPNA	Data Numbering Plan Area Code	NXX	N = 2 thru 9 X = 0 thru 9	NO
	DCO	Data Central Office Code	NXX	N = 2 thru 9 X = 0 thru 9	YES
	EPN	End Point Number	XXXX	X = 0 thru 9	YES

TABLE B
SCENARIO ASSIGNMENT APPLICATIONS

TASK	APPLICATIONS		
	OFFICE A	OFFICE B	OFFICE C
1. Determine the DCO code to be assigned to the LADT network.	225	377	768
2. Is there a DSI installed in the office?	Yes	No	Yes
3. Dedicate a block of at least 100 contiguous EPNs for DSI assignments (200 is recommended).	-2400 to -2599	Not required	-3000 to -3199
4. Make the following DSI DTN assignments:			
(a) Address for the DSI for internal use	225-2400	Not required	768-3000
(b) Default address for the group of dial-up ports	225-2401		768-3001
(c) Individual direct access as requests for service occur.	DTNs from 225-2402 to 225-2599		DTNs from 768-3002 to 768-3199
5. Is there a request for service from a service vendor whose local telephone service is provided by this office? (If no, this is the last task required for assignments. Administration of assignments, i.e., recent change, inventories, etc., must be accomplished.)	No	yes	yes

TABLE B
SCENARIO ASSIGNMENT APPLICATIONS

TASK	APPLICATIONS		
	OFFICE A	OFFICE B	OFFICE C
6. If yes to item 5, determine which of the six options the service vendor has requested. (The number in parenthesis indicates the maximum number of number of DTNs that would be required if the option was requested to the fullest extent.) (a) Single Address (1) (b) Multiple Address (up to 1000) (c) Single address hunt group (1, but reserve next 20 consecutive EPNs) (d) Single address hunt group individual line addressing (21) (e) Multi-address hunt group (1000, but reserve preceding 20 EPNs) (f) Multi-address hunt group with individual line addressing (up to 1020)	Not required	Service Vendor 1	Service Vendor 2
7. Determine the maximum number of DTN assignments required, based on the service vendor's option	Not Applicable	1	1020
8. If a DSI is installed in the office, segregate		377-1424	768-5400 to 768-6399 for

TABLE B
SCENARIO ASSIGNMENT APPLICATIONS

TASK	APPLICATIONS		
	OFFICE A	OFFICE B	OFFICE C
the required EPN assignments for the DSI. For example, use EPNs in a different group of 1000 numbers, but within the same DCO. Follow assignment restrictions specified in paragraphs 6.13 through 6.18, whether DSI is installed or not.			the 1000 contiguous EPNs 768-5380 to 768-5399 for the 20 EPNs preceding 768-5400