297-8001-350

DMS-100 Family

North American DMS-100

Translations Guide Volume 14 of 20

Meridian Digital Centrex (MDC) Part 4 of 6

LEC0015 and up Standard 14.02 May 2001

NORTEL NETWORKS™

DMS-100 Family

North American DMS-100

Translations Guide Volume 14 of 20

Meridian Digital Centrex (MDC) Part 4 of 6

Publication number: 297-8001-350
Product release: LEC0015 and up
Document release: Standard 14.02
Date: May 2001

Copyright © 1996-2001 Nortel Networks,
All Rights Reserved

Printed in the United States of America

NORTEL NETWORKS CONFIDENTIAL: The information contained herein is the property of Nortel Networks and is strictly confidential. Except as expressly authorized in writing by Nortel Networks, the holder shall keep all information contained herein confidential, shall disclose the information only to its employees with a need to know, and shall protect the information, in whole or in part, from disclosure and dissemination to third parties with the same degree of care it uses to protect its own confidential information, but with no less than reasonable care. Except as expressly authorized in writing by Nortel Networks, the holder is granted no rights to use the information contained herein.

Information is subject to change without notice. Nortel Networks reserves the right to make changes in design or components as progress in engineering and manufacturing may warrant. Changes or modification to the DMS-100 without the express consent of Nortel Networks may void its warranty and void the user's authority to operate the equipment.

Nortel Networks, the Nortel Networks logo, the Globemark, How the World Shares Ideas, Unified Networks, DMS, DMS-100, Helmsman, MAP, Meridian, Nortel, Northern Telecom, NT, and SuperNode are trademarks of Nortel Networks.

Contents

Translations Guide Volume 14 of 20
Meridian Digital Centrex (MDC) Part 4 of 6

Multi-Volume Topic Contents vii

NTP Summary Contents xxiii

1 Datafilling MDC MBG Standard (continued) 1-1
RLT with No Third Party Interaction-Canada only 1-2
TCAP calling name delivery for MDC 1-13
Virtual Access to Private Networks 1-39

2 Datafilling MDC MBS Minimum 2-1
Automatic Line and MADN 2-2
Business Set Busy Indicator 2-8
Business Set Call Waiting Originate 2-17
Business Set Dial Call Waiting 2-25
Call Forward/Automatic Dial Display 2-38
EBS as a Message Center 2-41
EBS as a Message Center - Enhancements 2-47
Enhanced EBS Reason Display 2-63
Executive Msg Service Enhancement - Multi EMW per DN 2-91
M5209 Introduction 2-96
MADN Service Orders 2-111
MBS II Templates 2-119
MBS Auto Answer Back 2-130
MBS Automatic Dial 2-136
MBS Automatic Line 2-143
MBS Busy Override 2-148
MBS Call Back Queuing 2-160
MBS Call Forward All Calls Feature Key S/W 2-177
MBS Call Park 2-189
MBS Call Pickup Feature Key S/W 2-209
MBS Call Waiting 2-218
MBS Display Called Number 2-226
MBS Display Calling Number 2-233
MBS End to End Signalling 2-241

MBS Feature Code Access 2-243
MBS Feature Display 2-248
MBS Group Intercom 2-257
MBS Held Calls 2-265
MBS Individual Business Line 2-267
MBS Intercom 2-280
MBS Listen on Hold 2-287
MBS MADN SCA/MCA (across Switch) 2-289
MBS Make Set Busy 2-297
MBS Malicious Call Hold 2-307
MBS Onhook Dialing 2-314
MBS Privacy Release (across Switch) 2-316
MBS Query Time Key 2-328
MBS Ring-Again Feature Key S/W 2-333
MBS Speed Calling Feature Key S/W 2-341
MBS Three-Way Calling Transfer 2-355
MDC Circuit Test Enhancement 2-361
Message Service - Leave Message 2-376
Message Service - List Management 2-392
SERVORD cleanup for MBS 2-403
Short Hunt on MBS 2-415

3 Datafilling MDC MBS Standard 3-1

Call Park Recall Identification 3-2
CFW for MADN Secondary Members 3-17
EBS Call Forwarding on a per Key Basis 3-26
Enhanced MADN Call Control 3-54
Group Intercom All Call 3-90
Individual Page from GIC 3-101
Last Number Redial from Set 3-110
MADN Bridging - 3 Way Call 3-117
MADN Cut-off on Disconnect (COD) 3-121
MADN Ring Forward 3-136
Make Set Busy Except GIC 3-148
Music on Hold for EBS 3-160
Name Display for MADN Members 3-179
Originating/Terminating Line Select (TLS) 3-194
Repeated Alert for MBS 3-205
Specific Key Ringback on Ring Again Request on EBS 3-212

4 Datafilling MDC PRO 4-1

ARS default public network routing 4-2
Authcode for MDR 4-12
Bellcore AMA Enhanced ARS Translations 4-17
BOC AMA Call Code 032 4-30
CCSA Line Option 4-34
Customer Administration of Data 4-38
Customer Dialed Account Recording (CDAR) 4-56
Customer Network Data Changes 4-68

Customer Screening at the Trunk Test Position 4-87
Customer Service Change Via SERVORD 4-93
Direct Inward Dialing (DID) 4-107

Multi-Volume Topic Contents

Translations Guide Volume 11 of 20
Meridian Digital Centrex (MDC) Part 1 of 6

NTP Summary Contents **xxiii**

1 Introduction to Meridian Digital Centrex **Vol. 11, 1-1**

Understanding Meridian Digital Centrex translations Vol. 11, 1-1
- MDC overview Vol. 11, 1-1
- Feature compatibility Vol. 11, 1-1
- Line class code compatibility Vol. 11, 1-2
- Planning a new customer group Vol. 11, 1-2
- Switching unit parameters Vol. 11, 1-4

Preparing to datafill Meridian Digital Centrex Vol. 11, 1-6
- Customer group datafill Vol. 11, 1-6
- Translation and routing datafill Vol. 11, 1-10
- Line datafill Vol. 11, 1-14
- Attendant console datafill Vol. 11, 1-18
- MDC engineering limits Vol. 11, 1-23

Functional groups for Meridian Digital Centrex Vol. 11, 1-35
- MDC Minimum, MDC00001 Vol. 11, 1-35
- MDC MSAC, MDC00002 Vol. 11, 1-35
- MDC Standard, MDC00003 Vol. 11, 1-35
- MDC CLASS on MDC, MDC00004 Vol. 11, 1-35
- MDC MBG Minimum, MDC00005 Vol. 11, 1-35
- MDC MBG Standard, MDC00006 Vol. 11, 1-36
- MDC MBS Minimum, MDC00007 Vol. 11, 1-36
- MDC MBS Standard, MDC00008 Vol. 11, 1-36
- MDC PRO, MDC00009 Vol. 11, 1-36
- MDC PVN, MDC00011 Vol. 11, 1-36
- MDC Tailored MDC 1, MDC00012 Vol. 11, 1-36
- MDC Tailored MDC 2, MDC00013 Vol. 11, 1-36
- MDC Tailored MDC 3, MDC00014 Vol. 11, 1-37
- MDC Tailored MDC 4, MDC00015 Vol. 11, 1-37
- MDC Tailored NARS, MDC00016 Vol. 11, 1-37
- MDC Name/DN Blocking, MDC00033 Vol. 11, 1-37

Customer data questionnaire Vol. 11, 1-37

2 Datafilling MDC Minimum Vol. 11, 2-1

2-Way Digital FX Trunk - Business Services Vol. 11, 2-2
3-Way Conference/Transfer Vol. 11, 2-7
3WC Dial 0 for 608 Cord Board Vol. 11, 2-16
3WC/Call Transfer for UCD Vol. 11, 2-22
3WC/CXR to 2500 Set Call Waiting Interactions Vol. 11, 2-30
6 Port Conference Circuit Use Control Vol. 11, 2-34
AC-Extended Calls to CFB/CFD Vol. 11, 2-39
Access to CCSA Vol. 11, 2-43
Access to CO from PBX Vol. 11, 2-50
Access to ETN Vol. 11, 2-57
Access to Special Service Facilities Vol. 11, 2-64
Attendant - Auto Dial Vol. 11, 2-66
Attendant Call Park Recall Timer Vol. 11, 2-72
Attendant Call Selection Vol. 11, 2-77
Attendant Camp-On Vol. 11, 2-80
Attendant Conference Max Six Conferees by end user Vol. 11, 2-89
Attendant Console Call Hold Recall Vol. 11, 2-100
Attendant Console Display Vol. 11, 2-105
Attendant Console End-to-End Signaling Vol. 11, 2-114
Attendant Control of Trunk Group Access Vol. 11, 2-122
Attendant Display of Queued Calls by ICI Key Vol. 11, 2-127
Attendant Locked Loop Operation Vol. 11, 2-136
Attendant Release Upon Completion of Dialing Vol. 11, 2-140
Attendant Speed Calling Vol. 11, 2-144
Attendant to Recorded Announcement Vol. 11, 2-152
Attendant to UCD Vol. 11, 2-154
Attendant Transfer Vol. 11, 2-166
Audio Input on Incoming Calls in Queue Vol. 11, 2-169
Audio Interlude Vol. 11, 2-179
Audio Table Expansion Vol. 11, 2-192
Automatic Intercept System (AIS) Enhancement Vol. 11, 2-196
Automatic Line Vol. 11, 2-216
Automatic Recall Vol. 11, 2-219
Blind Transfer Recall Vol. 11, 2-231
Blind Transfer Recall Identification Vol. 11, 2-244
Busy Verification - Stations Vol. 11, 2-258
Busy Verification - Trunks Vol. 11, 2-269
Call Forward All Calls Vol. 11, 2-283
Call Forward Busy Vol. 11, 2-293
Call Forward Don't Answer Vol. 11, 2-304
Call Forward Don't Answer and Call Waiting Interaction Vol. 11, 2-321
Call Hold Vol. 11, 2-334
Call Park Vol. 11, 2-348
Call Pickup Vol. 11, 2-364
Call Pickup Transparency Vol. 11, 2-373
Call Request Call Processing Enhancements Vol. 11, 2-375
Call Transfer Enhancement Vol. 11, 2-378
Call Waiting Vol. 11, 2-391
Call Waiting for 3-Way Calling Vol. 11, 2-404

Call Waiting - Originating Vol. 11, 2-411
Camp On with Music Vol. 11, 2-422
CFD from Hunt Group Station Vol. 11, 2-432
CFD Interaction with Three-Way Calling Vol. 11, 2-440
CFGDA for Hunt Groups Vol. 11, 2-445
Class of Service Restrictions Vol. 11, 2-455
Code Call Access Vol. 11, 2-461
Code Calling - Line Termination Vol. 11, 2-467
Code Restrictions Vol. 11, 2-477
Conference Join Vol. 11, 2-484
CPU Datafill Enhancements Vol. 11, 2-493
Customer Group Transparency-Canada only Vol. 11, 2-500
Denied Incoming Vol. 11, 2-505
Dial - Call Waiting Vol. 11, 2-517
Dictation Access and Control (DTMF Only) Vol. 11, 2-529
Direct Outward Dialing (DOD) Vol. 11, 2-536
Directed Call Park Vol. 11, 2-541
Directed Call Pickup - Barge In Vol. 11, 2-553
Directed Call Pickup - Non Barge In Vol. 11, 2-563
Distinctive and Ring Again Ringing Vol. 11, 2-571
Distinctive Call Waiting Tones Vol. 11, 2-576
Distinctive Ringing Vol. 11, 2-582
Distinctive Ringing Enhancements Vol. 11, 2-588
DTMF Outpulsing on a Line Vol. 11, 2-606
End-to-End Signaling through Speed Call Vol. 11, 2-618
Executive Right of Way Vol. 11, 2-628
Flexible Console Alerting Vol. 11, 2-638
Flexible Intercept Vol. 11, 2-648
Generalized Distinctive Ringing Vol. 11, 2-651
IBN Call Forward Validation Vol. 11, 2-658
IBN Cancel Call Waiting Vol. 11, 2-668
IBN Feature Activation OMs I Vol. 11, 2-673
IBN LCC Compatibility with FRO Line Option Vol. 11, 2-680
IBN Outpulsing to POTS Trunks Vol. 11, 2-700
IBN Quantity Control (100 Lines) Vol. 11, 2-705
IBNRTE Table Capacity Increase Vol. 11, 2-707
Immediate Answer Reporting for IBN Vol. 11, 2-714
Increase in Number of IBN Customer Groups Vol. 11, 2-717
Increase Number of Equivalent DN Appearances for IBN Vol. 11, 2-721
Interposition Calls and Transfers Vol. 11, 2-726

Translations Guide Volume 12 of 20
Meridian Digital Centrex (MDC) Part 2 of 6

1 Datafilling MDC Minimum (continued) Vol. 12, 1-1
Last Number Redial (LNR) Vol. 12, 1-2
Line Music on Hold Vol. 12, 1-7
Lockout Vol. 12, 1-16

Loudspeaker & Radio Paging access Vol. 12, 1-19
Loudspeaker Paging - Line Termination Vol. 12, 1-25
MADN and Conference Interaction Vol. 12, 1-32
MAP Display for Attendant OM Vol. 12, 1-37
MBS 30-Port Conference Vol. 12, 1-40
MDC CUSTENG Robustness Vol. 12, 1-51
Meet-Me Conference Vol. 12, 1-56
MVP Dial Plan Vol. 12, 1-68
Night Service - Flexible Vol. 12, 1-78
Night Service Trunk Answer from Any Station - Fixed Vol. 12, 1-86
Night Service Trunk Answer from Any Station - TAFAS Vol. 12, 1-93
Optional Answer Supervision from Attendant Queue Vol. 12, 1-101
Override ACR for CFU Vol. 12, 1-107
Patch Source Inclusion I Vol. 12, 1-115
Patch Source Inclusion II Vol. 12, 1-125
Permanent Hold (500/2500 sets) Vol. 12, 1-134
Position Busy Vol. 12, 1-148
Query Functional Station Grouping Vol. 12, 1-152
Ring Again Vol. 12, 1-158
Ring Again Cancellation Timer Vol. 12, 1-167
Ring Again on Hunt Groups Vol. 12, 1-175
Second and Third Delay Announcements Vol. 12, 1-182
Secrecy Vol. 12, 1-193
Semi-restricted Incoming Lines Call Intercept Vol. 12, 1-196
Setting Attendant Recall Timers to Zero Vol. 12, 1-207
Simplified Dialing Vol. 12, 1-211
Sourcing of Patch FPA75 Vol. 12, 1-216
Sourcing Patch JDS54 Vol. 12, 1-224
Sourcing Patches RER26, RER32, and MBR75 Vol. 12, 1-228
Special Intercept Through Service Orders Vol. 12, 1-235
Speed Calling Group - Long List Vol. 12, 1-240
Speed Calling Individual - Short List Vol. 12, 1-245
Station Activated DND with Feature Active Reminder Vol. 12, 1-255
Storing of 24 Dialed Digits Vol. 12, 1-264
TGB/TAC Access thru Special Keys Vol. 12, 1-267
Through Dialing Vol. 12, 1-273
Trouble Key on IBN Console Vol. 12, 1-275
Trunk Busy Verify Tone Vol. 12, 1-282
Two-Way Splitting Vol. 12, 1-292
UCD Night Service Invocation Enhancements Vol. 12, 1-294
UCD Queue Status Lamp Vol. 12, 1-301
Uniform Call Distribution (to 500/2500 Telephone Sets) Vol. 12, 1-310
Uniform Call Distribution from Queue Vol. 12, 1-324
Variable Length/Same Leading Digit(s) Translation Vol. 12, 1-329
Variable Speed Call Access Code Vol. 12, 1-335
Variable Types of Outpulsing on Same Call Vol. 12, 1-350
Wild Card Key Vol. 12, 1-354

2 Datafilling MDC MSAC Vol. 12, 2-1

Attendant Console OM on an Individual Console Basis Vol. 12, 2-2
Do Not Disturb Vol. 12, 2-21
Dynamic Measurements Vol. 12, 2-29
Flexible Display Language Vol. 12, 2-34
Immediate Notification of Priority Enqueued Calls Vol. 12, 2-45
Peg Counts on LDNs on Attendant Consoles Vol. 12, 2-49

3 Datafilling MDC Standard Vol. 12, 3-1

Activate/Deactivate CFU/CFI Functionality Vol. 12, 3-2
AC to IBNISUP Interworking Vol. 12, 3-11
Account Codes Vol. 12, 3-15
ANI Information in SMDR Output Vol. 12, 3-24
Attendant Call Detail Entry Vol. 12, 3-37
Attendant Control of VFG Vol. 12, 3-48
Attendant Message Waiting Vol. 12, 3-57
Attendant Set Up Conference: 10 or More Conferees Vol. 12, 3-70
Authorization Codes Vol. 12, 3-81
Automatic Routing System - (Basic) Vol. 12, 3-85
Call Back Queuing (Basic) Vol. 12, 3-92
Call Forward Busy - Inhibit Make Busy & Inhibit Line Busy Vol. 12, 3-100
Call Forward Busy/Don't Answer - Internal/External Vol. 12, 3-116
Call Forward Don't Answer and Call Waiting Interaction Vol. 12, 3-136
Call Forward Prevention Enhancements Vol. 12, 3-149
Call Forward Timed Vol. 12, 3-178
Call Forwarding of Call Waiting Calls Vol. 12, 3-191
Call Request Call Processing Enhancements Vol. 12, 3-200
Call Request Retrieve/Key Short Hunt Interaction Control Vol. 12, 3-203
Call Waiting 1a Transparency Issues Vol. 12, 3-208
CFBL Inhibit Line Busy/Inhibit MB Enhancements Vol. 12, 3-215
Change EBS Features During Talking State Vol. 12, 3-230
Change Line Class Codes via SERVORD Vol. 12, 3-239
Change Speed Call Controller Vol. 12, 3-265
CLEN for EBS Vol. 12, 3-272
Control of Multiple Call Forwarding Vol. 12, 3-282
Cut-Through Dialing Vol. 12, 3-296
Cut-Through Dialing and Through Dialing Interaction Vol. 12, 3-303
Cut-Through Dialing for IBN Lines and AC Vol. 12, 3-309
Dialtone Passback through PX Trunks for MDC Vol. 12, 3-316
Direct Inward System Access (DISA) Vol. 12, 3-327
DISA - Enhancements Vol. 12, 3-332
DISA - Invalid Authcode Treatment Option Vol. 12, 3-338
DISA - Remove Auth Code Timeout Vol. 12, 3-344
DISA - Third Dial Tone Vol. 12, 3-348
Distinctive Call Waiting Ringback Vol. 12, 3-355
DT after CFW Cancel and Spd Call Programming Vol. 12, 3-369
EAEO - IBN PIC Using SERVORD Vol. 12, 3-374
Enhanced SERVORD II Vol. 12, 3-385
ERWT for Lines, Trunks for ARS, CBQ Features Vol. 12, 3-396

ESN - Answer Supervision Generation Vol. 12, 3-403
ESN - Authorization Codes Vol. 12, 3-409
ESN - Call-Back Queuing Vol. 12, 3-420
ESN - Off-hook Queuing Vol. 12, 3-431
Flexible Station Controlled Conference (500/2500 Sets) Vol. 12, 3-441

Translations Guide Volume 13 of 20
Meridian Digital Centrex (MDC) Part 3 of 6

1 Datafilling MDC Standard (continued) Vol. 13, 1-1

Group Number Feature Control Vol. 13, 1-2
Hunt LOD Expansion Vol. 13, 1-30
IBN Auth Codes for Alternate Route Selection (ARS) Vol. 13, 1-42
IBN Call Forward Enhancements Vol. 13, 1-50
IBN Class 5 INWATS Vol. 13, 1-56
IBN Class 5 Psuedo OUTWATS Vol. 13, 1-63
IBN & ESB Compatibility Vol. 13, 1-72
IBN Optional Call Forward Links Vol. 13, 1-77
IBN Trunks with ISUP Signaling Vol. 13, 1-80
Increase Auth Codes per Customer Group Vol. 13, 1-108
INWATS to Direct Inward System Access Vol. 13, 1-112
MBS Message Waiting Vol. 13, 1-123
MDC Variable CDAR Vol. 13, 1-129
Meet-Me Conference Feature Expansion Vol. 13, 1-149
Meet-Me Page Vol. 13, 1-162
Message Waiting Lamp Update - Link Phone Vol. 13, 1-176
Multiple Position Hunt with Queue Vol. 13, 1-182
Non-Data Link Console Call Extension Vol. 13, 1-210
Off-hook Queuing Vol. 13, 1-219
OHQ, CBQ for OUTWATS VFG Vol. 13, 1-228
Personal Call Screening of Call Forwarding Vol. 13, 1-236
Preset Conference Vol. 13, 1-245
Queuing OMs for each Route Vol. 13, 1-261
Remove Timeout between Authcode/Secondary Dial Tone Vol. 13, 1-276
Restricted Dial Tone Vol. 13, 1-281
Ring Reminder Off/On Option per Line Vol. 13, 1-304
Separate SMDR Output Files by Cust Group Vol. 13, 1-309
SMDR for ONI Lines Vol. 13, 1-319
Station Activation of CFB/CFD Vol. 13, 1-325
Station Message Detail Recording Vol. 13, 1-337
Station Message Waiting Vol. 13, 1-345
Station Specific Auth Codes Vol. 13, 1-355
Station Specific Authcode - CDC Enhancements Vol. 13, 1-364
Stuttered Dial Tone for Message Waiting Vol. 13, 1-372
Supervisory Console (Basic) Vol. 13, 1-378
Suspend and Restore Remote Call Forward Lines Vol. 13, 1-381
Variable Stutter Dial Tone Vol. 13, 1-385
VFG INWATS Ovfl Totals to AMA Tape - IBN Vol. 13, 1-388

VFG Look Ahead Vol. 13, 1-397
VFG Usage Data Vol. 13, 1-404

2 Datafilling MDC CLASS on MDC Vol. 13, 2-1
Calling Name Delivery on MADN (CNAMD on MADN) Vol. 13, 2-2
CLASS on MBS/MADN Base Vol. 13, 2-9
CLASS on MDC Base Vol. 13, 2-28
Class on MVP Base Vol. 13, 2-66
COT Enhancement Vol. 13, 2-76
SLE on MBS/MADN Vol. 13, 2-88
SLE on MDC Vol. 13, 2-106
Teen Service on MDC Vol. 13, 2-125

3 Datafilling MDC MBG Minimum Vol. 13, 3-1
IBN ISUP NETINFO Translations-Canada only Vol. 13, 3-2
ISUP Shared Trunking Enhancement Vol. 13, 3-25
MBG Alternate Terminating Number Billing Vol. 13, 3-45
MBG Enabling of Feature Networking Vol. 13, 3-51
MBG Feature Networking Control Vol. 13, 3-56
MBG II - Support of IBN7 Trunk Features Vol. 13, 3-63
MBG III - Support of Private Numbering Plan Vol. 13, 3-75
MBG IV - Support of Network EMW Vol. 13, 3-110
Multilocation Business Group I Vol. 13, 3-120

4 Datafilling MDC MBG Standard Vol. 13, 4-1
Calling Number and NCOS Display on Attendant Console Vol. 13, 4-2
MBG/IBN ISUP Redirection Enhancements Vol. 13, 4-33
NAS Features Optionality Vol. 13, 4-39
Network Attendant Control Vol. 13, 4-44
Network Attendant Recall Vol. 13, 4-48
Network Camp-On-II Vol. 13, 4-52
Network Dial Plan Display Vol. 13, 4-56
Network Display Enhancement Vol. 13, 4-73
Network Message Waiting Indicator (MWI) Vol. 13, 4-83
Network Name Display Vol. 13, 4-103
Network Name Display for Attendant Consoles Vol. 13, 4-115
Network Wide Ring Again Vol. 13, 4-140
Networked EBS Display Vol. 13, 4-169

Translations Guide Volume 14 of 20
Meridian Digital Centrex (MDC) Part 4 of 6

1 Datafilling MDC MBG Standard (continued) Vol. 14, 1-1
RLT with No Third Party Interaction-Canada only Vol. 14, 1-2
TCAP calling name delivery for MDC Vol. 14, 1-13
Virtual Access to Private Networks Vol. 14, 1-39

2 Datafilling MDC MBS Minimum Vol. 14, 2-1

Automatic Line and MADN Vol. 14, 2-2
Business Set Busy Indicator Vol. 14, 2-8
Business Set Call Waiting Originate Vol. 14, 2-17
Business Set Dial Call Waiting Vol. 14, 2-25
Call Forward/Automatic Dial Display Vol. 14, 2-38
EBS as a Message Center Vol. 14, 2-41
EBS as a Message Center - Enhancements Vol. 14, 2-47
Enhanced EBS Reason Display Vol. 14, 2-63
Executive Msg Service Enhancement - Multi EMW per DN Vol. 14, 2-91
M5209 Introduction Vol. 14, 2-96
MADN Service Orders Vol. 14, 2-111
MBS II Templates Vol. 14, 2-119
MBS Auto Answer Back Vol. 14, 2-130
MBS Automatic Dial Vol. 14, 2-136
MBS Automatic Line Vol. 14, 2-143
MBS Busy Override Vol. 14, 2-148
MBS Call Back Queuing Vol. 14, 2-160
MBS Call Forward All Calls Feature Key S/W Vol. 14, 2-177
MBS Call Park Vol. 14, 2-189
MBS Call Pickup Feature Key S/W Vol. 14, 2-209
MBS Call Waiting Vol. 14, 2-218
MBS Display Called Number Vol. 14, 2-226
MBS Display Calling Number Vol. 14, 2-233
MBS End to End Signalling Vol. 14, 2-241
MBS Feature Code Access Vol. 14, 2-243
MBS Feature Display Vol. 14, 2-248
MBS Group Intercom Vol. 14, 2-257
MBS Held Calls Vol. 14, 2-265
MBS Individual Business Line Vol. 14, 2-267
MBS Intercom Vol. 14, 2-280
MBS Listen on Hold Vol. 14, 2-287
MBS MADN SCA/MCA (across Switch) Vol. 14, 2-289
MBS Make Set Busy Vol. 14, 2-297
MBS Malicious Call Hold Vol. 14, 2-307
MBS Onhook Dialing Vol. 14, 2-314
MBS Privacy Release (across Switch) Vol. 14, 2-316
MBS Query Time Key Vol. 14, 2-328
MBS Ring-Again Feature Key S/W Vol. 14, 2-333
MBS Speed Calling Feature Key S/W Vol. 14, 2-341
MBS Three-Way Calling Transfer Vol. 14, 2-355
MDC Circuit Test Enhancement Vol. 14, 2-361
Message Service - Leave Message Vol. 14, 2-376
Message Service - List Management Vol. 14, 2-392
SERVORD cleanup for MBS Vol. 14, 2-403
Short Hunt on MBS Vol. 14, 2-415

3 Datafilling MDC MBS Standard Vol. 14, 3-1

Call Park Recall Identification Vol. 14, 3-2
CFW for MADN Secondary Members Vol. 14, 3-17

EBS Call Forwarding on a per Key Basis Vol. 14, 3-26
Enhanced MADN Call Control Vol. 14, 3-54
Group Intercom All Call Vol. 14, 3-90
Individual Page from GIC Vol. 14, 3-101
Last Number Redial from Set Vol. 14, 3-110
MADN Bridging - 3 Way Call Vol. 14, 3-117
MADN Cut-off on Disconnect (COD) Vol. 14, 3-121
MADN Ring Forward Vol. 14, 3-136
Make Set Busy Except GIC Vol. 14, 3-148
Music on Hold for EBS Vol. 14, 3-160
Name Display for MADN Members Vol. 14, 3-179
Originating/Terminating Line Select (TLS) Vol. 14, 3-194
Repeated Alert for MBS Vol. 14, 3-205
Specific Key Ringback on Ring Again Request on EBS Vol. 14, 3-212

4 Datafilling MDC PRO Vol. 14, 4-1

ARS default public network routing Vol. 14, 4-2
Authcode for MDR Vol. 14, 4-12
Bellcore AMA Enhanced ARS Translations Vol. 14, 4-17
BOC AMA Call Code 032 Vol. 14, 4-30
CCSA Line Option Vol. 14, 4-34
Customer Administration of Data Vol. 14, 4-38
Customer Dialed Account Recording (CDAR) Vol. 14, 4-56
Customer Network Data Changes Vol. 14, 4-68
Customer Screening at the Trunk Test Position Vol. 14, 4-87
Customer Service Change Via SERVORD Vol. 14, 4-93
Direct Inward Dialing (DID) Vol. 14, 4-107

Translations Guide Volume 15 of 20
Meridian Digital Centrex (MDC) Part 5 of 6

1 Datafilling MDC PRO (continued) Vol. 15, 1-1

ESN - Detail Record Vol. 15, 1-2
ESN - Network ARS (TEHO and HEHO) Vol. 15, 1-7
ESN - Network Class of Service Vol. 15, 1-24
ESN - Network Information Signals Vol. 15, 1-29
ESN - Network Speed Call Vol. 15, 1-54
Executive Conference Vol. 15, 1-64
IDDD via ARS Vol. 15, 1-88
Killer Trunk Report Separation Vol. 15, 1-133
MAP Alarm Level Screening Vol. 15, 1-145
MDC Enhanced WATS Vol. 15, 1-150
MDR Data in the AMA Stream Vol. 15, 1-194
Multipilot Directory Numbers on MLH Group Vol. 15, 1-216
Outgoing Restriction Control Vol. 15, 1-225
Pending Order File (POF) Enhancements Vol. 15, 1-246
Preset Conference (Large) Vol. 15, 1-256
Series Completion Vol. 15, 1-273

Series Completions Enhancements Vol. 15, 1-282
Service Analysis for IBN Vol. 15, 1-287
SMDR Derived from Bellcore AMA Record Vol. 15, 1-293
Terminating Billing Option Vol. 15, 1-297
Time of Day NCOS Vol. 15, 1-312
Time of Day Routing Vol. 15, 1-324
TVDS - II Vol. 15, 1-333
UCD on EBS and UCD SD Point Vol. 15, 1-340
VFG MDR Suppression Vol. 15, 1-356
VMX Interface Vol. 15, 1-360

2 Datafilling MDC Tailored MDC 1 Vol. 15, 2-1
Calling Name Inspect Key Vol. 15, 2-2
Station Camp On for Meridian Business Set Vol. 15, 2-33

3 Datafilling MDC Tailored MDC 2 Vol. 15, 3-1
Direct Station Selection/Busy Lamp Field for MBS Vol. 15, 3-2
E911 Single Button Transfer Operation Vol. 15, 3-21
Fast Transfer for Meridian Business Set Vol. 15, 3-29
Interactive Display Menu on MBS Sets Vol. 15, 3-44
MBS Power Feature - Name Programming Vol. 15, 3-62
MDC Single Button Transfer Vol. 15, 3-75
Power Feature Audit Trails Vol. 15, 3-84
Power Features Enhancements I Vol. 15, 3-95
Power Features Installer Application Vol. 15, 3-131

4 Datafilling MDC Tailored MDC 3 Vol. 15, 4-1
Access Feature Grouping Vol. 15, 4-2
Copy Feature Set Enhancement Vol. 15, 4-58
MDC AFG Add Option Vol. 15, 4-71
MDC MBS Interactive Display Vol. 15, 4-88
PF Robustness - Call Forwarding per Key (CFK) Vol. 15, 4-101
PF Robustness - Call Pickup Separate Keys Compatibility Vol. 15, 4-118
PF Robustness - Enforced Password Vol. 15, 4-143

5 Datafilling MDC Tailored MDC 4 Vol. 15, 5-1
MDC DSS/BLF Set Based Vol. 15, 5-2
MDC Single Line Queue Vol. 15, 5-25

6 Datafilling MDC Tailored NARS Vol. 15, 6-1
Network Access Registers (NARS) Vol. 15, 6-2

7 Datafilling MDC Name/DN Blocking Vol. 15, 7-1
Block Calling Name/Number Delivery Blocking per Call Vol. 15, 7-2
Calling Name/Number Delivery Blocking (CNNB) Vol. 15, 7-20

8 Datafilling MDC Per Line Feature Control Vol. 15, 8-1
Network Feature Access Restriction Vol. 15, 8-2

9 Datafilling MDC Call Forward Indication Vol. 15, 9-1
Call Forward Indication Vol. 15, 9-2

10 Introduction to MDC to 10-digit Routing Vol. 15, 10-1
Understanding MDC to 10-digit routing Vol. 15, 10-1
Signaling for MDC to 10-digit routing Vol. 15, 10-2
Preparing to datafill MDC to 10-digit routing Vol. 15, 10-2
Functional groups for MDC to 10-digit routing Vol. 15, 10-3
MDC to 10-digit routing Vol. 15, 10-4

11 Introduction to MDC to Universal Routing Vol. 15, 11-1
Understanding MDC to Universal routing Vol. 15, 11-1
Signaling for MDC to Universal routing Vol. 15, 11-1
Preparing to datafill MDC to Universal routing Vol. 15, 11-1
Functional groups for MDC to Universal routing Vol. 15, 11-4
MDC to Universal Routing Vol. 15, 11-5

Translations Guide Volume 16 of 20
Meridian Digital Centrex (MDC) Part 6 of 6

1 Introduction to Automatic Call Distribution Vol. 16, 1-1
Understanding Automatic Call Distribution translations Vol. 16, 1-1
Base ACD Vol. 16, 1-2
Call distribution Vol. 16, 1-2
Load management Vol. 16, 1-3
ACD directory numbers Vol. 16, 1-4
ACD queues Vol. 16, 1-5
Single group call queues Vol. 16, 1-7
NACD Vol. 16, 1-11
Single-node configurations Vol. 16, 1-12
Multinode configurations Vol. 16, 1-13
Call queues Vol. 16, 1-16
Availability measures for NACD Vol. 16, 1-17
Call queuing and overflow treatment Vol. 16, 1-17
Queue and delay thresholds Vol. 16, 1-18
Types of NACD overflow Vol. 16, 1-18
Network call queues Vol. 16, 1-19
Availability measures Vol. 16, 1-19
Network queuing Vol. 16, 1-20
ACDMIS Vol. 16, 1-21
Single-user/supervisor system Vol. 16, 1-22
Multiple-user/supervisor system Vol. 16, 1-24
ACD reports Vol. 16, 1-26
Remote load management Vol. 16, 1-26
Meridian Digital Centrex interface to ACDMIS Vol. 16, 1-26
CompuCALL Vol. 16, 1-27
Communication process Vol. 16, 1-28
Service functionality Vol. 16, 1-29

Session management Vol. 16, 1-30
Operation, administration, and maintenance Vol. 16, 1-30
Meridian Automatic Call Distribution with CompuCALL Option Vol. 16, 1-31
Telephone sets for ACD Vol. 16, 1-31
ACD set description Vol. 16, 1-34
Hold key and autohold Vol. 16, 1-34
Release key Vol. 16, 1-34
Volume control Vol. 16, 1-34
ACD structure Vol. 16, 1-35
Signaling for Automatic Call Distribution Vol. 16, 1-37
Signaling protocols for Base ACD Vol. 16, 1-37
Signaling protocols for NACD Vol. 16, 1-37
CCS7 signaling Vol. 16, 1-37
PRI signaling Vol. 16, 1-37
Signaling protocols for ACDMIS Vol. 16, 1-37
Signaling protocols for CompuCALL Vol. 16, 1-38
X.25 and the OSI model Vol. 16, 1-38
CompuCALL and the OSI layers Vol. 16, 1-40
Preparing to datafill Automatic Call Distribution Vol. 16, 1-46
Datafilling CompuCALL Vol. 16, 1-46
Collecting end-user data Vol. 16, 1-46
Functional groups for Automatic Call Distribution Vol. 16, 1-62
ACD Base, ACD00001 Vol. 16, 1-62
CompuCALL, ACD00002 Vol. 16, 1-62
ACD Networking, ACD00004 Vol. 16, 1-62

2 Datafilling ACD Base Vol. 16, 2-1

ACD Access Feature Grouping Vol. 16, 2-2
ACD Enhanced Walkaway Vol. 16, 2-13
ACD Interaction with IVR Vol. 16, 2-29
ACD Load Management III Vol. 16, 2-34
ACD Management Reports Two-Way Data Stream Vol. 16, 2-62
ACD Night Service Call Queue Clearing Vol. 16, 2-79
ACD on 2500 Set Vol. 16, 2-86
ACD Remote Load Management I Vol. 16, 2-106
Base automatic call distribution (ACD) Vol. 16, 2-114
Call Forcing Tone Optionality Vol. 16, 2-209
Called About Number Vol. 16, 2-221
Enhanced Handling of ACD Re-Enqueued Calls Vol. 16, 2-238
MACD Nodal Service Observing Vol. 16, 2-261
MACD PIN Configuration and Control Vol. 16, 2-276

3 Datafilling CompuCALL Base Vol. 16, 3-1

ACD CompuCALL Vol. 16, 3-2
CompuCALL Enhancements-Screen-Assisted Telephony Vol. 16, 3-121
ECM/SCAI Support for Non-ACD Vol. 16, 3-144

4 Datafilling ACD Networking Vol. 16, 4-1
ACD Nodal Treatment in NACD Vol. 16, 4-2
ACD Supergroup Vol. 16, 4-8
Forced Announcements for NACD Vol. 16, 4-29
Networked ACD on CCS7 Vol. 16, 4-42
Networked ACD on PRA Vol. 16, 4-57

5 Datafilling ICM Call Manager Interface Vol. 16, 5-1
Called Party Address in ICM Messages Vol. 16, 5-2
CompuCALL Transport Enhancements Vol. 16, 5-12
ICM ACD DN Association Limit Vol. 16, 5-21

6 Datafilling ICM Call Center Vol. 16, 6-1
ICM Logon Enhancements and Reengineering Vol. 16, 6-2

7 Datafilling ICM Network ICM Vol. 16, 7-1
CompuCALL Integration with ICCM Vol. 16, 7-2
Network Intelligent Call Management Vol. 16, 7-26

8 Datafilling ICCM Call Queue Management Vol. 16, 8-1
CompuCALL Basic ICCM-Call Treatments Vol. 16, 8-2
CompuCALL Basic ICCM-Selective Queuing Vol. 16, 8-15

9 Datafilling ICM Enhanced ICCM Functionality Vol. 16, 9-1
CompuCALL Emergency Key Reporting Vol. 16, 9-2
CompuCALL LOB Event Report Vol. 16, 9-11
CompuCALL Multiple Recorded Announcement Vol. 16, 9-21
ICM Configuration Management Vol. 16, 9-30
ICM Interworking with MADN Vol. 16, 9-37
ICM Message Waiting Activation/Deactivation Vol. 16, 9-46
ICM TAPI Extensions Vol. 16, 9-65
ICM Three-Way Call Enhanced Status Reporting Vol. 16, 9-80
ICM Variable Wrap Reporting Vol. 16, 9-96
ICM Workqueue Re-Engineering Vol. 16, 9-106

10 Datafilling CompuCALL Status Query Vol. 16, 10-1
CompuCALL Status Query Vol. 16, 10-2

11 Appendix A: Example single-node network configuration Vol. 16, 11-1
Network configuration Vol. 16, 11-1
Defining customer groups Vol. 16, 11-2
Table DIGCOL Vol. 16, 11-2
Table XLANAME Vol. 16, 11-3
Table IBNXLA Vol. 16, 11-3
Table CUSTENG Vol. 16, 11-4
Table CUSTHEAD Vol. 16, 11-4
Table CUSTSTN Vol. 16, 11-4

Table NCOS Vol. 16, 11-4
Defining announcements Vol. 16, 11-5
Table DRAMS Vol. 16, 11-5
Table CLLI Vol. 16, 11-6
Table AUDIO Vol. 16, 11-6
Table ANNS Vol. 16, 11-6
Table ANNMEMS Vol. 16, 11-7
Table DRMUSERS Vol. 16, 11-7
Defining routing Vol. 16, 11-7
Table PADDATA Vol. 16, 11-7
Table TRKGRP Vol. 16, 11-8
Table TRKSGRP Vol. 16, 11-8
Table TRKMEM Vol. 16, 11-8
Defining ACD groups Vol. 16, 11-8
Table OFCENG Vol. 16, 11-9
Table ACDMISPL Vol. 16, 11-9
Table ACDMISSP Vol. 16, 11-9
Table ACDGRP Vol. 16, 11-10
Table ACDRTE Vol. 16, 11-11
Table NACDGRP Vol. 16, 11-12
Table CUSTNTWK Vol. 16, 11-12
Table ACDSGRP Vol. 16, 11-12
Table DNROUTE Vol. 16, 11-13
Table ACDLOGIN Vol. 16, 11-13
Table DNATTRS Vol. 16, 11-14
Table MPC Vol. 16, 11-14
Table MPCLINK Vol. 16, 11-14
Table GDLADEV Vol. 16, 11-15
Table NOPADDR Vol. 16, 11-15
Table NOPAPPLN Vol. 16, 11-15
Table KSETLINE Vol. 16, 11-16
Table KSETINV Vol. 16, 11-17
Table IBNFEAT Vol. 16, 11-17
NACD overflow formulas Vol. 16, 11-18
Call flow Vol. 16, 11-18

12 Appendix B: Network example for ACD using CCS7 Vol. 16, 12-1

Network configuration Vol. 16, 12-1
Defining customer groups Vol. 16, 12-2
Table DIGCOL Vol. 16, 12-3
Table XLANAME Vol. 16, 12-3
Table IBNXLA Vol. 16, 12-4
Table CUSTENG Vol. 16, 12-4
Table CUSTHEAD Vol. 16, 12-4
Table CUSTSTN Vol. 16, 12-5
Table NCOS Vol. 16, 12-5
Defining announcements Vol. 16, 12-5
Table DRAMS Vol. 16, 12-6
Table CLLI Vol. 16, 12-6

Table AUDIO Vol. 16, 12-7
Table ANNS Vol. 16, 12-7
Table ANNMEMS Vol. 16, 12-7
Table DRMUSERS Vol. 16, 12-8
Defining routing Vol. 16, 12-8
Table PADDATA Vol. 16, 12-8
Table TRKGRP Vol. 16, 12-8
Table TRKSGRP Vol. 16, 12-9
Table TRKMEM Vol. 16, 12-9
Defining Common Channel Signaling No. 7 translations Vol. 16, 12-9
Table C7NETWRK Vol. 16, 12-10
Table C7LKSET Vol. 16, 12-11
Table C7LINK Vol. 16, 12-11
Table C7RTESET Vol. 16, 12-11
Table C7NETSSN Vol. 16, 12-12
Table C7LOCSSN Vol. 16, 12-12
Table ISUPDEST Vol. 16, 12-12
Table C7TRKMEM Vol. 16, 12-13
Table IBNRTE Vol. 16, 12-13
Table CUSTNTWK Vol. 16, 12-13
Defining ACD groups Vol. 16, 12-13
Table OFCENG Vol. 16, 12-13
Table ACDMISPL Vol. 16, 12-14
Table ACDMISSP Vol. 16, 12-14
Table ACDGRP Vol. 16, 12-14
Table ACDRTE Vol. 16, 12-16
Table REMNACD Vol. 16, 12-18
Table NACDGRP Vol. 16, 12-18
Table ACDSGRP Vol. 16, 12-19
Table DNROUTE Vol. 16, 12-20
Table ACDLOGIN Vol. 16, 12-21
Table DNATTRS Vol. 16, 12-21
Table MPC Vol. 16, 12-22
Table MPCLINK Vol. 16, 12-23
Table GDLADEV Vol. 16, 12-23
Table NOPADDR Vol. 16, 12-23
Table NOPAPPLN Vol. 16, 12-24
NACD overflow formulas Vol. 16, 12-24
Call flow Vol. 16, 12-24

13 Appendix C: Network example for ACD using PRI Vol. 16, 13-1

Network configuration Vol. 16, 13-1
Defining customer groups Vol. 16, 13-3
Table DIGCOL Vol. 16, 13-3
Table IBNXLA Vol. 16, 13-4
Table XLANAME Vol. 16, 13-4
Table CUSTENG Vol. 16, 13-4
Table CUSTHEAD Vol. 16, 13-5
Table CUSTSTN Vol. 16, 13-5

Table NCOS Vol. 16, 13-5
Defining announcements Vol. 16, 13-5
Table DRAMS Vol. 16, 13-6
Table CLLI Vol. 16, 13-6
Table AUDIO Vol. 16, 13-7
Table ANNS Vol. 16, 13-7
Table ANNMEMS Vol. 16, 13-8
Table DRMUSERS Vol. 16, 13-8
Defining trunk and call routing Vol. 16, 13-8
Table PADDATA Vol. 16, 13-9
Table LTCINV Vol. 16, 13-10
Table CARRMTC Vol. 16, 13-10
Table LTCPSINV Vol. 16, 13-11
Table ADJNODE Vol. 16, 13-11
Table TRKGRP Vol. 16, 13-12
Table TRKSGRP Vol. 16, 13-12
Table TRKMEM Vol. 16, 13-13
Table LTGRP Vol. 16, 13-13
Table LTDEF Vol. 16, 13-14
Table LTMAP Vol. 16, 13-14
Table LTDATA Vol. 16, 13-14
Table LTCALLS Vol. 16, 13-15
Table IBNRTE Vol. 16, 13-15
Table NETNAMES Vol. 16, 13-15
Table CUSTNTWK Vol. 16, 13-15
Defining ACD groups Vol. 16, 13-16
Table OFCENG Vol. 16, 13-16
Table ACDMISPL Vol. 16, 13-16
Table ACDGRP Vol. 16, 13-17
Table ACDRTE Vol. 16, 13-19
Table REMNACD Vol. 16, 13-21
Table NACDGRP Vol. 16, 13-21
Table ACDSGRP Vol. 16, 13-22
Table DNROUTE Vol. 16, 13-23
Table ACDLOGIN Vol. 16, 13-23
Table DNATTRS Vol. 16, 13-24
Table MPC Vol. 16, 13-25
Table MPCLINK Vol. 16, 13-25
Table GDLADEV Vol. 16, 13-25
Table NOPADDR Vol. 16, 13-26
Table NOPAPPLN Vol. 16, 13-26
NACD overflow formulas Vol. 16, 13-26
Call flow Vol. 16, 13-27

NTP Summary Contents

This summarized table of contents defines the category of product information that can be found in each volume of the *Translations Guide*. Each volume of the *Translations Guide* contains a detailed listing of the contents of that volume and a multi-volume contents listing if related subject matter spans multiple volumes.

Volume 1 of 20

Common Datafill and Miscellaneous Services Part 1 of 3

10-digit Translations, Trunk Tables

Volume 2 of 20

Common Datafill and Miscellaneous Services Part 2 of 3

Base Services, BAS AMA Cook, BAS Generic

Volume 3 of 20

Common Datafill and Miscellaneous Services Part 3 of 3

BAS Generic (continued), BAS ANI Enhanced, BAS CCS7, SMB Translations, SAID Essentials, FAX-Thru Service, MDS Call Messenger, XLAS Translations

Volume 4 of 20

SS7 Datafill

Number Translation Services, DMS SP/SSP, Trunk Signaling, ISDN User Part (ISUP)

Volume 5 of 20

Screening and Routing Datafill

Universal Translations, Universal Call Processing, UDDD Service, AIN Essentials, AIN Service Enablers

Volume 6 of 20

Competitive Services Part 1 of 2

LNP Translations, Equal Access, EQA Local, EQA Toll

Volume 7 of 20

Competitive Services Part 2 of 2

LATA Equal Access System, Number Portability Service Base, Local Services, LOC Carrier Parameter, LOC Dialing Enhancements, LOC DOLP Selector, LOC Resale/Unbundling, Local Service Provider-Networks, Local Call Area Screening, LOC Generic CPN

Volume 8 of 20

Data, ISDN, and Internet Services Part 1 of 3

1-Meg Modem Service, Datapath, Data Span, ISDN BRI, NI0 ISDN Base, NI0 NI-1 BRI, NI0 NI-1 BRI Enhanced Maintenance

Volume 9 of 20

Data, ISDN, and Internet Services Part 2 of 3

NI0 NI-1 Packet, NI0 NI-2/3 BRI, NI0 NI-2 BRI Services

Volume 10 of 20

Data, ISDN, and Internet Services Part 3 of 3

MISC ISDN Enhancements, NI0 NI98 Enhancements Ph1, NI0 NI98 Enhancements Ph2, PRI Translations, NI0 NI-1 PRI, NI0 NI-1 PRI Networking, NI0 NI-2 PRI, NI0 ISDN PRI Base, NI0 ISDN PRI CNAM, PRI Hotel/Motel, B-Channel Packet PRI, NI0 Circular Hunt-NA, NI0 E911 SCRN NI-2, ISDN DWS, DMS-100 and Meridian 1 Options 11-81 datafill correlation, Call Treatments and Cause Values

Volume 11 of 20

Meridian Digital Centrex (MDC) Part 1 of 6

Meridian Digital Centrex, MDC Minimum

Volume 12 of 20

Meridian Digital Centrex (MDC) Part 2 of 6

MDC Minimum (continued), MDC MSAC, MDC Standard

Volume 13 of 20

Meridian Digital Centrex (MDC) Part 3 of 6

MDC Standard (continued), MDC CLASS on MDC, MDC MBG Minimum, MDC MBG Standard

Volume 14 of 20

Meridian Digital Centrex (MDC) Part 4 of 6

MDC MBG Standard (continued), MDC MBS Minimum, MDC MBS Standard, MDC PRO

Volume 15 of 20

Meridian Digital Centrex (MDC) Part 5 of 6

MDC PRO (continued), MDC Tailored MDC 1, MDC Tailored MDC 2, MDC Tailored MDC 3, MDC Tailored MDC 4, MDC Tailored NARS, MDC Name/DN Blocking, MDC Per Line Feature Control, MDC Call Forward Indication, MDC to 10-digit Routing, MDC to Universal Routing

Volume 16 of 20

Meridian Digital Centrex (MDC) Part 6 of 6

Automatic Call Distribution, ACD Base, CompuCALL Base, ACD Networking, ICM Call Manager Interface, ICM Call Center, ICM Network ICM, ICCM Call Queue Management, ICM Enhanced ICCM Functionality, CompuCALL Status Query, Appendixes

Volume 17 of 20

Residential Enhanced Services (RES) Part 1 of 3

Residential Enhanced Services, RES Access Management, RES Advanced Custom Calling

Volume 18 of 20

Residential Enhanced Services (RES) Part 2 of 3

RES Display Functionality and Privacy, RES Interface Functionality

Volume 19 of 20

Residential Enhanced Services (RES) Part 3 of 3

RES Non-Display Services, RES Service Enablers, RES Signaling, Routing, and OAM, In-Session Activation, RES AutoRecall with Name, Malicious Call Tracking Logs, Appendixes

Volume 20 of 20

Emergency Services

Emergency Number Services, GETS0001

1 Datafilling MDC MBG Standard (continued)

The following chapter describes the MDC MBG Standard, MDC00006, functionality.

RLT with No Third Party Interaction-Canada only

Ordering codes

Functional group ordering code: MDC00006

Functionality ordering code: does not apply

Release applicability

NA008 and later versions

Requirements

To operate, RLT with No Third Party Interaction-Canada only has the following requirements:

- BAS Generic, BAS00003
- Base ISUP, ISP70001

Description

The Call Completion with Trunk Optimization (CCTO) feature removes redundant integrated services digital network (ISDN) user part (ISUP) trunks. This removal occurs during call transfer or a change in direction on ISUP trunks to a simplified message desk interface (SMDI) data link. This removal can occur on ISUP trunks to Meridian Digital Centrex (MDC) lines.

The RLT with No Third Party Interaction-Canada only feature provides CCTO to calls without third-party interaction. Calls of this type are calls in which the called party does not connect to the final destination. The RLT with No Third Party Interaction-Canada only adds the DIAL method of call transfer (CXR).

Note: This feature does not support CCTO with third-party interaction.

Operation

The RLT with No Third Party Interaction can be in use for the following conditions:

- an end user calls an SMDI voice messaging system (VMS) to retrieve messages. The end user has the SMDI VMS redirect the call to caller that left a message.
- a call terminates on an MDC line. The end user transfers the call to another line.
- an end user dials an 800 number. The system reroutes the end user after the 800 service determines the destination directory number (DN). The 800 service transfers the end user.

RLT with No Third Party Interaction-Canada only (continued)

When a requesting switch initiates CCTO, the system checks if the new called party DN is in the requesting switch. If the DN is in the requesting switch, the system does not send the CCTO.

If the new called party DN is not in the requesting switch, the system sends the CCTO request to the preceding node. The CCTO request is in the form of an ISUP release message. The ISUP release message contains a service activation parameter (SAP) and a completion number generic address parameter (GAP).

The system transmits the CCTO request in the backward direction from office to office. This action occurs until the request reaches an office where one of the following conditions occurs:

- the office is a point of interworking with a non-ISUP agent
- the office generated an Enhanced 800 Service (E800) request on the call

The system performs billing at the serving switch. The originating switch maintains the disconnect control.

Call transfer

To activate RLT with No Third Party Interaction-Canada only, the called end user must use the DIAL method of call transfer.

The system uses CCTO when the called end user activates CXR with the DIAL method. The end user dials the destination DN of the second leg to activate CCTO.

CCTO on E800 service

The requesting and serving switches cannot be the same if the following conditions apply:

- the system performs billing in the office where E800 requests are launched
- the combined billing option is a requirement

The SMDI or MDC line that initiates the CCTO request must be at another node. This line must connect by ISUP trunks from the serving switch to the requesting switch. If the requesting switch is the same switch that makes the E800 query, the system performs billing in the serving switch. This configuration only affects the combined billing option.

Reverse translations

Conversion of the DN that the SMDI or MDC line supplies can require reverse translations at the requesting switch. The DN converts to a seven or ten digit

RLT with No Third Party Interaction-Canada only (continued)

GAP. Conversion of the DN the GAP supplies can require reverse translations at the serving switch. The DN converts to a form that the end user can dial.

User interface

The RLT with No Third Party Interaction-Canada only does not affect user interface.

Translations table flow

Descriptions of the RLT with No Third Party Interaction-Canada only translations tables appear in the following list:

- Table CUSTSTN (Customer Group Station Option) is a requirement for a switching unit with North American translations and MDC. The table lists the station options assigned to each customer group. For this feature, table CUSTSTN has the value DIAL added to subfield METHOD for option CXR.
- Table IBNFEAT (IBN Line Feature) contains features assigned to IBN lines. For this feature, table IBNFEAT has the value DIAL added to field METHOD. This table is a refinement of field FEATURE for option CXR.
- Table KSETFEAT (Business Set and Data Unit Feature) lists the line features assigned to an MBS or data unit. For this feature, table KSETFEAT has the value DIAL added to subfield METHOD for option CXR.
- Table FTRGOPTS (Feature Group Options) assigns groups of line options to feature groups defined in an office. This table specifies the characteristics of each feature group option. For this feature, table FTRGOPTS has the value DIAL added to subfield METHOD for option CXR.

The RLT with No Third Party Interaction-Canada only translation process appears in the following flowchart.

RLT with No Third Party Interaction-Canada only (continued)

Table flow for RLT with No Third Party Interaction-Canada only

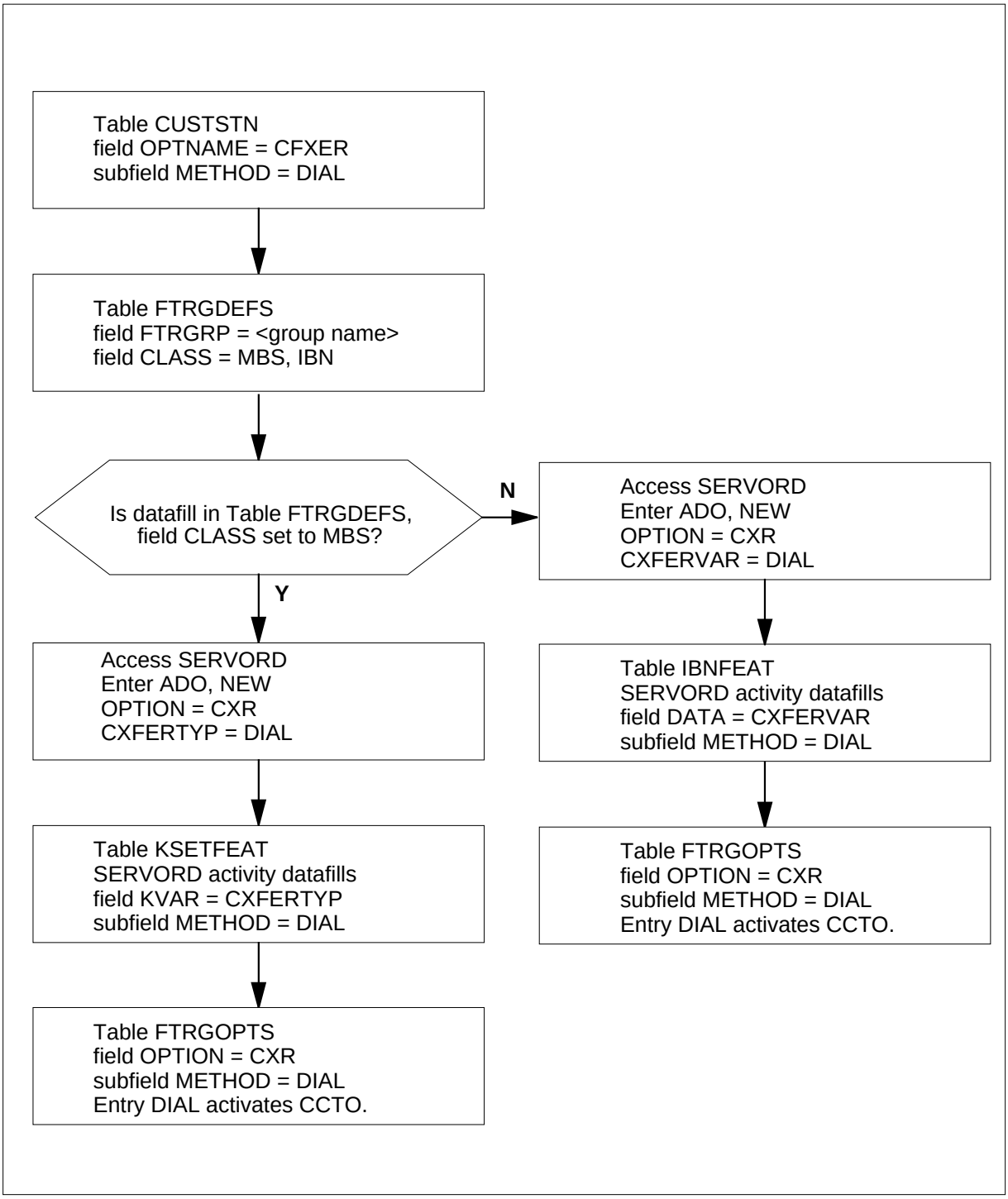

RLT with No Third Party Interaction-Canada only (continued)

The datafill content used in the flowchart appears in the following table.

Datafill example for RLT with No Third Party Interaction-Canada only

Datafill table	Example data
CUSTSTN	NCSU CXFER CXFER CTALL N DIAL
IBNFEAT	HOST 00 0 03 16 CXR CXR CTALL N DIAL
KSETFEAT	HOST 00 0 00 09 3 CXR CXR CTALL N DIAL
FTRGOPTS	FTRGRP1 CXR CXR CTALL N DIAL

Limits

The following limits apply to RLT with No Third Party Interaction-Canada only:

- The requesting switch must have ISUP trunks to cause CCTO.
- The system cannot offer CCTO if the call is from an attendant console.
- If billing is a requirement, the second leg of CCTO call fails. Another condition of this failure is that you did not enter data in field BILLDN in table TRKGRP (Trunk Group) of the incoming trunk group for non-ISUP trunks.
- The requesting switch must not be the same as the serving switch. This condition must apply if the system performs billing in the office where the system launches E800 requests.
- The line that initiates the CCTO request must be at another node. The line must connect by ISUP trunks from the serving switch to the requesting switch.
- The system gives treatment to the originator. The originator does not connect to the serving switch if the destination DN is not correct.
- The system does not update the display of the caller Meridian business set (MBS) with display to reflect the new call configuration if the system uses CCTO.
- The CCTO that involves third-party interaction is not supported.

Interactions

The RLT with No Third Party Interaction-Canada only does not have functionality interactions.

RLT with No Third Party Interaction-Canada only (continued)

Activation/deactivation by the end user

The RLT with No Third Party Interaction-Canada only does not require activation or deactivation by the end user.

Billing

The RLT with No Third Party Interaction-Canada only does not affect billing.

Station Message Detail Recording

The RLT with No Third Party Interaction-Canada only does not affect Station Message Detail Recording.

Datafilling office parameters

A new office parameter, CCTO_COMB_BILL, is added to table OFCOPT (Office Option). Office parameter CCTO_COMB_BILL indicates if billing records generated for each leg of a CCTO call combine into one billing record.

Office parameter CCTO_COMB_BILL can be Y. In this condition, CCTO requests processed at that node result in one billing record for both legs of a CCTO call. If the CCTO_COMB_BILL office parameter is N, the system treats each leg of a call with CCTO as a separate call. The system produces separate billing records for each leg of the call.

The calling DN is the charge DN in the billing records. If the calling DN is not at the switch that receives the CCTO request, the incoming trunk BILLDN is the charge DN. Datafill in table TRKGRP specifies the BILLDN of the incoming trunk. If billing is a requirement and a charge DN is not available, the call fails.

> ***Note:*** Only authorized Northern Telecom (Nortel) personnel can change the CCTO_COMB_BILL office parameter. The end user has read-only access to this parameter.

The office parameters used by RLT with No Third Party Interaction-Canada only appear in the following table. Refer to *Office Parameters Reference Manual* for additional information about office parameters.

Office parameters used by RLT with No Third Party Interaction-Canada only

Table name	Parameter name	Explanation and action
OFCOPT	CCTO_COMB_BILL	Specifies if billing is combined or separate. Enter Y if billing is combined or N if billing is separate. The default value is N.

RLT with No Third Party Interaction-Canada only (continued)

Datafill sequence

The tables that require datafill to implement RLT with No Third Party Interaction-Canada only appear in the following table. The tables appear in the correct entry order.

Datafill requirements for RLT with No Third Party Interaction-Canada only

Table	Purpose of table
CUSTSTN	Customer Group Station Option. This table is a requirement for a switching unit with North American translations and MDC. The table lists the station options assigned to each customer group.
IBNFEAT (Note)	IBN Line Feature. This table contains features assigned to IBN lines.
KSETFEAT (Note)	Business Set and Data Unit Feature. This table contains the line features assigned to an MBS or data unit.
FTRGOPTS	Feature Group Options. This table assigns groups of line options to feature groups defined in an office.
Note: Use SERVORD to enter data in this table. A datafill procedure is not available.	

Datafilling table CUSTSTN

Table CUSTSTN (Customer Group Station Option) is a requirement for a switching unit with North American translations and MDC. The table contains the station options assigned to each customer group. For this feature, the value DIAL was added to subfield METHOD.

Datafill for RLT with No Third Party Interaction-Canada only for table CUSTSTN appears in the following table. The fields that apply to RLT with No Third Party Interaction-Canada only appear in this table. See the data schema section of this document for a description of the other fields.

Datafilling table CUSTSTN (Sheet 1 of 2)

Field	Subfield or refinement	Entry	Explanation and action
OPTNAME		CXFER	Option name. This field defines the option name. Enter CXFER.
OPTION		see subfields	Option. This field contains several subfields. Only subfields OPTION, CXTYPE, XFERRCL and METHOD are important to this feature.

RLT with No Third Party Interaction-Canada only (continued)

Datafilling table CUSTSTN (Sheet 2 of 2)

Field	Subfield or refinement	Entry	Explanation and action
	OPTION	CXFER	Option Name. This subfield defines the option. Enter CXFER.
	CXTYPE	CTALL	Call Transfer Type. This subfield defines the call transfer type. Enter CTALL.
	XFERRCL	N	Call Transfer Recall. This subfield determines if transferred calls can recall the transferring station. Enter N.
	METHOD	DIAL	Method. This subfield defines the method of call transfer. The CCTO activates when you enter DIAL in subfield METHOD. Enter DIAL.

Datafill example for table CUSTSTN

Sample datafill for table CUSTSTN appears in the following example.

MAP example for table CUSTSTN

```
CUSTNAME        OPTNAME
                      OPTION
_____________________________________________________________
NCSU           CXFER     CXFER   CTALL   N  DIAL
```

Datafilling table FTRGOPTS

Table FTRGOPTS (Feature Group Options) assigns groups of line options to feature groups defined in an office. This table specifies the characteristics of separate feature group options. For this feature, table FTRGOPTS changes to allow the DIAL method of call transfer as a correct feature group option.

Datafill for RLT with No Third Party Interaction-Canada only for table FTRGOPTS appears in the following table. The fields that apply to RLT with

RLT with No Third Party Interaction-Canada only (continued)

No Third Party Interaction-Canada only appear in this table. See the data schema section of this document for a description of the other fields.

Datafilling table FTRGOPTS

Field	Subfield or refinement	Entry	Explanation and action
FTRGRP		alphanumeric	Feature group name. This field defines the feature group name. Enter the appropriate name.
OPTION		CXR	Feature group option. This field defines the option. Enter CXR.
OPTVAR		see subfields	Option Variable Area. This field contains subfields OPTION, CXFERVAR, CXFERRCL and METHOD.
	OPTION	CXR	Option. This subfield defines the option. Enter CXR.
	CXFERVAR	CXFERTYP	Call transfer variable area. This subfield contains subfield CXFERTYP.
	CXFERTYP	CTALL	Call transfer type. This subfield defines the call transfer type. Enter CTALL.
	CXFERRCL	CXRRCL	Call transfer recall variable area. This subfield contains subfield CXRRCL.
	CXFRCL	N	Call transfer recall. This subfield defines the call transfer recall. Enter N.
	METHOD	DIAL	Method. This subfield defines the method of call transfer. The CCTO activates when you enter DIAL in subfield METHOD. Enter DIAL.

Datafill example for table FTRGOPTS

Sample datafill for table FTRGOPTS appears in the following example.

MAP example for table FTRGOPTS

```
FTRGRP          OPTION    OPTION                    OPTVAR
_______________________________________________________________
NCSU1            CXR       CXR                       CTALL
 N   DIAL
```

Tools for verifying translations

The RLT with No Third Party Interaction-Canada only does not use tools for verifying translations.

SERVORD

Enter RLT with No Third Party Interaction-Canada only through the Service Order System (SERVORD) with command ADO (add option). The SERVORD prompt METHOD is DIAL.

SERVORD limits

The RLT with No Third Party Interaction-Canada only does not have SERVORD limits.

SERVORD prompts

The SERVORD prompt used to assign RLT with No Third Party Interaction-Canada only to a current line appears in the following table.

SERVORD prompt for RLT with No Third Party Interaction

Prompt	Valid input	Explanation
METHOD	DIAL	Defines the method of call transfer. Enter DIAL. The CCTO activates when METHOD is DIAL.

Note: The system enters data in tables IBNFEAT and KSETFEAT when you assign RLT with No Third Party Interaction with SERVORD.

SERVORD example for implementing RLT with No Third Party Interaction-Canada only

The addition of RLT with No Third Party Interaction-Canada only to a current line appears in the following SERVORD example. Perform this addition with use of the ADO command.

RLT with No Third Party Interaction-Canada only (end)

SERVORD example for RLT with No Third Party Interaction-Canada only in prompt mode

```
>ADO
SONUMBER:   NOW 92  11  3   PM
>
DN_OR_LEN:
> 3000
OPTKEY:
> 4
OPTION:
> CXR
CXFERTYPE:
> CUSTOM
ORGINTER:
> AC
ORGINTRA:
> AC
TRMINTER:
> AC
TRMINTRA:
> AC
CXRRCL:
> Y
RCLTIM:
> 45
METHOD:
> DIAL
OPTKEY:
> $
```

SERVORD example for RLT with No Third Party Interaction-Canada only in no-prompt mode

```
>ADO $ 3 0 0 0 4 CXR CUSTOM AC AC AC AC Y 45 DIAL $
```

TCAP calling name delivery for MDC

Ordering codes

Functional group ordering code: MDC00006

Functionality ordering code: MDC00024

Release applicability

NA008 and up

The TCAP calling name delivery for MDC feature was introduced in NA005.

Requirements

To operate, TCAP calling name delivery for MDC requires the functional groups that follow:

- BAS00003, BAS Generic
- ISP70001, Base ISUP
- TEL00008 CCS7, Transaction Service Support

Description

The TCAP calling name delivery for MDC feature is a terminating feature that allows the name of the calling party to be retrieved from a centralized name database using TCAP.

The TCAP calling name delivery for MDC feature is offered on a customer group basis to Centrex end users including Integrated Business Network (IBN), Meridian Business Set (MBS [M5XXX, excluding ISDN set]), and Electronic Business Set (EBS) end users.

The TCAP calling name delivery for MDC feature for Centrex end users is an extension of the Calling Name Delivery (CNAMD) feature using TCAP for residential end users (AN0323). The AN0323 feature was developed in BCS36 based on the Bellcore Technical Reference (TR-NWT-001188), Customer Local Area Signaling Services (CLASS) Calling Name Delivery generic requirements.

Note: The TCAP calling name delivery for MDC feature does not use the business group identifier (BGID) to look up the TCAP calling name information for intragroup basic business group (BBG) or multiswitch business group (MBG) calls described in the Bellcore Technical Reference (TR-NWT-001188).

TCAP calling name delivery for MDC (continued)

The call processing and application portion for the TCAP calling name delivery for MDC for MDC feature for Centrex users is taken from the CLASS: TCAP for Calling Name Delivery (AN0232) and the CLASS Calling Name TR Compliancy-Residential (AN0323) features.

For more details, refer to the *DMS-100 Feature Description Manual*.

Operation

The calling name is retrieved from a centralized name database, which is served by a Service Control Point (SCP), and is delivered to the Centrex TCAPNM end user's customer premises equipment (CPE).

Note: The TCAP calling name delivery for MDC feature uses the same centralized name database as the TCAP CNAMD feature for residential end users.

TCAP interface for calling name delivery

Queries to the centralized name database are performed using the TCAP layer of the Common Channel Signaling No 7 (CCS7) protocol. The TCAP interface functionality is provided by feature TCAP for Calling Name Delivery (AN0232). The delivery of the TCAP calling name information over a network is only supported if full CCS7 connectivity exists and if all nodes recognize and transport the TCAP calling name information.

The TCAP calling name delivery for MDC feature uses the TCAP Query with Permission (QWP) and Response packages. A TCAP QWP package contains a name request parameter and a ten-digit North American Numbering Plan (NANP) calling directory number (DN). This package is launched from the terminating switch to the centralized name database to request the TCAP calling name information. The centralized name database returns the TCAP calling name information in a TCAP Response package to the terminating switch, which delivers either the name and DN of the calling party, or a Private or Out-of-Area indication to the end user's CPE.

Note 1: TCAP calling name information refers to the name (maximum of 15 characters in length), and the permanent privacy status of the calling party.

Note 2: The DN may not be displayed with the name on the end user's CPE, depending on the number of characters the type of CPE can display.

Intraswitch and interswitch calls

TCAP calling name information is delivered for both intraswitch calls and interswitch calls. For intraswitch calls, the ten-digit DN is derived directly from the originating end user. For interswitch calls, the ten-digit DN is

TCAP calling name delivery for MDC (continued)

obtained from the calling party number parameter of the integrated services digital network (ISDN) user part (ISUP) initial address message (IAM). The centralized name database responds with a TCAP Response package containing the name and the permanent privacy status associated with the name for the ten-digit DN included in the service key parameter.

Name database

For a call terminating to Centrex end users, table CUSTNTWK is referenced to determine if the call requires a TCAP query. If the TCAPNM option is assigned to the customer group in which the called party belongs, a TCAP query is then launched to obtain the calling name from the centralized name database. If the customer group of the called party does not have the TCAPNM option assigned, the TCAP calling name information is obtained from the proprietary name database. If the proprietary name is not available, an Out-of-Area indication is delivered to the end user's CPE.

TCAP timing

When a request is made for TCAP to initiate a query for calling name information, a name delivery timer is set to determine the length of time (in seconds) the call process waits for the TCAP response. If the timer expires before receiving the TCAP response, the call proceeds and an Out-of-Area indication is delivered to the end user's CPE.

The operating company controls the value of the timer through the customer group option NDTIMOUT (name delivery timeout) in table CUSTHEAD. The NDTIMOUT field value ranges from 1 to 6 seconds with a default of 3 seconds.

Ringing supervision

For intraswitch calls terminating to IBN end users, audible ringing is applied to the originator. For interswitch calls over ISUP, the address complete message (ACM) is sent to the originating office, and audible ringing is then provided to the originator. Nil ringing applies to the terminating party until the TCAP response is received or the timer expires.

Once the TCAP response is received or the timer expires, the terminating line resumes applying power ringing to the line. Because the display on IBN lines is dependent on ringing, power ringing is not applied until after the response is received or the timeout occurs.

For calls terminating to MBS or EBS end users, power ringing is applied as soon as the terminating line is reachable (idle), and the calling name is displayed as soon as the TCAP response is received. However, there may be a

TCAP calling name delivery for MDC (continued)

delay between the time ringing is applied and the time the TCAP response is received.

Note: For MBS and EBS end users, the display is left blank for a Private or Out-of-Area indication.

Automatic call gapping

When the SCP serving the centralized name database is overloaded, it instructs the SSP to reduce the number of CNAMD TCAP database queries. The SCP instructs the SSP by including an automatic call gapping (ACG) request in the TCAP response package. The ACG request is included whenever ACG controls are put into effect or removed at the SSP.

In the case of an overload, or where software resources are lacking to send a TCAP query, a call is terminated normally and an Out-of-Area indication is delivered to the CPE.

For more details on ACG, refer to feature AN0232.

Permanent privacy status and per-call privacy features

The permanent privacy status is stored against the ten-digit DN in the name database. It is a preselected value for a calling party's name presentation status, which can have a value of Allowed, Restricted, Toggle, or No.

Some originating per-call privacy features can change the permanent privacy status of the calling name. Those features are described in the following paragraphs.

Calling Name Delivery Blocking (CNAB)

The CNAB feature allows an end user to control the calling name delivery for each originated call. Invoking the CNAB feature toggles the permanent privacy status of the calling name for the current call. For example, an end user with a permanent privacy status of Allowed can toggle to be Restricted by activating the CNAB feature, which results in a Private indication being displayed on the terminating end user's CPE.

Calling Name Number Blocking (CNNB)

The CNNB feature allows the end user to override permanent privacy status. When CNNB is invoked, a Private indication is delivered to the CPE regardless of the permanent privacy status.

Calling Number Delivery (CND)

The CND feature allows the end user to override the permanent privacy status. When CND is invoked, the number is delivered to the CPE regardless of the

permanent privacy status associated with the name in the centralized name database.

Calling Number Delivery Blocking (CNDB)

The CNDB feature allows the end user to override the permanent privacy status. When CNDB is invoked, and TCAPNM_BLK_QUERY_PRIV_DNS is set to Y, no query is launched to the centralized name database, and a Private indication is delivered to the CPE. When TCAPNM_BLK_QUERY_PRIV_DNS is set to N, a query is launched and the name, but not the number, is displayed based on the permanent privacy status in the centralized name database.

The permanent privacy status returned from the centralized name database is indicated in the presentation subfield of the TCAP generic name (GN) parameter. For interswitch calls, the privacy status of the calling name and that of the calling party number are sent in the presentation subfield of the ISUP GN parameter and of the ISUP calling party number (CPN) parameter respectively. Depending on the permanent privacy status of the ISUP GN and ISUP CPN, and the TCAP GN parameter, different information is sent to the Centrex end user's CPE.

InterLATA name query control

Office parameter TCAPNM_INTERLATA_QUERY in table OFCVAR is used to determine whether a TCAP query is performed for interLATA calls. When the parameter is set to Y, both intraLATA and interLATA calls to RES, IBN, MBS, and EBS end users invoke a TCAP query when required. When the parameter is set to N, only intraLATA calls invoke a TCAP query. The default value of the parameter is N.

To determine if a call is interLATA, the ten-digit calling party number must be available in the IAM, and the Nature of Address, in the ISUP CPN parameter must indicate a unique or non-unique national number. If the above is true, the LATA of the called line (obtained from table LINEATTR using the line attribute of the terminating line) and the calling number are used to index into table LATAXLA. The LATA field in the tuple obtained from table LATAXLA indicates whether the call is an interLATA or an intraLATA call. If the tuple does not exist in the table, the call is classified as an intraLATA call.

There is no line attribute assigned to Centrex lines as there is with RES lines. Therefore, to determine the line attribute for Centrex lines, an Automatic Recall (AR) reverse translation is performed to obtain the dialable number of the calling party. If the reverse translation is successful, an IBN translation is then performed to determine the line attribute associated with the terminating Centrex line. Once the line attribute of the terminating Centrex line is obtained,

TCAP calling name delivery for MDC (continued)

the method described in the previous paragraph is used to determine whether the call is interLATA or intraLATA.

> ***Note:*** The call is classified as intraLATA when the line attribute of the terminating Centrex line cannot be determined due to unsuccessful reverse translation or incorrect datafill.

Block queries for private numbers

Office parameter TCAPNM_BLK_QUERY_PRIV_DNS in table OFCVAR is used to control whether the centralized name database is queried when:

- no ISUP GN parameter is present in the IAM
- the calling party number has a presentation status of Restricted

When the parameter is set to Y and the above two conditions are met, the name database is not queried and a Private indication is sent to the CPE. When the parameter is set to N, queries to the centralized name database are not dependent on the presentation status of the calling party's number. The default value of the parameter is Y.

Limitations and restrictions

The limitations and restrictions that follow apply to TCAP calling name delivery for MDC:

- ISDN user part (ISUP) CCS7 connectivity is required for interoffice calls to transmit the calling DN to the terminating switch
- all necessary datafill to provide the residential TCAPNM CNAMD feature (AN0323) is required
- all necessary datafill to provide the TCAP interface functionality (AN0232) is required

Interactions

The paragraphs that follow describe how TCAP calling name delivery for MDC interacts with other functionalities.

Advanced Intelligent Network (AIN)

The calling party identification returned from the AIN 0.1 SCP is used to query the centralized name database rather that the DN of the calling party. This allows the name associated with the calling party ID to be displayed on the terminating Centrex end user's CPE.

> ***Note:*** When the calling party identification is not provided in the AIN response, the DN of the calling party is used for querying the centralized name database.

TCAP calling name delivery for MDC (continued)

Anonymous Caller Rejection (ACRJ)

With the ACRJ feature, only the calling number is used to determine the anonymity of the calling party when terminating to lines in a customer group that is assigned the TCAPNM option, and not the status of the calling name information.

Note: With the calling name delivery from the local database, ACRJ uses both the name and number information to determine anonymity.

Automatic Call Back (ACB) and Automatic Recall (AR)

The ACB and AR features check on the busy/idle status of an intended line termination. If the line is busy, ACB/AR activate ring again once the line is idle. TCAP calling name information is delivered to the Centrex called party, but not to the calling party during ring again.

Automatic Call Distribution (ACD)

The ACD feature allows a large number of incoming calls terminating on one or more central DNs to be distributed among a fixed group of ACD members. TCAP calling name information is not delivered to Centrex members of an ACD group.

Call Forward Universal (CFU), Call Forward Busy (CFB), and Call Forward Fixed (CFF)

When a Centrex TCAPNM end user has activated the CFU, CFB, or CFF feature, no name information is transmitted to the CPE upon call forwarding, unless the call is forwarded to another Centrex TCAPNM end user.

For all call forwarding scenarios that forward over ISUP, the TCAP calling name is not sent in the IAM. The terminating office is responsible for querying the centralized name database for TCAP calling name information based on the calling party number in the ISUP IAM.

Call Forwarding Don't Answer (CFDA)

The CFDA feature allows the call to be forwarded to a remote party when the call is not answered in the specified period of time. TCAP calling name information is forwarded to the remote party, if the remote party is within a customer group with the TCAP calling name delivery for MDC feature.

Call Forward Group Do Not Answer (CFGD) for hunt groups

The CFGD feature for hunt groups allows calls to idle hunt group members to be forwarded when the call is not answered within a certain amount of time. The call is forwarded either internally to the next member within the hunt group, or externally to a DN that is outside the hunt group, but within the customer group. TCAP calling name information is delivered when the call is

TCAP calling name delivery for MDC (continued)

forwarded externally, but not internally to a member within the hunt group. In the latter case, an unavailable indication is delivered to called IBN members, while the calling name, obtained from the proprietary name database, is delivered to MBS and EBS members.

Calling Number Delivery Blocking Override (CNDBO)

The CNDBO feature overrides the calling line identification (CLID) presentation restrictions at the terminating end of a call. The feature can be used for calls terminating on emergency services agents to display calling party numbers that are otherwise restricted. TCAP calling name delivery is not affected by the CNDBO feature.

Call Pickup (CPU) and Directed Call Pickup (DCPU)

The CPU feature allows an end user to pick up calls in a predefined call-pickup group by dialing an access code, and allows a station to answer incoming calls to another station within the same pickup group. The DCPU feature is similar to the CPU feature except that the pickup is done before the called party answers the call. With either of these features, the pickup party does not receive the TCAP calling name information.

Call Waiting (CWT)

The CWT feature allows an end user who is on the line, to receive a special call waiting tone when another call arrives. The end user places the current party on hold and answers the waiting call. TCAP calling name information is not delivered to IBN end users, but is delivered to MBS or EBS end users when the waiting call is answered.

Distinctive Ringing (DRING)

The DRING feature allows different ring patterns to be assigned to a business set on a line basis, or to be applied to different call types. TCAP calling name information is delivered to a Centrex terminating line with the DRING option.

Group Intercom All Calls (GIAC) and Group Intercom Call (GIC)

The GIAC feature allows a business set user, who is part of an intercom group, to page selected members of the group simultaneously, and establish conference with the paged members. The GIC feature allows a user to call a member of a predesignated intercom group using abbreviated dialing. TCAP calling name information is delivered for GIC calls terminating on an MBS or EBS, however, is not delivered for GIAC calls.

Feature Access Control

Feature Access Control allows MDC features, such as Name Display, Reason Display, and Calling Line Identification, to be assigned to a group of lines through the access feature group (AFG) mechanism. The TCAP calling name

delivery for MDC feature does not affect the name display capability provided by the AFG mechanism.

Hunt Groups

A hunt group is an end user-defined group of lines. When attempting to terminate a call to a busy line within that group of lines, the switch scans the group of lines sequentially and searches for an idle line on which to terminate the call. TCAP calling name information is displayed for hunt group members.

Multiple Appearance Directory Number (MADN)

The MADN feature allows a single DN to be associated with a group of end user lines. TCAP calling name information is not delivered to members of a MADN group even if the TCAPNM option applies to the customer group.

Multiswitch Business Group (MBG)

The MBG feature networking control implements a control mechanism on a customer group basis for a subset of the networked features available to calls using an MBG service. The network features that can be controlled are network name displayed (NAME) and network number and reason display (CLID).

Control of the CLID and NAME display features for a customer group is accomplished by the addition of option MBGDENY in table CUSTNTWK, which has two associated sub-options; CLID and NAME.

TCAP calling name information is not delivered to the called party for MBG calls over public ISUP trunks when the terminating switch has the option MBGDENY NAME or MBGDENY CLID NAME for the customer group. However, if the terminating line has both those options for the customer group as well as the CNDBO option, TCAP calling name information is delivered.

Name and Reason Display

The Name and Reason Display feature allows the calling party to obtain the name of the called party, and the called party to obtain the name of the calling party. Furthermore, the name in redirected calls is displayed, if it is available. The name is currently obtained from the proprietary name database. With the TCAP calling name delivery for MDC feature, TCAP calling name information is obtained from the centralized name database, while the called name and the redirected name, if available, are obtained from the proprietary name database.

Network Name Display

The Network Name Display feature extends the Name and Reason Display functionality across multiple nodes linked by a CCS7 network. With the TCAP

TCAP calling name delivery for MDC (continued)

calling name delivery for MDC feature, TCAP calling name information is obtained from the centralized name database, while the called name and the redirected name, if available, are obtained from the proprietary name database.

Ring Again (RAG)

The RAG feature allows an end user that calls a busy line to be notified once the line becomes idle. The same DN is automatically redialed and ringing is provided to the RAG end user. The TCAP calling name information is not delivered during ring again.

Selective Call Acceptance (SCA)

TCAP calling name information is delivered to the called party when the SCA option is invoked and the call is allowed to terminate, and the called party is within a customer group that has the TCAPNM option.

Selective Call Forwarding (SCF)

TCAP calling name information is delivered to a remote station when the called party has SCF, and the remote station is within a customer group that has the TCAPNM option.

Selective Call Rejection

TCAP calling name information is delivered to the called party when the called party is within a customer group that has the TCAPNM option, and the call is not rejected.

Spontaneous Call Waiting Identification (SCWID)

The SCWID feature allows the called party to obtain the TCAP calling name information in the off-hook state. TCAP calling name information is delivered to SCWID end users who have an appropriate CPE, such as theVista 350.

Spontaneous Call Waiting Identification with Disposition

The DSCWID feature is similar to the SCWID feature except that DSCWID has more options. TCAP calling name information is delivered to DSCWID end users who have an appropriate CPE, such as the Vista 350.

Teen Service (SDN)

An IBN end user with the TCAPNM and SDN options receives TCAP calling name information for those calls if the silent interval of the ring pattern used is equal to or greater than 3 seconds.

Three-Way Calling/Call Transfer (3WC) and Usage-Sensitive Three-Way Calling (U3WC)

The 3WC option allows an end user to add a third party to an existing connection or transfers the calling party to a second called party. The U3WC

TCAP calling name delivery for MDC (continued)

option allows an end user to add a third party to an existing connection. The called party receives TCAP calling name information of a call transfer or three-way call if the called party's CPE receives the TCAP query response before the calling party establishes the three-way call or call transfer. Refer to the following figure and call chaining description.

Three-Way Calling/Call Transfer description

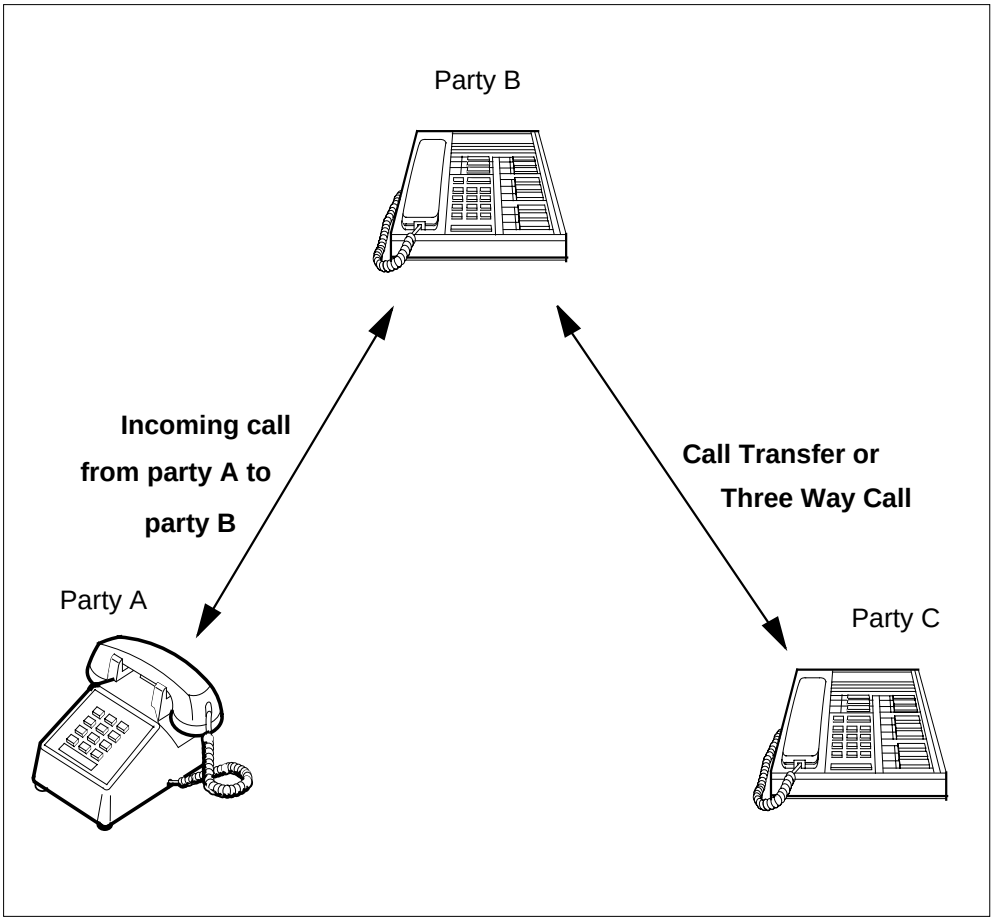

Call chaining description

Party A calls Party B.

If party B is an IBN agent, party B

- receives the TCAP calling name of Party A if the TCAP response arrives before party B answers
- does not receive the TCAP calling name of party A if the TCAP response arrives after party B answers

TCAP calling name delivery for MDC (continued)

If party B is an M5XXX agent, party B

- receives the TCAP calling name of Party A if the TCAP response arrives before party B answers
- receives the TCAP calling name of party A if the TCAP response arrives after party B answers. In this event, the display gets updated to show the calling name of party A.

Party B goes off hook, puts party A on hold, flashes, and dials party C.

If party C is an IBN agent, party C

- receives the TCAP calling name of party B if the TCAP response arrives before party C answers and party B does not establish the call transfer or 3WC
- does not receive the TCAP calling name of party B if the TCAP response arrives after party C answers or party B established the call transfer or 3WC

If party C is a M5XXX agent, party C

- receives the TCAP calling name of party B if the TCAP response arrives before party C answers and party B does not establish the call transfer or 3WC
- receives the TCAP calling name of party B if the TCAP response arrives after party C answers and party B does not establish the call transfer or 3WC. In this event, the display gets updated to show the calling name of party B.

Note: Party B establishes the call transfer or 3WC when party B flashes the second time.

Party C does not receive the TCAP calling name of party A because the conference or transfer is not a new call. Only new calls issue a TCAP query.

Uniform Call Distribution (UCD)

The UCD option evenly distributes incoming calls to a set of DNs in a UCD group. When a call is terminated to Centrex lines within a UCD group, TCAP calling name information is not delivered.

TCAP calling name delivery for MDC (continued)

Virtual Facility Group (VFG)

The translation for calls that route through VFGs is first done from the originating line or trunk to the incoming side of the VFG, and then from the outgoing side of the VFG to the terminating line or trunk.

Note: To use interLATA name query control (office parameter TCAPNM_INTERLATA_QUERY) for interLATA calls routing over a VFG, AR reverse translation must be datafilled correctly in order to obtain the dialable number of the calling party.

Action and deactivation by the user

TCAP calling name delivery for MDC does not require activation or deactivation by the user.

Billing

TCAP calling name delivery for MDC does not generate billing records or changes.

Station Message Detail Recording

TCAP calling name delivery for MDC does not require Station Message Detail Recording.

TCAP calling name delivery for MDC (continued)

Office parameters used by TCAP calling name delivery for MDC

The table that follows lists the office parameters used by TCAP calling name delivery for MDC. For additional information about office parameters, refer to the *Office Parameters Reference Manual*.

Office parameters used by TCAP calling name delivery for MDC

Table name	Parameter name	Explanation and action
OFCVAR	TCAPNM_ INTERLATA_ QUERY	Use this parameter to indicate whether interLATA calls to end users are to launch TCAP queries. Enter Y to have interLATA and intraLATA calls to end users launch TCAP queries. Enter N (default) to have only intraLATA calls to end users launch TCAP queries.
OFCVAR	TCPANM_BLK_ QUERY_PRIV_ DNS	Use this parameter to indicate whether the centralized name database is queried when: • no ISUP GN parameter is present in the IAM • the calling party number has a presentation status of Restricted Enter Y (default) to indicate that the centralized name database not be queried when the above two conditions are met. When set to Y, a Private indicator is sent to the CPE for the calling name. Enter N to indicate that the queries to the centralized name database not be dependent on the presentation status of the calling party's number.
OFCENG	KSET_INTER_ GRP_DISP	Use this parameter to indicate whether the information for calls arriving from outside the customer group is displayed on the terminating CPE. Enter Y to indicate that the information for calls arriving from outside the customer group be displayed, otherwise, enter N (default).
OFCENG	FTRQ8WAREAS	Use this parameter to allocate additional 8-word feature queue blocks for the TCAPNM for MDC feature. The value of this parameter is specified in units of 10 FTRQ8WAREAS blocks. The default value is 1, which represents an allocation of 10 FTRQ8WAREAS blocks.

TCAP calling name delivery for MDC (continued)

Datafill sequence

The table that follows lists the tables that require datafill to put TCAP calling name delivery for MDC into operation. You must enter data into the tables in this order.

Datafill requirements for TCAP calling name delivery for MDC

Table	Purpose of table
TCAPTRID	table TCAPTRID contains CNAMD as the TCAP application, and specifies the number of transaction IDs (TRID) required for the CNAMD application ***Note:*** Table TCAPTRID is obsolete. See Data Schema Reference Manual for details.
C7GTTYPE	table C7GTTYPE contains CNAMDGT as the Global title translation identifier (GTTID)
C7GTT	table C7GTT contains CNAMD as the subsystem name
C7LOCSSN	table C7LOCSSN contains CNAMD as the subsystem name
C7RPLSSN	table C7RPLSSN contains CNAMD as the subsystem name
C7NETSSN	table C7NETSSN contains the routeset of the SCP, and CNAMD as the subsystem name
RESOFC	table RESOFC contains CNAMD in the FEATNAME field, which indicates that CNAMD is enabled for the office (see Note 1)
CUSTNTWK	table CUSTNTWK contains TCAPNM in the OPTION field, which indicates the centralized name database will be queried rather than the proprietary name database.
CUSTHEAD	table CUSTHEAD contains the name delivery timeout period (1 to 6 seconds)
CUSTSTN	table CUSTSTN contains the NAMEDISP option for each customer group(see Note 2)

Note 1: The datafill in table RESOFC only affects IBN end users and not MBS or EBS end users.

Note 2: The datafill in table CUSTSTN only affects MBS and EBS end users and not IBN end users.

TCAP calling name delivery for MDC (continued)

Datafill related to TCAP calling name delivery for MDC for table TCAPTRID

The table that follows provides the datafill related to TCAP calling name delivery for MDC for table TCAPTRID. This table includes only those fields that apply directly to TCAP calling name delivery for MDC.

Note: Table TCAPTRID is obsolete. See Data Schema Reference Manual for details.

TCAP calling name delivery for MDC (continued)

Datafill related to table TCAPTRID

Field	Subfield	Entry	Explanation and action
TCAPAPPL		CNAMD	Transaction capability application. Enter CNAMD as the TCAP application that requires transaction IDs.
NUMTRIDS		Numeric with a maximum of 32,000 or 819	Number of transaction identifications. Enter the number of transaction IDs required by CNAMD. If office parameter MAX_NO_OF_TRANS_ID in table OFCENG is present, the maximum value is 32,000, otherwise, the maximum value is 819. The total number of TRIDs required for CNAMD is calculated for each switch. Some switch-dependent variables that must be considered when calculating the total number of TRIDs include: • CNAMD feature penetration, which is the total number of end users who are active CNAMD end users. It is not sufficient to count the total number of end users who have the CNAMD feature assigned to the line for switches that offer the CNAMD feature on a subscription usage sensitive price (SUSP) basis, which allows end users to activate and deactivate the CNAMD feature using an access code. • Switch call capacity, which is dependent on processor type (NT40 or SuperNode), and feature package content. • Calling name delivery blocking features, which do not require TRIDs since a TCAP query is not sent to retrieve the name from the centralized name database when the originating end user activates a blocking feature to restrict the display of the calling name. • TRID holding time, which is the total time between allocation and deallocation of a TRID. A TRID is allocated when a TCAP QWP package is sent to the centralized name database and is deallocated when the TCAP Response package is received.

TCAP calling name delivery for MDC (continued)

Datafill example for table TCAPTRID

The figure that follows shows sample datafill for table TCAPTRID.

Note: The component id allocation utility that table TCAPTRID provides is not used for CNAMD. Therefore, enter 0 in field NUMCOMPS. Entering anything above 0 increases the datastore requirements by 20 words for each component ID datafilled (for more details, refer to feature AN0232).

MAP example for table TCAPTRID

```
TCAPAPPL    NUMTRIDS      NUMCOMPS
---------------------------------------------------------
CNAMD       100            0
```

Datafill related to TCAP calling name delivery for MDC for table C7GTTYPE

The table that follows provides the datafill related to TCAP calling name delivery for MDC for table C7GTTYPE. This table includes only those fields that apply directly to TCAP calling name delivery for MDC.

Datafill related to table C7GTTYPE

Field	Subfield	Entry	Explanation and action
GTTID		CNAMDGT	Global title translation identifier. Enter CNAMDGT as the GTT identifier used by TCAP for Calling Name Delivery.

Datafill example for table C7GTTYPE

The figure that follows shows sample datafill for table C7GTTYPE.

MAP example for table C7GTTYPE

```
GTNAME         GTTYPE                              GTTID
---------------------------------------------------------
CNAMDGT       ANSI7 15            (            CNAMDGT) $
```

Datafill related to TCAP calling name delivery for MDC for table C7GTT

The table that follows provides the datafill related to TCAP calling name delivery for MDC for table C7GTT. This table includes only those fields that apply directly to TCAP calling name delivery for MDC.

Datafill related to table C7GTT

Field	Subfield	Entry	Explanation and action
GTTRSLT			Global title translation result. This field consist of subfield RESULT and refinements.
	RESULT	PCSSN	Result. Enter PCSSN as the global title translations result type.
	PCNAME	1 to 16 alphanumeric characters	Point code name. Enter a 1 through 16 character name to specify the point code name.
	SSNAME	CNAMD	Subsystem name. Enter CNAMD as the subsystem name.
	COST	0 to 99	Cost. Enter a value from 0 to 99 to specify the routing preference when there is no difference in cost for different routes.

Datafill example for table C7GTT

The figure that follows shows sample datafill for table C7GTT.

MAP example for table C7GTT

```
GTTKE                                                GTTRSLT
-------------------------------------------------------------
CNAMDGT   0   9  PCSSN    (C7RTESET2  CNAMD 0)  $   SSN
```

TCAP calling name delivery for MDC (continued)

Datafill related to TCAP calling name delivery for MDC for table C7LOCSSN

The table that follows provides the datafill related to TCAP calling name delivery for MDC for table C7LOCSSN. This table includes only those fields that apply directly to TCAP calling name delivery for MDC.

Datafill related to table C7LOCSSN

Field	Subfield	Entry	Explanation and action
SSNAME		CNAMD	Subsystem name. Enter CNAMD as the subsystem name.

Datafill example for table C7LOCSSN

The figure that follows shows sample datafill for table C7LOCSSN.

MAP example for table C7LOCSSN

```
SSNAME  SSNUMBER     MINIST    REPLINFOR   TFMI   PCNAMES
---------------------------------------------------------
CNAMD    240         1          N           N      $
```

Datafill related to TCAP calling name delivery for MDC for table C7RPLSSN

The table that follows provides the datafill related to TCAP calling name delivery for MDC for table C7RPLSSN. This table includes only those fields that apply directly to TCAP calling name delivery for MDC.

Datafill related to table C7RPLSSN

Field	Subfield	Entry	Explanation and action
SSNAME		CNAMD	Subsystem name. Enter CNAMD as the subsystem name.

Datafill example for table C7RPLSSN

The figure that follows shows sample datafill for table C7RPLSSN.

TCAP calling name delivery for MDC (continued)

MAP example for table C7RPLSSN

```
SSNAME                                          REPLIST
---------------------------------------------------------
CNAMD                        (C7RTESET1  C7RTESET2  N)   $
```

Datafill related to TCAP calling name delivery for MDC for table C7NETSSN

The table that follows provides the datafill related to TCAP calling name delivery for MDC for table C7NETSSN. This table includes only those fields that apply directly to TCAP calling name delivery for MDC.

Datafill related to table C7NETSSN

Field	Subfield	Entry	Explanation and action
SSNAME		CNAMD	Subsystem name. Enter CNAMD as the subsystem name.

Datafill example for table C7NETSSN

The figure that follows shows sample datafill for table C7NETSSN.

MAP example for table C7NETSSN

```
PCNAME                                              SSNAME
---------------------------------------------------------
C7RTESET7                                       (CNAMD 15) $
```

TCAP calling name delivery for MDC (continued)

Datafill related to TCAP calling name delivery for MDC for table RESOFC

The table that follows provides the datafill related to TCAP calling name delivery for MDC for table RESOFC. This table includes only those fields that apply directly to TCAP calling name delivery for MDC.

Note: The datafill in table RESOFC only affects IBN end users, not MBS and EBS end users.

Datafill related to table RESOFC

Field	Subfield	Entry	Explanation and action
KEY			Key. This field consists of subfield FEATNAME.
	FEATNAME	CNAMD	Feature name. Enter CNAMD as the feature name.
ENABLED		Y or N	Enabled. Enter Y to enable CNAMD in the office, otherwise enter N.
FEATDATA	ACCESS	SUBSCR	Feature access. Enter SUBSCR, which is the only valid value for CNAMD to indicate that the feature is accessed through subscription.
	FEATNAME	CNAMD	Feature name. Enter CNAMD as the feature name.

Datafill example for table RESOFC

The figure that follows shows sample datafill for table RESOFC.

MAP example for table RESOFC

```
KEY         ENABLED                                FEATDATA
------------------------------------------------------------
CNAMD       Y            SUBSCR                     CNAMD
```

Datafill related to TCAP calling name delivery for MDC for table CUSTHEAD

The table that follows provides the datafill related to TCAP calling name delivery for MDC for table CUSTHEAD. This table includes only those fields that apply directly to TCAP calling name delivery for MDC.

Datafill related to table CUSTHEAD

Field	Subfield	Entry	Explanation and action
OPTION		NDTIMOUT	Option. Enter NDTIMOUT.
	NDTIMER	1 to 6 seconds	Name delivery timer. Enter a value from 1 to 6 seconds to specify the time a call is suspended while waiting for the calling party's name to return to the terminating node. The default value is 3 seconds.

Datafill example for table CUSTHEAD

The figure that follows shows sample datafill for table CUSTHEAD.

MAP example for table CUSTHEAD

```
CUSTNAME  CUSTXLA   DGCOLNM   IDIGCOL          OPTIONS
---------------------------------------------------------
MDCGRP    MDCXLA     MDC       NIL       (NDTIMOUT 4) $
```

Datafill related to TCAP calling name delivery for MDC for table CUSTNTWK

The table that follows provides the datafill related to TCAP calling name delivery for MDC for table CUSTNTWK. This table includes only those fields that apply directly to TCAP calling name delivery for MDC.

Datafill related to table CUSTNTWK

Field	Subfield	Entry	Explanation and action
OPTIONS		TCAPNM	Options. Enter TCAPNM to indicate that the centralized name database be queried rather than the proprietary name database.

Datafill example for table CUSTNTWK

The figure that follows shows sample datafill for table CUSTNTWK.

TCAP calling name delivery for MDC (continued)

MAP example for table CUSTNTWK

```
CUSTNAME   NETNAME   NETCGID   DNREVXLA         OPTIONS
---------------------------------------------------------
MDCGRP     PUBLIC     0  $   (CLID OFFNET)     (TCAPNM) $
```

Datafill related to TCAP calling name delivery for MDC for table CUSTSTN

The table that follows provides the datafill related to TCAP calling name delivery for MDC for table CUSTSTN. This table includes only those fields that apply directly to TCAP calling name delivery for MDC.

Note: The datafill in table CUSTSTN only affects MBS and EBS end users, not IBN end users.

Datafill related to table CUSTSTN

Field	Subfield	Entry	Explanation and action
OPTNAME		NAMEDISP	Option name. Enter NAMEDISP as the option name.
OPTION		NAMEDISP	Option. Enter NAMEDISP as the option for the customer group.

Datafill example for table CUSTSTN

The figure that follows shows sample datafill for table CUSTSTN.

MAP example for table CUSTSTN

```
CUSTNAME        OPTNAME                          OPTION
---------------------------------------------------------
AIN1MBS         NAMDISP                         NAMEDISP
```

Translation verification tools

TCAP calling name delivery for MDC does not use translation verification tools.

SERVORD

The service order (SERVORD) utility is used to add, delete, or change the CNAMD feature on end user lines.

Note: The CNAMD feature can be enabled in table RESOFC after adding the feature to IBN end user lines. This enables the feature for all end users simultaneously.

SERVORD limitations and restrictions

TCAP calling name delivery for MDC has no SERVORD limitations or restrictions.

SERVORD prompts

The table that follows provides the SERVORD prompts used to add the CNAMD option to a line.

SERVORD prompts for TCAP calling name delivery for MDC

Prompt	Correct input	Explanation
DN_OR_LEN	7-digit DN	Enter the 7-digit DN to which the CNAMD option is to be assigned.
OPTION	CNAMD	Enter CNAMD to assign the CNAMD option to the line.

SERVORD example to add CNAMD to IBN lines

The SERVORD example that follows shows how to add the CNAMD option to an IBN line with the ADO command in prompt mode.

TCAP calling name delivery for MDC (end)

SERVORD example for TCAP calling name delivery for MDC in prompt mode

```
>servord
SO:
> ADO
SONUMBER: NOW 98 11 28 PM
>
DN_OR_LEN:
> 6211061
OPTION:
> CNAMD
OPTION:
> $
COMMAND AS ENTERD:
ADO NOW 98 11 28 PM 6211061 (CNAMD) $
ENTER Y TO CONFIRM, N TO REJECT OR E TO EDIT
> y
```

The SERVORD example that follows shows how to add the CNAMD option to an IBN line with the ADO command in no-prompt mode.

SERVORD example for TCAP calling name delivery for MDC in no-prompt mode

```
> ado $ 6211061 cnamd $
```

Virtual Access to Private Networks

Ordering codes

Functional group ordering code: MDC00006

Functionality ordering code: does not apply

Release applicability

BCS31 and later versions

Requirements

To operate, Virtual Access to Private Networks has the following requirements:

- BAS Generic, BAS00003
- MDC Minimum, MDC00001

Note: Feature package NTXJ42AA does not include options like Station Message Detail Recording (SMDR) and account and authorization codes. Order these options separately.

Required packages for the EAEO and AT

A Virtual Access to Private Networks (VAPN) node receives trunks from an equal access end office (EAEO) or an access tandem (AT). For the EAEO and AT, special software is not a requirement to support connection to a VAPN node. The only requirement is that the network node that signals the VAPN node must support feature group D (FGD).

As a minimum requirement for MF FGD, an end office (EO) must have feature package NTX186AA. An additional minimum requirement for ISUP FGD is feature package NTXE13AB. As a minimum requirement for MF FGD, an AT must have feature package NTX386AA. An additional minimum requirement for ISUP FGD is feature package NTXE14AB.

Optional packages

If feature package NTX412CA is in the VAPN node, Customer Data Change (CDC) end users can access table CGNSCRN. These end users access table CGNSCRN through the partitioned table editor. Enter data for Customer Data Change access to table CGNSCRN through table DNOWN (Directory Number Owner).

Description

The VAPN allows the DMS-100 switch to accept an incoming FGD call. The VAPN allows the switch to screen this call in a database by the automatic number identification (ANI) of the call. The VAPN allows the switch to assign

Virtual Access to Private Networks (continued)

a customer group and a network class of service (NCOS) to the call. This event occurs before the switch routes the call. Virtual Access Private Network is a preprocessing stage for an incoming IBN trunk group.

Table CGNSCRN (Calling Number Screening) contains the database and indicates the set of ANIs accepted as incoming VAPN calls. This table indicates, for each ANI or range of ANIs, the customer group and NCOS to assign to a call from that ANI. This table specifies if a request for an account code or authorization code, or both codes, must occur.

The other end of the FGD trunk group connects to an EAEO or AT with a trunk type of access to carrier (ATC). A trunk group like this trunk group normally connects to a carrier. The VAPN allows the DMS-100 switch to function as a carrier.

You can specify if the system expects ANI digits for each trunk group. You can specify if the system screens these digits in the database. If the system does not perform screening, the system accepts all incoming calls. The system uses the customer group and NCOS for the trunk to route the calls.

A special SMDR record can record VAPN call ANIs. The system produces this record in addition to the normal SMDR record for incoming trunks. Trunk signaling can be digital trunk signaling multifrequency (MF) or integrated services digital network user part (ISUP). For MF, the system only supports pure dialing. Pure dialing is not cut-through. The FGD trunk type cannot generate outgoing FGD calls. The FDG trunk type can be in use as a standard outgoing IBN trunk type. The central offices that send VAPN calls to the VAPN node must be ATs or EAEOs. A VAPN node is a DMS-100 switch loaded with VAPN software.

An example of a VAPN appears in the following figure.

Virtual Access to Private Networks (continued)

Virtual Access to Private Networks

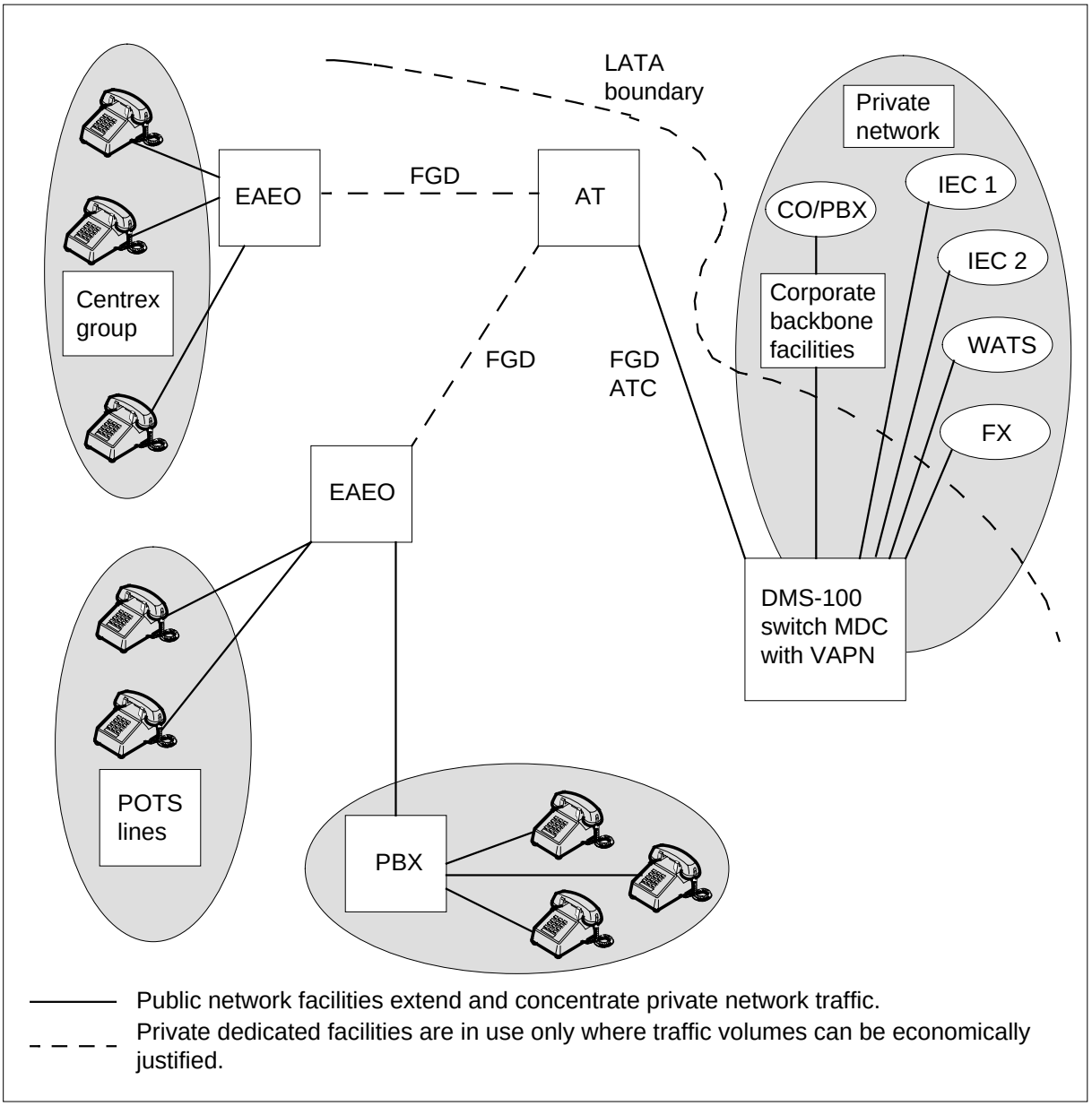

Operation

The operation of Virtual Access to Private Networks appears in the following paragraphs.

Equal access

Equal access (EA) supplies carriers with equal treatment and access to end users for completing inter-LATA and international calls. End users can dial the

Virtual Access to Private Networks (continued)

carrier to use. End users can rely on a presubscribed carrier that is the primary interexchange carrier (PIC). This feature description assumes that the end user knows EA.

Feature group D signaling

The FGD signaling is a recent form of signaling that supports EA. A FGD dialing scheme is also available. Dialing is not important to VAPN because the number the end user dials can change. This number can change before the VAPN DMS-100 switch receives the number the end user dials as inpulsing.

The name FGD applies to the multifrequency (MF) signaling version of carrier access. This term does not apply to the ISUP signaling version. The MF carrier access signaling differs from normal intra-LATA signaling. The difference is that the system transmits the ANI as a separate sequence of digits. This MF carrier access signaling is the MF FGD.

Integrated services digital network user part carrier access signaling (TR-TSY-000394) is a superset of intra-LATA signaling (TR-TSY-000317). This signaling transmits additional information intra-LATA signaling does not require.

Note: The TR-TSY-000394 does not use the name FGD for ISUP carrier access.

Virtual Access to Private Networks and FGD

The VAPN uses normal FGD signaling. The VAPN accepts incoming FGD calls. The VAPN screens the ANI in a database on the switch. The VAPN performs this action before allowing the call to route any more. The screening verifies that the ANI is preauthorized. The screening assigns the customer group and NCOS that were specified for that ANI.

The following points differentiate between FGD and VAPN:

- The AT or EO sends normal ATC FGD signaling to what the AT or EO records as a carrier. The carrier is in fact a DMS-100 switch with VAPN software.
- The VAPN node receives this FGD signaling. The VAPN maps the ANI to a customer group and NCOS. The VAPN does not use this FGD signaling for billing like a carrier uses this signaling for billing.

The FGD is a signaling protocol. The VAPN is a software feature that uses that protocol. A VAPN node cannot outpulse FGD signaling. A VAPN node originates or tandems FGD calls when the VAPN node is an EAEO.

Virtual Access to Private Networks (continued)

Network example

The FGD defines a set of interconnection rules between EO access facilities and interexchange and international carriers. This action is the EA scheme under which the system treats all carriers in the same method. The FGD provides the following to the carrier:

- routing to the point-of-presence (POP) of the carrier of non-intra-LATA calls. These calls can select the carrier explicitly when the dialing of a carrier access code (CAC) occurs. These calls can select the carrier implicitly through a PIC.
- passing of dialed digits, ANI, and other information to the carrier. This information allows routing, screening, and billing of the call.

The VAPN allows a DMS-100 switch or DMS-100/200 switch to accept FGD signaling. These switches can function like a carrier to other offices. The system can substitute a DMS-100 switch for a carrier. The DMS-100 switch must be one of the following:

- a node in a private network of leased trunks
- a host of a private branch exchange (PBX) in a private network with dedicated facilities

The AT or EC treats the VAPN service as a carrier for direct connection.

An example of a VAPN node that functions like a carrier appears in the following figure.

Virtual Access to Private Networks (continued)

The VAPN node that functions like a carrier

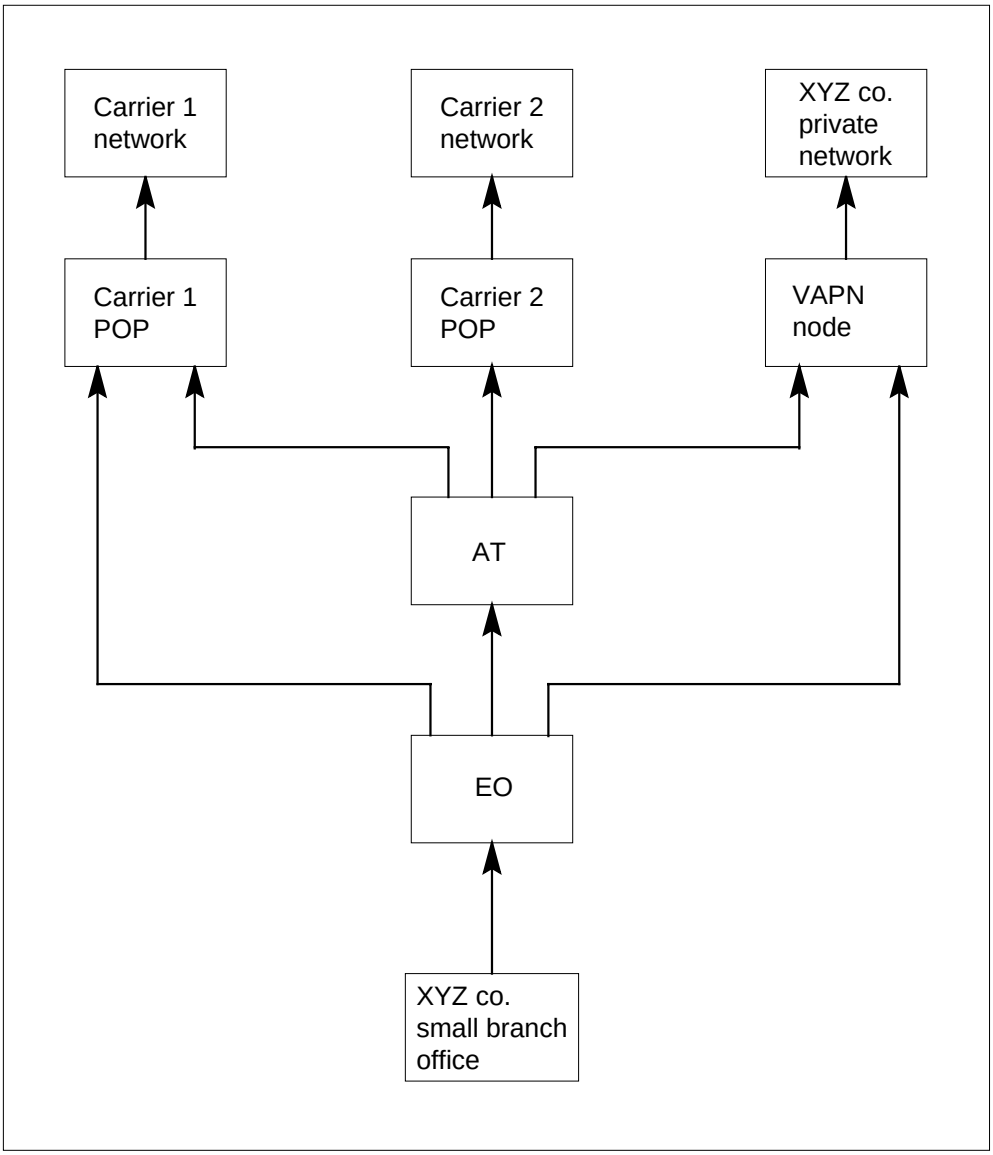

The following items appear in the preceding figure:

- To presubscribe terminals (telephones) at the XYZ Co. branch to carrier 1 or 2, or to VAPN service, assign the VAPN CAC as the PIC.
- The system routes all long-distance calls from XYZ Co. to the specified carrier or VAPN node.
- The VAPN node and carriers must interconnect with an AT or EO. This interconnection occurs with the use of FGD.

- The system can handle calls in the private network to completion. The system can route the calls to the public network.
- The VAPN node can accept calls from an AT. The VAPN can accept calls from an EO with enough VAPN traffic to justify a direct link to the VAPN node.

Capabilities

The VAPN feature provides the following capabilities:

- Carrier emulation accepts incoming FGD signaling in MF or ISUP format.
- Table CGNSCRN determines the treatment of each ANI. An ANI or a range of ANIs indexes this table. This table is on the VAPN node.
- The ANI screening specifies that specified ANIs can use the VAPN service. Calls with ANIs that fail screening receive a different treatment. The system generates a different log report for each call.
- Authorization codes or account codes, or both codes, specify the ANIs that prompt. A call occurs with the CAC for the VAPN node.
- The assignment of private network membership can occur to incoming calls to a customer group and NCOS. The ANI of the calls determines this assignment. The MDC customer group translations routes the calls.
- The system can output a second SMDR record with the ANI of the call for each VAPN call. The VAPN office parameter specifies if the system must output this record. The SMDR record is in addition to the normal trunk group record.

Characteristics

The VAPN feature provides the following characteristics:

- The VAPN is built on top of the local and MDC software packages. The VAPN can be in use on DMS-100 switches or DMS-100/200 switches with MDC.
- The VAPN supports incoming or two-way FGD trunks using MF and ISUP signaling.
- The VAPN accepts incoming calls with FGD signaling only. The incoming calls can be MF or ISUP. The VAPN does not accept other forms of signaling. These other forms of signaling include intra-LATA, MF feature group B (FGB) or TR-TSY-000317 ISUP.
- The VAPN supports only pure dialing. The VAPN does not support cut-through dialing.

Virtual Access to Private Networks (continued)

- The VAPN does not affect the end user dialing plan. You can set up any dialing plan at an EO. The end user at the EO can have Centrex or plain old telephone service (POTS).
- The presence or absence of an AT in the path from the EO does not affect VAPN.

  Note: The presence of an AT determines signaling from the EO. An EO can connect to a carrier or to a VAPN node. When this event occurs, signaling from the EO is like AT signaling.

- The VAPN does not support origination or tandeming of FGD calls. A VAPN node cannot accept an incoming FGD call and tandem the call to an AT or a carrier. The VAPN supports this capability if the VAPN node is an EAEO.
- The system can tandem the ANI incoming on an ISUP FGD trunk to outgoing calls. This event occurs if the VAPN node is an EAEO. These outgoing calls include intertoll (IT) or ATC trunk calls. The system can send the ANI to lines on the VAPN node that can use the ANI. These lines include integrated services digital network (ISDN) lines and lines with display sets.
  - BCS31 only - The system cannot tandem the ANI incoming on an MF FGD trunk to an outgoing trunk. This ANI cannot appear on display sets.
  - BCS32 and later versions - The system can tandem the ANI on an incoming MF FGD trunk to the outgoing IT or ATC trunks. This event occurs if the VAPN node is an EAEO. The ANI is in use as the calling line identification (CLI) for lines on the VAPN node. The system can tandem the ANI to any trunk that can carry the ANI. These trunks include ISUP IBN trunks and primary rate interface (PRI) trunks.
- In BCS32 and later versions, access to table CGNSCRN can occur with the use of the partitioned table editor. This table editor is in the CDC system. Table CGNSCRN is the VAPN screening table. Table DNOWN controls the access to table CGNSCRN.
- The VAPN does not screen or verify the information digits or the ISUP equivalent. The ISUP equivalent is the originating line information [OLI] parameter, that the system receives with the ANI. The VAPN node only verifies that the ANI is complete and contains ten digits.
- The system supports direct-dial calls on FGD. The system does not support operator-assisted calls.

Virtual Access to Private Networks (continued)

Access

The VAPN allows access to a private network from an EO. This EO does not have enough members to justify a customer group and dedicated trunking. This private network access is offnet access.

Several EOs funnel VAPN calls to an AT. The number of offnet members of a private network in a LATA can justify the following:

- a customer group
- dedicated trunking at the VAPN node

An end user can be an offnet member of a private network. This end user is presubscribed to the CAC for the VAPN node or for the private network.

The other important application of VAPN is the access to resources available at a central node. These resources are available to end users on other nodes in the LATA. Examples of this application are foreign exchange (FX) and outward wide area telephone service (OUTWATS) lines. These examples appear in figure VAPN. For these services, the reduction of total provisioning can occur. The gathering of traffic over the complete LATA can cause the reduction of total provisioning.

Access to a private network

The private network can contain one of the following nodes or both of the following nodes:

- leased trunks between public network nodes. One node is the VAPN node.
- dedicated trunks between private network nodes. These nodes are PBXs. The VAPN node subtends one of these nodes.

The private network can carry national or international traffic. An example of this network is a Meridian switched network (MSN).

An offnet end user is an end user that is not part of the private network. An offnet end user can perform the following actions to become a member of a private network:

- make the VAPN node part of the private network
- presubscribe the end user to the CAC for the VAPN node or to the end user group
- set up an abbreviated dialing plan that is like the on-net dialing plan, like 8+RNX+XXXX, for that end user
- enter the ANI of the end user in the screening database of the VAPN node
- set up translations in the VAPN node for the customer group and NCOS

Virtual Access to Private Networks (continued)

- optionally arrange for calls to overflow the private network to the public network
- not use the presubscription PIC. In this condition, the end user must explicitly dial the CAC of the private network.
- use a 1+700+RNX+XXXX dialing plan, where the seven dialed digits are a private network node number and an extension number.

The use of POTS or Centrex service determines the dialing plan for a VAPN end user.

Access to the public network through carriers

The applications that appear in this section are only possible if the VAPN node is also an EAEO. The combined node must have VAPN and EAEO software loaded. This section contains the tandeming of VAPN calls to carriers for termination. This section does not contain tandeming in the local LATA. The VAPN is important to tandem calls to carriers for termination.

With a VAPN and EAEO configuration, the DMS switch can support FGD signaling. The DMS switch can support FGD signaling in incoming and outgoing directions. The incoming direction is through VAPN. The outgoing direction is through EAEO. The DMS switch cannot support FGD signaling on the same trunk group for carrier calls. Equal access translations provide the interface between incoming VAPN and FGD-to-carrier outgoing trunk groups.

In BCS31, the system tandems ANI through the DMS switch only for incoming ISUP VAPN calls. In BCS32 and later versions, the system tandems the ANI for MF and ISUP VAPN calls.

Applications of VAPN for access to the public non-intra-LATA network include the following:

- The VAPN node translates dialed digits to a public network address. The VAPN translates dialed digits in an abbreviated dialing plan. The VAPN routes the call over the public network.
- The VAPN node serves as an OUTWATS concentrator. The VAPN provides OUTWATS service to several EOs. The VAPN saves wide area telephone service (WATS) trunks.
- The VAPN node routes calls back to the AT. A private network that the VAPN serves cannot handle these calls. These calls includes international or public network calls.

The combined VAPN and EAEO node can have direct trunks to a carrier. When this condition occurs, this node can redirect traffic to that carrier. The

node does not use the AT to perform this action. This condition appears in the following figure.

Change in direction of carrier-handled calls

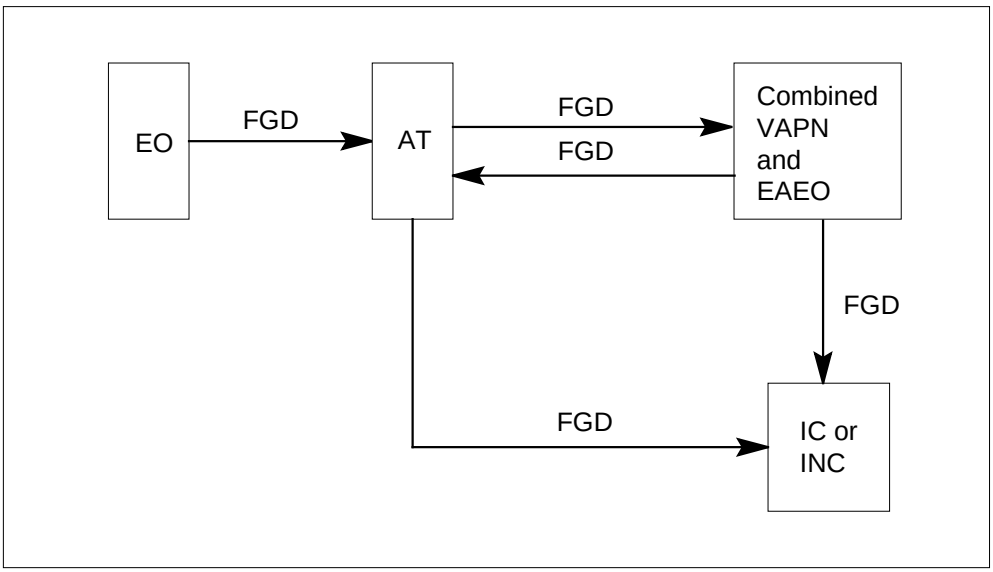

Summary of VAPN call processing

A summary of the parts of the VAPN system in the VAPN node appears in this section. Inputs, processing, outputs and other parts that do not relate to call processing are in this section.

Inputs

The VAPN node includes the following types of inputs:

- VAPN call - A VAPN call arrives on a trunk group entered as FGD, on a DMS-100 switch or DMS-100/200 switch with Centrex. The call normally includes ANI, information digits, and called digits.
- Account or authorization code - The translations at the VAPN node can be set up so that the end user must enter an account or authorization code.

Processing

The VAPN node includes the following types of processing:

- Software - The end user must load the VAPN node with the VAPN software package.
- Translations - The tables in the VAPN node that are important to VAPN must contain data. Tables CGNSCRN and DNOWN are different for VAPN operation. Translations affects table TRKGRP (Trunk Group).

Virtual Access to Private Networks (continued)

Outputs

The VAPN node includes the following types of outputs:

- Prompt for account code - The VAPN node can issue a prompt to the end user to enter an account or authorization code. This event occurs if the arrangement in translations specifies this condition.
- Customer group and NCOS - With table CGNSCRN, the VAPN node determines if the ANI is correct. The VAPN node assigns a customer group and NCOS to each incoming call. An option allows you to turn screening off for each trunk group.
- Treatments - Access of a treatment can occur when the VAPN node detects a call that is not correct. The creation of a special treatment occurs for the condition where ANI fails screening. This treatment is ANI database failure (ADBF).
- Logs - The system produces a special log when the access of ADBF treatment occurs.
- Billing records - The system can output an additional SMDR record for an incoming VAPN call. The record contains the ANI and not the called number.
- Operational measurements - The VAPN does not have different operational measurements (OM). The VAPN increases current OMs as appropriate for an incoming IBN trunk call.
- Further translations - After VAPN processing, the system sends the call to IBN trunk translations. The assigned customer group and NCOS or the customer group and NCOS of the incoming trunk, if you turn screening off, determines translations.

Other

The VAPN node includes the following parts that do not relate to call processing:

- Table editor - The table editor can change datafill.
- Translation verification - The VAPN feature extends translation verification (TRAVER) tools to handle VAPN calls. These tools include a prompt for ANI digits.
- The DMSMON (DMS monitor) DBLOCKS (digit blocks) command extends to monitor the table size of table CGNSCRN.
- Customer Data Change - In BCS32 and later versions, the partitioned table editor in the CDC feature package can change the datafill in table CGNSCRN. Table DNOWN contains the ownership of this table.

FGD signaling configuration supported

The following rules are important in determining the possible signaling configurations for EO-to-VAPN node connection.

- The VAPN node supports incoming FGD signaling on MF and ISUP trunks.
- The AT also supports incoming FGD signaling on MF and ISUP trunks.
- The AT supports outgoing FGD signaling on MF and ISUP trunks.
- The EO supports outgoing FGD signaling on MF and ISUP trunks.
- The AT can tandem incoming FGD signaling in MF FGD or ISUP FGD outgoing trunks. The FGD signaling can be MF or ISUP.
- The AT is not a requirement. The EO can have direct connection to the VAPN node.

The six possible signaling configurations that VAPN supports does appears in the following figure.

Signaling configurations

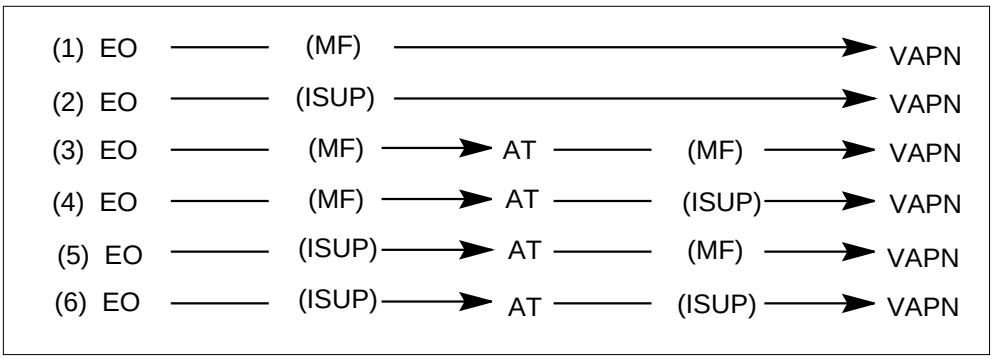

Protocols received at VAPN node

Six possible signaling configurations appear in the signaling configurations figure. The reception of only three different protocols can occur at the VAPN node. These protocols include the following protocols:

- MF FGD signaling - configurations (1), (3), and (5)
- ISUP TR-TSY-000394 signaling without circuit reservation messages (CRM) or circuit reservation acknowledgement (CRA) messages - configurations (2) and (6)
- ISUP TR-TSY-000394 signaling with CRMs and CRA messages - configuration (4)

Virtual Access to Private Networks (continued)

See “Integrated services digital network user part trunk signaling" in this feature description for details on CRMs and CRA messages.

Trunk types

The trunk types on both ends of FGD trunks can be different. This condition appears in the following figure. These trunk types appear for the condition in which the EO and AT are Northern Telecom (Nortel) DMS-100 switch Family central offices.

Trunk types between nodes

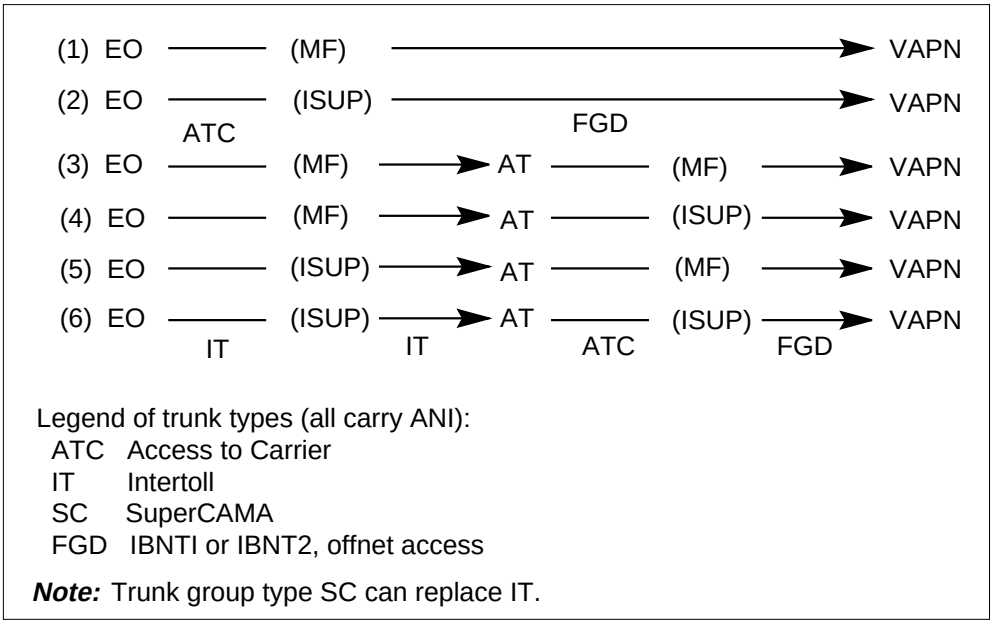

Trunk groups and CAC for VAPN

The CAC is a three-digit code that selects a carrier. The carrier can be explicitly dialed (10XXX+) or assigned as a PIC.

BCS31

The following factors determine the customer group and NCOS for routing a specified call:

- call type - if the call is in or out of world zone 1 (WZ1)
- datafill - if the VAPN screens the ANI of the call

Virtual Access to Private Networks (continued)

Call type and datafill determine the source of the customer group and NCOS. This condition causes the following rules for incoming FGD trunk groups and CACs for VAPN:

- If a VAPN node accepts calls in WZ1 FGD, that VAPN node requires the following for all end-users:
  - one incoming VAPN trunk group from each AT or EO that connects to the trunk group
  - one CAC for the node
- If a VAPN node accepts calls out of WZ1 calls for a specified private network, that private network requires the following:
  - one dedicated incoming VAPN trunk group from each AT or EO that connects to the VAPN node and serves the private network
  - one CAC different in the LATA of the VAPN node

A different CAC for international private network access can be in use again from the LATA in question.

BCS32 and above

In BCS32 and later versions if the call type does not determine the assignment of the customer group and NCOS. The call is in WZ1 or out of WZ1.

A CAC must be assigned for VAPN service at each EAEO and AT that carries traffic into the VAPN node. If each LATA has one VAPN node, one CAC can be in use across the network for VAPN. Which EAEO or AT that the traffic passes to determines the carrier to which the system directs traffic. The carrier is the VAPN node.

The customer group and NCOS in use for the translations of a specified call determine if VAPN screens the ANI of the call. Datafill in table TRKGRP determines the presence or absence of ANI screening.

If screening is on, the end user group uses the ANI of the call to segregate incoming traffic. Traffic from different end user groups can combine on the same trunk group without restrictions. The specified trunk group on which a VAPN call arrives is not important. The ANI determines the customer group and NCOS for the call. Table CGNSCRN defines the customer group and NCOS for the call.

If screening is off, the end user group cannot segregate incoming traffic by ANI. The end user uses the trunk group on which the traffic arrives to segregate the traffic. In some conditions, division by an end user group must

Virtual Access to Private Networks (continued)

occur. In these conditions, each end user group must have a separate and dedicated trunk group at the VAPN node.

Call types supported

Called digits that an AT or EO sends out to a carrier are from dialed digits. The called digits are the dialed digits without the prefix digits like 1 or 011. The VAPN feature does not check if the digits received are correct. The VAPN only verifies the number of digits received. If the called digits received do not match one of the forms, the call fails and receives treatment.

The IBN trunk translations check that the dialed digits are correct and that the system can route the call. The IBN trunk translations take over after VAPN processing is complete. If the set up of translations does not allow translations to handle one of the call types, that call type fails. This call type receives treatment.

All the call types the system supports are direct-dial only. The system does not support operator-assisted calls. The end user normally dials a 0- call with 10XXX+0- or 00-.

The set of correct called digits for incoming VAPN trunks appears in the following table.

Note: What the end user does dial is different. The EO datafill determines the number that the end user dials. What the end user does dial at the EO is not important to VAPN.

Supported VAPN call types (Sheet 1 of 2)

Call type	Digits	
National	XXX-XXXX	(7 digits)
	XXX-XXX-XXXX	(10 digits)
International (in the WZ1)	XXX-XXXX	(7 digits)
	XXX-XXX-XXXX	(10 digits)

Note 1: The X indicates any digit from 0 to 9.

Note 2: The system can transmit an ISUP 0- call as zero called digits. This condition occurs because other codes in the ISUP message indicate the call type.

Virtual Access to Private Networks (continued)

Supported VAPN call types (Sheet 2 of 2)

Call type	Digits	
International (out of WZ1)	XXXXXXX...XX	(7 to 12 digits, includes country code)
Operator/attendant	0	(0-)
	zero digits	(0- for ISUP)

Note 1: The X indicates any digit from 0 to 9.

Note 2: The system can transmit an ISUP 0- call as zero called digits. This condition occurs because other codes in the ISUP message indicate the call type.

Outgoing use of FGD trunks

A trunk group of type IBNT2 (IBN two way), can have FGD. When this condition occurs, that trunk group can be in use in the outgoing direction as a standard IBN trunk group. The outgoing direction is back to the AT or EO. The outgoing trunk is an IT or ATC trunk group type. The outgoing trunk cannot be in use for outgoing FGD traffic. The outgoing IBN trunk group can be in use for calls that terminate in the LATA of the VAPN node. Datafill must specify this condition.

Note: Even if the VAPN node is an EO, the outgoing direction of the VAPN trunks cannot be in use as FGD originating trunks.

ANI tandeming and display

The VAPN uses the ANI received on a VAPN trunk for screening in table CGNSCRN. The VAPN also uses the ANI to generate the additional SMDR record. This condition occurs if screening is active.

The ANI is also available for the following purposes:

- to outpulse as ANI when the system tandems incoming VAPN calls through a combined VAPN and EAEO node to outgoing IT or ATC trunks

  Note: In BCS31, the system tandems the ANI to the outgoing trunk if the incoming trunk is an ISUP trunk. In BCS32 and later versions, the

Virtual Access to Private Networks (continued)

system can tandem the ANI to the outgoing trunk. This event can occur if the incoming trunk is an ISUP trunk or an MF trunk.

- to outpulse as CLI on trunks that can carry CLI, like ISDN PRI trunks and ISUP IBN trunks

  Note: In BCS31, only ISUP trunks can use the ANI for CLI. In BCS32 and later versions, ISUP and MF trunks can use the ANI for CLI.

- to display on terminals (telephone sets) that have displays, like Meridian business sets (MBS) and residential telephone switch displays

  Note 1: In BCS31, the ANI can be in use for display if the incoming trunk is an ISUP trunk. The ANI cannot be in use for display if the incoming trunk is an MF trunk. In BCS32 and later versions, the ANI can be in use for display if the incoming trunk is an ISUP trunk or an MF trunk.

  Note 2: A called party number and a charge number can be available. The value of the calling number display cannot match the ANI for VAPN. See “Integrated services digital network user part trunk signaling" in this feature description for details.

The ISUP trunk has an address presentation restricted indicator in the calling party number (CPN) parameter of the initial address message (IAM). This indicator can restrict the display of the ANI.

End user dialing

The end user dialing plan or the EO translations do not affect the VAPN feature. This condition applies if the signaling the VAPN node receives does conform to VAPN rules.

The options at the EO include the following:

- use of a PIC
- Centrex or POTS service
- seven-digit abbreviated, ten-digit North American, 1+700+RNX+XXXX, or international dial plan
- FGB or FGD dialing

The standard EAEO dial plan appears in the following table. The called digits that the VAPN node normally receives also appear in this table.

EAEO dial plan

Digits end user dials	Called digits VAPN node receives	
1 + 7D	7D	(in WZ1)
1 + 10D	10D	(in WZ1)
10XXX + 1 + 7D	7D	(in WZ1)
10XXX + 1 + 10D	10D	(in WZ1)
10XXX + 0-	0	(in/out of WZ1)
011 + CC + NN	CC + NN	(international)
10XXX + 011 + CC + NN	CC + NN	(international)

Multifrequency trunk signaling

Multifrequency trunk signaling appears in the following section.

Overview

The MF signaling a VAPN trunk receives has two to three phases. Each phase contains two or more MF digits. Each phase starts with a key pulse (KP) digit and ends with an signaling terminal (ST) digit. Between these two digits are other digits. These other digits are divided in parts or fields of digits.

The VAPN signaling features appear in the following sections.

Call parts

Some parts on an MF call are always available. Some parts are optional. The call type can determine parts. In the following descriptions, X represents any digit from 0 to 9. The N represents any digit from 2 to 9.

Virtual Access to Private Networks (continued)

International parts

The following parts of a FGD call are always present for a call out of WZ1. These parts do not have to be present for an international call in WZ1. Datafill at the AT or EO determines this condition.

- 1NX - This part identifies the international system routing code. One code is for each type of call routing. The VAPN only checks that the first digit of the code is 1. The system does not support operator-assisted calls.
- XXX - This part identifies the dialed, or presubscribed, carrier code. The VAPN ignores this part.
- 01R - This part identifies one of ten areas in WZ1. Correct entries for 01R are 010 to 019 (in WZ1 and international).
- CCC- This part identifies the country code. The code can have leading zeroes when these digits are a requirement. The correct entries for CCC are 001 to 009, 020 to 099, and 200 to 999 (out of WZ1).
- 01R or CCC - This part has two different descriptions. The value of the first two digits determines the descriptions. If the first two digits are 01, 01R applies. If the first two conditions are not 01, CCC applies. The VAPN only checks that the first two digits of this component are 01. The system converts incoming international calls in WZ1 to national calls.

Automatic number identification

If subfield ANISCREN is Y in table TRKGRP, the ANI must always be ten digits long.

XXX XXX XXXX - normally the numbering plan area (NPA)+seven digits

If subfield ANISCREN is N in table TRKGRP, the ANI can be three digits long.

XXX - just the NPA, which is normally an ANI failure condition

If subfield ANIDIGS is N in table TRKGRP, the ANI in the received inpulsing must be zero digits in length. The N in subfield ANIDIGS indicates that the system does not expect ANI digits. Normally, the ANI the EO transmits is the billing number or charge number (CN).

Information digits

Two information digits (II) identify the type, or class, of call. The two information digits appear in the following format:

XX two decimal digits

The most common values for II appear in the following list:

- 00 identified line, special treatment does not apply
- 01 operator number identification (ONI) (multiparty)
- 02 ANI failure
- 06 hotel or motel
- 07 coinless, hospital, inmate

The VAPN does not use the information digits received. The VAPN examines the ANI. If the ANI contains ten digits, the call is correct. The system can screen the call.

Called number (destination digits)

The called number can be of the following forms:

- 7D - seven digits, for national calls and international calls in WZ1
- 10D - ten digits, for national calls and international calls in WZ1
- CC + NN - country code and national number digits, for international calls out of WZ1. Total of 7 to 12 digits. Unlike CCC, the CC does not have zeros.
- 0 - operator or attendant, single-digit 0

Signaling phases

The MF outpulsing on an ATC trunk and what an FGD trunk receives, is built from the call parts. The call type determines the form of the outpulsing. The outpulsing has one of the following two forms.

- international
  - — phase 1 - international address
  - — phase 2 - ANI
  - — phase 3 - destination address
- national
  - — phase 1 - ANI
  - — phase 2 - destination address

Virtual Access to Private Networks (continued)

Each phase begins with a KP digit and ends with an ST digit. The VAPN node can distinguish an international call from a national call. To perform this action, the VAPN counts the digits received in the first phase.

> ***Note:*** The VAPN node can receive an international call in WZ1 as a national or an international call.

International address phase

The international address phase is only for an international call. The first phase that the VAPN node receives does not always have exactly 11 digits (KP + 9 digits + ST). When this condition occurs, the VAPN node determines an international phase is not present. The call is national. The VAPN treats the first phase like an ANI phase.

The type of call determines the form of the international phase. The call can be in or out of WZ1. The number of digits is the same for both forms. See “Multifrequency trunk signaling" in this feature description for details on the fields that appear in these forms:

- in WZ1 - KP + 1NX + XXX + 01R + ST (total 11 digits)
- out of WZ1 - KP + 1NX + XXX + CCC + ST (total 11 digits)

ANI phase

The ANI phase has two forms. The form of the ANI phase depends on if the AT or the EO sends the ANI. The datafill at the AT or EO determines if the AT or EO sends the ANI. The VAPN only imposes one limit on the values of the ANI digits or of the II digits. This restriction limits the digits from 0 to 9.

- ANI sent - KP + II + 10 digits + ST (total 14 digits)
- ANI not sent - KP + ST (total 2 digits)

The value of subfield ANIDIGS in table TRKGRP specifies if the system expects ANI and II digits on that trunk group. If field ANIDIGS is Y, the system expects ANI digits. If field ANIDIGS is N, the system does not expect ANI digits. The results of ANI digits sent and received appear in the following table. A result of OK indicates that processing continues to the next phase. A

result of partial dial (PDIL) treatment indicates that the call receives PDIL treatment after outpulsing is complete.

Result of ANI digits sent and received

Field ANIDIGS	Number of digits in ANI phase	Result
N	2 (no ANI or II)	OK
N	7 (ANI and NPA)	Treatment-PDIL
N	14 (ANI and II)	Treatment-PDIL
N	Other than 2 or 14 (see note)	Treatment-PDIL
Y (expected)	2 (no ANI or II)	Treatment-PDIL
Y (expected)	7 (ANI and NPA)	OK, if screening is off
Y (expected)	14 (ANI and II)	OK
Y (expected)	Other than 2 or 14 (see note)	Treatment-PDIL
Note: This result includes cases where the international phase has an incorrect number of digits.		

Destination address phase

Six correct forms of the destination address phase are available. The VAPN places only one limit on the values of the 7D, 10D, CC, and NN digits. The restriction limits the digits from 0 to 9.

- KP + 0 + ST: total 3 digits
- KP + 411 + ST: total 5 digits
- KP + 911 + ST: total 5 digits
- KP + 7D + ST: total 9 digits
- KP + 10D + ST: total 12 digits
- KP + CC + NN + ST (international only): total 9 to 14 digits

If the digits received do not match one of these forms, the system gives PDIL treatment.

Virtual Access to Private Networks (continued)

Signaling protocol

The three important signaling forms for a VAPN trunk appear as follows:

- national, or international in WZ1 treated as domestic (two phase)
- international in WZ1 (three phase)
- international out of WZ1 (three phase)

The three important signaling forms for a VAPN trunk appear in the following figure.

National dialing protocol

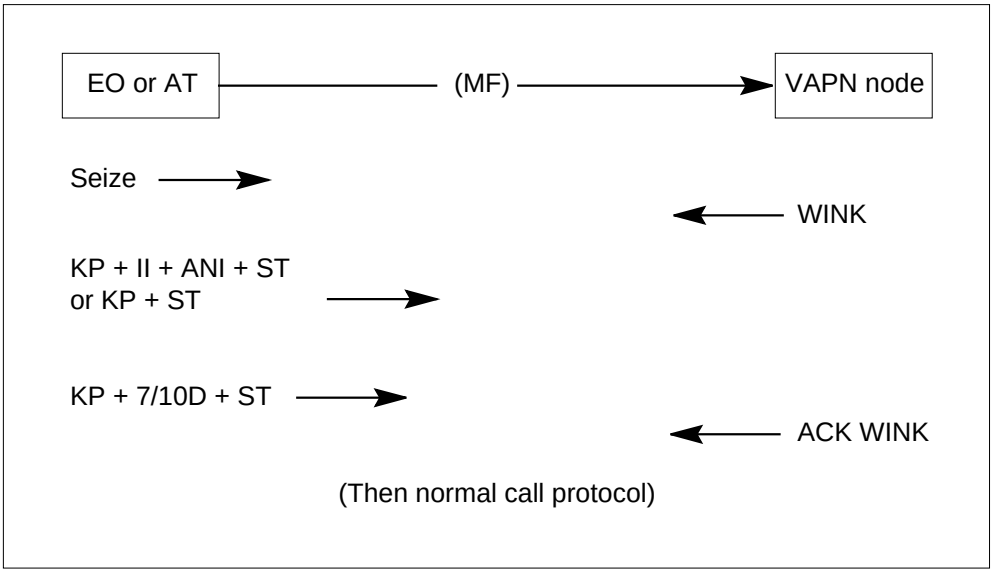

Virtual Access to Private Networks (continued)

International dialing protocol (in WZ1)

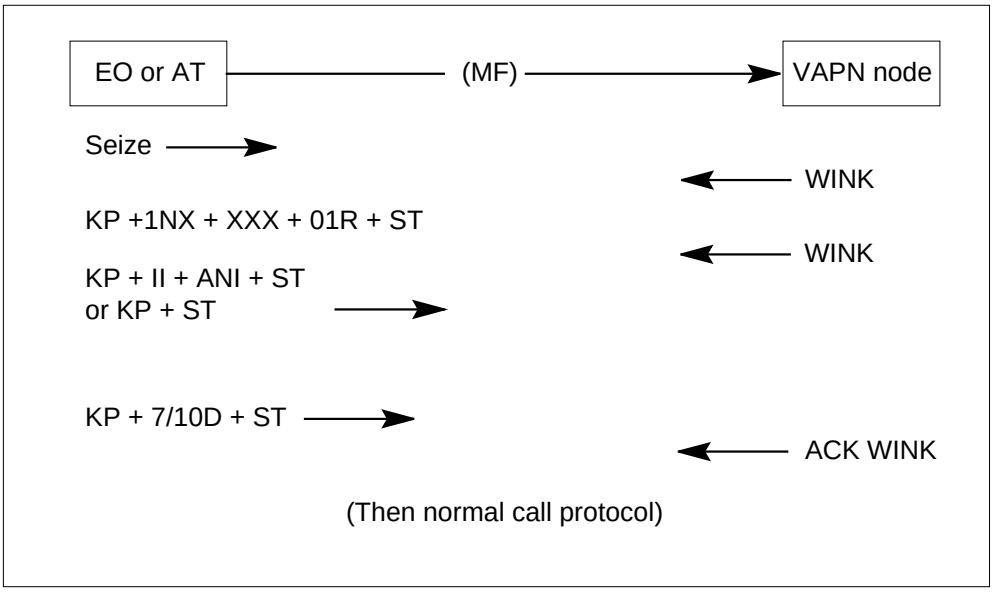

International dialing protocol (out of WZ1)

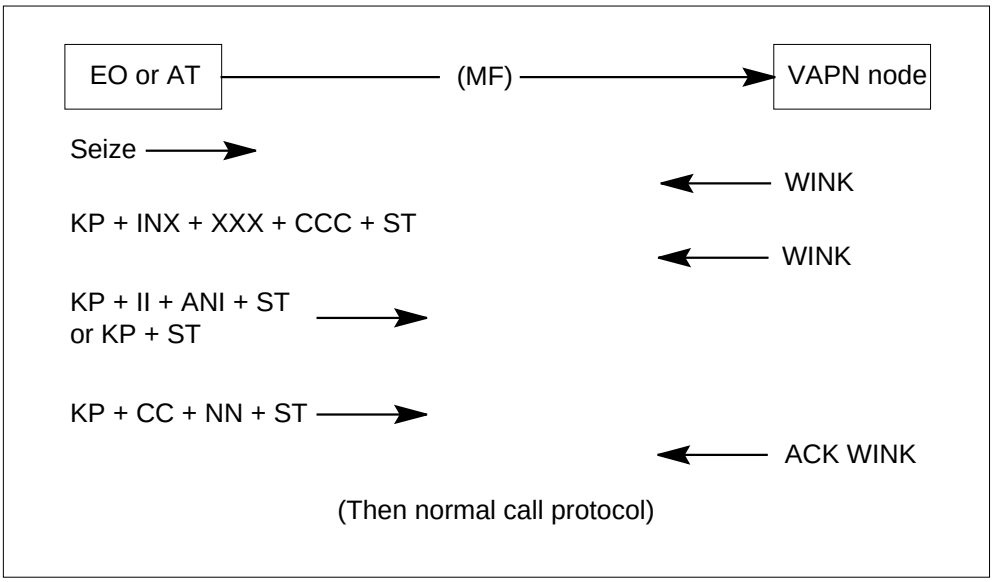

Protocol violation handling

The procedure to handle errors for specified conditions appeared in the preceding sections. The signaling received was correct in structure. The signaling received was not correct in number of digits between KPs and STs.

Virtual Access to Private Networks (continued)

The structure is the order and number of KPs and STs. Other errors are as follows:

- The system can expect a KP digit and does not receive the digit before the end of the time-out interval. When this condition occurs, the system gives permanent signal (PSIG) treatment.
- The system can expect digits and the system does not receive the closing ST before the end of the timeout interval. The system expects digits after the system receives a KP digit. When this condition occurs, the system gives PDIL treatment.
- The number of digits the system receives between a KP and ST digits can be different from what the system expects. When this condition occurs, the system gives PDIL treatment.

See “Call treatments" in this feature description for details on treatments.

Note: The system handles event errors that are not the reception of the FGD outpulsing, in the same method as with IBN trunks.

Signaling response upon protocol violations

The VAPN node can determine that the FGD signaling the node receives is correct in number, position, and timing of KP and ST pulses. When this event occurs, the VAPN responds with the correct WINK and ACK WINK pulses. The VAPN provides treatment. This condition makes sure that the calling party connects to the treatment the VAPN node sends back. The calling part connects at the EO or at the AT if the EO or AT is available. The treatment can be an announcement. Without an ACK WINK pulse, the establishment of a speech path from caller to announcement cannot occur. The EO or AT gives the call treatment.

The VAPN does not always receive KP and ST pulses correctly. One pulse can be missing. When this condition occurs, the VAPN node does not send back signaling before accessing the treatment.

Integrated services digital network user part trunk signaling

For ISUP VAPN trunks, signaling phases do not apply. The ISUP signaling contains messages. Each message has one or more parameters. Each parameter contains fields.

The ISUP signaling is more complicated than MF signaling. The complete description of the protocol does not appear in this document. Refer to TR-TSY-000394 for details on interexchange signaling.

Virtual Access to Private Networks (continued)

Messages

The system handles ISUP VAPN trunks like ISUP IBN trunks, with the exception of the following messages:

- initial address message - The IAM can contain parameters that are correct for VAPN trunks and not correct for normal IBN trunks.
- circuit reservation message - The AT or EO can send the CRM to a carrier. A VAPN node can receive the CRM.
- circuit reservation acknowledgment message - The system sends the CRA message back on the arrival of a CRM. The AT or EO expects the CRA message.

The TR-TSY-000394 defines the differences in signaling between VAPN ISUP and IBN ISUP. The three affected messages appear in the following sections.

Initial address message

The IAM contains the required call information for a VAPN call. The format of the TR-TSY-000394 IAM appears in the following table.

Note: The parameters marked TR-TSY-000317 are part of the TR-TSY-000394 protocol. Parameters marked optional are not present for every call.

Initial address message (TR-TSY-000394) (Sheet 1 of 2)

Parameter	Type	Reference
Message Type	Mandatory	TR-TSY-000317
Nature of Connection Indicators	Mandatory	TR-TSY-000317
Forward Call Indicators	Mandatory	TR-TSY-000317
Calling Party's Category	Mandatory	TR-TSY-000317
User Services Information (USI)	Mandatory	TR-TSY-000317
CPN	Mandatory	TR-TSY-000317
CPN	Optional	TR-TSY-000317

Note 1: In BCS31, the OLI and TNS parameters are in use for VAPN calls. In BCS32 and later versions, the system ignores the parameters.

Note 2: The system ignores the carrier selection and service code parameters for VAPN calls.

Virtual Access to Private Networks (continued)

Initial address message (TR-TSY-000394) (Sheet 2 of 2)

Parameter	Type	Reference
CN	Optional	TR-TSY-000394
OLI (Note1)	Optional	TR-TSY-000394
Transit Network Selection (TNS) (Note 1)	Optional	TR-TSY-000394
Carrier Selection (Note 2)	Optional	TR-TSY-000394
Service Code (Note 2)	Optional	TR-TSY-000394

Note 1: In BCS31, the OLI and TNS parameters are in use for VAPN calls. In BCS32 and later versions, the system ignores the parameters.

Note 2: The system ignores the carrier selection and service code parameters for VAPN calls.

To allow the ISUP IBNTI and IBNT2 trunks to handle the FGD signaling protocol, the system must treat IAM in a different method. For example, the system can send several IAM parameters for FGD calls. These parameters are not a requirement for intra-LATA calls. These parameters include the following parameters:

- CPN
- CN
- OLI
- TNS

Removal of ANI

Subfield ANIDIGS in table TRKGRP can be Y. When this condition occurs, the system can take the ANI from the CPD or the CN. The parameter that is present determines if the system takes the ANI from the CPD or CN. The ANI must be ten digits long.

- If both parameters are present, the CN is in use for the ANI.
- If only one parameter is present, this parameter is in use for the ANI.
- If the CPD and the CN are not present, the system generates reorder treatment.

If subfield ANIDIGS is N, the VAPN ignores these parameters.

The OLI parameter is the equivalent of the two-digit MF ANI II. The VAPN node ignores this parameter.

Removal of called number

The limits for address information (AI) and nature of address indicator (NOAI) fields in the CPN are the following values and groups:

- 7-digit calls
  - AI - 7 digits
  - NOAI - end-user number
- 10-digit calls
  - AI - 10 digits
  - NOAI - national significant number (10D calls)
- international calls
  - AI - 7 to 12 digits
  - NOAI - international number
- operator/attendant (0-) calls
  - AI - 0 digits (or 1 digit of 0)
  - NOAI - no address present, operator requested

Removal of international information

For BCS31, the IAM only includes the TNS parameter if an international offnet call occurs. The TNS includes the 1N/N'XXXX information. The VAPN feature prefixes this information to the called number. See “International calls" in this feature description for details.

For BCS32 and later versions, the IAM only includes the TNS parameter for an international call. This parameter includes the 1N/N'XXXX information. For VAPN calls, this parameter is an option. The VAPN ignores this parameter because the VAPN does not use the 1N/N'XXXX information.

Integrated services digital network user part CRMs and CRA messages

In the VAPN configuration, the AT or EO does not record the specified carrier as a VAPN node. The AT or EO can send a CRM. When this event occurs, a CRM timer (TCRM) starts at the AT or EO. The timer stops when the system receives a CRA message. If the TCRM times out, another circuit is specified.

Virtual Access to Private Networks (continued)

When the VAPN node receives a CRM on a VAPN trunk, the VAPN node returns a CRA message. The CRA message does not contain useful information. The messages indicates to the AT or EO to stop the TCRM.

The system only receives messages if the following conditions occur:

- an AT is present between the EO and the VAPN node
- the EO-to-AT protocol is MF

International calls

For BCS31, the system sends digits to MDC translations after VAPN processing is complete. The digits are not just the called party address received. The digits are the called party address prefixed with 1NXXXX. Derive these six digits are as follows:

- 1NX - locate this digit in table CKTDIGIT (Circuit Digit) with the circuit code in the TNS parameter
- XXX - locate this digit in the carrier identification code field of the TNS parameter

The system only uses the called party address to translate national calls.

The system does not convert ISUP international calls in WZ1 to national calls. National calls are domestic numbering plan calls.

For BCS32 and later versions, special handling of ISUP international calls does not occur. Table CKTDIGIT does not affect VAPN calls. Calls are not prefixed with 1NXXXX.

Protocol violation handling

The handling of errors for ISUP signaling is more complicated than for MF signaling. For treatment of protocol violations, and parameter value errors, see “Call treatments" in this feature description.

Call processing

The processing of a VAPN call appears in this section.

VAPN trigger

The system triggers special VAPN call processing when a call arrives on a trunk. The VAPN call processing is the preprocessing that occurs for a VAPN

call before the call transfers to MDC translations. The following conditions apply for the tuple in table TRKGRP that corresponds to the call:

- subfield GRPTYP is IBNTI or IBNT2
- subfield OFFNET is Y
- subfield OFFNTACC is FGD

The group of these three subfield values identifies the trunk group and the trunk to have the incoming direction dedicated to VAPN calls. The outgoing direction for VAPN IBNT2 trunks can be in use like the outgoing direction for IBNT2 trunks.

After the call arrives at the VAPN node on an FGD trunk, the assignment of the call occurs. Data entry for NCOS occurs in table TRKGRP. The ANI screening and authorization code can change these values.

If office parameter FGD_ANI_SMDR_REQD is Y and SMDR is active, the system initializes a special SMDR record. When the call disconnects, the system outputs this record. The system also outputs the normal SMDR record for an incoming IBN trunk call.

Trunk signaling

After the system triggers the VAPN feature, this feature receives the signaling information. The system sent this information on the trunk from the AT or EO.

After signaling reception

When reception of all signaling (MF or ISUP) occurs, ANI screening can occur. The screening can occur if subfield ANISCREN in table TRKGRP is

Virtual Access to Private Networks (continued)

Y for the trunk group that received the call. The following conditions apply to the screening:

- The system screens the ANI in table CGNSCRN. If screening fails, the system gives ADBF treatment. When screening fails, the system does not find the ANI.
- For offices with BCS31 software: If the system finds the ANI, screening passes. If screening passes, the following conditions apply.
  - — For calls that are national or international and calls in WZ1, the customer group and NCOS values of the call change. The values change to the values in the tuple of the ANI in table CGNSCRN.
  - — For calls that are international and calls out of WZ1, the customer group and NCOS values of the call do not change. The values remain at the values in table TRKGRP.
  - — If field ACCTREQ in table CGNSCRN is Y, the system sets the internal account code required flag. The system prompts the end user for an account or authorization code.
- For offices with BCS32 and later versions, if screening passes, the following conditions apply.
  - — The customer group and NCOS values of the call change. The values change to the values in the tuple of the ANI in table CGNSCRN. This condition applies to calls that are MF, ISUP, domestic or international.
  - — If field ACCTREQ in table CGNSCRN is Y, the system sets the internal account code required flag. The system prompts the end user for an account or authorization code.

If subfield ANISCREN is N and subfield ANIDIGS is Y in table TRKGRP, screening does not occur. The call retains the value of the customer group and NCOS values in table TRKGRP. The system outputs an additional SMDR record if the datafill specifies this condition. If subfield ANIDIGS is N, screening does not occur. The call retains the customer group and NCOS values from table TRKGRP. The system does not generate an additional SMDR record.

Post-VAPN translations

The VAPN preprocessing of the call is complete. The call passes to normal IBN trunk translations. These translations can alter the NCOS. The system treats the call as if the call arrived on an IBNTI or IBNT2 trunk group entered with the set customer group and NCOS. This condition occurs because of VAPN processing.

Virtual Access to Private Networks (continued)

The IBN trunk translations can perform the following actions:

- terminate the call to a line
- route the call over a private network
- route the call over the public intra-LATA network
- send the call to a carrier for inter-LATA completion

The last action only works if the VAPN node is an EO. The line or private network trunk can be on a private network node (PBX) next to the VAPN node.

Called digits sent to IBN translations - BCS31

For MF, the digits that the system sends to IBN trunk translations are the called party digits without a prefix. These digits can be the first dialed digits. The prefix can be 1 or 011. The digits the system sends appear in the following list:

- in WZ1 - 0, 7D, or 10D
- out of WZ1 - CC + NN (7 to 12 digits)

Note: The EO does not send the prefix.

For ISUP, the digits the system passes to translation appear in the following list. See “International calls" in this feature description for details.

- in WZ1 - 0, 7D, or 10D
- out of WZ1 - 1NX + XXX + CC + NN (13 to 25 digits)

Called digits sent to IBN translations - BCS32 and up

The called digits that the system send to IBN trunk translations are not always the digits that the VAPN trunk received. The VAPN feature maps the digits the VAPN received to digits the system translates in the following methods:

- 0- calls - the system sends 00 to translations
- 7 digit calls - the system sends seven digits to translations (not changed)
- 10 digit calls - the system sends 10 digits to translations (not changed)
- international calls - the system sends 011 and the digits the VAPN received to translations. The digits the VAPN received are of the form CC+NN...NN. The CC is the country code and NN...NN is the national number in that country.

This mapping removes the problem between domestic and international called numbers. For example, the called digits 4195551212 can be a North American call (419-555-1212), or an international call (41-955-51212). When this event

Virtual Access to Private Networks (continued)

occurs, the IBN translations do not have a method to differentiate the two conditions. The VAPN prefixes international numbers with 011.

This condition creates an problem with 0- calls, because 011 starts with 0. To solve this problem, the VAPN feature converts 0- calls to 00.

The mapping of digits the VAPN received to digits translated affects datafill for specified translations. These translations include table IBNXLA (IBN Translation) and table STDPRTCT (Standard Pretranslator).

Mixing inside-WZ1 and outside-WZ1 traffic - MF

The following information and restrictions apply to BCS31 only. In BCS32 and later versions, domestic and international traffic can mix on the same VAPN trunks without restrictions.

The loss of the prefix digits to translations for MF calls is not always a problem. This condition is not a problem if translations handle calls in WZ1 or calls out of WZ1. If the VAPN must handle calls from in and out of WZ1, a problem can occur. Problems can occur in the decoding of the destination address because the prefix digits are not available to translations.

As an example of this problem, consider the number in WZ1, 813-645-1234 and the number out of WZ1, 81-36-451234. For the first number, 813 is the NPA. For the second number, 81 is the country code. The numbers are different addresses. If the called digits 8136451234 arrive, the system cannot determine the destination.

To solve this problem, VAPN allows calls in WZ1 and calls out of WZ1 to have different customer groups and NCOSs. The VAPN forces calls out of WZ1 to keep the customer group and NCOS values in table TRKGRP. This condition continues to apply after screening. Calls in WZ1 take customer group and NCOS values from table CGNSCRN. This event occurs if screening occurs.

A different customer group and NCOS group must be in tables TRKGRP and CGNSCRN for each end user group of mixed traffic.

Virtual Access to Private Networks (continued)

The following rules for VAPN incoming trunk groups and CACs apply. These rules apply if assume screening is active for all incoming VAPN trunk groups.

- If end user groups do not have incoming international VAPN calls, the assignment of the following must occur:

  — a single trunk group for all AT (or EO) to VAPN node traffic

  — a single CAC for the VAPN node

  Screening assigns the correct customer group and NCOS values to each incoming call according to the ANI. Screening does not use the customer group and NCOS values in table TRKGRP.

- Mixed calls are in WZ1 and out of WZ1. If an end user group contains mixed calls, that group requires an AT or EO to VAPN node trunk group and a CAC. This condition occurs because the customer group and NCOS values determine the translation of incoming calls out of WZ1. These values appear in table TRKGRP. The assignment of a different group of customer group and NCOS values to this end user group can occur. This event can occur when calls arrive at the VAPN node over a trunk group dedicated to that group.

  The customer group and NCOS values determine the translation of calls in WZ1 of a group with mixed traffic. These values are in table CGNSCRN. This translation removes the problem.

  Note: For mixed traffic, ANI screening must be on. For mixed traffic, fields TRKGRP and CUSTGRP must contain different customer group and NCOS groups.

Mixing inside- and outside-WZ1 traffic - ISUP

The following information and restrictions apply to BCS31 only. In BCS32 and later versions, domestic and international traffic can mix on the same VAPN trunks without restrictions.

The ISUP called digits are prefixed with 1NXXXX for international calls. This condition does not apply to MF. The ISUP called digits follow rules like rules for MF for the source of customer group and NCOS for translations:

- national calls - customer group and NCOS values from table CGNSCRN (if screening is on)
- international calls - customer group and NCOS values from table TRKGRP

Virtual Access to Private Networks (continued)

The information in “Mixing in WZ1 and out of WZ1 traffic - MF" in this feature description also applies to ISUP, if the following conditions apply:

- the phrase “in WZ1" changes to “national"
- the phrase “out of WZ1" changes to “international"

This condition applies because ISUP international calls in WZ1 do not change to national calls. This condition does not apply to MF.

Outpulsing on a trunk (tandeming) - BCS32 and up

Outpulsing on a trunk for BCS32 and later versions appears in the following section. Outpulsing on a trunk is tandeming.

MF tandeming

The system can tandem an incoming MF VAPN call out of the VAPN node to another trunk. When this event occurs, the outgoing signaling is a function of the translation and routing for the call at the VAPN node. The outgoing signaling is not a function of the nature of the incoming call. The outgoing call appears as if the call originates on a dedicated IBN trunk at the VAPN node.

The outpulsing is the same for a call that comes in as a domestic or international VAPN call. The translation and routing of the call determine the outpulsing.

ISUP tandeming

A call on an incoming ISUP VAPN trunk can connect through the VAPN node to an outgoing ISUP trunk. When this event occurs, the system tandems the ISUP messages through the switch in both directions. This condition like the operation of normal IBN ISUP trunks. The outgoing call type can be FGD (with ANI). This condition does not affect the tandeming of the messages.

The system does not tandem all parameters in the IAM through the VAPN node. The system makes sure the three parameters associated with ISUP FGD calls do not tandem through the VAPN node. These three parameters are OLI, TNS, and carrier selection. This event occurs so that the tandemed call appears as if the call originated on a dedicated IBN trunk.

The outgoing trunk can be a type IT or ATC trunk. The system regenerates these three parameters according to the call type. The call type can be domestic or international.

As for MF calls, the call can come in as a domestic or international VAPN call. This condition does not affect the outpulsing. The routing and translation determine the outpulsing of the call.

The system tandems all other parameters of the IAM that processing in the VAPN node does not affect. These parameters include USI, CPN and CN.

Setting of call parameters

The VAPN affects three call parameters. These parameters are the account code required flag, the customer group, and the NCOS. How VAPN affects parameters appears in the following paragraphs.

Account code required flag

The DMS -100 switch can receive FGD signaling that is ANI and destination digits. After this event, datafill can allow the DMS-100 switch to return special dial tone to the originating office. The switch waits for an account code or authorization code, or both codes. After the end user hears the special dial tone, the end user enters the code(s).

In BCS31, the VAPN feature does not collect an account or authorization code. Virtual Access to Private Network uses these following codes:

- For calls in WZ1, or for national calls (ISUP), VAPN sets an internal account code required flag. The calls in WZ1 can be national or international (MF). The VAPN sets the flag to the value that appears in field ACCTREQ of table CGNSCRN. The value can be Y or N.
- For calls out of WZ1 (MF), or for international calls (ISUP), VAPN does not change the value of the internal account code required flag. The VAPN leaves the flag at the value of N.

In BCS32 and later versions, the VAPN does not perform the collection of an account code or authorization code. The role of VAPN is to set an internal account code required flag. The VAPN sets the flag to the value in field ACCTREQ of table CGNSCRN. The VAPN sets this flag to Y or N in table CGNSCRN for all call types. This event can occur only if subfield ANISCREN in table TRKGRP is Y. The call types include MF and ISUP, domestic and international. If subfield ANISCREN is N, the VAPN sets the flag to N.

For all BCSs, datafill encountered after VAPN can change the value of this internal flag during call processing. This datafill includes field ACR in tables NCOS (Network Class of Service) and IBNXLA. This datafill can set the flag to Y after the ANI screening table (Table CGNSCRN). The value of Y indicates that prompting is on. The datafill cannot reset the flag to N.

Table CUSTHEAD (Customer Group Head) can contain data that allows the prompting for an account code or authorization code. When this event occurs, the system always prompts a call when field ACCTREQ in table CGNSCRN is Y. Field ACCTREQ in table CGNSCRN can be N. When this event occurs,

Virtual Access to Private Networks (continued)

the system prompts a call when translations turns the prompting on. The system encounters translations after VAPN.

Field ACCTREQ can contain N. When this event occurs, the account and authorization features operate like the features operate for an normal incoming IBN trunk call.

Loop-around trunks must be in use if one of the following is in use over ISUP trunks:

- authorization codes
- account codes
- Direct Inward System Access (DISA)

Customer group and NCOS

In BCS31, a call can arrive on a FGD trunk. When this event occurs, the assignment of a customer group and NCOS to the call occurs. The customer group and NCOS appear table TRKGRP of that trunk.

Assignment of the customer group and NCOS can occur to the call. This assignment occurs when the following conditions occur:

- the system screens the call (subfield ANISCREN is Y)
- the call is in WZ1
- the ANI of the call passes screening

Virtual Access to Private Networks (continued)

The customer group and NCOS values can change. The call and datafill determine how the customer group and NCOS change. The changes appear in the following table.

Note: The account code required flag is from field ACCTREQ in table CGNSCRN. This condition applies if the customer group and NCOS values are from table CGNSCRN.

Source of customer group and NCOS

Call type	Source of customer group of the call and NCOS if screening passes or if screening does not occur
National, ANISCREN = N	Table TRKGRP
National, ANISCREN = Y	Table CGNSCRN
MF	
International, in WZ1, ANISCREN = N	Table TRKGRP
International, in WZ1, ANISCREN = Y	Table CGNSCRN
International, out of WZ1, ANISCREN = N	Table TRKGRP
International, out of WZ1, ANISCREN = Y	Table TRKGRP (Note)
ISUP	
International, ANISCREN = N	Table TRKGRP
International, ANISCREN = Y	Table CGNSCRN
Note: The ANIs on these calls must appear in table CGNSCRN if screening is active. The system ignores the three fields after the ANI. These three fields are CUSTGRP, NCOS, and ACCTREQ.	

In BCS32 and later versions, screening can be on for all VAPN calls. When screening is on, subfield ANISCREN is Y. When this event occurs the assignment of customer group and NCOS values to the call occurs. These values are in table CGNSCRN for the incoming ANI.

Virtual Access to Private Networks (continued)

Screening can be turned off. When screening is off, subfield ANISCREN is N. When this event occurs, the assignment of customer group and NCOS values to the call occurs. These values are in table TRKGRP.

Special handling of 0- calls

In BCS31, the system handles 0- calls in a different method from other calls. An incorrect ANI on the call does not block these calls.

In the following conditions, the system can route 0- calls:

- the system expects ANI and does not receive ANI (subfield ANIDIGS is Y)
- the system expects ANI and receives an incorrect number of digits (subfield ANIDIGS is Y)
- the system expects ANI and receives ANI (subfield ANIDIGS is Y) and ANI does not appear in table CGNSCRN (subfield ANISCREN is Y)
- the system does not expect ANI (subfield ANIDIGS is N) and receives ANI (MF calls only; for ISUP calls). This condition is not an error condition.

When one of these error conditions occurs, the call retains the customer group and NCOS values from Table TRKGRP. For other conditions, when screening passes, the assignment of the customer group and NCOS values to the call occurs. These values appear in table CGNSCRN.

The system translates and routes failing 0- calls on a VAPN trunk group according to the customer group and NCOS group. The system can route these calls to treatment. For other conditions, traffic from several customers mixes at the station where the system routes failing 0- calls.

In BCS32 and later versions, the system treats VAPN 0- calls like other VAPN call types. The calls fail if the ANI fails screening.

Call treatments

VAPN treatments

The VAPN feature creates the ADBF treatment as a special treatment for the VAPN node. The feature applies treatment to FGD calls when the ANI is ten digits long and is not in table CGNSCRN. In a DMS-100 switch, this treatment only associates with the failure to find an ANI in table CGNSCRN. This treatments is not for any other purpose.

Use of current treatments

The most important treatments that VAPN can access appear in this section. The conditions under which these treatments occur appear in this section. This

section indicates if the trunk signaling is MF, ISUP, or MF and ISUP for each treatment.

- permanent signal (PSIG)
  - — The system does not receive an ST the system expects before time-out. (MF)
- partial dial (PDIL)
  - — The system does not receive a KP the system expects before time-out. (MF)
  - — The system expects ANI and
    - – the system receive ANI and the II and the ANI is not exactly 12 digits (MF)
    - – the system receive ANI and the ANI is not exactly 10 digits (ISUP)
  - — The system does not expect ANI and the system receives ANI. (MF)
  - — The called digit count is 1 and the digit is not a 0. (MF, ISUP)
- call rejected (CREJ)
  - — The nature of address in the CPN has an incorrect value.
  - — An incorrect digit is in the CPN. An incorrect digit is a digit that is not 0 to 9. (ISUP)
  - — The system does not find the OLI parameter. The VAPN node is not an EAEO. (ISUP) (BCS31 only)
  - — The CN is present and has 0 digits (ISUP). Subfield ANIDIGS in table TRKGRP is Y.
  - — The CPN is present and has 0 digits (ISUP). Subfield ANIDIGS is Y.
- re-order (RODR)
  - — The system does not find the CN or the CPN in the IAM (ISUP). Subfield ANIDIGS in table TRKGRP is Y.
  - — The IAM TNS parameter is an incorrect value (ISUP) (BCS31 only).

Translations changes

To create translations for a VAPN application, datafill at the EAEO, AT, and VAPN node must change. Most changes at the EAEO and AT are changes that support a new carrier. The following sections provide a summary of the required changes.

Virtual Access to Private Networks (continued)

EAEO, AT and VAPN nodes

Note: The EAEO and AT are not always Nortel products. The following paragraphs assume that EAEO and AT are Nortel products.

For BCS 31, the assignment of one CAC for the VAPN node for end user groups with calls in WZ1 VAPN must occur. The assignment of one CAC for each end user group with mixed VAPN calls must occur. Mixed VAPN calls are calls in WZ1 and calls out of WZ1.

For BCS32 and later versions, the assignment of one CAC for the VAPN service to cover all end user groups must occur. This CAC can be in use over the complete network. This event can occur if only one VAPN node serves each EAEO.

Note: Two or more VAPN nodes can serve an EAEO if each node has a different CAC.

EAEO

Enter the CAC of the VAPN node as a PIC on lines that use VAPN. When this event does not occur, the VAPN end user can dial the VAPN CAC directly, with 10XXX+.

A special dial plan for VAPN lines can be a requirement. When this event occurs, enter the dial plan or disable digit screening. This action makes sure the system does not block private numbering plan calls.

Access tandem

The AT must contain datafill to recognize all CACs and route those calls to the VAPN node. One trunk group for each CAC must contain datafill as trunk type ATC. Fields SIGTYPE and ANI must match subfield ANIDIGS in table TRKGRP at the VAPN node.

VAPN node

Table CLLI (Common Language Location Identifier) must contain data. The assignment of incoming trunks to trunk tables must occur. The incoming trunks are from the AT or EAEO as FGD trunks.

The MDC translations tables must contain data for the customer groups and NCOSs assigned in table CGNSCRN.

For BCS31, the MDC translations tables must contain data for the default customer groups and NCOSs. These customer groups and NCOSs appear in

table TRKGRP for the FGD trunk groups. These customer groups are in use when the following events occur:

- the system does not screen a call
- the call is to a location out of WZ1

For BCS32 and later versions, the MDC translations tables must contain data for default customer group(s) and NCOSs values. These values appear in table TRKGRP for the FGD trunk groups. These customer groups and NCOS are in use if the system does not screen calls.

> ***Note:*** Datafill for the VAPN trunk groups on the VAPN node does not have to be identical for each trunk group. For example, one trunk group can use screening and a different trunk group does not use screening.

Table CGNSCRN must contain data in the set of ANIs that the system recognizes. This table contains the customer group and NCOS values to assign to the call. This table contains a flag that indicates if the system prompts for an account code or authorization code. If ANI screening is not in use, this table can remain blank.

The value of office parameter FGD_ANI_SMDR_REQD in table OFCVAR (Variable Office) must turn on or off the second VAPN SMDR record. See “Operational measurements" in this feature description for details.

The definition of ADBF announcement in tables ANNS (Announcements), ANNMEMS (Announcement Members), DRAMTRK (Digital Recorded Announcement Machine Track), and TMTCNTL (Treatment Control) must occur.

Hardware

The provisioning status of a specified DMS-100 switch determines the required hardware. To add VAPN capability, the VAPN can require the following hardware:

- additional DS-1 trunks for VAPN traffic, incoming as FGD calls and outgoing as FGD or other calls
- additional tone receivers or universal tone receivers (UTR)
- program store and data store memory cards
- loop-around DS-1 trunks for dual-tone multifrequency (DTMF) digit collection on ISUP trunks. These trunks are a requirement if the account code or authorization code features are in use. These trunks are a requirement if the DISA feature is in use.

Virtual Access to Private Networks (continued)

Note: In BCS31 and later versions, loop-around trunks are not always a requirement. The trunks are not a requirement if the peripheral module, on which the VAPN trunk terminate, has UTRs.

User interface

The DMSMON command allows the end user to monitor performance factors in the DMS-100 switch. The size of specified tables appears in the DBLOCKS menu command in DMSMON. The keys of these tables are a range of digits. For VAPN, DBLOCKS extends to include table CGNSCRN. This table allows DMSMON to monitor of the number of digit blocks in use in table CGNSCRN.

Command input

From the command interpreter (CI) level of the MAP (maintenance and administration position), type DMSMON. When you are in the DMSMON level, type DBLOCKS. The output displays the size of all digilator tables in the switch. These tables include table CGNSCRN. When the output is complete, type QUIT to exit the DMSMON level.

Example output

An example of the DMSMON output for table CGNSCRN appears in the following figure.

Example of DMSMON output

```
Number of digit blocks used by CGNSCRN:          328
Number of digit blocks allocated for CGNSCRN:   32766
Percent used:   1.0       Percent available:     99.0
```

Translations table flow

The Virtual Access to Private Networks translations tables appear in the following list:

- Table CUSTHEAD (Customer Group Head) contains customer groups data.
- Table NCOS (Network Class of Service) must contain data to define the NCOS for two-way IBN trunk groups that table CGNSCRN references.

  Note: The VAPN requires that table NCOS contains data. This table must contain data when authorization or account code features define the NCOS that table CGNSCRN references.

Virtual Access to Private Networks (continued)

- Table CLLI (Common Language Location Identifier) defines each incoming FGD trunk group to the VAPN node.

  Note: The VAPN requires that table CLLI must contain data to define the trunk group name.

- Table TRKGRP (Trunk Group) defines the attributes associated with each trunk group in the switching unit. Call processing for VAPN occurs when a call arrives on a specified trunk. This trunk has a corresponding tuple in table TRKGRP. This table has subfield GRPTYP set at IBNTI or IBNT2. Subfield OFFNET is at Y. Subfield OFFNTACC is at FGD.
- Table TRKSGRP (Trunk Subgroup) contains additional information for each subgroup assigned to a trunk group in table TRKGRP.
- Table TRKMEM (Trunk Member) contains the data for each trunk the trunk group and subgroup tables specify.

  Note: The VAPN requires that table TRKMEM must contain data to define trunk group and trunk subgroup table data.

- Table CGNSCRN (Calling Number Screening) screens VAPN calls according to the ANI digits the system receives. If the call passes screening, assignment of a new customer group and NCOS occur to the call. An account and authorization code option can be active. If ANI digits screening is not a requirement, table CGNSCRN does not require datafill.
- Table DNOWN (Directory Number Owner) controls access to the partitioned table editor to table CGNSCRN. Table DNOWN defines owners of ANIs that appear in table CGNSCRN. Table DNOWN cannot define owners of DNs for the Service Order System (SERVORD).

  Note: The VAPN requires that table CUSTHEAD must contain data if authorization or account code features define the customer group referenced in table CGNSCRN.

The Virtual Access to Private Networks translation process appears in the following flowchart.

Virtual Access to Private Networks (continued)

Table flow for Virtual Access to Private Networks

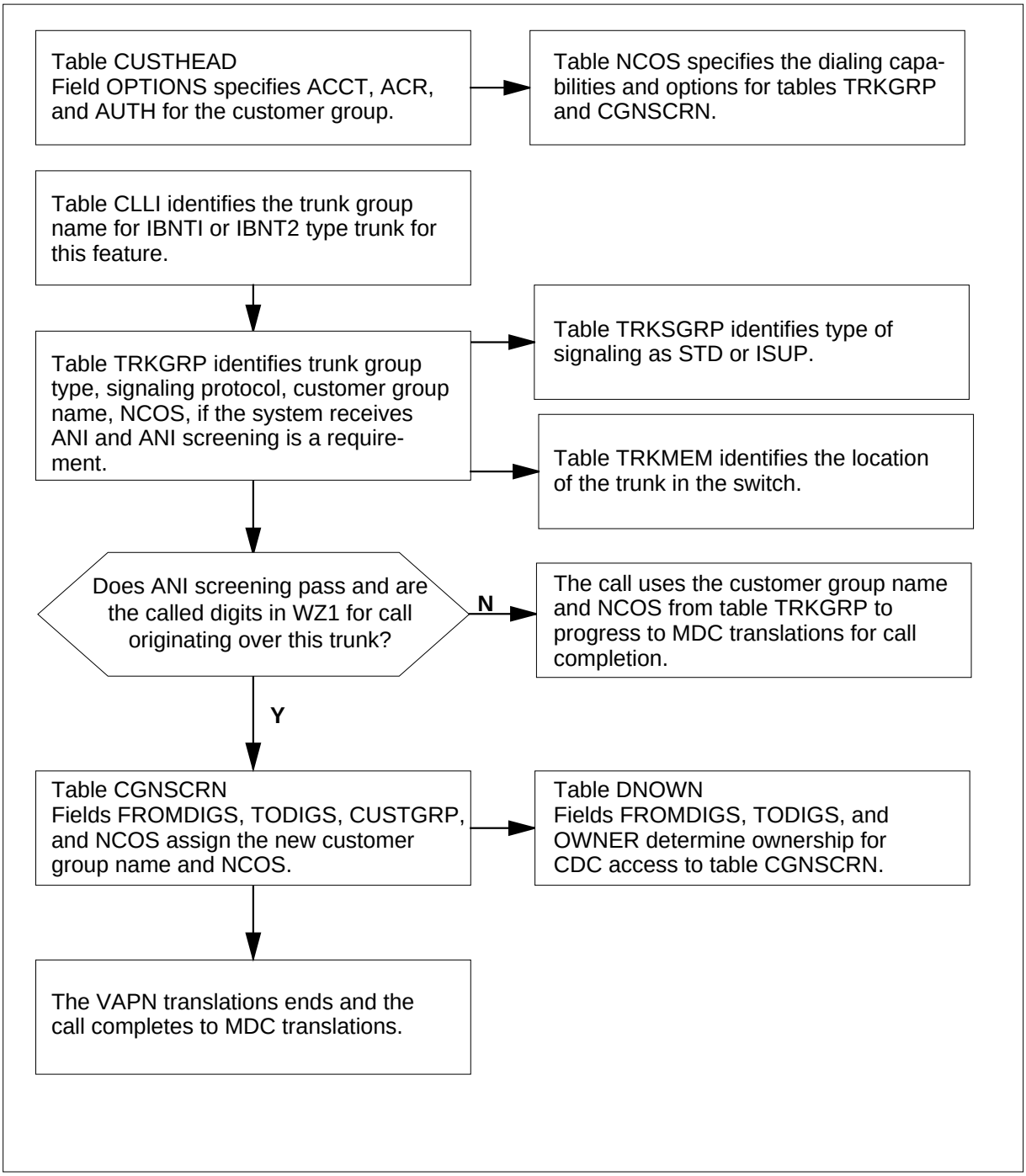

Virtual Access to Private Networks (continued)

The datafill content in the flowchart appears in the following table.

Datafill example for Virtual Access to Private Networks

Datafill table	Example data
CUSTHEAD	MDCGRP1 BNCR BNR1 NIL (ACR AUTH 0)
NCOS	MDCGRP1 0 CKDATA 0 0 ACR Y $
CLLI	MFFGDVAPN 888 5 FROM_EAEO_TO_ATC
TRKGRP	FGDTI IBNTI 0 ELO NCRT MDCGRP1 1 13 7224111 ANSDISC 0 N N N N N N Y 0 0 N N N N Y FGD Y Y $ $
TRKSGRP	MFFGDVAPN 0 DS1SIG STD IC MF WK N 10 10 N0 WK N N N C UNEQ $ ISUPVAPN 0 DS1SIG C7UP IC N N UNEQ N N ACTIVEAE Q764 THRH 100 DMSNODE NIL $
TRKMEM	MFFGDVAPN 0 1 SRCC 0 12 1 $
CGNSCRN	9195551212 9195561214 MDCGRP1 0 Y
DNOWN	9195551212 9195551218 NETMDC 9195551220 9195551220 NILOWNER

Limits

The following limits apply to Virtual Access to Private Networks:

- The incoming direction of trunks that data entry specifies as FGD can be in use for VAPN only.
- The FGD trunks that terminate on a VAPN node must originate from an EAEO or AT.
- The VAPN does not support outgoing capability with FGD protocol signaling. Two-way IBN FGD trunks can use the outgoing side of the two-way trunk for standard central office signaling. This signaling is not FGD access-to-carrier signaling. You can enter data in these trunks so the outgoing direction can be in use for calls that terminate in the LATA.

  The VAPN node can be an EAEO. When this condition occurs, the node can tandem incoming ISUP FGD calls. The node can tandem the calls to outgoing MF or ISUP FGD calls to ATs or carriers. In BCS31, the VAPN cannot tandem incoming MF FGD calls.

  In BCS32 and later versions, the VAPN can tandem incoming MF and ISUP FGD calls.

Virtual Access to Private Networks (continued)

- In BCS31, the ANI the system received on an incoming MF VAPN trunks is not available. The ANI is not available for tandeming to trunks or display on lines with display sets.
- Subfield DIR of table TRKSGRP must contain incoming (IC) or two-way (2W) for VAPN trunks.
- Incoming FGD trunks support DS1 signaling only. Field CARDCODE in table TRKSGRP must contain DS1SIG for VAPN trunks.
- The system does not support operator-assisted calls (0+). Only direct-dialed calls can occur.
- The VAPN does not perform information digit (II) screening. The test for a correct ANI is if the ANI contains ten digits.
- The 800 INWATS or 800 universal access capability is not with VAPN. The VAPN converts incoming MF VAPN calls that are international and in WZ1 to national calls. The VAPN hands the calls off to normal IBN translations.
- In BCS31, the destination digits can be not clear. The digits can be not clear when the system receives national and international and out of WZ1 (MF) or national and international (ISUP) calls. The VAPN nodes that accept both these call types require table CGNSCRN to screen all incoming FGD calls. The customer group and NCOS groups that correspond in tables TRKGRP and CGNSCRN must be different. In BCS32 and later versions, this restriction does not apply.
- The VAPN does not support features that require special activation, or are not transparent to the trunk. These features include Network Ring Again.
- The office parameter MARKET_OF_OFFICE must contain NORTHAM (North America). This condition applies because the system only supports VAPN for the North-American Equal-Access market.
- The system does not support the presubscription indicator for MF calls. The presubscription indicator is the carrier selection parameter. The presubscription indicator can be on for a carrier at the AT or EO. When this condition occurs, the outpulsing starts with a KP pulse for a call from an end user presubscribed to that carrier. If the call is from an end user not presubscribed to that carrier, the outpulsing starts with a KP prime (KP') pulse. The VAPN node always expects a KP as the first pulse. If the presubscription indicator on for the VAPN carrier, the VAPN node rejects non-presubscribed calls. The VAPN node rejects these calls with PSIG.
- For ISUP calls, the system ignores the presubscription indicator.
- The 1NX screening for international MF calls is not present.

- Station Message Detail Recording and account and authorization codes are not part of the VAPN package. These features are available with feature packages NTX102AA and NTX103AA.
- The FGD allows the EO to perform overlap outpulsing. The EO can start outpulsing ANI before the end user finishes dialing. This condition minimizes call set-up time.
- The VAPN only supports pure dialing. Pure dialing is not cut-through dialing. You cannot dial 10XXX#, wait for a special dial tone, and continue entering the destination digits.
- For MF signaling, VAPN always expects two (national) of three (international) phases.
- In BCS31, fields CUSTGRP, NCOS, and ACCTREQ in table CGNSCRN only can be in use if the following conditions apply:
  - — screening is active (field ANISCREN is Y)
  - — screening passes (the ANI is in table CGNSCRN)
  - — the call is in WZ1 (MF) or is national (ISUP)
- In BCS32 and later versions, fields CUSTGRP, NCOS, and ACCTREQ in table CGNSCRN only are in use if the following conditions apply:
  - — screening is active (subfield ANISCREN is Y in table TRKGRP)
  - — screening passes (the ANI is in table CGNSCRN)
- In BCS31, a 0- call can always translate. The call can translate even though the ANI of the call is not correct or fails screening. In BCS32 and later versions, special handling of 0- calls does not occur. The calls fail if the ANI of the call is not correct or fails screening.
- The DTMF digit collection on ISUP trunks require the use of loop-around trunks. This condition also applies to IBN trunks. The DTMF digit collection on ISUP trunks is for account or authorization codes and DISA.

Note: In BCS31 and later versions, loop-around trunks are not always a requirement. The trunks are not a requirement if the peripheral module on which the VAPN trunks terminate contains UTRs.

Interactions

Virtual Access to Private Networks does not have functionality interactions.

Activation/deactivation by the end user

Virtual Access to Private Networks does not require activation or deactivation by the end user.

Virtual Access to Private Networks (continued)

Billing

Virtual Access to Private Networks does not affect billing.

Station Message Detail Recording

For an incoming IBNTI or IBNT2 trunk, the system can generate a SMDR record. The system can generate an SMDR record when the value of field SMDR in table TRKGRP is Y. For VAPN trunks, the system can generate an SMDR record. The system generates an SMDR when the values in subfield OFFNET are Y and subfield OFFNTACC is FGD. See “Datafill procedure for table TRKGRP" in this feature description for details.

The VAPN feature also introduces office parameter FGD_ANI_SMDR_REQD in table OFCVAR (Variable Office). This parameter allows the system to generate a second, optional SMDR data record. This record includes the ANI of the originator for the incoming FGD trunk calls.

This additional record appears when the following three conditions occur.

- The original SMDR record appears. This action indicates that SMDR is active on the incoming trunk group.
- Parameter FGD_ANI_SMDR_REQD is Y.
- Field ANIDIGS in table TRKGRP is Y in the incoming trunk group.

This second record is the only effect on SMDR by VAPN. The VAPN feature does not affect the SMDR records that the system can generate for account or authorization codes. See “Office parameters" in this feature description for details.

The introduction of VAPN does not affect the SMDR records that the system generated for incoming IBN trunk calls. If office parameter FGD_ANI_SMDR_REQD is not active, the system produces one SMDR record for each VAPN call.

SMDR record codes

The record codes of the second SMDR record with ANI appear in the following list:

- D1 short form SMDR call record
- D2 short form NERVE (Network Surveillance) call record
- D3 long form SMDR call record
- D4 long form NERVE call record

An example of a VAPN SMDR record appears in the following figure.

Example of VAPN SMDR Records

```
*REC CODE: D1  CUSTGRP CLLI: 004  ORIGTYPE: 3  ORIGID: 378A0000AAA
 DATA CALL ID: A  INFO DIGS: 40  CONS NO: FF  SUBGRP: 0  TRM TYPE: 0
 TRM ID: 6136216060A0  RTE INFO: 0  DAY=001  TIME: HR=18  MIN=45  SEC=52
 ELAPSED TIME=000015  ORIG FC: 0  TERM FC: 0  CLD NO: 6136216060AA

*REC CODE: D1  CUSTGRP CLLI: 004  ORIGTYPE: 7  ORIGID: 6136211242A
 DATA CALL ID: A  INFO DIGS: 40  CONS NO: FF  SUBGRP: 0  TRM TYPE: 0
 TRM ID: 6136216060A0  RTE INFO: 0  DAY=001  TIME: HR=18  MIN=45  SEC=52
 ELAPSED TIME=000015  ORIG FC: 0  TERM FC: 0  CLD NO: 6136216060AA
```

Refer to the *Meridian Digital Centrex Station Message Detail Recording Reference Guide*, 297-2071-119 for additional information on the SMDR system.

Message Detail Recording Revenue Accounting Office (MDRRAO)

A name for the alternate call detail recording by a customer group is Message Detail Recording Revenue Accounting Office (MDRRAO). The MDRRAO is available for VAPN calls as MDRRAO is available for incoming IBN trunk calls. The system does not record the incoming VAPN ANI in the MDRRAO billing stream. See “MDR Data in the AMA Stream" in this document for additional details.

Datafilling office parameters

The VAPN feature introduces office parameter, FGD_ANI_SMDR_REQD in table OFCVAR. This parameter allows the system to generate a second optional SMDR data record. This record includes the ANI of the originator for the incoming FGD trunk calls.

When this office parameter is active, the system produces an additional SMDR record for the call. The record has a ORIGTYPE (code 7) that indicates that this record is for a FGD trunk call. This ORIGTYPE indicates that the following field, ORIGID, is the ANI of the originator. The trunk group ID and trunk member ID normally follow field ORIGID.

SMDR fields

The VAPN features creates new values for SMDR fields ORIGTYPE and ORIGID.

Virtual Access to Private Networks (continued)

Field ORIGTYPE specifies a single-digit code defining the call origination type. The origination types for VAPN appear in the following table.

Origination types for VAPN

Code	Origination Type	Purpose
3	Trunk	Normal type for incoming trunk
7	FGD ANI	Different for VAPN in DMS-100 switch

The origination type code of 7 is only for the optional SMDR record for FGD trunk calls. This code indicates that the ANI follows in the ORIGID field of this record.

Field ORIGID specifies the 12 BCD digits that specify the ID of the originator. The meaning and content of field ORIGID for both VAPN SMDR records appear in the following table.

Origination types for VAPN

Origination Type	Origination ID Digits	Meaning
3	1 - 3	Trunk group ID, a binary number the system converts to CLLI
	4	Spare
	5 - 8	Trunk member ID, binary number
	9 - 12	Spare
7	1 - 10	Automatic number identification
	11 - 12	Spare

The SMDR call record format is like the format for VAPN. The only difference is that the SMDR record uses field ORIGID, not the format length. Most fields have the same value in both output records. Fields ORIGTYPE and ORIGID are the only fields that do not have the same value in both output records.

Control of VAPN SMDR

The VAPN SMDR parameter, FGD_ANI_SMDR_REQD, must be active to produce the optional FGD SMDR records. To turn the additional record on,

set the value of FGD_ANI_SMDR_REQD to Y. To turn the additional record off, set the value of FGD_ANI_SMDR_REQD to N.

Note: The system generates the second record if the system generated the first SMDR record for the trunk group.

The office parameters Virtual Access to Private Networks uses appear in the following table. Refer to *Office Parameters Reference Manual* for how Virtual Access to Private Networks affects office parameters.

Office parameters by Virtual Access to Private Networks

Table name	Parameter name	Explanation and action
OFCVAR	FGD_ANI_SMDR_REQD	Specifies that the system generates a second, optional SMDR data record. This record includes the ANI of the originator for the incoming FGD trunk calls. Enter Y to turn on the optional SMDR record for VAPN calls. Enter N if this record is not a requirement.

Datafill sequence

The tables that require datafill to implement Virtual Access to Private Networks appear in the following table. The tables appear in the correct entry order.

Datafill requirements for Virtual Access to Private Networks

Table	Purpose of table
OFCVAR	Variable Office Parameter Table. This table contains data on variable parameters for the office. See “Datafilling office parameters" for how Virtual Access to Private Networks affects office parameters.
TRKGRP	Trunk Group Table
TRKSGRP	Trunk Subgroup Table
CGNSCRN	Calling Number Screening Table
CUSTHEAD	Customer Group Head Table
DNOWN	Directory Number Owner Table

Note: After VAPN processes a call, the call routes to MDC translations. Data entry must occur for all MDC customer group translations. The preceding datafill procedures do not include the datafill required to set up a

Virtual Access to Private Networks (continued)

new MDC customer group. The procedures do not include the DISA features which can be in use with VAPN.

Datafilling table TRKGRP

Table TRKGRP defines the attributes associated with each trunk group in the switching unit. Each trunk group entry in table TRKGRP contains a different CLLI for the trunk group. Each trunk group entry contains other fields the trunk group type determines.

Call processing for VAPN occurs when a call arrives on a specified trunk. This trunk must have a corresponding tuple in table TRKGRP which contains the following datafill:

- field GRPTYP contains IBNTI or IBNT2
- subfield OFFNET contains Y
- subfield OFFNTACC contains FGD

The value of subfield ANIDIGS in table TRKGRP specifies if the system expects ANI and information digits on that trunk group.

If subfield ANISCREN contains N, and subfield ANIDIGS is Y, screening does not occur. The call retains the value of the customer group and NCOS in table TRKGRP. The system generates an additional SMDR record if datafill specifies this event. If field ANIDIGS is N, screening does not occur. The call retains the customer group and NCOS values from table TRKGRP. The system does not generates an additional SMDR record.

Datafill for Virtual Access to Private Networks for table TRKGRP appears in the following table. The fields that apply to Virtual Access to Private Networks appear in this table. See the data schema section of this document for a description of the other fields.

Datafilling table TRKGRP (Sheet 1 of 2)

Field	Subfield or refinement	Entry	Explanation and action
GRPINFO		see subfields	Group Information. This field contains many subfields. Subfields GRPTYP and OFFNET for this feature.
	GRPTYP	IBNTI, IBNT2	Trunk Group Type. This subfield specifies the trunk group type. Enter IBNTI or IBNT2.
	OFFNET	Y	Offnet. This subfield specifies if the trunk group is for off-network access. Enter Y.

Datafilling table TRKGRP (Sheet 2 of 2)

Field	Subfield or refinement	Entry	Explanation and action
If OFFNET is set to Y, subfield OFFNTACC requires datafill.			
	OFFNTACC	FGD	Offnet Access. This subfield specifies the type of trunk signaling protocol for the specified trunk. Enter FGD.
If OFFNTACC contains FGD, subfields ANIDIGS and ANISCREN require datafill.			
	ANIDIGS	Y	Automatic Number Identification Digits. This subfield specifies if the system receives ANI digits over the trunk group. Enter Y if the system performs ANI screening on VAPN calls.
	ANISCREN	Y	Automatic Number Identification Screening. This subfield specifies if ANI screening is a requirement for VAPN calls across IBN FGD trunks. This field specifies if call processing validates the incoming ANI digits in table CGNSCRN. Enter Y.

Datafill example for table TRKGRP

Sample datafill for table TRKGRP appears in the following example.

In the example, an IBNTI trunk group with FGD signaling with ANI digits and ANI screening is active.

MAP example for table TRKGRP

```
   GRPKEY                                        GRPINFO
_____________________________________________________________
   FGDTI  IBNTI 0 ELO NCRT MDCGRP1 1 13 7224111 ANSDISC 0
N N N N N N Y 0 0 N N N N Y FGD Y Y  $ $
```

Datafilling table TRKSGRP

Table TRKSGRP contains additional information for each subgroup assigned to a trunk group that appears in table TRKGRP. The VAPN uses only MF or ISUP signaling. Table TRKSGRP must contain values for these signaling types.

Datafill for Virtual Access to Private Networks for table TRKSGRP appears in the following table. The fields that apply to Virtual Access to Private Networks

Virtual Access to Private Networks (continued)

appear in this table. See the data schema section of this document for a description of the other fields.

Datafilling table TRKSGRP

Field	Subfield or refinement	Entry	Explanation and action
CARDCODE		DS1SIG	Card Code. This field specifies the product engineering code (PEC) of the the trunk card. Enter DS1SIG.
SGRPVAR		see subfields	Variable Subgroup Data. This field contains many subfields. Subfields SIGDATA and DIR for this feature.
	SIGDATA	STD, C7UP	Signaling Data. This subfield specifies the type of signaling in use. If the trunk group uses MF signaling, enter STD. If the trunk group uses ISUP signaling, enter C7UP.
	DIR	IC, 2W	Direction. This subfield specifies the direction of the trunk group. Enter IC for incoming or 2W for two-way.
If SIGDATA is STD, subfields IPULSTYP and ISTARTSG require datafill.			
	IPULSTYP	MF	Incoming Type of Pulsing. This subfield specifies the type of pulsing. Enter MF for multifrequency.
	ISTARTSG	WK	Incoming Start Dial Signal. This subfield specifies the type of start dial signal. Enter WK for wink.
If SIGDATA is C7UP, subfield PROTOCOL requires datafill.			
	PROTOCOL	Q764	Signaling Protocol Type. This subfield specifies the type of signaling protocol. Enter Q764.

Datafill example for table TRKSGRP

Sample datafill for table TRKSGRP appears in the following example.

MAP example for table TRKSGRP

```
SGRPKEY     CARDCODE    SGRPVAR
_____________________________________________________________
MFFGDVAPN   0           DS1SIG STD IC MF WK N 10 10 N0 WK
N N N C UNEQ $

ISUPVAPN    0           DS1SIG C7UP IC N N UNEQ N N
ACTIVEA Q764 THRH 100 DMSNODE NIL $
```

Datafilling table CGNSCRN

Table CGNSCRN allows end users to add or delete standard access stations from the VAPN systems. Table CGNSCRN screens VAPN calls according to the ANI digits, the system receives. If the call passes screening, the assignment of a new customer group and NCOS to the call occurs.

Activation of an account code and authorization code option can occur. In BCS31, the system prompts the caller to enter an authorization code or an account code. This event occurs when the call passes ANI screening, is in WZ1 (for MF calls) or national (for ISUP calls) and field ACCTREQ is Y. In BCS32 and later versions, the system can prompt the caller to enter an authorization code or an account code. This event occurs when the call passes ANI screening and field ACCTREQ is Y. If ANI screening is not in use, you can leave table CGNSCRN blank.

The customer group and NCOS must be in table NCOS.

Allocation for memory for table CGNSCRN occurs as required. The maximum size of this table is 32 639 digit blocks. The contiguity of the datafill determines the relationship between digit blocks and the maximum number of tuples. If the set of ANIs is nearer, the table can hold more ANIs. Table CGNSCRN can normally contain a maximum of 8000. Use command DMSMON to monitor the size of table CGNSCRN.

Datafill tables like table CGNSCRN store enough digits to identify the range. These tables have a range of digits as the key field. For example, the end user enters the following digits for fields FROMDIGS and TODIGS:

9195551212 9195561214

The system stores the tuple as 919555 919556 because 919555 919556 is enough to identify all tuples in the range.

Virtual Access to Private Networks (continued)

The number 919555 919556 contains all tuples in the specified range. The position on a TO and FROM digits in the ranges accesses the tuple. For example, to find the tuple for 9195551224, the end user can type

```
> POS 9195551224    9195551224
```

The switch responds with the following:

```
9195551224 9195551224 COMKODAK  0   N
```

When this tuple appears, the switch displays the correct tuple as the system stores the tuple:

```
> LIST
```

```
 919555   919556   COMKODAK   0   N
```

Note: The end user must specify FROM and the TO digits to position on a tuple with the POS command.

Datafill for Virtual Access to Private Networks for table CGNSCRN appears in the following table. The fields that apply to Virtual Access to Private Networks appear in this table. See the data schema section of this document for a description of the other fields.

Datafilling table CGNSCRN (Sheet 1 of 2)

Field	Subfield or refinement	Entry	Explanation and action
KEY		see subfields	Key. This field contains subfields FROMDIGS and TODIGS. These subfields define a range of ANI digits. The ANI digits of calls can fall in this range. The system uses the information in this tuple to screen and manipulate these calls.
	FROMDIGS	0 to 9	From Digits. This subfield defines the lower limit of the range of ANI digits. Enter a maximum of ten digits from 0 to 9.
	TODIGS	0 to 9	To Digits. This subfield defines the upper limit of the range of ANI digits. Enter a maximum of ten digits from 0 to 9.

Datafilling table CGNSCRN (Sheet 2 of 2)

Field	Subfield or refinement	Entry	Explanation and action
CUSTGRP		1- to 16-character	Customer Group Name. This field specifies the name of the customer group in table NCOS. Enter the 1- to 16-character name of the customer group. ***Note:*** For BCS31, the assignment of this customer group to the call can occur. This event occurs if the call passes ANI screening and is in WZ1 (for MF signaling) or national (ISUP signaling). For BCS32 and later versions, the assignment of this customer group to the call can occur. This event occurs if the call passes ANI screening.
NCOS		0 to 511	Network Class of Service. This field specifies the network class of service that defines a specified dial plan. The customer can access to this dial plan. The NCOS must be in table NCOS. Enter a number from 0 to 511. ***Note:*** For BCS31, the assignment of this NCOS to the call can occur. This event occurs if the call passes ANI screening and the call is in WZ1 (for MF signaling) or national (ISUP signaling). For BCS32 and later versions, the assignment of this NCOS to the call can occur. This event occurs if the call passes ANI screening.
ACCTREQ		Y or N	Account Code Required. This field specifies if an account code or authorization code is a requirement. Enter Y or N. ***Note:*** The datafill in table CUSTHEAD determines if the call requires an authorization code or an account code.

Datafill example for table CGNSCRN

Sample datafill for table CGNSCRN appears in the following example.

Virtual Access to Private Networks (continued)

MAP example for table CGNSCRN

```
KEY                          CUSTGRP     NCOS    ACCTREQ
_____________________________________________________________
9195551212  9195561214  MDCGRP1     0       Y
```

Datafilling table CUSTHEAD

Table CUSTHEAD contains customer group information. Options ACCT (Account Code Capability), ACR (Authorization or Account Code) or ACR (Authorization Code Option) must contain data if field ACCTREQ in table CGNSCRN is Y.

Datafill for Virtual Access to Private Networks for table CUSTHEAD appears in the following table. The fields that apply to Virtual Access to Private Networks appear in this table. See the data schema section of this document for a description of the other fields.

Datafilling table CUSTHEAD (Sheet 1 of 2)

Field	Subfield or refinement	Entry	Explanation and action
OPTIONS		ACCT, ACR, AUTH	Options. This field specifies the options for the specified customer group. Enter one or more of the following options: • Enter ACCT if the customer group has the account code capability. • Enter ACR if the customer group has the authorization or account code option. • Enter AUTH if the customer group has the authorization code option.
If OPTIONS is ACCT, subfields DIGINACC, NOTIMOUT, and ACCTVAL require datafill.			
	DIGINACC	2 to 14	Digits in Account Code. This subfield specifies the number of digits in the account code. Enter a number from 2 to 14.
	NOTIMOUT	Y or N	Time-out. This subfield specifies if an octothorpe entry or an interdigit time-out is a requirement. Enter Y if a time-out is not a requirement. Enter N if the system does not route the call until the user enters an octothorpe or an interdigit timer expires.

Virtual Access to Private Networks (continued)

Datafilling table CUSTHEAD (Sheet 2 of 2)

Field	Subfield or refinement	Entry	Explanation and action
	ACCTVAL	Y or N	Account Code Validation. This subfield specifies if the validation of account codes of the specified customer group must occur. Enter Y or N.
If OPTIONS is ACR, subfields AUAC and FLEXINO require datafill.			
	AUAC	AUTH, ACCT, AUARS	Authorization or Account Code. This subfield specifies the type of authorization or account code, or both codes, to enter. Enter AUTH if the entry of an authorization code or a combined authorization and account code occurs last. Enter ACCT if the entry of an account code occurs last. Enter ARS if an authorization code is in use for automatic route selection. Enter AUARS if the entry of an authorization code occurs last and is in use for ARS.
	FLEXINO	0 to 63	Flexible Intercept Number. This subfield specifies the treatment number the system routes a specified call. This call has an incorrect authorization or account code. Enter a number from 0 to 63.
If OPTIONS is AUTH, subfields PARTNM, SECRECY, and COMB require datafill.			
	PARTNM	alphanumeric	Authorization Partition Name. This subfield specifies the name for the customer group in the authorization code and partition tables. Enter the authorization partition name.
	SECRECY	Y or N	Secrecy. This subfield specifies how an authorization code end user must indicate end of dialing. The end user can key in an octothorpe or wait for the interdigit timer to expire. Enter N to specify that an end of dialing indication is a requirement. Enter Y to specify that an end of dialing indication is not a requirement.
	COMB	Y or N	Combined Authorization and Account Code. This subfield specifies if the code is a combined authorization and account code. Enter Y or N.

Datafill example for table CUSTHEAD

Sample datafill for table CUSTHEAD appears in the following example.

Virtual Access to Private Networks (continued)

MAP example for table CUSTHEAD

```
CUSTNAME    CUSTXLA DGCOLNM     IDIGCOL     OPTIONS
_____________________________________________________
MDCGRP1     BNCR    BNR1        NIL ( ACR  AUTH 0 )
```

Datafilling table DNOWN

Table DNOWN controls access to the partitioned table editor to table CGNSCRN. Use table DNOWN to define owners of ANIs that table CGNSCRN stores. This table does not define owners of DNs for SERVORD.

If the CDC feature package is in the switch, the end user can modify the data in specified tuples in table DNOWN. Table DNOWN allows the end user to own a range of ANIs in table DNOWN.

Datafill for Virtual Access to Private Networks for table DNOWN appears in the following table. The fields that apply to Virtual Access to Private Networks appear in this table. See the data schema section of this document for a description of the other fields.

Datafilling table DNOWN

Field	Subfield or refinement	Entry	Explanation and action
KEY		see subfields	Key. This field contains subfields FROMDIGS and TODIGS. These subfields define a range of ANI digits and the tuples in which the end user can access in table CGNSCRN.
	FROMDIGS	0 to 9	From Digits. This subfield defines the lower limit of the range of ANI digits. Enter a maximum of ten digits from 0 to 9.
	TODIGS	0 to 9	To Digits. This subfield defines the upper limit of the range of ANI digits. Enter a maximum of ten digits from 0 to 9.
OWNER			Owner. This field specifies the name of the owner of the range of DNs. This name must be in table OWNER. Enter the owner name.

Datafill example for table DNOWN

Sample datafill for table DNOWN appears in the following example.

MAP example for table DNOWN

```
KEY                                OWNER
_____________________________________________________________
9195551212  9195551218             NETMDC
9195551220  9195551220             NILOWNER
```

Note: Table DNOWN is available only in BCS32 and later versions.

Tools for verifying translations

The TRAVER (translation verification) command is a modified command to handle VAPN calls. Examples of VAPN calls are the reference Table CGNSCRN and a prompt for the ANI digits.

Called number digits

The called number digits required for a VAPN TRAVER are not the same as the digits received on a VAPN call.

In BCS31, enter the called number digits for TRAVER with the following method:

- For 0- calls, type 0 as the called digit.
- For 7-digit calls, type the seven digits.
- For 10-digit calls, type the ten digits.
- For MF international calls, type C..CN..N. The C..C is the variable length country code. The N..N is the variable length national number.
- For ISUP international calls, type 1NXXXXC..CN..N. The 1NX is the code from Table CKTDIGIT. The circuit code in the TNS parameter accesses this code. The XXX is the carrier identification code from the TNS. The C..CN..N is the country code plus the national number.

In BCS32 and later versions, you must enter the called number digits for TRAVER with the following method:

- For 0- calls, type 00 as the called digits.
- For 7-digit calls, type the seven digits.
- For 10-digit calls, type the ten digits.
- For MF calls outside of WZ1 and ISUP international calls, type 011C..CN..N. The C..C is the variable length country code. The N..N is the variable length national number.

Virtual Access to Private Networks (continued)

Note: The called digits for TRAVER correspond to the called digits that the system sends to MDC translations.

ANI digits

The end user can use the TRAVER command for a VAPN trunk-to-trunk or a trunk-to-line call. The TRAVER prompts the end user to enter the ANI digits received by the trunk. This action occurs if field ANIDIGS in Table TRKGRP is Y. For example, if the end user enters the TRAVER command with the following trunk originator:

```
>TRAVER TR MFFGDVAPN  6216060 B
```

A request for ANI digits appears in the following prompt:

```
Please enter ANI digits:
```

To execute a TRAVER on a correct VAPN call, the ANI entered must contain ten digits and be in table CGNSCRN.

The following is a list of VAPN-specific error messages. The TRAVER generates these messages if the entered ANI is not acceptable.

- `ANI CONTAINS TOO MANY DIGITS`

  This error message appears when the end user enters more than ten digits after the ANI prompt.

- `ANI SHOULD CONTAIN 10 DIGITS`

  This error message appears when the end user enters less than ten digits after the ANI prompt.

Limits

The following limits indicate differences between how TRAVER displays specified VAPN calls and how call processing handles the call.

- The TRAVER does not prompt for account or authorization codes. This condition continues to apply when account or authorization codes are active in datafill.
- In BCS31 and earlier versions, the following limits apply for MF calls outside WZ1 or ISUP international calls:
  - Call processing assigns the customer group and NCOS in Table TRKGRP to the call. This condition applies if table CGNSCRN screens or does not screen the call. If the system screens the call, TRAVER assigns the customer group and NCOS to the call in table

CGNSCRN. If the system does not screen the call, TRAVER assigns the customer group and NCOS to the call in Table TRKGRP.

For these TRAVER calls, enter a facsimile tuple for ANI in Table CGNSCRN to use with the TRAVER only. The tuple for ANI in Table CGNSCRN contains the customer group and NCOS from Table TRKGRP. The customer group and NCOS are for the trunk group on which international calls arrive. Enter the facsimile tuple for ANI when TRAVER is for an international call.

Note: In BCS32 and later versions, TRAVER is the same as call processing for calls outside WZ1 and international.

Example TRAVER calls

The TRAVER examples for the following types of VAPN calls appear from line origination to line origination:

- 0- MF
- 10-digit MF
- 7-digit MF
- international MF, outside WZ1
- international MF, inside WZ1
- 7-digit ISUP
- international ISUP
- failed call

0- MF call

Translations mechanisms for 0- MF calls appear in the following TRAVER examples.

- TRAVER 1a: The POTS station at EAEO dials 00 with PIC of VAPNM or
- TRAVER 1b: The POTS station at EAEO dials 10564-0. Both TRAVERs outpulse called digits of 0 on trunk MFATCVAPN.
- TRAVER 2: The Trunk MFFGDVAPN receives these digits at the VAPN node. The VAPN screens the call and routes to an attendant console (AC).

Examples of TRAVER appear in the following figure.

Virtual Access to Private Networks (continued)

0 - MF call example

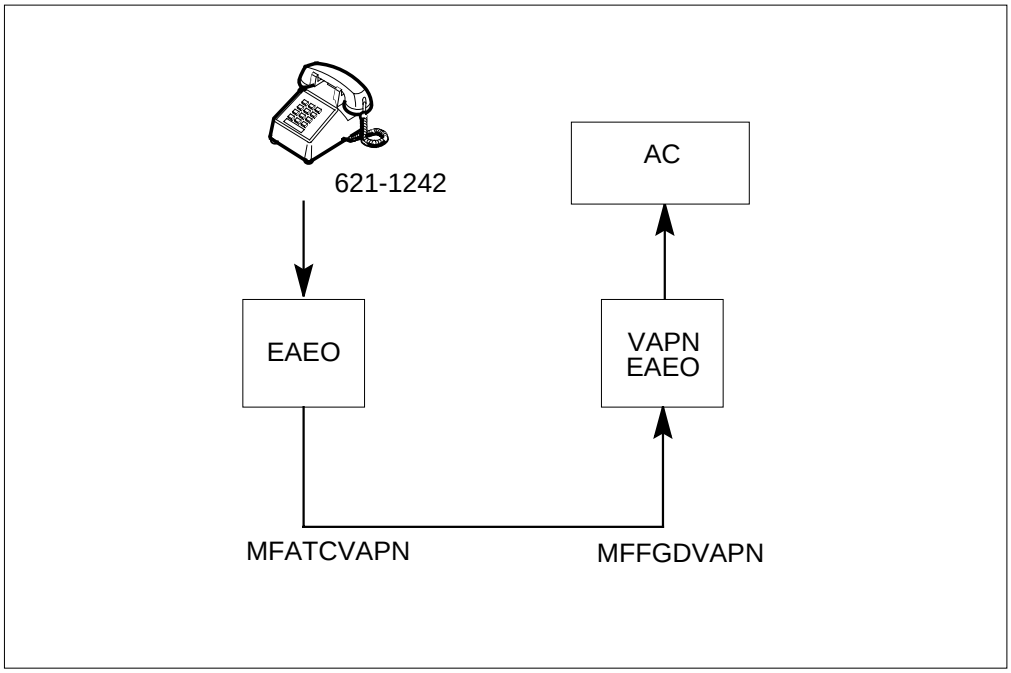

Sample output from TRAVER appears in the following example. In this example, TRAVER examines a 0- MF call from a POTS station at EAEO with dialed digits 00. The call has a PIC of VAPNM.

TRAVER 1a output example for EAEO - line to trunk

```
>TRAVER L 6211242 00 B
TABLE LINEATTR
855 1FR NONE NT FR01 0 613 VEO1 L613 N TOPS N 10 NIL...
... NILSFC VAPNLATA 0 NIL NIL 00 N
LCABILL OFF – BILLING DONE ON BASIS OF CALLTYPE
TABLE DNATTRS
TUPLE NOT FOUND
TABLE STDPRTCT
VEO1 ( 1) ( 0)
 . SUBTABLE STDPRT
 . 00 00 T OA 1 OFRT 668 2 2 NONE
 . . TABLE OFRT
 . . 668 CND EA INTNL SK 2
 . .   N D MFATCVAPN 0 D N
 . .   CND ALWAYS SK 1
 . .   N D MFATCVAPN 15 D116 N
 . . EXIT TABLE OFRT
 . SUBTABLE AMAPRT
 . KEY NOT FOUND
 . DEFAULT VALUE IS:   NONE OVRNONE  N
TABLE LENFEAT
HOST 00 1 10 01 S PIC PIC VAPNM Y
OVERLAP CARRIER SELECTION (OCS) APPLIES
TABLE OCCINFO
VAPNM 564 EAP Y Y Y Y N Y N Y Y Y LONG 0 FGRPD N N Y N N...
... N Y N N Y
TABLE EASAC
NOT ENOUGH DIGITS FOR SAC CALL
TABLE STDPRTCT
VEO1 ( 1) ( 0)
 . SUBTABLE STDPRT
 . 10564 10564 EA DD 5 P VEO6 VAPNM Y OFRT 668 6 25 Y
 . . TABLE OFRT
 . . 668 CND EA INTNL SK 2
 . .   N D MFATCVAPN 0 D N
 . .   CND ALWAYS SK 1
 . .   N D MFATCVAPN 15 D116 N
 . . EXIT TABLE OFRT
 . TABLE STDPRTCT
 . VEO6 ( 1) ( 0)
 . . SUBTABLE STDPRT
```

Virtual Access to Private Networks (continued)

TRAVER 1a output example for EAEO - line to trunk (continued)

```
 . . 00 00 EA DD 1 N VAPNM Y OFRT 668 6 25 Y
 . . . TABLE OFRT
 . . . 668 CND EA INTNL SK 2
. . .   N D MFATCVAPN 0 D N
  . . .   CND ALWAYS SK 1
  . . .   N D MFATCVAPN 15 D116 N
  . . . EXIT TABLE OFRT
  Using Equal Access (EA) route   OFRT  668 from... Pretranslation
 TABLE OFRT
 668 CND EA INTNL SK 2
   N D MFATCVAPN 0 D N
   CND ALWAYS SK 1
   N D MFATCVAPN 15 D116 N
 EXIT TABLE OFRT

+++ TRAVER: SUCCESSFUL CALL TRACE +++

 DIGIT TRANSLATION ROUTES
 1 MFATCVAPN         D0    ST
 TREATMENT ROUTES.  TREATMENT IS: GNCT
 1 *OFLO
 2 LKOUT
 +++ TRAVER: SUCCESSFUL CALL TRACE +++
```

Sample output from TRAVER appears in the following example. In this example, TRAVER examines a 0- MF call from a POTS station at EAEO with dialed digits 10564-0.

TRAVER 1b EAEO - line to trunk

```
>TRAVER L 6211242 105640 B
TABLE LINEATTR
855 1FR NONE NT FR01 0 613 VEO1 L613 N TOPS N 10 NIL...
... NILSFC VAPNLATA 0 NIL NIL 00 N
LCABILL OFF – BILLING DONE ON BASIS OF CALLTYPE
TABLE DNATTRS
TUPLE NOT FOUND
TABLE STDPRTCT
VEO1 ( 1) ( 0)
 . SUBTABLE STDPRT
 . 00 00 T OA 1 OFRT 668 2 2 NONE
 . . TABLE OFRT
 . . 668 CND EA INTNL SK 2
 . .   N D MFATCVAPN 0 D N
 . .   CND ALWAYS SK 1
 . .   N D MFATCVAPN 15 D116 N
 . . EXIT TABLE OFRT
 . SUBTABLE AMAPRT
 . KEY NOT FOUND
 . DEFAULT VALUE IS:   NONE OVRNONE  N
CARRIER OPERATOR CALL.  LOOKING UP 10XXX–00
TABLE STDPRTCT
VEO1 ( 1) ( 0)
 . SUBTABLE STDPRT
 . 10564 10564 EA DD 5 P VEO6 VAPNM Y OFRT 668 6 25 Y
 . . TABLE OFRT
 . . 668 CND EA INTNL SK 2
 . .   N D MFATCVAPN 0 D N
 . .   CND ALWAYS SK 1
 . .   N D MFATCVAPN 15 D116 N
 . . EXIT TABLE OFRT
 . TABLE STDPRTCT
 . VEO6 ( 1) ( 0)
 . . SUBTABLE STDPRT
 . . 00 00 EA DD 1 N VAPNM Y OFRT 668 6 25 Y
 . . . TABLE OFRT
 . . . 668 CND EA INTNL SK 2
 . . .   N D MFATCVAPN 0 D N
 . . .   CND ALWAYS SK 1
 . . .   N D MFATCVAPN 15 D116 N
 . . . EXIT TABLE OFRT
```

Virtual Access to Private Networks (continued)

TRAVER 1b EAEO - line to trunk (continued)

```
Using Equal Access (EA) route   OFRT  668 from...
...Pretranslation
 TABLE OFRT
 668 CND EA INTNL SK 2
   N D MFATCVAPN 0 D N
   CND ALWAYS SK 1
   N D MFATCVAPN 15 D116 N
 EXIT TABLE OFRT

 +++ TRAVER: SUCCESSFUL CALL TRACE +++

 DIGIT TRANSLATION ROUTES
 1 MFATCVAPN         D0    ST
 TREATMENT ROUTES.  TREATMENT IS: GNCT
 1 *OFLO
 2 LKOUT
 +++ TRAVER: SUCCESSFUL CALL TRACE +++
```

Sample output from TRAVER appears in the following example. In this example, TRAVER examines a 0- MF call from trunk MFFGDVAPN to an AC.

TRAVER 2 - VAPN node - trunk to AC

```
>TRAVER TR  MFFGDVAPN 0 B
Please enter ANI digits:
>6136211242
Table TRKGRP
MFFGDVAPN IBNTI 0 NPDGP NCRT COMKODAK 0 0 N ANSDISC 0 Y N...
... N N N Y Y 0 0 N N N N
    Y FGD Y Y $ $
Table CGNSCRN
6136211242 6136211242 COMKODAK 0 N
Table NCOS
COMKODAK 0 0 0 ZDK0 ( OHQ 0 TONE_OHQ) ( CBQ 0 3 N 2)...
...( ACR N)$
Table CUSTHEAD: CUSTGRP, PRELIMXLA, CUSTXLA, FEATXLA,...
... VACTRMT, AND DIGCOL
COMKODAK PXDK CXDK CUSTFEAT 0 ZDK
TABLE DIGCOL
ZDK 0 RPT
NCOS PRELIM XLA name is NIL. Go to next XLA name.
TABLE IBNXLA: XLANAME PXDK
TUPLE NOT FOUND
Default is to go to next XLA name.
TABLE IBNXLA: XLANAME CXDK
CXDK 0 ATT 1
Call routed to ATTENDANT CONSOLE:
COMKODAK   SUBGRP: 0   ICI:   1


+++ TRAVER: SUCCESSFUL CALL TRACE +++


DIGIT TRANSLATION ROUTES
1 CON COMKODAK      SUBGROUP 0  ICI 1
TREATMENT ROUTES.  TREATMENT IS: GNCT
1 T120
+++ TRAVER: SUCCESSFUL CALL TRACE +++
```

Virtual Access to Private Networks (continued)

Ten-digit MF call

The following TRAVER examples describe translations mechanisms for ten-digit MF calls. Translations mechanisms for ten-digit MF calls appear in the following figure:

- TRAVER 3: The POTS station at EAEO dials 1-613-621-6060 (VAPNM). Outpulses called digits of 6136216060.
- TRAVER 4: Trunk MFFGDVAPN receives these digits at the VAPN node. The VAPN feature screens the ANI and routes to a line.

Ten-digit MF call example

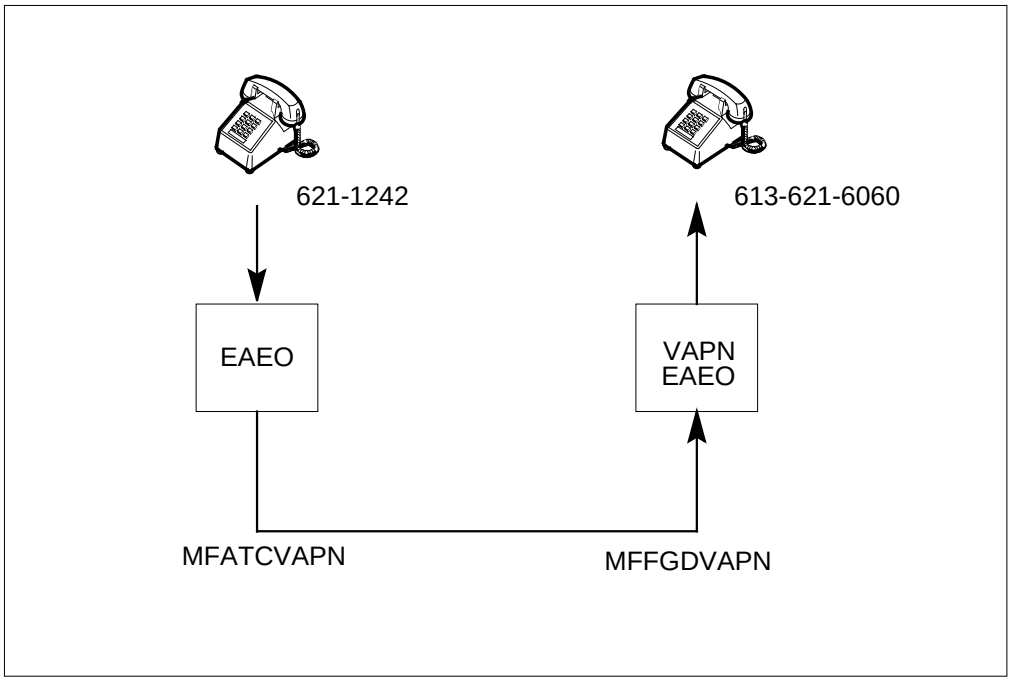

Sample output from TRAVER appears in the following example. In this example, TRAVER examines a ten-digit MF call with dialed digits 1-613-621-6060. This call is from a POTS station at EAEO.

TRAVER 3 - EAEO line to trunk

```
>TRAVER L  6211242 16136216060 B
TABLE LINEATTR
855 1FR NONE NT FR01 0 613 VEO1 L613 N TOPS N 10 NIL...
... NILSFC VAPNLATA 0 NIL NIL 00 N
LCABILL OFF – BILLING DONE ON BASIS OF CALLTYPE
TABLE DNATTRS
TUPLE NOT FOUND
TABLE STDPRTCT
VEO1 ( 1) ( 0)
 . SUBTABLE STDPRT
 . 16 19 N DD 1 NA
 . SUBTABLE AMAPRT
 . KEY NOT FOUND
 . DEFAULT VALUE IS:   NONE OVRNONE  N
TABLE HNPACONT
613 374 1 ( 98) ( 1) ( 84) ( 0)
 . SUBTABLE HNPACODE
 . 613 613 FNPA 0
TABLE FNPACONT
613 31 – ( 20) ( 0) ( 14)
 . SUBTABLE FNPACODE
 . 621 629 3 Y
 . SUBTABLE RTEREF
 .  . 3 N D COML_ISUPCAP2W 3 N N
 . EXIT TABLE RTEREF
EXIT TABLE FNPACONT
TABLE LCASCRCN
613 L613 ( 13) MNDT N
 . SUBTABLE LCASCR
 . TUPLE NOT FOUND. DEFAULT IS NON–LOCAL
TABLE PFXTREAT
MNDT DD N DD UNDT
TABLE CLSVSCRC
KEY NOT FOUND
DEFAULT IS TO LEAVE XLA RESULT UNCHANGED
TABLE LENFEAT
HOST 00 1 10 01 S PIC PIC VAPNM Y
OVERLAP CARRIER SELECTION (OCS) APPLIES
TABLE OCCINFO
VAPNM 564 EAP Y Y Y Y N Y N Y Y Y LONG 0 FGRPD N N Y N N...
... N Y N N Y
```

Virtual Access to Private Networks (continued)

TRAVER 3 EAEO - line to trunk (continued)

```
TABLE EASAC
TUPLE NOT FOUND
TABLE LATAXLA
VAPNLATA 6 INTER INTER STD
TABLE STDPRTCT
VEO1 ( 1) ( 0)
 . SUBTABLE STDPRT
 . 10564 10564 EA DD 5 P VEO6 VAPNM Y OFRT 668 6 25 Y
 .  . TABLE OFRT
 .  .  668 CND EA INTNL SK 2
 .  .      N D MFATCVAPN 0 D N
 .  .      CND ALWAYS SK 1
 .  .      N D MFATCVAPN 15 D116 N
 .  . EXIT TABLE OFRT
 . TABLE STDPRTCT
 . VEO6 ( 1) ( 0)
 .  . SUBTABLE STDPRT
 .  . 16 16 EA DD 1 N VAPNM Y OFRT 668 6 25 Y
 .  .  . TABLE OFRT
 .  .  .  668 CND EA INTNL SK 2
 .  .  .      N D MFATCVAPN 0 D N
 .  .  .      CND ALWAYS SK 1
 .  .  .      N D MFATCVAPN 15 D116 N
 .  .  . EXIT TABLE OFRT
Using Equal Access (EA) route OFRT 668 from...
... Pretranslation
TABLE OFRT
668 CND EA INTNL SK 2
  N D MFATCVAPN 0 D N
  CND ALWAYS SK 1
  N D MFATCVAPN 15 D116 N
EXIT TABLE OFRT

+++ TRAVER: SUCCESSFUL CALL TRACE +++

DIGIT TRANSLATION ROUTES
1 MFATCVAPN       D6136216060  ST
TREATMENT ROUTES.  TREATMENT IS: GNCT
1 *OFLO
2 LKOUT
+++ TRAVER: SUCCESSFUL CALL TRACE +++
```

Sample output from TRAVER command appears in the following example. In this example, TRAVER examines a ten-digit MF call from trunk MFFGDVAPN.

TRAVER 4 - VAPN node - trunk to line

```
TRAVER TR MFFGDVAPN 6136216060 B
Please enter ANI digits:
>6136211242
Table TRKGRP
MFFGDVAPN IBNTI 0 NPDGP NCRT COMKODAK 0 66 N ANSDISC 0 Y...
... N N N N Y Y 0 0 N N N N
    Y FGD Y Y $ $
Table CGNSCRN
6136211242 6136211242 COMKODAK 0 N
Table NCOS
COMKODAK 0 0 0 ZDK0 ( OHQ 0 TONE_OHQ) ( CBQ 0 3 N 2)...
...( ACR N)$
Table CUSTHEAD: CUSTGRP, PRELIMXLA, CUSTXLA, FEATXLA,...
... VACTRMT, AND DIGCOL
COMKODAK PXDK CXDK CUSTFEAT 0 ZDK
TABLE DIGCOL
ZDK 6 COL L 1
NCOS PRELIM XLA name is NIL. Go to next XLA name.
TABLE IBNXLA: XLANAME PXDK
PXDK 613 NET N N 3 N NDGT N N DOD N 0 NONE
TABLE DIGCOL
NDGT specified: digits collected individually
TABLE LINEATTR
0 1FR NONE NT FR01 0 613 P621 L613 N TOPS N 10 NIL NILSFC...
... NILLATA 0 NIL NIL 00 N
LCABILL OFF – BILLING DONE ON BASIS OF CALLTYPE
TABLE STDPRTCT
P621 ( 1) ( 0)
 . SUBTABLE STDPRT
 . 6216 624 N NP 0 NA
 . SUBTABLE AMAPRT
 . KEY NOT FOUND
 . DEFAULT VALUE IS:   NONE OVRNONE  N
TABLE HNPACONT
613 374 1 ( 98) ( 1) ( 84) ( 0)
 . SUBTABLE HNPACODE
 . 6216 6219 DN 613 621
TABLE THOUGRP
613 621 6 Y C
TABLE DN
613 621 6060 L HOST 00 0 00 13
```

Virtual Access to Private Networks (continued)

TRAVER 4 - VAPN node - trunk to line (continued)

```
TABLE DNATTRS
TUPLE NOT FOUND
TABLE LCASCRCN
613 L613 ( 13) MNDT N
 . SUBTABLE LCASCR
 . 621 623
TABLE PFXTREAT
MNDT NP Y NP UNDT
TABLE CLSVSCRC
KEY NOT FOUND
DEFAULT IS TO LEAVE XLA RESULT UNCHANGED

+++ TRAVER: SUCCESSFUL CALL TRACE +++

DIGIT TRANSLATION ROUTES
1 LINE                  6136216060         ST
TREATMENT ROUTES.  TREATMENT IS: GNCT
1 T120
+++ TRAVER: SUCCESSFUL CALL TRACE +++
```

Seven-digit MF call

The following TRAVER examples describe translations mechanisms for seven-digit MF calls.

- TRAVER 5: The MDC station at EAEO dials 8-6216060 (VAPNM). Outpulses called digits of 6216060.
- TRAVER 6: Trunk MFFGDVAPN at the VAPN node receives these digits. VAPN screens the ANI and routes to a line.

Examples of TRAVER appear in the following figure.

Virtual Access to Private Networks (continued)

Seven-digit MF call example

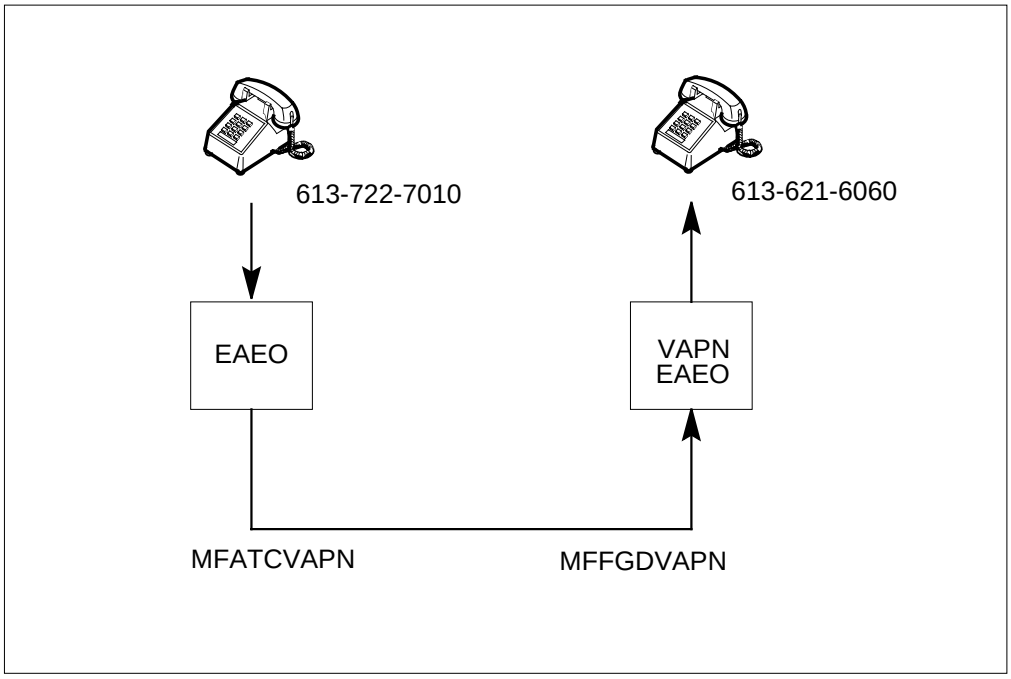

Sample output from TRAVER appears in the following example. In this example, TRAVER examines a seven-digit MF call from an MDC station at EAEO with dialed digits 8-6216060.

Virtual Access to Private Networks (continued)

TRAVER 5- EAEO line to trunk

```
>TRAVER L 7227010 86216060 B
TABLE KSETLINE
HOST 00 0 10 09 1 DN Y 7227010 COMKODAK 0 0 613 (CWT)...
... (3WC) $
TABLE DNATTRS
TUPLE NOT FOUND
TABLE NCOS
COMKODAK 0 0 0 ZDK0 ( OHQ 0 TONE_OHQ) ( CBQ 0 3 N 2)...
...( ACR N)$
Table CUSTHEAD: CUSTGRP, PRELIMXLA, CUSTXLA, FEATXLA,...
... VACTRMT, AND DIGCOL
COMKODAK PXDK CXDK CUSTFEAT 0 ZDK
TABLE DIGCOL
ZDK 8 POTS N
NCOS PRELIM XLA name is NIL. Go to next XLA name.
TABLE IBNXLA: XLANAME PXDK
TUPLE NOT FOUND
Default is to go to next XLA name.
TABLE IBNXLA: XLANAME CXDK
CXDK 8 NET N Y 1 N NDGT N N GEN ( LATTR 857) ( EA VAPNM Y...
... 0)$
TABLE DIGCOL
NDGT specified: digits collected individually
TABLE LINEATTR
857 1FR NONE NT FR01 0 613 VEO8 L613 N TOPS N 10 NIL...
... NILSFC VAPNLATA 0 NIL NIL 00 N
LCABILL OFF – BILLING DONE ON BASIS OF CALLTYPE
TABLE STDPRTCT
VEO8 ( 1) ( 0)
 . SUBTABLE STDPRT
 . 6 9 EA DD 0 N VAPNM Y OFRT 668 6 25 Y
 .  . TABLE OFRT
 .  . 668 CND EA INTNL SK 2
 .  .   N D MFATCVAPN 0 D N
 .  .   CND ALWAYS SK 1
 .  .   N D MFATCVAPN 15 D116 N
 .  . EXIT TABLE OFRT
 . SUBTABLE AMAPRT
 . KEY NOT FOUND
 . DEFAULT VALUE IS:  NONE OVRNONE N
OVERLAP CARRIER SELECTION (OCS) APPLIES
```

TRAVER 5 - EAEO line to trunk (continued)

```
TABLE OCCINFO
VAPNM 564 EAP Y Y Y Y N Y N Y Y Y LONG 0 FGRPD N N Y N N...
... N Y N N Y
TABLE EASAC
TUPLE NOT FOUND
TABLE LATAXLA
VAPNLATA 6 INTER INTER STD
Using Equal Access (EA) route   OFRT  668 from...
... Pretranslation
TABLE OFRT
 668 CND EA INTNL SK 2
     N D MFATCVAPN 0 D N
     CND ALWAYS SK 1
     N D MFATCVAPN 15 D116 N
EXIT TABLE OFRT

+++ TRAVER: SUCCESSFUL CALL TRACE +++

DIGIT TRANSLATION ROUTES
1 MFATCVAPN       D6216060    ST
TREATMENT ROUTES.  TREATMENT IS: GNCT
1 *OFLO
2 LKOUT
+++ TRAVER: SUCCESSFUL CALL TRACE +++
```

Sample output from TRAVER appears in the following example. In this example, TRAVER examines a seven-digit MF call at trunk MFFGDVAPN.

Virtual Access to Private Networks (continued)

TRAVER 6 - VAPN node - trunk to line

```
>TRAVER TR MFFGDVAPN 6216060 B
Please enter ANI digits:
>6137227010
Table TRKGRP
MFFGDVAPN IBNTI 0 NPDGP NCRT COMKODAK 0 66 N ANSDISC 0 Y...
... N N N N Y Y 0 0 N N N N
    Y FGD Y Y $ $
Table CGNSCRN
6137227010   6137227010 COMKODAK 0 N
Table NCOS
COMKODAK 0 0 0 ZDK0 ( OHQ 0 TONE_OHQ) ( CBQ 0 3 N 2)...
...( ACR N)$
Table CUSTHEAD: CUSTGRP, PRELIMXLA, CUSTXLA, FEATXLA,...
... VACTRMT, AND DIGCOL
COMKODAK PXDK CXDK CUSTFEAT 0 ZDK
TABLE DIGCOL
ZDK 6 COL L 1
NCOS PRELIM XLA name is NIL. Go to next XLA name.
TABLE IBNXLA: XLANAME PXDK
PXDK 621 NET N N 0 N NDGT N N DOD N 0 NONE
TABLE DIGCOL
NDGT specified: digits collected individually
TABLE LINEATTR
0 1FR NONE NT FR01 0 613 P621 L613 N TOPS N 10 NIL NILSFC...
... NILLATA 0 NIL NIL 00 N
LCABILL OFF – BILLING DONE ON BASIS OF CALLTYPE
TABLE STDPRTCT
P621 ( 1) ( 0)
 . SUBTABLE STDPRT
 . 6216 624 N NP 0 NA
 . SUBTABLE AMAPRT
 . KEY NOT FOUND
 . DEFAULT VALUE IS:   NONE OVRNONE  N
TABLE HNPACONT
613 374 1 ( 98) ( 1) ( 84) ( 0)
 . SUBTABLE HNPACODE
 . 6216 6219 DN 613 621
TABLE THOUGRP
613 621 6 Y C
TABLE DN
613 621 6060 L HOST 00 0 00 13
```

TRAVER 6 - VAPN node - trunk to line (continued)

```
TABLE DNATTRS
TUPLE NOT FOUND
TABLE LCASCRCN
613 L613 ( 13) MNDT N
 . SUBTABLE LCASCR
 . 621 623
 TABLE PFXTREAT
 MNDT NP Y NP UNDT
 TABLE CLSVSCRC
 KEY NOT FOUND
 DEFAULT IS TO LEAVE XLA RESULT UNCHANGED

 +++ TRAVER: SUCCESSFUL CALL TRACE +++

 DIGIT TRANSLATION ROUTES
 1 LINE       6136216060   ST
 TREATMENT ROUTES.  TREATMENT IS: GNCT
 1 T120
 +++ TRAVER: SUCCESSFUL CALL TRACE +++
```

International MF call, outside WZ1

The following TRAVER examples describe translations mechanisms for an international MF call, outside WZ1.

- TRAVER 7a: The POTS station at EAEO dials 10564-011-55-211239 or
- TRAVER 7b: The MDC station at EAEO dials 8-011-55-211239 (VAPNM). Both stations outpulse called digits of 116564055 and 55211239. The call is international and requires the additional phase.
- TRAVER 8: Trunk MFFGDVAPN at VAPN node receives these digits. The VAPN screens ANI and routes call to trunk ISUPIBN2W to INTL DEST with called digits 6211239.
- TRAVER 9: Trunk ISUPIBN2W at INTL DEST receives these digits and routes the call to a line.

Examples of TRAVER appear in the following figure.

Virtual Access to Private Networks (continued)

International MF call, outside WZ1 example

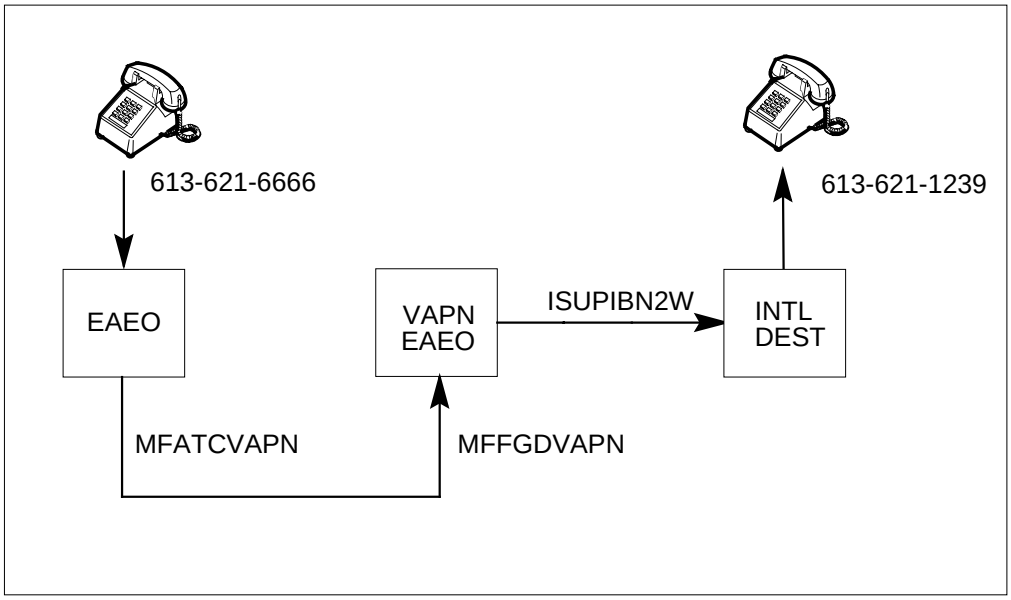

Sample output from TRAVER appears in the following example. In this example, TRAVER examines an international MF outside WZ1 call. The call is from a POTS station at EAEO with dialed digits 10564-011-55-211239.

TRAVER 7a - EAEO - POTS line to trunk

```
>TRAVER L 6216666  1056401155211239 B
TABLE LINEATTR
855 1FR NONE NT FR01 0 613 VEO1 L613 N TOPS N 10 NIL...
... NILSFC VAPNLATA 0 NIL NIL 00 N
LCABILL OFF – BILLING DONE ON BASIS OF CALLTYPE
TABLE DNATTRS
TUPLE NOT FOUND
TABLE STDPRTCT
VEO1 ( 1) ( 0)
 . SUBTABLE STDPRT
 . 10564 10564 EA DD 5 P VEO6 VAPNM Y OFRT 668 6 25 Y
 .  . TABLE OFRT
 .  .  668 CND EA INTNL SK 2
 .  .      N D MFATCVAPN 0 D N
 .  .      CND ALWAYS SK 1
 .  .      N D MFATCVAPN 15 D116 N
 .  . EXIT TABLE OFRT
 . TABLE STDPRTCT
 . VEO6 ( 1) ( 0)
 .  . SUBTABLE STDPRT
 .  . 011 011 EA DD 3 T IN VAPNM N
 . SUBTABLE AMAPRT
 . KEY NOT FOUND
 . DEFAULT VALUE IS:   NONE OVRNONE  N
TABLE CCTR
 55 T 055 8 12 T OFRT 889 Y
TABLE OFRT
 889 N D ISUPIBN2W 2 6 N
EXIT TABLE OFRT
OVERLAP CARRIER SELECTION (OCS) APPLIES
TABLE OCCINFO
VAPNM 564 EAP Y Y Y Y N Y N Y Y Y LONG 0 FGRPD N N Y N N...
... N Y N N Y
TABLE EASAC
TUPLE NOT FOUND
Using Equal Access (EA) route   OFRT  668 from...
... Pretranslation
TABLE OFRT
 668 CND EA INTNL SK 2
     N D MFATCVAPN 0 D N
     CND ALWAYS SK 1
```

Virtual Access to Private Networks (continued)

TRAVER 7a - EAEO - POTS line to trunk (continued)

```
     N D MFATCVAPN 15 D116 N
EXIT TABLE OFRT

+++ TRAVER: SUCCESSFUL CALL TRACE +++

DIGIT TRANSLATION ROUTES
1 MFATCVAPN             D116               ST
TREATMENT ROUTES.  TREATMENT IS: GNCT
1 *OFLO
2 LKOUT
+++ TRAVER: SUCCESSFUL CALL TRACE +++
```

Sample output from TRAVER appears in the following example. In this example, TRAVER examines an international MF call from an MDC station at EAEO with dialed digits 8-011-55-211239.

TRAVER 7b - EAEO - MDC line to trunk

```
>TRAVER L 6216666 801155211239 B
TABLE KSETLINE
HOST 00 0 10 09 1 DN Y 6216666 COMKODAK 0 0 613 (CWT)...
... (3WC) $
TABLE DNATTRS
TUPLE NOT FOUND
Table NCOS
COMKODAK 0 0 0 ZDK0 ( OHQ 0 TONE_OHQ) ( CBQ 0 3 N 2)...
...( ACR N)$
Table CUSTHEAD: CUSTGRP, PRELIMXLA, CUSTXLA, FEATXLA,...
... VACTRMT, AND DIGCOL
COMKODAK PXDK CXDK CUSTFEAT 0 ZDK
TABLE DIGCOL
ZDK 8 POTS N
NCOS PRELIM XLA name is NIL. Go to next XLA name.
TABLE IBNXLA: XLANAME PXDK
TUPLE NOT FOUND
Default is to go to next XLA name.
TABLE IBNXLA: XLANAME CXDK
CXDK 8 NET N Y 1 N NDGT N N GEN ( LATTR 857) ( EA VAPNM Y...
... 0)$
TABLE DIGCOL
NDGT specified: digits collected individually
TABLE LINEATTR
857 1FR NONE NT FR01 0 613 VEO8 L613 N TOPS N 10 NIL...
... NILSFC VAPNLATA 0 NIL NIL 00 N
LCABILL OFF – BILLING DONE ON BASIS OF CALLTYPE
TABLE STDPRTCT
VEO8 ( 1) ( 0)
 . SUBTABLE STDPRT
 . 011 011 EA DD 3 T IN VAPNM Y OFRT 668 6 25 Y
 .  . TABLE OFRT
 .  .  668 CND EA INTNL SK 2
 .  .      N D MFATCVAPN 0 D N
 .  .      CND ALWAYS SK 1
 .  .      N D MFATCVAPN 15 D116 N
 .  . EXIT TABLE OFRT
 . SUBTABLE AMAPRT
 . KEY NOT FOUND
 . DEFAULT VALUE IS:   NONE OVRNONE  N
TABLE CCTR
```

Virtual Access to Private Networks (continued)

TRAVER 7b - EAEO - MDC line to trunk (continued)

```
55 T 055 8 12 T OFRT 889 Y
TABLE OFRT
 889 N D ISUPIBN2W 2 6 N
EXIT TABLE OFRT
OVERLAP CARRIER SELECTION (OCS) APPLIES
TABLE OCCINFO
VAPNM 564 EAP Y Y Y Y N Y N Y Y Y LONG 0 FGRPD N N Y N N...
... N Y N N Y
TABLE EASAC
TUPLE NOT FOUND
Using Equal Access (EA) route   OFRT  668 from...
... Pretranslation
TABLE OFRT
 668 CND EA INTNL SK 2
     N D MFATCVAPN 0 D N
     CND ALWAYS SK 1
     N D MFATCVAPN 15 D116 N
EXIT TABLE OFRT

+++ TRAVER: SUCCESSFUL CALL TRACE +++

DIGIT TRANSLATION ROUTES
1 MFATCVAPN             D116               ST
TREATMENT ROUTES.  TREATMENT IS: GNCT
1 *OFLO
2 LKOUT
+++ TRAVER: SUCCESSFUL CALL TRACE +++
```

Sample output from TRAVER appears in the following example. In this example, TRAVER examines an international MF call at trunk MFFGDVAPN.

TRAVER 8 - VAPN node - trunk to trunk

```
>TRAVER TR MFFGDVAPN 55211239 B
Please enter ANI digits:
>6136216666
Table TRKGRP
MFFGDVAPN IBNTI 0 NPDGP NCRT COMKODAK 0 0 N ANSDISC 0 Y N...
... N N N Y Y 0 0 N N N N Y FGD Y Y $ $
Table CGNSCRN
6136216666 6136216666 COMKODAK 66 N
Table NCOS
COMKODAK 66 0 0 ZDK66 ( XLAS VAPNXLAI NXLA NDGT) ( OHQ 0...
... TONE_OHQ) ( CBQ 0 3 N 2)$
Table CUSTHEAD: CUSTGRP, PRELIMXLA, CUSTXLA, FEATXLA,...
... VACTRMT, AND DIGCOL
COMKODAK PXDK CXDK CUSTFEAT 0 ZDK
TABLE DIGCOL
ZDK 5 COL L 1
TABLE IBNXLA: XLANAME VAPNXLAI
VAPNXLAI 5 NET N N 0 N ZDK N N DOD N 856 NONE
TABLE DIGCOL
ZDK 5 COL L 1
TABLE LINEATTR
856 1FR NONE NT FR01 0 613 VIN1 L613 N TOPS N 10 NIL...
... NILSFC VAPNLATA 0 NIL NIL 00 N
LCABILL OFF – BILLING DONE ON BASIS OF CALLTYPE
TABLE STDPRTCT
VIN1 ( 1) ( 0)
 . SUBTABLE STDPRT
 . 55 55 N DD 0 IN
 . SUBTABLE AMAPRT
 . KEY NOT FOUND
 . DEFAULT VALUE IS:   NONE OVRNONE  N
TABLE CCTR
55 T 055 8 12 T OFRT 889 Y
TABLE OFRT
 889 N D ISUPIBN2W 2 6 N
EXIT TABLE OFRT

+++ TRAVER: SUCCESSFUL CALL TRACE +++

DIGIT TRANSLATION ROUTES
1 ISUPIBN2W             6211239            ST
TREATMENT ROUTES.  TREATMENT IS: GNCT
1 T120
+++ TRAVER: SUCCESSFUL CALL TRACE +++
```

Virtual Access to Private Networks (continued)

Sample output from TRAVER appears in the following example. In this example, TRAVER examines an international MF call from trunk ISUPIBN2W.

TRAVER 9 - International node - trunk to line

```
>TRAVER TR ISUPIBN2W 6211239 B
Table TRKGRP
ISUPIBN2W IBNT2 0 ELO NCRT COMKODAK 0 MIDL 0 N ANSDISC 0...
... Y N N N N N N Y 0 0 N 0
    0 0 0 N N N N N N N N N $
Table NCOS
COMKODAK 0 0 0 ZDK0 ( OHQ 0 TONE_OHQ) ( CBQ 0 3 N 2)...
...( ACR N)$
Table CUSTHEAD: CUSTGRP, PRELIMXLA, CUSTXLA, FEATXLA,...
... VACTRMT, AND DIGCOL
COMKODAK PXDK CXDK CUSTFEAT 0 ZDK
TABLE DIGCOL
ZDK 6 COL L 1
NCOS PRELIM XLA name is NIL. Go to next XLA name.
TABLE IBNXLA: XLANAME PXDK
PXDK 621 NET N N 0 N NDGT N N DOD N 0 NONE
TABLE DIGCOL
NDGT specified: digits collected individually
TABLE LINEATTR
0 1FR NONE NT FR01 0 613 P621 L613 N TOPS N 10 NIL NILSFC...
... NILLATA 0 NIL NIL 00 N
LCABILL OFF – BILLING DONE ON BASIS OF CALLTYPE
TABLE STDPRTCT
P621 ( 1) ( 0)
 . SUBTABLE STDPRT
 . 6211 6213 N NP 0 NA
 . SUBTABLE AMAPRT
 . KEY NOT FOUND
 . DEFAULT VALUE IS:   NONE OVRNONE  N
TABLE HNPACONT
613 374 1 ( 98) ( 1) ( 84) ( 0)
 . SUBTABLE HNPACODE
 . 6211 6213 DN 613 621
TABLE THOUGRP
613 621 1 Y C
TABLE DN
613 621 1239 L HOST 00 0 07 18
TABLE DNATTRS
TUPLE NOT FOUND
TABLE LCASCRCN
613 L613 ( 13) MNDT N
```

Virtual Access to Private Networks (continued)

TRAVER 9 - International node - trunk to line (continued)

```
 . SUBTABLE LCASCR
 . 621 623
TABLE PFXTREAT
MNDT NP Y NP UNDT
TABLE CLSVSCRC
KEY NOT FOUND
DEFAULT IS TO LEAVE XLA RESULT UNCHANGED

+++ TRAVER: SUCCESSFUL CALL TRACE +++

DIGIT TRANSLATION ROUTES
1 LINE        6136211239  ST
TREATMENT ROUTES.  TREATMENT IS: GNCT
1 T120
+++ TRAVER: SUCCESSFUL CALL TRACE +++
```

International MF, inside WZ1

The following TRAVER examples describe translations mechanisms for an international MF, inside WZ1 call.

- TRAVER 10: The POTS station at EAEO dials 011-13-36216060 (VAPNM). The POTS station outpulses called digits of 116664013 and 1336216060. The 013 digits of this procedure appear like an inside-WZ1 call to VAPN.
- TRAVER 11: Trunk MFFGDVAPN at VAPN receives these called digits. The VAPN feature screens the ANI and routes the call to a line.

An example of TRAVER appears in the following example.

International MF, inside WZ1 call example

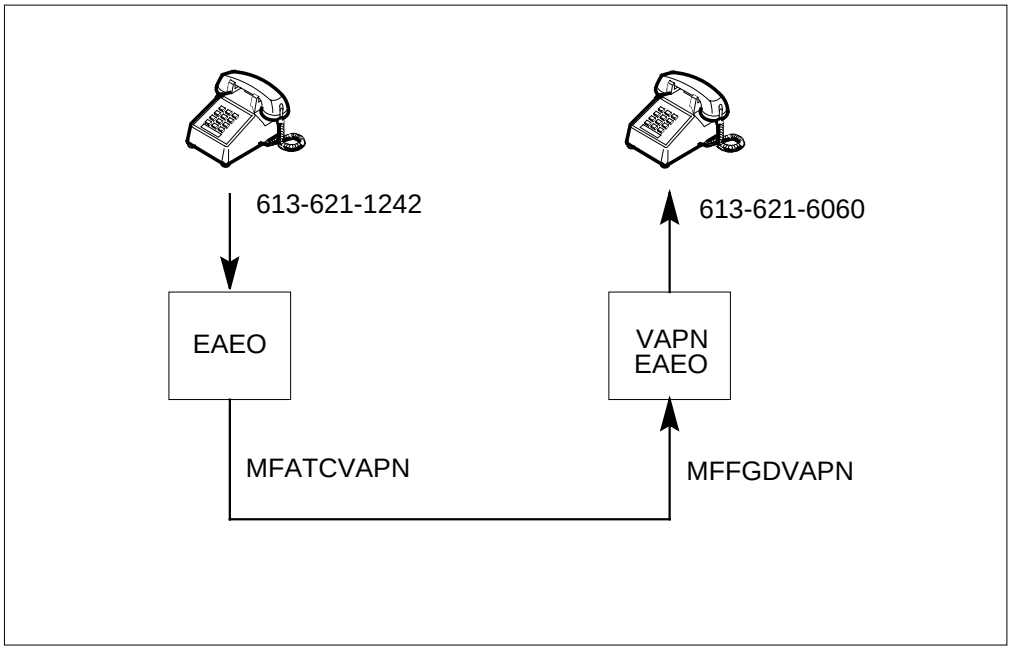

Sample output from TRAVER appears in the following example. In this example, TRAVER examines an international MF, inside WZ1 call. The call is from a POTS station at EAEO with dialed digits 011-13-36216060.

Virtual Access to Private Networks (continued)

TRAVER 10 - EAEO - line to trunk

```
>TRAVER L 6211242  0111336216060 B
TABLE LINEATTR
855 1FR NONE NT FR01 0 613 VEO1 L613 N TOPS N 10 NIL...
... NILSFC VAPNLATA 0 NIL NIL 00 N
LCABILL OFF – BILLING DONE ON BASIS OF CALLTYPE
TABLE DNATTRS
TUPLE NOT FOUND
TABLE STDPRTCT
VEO1 ( 1) ( 0)
 . SUBTABLE STDPRT
 . 011 011 N DD 3 IN
 . SUBTABLE AMAPRT
 . KEY NOT FOUND
 . DEFAULT VALUE IS:   NONE OVRNONE  N
TABLE CCTR
13 T 013 10 10 T OFRT 668 Y
TABLE OFRT
 668 CND EA INTNL SK 2
     N D MFATCVAPN 0 D N
     CND ALWAYS SK 1
     N D MFATCVAPN 15 D116 N
EXIT TABLE OFRT
TABLE LENFEAT
HOST 00 1 10 01 S PIC PIC VAPNM Y
OVERLAP CARRIER SELECTION (OCS) APPLIES
TABLE OCCINFO
VAPNM 564 EAP Y Y Y Y N Y N Y Y Y LONG 0 FGRPD Y N Y N N...
... N Y N N Y
TABLE EASAC
TUPLE NOT FOUND
TABLE STDPRTCT
VEO1 ( 1) ( 0)
 . SUBTABLE STDPRT
 . 10564 10564 EA DD 5 P VEO6 VAPNM Y OFRT 668 6 25 Y
 .  . TABLE OFRT
 .  .  668 CND EA INTNL SK 2
 .  .      N D MFATCVAPN 0 D N
 .  .      CND ALWAYS SK 1
 .  .      N D MFATCVAPN 15 D116 N
 .  . EXIT TABLE OFRT
 . TABLE STDPRTCT
```

Virtual Access to Private Networks (continued)

TRAVER 10 - EAEO - line to trunk (continued)

```
 . VEO6 ( 1) ( 0)
 .  . SUBTABLE STDPRT
 .  . 011 011 EA DD 3 T IN VAPNM N

+++ TRAVER: SUCCESSFUL CALL TRACE +++

DIGIT TRANSLATION ROUTES
1 MFATCVAPN        D116    ST
TREATMENT ROUTES.  TREATMENT IS: GNCT
1 *OFLO
2 LKOUT
+++ TRAVER: SUCCESSFUL CALL TRACE +++
```

Sample output from TRAVER appears in the following example. In this example, TRAVER examines output from an international MF, inside WZ1 call from trunk MFFGDVAPN.

Virtual Access to Private Networks (continued)

TRAVER 11 - VAPN node - trunk to line

```
>TRAVER TR MFFGDVAPN 1336216060 B
 Please enter ANI digits:
>6136211242
 Table TRKGRP
 MFFGDVAPN IBNTI 0 NPDGP NCRT COMKODAK 0 66 N ANSDISC 0 Y...
 ... N N N N Y Y 0 0 N N N N
  Y FGD Y Y $ $
 Table CGNSCRN
 6136211242 6136211242 COMKODAK 0 N
 Table NCOS
 COMKODAK 0 0 0 ZDK0 ( OHQ 0 TONE_OHQ) ( CBQ 0 3 N 2)...
 ...( ACR N)$
 Table CUSTHEAD: CUSTGRP, PRELIMXLA, CUSTXLA, FEATXLA,...
 ... VACTRMT, AND DIGCOL
 COMKODAK PXDK CXDK CUSTFEAT 0 ZDK
 TABLE DIGCOL
 ZDK 1 RPT
 NCOS PRELIM XLA name is NIL. Go to next XLA name.
 TABLE IBNXLA: XLANAME PXDK
 TUPLE NOT FOUND
 Default is to go to next XLA name.
 TABLE IBNXLA: XLANAME CXDK
 CXDK 13 NET N N 3 N NDGT N N DOD N 0 NONE
 TABLE DIGCOL
 NDGT specified: digits collected individually
 TABLE LINEATTR
 0 1FR NONE NT FR01 0 613 P621 L613 N TOPS N 10 NIL...
 ... NILSFC NILLATA 0 NIL NIL 00 N
 LCABILL OFF – BILLING DONE ON BASIS OF CALLTYPE
 TABLE STDPRTCT
 P621 ( 1) ( 0)
  . SUBTABLE STDPRT
  . 6216 624 N NP 0 NA
  . SUBTABLE AMAPRT
  . KEY NOT FOUND
  . DEFAULT VALUE IS:   NONE OVRNONE  N
 TABLE HNPACONT
 613 374 1 ( 98) ( 1) ( 84) ( 0)
  . SUBTABLE HNPACODE
  . 6216 6219 DN 613 621
 TABLE THOUGRP
```

TRAVER 11 - VAPN node - trunk to line (continued)

```
613 621 6 Y C
 TABLE DN
 613 621 6060 L HOST 00 0 00 13
 TABLE DNATTRS
 TUPLE NOT FOUND
 TABLE LCASCRCN
 613 L613 ( 13) MNDT N
   . SUBTABLE LCASCR
   . 621 623
 TABLE PFXTREAT
 MNDT NP Y NP UNDT
 TABLE CLSVSCRC
 KEY NOT FOUND
 DEFAULT IS TO LEAVE XLA RESULT UNCHANGED

 +++ TRAVER: SUCCESSFUL CALL TRACE +++

 DIGIT TRANSLATION ROUTES
 1 LINE        6136216060  ST
 TREATMENT ROUTES.  TREATMENT IS: GNCT
 1 T120
 +++ TRAVER: SUCCESSFUL CALL TRACE +++
```

Seven-digit ISUP

The following TRAVER examples describe translations mechanisms for seven-digit ISUP calls.

- TRAVER 12: The POTS station at EAEO dials 10566-1-621-6060. The POTs station outpulses called digits of 6216060.
- TRAVER 13: Trunk ISUPFGDVAPN at VAPN node receives these digits. The VAPN screens the ANI and routes the call to a line.

The following figure describes TRAVER examples.

Virtual Access to Private Networks (continued)

Seven-digit ISUP call example

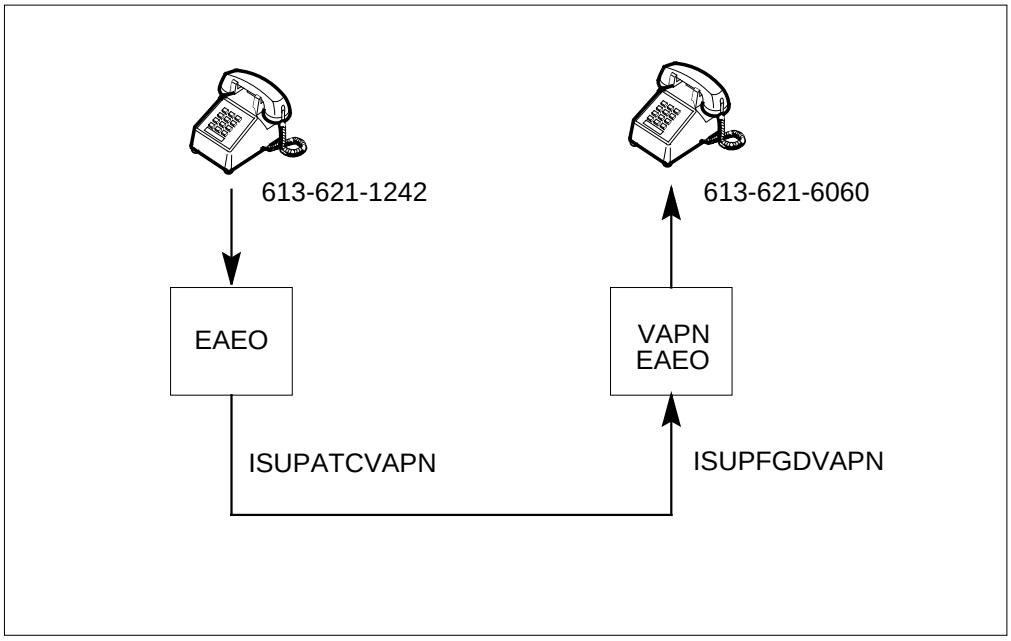

Sample output from TRAVER appears in the following example. In this example, TRAVER examines a seven-digit ISUP from a POTS station at EAEO with dialed digits 10566-1-6216060.

TRAVER 12 - EAEO - line to trunk

```
>TRAVER L 6211242 1056616216060 B
TABLE LINEATTR
855 1FR NONE NT FR01 0 613 VEO1 L613 N TOPS N 10 NIL...
... NILSFC VAPNLATA 0 NIL NIL 00 N
LCABILL OFF – BILLING DONE ON BASIS OF CALLTYPE
TABLE DNATTRS
TUPLE NOT FOUND
TABLE STDPRTCT
VEO1 ( 1) ( 0)
 . SUBTABLE STDPRT
 . 10566 10566 EA DD 5 P VEO5 VAPN Y OFRT 667 6 25 Y
 .  . TABLE OFRT
 .  .  667 N D ISUPATCVAPN 0 $ N
 .  . EXIT TABLE OFRT
 . TABLE STDPRTCT
 . VEO5 ( 1) ( 0)
 .  . SUBTABLE STDPRT
 .  . 16 16 EA DD 1 N VAPN Y OFRT 667 6 25 Y
 .  .  . TABLE OFRT
 .  .  .  667 N D ISUPATCVAPN 0 $ N
 .  .  . EXIT TABLE OFRT
 . SUBTABLE AMAPRT
 . KEY NOT FOUND
 . DEFAULT VALUE IS:   NONE OVRNONE  N
OVERLAP CARRIER SELECTION (OCS) APPLIES
TABLE OCCINFO
VAPN 566 EAP Y Y Y Y N Y N Y Y Y LONG 0 FGRPD N N Y N N N...
... N N N N
TABLE EASAC
TUPLE NOT FOUND
TABLE LATAXLA
VAPNLATA 6 INTER INTER STD
Using Equal Access (EA) route   OFRT  667 from...
... Pretranslation
TABLE OFRT
667 N D ISUPATCVAPN 0 $ N
EXIT TABLE OFRT

+++ TRAVER: SUCCESSFUL CALL TRACE +++

DIGIT TRANSLATION ROUTES
  1 ISUPATCVAPN       6216060   ST
  TREATMENT ROUTES.  TREATMENT IS: GNCT
  1 *OFLO
  2 LKOUT
  +++ TRAVER: SUCCESSFUL CALL TRACE +++
```

Virtual Access to Private Networks (continued)

Sample output from TRAVER appears in the following example. In this example, TRAVER examines a seven-digit ISUP call at trunk ISUPFGDVAPN.

TRAVER 13 - VAPN node - trunk to line

```
>TRAVER TR ISUPFGDVAPN 6216060 B
Please enter ANI digits:
>6136211242
Table TRKGRP
ISUPFGDVAPN IBNTI 0 NPDGP NCRT COMKODAK 0 0 N ANSDISC 0 Y...
... N N N N Y Y 0 0 N N N
    N Y FGD Y Y $ $
Table CGNSCRN
6136211242 6136211242 COMKODAK 0 N
Table NCOS
COMKODAK 0 0 0 ZDK0 ( OHQ 0 TONE_OHQ) ( CBQ 0 3 N 2)$
Table CUSTHEAD: CUSTGRP, PRELIMXLA, CUSTXLA, FEATXLA,...
... VACTRMT, AND DIGCOL
COMKODAK PXDK CXDK CUSTFEAT 0 ZDK
TABLE DIGCOL
ZDK 6 COL L 1
NCOS PRELIM XLA name is NIL. Go to next XLA name.
TABLE IBNXLA: XLANAME PXDK
PXDK 621 NET N N 0 N NDGT N N DOD N 0 NONE
TABLE DIGCOL
NDGT specified: digits collected individually
TABLE LINEATTR
0 1FR NONE NT FR01 0 613 P621 L613 N TOPS N 10 NIL NILSFC...
... NILLATA 0 NIL NIL 00 N
LCABILL OFF – BILLING DONE ON BASIS OF CALLTYPE
TABLE STDPRTCT
P621 ( 1) ( 0)
 . SUBTABLE STDPRT
 . 6216 624 N NP 0 NA
 . SUBTABLE AMAPRT
 . KEY NOT FOUND
 . DEFAULT VALUE IS:   NONE OVRNONE  N
TABLE HNPACONT
613 374 1 ( 98) ( 1) ( 84) ( 0)
 . SUBTABLE HNPACODE
 . 6216 6219 DN 613 621
TABLE THOUGRP
613 621 6 Y C
TABLE DN
613 621 6060 L HOST 00 0 00 13
TABLE DNATTRS
```

TRAVER 13 - VAPN node - trunk to line (continued)

```
TUPLE NOT FOUND
TABLE LCASCRCN
613 L613 ( 13) MNDT N
   . SUBTABLE LCASCR
  . . 621 623
 TABLE PFXTREAT
 MNDT NP Y NP UNDT
 TABLE CLSVSCRC
 KEY NOT FOUND
 DEFAULT IS TO LEAVE XLA RESULT UNCHANGED

+++ TRAVER: SUCCESSFUL CALL TRACE +++

DIGIT TRANSLATION ROUTES
1 LINE                  6136216060         ST
TREATMENT ROUTES.  TREATMENT IS: GNCT
1 T120
+++ TRAVER: SUCCESSFUL CALL TRACE +++
```

International ISUP calls

The following TRAVER examples describe translations mechanisms for international ISUP calls.

- TRAVER 14a: The POTS station at EAEO dials 011-55-211239 (VAPN) or
- TRAVER 14b: The POTS station dials 10566-011-55-211239. Both stations outpulse called digits of 55211239, with an indicator that the call is international.
- TRAVER 15: Trunk ISUPFGDVAPN at VAPN node receives these digits. The VAPN screens the ANI and routes the call to trunk ISUPIBN2W with digits 6211239.
- TRAVER 16: Trunk ISUPIBN2W at INTL DEST receives digits and routes call to a line.

The following figure describes TRAVER examples.

Virtual Access to Private Networks (continued)

International ISUP call example

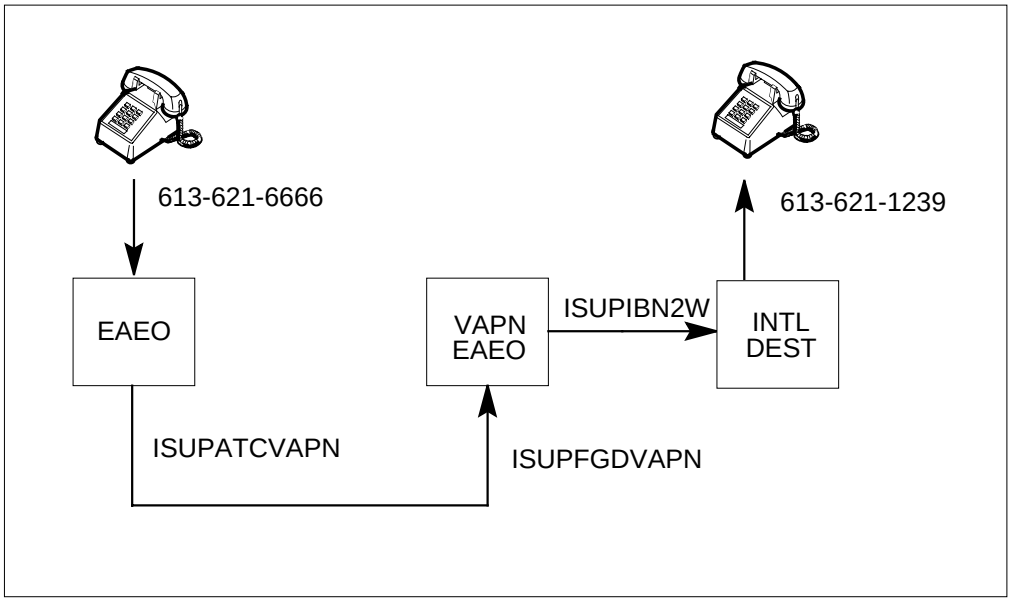

Sample output from TRAVER appears in the following example. In this example, TRAVER examines an international ISUP call from a POTS station at EAEO with dialed digits 011-55-211239.

TRAVER 14a - EAEO - line to trunk

```
>TRAVER L 6216666  01155211239 B
TABLE LINEATTR
855 1FR NONE NT FR01 0 613 VEO1 L613 N TOPS N 10 NIL...
... NILSFC VAPNLATA 0 NIL NIL 00 N
LCABILL OFF – BILLING DONE ON BASIS OF CALLTYPE
TABLE DNATTRS
TUPLE NOT FOUND
TABLE STDPRTCT
VEO1 ( 1) ( 0)
 . SUBTABLE STDPRT
 . 011 011 N DD 3 IN
 . SUBTABLE AMAPRT
 . KEY NOT FOUND
 . DEFAULT VALUE IS:   NONE OVRNONE  N
TABLE CCTR
55 T 055 8 12 T OFRT 889 Y
TABLE OFRT
889 N D ISUPIBN2W 2 6 N
EXIT TABLE OFRT
TABLE LENFEAT
HOST 00 1 10 01 S PIC PIC VAPN Y
OVERLAP CARRIER SELECTION (OCS) APPLIES
TABLE OCCINFO
VAPN 566 EAP Y Y Y Y N Y N Y Y Y LONG 0 FGRPD N N Y N N N...
... N N N N
TABLE EASAC
TUPLE NOT FOUND
TABLE STDPRTCT
VEO1 ( 1) ( 0)
 . SUBTABLE STDPRT
 . 10566 10566 EA DD 5 P VEO5 VAPN Y OFRT 667 6 25 Y
 .  . TABLE OFRT
 .  .  667 N D ISUPATCVAPN 0 $ N
 .  . EXIT TABLE OFRT
 . TABLE STDPRTCT
 . VEO5 ( 1) ( 0)
 .  . SUBTABLE STDPRT
 .  . 011 011 EA DD 3 T IN VAPN N

+++ TRAVER: SUCCESSFUL CALL TRACE +++
```

Virtual Access to Private Networks (continued)

TRAVER 14a - EAEO - line to trunk (continued)

```
DIGIT TRANSLATION ROUTES
1 ISUPATCVAPN      55211239  ST
TREATMENT ROUTES.  TREATMENT IS: GNCT
1 *OFLO
2 LKOUT
+++ TRAVER: SUCCESSFUL CALL TRACE +++
```

Sample output from TRAVER appears in the following example. In this example, TRAVER examines an international ISUP call from a POTS station with dialed digits 10566-011-55-211239.

TRAVER 14b - EAEO - line to trunk

```
>TRAVER L 6216666   1056601155211239 B
TABLE LINEATTR
855 1FR NONE NT FR01 0 613 VEO1 L613 N TOPS N 10 NIL...
... NILSFC VAPNLATA 0 NIL NIL 00 N
LCABILL OFF – BILLING DONE ON BASIS OF CALLTYPE
TABLE DNATTRS
TUPLE NOT FOUND
TABLE STDPRTCT
VEO1 ( 1) ( 0)
 . SUBTABLE STDPRT
 . 10566 10566 EA DD 5 P VEO5 VAPN Y OFRT 667 6 25 Y
 .  . TABLE OFRT
 .  .  667 N D ISUPATCVAPN 0 $ N
 .  . EXIT TABLE OFRT
 . TABLE STDPRTCT
 . VEO5 ( 1) ( 0)
 .  . SUBTABLE STDPRT
 .  . 011 011 EA DD 3 T IN VAPN N
 . SUBTABLE AMAPRT
 . KEY NOT FOUND
 . DEFAULT VALUE IS:   NONE OVRNONE  N
TABLE CCTR
55 T 055 8 12 T OFRT 889 Y
TABLE OFRT
 889 N D ISUPIBN2W 2 6 N
EXIT TABLE OFRT
OVERLAP CARRIER SELECTION (OCS) APPLIES
TABLE OCCINFO
VAPN 566 EAP Y Y Y Y N Y N Y Y Y LONG 0 FGRPD N N Y N N N...
... N N N N
```

Virtual Access to Private Networks (continued)

TRAVER 14b - EAEO - line to trunk (continued)

```
TABLE EASAC
TUPLE NOT FOUND
Using Equal Access (EA) route   OFRT  667 from...
... Pretranslation
TABLE OFRT
 667 N D ISUPATCVAPN 0 $ N
EXIT TABLE OFRT

+++ TRAVER: SUCCESSFUL CALL TRACE +++

DIGIT TRANSLATION ROUTES
1 ISUPATCVAPN      55211239   ST
TREATMENT ROUTES.  TREATMENT IS: GNCT
1 *OFLO
2 LKOUT
+++ TRAVER: SUCCESSFUL CALL TRACE +++
```

Sample output from TRAVER appears in the following example. In this example, TRAVER examines an international ISUP call at trunk ISUPFGDVAPN.

Virtual Access to Private Networks (continued)

TRAVER 15 - VAPN node - trunk to line

```
>TRAVER TR ISUPFGDVAPN 11756655211239 B
Please enter ANI digits:
>6136216666
Table TRKGRP
ISUPFGDVAPN IBNTI 0 NPDGP NCRT COMKODAK 0 66 N ANSDISC 0...
... Y N N N N Y Y 0 0 N N N
    N Y FGD Y Y $ $
Table CGNSCRN
6136216666 6136216666 COMKODAK 66 N
Table NCOS
COMKODAK 66 0 0 ZDK66 ( XLAS VAPNXLAI NXLA NDGT) ( OHQ 0...
... TONE_OHQ) ( CBQ 0 3 N 2)$
Table CUSTHEAD: CUSTGRP, PRELIMXLA, CUSTXLA, FEATXLA,...
... VACTRMT, AND DIGCOL
COMKODAK PXDK CXDK CUSTFEAT 0 ZDK
TABLE DIGCOL
ZDK 1 RPT
TABLE IBNXLA: XLANAME VAPNXLAI
VAPNXLAI 1 NET N N 0 N ZDK N N DOD N 856 NONE
TABLE DIGCOL
ZDK 1 RPT
TABLE LINEATTR
856 1FR NONE NT FR01 0 613 VIN1 L613 N TOPS N 10 NIL...
... NILSFC VAPNLATA 0 NIL NIL 00 N
LCABILL OFF – BILLING DONE ON BASIS OF CALLTYPE
TABLE STDPRTCT
VIN1 ( 1) ( 0)
 . SUBTABLE STDPRT
 . 117566 117566 N DD 6 IN
 . SUBTABLE AMAPRT
 . KEY NOT FOUND
 . DEFAULT VALUE IS:   NONE OVRNONE  N
TABLE CCTR
55 T 055 8 12 T OFRT 889 Y
TABLE OFRT
 889 N D ISUPIBN2W 2 6 N
EXIT TABLE OFRT

+++ TRAVER: SUCCESSFUL CALL TRACE +++

DIGIT TRANSLATION ROUTES
1 ISUPIBN2W       6211239   ST
TREATMENT ROUTES.  TREATMENT IS: GNCT
1 T120
+++ TRAVER: SUCCESSFUL CALL TRACE +++
```

Virtual Access to Private Networks (continued)

The following example describes the output from TRAVER when the output checks an international ISUP call at trunk ISUPIBN2W.

TRAVER 16 - INTL node - trunk to line

```
>TRAVER TR ISUPIBN2W 6211239 B
Table TRKGRP
ISUPIBN2W IBNT2 0 ELO NCRT COMKODAK 0 MIDL 0 N ANSDISC 0...
... Y N N N N N N Y 0 0 N 0
    0 0 0 N N N N N N N N N $
Table NCOS
COMKODAK 0 0 0 ZDK0 ( OHQ 0 TONE_OHQ) ( CBQ 0 3 N 2)...
...( ACR N)$
Table CUSTHEAD: CUSTGRP, PRELIMXLA, CUSTXLA, FEATXLA,...
... VACTRMT, AND DIGCOL
COMKODAK PXDK CXDK CUSTFEAT 0 ZDK
TABLE DIGCOL
ZDK 6 COL L 1
NCOS PRELIM XLA name is NIL. Go to next XLA name.
TABLE IBNXLA: XLANAME PXDK
PXDK 621 NET N N 0 N NDGT N N DOD N 0 NONE
TABLE DIGCOL
NDGT specified: digits collected individually
TABLE LINEATTR
0 1FR NONE NT FR01 0 613 P621 L613 N TOPS N 10 NIL NILSFC...
... NILLATA 0 NIL NIL 00 N
LCABILL OFF – BILLING DONE ON BASIS OF CALLTYPE
TABLE STDPRTCT
P621 ( 1) ( 0)
 . SUBTABLE STDPRT
 . 6211 6213 N NP 0 NA
 . SUBTABLE AMAPRT
 . KEY NOT FOUND
 . DEFAULT VALUE IS:   NONE OVRNONE  N
TABLE HNPACONT
613 374 1 ( 98) ( 1) ( 84) ( 0)
 . SUBTABLE HNPACODE
 . 6211 6213 DN 613 621
TABLE THOUGRP
613 621 1 Y C
TABLE DN
613 621 1239 L HOST 00 0 07 18
TABLE DNATTRS
TUPLE NOT FOUND
TABLE LCASCRCN
613 L613 ( 13) MNDT N
```

Virtual Access to Private Networks (continued)

TRAVER 16 - INTL node - trunk to line (continued)

```
.SUBTABLE LCASCR
.621 623
TABLE PFXTREAT
MNDT NP Y NP UNDT
TABLE CLSVSCRC
KEY NOT FOUND
DEFAULT IS TO LEAVE XLA RESULT UNCHANGED

+++ TRAVER:  SUCESSFUL CALL TRACE +++

DIGIT TRANSLATION ROUTES
1 LINE         6136211239 ST
TREATMENT ROUTES.  TREATMENT  IS:   GNCT
1 T120
+++  TRAVER:  SUCESSFUL CALL TRACE +++
```

Failed call

The following TRAVER describes a call with ANI not entered in Table CGNSCRN. The call does not complete. The system routes the call to ANI database failure treatment.

TRAVER 17 - Failed Call

```
>TRAVER TR MFFGDVAPN 55211239
Please enter ANI digits:
>6126211111
Table TRKGRP
MFFGDVAPN IBNTI O NPDGP NCRT COMKODAK 0 0 N ANSDISC 0 Y N N N N Y
  Y 0 0 N N N N Y FGD Y Y $ $
Table CGNSCRN
TUPLE NOT FOUND
TABLE TMTCNTL
TITRKGRP (107)
 . SUBTABLE TREAT
 . ADBF  N  S  ADBFANN


++++  TRAVER:   SUCESSFUL CALL TRACE ++++


TREATMENT ROUTES.  TREATMENT IS:  ADBF
1 ADBFANN



+++++  TRAVER:  SUCESSFUL CALL TRACE ++++
```

Virtual Access to Private Networks (end)

SERVORD

The Virtual Access to Private Networks feature does not use SERVORD.

2 Datafilling MDC MBS Minimum

The following chapter describes the MDC MBS Minimum, MDC00007, functionality.

Automatic Line and MADN

Ordering codes

Functional group ordering code: MDC00007

Functionality ordering code: does not apply

Release applicability

BCS20 and later versions

Requirements

To operate, Automatic Line and MADN has the following requirements:

- BAS Generic, BAS00003
- MDC Minimum, MDC00001

Description

Automatic Line and MADN allows the assignment of the automatic line (AUL) option to a multiple appearance directory number (MADN) line. Before the development of this feature, MADN lines and the AUL option were not compatible.

Automatic lines allow the end user to originate a call. The end user can originate a call in two methods. In the first method, the end user goes off hook. In the second method, the end user presses directory number (DN) keys to route the call automatically to a predetermined destination.

Multiple appearance directory numbers allow the assignment of a directory number to more than one line. There are two types of MADN lines. These types of lines are single call arrangement (SCA) and multiple call arrangement (MCA). A MADN line with SCA can have only one member active at a time. A MADN line with MCA can have all members with active calls on the same DN at the same time.

Operation

When an incoming call to a MADN-AUL line is present, all members of the MADN-AUL party ring. The first member of the party to go off-hook connects to the incoming call.

To initiate a call, a MADN-AUL member must go off-hook or press a DN key. The system connects the call to the predetermined DN when a MADN-AUL member presses a DN key. In this condition, the MADN-AUL member receives one of two answers. The answer the member receives depends on the state of the DN where the system routes the call. The first type of answer is

audible ringback. The second type of answer is a busy tone with a dial tone not present.

When an end user goes off-hook from a MADN-AUL line, one of the following actions occurs:

- If an incoming call is present, the system connects the end user to the originator of the call.
- A held call is present and the end user is a MADN-SCA member. When these conditions occur, the end user picks up the held call.
- If privacy release is active, the end user becomes a part of the conference call.
- If the end user is a MADN-SCA member and the group is busy, an action does not occur. A dial does not occur.
- If the preceding conditions do not occur, the system routes the call to the predetermined destination.

Translations table flow

Automatic Line and MADN does not affect translations table flow.

Limits

The following limits apply to Automatic Line and MADN:

- Automatic line numbers can be a maximum of 15 digits long. The only digits that the user can assign to an automatic line are 0 to 9. The asterisk (*) and the octothorpe (#) are not correct digits.
- The MADN-AUL lines are not compatible with features that require initial dial tone. Examples of these features are speed calling and last number redial (LNR).
- The user can assign call forward universal (CFU) and call forward intragroup (CFI) only if the automatic line is an Meridian Digital VCentrext (MDC) line.
- A MADN-AUL line cannot unpark a call that is in a call park configuration.
- A MADN-AUL line cannot pick up a call with the call pickup feature or the directed call pickup feature.
- The MADN-AUL lines are not compatible with the dial call waiting (CWD) feature.
- A MADN-AUL line used on a 500/2500 set can access the make set busy (MSB) feature only when a user sets the feature to an MSB key.

Automatic Line and MADN (continued)

- The MADN-AUL lines cannot retrieve or delete calls that are in a message waiting queue.
- The end user of a 500/2500 set with MADN-AUL can activate and recall the ring again (RAG) feature. The end user of a 500/2500 set with MADN-AUL can activate and recall the call back queuing (CBQ) feature. The end user of a 500/2500 set with MADN-AUL cannot deactivate either of these features. The end user of a keyset station can activate either RAG or CBQ. The end user of a keyset station must answer the recall with a different DN key.

Interactions

A description of the interactions between Automatic Line and MADN and other functionalities appears in the following paragraphs.

Automatic lines

The assignment of automatic lines can occur to as many members of a MADN group as desired. Limits are not present where the system can route an automatic line call. For example, every MADN SCA or MADN MCA member can route calls to different DNs. In the same method, the system can route all members of the MADN group to the same DN.

MADN hold and Privacy release

The MADN-AUL lines can use MADN hold and privacy release together.

Compatible features and options

The following features and options are compatible with the AUL feature and the introduction of the Automatic Line and MADN feature:

- AUTH/ACCT
- CFU
- CHD
- CPK
- CPU/DCPU
- CWT/CWO/CWI
- Station controlled conference calls
- CXR
- 3WC
- EBO
- MADN

- CLF
- MCH
- Message waiting/Call request
- Permanent hold
- Preset conference
- RAG/CBQ
- OHQ
- ERWT
- Thru dialing

Activation/deactivation by the end user

Automatic Line and MADN does not require activation or deactivation by the end user.

Billing

Automatic Line and MADN does not affect billing.

Station Message Detail Recording

Automatic Line and MADN does not affect Station Message Detail Recording.

Datafilling office parameters

Automatic Line and MADN does not affect office parameters.

Datafill sequence

The tables that require datafill to implement Automatic Line and MADN appear in the following table. The tables appear in the correct entry order.

Note: Enter data in these tables through SERVORD. A datafill procedure or example is not available. See “SERVORD" for an example of using SERVORD to enter these tables.

Datafill requirements for Automatic Line and MADN

Table	Purpose of table
IBNLINES (Note)	IBN Line Assignments. This table contains the line assignments for data channel links for the Bulk Calling Line Identification (BCLI) feature. These assignments are under the format name of BL.
IBNFEAT (Note)	IBN Line Feature. This table contains the line features assigned to the IBN lines in table IBNLINES.

Automatic Line and MADN (continued)

Tools for verifying translations

Automatic Line and MADN does not use tools for verifying translations.

SERVORD

You can use the Service Order System (SERVORD) to add options MDN and AUL to a present line. This addition occurs through the use of the ADO (add option) command.

SERVORD limits

Automatic Line and MADN does not have SERVORD limits.

SERVORD prompts

The SERVORD prompts used to assign Automatic Line and MADN to a line appear in the following table.

SERVORD prompts for Automatic Line and MADN

Prompt	Valid input	Explanation
DN_OR_LEN	7-digit DN or LEN	Specifies the seven digit DN or LEN assigned to the line. Enter the DN or LEN.
OPTION	MDN, AUL	Specifies the options assigned to the line. Enter MDN and AUL.
AULDN	15 digits maximum	Specifies the Automatic Line DN, the local or toll DN to which the user must connect the AUL.

Note: When you assign Automatic Line and MADN using SERVORD, the system enters data in tables IBNLINES and IBNFEA.

SERVORD example for implementing Automatic Line and MADN

The addition of Automatic Line and MADN to a line using the ADO command appears in the following SERVORD example.

Automatic Line and MADN (end)

SERVORD example for Automatic Line and MADN in prompt mode

```
SO:
> ADO
SONUMBER:  NOW 93 2 1 AM
>
DN_OR_LEN:
> 2 0 3 1
OPTION:
> MDN
MDNTYPE:
> EXB
PRIMARY:
> Y
RING:
> Y
DIR_NUMBER:
> 6214444
OPTION:
> AUL
AULDN:
> 7875127
OPTION:
> $
```

SERVORD example for Automatic Line and MADN in no-prompt mode

```
>ADO  2 0 3 1  MDN  EXB  LKY  Y  6214444  AUL  7875127  $
```

Business Set Busy Indicator

Ordering codes

Functional group ordering code: MDC00007

Functionality ordering code: does not apply

Release applicability

BCS22 and later versions

Requirements

To operate, Business Set Busy Indicator has the following requirements:

- BAS Generic, BAS00003
- MDC Minimum, MDC00001

Description

The Business Set Busy Indicator allows a group of business set end users to monitor the busy/idle status of a specified set. The Business Set Busy Indicator alerts the end users when the set becomes idle.

The Business Set Busy Indicator contains a dedicated query busy station (QBS) key and an associated lamp. An end user with this feature can monitor the status of the station of another end user. The other end user has a business set or an Meridian Digital Centrex (MDC) 500/2500 set. One business set can have multiple monitor keys for monitoring different sets. The operation of these keys can occur at the same time.

Operation

The normal operational sequence is as follows:

- The end user can determine the status of a directory number (DN) or line of another end user. To perform this operation, the end user presses the feature key assigned to QBS on the set of the end user. This action places the monitoring set in the monitor station mode.
- If the monitored station becomes idle, the lamp flashes at 60 impulses per minute (ipm). The system provides an optional 1 s tone. After a 5 s time-out period, the system extinguishes the lamp and the station exits the monitor mode.
- The monitored station can become busy. In this event, the system turns on the lamp until the station becomes idle or the end user cancels the request.

- When the monitored station becomes idle, the lamp flashes. The system provides an optional 1 s tone. After a 5 s time-out, the system extinguishes the lamp and the set exits the monitor station mode.
- To cancel the QBS request, the end user presses the QBS key while the lamp is lit.

Translations table flow

The Business Set Busy Indicator translations process appears in the flowchart in the following figure. The QBS feature addition to the business set through the Service Order System (SERVORD) appears in the flowchart and data.

Table KSETFEAT (Business Set and Data Unit Feature) contains the line features assigned to business sets and data units. The assignment of the QBS feature occurs to a specified key in field FEATKEY, subfield KEY. Field KVAR, subfield MONDLEN specifies the LEN of the monitored telephone, 500/2500 or MBS, and an alerting tone, subfield BUZZ. The system enables or disables this alerting tone after a queried station changes state from busy to idle. Assignment of the QBS feature and datafill for this table occurs through SERVORD.

Table KSETLINE (Business Set and Data Unit Line Assignment) defines the business set and data unit numbers that the switch supports. This table also defines the hardware options assigned to each business set. For this feature, Table KSETLINE identifies the business that has the QBS feature assigned in Table KSETFEAT. Entry of data in this table occurs through SERVORD when assignment of the business set occurs.

Business Set Busy Indicator (continued)

Table flow for Business Set Busy Indicator

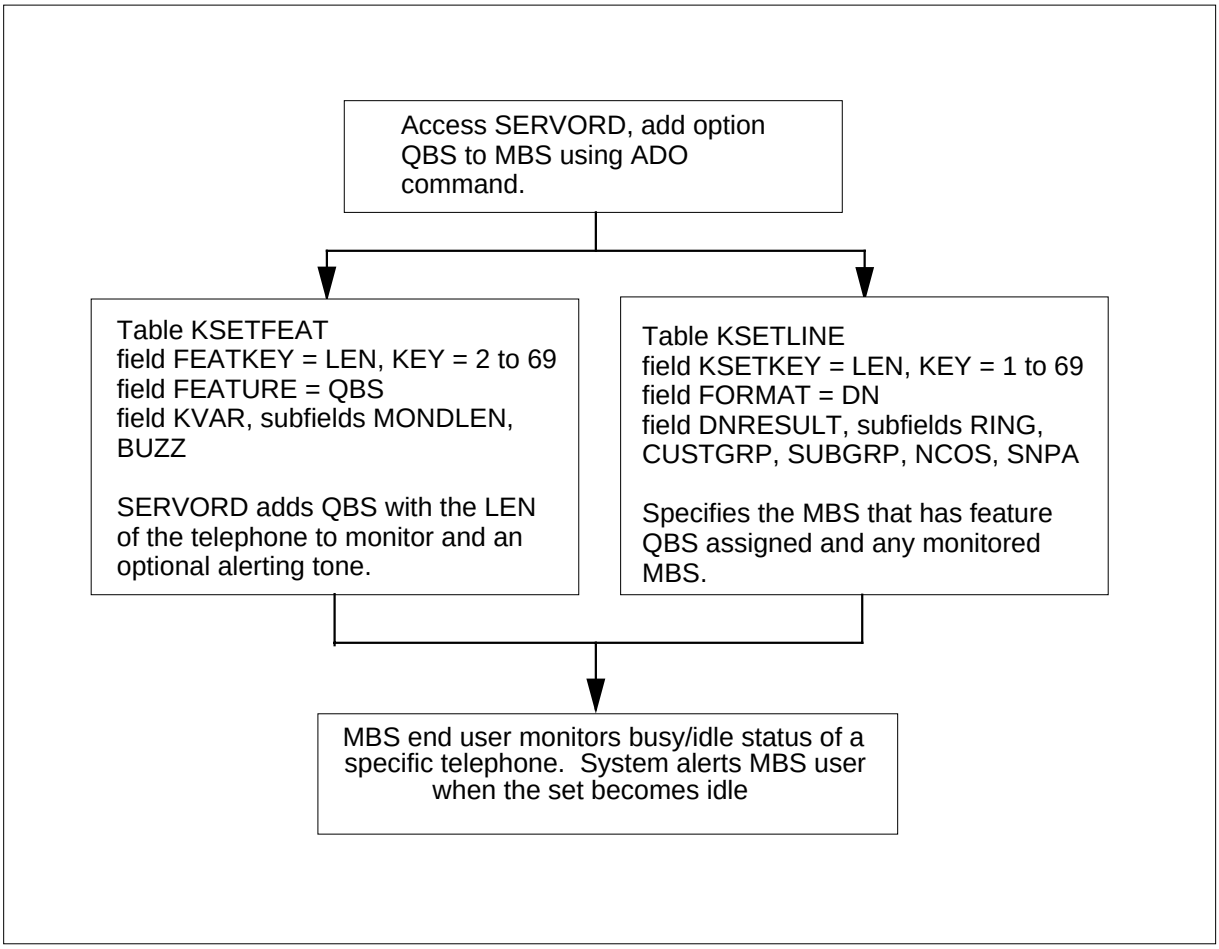

The datafill content for the flowchart appears in the following example.

Datafill example for Business Set Busy Indicator

Item	Example data
LEN and key for QBS	HOST 02 0 00 13 5
Monitored MBS LEN	HOST 02 0 00 13
Monitored DN	919 5551234

Business Set Busy Indicator (continued)

Datafill example for Business Set Busy Indicator

Datafill table	Example data
KSETFEAT	HOST 02 0 00 13 5 QBS QBS 02 0 00 13 Y $
KSETLINE	HOST 02 0 00 13 5 DN Y 5551234 MDCGRP1 0 0 919 $

Activation/deactivation by the end user

The following procedure is for the activation/deactivation of Business Set Busy Indicator by the end user.

Activation/deactivation of Business Set Busy Indicator by the end user

At your telephone

1 To determine the status of any DN or line of another end user, press the business set feature key assigned to QBS.

Response:

This action places the monitoring set in the monitor station mode.

If the monitored station becomes idle, the lamp flashes at 60 ipm. The system provides an optional 1-s tone. After a 5-s time-out period, the system extinguishes the lamp and the station exits the monitor mode.

The monitored station can become busy. In this event, the system turns on the lamp until that station becomes idle or the end user cancels the request.

When the monitored station becomes idle, the lamp flashes. The system provides an optional 1-s tone. After a 5-s time-out, the system extinguishes the lamp and the set exits the monitor station mode.

2 To cancel the QBS request, press the QBS key while the lamp is lit.

Response:

The system cancels the QBS request and extinguishes the lamp.

Limits

The following limits apply to Business Set Busy Indicator:

- A maximum of 128 members in a QBS group can monitor one station.
- A maximum of eight simultaneous queries can occur in a group.
- The number of different QBS keys on a set does not have a limit.
- A monitor set can have keys that belong to the same number of monitor groups as the number of set keys allows.
- The number of QBS groups for each DMS-100 switch does not have a limit.
- The monitored and monitoring stations must be in the same customer group family.

Business Set Busy Indicator (continued)

- A customer data change (CDC) end user can add and delete option QBS to and from the end user CDC LENs.
- The end user can press the QBS key at any time except during digit collection for dialing or programming. If end user presses the QBS key during digit collection, the system ignores the key.

A QBS indication of busy does not mean that terminations cannot occur on the monitored station. A QBS indication of idle does not mean that terminations can occur on the monitored station.

Feature interactions

The following table lists the features that interact with the QBS feature during the monitor mode.

Note: The system does not light the lamp when the set is not in the monitor mode.

QBS feature interaction with other features during the monitor mode (Sheet 1 of 2)

Monitored set activity	QBS indication	QBS lamp state
No activity	Idle	Flash
Programming speed call list (MBS only)	Idle	Flash
Programming call forward (MBS only)	Idle	Flash
Programming autodial key	Idle	Flash
Call forwarding activated	Idle	Flash
Query time and date activated	Idle	Flash
Message waiting activated	Idle	Flash
Call request activated	Idle	Flash
Waiting for RAG recall	Busy	On
Has parked a call (call park)	Busy	On
Make set busy activated	Busy	On
Do not disturb activated	Busy	On
Has call on hold (call hold, MADN, permanent or local hold)	Busy	On

Business Set Busy Indicator (continued)

QBS feature interaction with other features during the monitor mode (Sheet 2 of 2)

Monitored set activity	QBS indication	QBS lamp state
Active on automatic line key	Busy	On
Active on a DN	Busy	On
Active on a GIC	Busy	On
Active on an ICM	Busy	On
Active on call waiting key	Busy	On
Set receiving ringing because of termination or recall	Busy	On
Out of service (MANB, LMB, SUS, RSUS, PLP)	Error	Wink
Has denied termination	Error	Wink

The QBS feature interacts with the MADN feature. An explanation of these interactions follows.

The correct QBS indication at different stages of the call appears in the following table. Assume that the set up for a MADN group M with two members has one member on the monitored set A and another member on set B.

Proper QBS indication with various stages of a MADN call

Call state	QBS indication	QBS lamp state
Group M ringing	Busy	On
Member A active on a call	Busy	On
Member B active on a call	Idle	Flash
Member A activates MADN hold or privacy RLS	Busy	On
Member B activates MADN hold or privacy RLS	Idle	Flash

If the call state changes and the QBS indication changes from busy to idle, the system notifies the monitors. For example, if a call occurs to M, a monitor X activates QBS on A. The QBS lamp for X goes on solid. If B answers the call,

Business Set Busy Indicator (continued)

the system notifies X that A is idle. If A answers, the QBS lamp for X stays on until A became idle.

Billing

Business Set Busy Indicator does not affect billing.

Station Message Detail Recording

Business Set Busy Indicator does not affect Station Message Detail Recording.

Datafilling office parameters

Business Set Busy Indicator does not affect office parameters.

Datafilling table Business Set Busy Indicator

The datafill for Business Set Busy Indicator for tables KSETLINE and KSETFEAT appears in the following table. The fields that apply to Business Set Busy Indicator appear in the table. See the data schema section of this document for a description of the other fields.

> ***Note:*** Entry of data for these tables occurs through SERVORD. This document does not provide a datafill example because data entry occurs this way. See SERVORD for an example of the use of SERVORD to enter data in these tables.

Datafill requirements for Business Set Busy Indicator

Table	Purpose of table
KSETLINE	Business Set and Data-Unit Line Assignment. This table contains the directory number appearances for business sets and data units. Each directory number related key on a business set and a data unit requires one entry.
KSETFEAT	Business Set and Data-Unit Feature. This table lists the line features assigned to the business sets and data units (DU) in table KSETLINE. This table also lists the Meridian digital telephone sets and DUs in table IVDINV.

Tools for verifying translations

Business Set Busy Indicator does not use tools for verifying translations.

SERVORD

To assign the QBS option, use the SERVORD command ADO (add option). To remove the QBS option, use the DEO (delete option) command. Option QBS allows the monitoring of the busy and idle status of a specified set to

Business Set Busy Indicator (continued)

occur. This option also allows the system to alert the querying set when a set becomes idle if busy when queried.

Note: The system enters data in table KSETFEAT and table KSETLINE when the assignment of Business Set Busy Indicator occurs with SERVORD.

SERVORD limits

Business Set Busy Indicator does not have SERVORD limits.

SERVORD prompts

The SERVORD prompts to assign Business Set Busy Indicator to a current line appear in the following table.

SERVORD prompts for Business Set Busy Indicator

Prompt	Valid input	Explanation
DN_OR_LEN	seven digit DN or LEN	Specifies the seven digit DN or LEN of the line to change. Enter the DN or LEN.
OPTKEY	1 to 69	Indicates the key on an MBS that has an option assigned. Enter a value from 1 to 69.
OPTION	QBS	Indicates the name of the option. Enter QBS.
MONDLEN	Line equipment number	Indicates the name of the option. Enter QBS.
MONDLEN	Line equipment number	Indicates the monitored LEN. Enter the LEN.
BUZZ	Y, N	Specifies if activation of the buzz must occur. Enter Y or N.

SERVORD example for adding Business Set Busy Indicator

Assignment of option QBS to key 5 of an MBS with LEN 0 0 1 5 to monitor another set with LEN 0 1 0 5 appears in the following SERVORD example.

Business Set Busy Indicator (end)

SERVORD example for Business Set Busy Indicator in prompt mode

```
SO:
> ADO
SONUMBER: NOW 92 10 01 PM
>
DN_OR_LEN:
> 0 0 1 5
OPTKEY:
>5
OPTION:
> QBS
MONDLEN:
> 0 1 0 5
BUZZ:
> Y
OPTKEY:
> $
```

SERVORD example for Business Set Busy Indicator in no-prompt mode

```
>ADO $ 0 0 1 5 QBS 0 1 0 5 Y $
```

Business Set Call Waiting Originate

Ordering codes

Functional group ordering code: MDC00007

Functionality ordering code: does not apply

Release applicability

BCS27 and later versions

Requirements

To operate, the Business Set Call Waiting Originate feature has the following requirements:

- BAS Generic, BAS00003
- MDC Minimum, MDC00001

Description

The Business Set Call Waiting Originate feature allows you to assign the Call Waiting Originating (CWO) feature to a directory number (DN) on a Meridian business set (MBS). The assignment of CWO only occurred to 500/2500 type sets.

The Business Set Call Waiting Originate feature allows the end user making an intragroup call to impose call waiting on a busy station. The busy station does not have call waiting assigned. The Business Set Call Waiting Originate feature allows MBS end users to impose call waiting on the following types of sets:

- 500/2500 type sets that do not have the Call Waiting Intragroup (CWI) feature assigned
- MBSs that do not have CWI assigned but do have the Call Waiting feature assigned
- MBSs with a call waiting (CWT) key assigned, and the CWI feature assigned to the busy DN

Operation

The Business Set Call Waiting Originate feature imposes call waiting on intragroup calls from specified MBSs. To access the waiting call, the called party presses the CWT key. The end user with the Business Set Call Waiting Originate feature can call a busy station that already has another call waiting. When this condition occurs, the end user hears busy tone.

Business Set Call Waiting Originate (continued)

Translations table flow

Descriptions of the Business Set Call Waiting Originate translations table appear in the following paragraph.

Table KSETLINE (Business Set and Data Unit Line Assignment) defines business set and data unit numbers. The DMS-100 switch and assigned hardware options support these numbers. The system enters data in this table when the assignment of a line occurs in SERVORD.

> ***Note:*** The Business Set Call Waiting Originate feature requires that you enter data in table KSETLINE through SERVORD.

The Business Set Call Waiting Originate translation process appears in the following flowchart. The addition of Business Set Call Waiting Originate to a line through SERVORD appears in the following flowchart. The table that this feature affects also appears in the flowchart.

Table flow for Business Set Call Waiting Originate

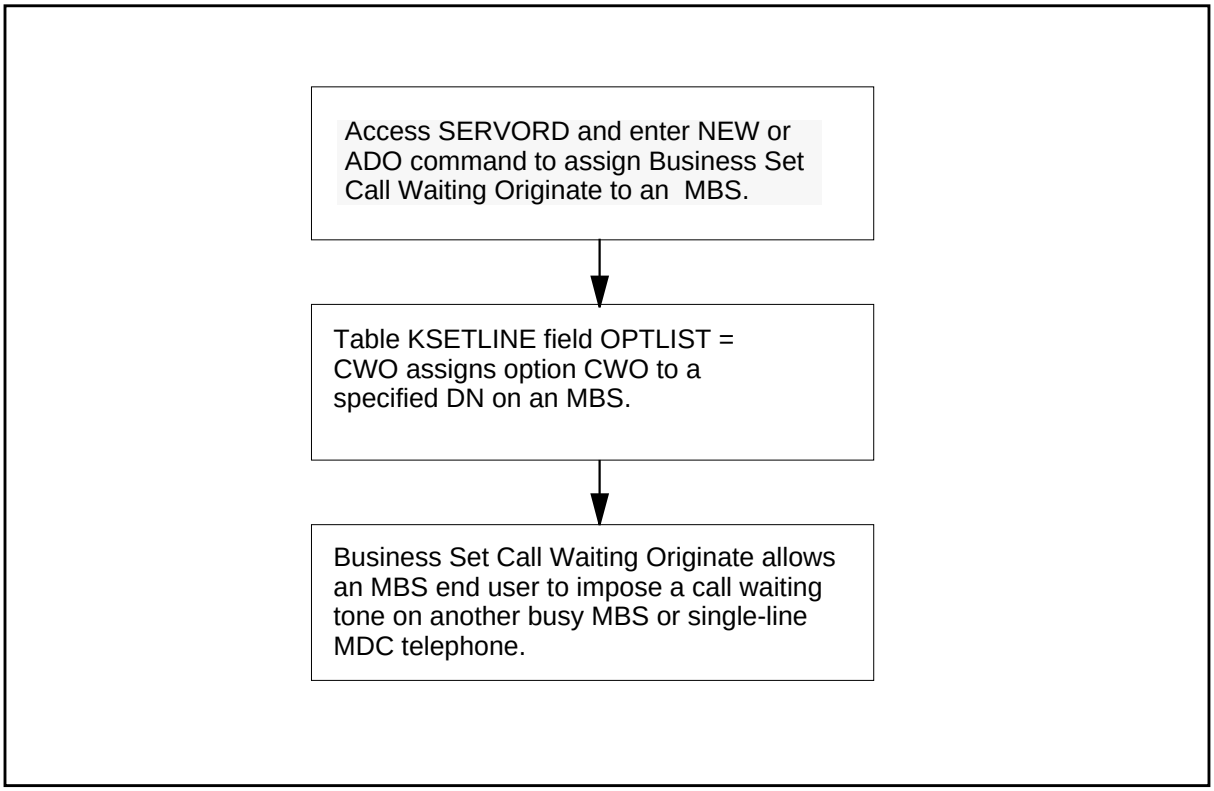

The LEN of end users is 02000008. The option added to the telephone is CWO.

Business Set Call Waiting Originate (continued)

The datafill content of the flowchart appears in the following table.

Datafill example for Business Set Call Waiting Originate

Datafill table	Example data
KSETLINE	HOST 02 00 00 08 2 DN Y 5551234 MDCGRP1 0 5 919 CWO $

Limits

The following limits apply to the Business Set Call Waiting Originate feature:

- The Business Set Call Waiting Originate feature imposes call waiting on the busy station. The end user does not have the option to not impose call waiting on the busy party.
- The Business Set Call Waiting Originate feature only activates when the called party has a 500/2500 set or an MBS with a CWT key assigned.
- The Business Set Call Waiting Originate feature only applies to intragroup calls. Intragroup calls are calls in the same customer group. The system activates the Business Set Call Waiting Originate feature when the system encounters a busy station during an intragroup call.
- You can enter option CWO in table CUSTSTN (Customer Group Station Option). In this occurrence, the system connects the end user with the Business Set Call Waiting Originate feature to an audio treatment from Table AUDIO (Audio Interlude). This action allows the end user to hear an audio treatment, like music. The end user hears an audio treatment while the end user waits for the busy station to answer the call. The end user does not hear ringing. The system only applies audio treatment to the end user when the busy station is a 500/2500 set. If the busy station is an MBS, the system does not connect the end user to audio treatment. The end user hears ordinary ringing.
- Option DOR and option CWO are not compatible options. The assignment of these options to the same line cannot occur.
- Option CWD and option CWO are not compatible options. The assignment of these options cannot occur to the same line.

Business Set Call Waiting Originate (continued)

Interactions

Descriptions of the interactions between the Business Set Call Waiting Originate feature and other functionalities appear in the following paragraphs:

- Call Waiting

  The end user with the Business Set Call Waiting Originate feature can call a busy station that has call waiting. In this occurrence, the end user hears busy tone. The system does not queue the calls.

- Call Waiting Exempt

  The Business Set Call Waiting Originate feature cannot activate if the terminating station has the Call Waiting Exempt (CWX) feature assigned.

- Distinctive Call Waiting Ringback

  The called station can have the Distinctive Call Waiting Ringback (CWR) feature. The call originator can determine if the terminating station is busy or idle and the call does not complete. The call originator determines these states by the ringing tone. If the called station is busy, the caller hears distinctive ringback. If the station is idle, the caller hears ordinary ringing.

Activation/deactivation by the end user

The Business Set Call Waiting Originate feature does not require activation or deactivation by the end user.

Billing

The Business Set Call Waiting Originate feature does not affect billing.

Station Message Detail Recording

The Business Set Call Waiting Originate feature does not affect Station Message Detail Recording.

Datafilling office parameters

The Business Set Call Waiting Originate feature does not affect office parameters.

Datafill sequence

The tables that require datafill to implement the Business Set Call Waiting Originate feature appear in the following table. The tables appear in the correct entry order.

Note: Use SERVORD to enter data in the following table. A datafill procedure or example is not available. See “SERVORD" for an example of how to use SERVORD to enter data in this table.

Datafill requirements for Business Set Call Waiting Originate

Table	Purpose of table
KSETLINE	Business set and data-unit line assignment. This table contains the directory number appearances for business sets and data units.

Tools for verifying translations

The Business Set Call Waiting Originate feature does not use tools for verifying translations.

The Business Set Call Waiting Originate feature does not affect translation verification (TRAVER) tools.

SERVORD

The Business Set Call Waiting Originate feature allows the assignment of option CWO through the Service Order System (SERVORD). Option CWO allows an originating line to impose a call waiting tone on a busy called line. The assignment of option CWO to DN keys on an MBS can occur.

Use the ADO (add option) command to add option CWO to a line. Use the DEO (delete option) command to delete an option from a line. Use the NEW (establish service) command to assign option CWO to a new line.

Note: The system enters data in table KSETLINE when the assignment of Business Set Call Waiting Originate occurs through SERVORD.

SERVORD limits

The Business Set Call Waiting Originate feature does not have SERVORD limits.

Business Set Call Waiting Originate (continued)

SERVORD prompts

The SERVORD prompts used to assign the Business Set Call Waiting Originate feature to an MBS appear in the following table.

SERVORD prompts for Business Set Call Waiting Originate (Sheet 1 of 2)

Prompt	Valid input	Explanation
DN_OR_LEN	7-digit DN_OR_LEN	Specifies the 7-digit DN or LEN of the line to change. Enter the DN or LEN.
GROUP	A maximum of 8 alphanumeric characters, beginning with an alphabetic character	Specifies the 7-digit DN or LEN of the line to change. Enter the DN or LEN.
KEY	1 to 1023	Indicates the line hunt overflow route index that identifies the overflow route. Enter a value from 1 to 1023.
LCC	M2009, M2018, M2112, M2317, M3000, M5009, M5112, M5209, M5312	Indicates the line class code of the service to establish or delete. Enter M2009, M2018, M2112, M2317, M3000, M5009, M5112, M5209, or M5312.
LTG	0 to 511	Indicates the line treatment group number. Enter a value from 0 to 511.
NCOS	0 to 511	Indicates the network class of service assigned to MDC trunks. Enter a value from 0 to 511.
OPTION	CWO	Indicates the name of the option. Enter CWO.
OPTKEY	1 to 69	Indicates the key on an MBS to which the assignment of an option occurs. Enter a value from 1 to 69.
RINGING	Y, N	Specifies if the key on an MBS has ringing ability. Enter Y or N.

Business Set Call Waiting Originate (continued)

SERVORD prompts for Business Set Call Waiting Originate (Sheet 2 of 2)

Prompt	Valid input	Explanation
SNPA	3-digit SNPA	Indicates the serving numbering plan area. Enter the 3-digit SNPA.
SUBGRP	0 to 7	Indicates the subgroup number of the customer group to which the station or DN belongs. Enter a value from 0 to 7.

SERVORD example for implementing Business Set Call Waiting Originate

The addition of the Business Set Call Waiting Originate feature to key 2 of an MBS occurs through the ADO command. A description of this process appears in the following SERVORD example.

SERVORD example 1 for Business Set Call Waiting Originate in prompt mode

```
>
SO:
>ADO
SONUMBER:   NOW 88 12  8 PM
>
DN_OR_LEN:
> 2 0 0 8
OPTKEY:
> 2
OPTION:
> CWO
OPTKEY:
> $
```

SERVORD example 1 for Business Set Call Waiting Originate in no-prompt mode

```
> ADO $ 2 0 0 8  2  CWO  $
```

A description of the establishment of service for a new DN appears in the following SERVORD example. A description of the assignment of key 1 of an MBS which occurs through the NEW command also appears in the following SERVORD example.

Business Set Call Waiting Originate (end)

SERVORD example 2 for Business Set Call Waiting Originate in prompt mode

```
>
SO:
>NEW
DN:
> 5551234
LCC:
>M5312
GROUP:
>MDCGRP1
SUBGRP:
> 0
NCOS:
> 0
SNPA:
> 919
KEY:
> 1
RINGING:
>Y
LTG:
> 0
LEN:
> 2 1 3 4
OPTKEY:
> 1
OPTION:
> CWO
OPTKEY:
> $
```

SERVORD example 2 for Business Set Call Waiting Originate in no-prompt mode

```
>NEW  5551234   M5312   MDCGRP1   0  0  919  1  Y  0  2 1 3 4  1 CWO  $
```

Business Set Dial Call Waiting

Ordering codes

Functional group ordering code: MDC00007

Functionality ordering code: does not apply

Release applicability

BCS27 and later versions

Requirements

To operate, Business Set Dial Call Waiting has the following requirements:

- BAS Generic, BAS00003
- MDC Minimum, MDC00001

Description

Business Set Dial Call Waiting allows the operating company to assign dial call waiting (CWD) and call waiting exempt (CWX) to directory numbers (DN) on a business set. Before this feature, CWD and CWX were only available to 500/2500 type sets.

Operation

Dial call waiting allows a business set end user to impose call waiting on a busy station. The busy station can be a 500/2500 set or a business set with a call waiting (CWT) feature key.

To activate dial call waiting, the caller must perform the following steps after reaching a busy station:

- hang up or press the release key
- go off-hook and dial the feature access code for dial call waiting
- wait for special dial tone
- dial the extension number of the busy station.

At this point in the process, the caller hears ringing, distinctive call waiting ringback, or audio. The datafill determines which selection the caller hears. The system uses a tone burst to inform the busy party of the waiting call. The system repeats this tone burst each 10 s.

When an end user activates dial call waiting against a busy station, the end user hears normal ringback. Normal ringback is the default. The end user can request an audio treatment while waiting for an answer to the call. An example of this type of treatment is music or an announcement. In this event, the

Business Set Dial Call Waiting (continued)

operating company can enter data in table AUDIO (Audio Interlude) and Table CUSTSTN (Customer Group Station Option). This action provides an audio treatment for dial call waiting. The end user can connect to the audio treatment only when the busy station is a 500/2500 set. If the busy station is a business set, the end user hears normal ringback.

Call waiting exempt

Call waiting exempt (CWX) does not allow dial call waiting and call waiting originating (CWO) to interrupt a business set end user. The end user does not dial a code to activate call waiting exempt. The system activates this feature. For example, consider the following:

- Party 1 calls party 2.
- Party 2 is busy. Party 1 hangs up and activates dial call waiting against party 2.
- Party 2 has the call waiting exempt feature. The tone burst does not interrupt the party. Party 1 receives busy tone.

Translations table flow

The following list explains the Business Set Dial Call Waiting translations tables:

- table KSETLINE (Business Set and Data Unit Line Assignment) defines the hardware location of the business sets and data units. This table defines information about each DN appearance on the sets. Entry of data in this table occurs when assignment of the Meridian business set (MBS) or data unit occurs in SERVORD.
- table IBNXLA (IBN Translation) stores the digits of the MDC access codes and the options or features to which the codes belong. The access code for dial call waiting is in table IBNXLA for this feature.
- table CUSTSTN (Customer Group Station Option) contains the station options assigned to each customer group. Option CWD in Table CUSTSTN specifies an optional audio treatment for 500/2500 telephones.
- table AUDIO (Audio Interlude) defines the audio interlude broadcasts for a specified audio group and MDC feature. The broadcast can contain announcements, music, silences, ringing, or repeats. This table contains the common language location identifier (CLLI) names of the announcement or music trunks for a feature. These CLLI names must appear in tables ANNS (Announcements) and ANNMEMS (Announcement Members).

The Business Set Dial Call Waiting translation process appears in the flowchart that follows. The assignment of the CWD and CWX features and

Business Set Dial Call Waiting (continued)

optional audio broadcast capabilities for the 500/2500 single-line telephone can occur. An example of the assignment appears in the following flowchart and data.

Business Set Dial Call Waiting (continued)

Table flow for Business Set Dial Call Waiting

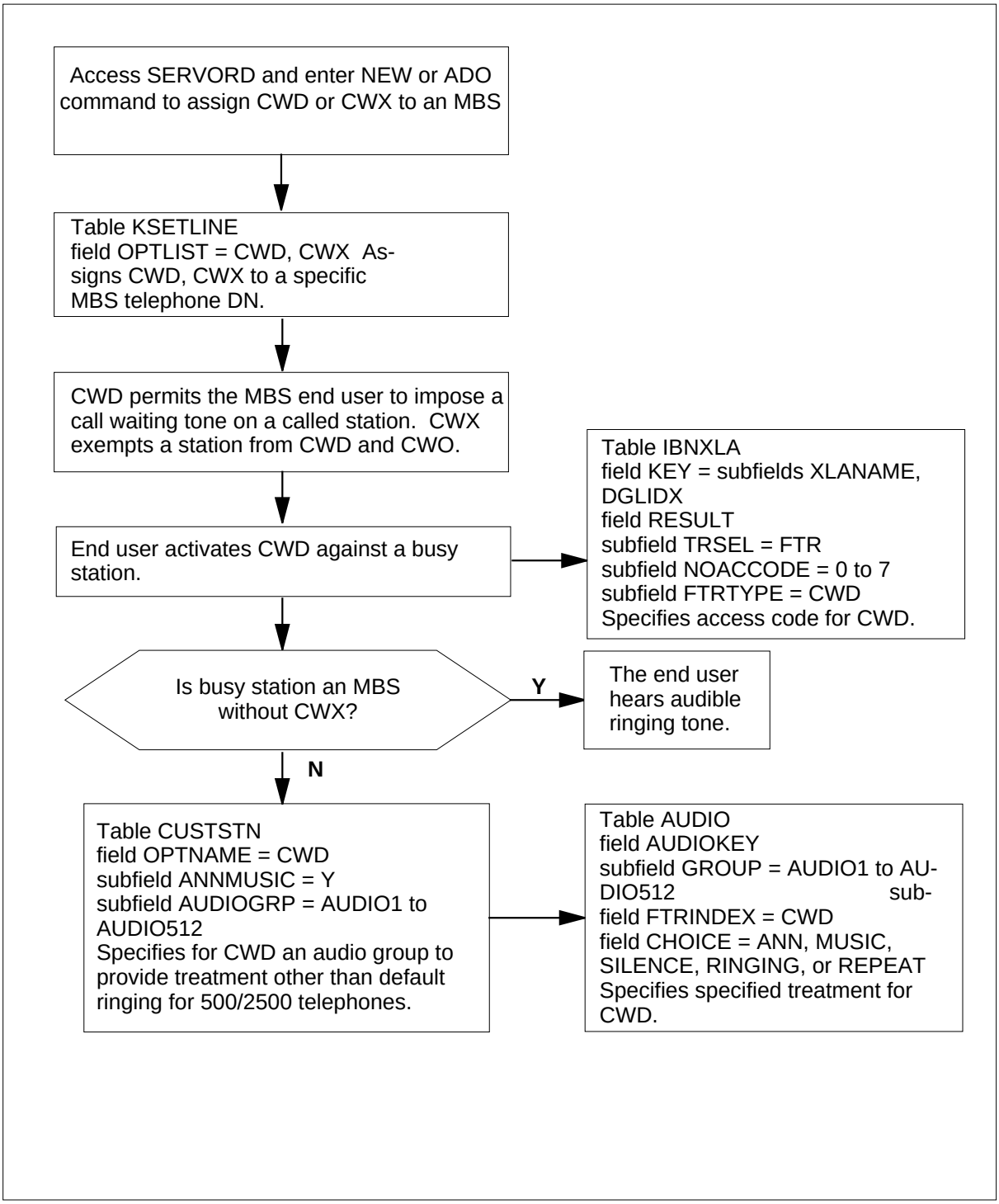

Business Set Dial Call Waiting (continued)

The LEN of end users with the CWD feature is 0000125. The LEN of end users with the CWX feature is 0000126. The activation code for CWD is 58.

The datafill content used in the flowchart appears in the following example.

Datafill example for Business Set Dial Call Waiting

Datafill table	Example data
KSETLINE	HOST 00 0 O1 25 2 DN Y 5552000 MDCGRP1 0 0 919 (CWD)$ HOST 00 0 O1 26 2 DN Y 5552001 MDCGRP1 0 0 919 (CWX)$
IBNXLA	CXLA 58 FTR 2 CWD
CUSTSTN	MDCGRP1 CWD CWD Y AUDIO1
AUDIO	AUDIO1 CWD SILENCE 10 $

Limits

The following limits apply to Business Set Dial Call Waiting:

- you can only activate dial call waiting on intraoffice intragroup calls. Intraoffice intragroup calls are calls in the same switch and customer group.
- an end user with dial call waiting cannot impose call waiting on a business set. This type of business set does not have a call waiting key assigned.
- when the busy station is a business set, the system cannot apply audio treatments. This condition does not change when table CUSTSTN and table AUDIO contain data for this purpose. The caller hears normal ringback after activating dial call waiting. If the busy station is a 500/2500 set, the system applies audio treatments according to datafill.
- the operating company cannot assign dial call waiting to a line that has any of the following features:
  - — AUL (automatic line)
  - — DOR (denied originating)
  - — CWO (call waiting originating)

Interactions

The following paragraph describes the action between Business Set Dial Call Waiting and Distinctive Call Waiting Ringback.

Business Set Dial Call Waiting (continued)

Distinctive Call Waiting Ringback

The called station can have the Distinctive Call Waiting Ringback feature (AF1271). The caller that activates dial call waiting can determine the status of the called station with this feature. The caller determines if the called station is busy or idle and not answered by the called party. If the called station is busy, the caller hears distinctive ringback. If the station is idle, the caller hears standard ringback. Distinctive call waiting ringback has the following pattern:

- 1200 ms of audible ringing tone
- 400 ms of silence
- 400 ms of audible ringing tone

Activation/deactivation by the end user

Dial call waiting

To activate dial call waiting, the caller must perform the following steps after reaching a busy station.

Activation/deactivation of Business Set Dial Call Waiting by the end user

At your telephone:

1 Hang up or press the release key.

Response: End user hears dial tone.

2 Go off-hook and dial the feature access code for dial call waiting.

Response: The system activates the feature access code for dial call waiting.

3 Wait for special dial tone.

Response: Special dial tone indicates dial call waiting is ready for end user to dial the DN.

4 Dial the extension number of the busy station.

Response: The caller hears ringing, distinctive call waiting ringback, or audio. The datafill determines the selection the caller hears. The system uses a tone burst to inform the busy party of the waiting call. The system repeats the tone burst each 10 s.

When an end user activates dial call waiting against a busy station, the end user hears normal ringback. Normal ringback is the default. The end user can request an audio treatment while waiting for the calling party to answer the call. An example of this type of treatment is music or an announcement. You can enter data in table AUDIO and table CUSTSTN to provide an audio treatment for dial call waiting. The end user can connect to the audio treatment when the busy station is a 500/2500 set. If the busy station is a business set, the end user hears normal ringback.

Call waiting exempt

Call waiting exempt (CWX) does not allow dial call waiting and call waiting originating (CWO) to interrupt a business set end user. The end user does not dial a code to activate call waiting exempt. The system automatically activates this feature. For example, consider the following:

- Party 1 calls party 2.
- Party 2 is busy. Party 1 hangs up and activates dial call waiting against party 2.
- Party 2 has the call waiting exempt feature and is not interrupted by tone bursts. Party 1 receives busy tone.

Billing

Business Set Dial Call Waiting does not affect billing.

Station Message Detail Recording

Business Set Dial Call Waiting does not affect Station Message Detail Recording.

Datafilling office parameters

Business Set Dial Call Waiting does not affect office parameters.

Datafill sequence

The tables that require datafill to activate Business Set Dial Call Waiting appear in the following table. The tables appear in the correct entry order.

Datafill requirements for Business Set Dial Call Waiting (Sheet 1 of 2)

Table	Purpose of table
AUDIO	Audio interlude. Enter data in this table to allow end users to hear an audio treatment. The end user can hear this treatment after activating dial call waiting against a busy 500/2500 set.
CUSTSTN	Customer group station option. Enter data in this table to allow end users to hear an audio treatment. The end users can hear this treatment after activating dial call waiting against a busy 500/2500 set.
IBNXLA	IBN translation. Enter an access code in this table for the dial call waiting feature

Business Set Dial Call Waiting (continued)

Datafill requirements for Business Set Dial Call Waiting (Sheet 2 of 2)

Table	Purpose of table
KSETLINE (Note)	Business set and data-unit line assignment. This table contains the directory number appearances for business sets and data units.
Note: Entry of data in this table occurs through SERVORD. This document does not provide a datafill procedure or example for this reason. See “SERVORD" for an example of how to use SERVORD to enter data in this table.	

Datafilling table AUDIO

The operating company can enter data in table AUDIO and table CUSTSTN to allow end users to hear an audio treatment. The end users hear this treatment after activating dial call waiting against a busy 500/2500 set. For example, end users can prefer to hear music or an announcement instead of normal ringing.

To activate an audio treatment, you must perform the following actions:

- define an audio treatment for dial call waiting in table AUDIO
- assign the dial call waiting treatment option (CWD) to the customer group in table CUSTSTN

Table CUSTSTN prompts for the name of the audio group from table AUDIO. The system plays this selection for the dial call waiting feature.

Note: Tables AUDIO and CUSTSTN are optional for this feature.

The datafill for Business Set Dial Call Waiting for table AUDIO appears in the following table. The fields that apply to Business Set Dial Call Waiting appear in the table. See the data schema section of this document for a description of the other fields.

Datafilling table AUDIO (Sheet 1 of 2)

Field	Subfield or refinement	Entry	Explanation and action
AUDIOKEY		see subfields	Audio Key. This field contains subfields GROUP and FTRINDEX.
	GROUP	AUDIO1 to AUDIO512	Audio Group Name. This subfield specifies the audio group name required. Enter an audio group name from AUDIO1 to AUDIO512.

Datafilling table AUDIO (Sheet 2 of 2)

Field	Subfield or refinement	Entry	Explanation and action
	FTRINDEX	CWD	Feature Index. This subfield specifies the feature that requires broadcast or announcement. Enter CWD for dial call waiting.
CHOICE		ANN, MUSIC, SILENCE, RINGING, or REPEAT	Audio Choice. This field specifies the choice of the audio announcement. Enter ANN, MUSIC, SILENCE, RINGING, or REPEAT.

Datafill example for table AUDIO

Sample datafill for table AUDIO appears in the following example.

MAP example for table AUDIO

```
AUDIOKEY                CHOICE
-----------------------------------------------
AUDIO1   CWD            SILENCE 10 $
```

Datafilling table CUSTSTN

The operating company can enter data in table AUDIO and table CUSTSTN to allow end users to hear an audio treatment. The end users hear this treatment after activating dial call waiting against a busy 500/2500 set. For example, end users can prefer to hear music or an announcement instead of normal ringing.

To activate audio treatment, you must perform the following actions:

- define an audio treatment for dial call waiting in table AUDIO
- assign the dial call waiting treatment option (CWD) to the customer group in table CUSTSTN

Table CUSTSTN prompts for the name of the audio group from table AUDIO. The system plays this selection for the dial call waiting feature.

Note: Tables AUDIO and CUSTSTN are optional for this feature.

The datafill for Business Set Dial Call Waiting for table CUSTSTN appears in the following table. The fields that apply to Business Set Dial Call Waiting

Business Set Dial Call Waiting (continued)

appear in the table. See the data schema section of this document for a description of the other fields.

Datafilling table CUSTSTN

Field	Subfield or refinement	Entry	Explanation and action
OPTNAME		CWD	Option Name. This field specifies the name of the dial call waiting option. Enter CWD.
OPTION		see subfields	Option. This field contains subfields OPTION and ANNMUSIC.
	OPTION	CWD	Option. This field specifies the name of the dial call waiting option. Enter CWD.
	ANNMUSIC	Y or N	Announcement/Music. This subfield specifies if the system provides an announcement or music to the waiting party. Enter Y or N.
If ANNMUSIC is Y, subfield AUDIOGRP requires datafill.			
	AUDIOGRP	AUDIO1 to AUDIO512	Audio Group. This subfield specifies the audio group name from table AUDIO with option CWD. The CWD for this table defines the announcement or music to apply. Enter an audio group name from AUDIO1 to AUDIO512.

Datafill example for table CUSTSTN

Sample datafill for table CUSTSTN appears in the following example.

MAP example for table CUSTSTN

```
CUSTNAME            OPTNAME                 OPTION
-----------------------------------------------------
 MDCGRP1              CWD                 CWD Y AUDIO1
```

Datafilling table IBNXLA

Enter an access code in table IBNXLA for the dial call waiting feature. This access code defines the digits that the end user must dial to activate dial call waiting.

Business Set Dial Call Waiting (continued)

The datafill for Business Set Dial Call Waiting for table IBNXLA appears in the following table. The fields that apply to Business Set Dial Call Waiting appear in the following table. See the data schema section of this document for a description of the other fields.

Datafilling table IBNXLA

Field	Subfield or refinement	Entry	Explanation and action
KEY		see subfields	Key. This field contains subfields XLANAME and DGLIDX.
	XLANAME	alphanumeric (1 to 8 character)	Translator Name. This subfield specifies the 1-character to 8-character alphanumeric name assigned to the translator.
	DGLIDX	numeric (1 to 8 digits)	Digilator Index. This subfield specifies the access code. Enter the 1-digit to 18-digit number assigned as the access code.
RESULT		see subfields	Result. This field contains subfields TRSEL, NOACCODE, and FTRTYPE.
	TRSEL	FTR	Translation Selector. This subfield specifies the translation selector. Enter FTR.
	NOACCODE	0-7	Number of Activation Code Digits. This subfield specifies the number of digits in the activation code for CWD. Enter a value from 0 to 7.
	FTRTYPE	CWD	Feature Result Translation Type. This field specifies the dial call waiting feature result translation type. Enter CWD.

Datafill example for table IBNXLA

Sample datafill for the CWD feature with the announcement or music option in table IBNXLA appears in the following example.

```
KEY                                          RESULT
  ------------------------------------------------------
  CUSTXLA                 58                 FTR 2 CWD
```

Business Set Dial Call Waiting (continued)

Tools for verifying translations

Business Set Dial Call Waiting does not use tools for verifying translations.

SERVORD

Assignment of options dial call waiting (CWD) and call waiting exempt (CWX) applies to a business set line using SERVORD. The operating company must perform the following:

- add these options to a line using the ADO (add option) command
- remove these options from a line using the DEO (delete option) command
- assign these options to a new line using the NEW (establish service) command
- assign options CWD and CWX to any OPTKEY on the set that is a DN key

Note: The system enters data in table KSETLINE when assignment of the Business Set Dial Call Waiting occurs using SERVORD.

SERVORD limits

Business Set Dial Call Waiting does not have SERVORD limits.

SERVORD prompts

The SERVORD prompts used to assign Business Set Dial Call Waiting to a business set appear in the following table.

SERVORD prompts for Business Set Dial Call Waiting

Prompt	Valid input	Explanation
DN_OR_ LEN	7-digit DN or LEN	Specifies the 7-digit DN or LEN of the line to be changed. Enter the DN or LEN.
OPTKEY	1 to 69	Indicates the key on an MBS assigned an option. Enter a value from 1 to 69
OPTION	CWD, CWX	Indicates the name of the option. Enter CWD or CWX.

SERVORD example for implementing Business Set Dial Call Waiting

An example of how to assign Business Set Dial Call Waiting to key 2 on a business set appears in the following SERVORD example. This assignment occurs using the ADO command.

Business Set Dial Call Waiting (end)

SERVORD example for Business Set Dial Call Waiting in prompt mode

```
SO:
> ADO
SONUMBER:   NOW 88 12  8 PM
>
DN_OR_LEN:
> 2 0 0 8
OPTKEY:
> 2
OPTION:
> CWD
OPTKEY:
> $
```

SERVORD example for Business Set Dial Call Waiting in no-prompt mode

```
>ADO $ 2 0 0 8 2 CWD $
```

The procedure to assign option CWX to key 1 on a business set using the ADO command appears in the following example.

SERVORD example for Business Set Dial Call Waiting in prompt mode

```
SO:
> ADO
SONUMBER:   NOW 88 12  8 PM
>
DN_OR_LEN:
> 2 0 0 8
OPTKEY:
>1
OPTION:
>CWX CWD
OPTKEY:
> $
```

SERVORD example for Business Set Dial Call Waiting in no-prompt mode

```
>ADO $ 2 0 0 8 1 CWX $
```

Call Forward/Automatic Dial Display

Ordering codes

Functional group ordering code: MDC00007

Functionality ordering code: does not apply

Release applicability

BCS22 and later versions

Requirements

To operate, the Call Forward/Automatic Dial Display feature has the following requirements:

- BAS Generic, BAS00003
- MDC Minimum, MDC00001

Description

The Call Forward/Automatic Dial Display displays a previously stored number on a Meridian business set (MBS) with display. The number that appears is the number programmed in the MBS for call forwarding or automatic dialing. Before the end user programs a number for the first time, a series of dashes appears. The display clears after the end user programs the feature for the first time.

Operation

The end user can check the number to which the call forwards. The end user can check the number to which the system automatically dials. This ability allows the end user to know that the Call Forward/Automatic Dial Display feature is reliable. The end user does not have to remember the numbers programmed. The end user does not have to program the set for each use of the feature.

The Call Forward/Automatic Dial Display feature allows end users of MBS with display telephones to identify the previous number programmed. Any number stored before appears on the top line of the display. The number appears on the top line of the display when the end user presses the key to program the telephone. If the telephone does not contain a stored number, a series of dashes appears. To program the previous number stored, the end user presses the key again to program the telephone. To program a new call forwarding number, the end user enters the new number. The end user presses the key to program the telephone.

Call Forward/Automatic Dial Display (continued)

Translations table flow

The Call Forward/Automatic Dial Display feature does not affect translations table flow.

Activation/deactivation by the end user

When the Call Forwarding or Automatic Dialing feature is active the Call Forward/Automatic Dial Display feature works automatically . The end user performs the following steps to determine the number to which the system forwards the MBS.

Activation/deactivation of Call Forward/Automatic Dial Display by the end user

At your telephone

1 Press the call forwarding key to deactivate call forwarding.

Response:

The system deactivates call forwarding.

2 Press the call forwarding key again to display the forwarded number.

Response:

The forwarded number appears.

3 Press the call forwarding key to activate call forwarding again. The end user can enter a new call forwarding number and press the call forwarding key.

Response:

The system activates call forwarding again.

Limits

The Call Forward/Automatic Dial Display feature does not have limits.

Interactions

Descriptions of the interactions between the Call Forward/Automatic Dial Display feature and other functionalities appear in the following paragraphs.

Automatic Dialing

The Call Forward/Automatic Dial Display feature acts with the Automatic Dialing feature through display of the forwarded number.

Call Forwarding

The Call Forward/Automatic Dial Display feature interacts with the Call Forwarding feature through display of the forwarded number.

Billing

The Call Forward/Automatic Dial Display feature does not affect billing.

Call Forward/Automatic Dial Display (end)

Station Message Detail Recording

The Call Forward/Automatic Dial Display feature does not affect Station Message Detail Recording.

Datafilling office parameters

The Call Forward/Automatic Dial Display feature does not affect office parameters.

Datafill sequence

The Call Forward/Automatic Dial Display feature does not affect datafill.

Tools for verifying translations

The Call Forward/Automatic Dial Display feature does not use translation verification tools.

SERVORD

The Call Forward/Automatic Dial Display feature does not use SERVORD.

EBS as a Message Center

Ordering codes

Functional group ordering code: MDC00007

Functionality ordering code: does not apply

Release applicability

BCS23 and later versions

Requirements

To operate, the EBS as a Message Center feature has the following requirements:

- BAS Generic, BAS00003
- MDC Minimum, MDC00001
- MDC Standard, MDC00003

Description

The EBS as a Message Center feature provides a message center functionality to smaller organizations. These organizations do not normally require an attendant console. An end user with a Meridian business set (MBS) with display can perform as a message center. The end user can perform this role for a small company or a departmental group in a larger establishment. The system forwards incoming trunk or internal calls to an MBS. The system forwards the calls if the called party does not answer at the original destination. An MBS can activate and deactivate message waiting indications at end user stations. To activate or deactivate the indications, the MBS user must press the message waiting indication (MWIDC) key or the message waiting query (MWQRY) key.

The system forwards calls to the primary directory number (PDN) at the message center. The message center operator that records the messages receive the PDN calls. If a station forwards calls to a set that is not attended, the system can activate the EBS as a Message Center feature. The system can activate this feature if the system forwards calls for the second set to the message center.

Message center end users can call for messages. To call for messages, the end user must dial the message center or a designated retrieval code. The operator relays messages for the station of the caller.

As a message center, an MBS with display handles direct calls. Direct calls are calls to the PDN at the message center. A caller makes these calls to

EBS as a Message Center (continued)

retrieve messages. The calling number appears for internal, external, transferred, and attendant-extended calls.

Operation

An MBS can function as a message center. For this condition to occur, the MBS must have a display and two special function key and liquid crystal display (LCD) pairs. One pair is for MWIDC and the other pair is for MWQR. The message center end user can have an MBS or a 500/2500 set with message waiting capability.

> ***Note:*** An MBS with display without a MWQRY key/LCD pair can function as a message center. The MWQRY capability depends on assignment of the MWIDC key.

When a message waiting indicator is active for a station, the operator queues a request against that station. When the operator deactivates a message waiting indicator, the operator dequeues a request against that station.

When a PDN receives a call, the system activates MWIDC and MWQRY keys. The PDN is at an MBS designated as a message center operator station. An MWIDC flashing key indicates that the system receives messages for that station. The system activates the message waiting signal. An MWIDC key that winks represents a disabled station or a called station that does not have message waiting.

The MWIDC key remains if the system does not receive messages. This key alerts the operator to start message waiting if the caller leaves a message. The message center operator uses this key to deactivate a message waiting indication after retrieval of messages for a called station.

Message requests for a station that differs from the calling number can appear at the message center. In this occurrence, deactivation of the message waiting indicator begins activation of the MWQRY key. After MWQRY begins, the operator enters the DN for the station, and the system disables MWQRY. This action activates the MWIDC key. This action allows the operator to update the message status for the specified DN.

Translations table flow

Descriptions of the EBS as a Message Center translations tables appear in the following list:

Limits

The following limits apply to the EBS as a Message Center feature:

- Message center attendants and station end users with message waiting capability on an MBS or 500/2500 set are message center end users.
- Each MBS and 500/2500 set that functions as a message center must have a display and a special function key and LCD pair.
- Features that use the MWIDC and MWQRY keys can associate with the PDN on an MBS. The PDN key must be the first key on an MBS. The MWIDC and the MWQRY keys can have a main set or add-on location. The keys can have a main set or add-on location if each key has an associated LCD pair.
- Warm restarts and switch activities (SWACT) do not affect the EBS as a Message Center feature. This feature is not available under emergency stand-alone (ESA) conditions on lines that a DMS-100 remote serves. A remote switching center (RSC) or remote line concentrating module (RLCM) are examples of DMS-100 remotes.

Interactions

Descriptions of the interactions between the EBS as a Message Center feature and other functionalities appear in the following paragraphs.

Call Forwarding (CFW)

If Call Forwarding (CFW) is active, the information about the first call forward base station in a chain appears at the message center.

Call Hold

If you place an active call on Call Hold (CHD), the EBS as a Message Center feature remains active. The MWIDC and MWQRY LCDs turn off until the call resumes. If the call goes on hold during digit collection, the system aborts digit collection. The system can restart digit collection when the call goes off hold. Press the MWQRY key to take the call off hold. When you take a call off hold, the state of the MWIDC key LCD returns to the pre-CHD state.

Call Pickup

The EBS as a Message Center feature is not active when the message center end user answers a call.

Call Transfer

The EBS as a Message Center can be active and the end user initiates Call Transfer (CXR). When this condition occurs, the system takes down an EBS as a Message Center. The system treats a call transferred to the message center as a direct call.

EBS as a Message Center (continued)

Call Waiting

The EBS as a Message Center feature is active when the called party answers call waiting on the PDN.

Hunting

The system forwards calls to the message center. The system forwards these calls if a hunt group is busy and the hunt group overflows to the message center. This action occurs when the Hunting feature is active.

Multiple Appearance Directory Number

An EBS as a Message Center can associate with the primary member of a multiple appearance directory number (MADN) group.

Three-Way Calling

The EBS as a Message Center can be active and the end user initiates Three-Way Calling (3WC). When this condition occurs, the system takes the EBS as a Message Center feature down.

Activation/deactivation by the end user

The EBS as a Message Center feature does not require activation or deactivation by the end user.

Billing

The EBS as a Message Center feature does not affect billing.

Station Message Detail Recording

The EBS as a Message Center feature does not affect Station Message Detail Recording.

Datafilling office parameters

The EBS as a Message Center feature does not affect office parameters.

Datafill sequence

The tables that require datafill to provide the EBS as a Message Center feature appear in the following table. The tables appear in the correct entry order.

Note: Use SERVORD to enter data in this table. A datafill procedure or example is not available. See “SERVORD" for an example of how to use SERVORD to enter data in this table.

Datafill requirements for EBS as a Message Center

Table	Purpose of table
KSETFEAT	Keyset Feature. This table associates feature appearances with feature instances and various feature options. Feature appearances are ISDN LT feature activators and indicators.

Tools for verifying translations

The EBS as a Message Center feature does not use tools for verifying translations.

SERVORD

The EBS as a Message Center feature enhances the Service Order System (SERVORD). This feature allows you to delete or add options MWIDC and MWQRY. Use the ADO (add option) to add these options. Use the DEO (delete option) commands to delete these options. Assign option MWIDC before you assign option MWQRY.

SERVORD limits

The EBS as a Message Center feature does not have SERVORD limits.

SERVORD prompts

The SERVORD prompts that the system uses to change EBS as a Message Center appear in the following table.

SERVORD prompts for EBS as a Message Center (Sheet 1 of 2)

Prompt	Valid input	Description
DN_OR_LEN	7-digit DN or LEN	Specifies the 7-digit DN or LEN of the line to change. Enter the DN or LEN.
Note: The system enters data in table KSETFEAT when you assign EBS as a Message Center through SERVORD.		

EBS as a Message Center (end)

SERVORD prompts for EBS as a Message Center (Sheet 2 of 2)

Prompt	Valid input	Description
OPTION	MWIDC, MWQRY	Indicates the name of the option. Enter MWIDC or MWQRY or MWIDC and MWQRY.
OPTKEY	1 to 69	Indicates the key on an MBS with an assigned option. Enter a value from 1 to 69.
Note: The system enters data in table KSETFEAT when you assign EBS as a Message Center through SERVORD.		

SERVORD example for adding EBS as a Message Center

The addition of option MWIDC to key 5 and option MWQRY to key 6 appears in the following SERVORD example. In this example, the ADO command adds the options to an MBS or 500/2500 set.

SERVORD example for EBS as a Message Center in prompt mode

```
>ADO
SONUMBER:     NOW  87 10 01 PM
>
DN_OR_LEN:
> 5554725
OPTKEY:
> 5
OPTION:
> MWIDC
OPTKEY:
>6
OPTION:
>MWQRY
OPTKEY:
> $
```

SERVORD example for EBS as a Message Center in no-prompt mode

```
> ADO  $  5554725  5  MWIDC  6  MWQRY  $
```

EBS as a Message Center - Enhancements

Ordering codes

Functional group ordering code: MDC00007

Functionality ordering code: does not apply

Release applicability

BCS29 and later versions

Requirements

The EBS as a Message Center - Enhancements feature has the following requirements:

- BAS Generic, BAS00003
- MDC Minimum, MDC00001
- MDC Standard, MDC00003

Description

Feature AL0206, EBS as a Message Center - Enhancements, allows a Meridian business set (MBS) to function as a message center. The MBS can activate and deactivate message waiting indication (MWIDC) on other stations in the customer group of the message center. The message waiting query option (MWQRY) allows the message center to query the status of message waiting (MWT). The message center can query the status of MWT on any station in the customer group of the message center. The MWQRY option can activate or deactivate MWT on the station.

The EBS as a Message Center - Enhancements feature limits interaction with other features. These features include three-way calling (3WC), automatic call distribution (ACD), and uniform call distribution (UCD). The EBS as a Message Center - Enhancements feature does not allow the activation of MWQRY from an idle line.

The EBS as a Message Center - Enhancements improves feature AL0206. This feature removes some of the message center limits that apply to interactions with other MDC features. This feature provides an improved method to activate option MWQRY.

Operation

The MBS must have the following parts to operate as a message center:

- a display
- option MWIDC assigned to a key that has an associated lamp

EBS as a Message Center - Enhancements (continued)

The message center can require MWQRY capabilities. When this condition occurs, the MBS must have option MWQRY assigned to a key that has an associated lamp.

Note: To function, the MWQRY requires the assignment of MWIDC. The MWIDC can function without the assignment of MWQRY.

Message center originated calls

A message center can originate a call to a station in the customer group of the message center. When this event occurs, the MWIDC lamp indicates the status of MWT for the dialed station. The lamp is in one of the following states:

- the ON indicates the message center did not activate MWT against the station.
- the FLASH indicates the message center activated MWT against the station.
- the OFF indicates the station does not have MWT.

The dialed station can contain the MWT feature. When this condition occurs, the message center can press the MWIDC key to activate or deactivate MWT for the station. If MWT is on, the message center toggles the MWT off. If MWT is off, the message center toggles the MWT on. The update of the MWIDC lamp occurs when the message center operator hears ringing. The operator can activate or deactivate MWT before the station answers.

Note: A message center can deactivate the MWT requests from this message center. A message center cannot deactivate MWT requests from other stations, from other message centers, or from an attendant console.

Message center terminated calls

The following three types of calls can terminate to a message center:

- direct calls
- indirect calls
- external calls

Direct calls

A direct call is a call placed directly to the message center by any method other than call forwarding (CFW). The calling station must be in the customer group of the message center to allow EBS as a Message Center - Enhancements to activate.

When a direct call terminates to the message center, the directory number (DN) lamp of the message center on the MBS flashes. The DN of the caller

EBS as a Message Center - Enhancements (continued)

appears. The message center operator can press the message center DN key. When this event occurs, the system updates the MWIDC lamp to indicate the status of MWT for the calling station. The lamp is in one of the following states:

- the ON indicates the message center did not activate MWT against the station of the caller.
- the FLASH indicates the message center activated MWT against the station of the caller.
- the OFF indicates the station of the caller does not have MWT.

The calling station can have the MWT feature. When this condition occurs, the message center operator presses the MWIDC key to activate or deactivate MWT for the station. If MWT is on, the message center toggles the MWT off. If MWT is off, the message center toggles the MWT on. The MWIDC lamp indicates the status of MWT on the calling station when the message center becomes active on the call. If the message center places the caller on hold, the MWIDC lamp goes off. This action occurs because the message center is not active on the call.

Indirect calls

An indirect call is a call that terminates to the message center involved earlier with CFW. The forwarding station must be in the customer group of the message center to allow EBS as a Message Center - Enhancements to activate. The calling station does not have limits. The calling station can be a line outside the customer group of the message center, a trunk, or an attendant console.

When an indirect call terminates to the message center, the DN lamp of the message center on the MBS flashes. The DN of the caller and the DN of the station appears. The called station is the station that forwarded the call to the message center. The message center operator can press the message center DN key. When this event occurs, the system updates the MWIDC lamp to indicate the status of MWT for the called station. The called station is the station that forwarded the call to the message center. The lamp is in one of the following states:

- the ON state indicates the message center did not activate MWT against the called station.
- the FLASH state indicates the message center activated MWT against the called station.
- the OFF state indicates the called station does not have MWT.

EBS as a Message Center - Enhancements (continued)

Note: The MWIDC lamp applies to the called station. The called station is the station that forwarded the call to the message center. The MWIDC lamp does not apply to the station to which the message center speaks.

The called station can have the MWT feature. When this condition occurs, the message center can press the MWIDC key to activate or deactivate MWT for the station. If MWT is on, the message center toggles the MWT off. If MWT is off, the message center toggles the MWT on. The MWIDC lamp indicates the status of MWT on the called station when the message center becomes active on the call. If the message center places the call on hold, the MWIDC lamp goes out. This action occurs because the message center is not active on the call.

External calls

An external call is a call that terminates to the message center from outside the customer group of the message center. A station in the customer group did not forward this call. An external call can terminate to the message center. When this condition occurs, the MWIDC lamp is off. This setting indicates that MWT does not apply to the calling station.

Message center query

The MBS message center query, or message waiting query (MWQRY), is an optional feature for message centers. The MWQRY allows message centers to dial a station in the customer group of the message center. The message center can query the MWT status for the station. The MWQRY feature allows message centers to perform this action without making a call to the station. The MWQRY can be active if the station is idle. The MWQRY can be active if the station is active on a call. The station can be active on another call when MWQRY is active. When this event occurs, the system places the active call on hold. The lamp associated with the message center DN blinks to indicate that the call is on hold.

The message center operator presses the MWQRY key to activate MWQRY. The MWQRY lamp lights. The operator enters the digits of the station the system must query. The MWQRY lamp flashes, and the MWIDC lamp

EBS as a Message Center - Enhancements (continued)

indicates the status of MWT on the dialed station. The lamp is in one of the following states:

- the ON indicates the message center did not activate MWT against the queried station.
- the FLASH indicates the message center activated MWT against the queried station.
- The OFF indicates the queried station does not have MWT. The OFF can indicate the dialed digits do not correspond to a station in the customer group of the message center.

Note: A query of a station does not cause the station to ring. A query of a station does not prevent the station from receiving calls during the query of the station.

The queried station can have the MWT feature. When this condition occurs, the message center can press the MWIDC key to activate or deactivate MWT for the station. If MWT is on, the message center toggles the MWT off. If MWT is off, the message center toggles the MWT on. To deactivate MWQRY, the message center operator presses the release (RLS) key, the MWQRY key, or the message center DN key.

If the message center activates MWQRY and does not dial a correct DN, the message center receives 5 s of reorder treatment. The MWQRY becomes idle. The digits entered can be a correct DN of a station that is outside the customer group of the message center. When this event occurs, the message center does not receive treatment. The MWIDC lamp is off. This state indicates that the message center cannot leave an MWT request against this station. The message center can attempt to activate a feature during the query of a station. If this event occurs, the message center receives 5 s of reorder treatment. The message center can activate or deactivate MWT against the queried station when the message center receives treatment.

Message retrieval

The message center can queue MWT requests against a station if the station has the MWT feature. A station can retrieve messages from the message center. A station can dial the message center directly or use the call request retrieval (CRR) access code. These two methods of message retrieval do not remove the message center MWT request for the station. The message center operator can use the MWIDC key to clear the MWT request.

Message center group interaction

The MBS stations in a customer group that have EBS as a Message Center - Enhancements can interact as separate entities. These MBS stations can

EBS as a Message Center - Enhancements (continued)

interact as a group. By default, the stations interact as separate entities. Options MWIDC and MWQRY for a message center provide the MWT status for requests from the message center involved in the call. A message center does not automatically recognize the message center MWT requests of another message center. To recognize the requests of another message center, one message center must call forward the other message center. Deactivation of MWT by a message center applies to requests from the message center involved in the call. This action does not occur if one message center call forwards to another message center call.

Group interaction allows all message centers in the customer group to act as one large message center. One station can activate MWT on a station. When this event occurs, the MWT appears as if all the message centers in the group activated the MWT on the station. This condition allows a station to have only one message center MWT request. A message center in the customer group can activate or deactivate message center MWT on any station in that customer group. One message center in the group can activate message center MWT on a station. Any other message center in the group can deactivate message center MWT on the station.

The option MCGROUP in table CUSTSTN (Customer Group Station Option) allows you to assign the group interaction capability. You can assign this capability for each customer group. The message centers in a customer group with option MCGROUP, act as one large message center.

Translations table flow

EBS as a Message Center - Enhancements does not affect translations table flow.

Activation/deactivation by the end user

EBS as a Message Center - Enhancements does not require activation or deactivation by the end user.

EBS as a Message Center - Enhancements (continued)

Limits

The following limits apply to EBS as a Message Center - Enhancements:

- When a conference call includes a message center, the MWIDC lamp is off. One of the following types of conference calls can include a message center:
  - 3WC
  - flexible station controlled conference
  - meet-me conference
  - executive conference
  - preset conference
  - multiple appearance directory number (MADN) privacy release conference
  - MADN bridging
  - executive busy override (EBO) conference
- Option MWQRY is compatible with all conference calls.
- Features like MADN and hunt groups have limited interaction with call request and call forwarding (CFW). These features have limited interaction with EBS as a Message Center - Enhancements. The EBS as a Message Center - Enhancements couples with call forwarding and call request. Features that have limits on CFW and MWT impose these limits on EBS as a Message Center - Enhancements.
- The MWT applies to the primary directory number (PDN) of an MBS station. Message centers cannot activate or deactivate MWT for stations when message centers are active on a specified call. This call is a call that arrived at or originated from a secondary DN of the station. The MWQRY provides the status of MWT for an MBS station if the system queries the PDN of the station.

Feature interactions

The interactions between EBS as a Message Center - Enhancements and other functionalities appear in the following paragraphs.

Automatic Call Distribution

The assignment of the EBS as a Message Center - Enhancements feature can occur for any member of an Automatic Call Distribution (ACD) group. The feature becomes active when the ACD group member answers an incoming call. All features and operational measurements (OM) that apply to ACD agents are compatible with ACD agents. These ACD agents have EBS as a Message Center - Enhancements assigned.

EBS as a Message Center - Enhancements (continued)

An MBS station can retrieve a message center MWT request in which the message center is an ACD agent. When this condition occurs, the system can select any active ACD agent in the ACD group to service the incoming call. The ACD agent that activated message center MWT against the MBS station is not always the ACD member selected to service the CRR. If all ACD agents are busy, the system queues the incoming call like normal ACD operation.

Call Forwarding

Message center originated calls can encounter Call Forwarding (CFW). When this condition occurs, the MWIDC lamp provides MWT indication for the station to which the system forwards the call. The system can forward the call outside the customer group of the message center. When this event occurs, the system turns the MWIDC lamp off. This event indicates that EBS as a Message Center - Enhancements applies only in the customer group of the message center.

For calls forwarded to a message center, the MWIDC lamp provides the MWT indication for the station that forwarded the call. The system can forward a message center set to another message center in the same customer group. This event allows calls that terminate to the receiving message center to act like direct or indirect calls. The message center can activate or deactivate MWT requests.

Call Park

Option MWIDC is compatible with Call Park (PRK). A message center can use PRK to retrieve a call parked earlier. When this event occurs, the MWIDC lamp indicates the status of MWT for the parked call. This compatibility applies to directed call park (DPRK).

Call Pickup

Option MWIDC is compatible with Call Pickup (CPU). A message center can use CPU to answer an incoming call to another station. When this event occurs, the MWIDC lamp indicates the status of MWT for the incoming call.

Call Request

The message center recognizes Call Request and message center MWT as two separate features. The end user can use the CRR code to retrieve call requests and message center MWT requests.

Other stations or other message centers can activate call requests against message centers. A message center can leave both a message center MWT request and a call request against the same station. Call requests activate with the call request activation code. The MWIDC key activates Message center MWT requests.

EBS as a Message Center - Enhancements (continued)

The CRR allows MWT end users to dial the CRR code to retrieve messages from other stations or the attendant console. Stations can use the same CRR code to retrieve messages from a message center.

A station can use the CRR code to retrieve a call request. When this event occurs, the retrieval does not follow call forwarding if the station or message center that initiated the call request forwarded the set. The station can use the CRR code to retrieve a message center MWT request. The station retrieves the MWT request after the call forwarding that the message center programmed. This action occurs if the system forwards the message center to a station that does not have EBS as a Message Center - Enhancements.

The call request exempt option of the MWT feature does not apply to message center MWT requests. The call request exempt option of the MWT feature allows a station to block other stations from leaving call requests against the station. The station uses Call Request Delete All (CRDA) access codes to remove call requests queued against the station. The message center can use the MWIDC key to deactivate MWT on a station. When this event occurs, the message center removes only the request from the message center or message center group. The message center does not remove call requests from other stations.

Call Transfer

The system can transfer a direct call to a message center. When this event occurs, the MWIDC lamp indicates the MWT status of the party that the system transferred. An indirect call can include the transferred party. When this condition occurs, the MWIDC lamp indicates the status of MWT for the originally called party.

During a Call Transfer (CXR) that another station originated, the following phases occur on the MWIDC lamp on the message center:

- The MWT status of the three-way call controller appears on the MWIDC lamp for direct calls. The MWT status appears on the MWIDC lamp during the second leg of the three-way call. For indirect calls, the MWT status of of the forwarding station appears on the MWIDC lamp.
- The MWIDC lamp is off for all calls during the three-way call conference stage.
- The MWT status of the connected party appears on the MWIDC lamp for direct calls. The MWT status appears on the MWIDC lamp after a CXR. For indirect calls, the MWT status of the originally called party appears on the MWIDC lamp.

EBS as a Message Center - Enhancements (continued)

Executive Busy Override

A message center can use Executive Busy Override (EBO) to barge in on a call. When this event occurs, the MWIDC lamp stays off during the EBO conference. The message center or the other party can reconfigure the call to a two-party call. The message center flashes off the other party, or the other party releases the call. When this event occurs, the MWIDC lamp on the message center indicates the MWT of the called party.

Executive Conference

A message center with MWIDC involved in an executive conference is active during the consult leg of the executive conference. The consult leg is the add-on phase of the executive conference. The MWIDC lamp does not light during the conference leg of the executive conference. The message center can activate option MWQRY from the consult leg or from the conference leg of an executive conference.

Flexible Station Controlled Conference

A message center with MWIDC involved in the Flexible Station Controlled Conference (CFN30) feature is active during the consult leg of the conference. The MWIDC lamp does not light during the conference leg. The message center can activate option MWQR from the consult leg or from the conference leg of the conference.

Hunt Groups

Call forwarding and MWT apply only to the pilot member of multiline hunt (MLH) groups and distributed line hunt (DLH) groups. Message centers can query, activate, and deactivate MWT on the pilot members of the group. Message centers do not have limits for directory number hunting (DNH).

Key Short Hunt

The EBS as a Message Center - Enhancements feature is compatible with Key Short Hunt (KSH). Calls that arrive at a message center that has the KSH feature activate the KSH if the primary DN is busy. The CRR of a message center MWT request also activates the KSH feature if the primary DN is busy.

Multiple Appearance Directory Number

Call forwarding and MWT apply only to the primary member of a multiple appearance directory number (MADN) group. Message centers can activate and deactivate MWT only on primary MADN group members. To assign EBS as a Message Center - Enhancements, an MBS must have a primary MADN line or non-MADN line as the PDN. The assignment of a MADN secondary line to the PDN of an MBS station can occur. When this event occurs, the message center cannot add option MWIDC to the station.

EBS as a Message Center - Enhancements (continued)

The following rules apply to message center originated calls that terminate to MADN groups:

- Before the MADN group answers the call, the MWIDC lamp indicates the status of MWT of the primary MADN group member. The message center can activate or deactivate MWT against the primary member.
- If the primary member answers the call, the MWIDC lamp continues to indicate the MWT status for the primary member.
- If a secondary member answers the call, the MWIDC lamp goes off.

Note: These rules apply to both MADN single call arrangement (SCA) and MADN multiple call arrangement (MCA).

The MADN hold interacts with EBS as a Message Center - Enhancements. The MWT feature does not apply to MADN group secondary members. If a MADN group secondary member calls a message center, the MWIDC lamp of the message center stays off. The MADN group secondary member can activate MADN hold. The MADN group primary member can retreive the held call. When this event occurs, the MWIDC lamp indicates the status of MWT of the MADN group primary member.

The MADN privacy release and MADN bridging do not interact with EBS as a Message Center - Enhancements in the conference state. The message center MWIDC lamp is off when the secondary member joins the conference or bridged call. The reconfiguration of a two-party call occurs when the MADN members release from the call. When this event occurs, the status of the specified party appears on the MWIDC. The original call can be a direct call or an indirect call. The type of call determines if the status of the party appears on the MWIDC.

Preset Conference

A message center with MWIDC involved in a preset conference is active during the consult leg of the conference. The MWIDC lamp does not light during the conference leg of the preset conference. The message center can activate option MWQRY from the consult leg or the conference leg of a preset conference.

Three-Way Calling

An MBS with EBS as a Message Center - Enhancements can originate Three-Way Calling (3WC). The MWIDC lamp stays off when the message center initiates the three-way call. The message center completes dialing for the second leg of the three-way call. When this event occurs, the MWIDC lamp indicates the status of MWT for the called party. After the called party answers the call, the message center can switch to the first leg of the three-way

EBS as a Message Center - Enhancements (continued)

call. At this time the MWIDC indicates the MWT status of the party. The message center can activate or deactivate MWT on either leg of the three-way call. This action can occur during the consult leg of the three-way call. After the conferencing of the three-way call, the MWIDC lamp turns off. The message center cannot activate or deactivate MWT on the parties. The message center can use MWQRY at any time.

A station can initiate a three-way call to the message center. The call can be a direct call. When this event occurs, the MWIDC lamp indicates the MWT status of the station that initiates the three-way call. If the call is an indirect call, the MWIDC lamp indicates the MWT status of the called station. The message center can activate and deactivate MWT for the associated party. After the conferencing of the three-way call, the MWIDC lamp turns off. The message center cannot activate or deactivate MWT for the party involved. The message center can use MWQRY at any time during the three-way call.

Uniform Call Distribution

The message center can assign EBS as a Message Center - Enhancements to any member of a uniform call distribution (UCD) group. The feature becomes active when the UCD group member answers an incoming call. All features and OMs that apply to UCD agents are compatible with UCD agents assigned EBS as a Message Center - Enhancements.

An MBS station can retrieve a message center MWT request in which the message center is a UCD agent. When this event occurs, the MBS station selects the UCD agent that activated message center MWT against the retrieving station. The UCD agent must handle the CRR. The calling MBS receives busy treatment if the UCD agent is busy on another call. The system does not queue the incoming call in the incoming call queue of the UCD group. If the UCD agent programmed call forwarding, the incoming call follows the call forwarding that the UCD agent programmed.

Billing

The EBS as a Message Center - Enhancements does not affect billing.

Station Message Detail Recording

The EBS as a Message Center - Enhancements does not affect Station Message Detail Recording (SMDR).

Datafilling office parameters

The EBS as a Message Center - Enhancements does not affect Station Message Detail Recording (SMDR).

EBS as a Message Center - Enhancements (continued)

Datafill sequence

The tables that require datafill to implement EBS as a Message Center - Enhancements appear in the following table. The tables appear in the correct entry order.

Datafill requirements for EBS as a Message Center - Enhancements

Table	Purpose of table
CUSTSTN	Customer Group Station Option. This table contains the station options assigned to each customer group.
KSETFEAT (Note)	Business Set and Data-Unit Feature Table. The line features assigned to the business sets and data units (DU) that appear in table KSETLINE appear in this table. The Meridian digital telephone sets and DUs that appear in table IVDINV appear in this table.
Note: Use SERVORD to enter data in this table. A datafill procedure or example is not available. See “SERVORD" for an example of how to use SERVORD to enter data in this table.	

Datafilling table CUSTSTN

Table CUSTSTN (Customer Group Station Option) contains the station options assigned to each customer group. The EBS as a Message Center - Enhancements adds option MCGROUP to table CUSTSTN. This option allows all the message centers in the customer group to act as one large message center.

The datafill for EBS as a Message Center - Enhancements for table CUSTSTN appears in the following table. The fields that apply to EBS as a Message Center - Enhancements appear in this table. See the data schema section of this document for a description of the other fields.

Datafilling table CUSTSTN (Sheet 1 of 2)

Field	Subfield or refinement	Entry	Explanation and action
CUSTNAME		customer group name	Customer Group Name. This field specifies the 1-character to 16-character alphanumeric name assigned to the customer group. Enter the customer group name.
OPTNAME		MCGROUP	Option Name. This field specifies the name assigned to the option. Enter MCGROUP.

EBS as a Message Center - Enhancements (continued)

Datafilling table CUSTSTN (Sheet 2 of 2)

Field	Subfield or refinement	Entry	Explanation and action
OPTION		see subfield	Option. This field contains subfield OPTION.
	OPTION	MCGROUP	Option. This subfield specifies the name of the option. Enter MCGROUP.

Datafill example for table CUSTSTN

Sample datafill for table CUSTSTN with option MCGROUP assigned appears in the following example.

MAP example for table CUSTSTN

```
TABLE: CUSTSTN

CUSTNAME                OPTNAME                OPTION
-------------------------------------------------------
MDCGRP1                 MCGROUP                MCGROUP
```

Tools for verifying translations

The EBS as a Message Center - Enhancements does not use tools for verifying translations.

SERVORD

The entry of data in table KSETFEAT occurs through SERVORD.

SERVORD limits

The EBS as a Message Center - Enhancements does not have SERVORD limits.

SERVORD prompts

The SERVORD prompts used to assign EBS as a Message Center - Enhancements to a current line appear in the following table.

Use the Service Order System (SERVORD) command ADO (add option) to assign options MWIDC and MWQRY. The DEO (delete option) command removes options MWIDC and MWQRY.

Option MWIDC allows a message center operator to turn MWIDC to ON on an MBS. The ON setting indicates that calls forwarded to the message center wait for retrieval. Option MWQRY allows a message center operator to cancel

EBS as a Message Center - Enhancements (continued)

a displayed DN. The message center operator can enter a correct DN to check messages for call retrieval. This procedure is a requirement when a caller calls the message center from a set other than the set of the caller. The caller calls the set for message retrieval.

Servord prompts for EBS as a Message Center - Enhancements

Prompt	Valid input	Explanation
DN_OR_LEN	7-digit DN or LEN	Specifies the 7-digit DN or LEN of the line to change. Enter the DN or LEN.
OPTKEY	1 to 69	Indicates the key on an MBS that has an option assigned. Enter a value from 1 to 69.
OPTION	MWIDC, MWQRY	Indicates the name of the option. Enter MWIDC or MWQRY.
Note: When you use SERVORD to assign EBS as a Message Center - Enhancements, the system automatically enters data in table KSETFEAT.		

SERVORD examples for implementing EBS as a Message Center - Enhancements

You can use the ADO command to assign option MWIDC to key 9 on an MBS associated with DN 621-0103. The assignment of this option appears in the following SERVORD example.

SERVORD example for EBS as a Message Center - Enhancements for adding option MWIDC to an existing line in prompt mode

```
>
SO:
> ADO
SONUMBER: NOW 92 10 01 PM
>
DN_OR_LEN:
> 6210103
OPTKEY:
> 9
OPTION:
> MWIDC
OPTKEY:
> $
```

EBS as a Message Center - Enhancements (end)

SERVORD example for EBS as a Message Center - Enhancements for adding option MWIDC to an existing line in no-prompt mode

```
>ADO $ 6210103 9 MWIDC $
```

You can use the ADO command to assign option MWQRY to key 3 on an MBS associated with DN 621-7177. The assignment of this option appears in the following SERVORD example.

SERVORD example for EBS as a Message Center - Enhancements for adding option MWQRY to an existing line in prompt mode

```
>
SO:
> ADO
SONUMBER: NOW 92 10 01 PM
>
DN_OR_LEN:
> 6217177
OPTKEY:
> 3
OPTION:
> MWQRY
OPTKEY:
> $
```

SERVORD example for EBS as a Message Center - Enhancements for adding option MWQRY to an existing line in no-prompt mode

```
> ADO $ 6217177 3 MWQRY $
```

Enhanced EBS Reason Display

Ordering codes

Functional group ordering code: MDC00007

Functionality ordering code: does not apply

Release applicability

BCS25 and later versions

Requirements

To operate, Enhanced EBS Reason Display has the following requirements:

- BAS Generic, BAS00003
- MDC Minimum, MDC00001

Description

The Enhanced EBS Reason Display adds to the information on redirected calls that can appear on a Meridian business set (MBS). The system displays messages to inform the end user of the reason for a call redirection or to provide information about the progress of the call. This information is the reason display. For example, if a call is call forwarded, the message CALL FWD appears on an MBS. The end user can answer calls that different features redirect. Enter the displayed messages for each customer group through table control.

The Enhanced EBS Reason Display replaces the Call Forward Reason Display feature (AD0414).

Operation

The Enhanced EBS Reason Display is available for the M5209 and M5312 MBSs. The M5209 and M5312 MBSs have 2-line by 24-character displays. The Enhanced EBS Reason Display is available for the NT4X20 SL-100 business set. The NT4X20 SL-100 business set has a 2-line by 16-character display.

The Enhanced EBS Reason Display is for intragroup calls and for intergroup calls that have customer group transparency established. The Enhanced EBS Reason Display enhances the following MDC features:

- Call Forward (CFU, CFI, CFB, and CFD)
- Call Pickup (CPU, DCPU, and DCBI)
- Call Park (CPRK and DCPK)
- Conference (station-controlled, meet-me, preset, and attendant)

Enhanced EBS Reason Display (continued)

- Three-Way Calling (3WC)
- Call Transfer (CXR)

Display information

Classification of the information displayed on an MBS is in the following categories:

- NAME is the name of the calling or called party.
- DN is the directory number (DN) of the calling or called party.
- REASON indicates why a feature activation redirects or affects the call.
- RNAME is the name of the party that redirected the call.
- RDN is the DN of the party that redirected the call.

The system can display a message to indicate an external call. A message also can indicate that call information is not available. Enter reason display messages in Table REASONS (Business Set Reason Display). You can use a set of default messages for display. You can enter customized messages.

The top line displays the name and DN of the called or calling party. If the name and DN do not both fit on the top line, only the name appears. Reason information and the redirected name and DN appears, if applicable, on the bottom line. If all the information does not fit, only the reason information appears.

A display name can contain a maximum of 15 characters and can contain any combination of correct display characters. The correct display characters are numerals 0 to 9, uppercase A to Z, and the following symbols: period (.), colon (:), asterisk (*), octothorpe (#), and dash (-). Entry of a space must occur as an underscore (_). Accents are not correct display characters. Entry of lowercase letters can occur. These letters appear as capitals on the display.

The MBS Display Called Number feature (BV0987) and the MBS Display Calling Number feature (BV0989) in feature package NTX108AA supports the display of the DNs. Name and reason display is available. Name and Reason Display feature (AL0617) supports name and reason display in feature package NTX946AB.

The maximum length for a DN display is ten digits for incoming calls. Option DISPDIGS in Table CUSTSTN requires datafill for a name to display for incoming and outgoing calls on an MBS or NT4X20 SL-100 with display. Subfield NUMODIGS in Table CUSTSTN determines the number of digits for display. The entered value determines if the calling number can truncate. For outgoing calls, the dialed DN is echoed as dialed.

Enhanced EBS Reason Display (continued)

The general location of the DN and reason display messages on the 2-line by 16-character display appears in the following figure.

Table flow for Enhanced EBS Reason Display

```
NAME     DN

REASON     RNAME     RDN
```

Redirected incoming calls

For redirected incoming calls, the calling party (DN) appears in the top display line. The reason for call redirection (REASON) and the redirecting DN (RDN) appear in the bottom display line.

```
NAME     DN

REASON     RNAME     RDN
```

Redirected outgoing calls

For redirected outgoing calls, the connected party (DN) appears in the top display line. The reason for redirection (REASON) and the redirecting DN appear in the bottom display line.

Reason messages

A reason message is a display message defined in Table REASONS. Default reason messages appear in Table REASONS. The DMS switch enters the default reason messages automatically. The set of default reasons is the DEFAULTSET. Entry for other sets of reasons can occur. Reason display messages can contain a maximum of 15 characters. Reason messages that contain fewer characters increase the probability of a redirecting directory number (RDN) displaying. If both the reason and the RDN do not fit on the display line, only the reason appears.

Enhanced EBS Reason Display (continued)

The different default reason messages defined in the DEFAULTSET in Table REASONS appear in the following table.

Default reason messages

Reason	Default message	Meaning
External calls	OUTSIDE CALL	For terminator of the call. Message denotes line or trunk calls outside the customer group or family.
Conferences	CONFERENCE	For terminator of the call. Message denotes multiparty conference calls. Multiparty conference calls are three-way, station-controlled, meet-me, preset, and attendant calls.
Call transfer	TRANSFER RECALL	For the party that transferred a call. Message denotes the call transfer party recalls.
Call forward:		
CFU—called party	CALL FWD	For terminator of the call.
CFB—called party	BUSY FWD	For terminator of the call.
CFD—called party	NO ANS FWD	For terminator of the call.
CFU, CFB, CFD—calling party	FORWARD	For terminator of the call.
Call park	CPK RECALL	For parking party of the call. Message indicates that the call park timer expired and that the parked party recalls.
Call pickup (CPU, DCPU)	PICKUP	For party that picks up the call.
	PICKED UP	For party that was picked up.
Information not available	NO CALL INFO	Used when call information is not available.

Incoming external calls

External calls are calls that originate from a line or trunk outside the customer group. A message that indicates an external call appears. The default message is OUTSIDE CALL. Enter table REASONS with a different reason message to change this message. Incoming plain old telephone service (POTS) DNs do not appear.

Enhanced EBS Reason Display (continued)

The display for an incoming call from an external line or trunk when customer group transparency is not established appears in the following figure.

Incoming external call without customer group transparency

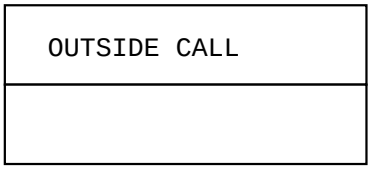

The external call message appears in the top display line.

Call terminator

Enter the KSET_INTER_GRP_DISP office parameter to Y to establish customer group transparency. Calls from outside the customer group or customer group family have their DN or trunk common language location identifier (CLLI) displayed. This display replaces the OUTSIDE CALL message.

The display for an incoming call from DN 555-1111 when the established customer group transparency appears in the following figure.

Incoming external call with customer group transparency

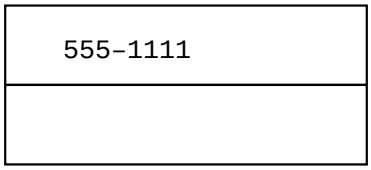

The calling party directory number is shown in the top display line.

Call terminator

Outgoing trunk calls

Outgoing calls to a trunk in the same customer group provide a short CLLI name. These calls include calls between two customer groups with customer group transparency established. The dialed digits of an outgoing call are echoed in the bottom display line.

Enhanced EBS Reason Display (continued)

The display of an outgoing call to 1-416-555-2468 through an internal trunk with a trunk CLLI name of TORONTO appears in the following figure.

Outgoing call to an internal trunk

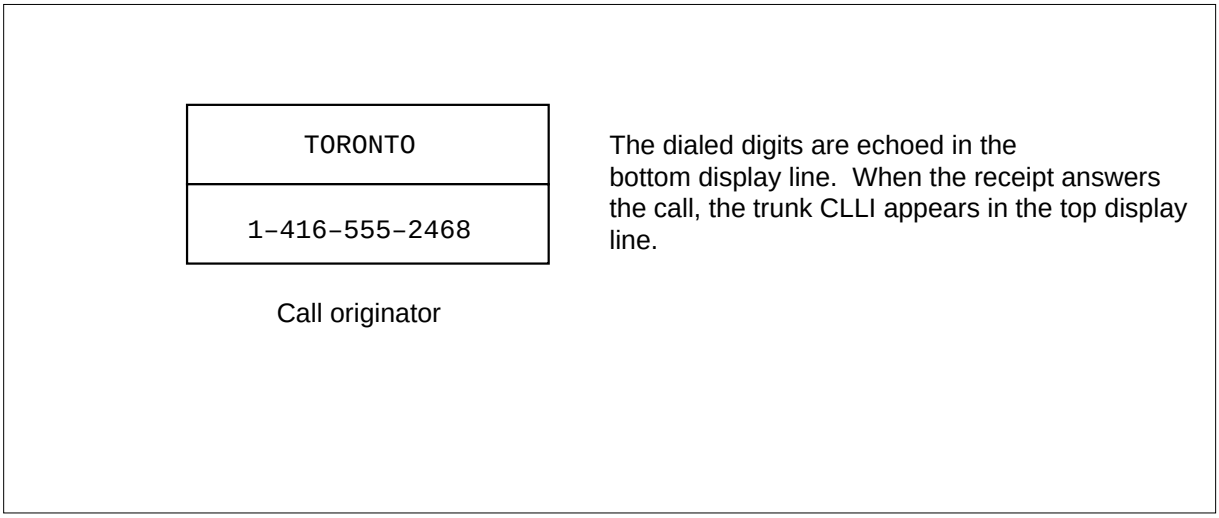

Outgoing external calls

Calls terminating on a line or trunk outside the customer group are external calls. If customer group transparency is established, external calls are calls terminating on a line or trunk outside the customer group family. A message that indicates the call is external is for the display. The default message is OUTSIDE CALL. Enter data in table REASONS to display this message.

The display for an outgoing call to 1-416-555-2468 through an external trunk appears in the following figure. This display occurs with the activation of Enhanced EBS Reason Display feature.

Enhanced EBS Reason Display (continued)

Outgoing call to an external line or trunk

OUTSIDE CALL
1–416–555–2468

Call originator

The dialed digits are echoed in the bottom display line. If the Enhanced EBS Reason Display feature is activated, the external call message is shown in the top display line when the call is answered.

Redirection display

This section describes the reason display messages and display format for the following features:

- Call Forward (CFU, CFI, CFB, and CFD)
- Call Pickup (CPU, DCPU, and DCBI)
- Call Park (CPRK and DCPK)
- Conference (station-controlled, meet-me, preset, and attendant)
- Three-Way Calling (3WC)

Call forward universal and intragroup

Call forward universal (CFU) and call forward intragroup (CFI) are programmable features used to redirect calls to a different DN. These features have the following display format:

- The following condition applies for all types of call forwarding. The DN of the intended call terminator, base station, is on the displays of the call originator and call terminator.
- The actual call terminator appears in the top display line.
- The call forward reason and the intended call terminator, base station, appears in the bottom display line.
- The default reason message for CFU and CFI is FORWARD for the originator and CALL FWD for the terminator. Enter data in table REASONS to change each of these messages.

Enhanced EBS Reason Display (continued)

A CFU situation where extension 1111 calls extension 2222 appears in the following figure. The programmed extension 2222 has call forward universal to extension 3333.

Call forward universal display formats

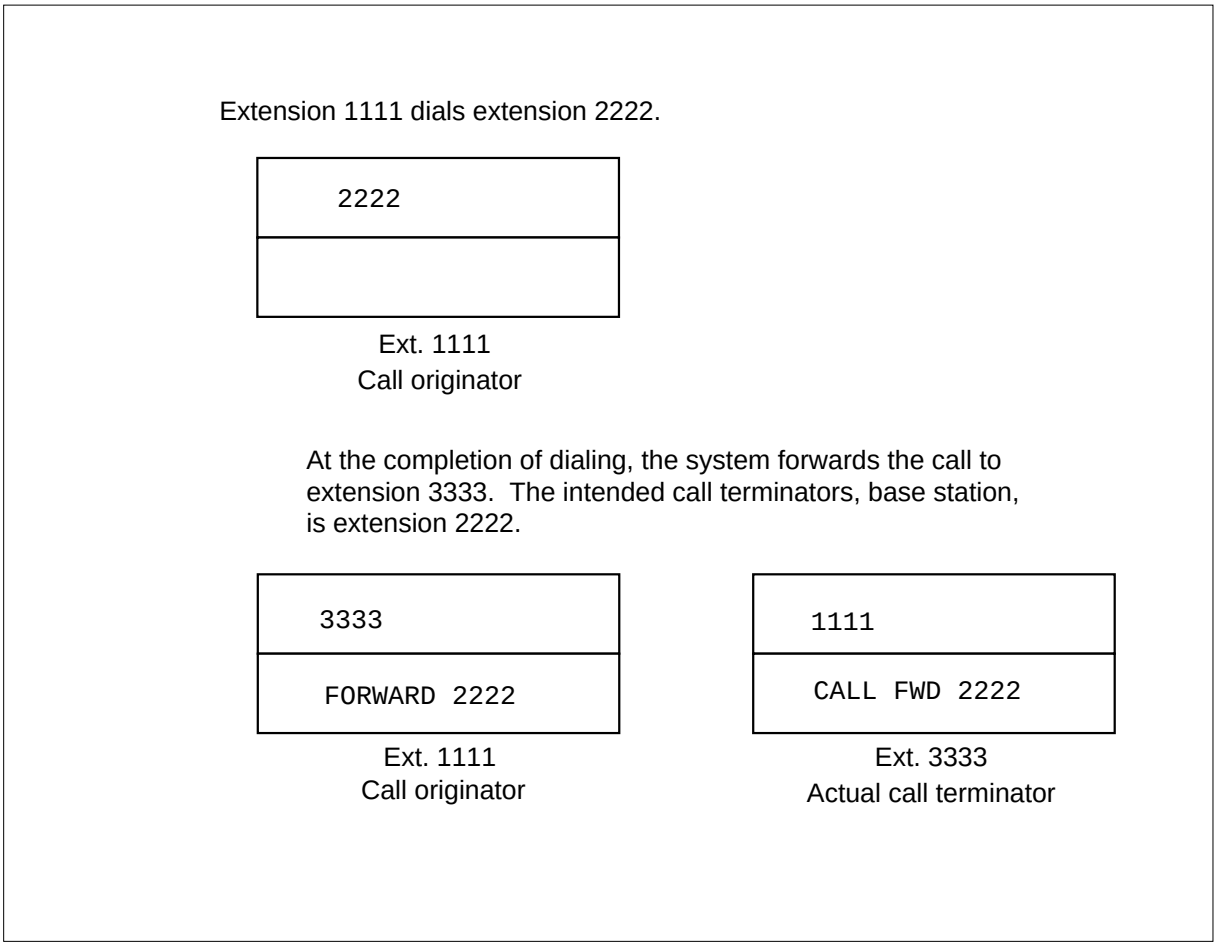

Note: Both the call forward reason message and the intended call terminator appear in this example. If the entered reason message is 15 characters long, the DN of the intended call terminator does not appear. A 2-line by 16-character display does not have enough space.

Enhanced EBS Reason Display (continued)

Call forward busy

The system activates call forward busy (CFB) when the display set with this option engages in a call and an incoming call arrives. This feature has the following display format:

- The actual call terminator appears in the top display line.
- The call forward reason and the intended call terminator, base station, appears in the bottom display line.
- The default reason message for CFB is FORWARD for the originator and BUSY FWD for the terminator. Enter data in table REASONS to change these reason messages.

A CFB situation, where extension 1111 calls extension 2222, appears in the following figure. Extension 2222, engaged in a call, is programmed with call forward busy to extension 3333.

Enhanced EBS Reason Display (continued)

Call forward busy display formats

Extension 1111 dials extension 2222. Extension 2222 is in a call and has been programmed with CFB to extension 3333.

2222

Ext. 1111
Call originator

At the completion of dialing, the system forwards the call to extension 3333. The intended call terminator, base station, is extension 2222.

3333
FORWARD 2222

Ext. 1111
Call originator

1111
BUSY FWD 2222

Ext. 3333
Call terminator

Call forward don't answer

The system activates call forward don't answer (CFD) when a party with this option does not answer in a predefined time period. This feature has the following display format:

- The actual call terminator appears in the top display line.
- The call forward reason and intended call terminator, base station, appears in the bottom display line.
- The default reason message for CFD is FORWARD for the originator and NO ANS FWD for the terminator. Enter data in table REASONS to change these messages.

Enhanced EBS Reason Display (continued)

A CFD situation where extension 1111 calls extension 2222, which does not answer calls appears in the following figure. Extension 2222 is programmed with call forward don't answer to extension 3333.

Enhanced EBS Reason Display (continued)

Call forward don't answer display formats

Extension 1111 dials extension 2222. The dialed digits are echoed in the bottom display line.

2222

Ext. 1111
Call originator

Extension 2222 rings but a recipient does not answer the call. The system updates the top display line to indicate that extension 2222 rings. Extension 2222 has been programmed with CFD to extension 3333.

2222

Ext. 1111
Call originator

1111

Ext. 2222
Intended call terminator

At CFD time-out, the system forwards the call to extension 3333. The intended call terminator, base station, is extension 2222.

3333
FORWARD 2222

Ext. 1111
Call originator

Ext. 2222
Intended call terminator

1111
NO ANS FWD 2222

Ext. 3333
Call terminator

Enhanced EBS Reason Display (continued)

Call forward chaining

Stations with CFU, CFB, or CFD can form a series of call forwards known as a call forward chain. The maximum number of stations involved in a call forward chain is five. The system updates the top display line to reflect the connected party.

A call forward chaining situation, where extension 1111 dials extension 2222, which does not answer calls appears in the following figure. The programmed extension 2222 has call forward don't answer to extension 3333. Extension 3333 engages in a call and is programmed with call forward busy to extension 4444. The programmed extension 4444 has call forward universal to extension 5555.

Call forward chaining display formats

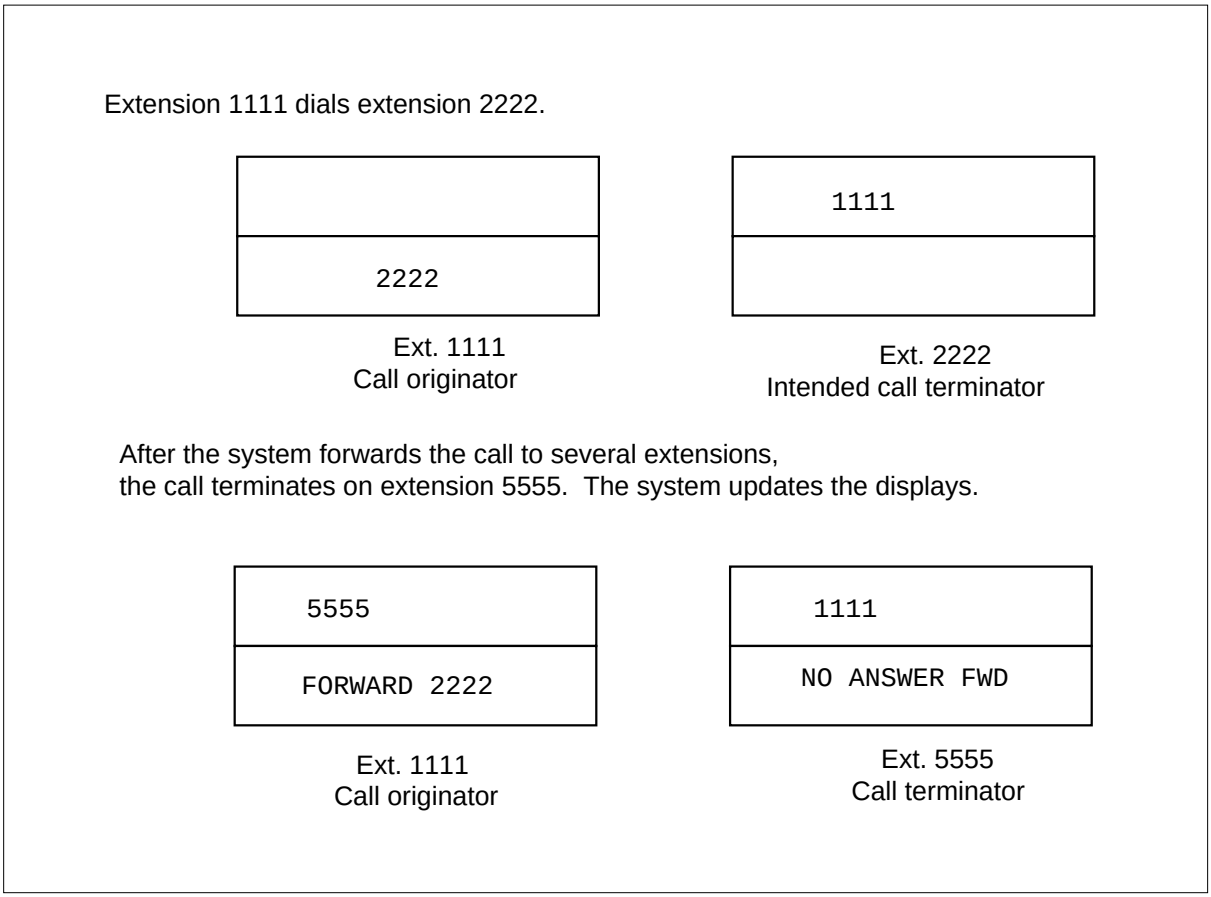

Note: The lower display line of extension 5555 does not have enough space to display the intended call terminator, first base station. Only the first call forward reason message is used. The call originator display updates as the call progresses.

Enhanced EBS Reason Display (continued)

Call pickup (CPU, DCPU, DCBI)

Reason display supports the following types of call pickup:

- Call pickup (CPU) is a feature key or access code feature. The CPU allows any end user in a predefined call pickup group to answer incoming calls for any station in the group.
- Directed call pickup (DCPU) allows any end user in a predefined call pickup group to answer incoming calls for any station in the group. This feature does not allow another end user to cut in on the call when a recipient answers the call.
- Directed call pickup with barge-in (DCBI) allows the end user to cut in on a call that the called party answered already.

Display messages indicate that a recipient answered the call. The messages follow:

- The default message for the party that picks up the call is PICKUP. Enter data in table REASONS to change this message.
- The default message for the party that is picked up is PICKED UP. Enter data in table REASONS to change this message.

A call pickup situation appears in the following figure. In this situation, extension 1111 dials extension 2222, but extension 3333 picks up the call using an access code.

Enhanced EBS Reason Display (continued)

Call pickup display formats

Extension 1111 dials extension 2222.

2222

Ext. 1111
Call originator

Extension 3333 picks up the call using the access code 80.

1111		
2222		80
Ext. 1111 Call originator	Ext. 2222 Intended call terminator	Ext. 3333 Call terminator

The system updates displays to reflect the respective connected parties.

3333		1111
PICKED UP 2222		PICKUP 2222
Ext. 1111 Call originator	Ext. 2222 Intended call terminator	Ext. 3333 Call terminator

Note: The reason message overwrites the echoed dialed digits.

Enhanced EBS Reason Display (continued)

Call park

Call park (PRK) is a feature key or access code feature. Call park allows one station, DN, to place a call on hold and another station (DN) to retrieve a call. If the call park timer expires, the parked call acts like a normal incoming call. The recall indication message CPK RECALL appears on the bottom display line.

If the PRK retrieve access code retrieves the call, the access code digits are echoed on the bottom display line. Normal connected party display is provided.

A PRK recall situation appears in the following figure. Extension 2222 retrieves extension 1111 by using an access code and the extension against which the call was parked.

Call park display formats

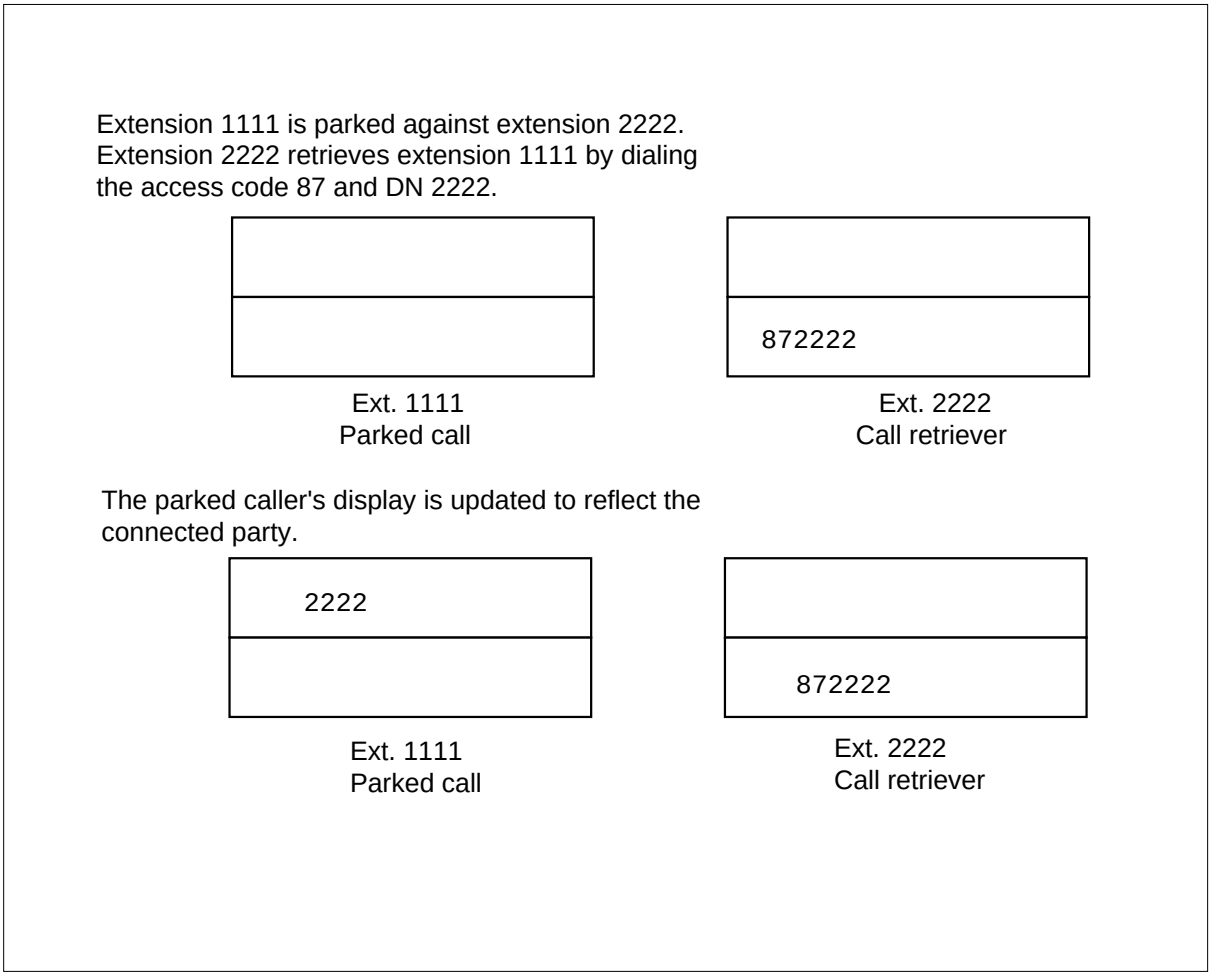

Enhanced EBS Reason Display (continued)

Conference

Enhanced EBS Reason Display supports the following types of conference calls:

- station-controlled conference
- meet-me conference
- preset conference
- attendant conference

One party calling a series of parties establishes station-controlled conference. Each party has normal call display until the conference call is set up. A message on the top display line of all conferee display sets indicates that a conference call is in progress. The default message is CONFERENCE. Enter data in table REASONS to change this message.

Meet-me conference allows all parties to call a meet-me DN to join a conference. A message on the top display line of all conferee display sets indicates that a conference call is in progress. The default message is CONFERENCE. Enter data in table REASONS to change this message.

One party that dials a preset DN establishes preset conference. The system automatically calls the other parties of the conference according to a predefined DN list. To the other parties of the conference, this call arrangement appears to be a normal incoming call. With a set up conference call, a message on the top display line of all conferee display sets indicates that a conference call is in progress. The default message is CONFERENCE. Enter data in Table REASONS to change this message.

The attendant console operator controls the attendant conference. The attendant establishes the conference call. The attendant can hold the conference call if a member requires assistance. The attendant is not part of the conference, or floated, released from the attendant. For each party, the incoming call from the attendant displays the attendant short CLLI. With a set up conference call, the following event occurs. A message on the top display line of all conferee display sets indicates that a conference call is in progress. The default message is CONFERENCE. Enter data in Table REASONS to change this message.

Three-way call/call transfer

When a two-way call is engaged, the end user can press the three-way calling/call transfer (3WC/CT) key. The end user presses the key to attempt to initiate a three-way call. If the key press is allowed, the display clears for digit collection. The active call is held. If the 3WC/CT key press is not allowed, the key press does not affect the display of the call.

Enhanced EBS Reason Display (continued)

When in a digit collection state, all dialed digits appear. If the end user flip-flops between parties, information about the active party appears. With a set up conference call, the default message CONFERENCE appears in all conferee display sets. Enter data in Table REASONS to display this message.

If the controller releases while in a consult state with either party, the system drops that party. The other party remains on hold on the original DN. The reaccess of this DN causes this DN information to appear. If DN release occurs during a conference, the system transfers or takes down the call.

When a display set is the terminator of the second leg of a three-way call, the following condition occurs. The controller information appears until the conference call is set up. When the controller releasing transfers the call, the DN or CLLI of the remaining party appears in the updated display.

When a display set is the other party of the first leg of a three-way call, originator or terminator, the following occurs. The display remains like in the initial call until a conference call is set up. If the system transfers the call, the system updates the display. The DN or CLLI of the new terminator appears in the updated display.

The caller can dial the attendant, directly or indirectly, as the second leg of a three-way call. When the attendant answers, the attendant takes control of the conference and brings in the held party. The CLLI of the attendant appears in the displays of the original two parties.

Different display conditions during a three-way call appear in the following figure.

Enhanced EBS Reason Display (continued)

Three-way call/call transfer displays

For the first leg of the call, extension 1111 dials extension 2222.

	1111
2222	
Ext. 1111 Call originator	Ext. 2222 Call terminator

For the second leg of the call, extension 2222 places extension 1111 on hold and then dials extension 3333.

2222	3333	2222
Ext. 1111 Held party	Ext. 2222 3WC controller	Ext. 3333 New terminator

Extension 2222 flips from extension 3333 to extension 1111.

	1111	2222
2222		
Ext. 1111 Reaccessed party	Ext. 2222 3WC controller	Ext. 3333 Held party

Extension 2222 flops back to extension 3333 from extension 1111.

		2222
2222	3333	
Ext. 1111 Held party	Ext. 2222 3WC controller	Ext. 3333 Reaccessed party

Enhanced EBS Reason Display (continued)

Three-way call/call transfer displays (continued)

Extension 2222 initiates a conference between the three parties.

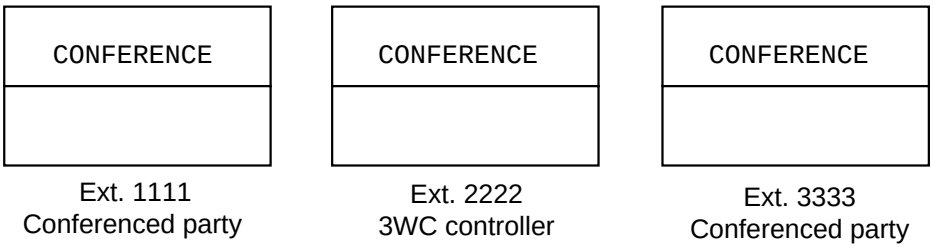

Extension 2222 releases while in conference. This action transfers extension 1111 to extension 3333.

Display for other call situations

For held calls, the system retains the reason message for display when the call is reaccessed and the system updates the display set screen. For abandoned or exited calls, the display is cleared when the call ends. Outgoing calls terminating to treatment do not receive with a reason message.

User interface

Enhanced EBS Reason Display does not affect user interface.

Enhanced EBS Reason Display (continued)

Translations table flow

The Enhanced EBS Reason Display translations tables appear in the following list:

- Table REASONS (Business Set Reason Display) contains displays of feature and call progress information messages on an MBS with display.
- Table CUSTSTN (Customer Group Station Option) contains the station options assigned to each customer group. For an MBS to display a call transfer recall message, the customer group must be assigned option REASDISP in Table CUSTSTN.

The Enhanced EBS Reason Display translation process appears in the following flowchart. The translation flow to assign Enhanced EBS Reason Display to an MBS or 500/2500 set appears in the flowchart and data.

Enhanced EBS Reason Display (continued)

Table flow for Enhanced EBS Reason Display

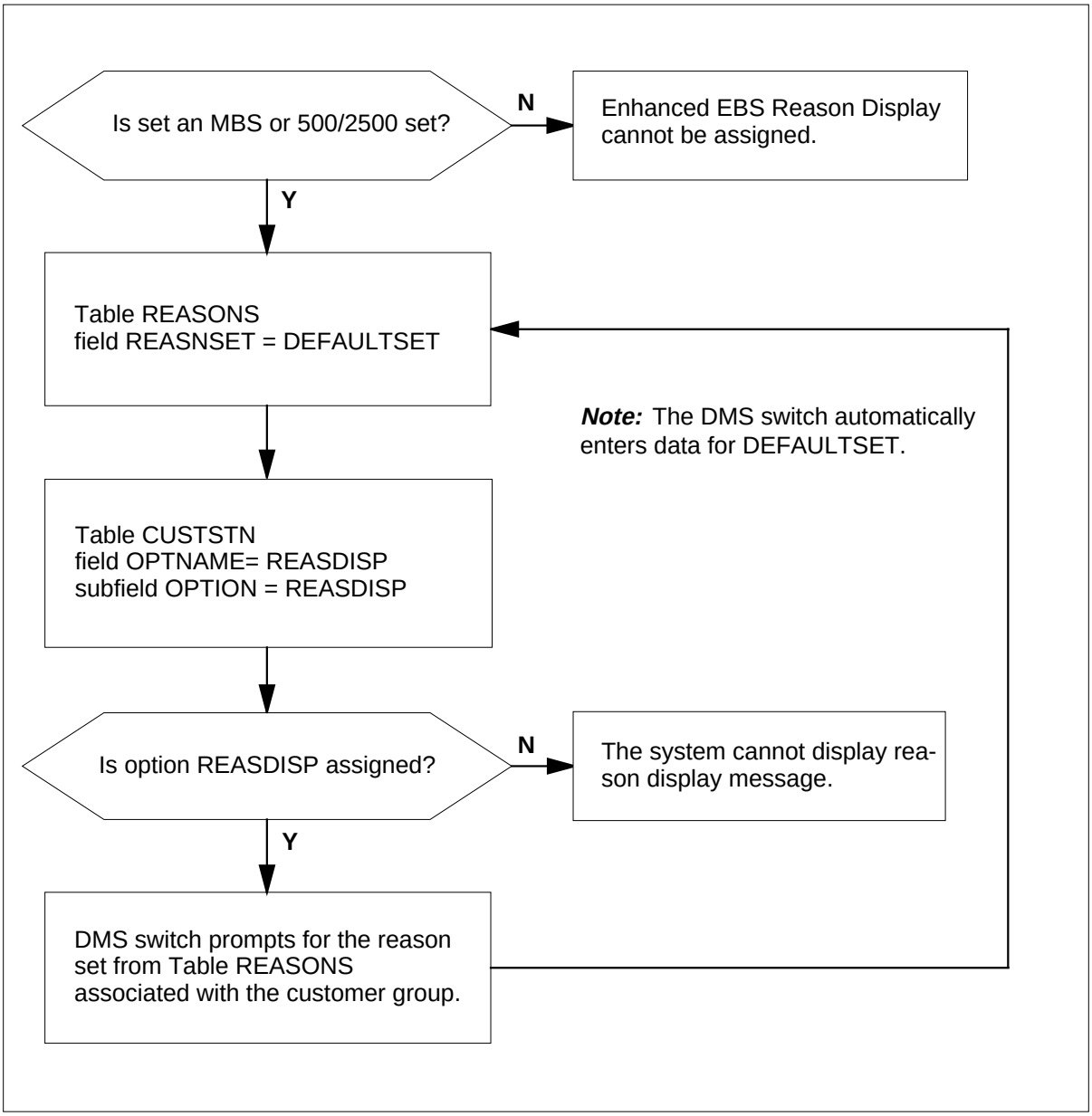

Enhanced EBS Reason Display (continued)

Datafill content used in the flowchart appears in the following table.

Datafill example for Enhanced EBS Reason Display

Datafill table	Example data
REASONS	DEFAULTSET TERMCRUMSG PICKUP
CUSTSTN	MDCGRP1. REASDISP, REASDISP, DEFAULTSET
	MDCGRP2, REASDISP, REASDISP, SET1
	MDCGRP3, REASDISP, REASDISP, SET2

Limits

The following limits apply to Enhanced EBS Reason Display:

- Enhanced EBS Reason Display provides reason display information for calls in and between customer groups on the same DMS-100 switch.
- Reason display information is not provided for calls terminating to treatment.
- The length of the display limits the amount of information displayed. If the reason information and the redirecting DN do not fit on the bottom line of the display, the following condition occurs. Only the reason information appears. The data entry of reasons remains short so that the redirecting DN can display.

Interactions

Enhanced EBS Reason Display does not have functionality interactions.

Activation/deactivation by the end user

Enhanced EBS Reason Display does not require activation or deactivation by the end user.

Billing

Enhanced EBS Reason Display does not affect billing.

Station Message Detail Recording

Enhanced EBS Reason Display does not affect Station Message Detail Recording.

Datafilling office parameters

The following paragraphs describe the datafill procedure for office parameter KSET_INTER_GRP_DISP.

Enhanced EBS Reason Display (continued)

The office parameter KSET_INTER_GRP_DISP specifies if calls that arrive from outside the customer group are allowed to have information displayed. Set this office parameter to Y if inter-customer group display is allowed. Calls from outside the customer group or customer group family have their DN or trunk CLLI displayed instead. This display replaces the OUTSIDE CALL message.

Office parameters used by Enhanced EBS Reason Display appear in the following table. For more information about office parameters, refer to *Office Parameters Reference Manual*.

Office parameters by Enhanced EBS Reason Display

Table name	Parameter name	Explanation and action
OFCENG	KSET_INTER_GRP_DISP	Specifies if information on calls that arrive from outside the customer group appears on the display set of the terminator. Enter Y or N. The default value is N.

Datafill sequence

Datafill to implement Enhanced EBS Reason Display appears in the following table. The tables appear in the correct entry order.

Datafill requirements for Enhanced EBS Reason Display

Table	Purpose of table
REASONS	Business Set Reason Display. This table contains a default set of reasons and associated display messages.
CUSTSTN	Customer Group Station Option. This table contains the station options assigned to each customer group.

Datafilling table REASONS

Table REASONS (Business Set Reason Display) contains a default set of reasons and associated display messages. The default reason set is DEFAULTSET. The DMS switch enters data for DEFAULTSET. Table REASONS requires datafill if the customer group wants display messages other than the messages provided by DEFAULTSET.

The customer group must have option REASDISP in Table CUSTSTN (Customer Group Station Option) assigned for a business set to display reason messages. When assignment of option REASDISP occurs, the DMS switch prompts for the reason set from Table REASONS associated with the customer group.

Enhanced EBS Reason Display (continued)

Table REASONS replaces Table KSETMSGS (Keyset Messages), which stored the messages for the Call Forward Reason Display feature. Enhanced EBS Reason Display replaces the Call Forward Reason Display feature (AD0414). Option REASDISP replaces option KSMSGS.

Datafill for Enhanced EBS Reason Display for table REASONS appears in the following table. The fields that apply directly to Enhanced EBS Reason Display appear in this table. See the data schema section of this document for a description of the other fields.

Datafilling table REASONS

Field	Subfield or refinement	Entry	Explanation and action
REASNSET		1- to 16-character alphanumeric name	Reason Set. This field specifies the 1- to 16-character alphanumeric name of the reason set. Enter the reason set name. The default is DEFAULTSET.
REASONID		reason name	Reason Identification. This field specifies the name of the reason. Enter the reason to correspond to the type of call.
MESSAGE		1 to 15 character message	Displayed Message. This field specifies a descriptive message for the programmed option. Enter a message. Messages can contain a maximum of 15 characters.

Datafill example for table REASONS

Table REASONS entered with three reason sets: DEFAULTSET, SET1, and SET2, appears in the following example. The DMS switch adds DEFAULTSET.

Enhanced EBS Reason Display (continued)

MAP example for table REASONS

```
   REASNSET         REASONID            MESSAGE
-------------------------------------------------------
  DEFAULTSET       UNKNOWNMSG          NO_CALL_INFO
  DEFAULTSET      EXTERNALMSG          OUTSIDE_CALL
  DEFAULTSET          CONFMSG            CONFERENCE
  DEFAULTSET       BARGEINMSG              BARGE_IN
  DEFAULTSET       TERMCFUMSG              CALL_FWD
  DEFAULTSET       TERMCFDMSG            NO_ANS_FWD
  DEFAULTSET       TERMCFBMSG              BUSY_FWD
  DEFAULTSET       ORIGFWDMSG               FORWARD
  DEFAULTSET       TERMCPUMSG                PICKUP
  DEFAULTSET          CPKRMSG           PARK_RECALL
  DEFAULTSET          CXRRMSG          TRANSFER_RCL
  DEFAULTSET       ORIGCPUMSG             PICKED_UP
  SET1            EXTERNALMSG                   EX
  SET1             UNKNOWNMSG               NO_INFO
  SET1                CONFMSG                CONFER
  SET1             TERMCFDMSG                   FWD
  SET1             TERMCFUMSG                   FWD
  SET2            EXTERNALMSG               OUTSIDE
```

Datafilling table CUSTSTN

Table CUSTSTN (Customer Group Station Option) contains the station options assigned to each customer group. For a business set to display reason messages, the customer group must have assigned option REASDISP in Table CUSTSTN. When assignment of option REASDISP occurs, the DMS switch prompts for the reason set from Table REASONS associated with the customer group.

Datafill for Enhanced EBS Reason Display for table CUSTSTN appears in the following table. The fields that apply to Enhanced EBS Reason Display

Enhanced EBS Reason Display (continued)

appear in this table. See the data schema section of this document for a description of the other fields.

Datafilling tableCUSTSTN

Field	Subfield or refinement	Entry	Explanation and action
CUSTNAME		customer group name	Customer Group Name. This field specifies the 1 to 16-character alphanumeric name assigned to the customer group. Enter the customer group name.
OPTNAME		REASDISP	Option Name. This field specifies the name of the option. Enter REASDISP.
OPTION		see subfield	Option. This field contains subfield OPTION.
	OPTION	REASDISP	Option. This subfield specifies the name of the option. Enter REASDISP.
With the OPTION setting at REASDISP, subfield REASTYPE requires datafill.			
	REASTYPE	1- to 16-character alphanumeric reason set name	Reason Type. This subfield specifies the 1-to16-character alphanumeric reason set name assigned in field REASNSET in Table REASONS. Enter the name of a reason set from Table REASONS. To use the default set of display messages, enter DEFAULTSET.

Datafill example for table CUSTSTN

Sample datafill for Table CUSTSTN with option REASDISP entered appears in the following example. The customer group MDCGRP1 has option REASDISP assigned. The reason set from Table REASONS used is DEFAULTSET. The second customer group, MDCGRP2, also has option REASDISP. This customer group uses the display messages in reason set SET1. The third customer group, MDCGRP3, has option REASDISP and uses the display messages in reason set SET2.

Enhanced EBS Reason Display (end)

MAP example for table CUSTSTN

```
   CUSTNAME     OPTNAME                                OPTION
------------------------------------------------------------
   MDCGRP1      REASDISP      REASDISP            DEFAULTSET
   MDCGRP2      REASDISP      REASDISP                  SET1
   MDCGRP3      REASDISP      REASDISP                  SET2
```

Tools for verifying translations

Enhanced EBS Reason Display does not use tools for verifying translations.

SERVORD

Enhanced EBS Reason Display does not use SERVORD.

Executive Msg Service Enhancement - Multi EMW per DN

Ordering codes

Functional group ordering code: MDC00007

Functionality ordering code: does not apply

Release applicability

BCS30 and later versions

Requirements

To operate, Executive Message Service Enhancement-Multi EMW per DN has the following requirements:

- BAS Generic, BAS00003
- MDC Minimum, MDC00001
- MDC Standard, MDC00003

Description

Executive Message Service Enhancement - Multi Executive Message Waiting (EMW) per DN enhances basic message service through a DMS-100 office. The feature allows a maximum of four message waiting class of service (MCOS) groups to be assigned to each directory number (DN) on an Meridian business set (MBS).

Each MCOS can have a separate Message Waiting (MWT) key and an associated message waiting indicator (MWI), or a group of MCOSs can link to the same MWT key. You can allocate multiple MWIs to each DN. Each multiple MWI associates with a specified MCOS.

Executive Message Service Enhancement - Multi EMW per DN enhances the basic Executive Message Waiting EMW feature. This enhancement allows the assignment of more than one EMW key on an MBS. One application of this enhancement is to designate voice mail to one key and an MDC message desk to another key. This designation occurs on an MBS. This designation allows an MBS end user to distinguish messages.

Operation

An MBS end user can normally assign voice mail to one MWT key and a MDC message desk to another MWT key. This action separates the two types of messages. An MBS end user can configure the set so that each priority message has separate indicators.

Executive Msg Service Enhancement - Multi EMW per DN (continued)

Executive Message Service Enhancement - Multi EMW per DN also allows a separate MCOS to be assigned to a simplified message desk interface (SMDI). This feature allows a separate key and lamp pair to be set up. An SMDI uniform call distribution (UCD) group can specify a list of MCOSs that the system supports.

Translations table flow

Executive Message Service Enhancement - Multi EMW per DN does not affect translations table flow.

Limits

The following limits apply to Executive Msg Service Enhancement - Multi EMW per DN:

- Each DN can subscribe to a maximum of four different MCOSs. The 16 MCOSs are from ClassA to ClassP.
- Each DN can have a maximum of 15 messages in queue against each DN at any time.
- Different DNs cannot share a single MWT key and lamp pairs. A minimum of two MWT key and lamp pairs are a requirement when two DNs have MWT assigned. This condition applies when the DNs subscribe to the same MCOS.
- You can group messages from an SMDI UCD group in a different MCOS. For this condition to occur, the UCD group and end user must reside in the same switch.
- Messages from an SMDI UCD group that reside in another switch are in MCOS ClassP.

Interactions

The following paragraphs describe the actions between Executive Msg Service Enhancement - Multi EMW per DN and other functionalities.

Message Service-Message List Editing

During a Message Service-Message List Editing session, the system presents messages that belong to the associated DN to an MBS end user. These messages must have the MCOS in the active MWT key. Message Service-Message List Editing requires an MBS with display.

Key Access for Message Waiting Indication

All messages that originate from the Key Access for Message Waiting Indication feature have a MCOS ClassP type. The system does not provide MCOS information across the network.

Executive Msg Service Enhancement - Multi EMW per DN (continued)

Executive Message Waiting Service

Executive Message Service Enhancement - Multi EMW per DN allows the end user to assign more than one EMW key on an MBS. The end user uses the Executive Message Waiting Service feature. The end user can designate voice mail to one key and an MDC message desk to another key on an MBS. This condition allows the end user to distinguish messages from one or the other easily.

Activation/deactivation by the end user

Executive Msg Service Enhancement - Multi EMW per DN does not require activation or deactivation by the end user.

Billing

Executive Msg Service Enhancement - Multi EMW per DN does not affect billing.

Station Message Detail Recording

Executive Msg Service Enhancement - Multi EMW per DN does not affect Station Message Detail Recording.

Datafilling office parameters

Executive Msg Service Enhancement - Multi EMW per DN does not affect office parameters.

Datafill sequence

The tables that require datafill to implement Executive Msg Service Enhancement - Multi EMW per DN appears in the following table. The tables appear in the correct entry order.

Datafill requirement for Executive Msg Service Enhancement - Multi EMW per DN

Table	Purpose of table
UCDGRP	Uniform Call Distribution Group. This table changes to allow option UCD_SMDI to accept a maximum of four different MCOSs. The SMDI UCD group supports these MCOs.

Datafilling table UCDGRP

Table UCDGRP (Uniform Call Distribution Group) changes to allow option UCD_SMDI to accept a maximum of four different MCOSs. The SMDI UCD group supports these MCOSs. If you select option UCD_SMDI, each member of the UCD group acting as the message desk must have option UCD_SMDI.

Executive Msg Service Enhancement - Multi EMW per DN (continued)

Datafill for Executive Msg Service Enhancement - Multi EMW per DN for table UCDGRP. The fields that apply to Executive Msg Service Enhancement - Multi EMW per DN appear in this table. See the data schema section of this document for a description of the other fields.

Datafilling table UCDGRP

Field	Subfield or refinement	Entry	Explanation and action
OPTIONS		UCD_SMDI	Options. This field specifies the options and associated subfields that are assigned to the UCD group. Enter UCD_SMDI.
If OPTIONS contains UCD_SMDI, subfields SMDI_LINK, SMDI_DESK_NO, and MCOS_LIST require datafill.			
	SMDI_LINK	alphanumeric terminal designation	Terminal Designation. This subfield specifies the terminal designation defined in table TERMDEV (Terminal Device). Enter the alphanumeric terminal desigination.
	SMDI_DESK _NO	1 to 63	SMDI Desk Number. This subfield specifies the SMDI desk number. Enter a value from 1 to 63.
	MCOS_LIST	one to four MCOSs from ClassA to ClassP	Message Class of Service. This subfield specifies the MCOS assigned to the UCD group. Enter a maximum of four MCOSs from ClassA to ClassP.

Datafill example for table UCDGRP

Sample datafill for table UCDGRP appears in the following example. Datafill for a UCD group that provides SMDI service to end users in MCOSs ClassA, ClassB, ClassC, and ClassP appears in the following example.

MAP example for table UCDGRP

```
TABLE: UCDGRP
UCDNAME   ACD  CUSTGRP  UCDRNGTH  THROUTE   NSROUTE
PRIOPRO MAXPOS DBG DEFPRIO RLSCNT MAXWAIT MAXCQSIZ
OPTIONS
---------------------------------------------------------
UCDGRP1   N   MDCGRP1    10     OFRT 1000   OFRT 1000
  1        5     N     2      5     10       5
(UCD_SMDI SMD11 63 (CLASSA) (CLASSB) (CLASSC) (CLASSP) $)
$
```

Executive Msg Service Enhancement - Multi EMW per DN (end)

Tools for verifying translations

Executive Msg Service Enhancement - Multi EMW per DN does not use tools for verifying translations.

SERVORD

Executive Msg Service Enhancement - Multi EMW per DN does not use SERVORD.

M5209 Introduction

Ordering codes

Functional group ordering code: MDC00007

Functionality ordering code: does not apply

Release applicability

BCS24 and later versions

Requirements

To operate, M5209 Introduction has the following requirements:

- BAS Generic, BAS00003
- MDC MBS Minimum, MDC00007

Description

The M5209 Introduction provides table control, service orders, maintenance, and call processing support for Meridian sets M5209 and M5312. The addition of these two new sets to the Meridian M5000 series of Meridian business sets (MBS) occurs. Previous members of the M5000 series are M5009 and M5112.

The M5209 set is a nine-button MBS with a built-in display module. The M5312 set is a 12-button hands-free MBS with built-in display. The old M5009 and M5112 sets have 9 and 12 buttons, in the order given. The main improvement of the M5209 and M5312 over the M5009 and M5112 is the built-in display module enhancement to the basic MBS.

The current display has a larger screen, which contains 2 lines by 24 characters. This size compares to the previous size of 2 lines by 16 characters. The current display offers the same display functions as the basic MBS with display. The current display offers improvements because of the larger screen size.

M5209 Introduction (continued)

Operation

An MBS with display has the following advantages over an MBS without display:

- at call placing—visual feedback on dialed digits, and display of any redirected destination directory number (DN), like Call Forward or Call Pickup.
- at call receiving—incoming DN, trunk, or attendant ID display, and display of any original intended destination DN. Examples of this DN include Call Forward and Call Pickup.
- during feature operation/programming—visual feedback of dialed digits, stored DNs, or other information like date/time. Examples of stored DNs are speed call. auto dials. and last number redial.

The lower line on the screen displays dialed digits, and the upper line displays incoming DN and other call information.

Other characteristics of M5209 and M5312 sets follow:

- The M5209 set can support earlier features of the basic MBS with display.
- The M5209 set has a lamp for each of the nine feature keys. The assignment of each lamp/key to a feature, like CWT and 3WC, can occur. The other nine-button sets, the basic MBS and the M5009, have only one lamp for keys one through right.
- The M5209 set requires local power for the display unit and lamp number 9 to function. If local power failure occurs, the rest of the set continues to function. The parts of the set that continue to function include the key/lamp pairs 1 through 8, and key 9. Lamp 9 does not operate.
- The M5312 set can support earlier features of the basic MBS with display and hands-free.
- The new M5312 set and the old M5112 set each have 12 buttons and 10 feature/DN keys. Key 11 is for microphone mute/unmute, and key 12 is reserved for hands-free activation. Each of the ten feature/DN keys has a separate lamp.
- The M5312 set requires local power for the display unit, the hands-free unit, lamp 9, and lamp 10 to function. If local power failure occurs, the rest of the set continues to function. The parts of the set that continue to function include key/lamp pairs 1 through 8 and keys 9 and 10. Lamps 9 and 10 do not operate.
- The M5209 and M5312 sets can have a 36-button M536 add-on. The 20-button add-on is not available on the M5000 series.

M5209 Introduction (continued)

Table control support

The modification of table KSETINV (Business Set and Data Unit Inventory) occurs. This table records the loop configuration in terms of add-ons and extension units on the loop. The table uses the ringing profile for the loop in the configuration. The addition of two new set types, KSET_M5209 and KSET_M5312 occurs. This addition occurs to specify the entry of data in the set to table control. Table control allows the entry of the M5209 and M5312 sets in the following tables:

- KSETINV
- KSETFEAT (Business Set and Data Unit Feature)
- KSETLINE (Business Set and Data Unit Line Assignment)

Maintenance support

The same exec lineup as for terminal type KSET supports call processing for all MBS types. The M5209 and M5312 features are integrated in this design. The KSET exec lineup downloads to the line group controller (LGC) at return to service (RTS) time. This action occurs when an M5209 or M5312 set is with the MBSs that the LGC serves.

Terminal types downloaded to the LGC for the M5209 sets are the same as the M5009 sets. Terminal types downloaded to the LGC for the M5312 sets are the same as the M5112 sets. This event occurs because the new sets have characteristics like the M5009 and M5112 sets. The following characteristics are exceptions:

- The M5209 set has an extra lamp, number 9, and a built-in display. The M5009 set does not have a display.
- The M5312 set has a built-in display. The M5112 set does not have a display.

Maintenance support allows the RTS of the M5209 and M5312 sets. The maintenance operating procedure does not change.

Call processing support

The M5209 Introduction feature provides the following call processing support:

- The MBS display software for the M5209 and M5312 sets has the same display functions as the earlier MBS with display.
- Assignment of each of the 1 through 9 keys on the M5209 set can occur to a DN and other features. Assignment of each of the 1 through 10 keys on the M5312 set can occur to a DN and other features.

- The MBS call processing and features extend to cover the M5209 and M5312 sets. This extension is for the larger-size screen on the M5209 and M5312 sets. This extension is for the new lamp, number 9, on the M5209 set. The extension allows call placing/receiving and feature operation, including all display functions, on the M5209 and M5312 sets.
- The end user operating procedure for call placing/receiving and features remain the same as for earlier MBSs. These features include the display features.

Station ringer test support

The standard MBS station ringer test (SRT) is adapted to the M5209 and M5312 sets. The M5209 and M5312 sets are different. Because of this condition, the SRT occurs with the following method:

- *M5209 station ringer test* The operating procedure is the same as for the M5009 set. The exception to the procedure is that the user presses key 9 to light lamp number 9. On the M5009 set, lamps 1 and 8 are lit. Another difference with the M5209 SRT is the local echoing of dialed digits during a dialing test. In local echoing, the lower line of the screen fills. The screen starts to fill at the far left end. The screen continues to fill to the right. The fill continues until the line is full. The next dialed digit causes the lower line to shift left. The far left end digit shifts to the far right end of the upper line. After this event, the upper and lower lines shift left together with each dialed digit. The new digit enters at the far right end of the lower line. The screen loses the far left end character of the upper line with each left shift.

  Refer to the *Integrated Business Network Services Meridian M5009 Basic (9 Button) Business Set Description, Installation and Maintenance*. This publication provides a detailed description of the SRT operating procedure for the M5009 set.

- *M5312 station ringer test* The operating procedure is identical to M5112. The exception is the local echoing of dialed digits. See the preceding paragraph for a description of local echoing.

  Refer to the *Integrated Business Network Services Meridian M5112 Handsfree (12 Button) Business Set Description, Installation, Operation and Maintenance*. This publication provides a detailed description of the SRT operating procedure for M5112.

Translations table flow

The M5209 Introduction does not affect translations table flow.

Limits

The M5209 Introduction does not have limits.

M5209 Introduction (continued)

Interactions

The M5209 Introduction does not have functionality interactions.

Activation/deactivation by the end user

The M5209 Introduction does not require activation or deactivation by the end user.

Billing

The M5209 Introduction does not affect billing.

Station Message Detail Recording

The M5209 Introduction does not affect Station Message Detail Recording.

Datafilling office parameters

There are no required office parameters. In NA007, Software Optionality Control (SOC) MDC00058 replaced office parameter MAX_IBN_LINES. SOC MDC00058 sets the maximum number of Meridian Digital Centrex (MDC) lines in an office.

Datafill sequence

The tables that require datafill to implement M5209 Introduction appear in the following table. The tables appear in the correct entry order.

Datafill requirements for M5209 Introduction

Table	Form
LNINV	2038
KSETINV (Note)	2273A, B
LTCINV	2018A, B
IACINV	6001A, B
RCCINV	2226A, B
XESAINV	2290
Note: Use SERVORD to enter data in this table. Datafill procedure is not available.	

Datafilling table LNINV

Table LNINV (Line Circuit Inventory) contains the data for each line card slot.

Datafill for M5209 Introduction for table LNINV appears in the following table. The fields that apply to M5209 Introduction appear in this table. See the data schema section of this document for a description of the other fields.

Datafilling table LNINV

Field	Subfield	Explanation and action
LEN		Line Equipment Number This field specifies the site, frame, unit, drawer, shelf, slot and circuit number for the line. Enter the LEN.
CARDCODE		Card Code This field specifies the card code. Enter 6X17AC.

Datafill example for table LNINV

Sample datafill for table LNINV appears in the following example.

MAP example for table LNINV

```
TABLE: LNINV

LEN            CARDCODE  PDGRP  STATUS   GND  BNV  MNO  CAR
-------------------------------------------------------------
HOST 00 0 00 00  6X17AC  STDLN  WORKING  N    NL   N   NIL
```

Datafill procedure for table LTCINV

Table LTCINV (Line Trunk Controller Inventory) contains the inventory data for different peripheral module types. Table LTCINV does not contain the P-side link assignment.

M5209 Introduction (continued)

Datafill for table LTCINV for this feature appears in the following procedure. The fields that apply to this feature appear in this table. See the data schema of this document for details on all fields in this table.

Datafilling table LTCINV

Field	Subfield	Explanation and action
EXECTAB		Executive Table This field contains subfields TRMTYPE, EXEC.
	TRMTYPE	Terminal Type This subfield specifies the type of peripheral module terminal in use. Enter M5X09 or M5X12 for Meridian 9 and 12 button sets.
	EXEC	Executive Programs This subfield specifies the set of executive programs required for the peripheral module specified in subfield TRMTYPE. Enter KSETEX.

Datafill example for table LTCINV

Sample datafill for table LTCINV appears in the following example.

MAP example for table LTCINV

```
TABLE: LTCINV

                                EXECTAB
-------------------------------------------------------------
   (KEYSET  KSETEX)    (RMM_TERM  RSMEX) (M5X12  KSETEX)  $
```

Datafill procedure for table IACINV

Table IACINV (ISDN Access Controller Inventory) contains a list of ISDN access controllers (IAC) with entries in the DMS system. This table identifies the IAC locations, the LOAD and EXEC lineups required, and the network link connections.

Datafill for table IACINV for this feature appears in the following procedure. The fields that apply to this feature appear in this table. See the data schema of this document for details on all fields in this table.

Datafilling table IACINV

Field	Subfield	Explanation and action
EXECTAB		Executive Table This field contains subfields TRMTYPE, EXEC.
	TRMTYPE	Terminal Type This subfield specifies the type of peripheral module terminals in use. Enter M5X09 or M5X12 for voice and data lines.
	EXEC	Executive Programs This subfield specifies the set of executive programs required for the peripheral module specified in subfield TRMTYPE. Enter KSETEX.

Datafill example for table IACINV

Sample datafill for table IACINV appears in the following example.

MAP example for table IACINV

```
TABLE: IACINV

                                EXECTAB
-------------------------------------------------------------
    (KEYSET  KSETEX)    (RMM_TERM  RSMEX) (M5X12  KSETEX)  $
```

Datafill procedure for table RCCINV

Table RCCINV (Remote Cluster Controller Inventory) contains the inventory data, except the P-side link assignments, for the RCC.

M5209 Introduction (continued)

Datafill for table RCCINV for this feature appears in the following procedure. The fields that apply to this feature appear in this table. See the data schema of this document for details on all fields in this table.

Datafilling table RCCINV

Field	Subfield	Explanation and action
EXECTAB		Executive Table This field contains subfields TRMTYPE, EXEC.
	TRMTYPE	Terminal Type This subfield specifies the type of peripheral module terminals in use. Enter M5X09 or M5X12 for Meridian 9 and 12 button sets.
	EXEC	Executive Programs This subfield specifies the set of executive programs required for the peripheral module specified in subfield TRMTYPE. Enter KSETEX.

Datafill example for table RCCINV

Sample datafill for table RCCINV appears in the following example.

MAP example for table RCCINV

```
                                        EXECTAB
------------------------------------------------------------
(KEYSET  KSETEX)    (RMM_TERM  RSMEX)       (M5X12 KSETEX) $
```

Datafill procedure for table XESAINV

Table XESAINV (Emergency Stand Alone Inventory) contains information to use to identify emergency stand-alones (ESA) for the new peripherals.

Datafill for table XESAINV for this feature appears in the following procedure. The fields that apply to this feature appear in this table. See the data schema of this document for details on all fields in this table.

Datafilling table XESAINV

Field	Subfield	Explanation and action
EXECTAB		Executive Table This field contains subfields TRMTYPE, EXEC.
	TRMTYPE	Terminal Type This subfield specifies the type of peripheral module terminals in use. Enter M5X09 or M5X12 for voice and data lines.
	EXEC	Executive Programs This subfield specifies the set of executive programs required for the peripheral module specified in subfield TRMTYPE. Enter KSETEX.

Datafill example for table XESAINV

Sample datafill for table XESAINV appears in the following example.

MAP example for table XESAINV

```
TABLE: XESAINV

ESANAME  FRTYPE  FRNO  SHPOS  FLOOR  ROW  FRPOS      LOAD
                                EXECTAB
CSPM  PEC6X45
-------------------------------------------------------------
RCMO     ESA      0    RLCM     1   38     1  A  2  ESA35BY1
                (LMM_TERM  RSMEX)  (M5X12  KSETEX)  $
LCM  0  6X45AF
```

Tools for verifying translations

The M5209 Introduction does not use tools for verifying translations.

SERVORD

Perform all service orders for the M5209 and M5312 sets according to established service orders user interface procedures for all MBSs. The introduction of two LCC values, M5209 and M5312, occurs to specify the type

M5209 Introduction (continued)

of set. The end user can establish service, delete and add options with the following Service Order System (SERVORD) commands for MBSs:

- New (establish service)
- ADO (add option)
- OUT (remove service)
- DEO (delete option)
- EST (establish a hunt or call pickup group)

Service orders for the M5209 and M5312 sets are based on the M5009 and M5112 sets. The following are the SERVORD modifications for the M5209 and M5312:

- You can enter data for an M5209 or M5312 set. In this event, the system automatically equips each M5209 or M5312 set with the DISP (display) option.
- On the M5209 set, the end user can program key 9 to any feature. Key 9 is not only for features without lamps.
- The M5209 and M5312 set screening during service orders for feature availability and compatibility does not always change. This condition does not change in LCC PSET of tables LCCOPT (Line Class Code Option) and OPTOPT (Incompatible Option).

This service order extension allows the datafill and query of the M5209 and M5312 sets for any DMS-100 office. The service order query commands do not change. The two new line class codes, M5209 and M5312, do change.

Service orders

The SERVORD prompts used to assign M5209 Introduction to an M5209 or M5312 set appear in the following table.

SERVORD prompts for M5209 Introduction (Sheet 1 of 2)

Prompt	Valid input	Explanation
DN_OR_LEN	seven-digit DN or LEN	Specifies the seven-digit DN or LEN of the line to change. Enter the DN or LEN.
OPTKEY	1 to 69	Indicates the key on an MBS to which assignment of an option occurs. Enter a value from 1 to 69.
Note: The system enters data in table KSETFEAT when you assign M5209 Introduction with SERVORD.		

SERVORD prompts for M5209 Introduction (Sheet 2 of 2)

Prompt	Valid input	Explanation
OPTION	SCL, ADL	Indicates the name of the option. Enter SCL or ADL.
LISTTYPE	L30, L50, L70	Indicates the length of the list. Enter L30, L50 or L70.
LCC	M5209, M5312	Indicates the line class code of the service you establish, modify or delete. Enter M5209 or M5312.
Note: The system enters data in table KSETFEAT when you assign M5209 Introduction with SERVORD.		

SERVORD example for adding M5209 Introduction

You can use the ADO command to add option SCL to an M5209 or M5312 MBS. This procedure appears in the following SERVORD example.

SERVORD example for M5209 Introduction in prompt mode

```
SO:
>ADO
SONUMBER:    NOW 87 10 10 PM
>
DN_OR_LEN:
>2 1 2 22
OPTKEY:
>7
OPTION:
>SCL
LISTTYPE:
>L30
OPTKEY:
>$
```

SERVORD example for M5209 Introduction in no-prompt mode

```
> ADO  $  2 1 2 22   7  SCL  L30  $
```

M5209 Introduction (continued)

You can use the DEO command to delete option SCL from an M5209 or M5312 MBS. This procedure appears in the following SERVORD example.

Deleting option SCL from a M5209 or M5312 MBS using SERVORD

```
SO:
>DEO
SONUMBER:    NOW 87 10 10 PM
>
DN_OR_LEN:
>2 1 2 22
OPTKEY:
>7
OPTION:
>SCL
OPTKEY:
>$
```

Deleting option SCL from a M5209 or M5312 MBS in no-prompt mode

```
>DEO $ 2 1 2 22 7 SCL $
```

You can use the EST command to establish a hunt or call pickup group for an M5312. This procedure appears in the following SERVORD example.

M5209 Introduction (continued)

Establishing a hunt or call pickup group for a M5312 using SERVORD

```
SO:
>EST
SONUMBER:    NOW 87 10 10 PM
>
GROUPTYPE:
>MPH
PILOT_DN:
>7875127
LCC:
>M5312
GROUP:
>POTSDATA
SUBGRP:
>0
NCOS:
>0
SNPA:
>919
KEY:
>1
LATANAME:
>NILLATA
RINGING:
>Y
PILOT_LEN:
>HOST 01 0 00 09
MPHGRP:
>1
CALLTYPE:
>1
MPHCON:
>2
CONLINE:
>1
MPH_MEM_LEN:
>HOST 0 00 4  3
```

M5209 Introduction (end)

Establishing a hunt or call pickup group for a M5312 using SERVORD

```
OPTKEY:
>1
OPTION:
>SCL
OPTKEY:
>$
GROUPSIZE:
>4
>$
```

Establishing a hunt or call pickup group for a M5312 in no-prompt mode

```
>EST $ MPH 7875127 M5312 POSTSDAT O O 919
  1 NILLATA Y HOST 01 0 00 09 1 1 2 1 HOST 0 00 4 3
  1 SCL $ 4
```

MADN Service Orders

Ordering codes

Functional group ordering code: MDC00007

Functionality ordering code: does not apply

Release applicability

BCS14 and later versions

Requirements

The MADN Service Orders requires the following functional groups to operate:

- BAS Generic, BAS00003
- MDC Minimum, MDC00001

Description

The MADN Service Orders provides service order support for multiple appearance directory number (MADN) activation. The activation of MADN occurs on Meridian Digital Centrex (MDC) and Meridian business set (MBS) lines. The MADN feature is not optional.

Use the Service Order System (SERVORD) commands NEW (establish service) and ADO (add option) to add MADN as an option to lines. Add MADN to MBS and MDC lines. The feature acronym in SERVORD for MADN is MDN option. The ADO command adds the MDN option to current lines. The NEW command creates a new line. You can add the MDN option to the new line.

You cannot remove the MDN option from a line. To remove MDN, you must remove the line completely from service. Use the OUT or remove service command to remove the line from service. The DEO (delete option) command does not allow the removal of the MDN option from a line. This condition is a table control restriction.

Operation

The MADN Service Orders feature provides improvements to SERVORD to configure MADN for MBS and MDC lines. All operation changes appear in the SERVORD procedures and prompts. See “Service orders" in this document for additional information.

MADN Service Orders (continued)

User interface

Use the query directory number (QDN) or query line equipment number (QLEN) command to query the directory number (DN) or line equipment number (LEN) of a MADN line. When you query a MADN line, the information on the MADN line has the same format as the information on a normal line. The type of line that appears is MULTIPLE APPEARANCE DIRECTORY NUMBER. A MADN INFO field contains fields TYPE, PRIMARY, and RING. An IBN TYPE field is present. This field reads MADN. The line information contains a list of all members in the MADN group. The MADN lines are not compatible with UCD, CSDO, hunt groups, and DND. The MADN is not compatible with the hunt group features SHU and RMB.

The activation of the MADN feature affects tables KSETLINE and IBNLINES. Table KSETLINE must not change. Service orders contains the MADN for MBSs. The MADN does not appear in table IBNLINES as an option on the lines that have MADN. The column that previously read STN for a normal MDC station currently reads MDN for a MADN type line.

Translations table flow

The MADN Service Orders translations process appears in the flowchart in the following figure. The assignment of a MDN group through SERVORD appears in the flowchart and data. The table information for 500/2500 sets or MBSs appears in the flowchart and data. The feature acronym in SERVORD for MADN is MDN option.

MADN Service Orders (continued)

Table flow for MADN Service Orders

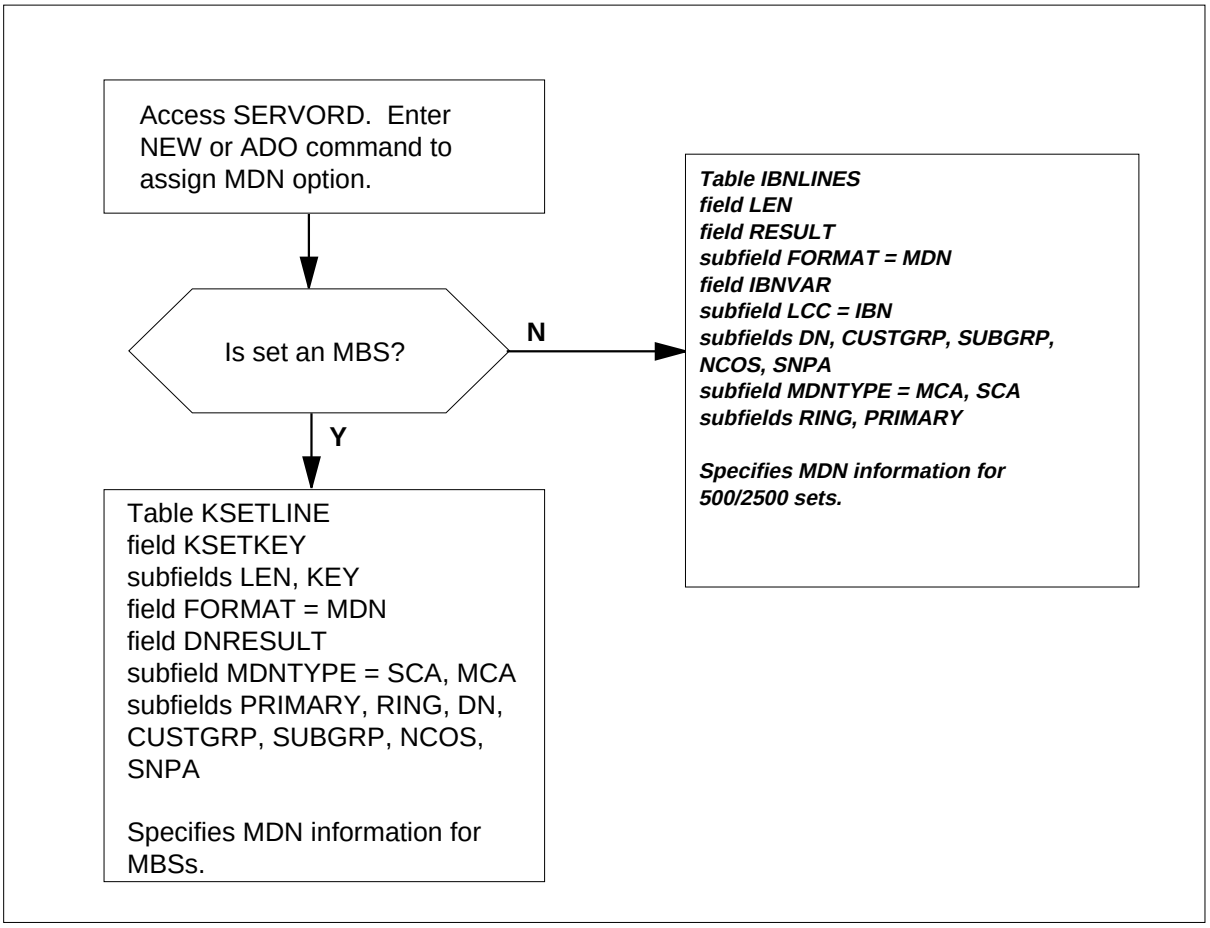

Sample data for MADN Service Orders appears in the following items:

- MADN LEN of MBS - HOST 00 0 08 02
- MADN LEN of 500/2500 - HOST 00 0 05 01.

Datafill for the flowchart appears in the following table.

Datafill example for MADN Service Orders

Datafill table	Example data
KSETLINE	HOST 00 0 08 02 3 MDN SCA Y Y 5554396 MDCGRP1 0 0 919 $
IBNLINES	HOST 00 0 05 01 0 DT MDN IBN 5551816 MDCGRP1 0 0 919 SCA Y Y $

MADN Service Orders (continued)

Limits

The MADN Service Orders does not have limits.

The following limits apply to MADN Service Orders:

- The MADN lines are not compatible with UCD, CSDO, hunt groups, and DND.
- The MADN is not compatible with the hunt group features SHU and RMB.
- You can assign call forwarding only to the line of a primary member.
- You can assign call waiting only to the line of an MCA primary member.

Interactions

The MADN Service Orders does not have functionality interactions.

Activation/deactivation by the end user

The MADN Service Orders does not require activation or deactivation by the end user.

Billing

The MADN Service Orders does not affect billing.

Station Message Detail Recording

The MADN Service Orders does not affect Station Message Detail Recording.

Datafilling office parameters

The MADN Service Orders does not affect office parameters.

Datafill sequence

The tables that require datafill to activate MADN Service Orders appear in the following table. The tables appear in the correct entry order.

> ***Note:*** Use SERVORD to enter data in these tables. A data entry procedure or example is not available. See “SERVORD" for an example of how to use SERVORD to enter data in these tables.

Datafill requirements for MADN Service Orders

Table	Purpose of table
IBNLINES (Note)	IBN Line Assignments Table. This table contains the line assignments for data channel links for the Bulk Calling Line Identification (BCLI) feature. The line assignments have the format name of BL.
KSETLINE (Note)	Business Set And Data-Unit Line Assignment Table. This table contains the directory number appearances for business sets and data units.

Tools for verifying translations

The MADN Service Orders does not use tools for verifying translations.

SERVORD

In the SERVORD environment, the NEW (establish service) command changes to allow the addition of option MDN on a new MDC line. The ADO (add option) command changes to allow the addition of option MDN to a current MDC line. The feature acronym in SERVORD for MADN is MDN. The OUT (remove service) command allows the removal of lines with option MDN. The MDN option assigns a DN to more than one set.

Table IBNLINES

Table IBNLINES (IBN Line Assignment) contains the IBN station numbers, attendant consoles, and MADNs that the switch and the assigned hardware options support. Data entry occurs in this table when the assignment of the line occurs in SERVORD. Data entry occurs in this table when the MDN feature is associated with a 500/2500 set. Subfield MDNTYPE is MCA (multiple call arrangement) or SCA (single call arrangement). Subfields PRIMARY and RING specify if the number is a primary appearance of the MADN group. Subfields PRIMARY and RING specify if ringing applies.

Table KSETLINE

Table KSETLINE (Business Set and Data Unit Line Assignment) contains the business set and data unit numbers that the switch and the assigned hardware options support. Data entry occurs in this table when the assignment of the line occurs in SERVORD. Data entry occurs in this table when the MDN feature

MADN Service Orders (continued)

associates with an MBS. Subfield MDNTYPE is MCA or SCA. Subfields PRIMARY and RING specify if the number is a primary appearance of the MADN group. Subfields PRIMARY and RING specify if ringing applies.

SERVORD limits

The MADN Service Orders feature does not have SERVORD limits.

SERVORD prompts

The SERVORD prompts to assign MADN Service Orders to a current line appear in the following table.

SERVORD prompts for MADN Service Orders (Sheet 1 of 2)

Prompt	Correct input	Explanation
DN_OR_LEN	Correct DN or LEN	Specifies the DN or LEN to which the system adds the option.
OPTION	MDN	Specifies the option to add. Enter MDN.
MDNTYPE	SCA, MCA	Specifies the MADN type. Enter SCA for single call arrangement or MCA for multiple call arrangement.
Note: The system enters data in table KSETLINE or IBNLINES when you assign MADN Service Orders through SERVORD.		

MADN Service Orders (continued)

SERVORD prompts for MADN Service Orders (Sheet 2 of 2)

Prompt	Correct input	Explanation
PRIMARY	Y, N	Specifies if the end user is the primary member of the MADN group. Enter Y or N. ***Note:*** Each MADN group can have one primary line.
RING	Y, N	Specifies if the MADN member has ringing capability. Enter Y or N. When you add MDN to an MBS, the RING prompt appears. You must enter data in this prompt. The MBS can have ringing. This condition determines if the MADN member rings. The entry for the MADN RING prompt does not determine if the MADN member rings. ***Note:*** Due to messaging limitations, DMS users should avoid the following provisioning combination: MADN secondary members, provisioned on MBS Add-on units, with RINGING set to ALWAYS, DELAY, or ABBR. SERVORD will allow this combination for those who require it, but it will also print a warning stating that this combination should have RINGING set to NEVER. The DMS will provide ringing to these sets if provisioned. For situations that require this MADN provisioning combination, DMS users should be careful to minimize messaging for other keys on the set as described in System Engineering Bulletin 92-11-001.
Note: The system enters data in table KSETLINE or IBNLINES when you assign MADN Service Orders through SERVORD.		

SERVORD example for adding MADN Service Orders

The use of the ADO command to add MADN Service Orders to a current line appears in the following SERVORD example.

MADN Service Orders (end)

SERVORD example for MADN Service Orders in prompt mode

```
>
SO:
> ADO
SONUMBER:    NOW 87 10 10 PM
>
DN_OR_LEN:
> 6214444
OPTKEY:
> 1
OPTION:
> MDN
MDNTYPE:
> MCA
PRIMARY:
> Y
RING:
> Y
DIR_NUMBER:
> 6214444
OPTKEY:
> $
```

SERVORD example for MADN Service Orders in no-prompt mode

```
> ADO  $  6214444  1  MDN  MCA  Y  Y  6214444  $
```

MBS II Templates

Ordering codes

Functional group ordering code: MDC00007

Functionality ordering code: does not apply

Release applicability

DMSCCM04 and later versions

Requirements

To operate, MBS II Templates requires the MDC Minimum, MDC00001 functional group.

Description

The MBS II Templates provides functionality support for four Meridian business sets (MBS) and one add-on. These sets are the M5008, M5208, M5216, and M5316 Meridian business sets, and the M522 add-on. These sets are an addition to the Meridian M5000 series of business sets. Previous members of the M5000 series include the M5009, M5209, M5112, and M5312.

Operation

An MBS with display has the following advantages over an MBS without display:

- at call placing, visual feedback on dialed digits, plus display of redirected destination directory numbers (DNs), like Call Forward or Call Pickup
- at call receiving, incoming DN, trunk, or attendant ID display, plus display of any original intended destination DN. An example is Call Forward or Call Pickup
- during feature operation/programming visual feedback of dialed digits, stored DNs (like for speed call, auto dial, or last number redial), or other information (like date/time)

The lower line on the screen displays dialed digits. The upper line displays incoming DN and other call information.

The M5008 MBS has eight feature assignable key/lamp pairs in addition to the standard keys. A handshake unit or an add-on is not available for the M5008.

The M5208 is an enhanced version of the M5008. In addition to the standard keys and the eight feature assignable key/lamp pairs, the M5208 has a built-in display. A handsfree unit or an add-on is not available for the M5208.

MBS II Templates (continued)

The M5216 MBS has 16 key/lamp pairs in addition to the standard keys. The first 11 key/lamp pairs are feature assignable. Keys 12 to 14 are local program keys. As an option, these keys can be in use as feature assignable keys. Keys 15 and 16 are for a local program key and a handset mute key.

The M5216 has a display like the M5208. The M5216 can have a headset and a maximum of two M522 add-ons. Handsfree is not available for the M5216.

The M5316 MBS has 16 key/lamp pairs in addition to the standard keys. The first 13 key/lamp pairs are feature assignable. The following is the designator for keys 14, 15, and 16:

- key 14 is a local program key
- key 15 is a handsfree activation key
- key 16 is a microphone mute/unmute key

The M5316 has a display. The M5316 can have a maximum of two M522 add-ons. A headset is not available for the M5316.

The M522 add-on provides an additional 22 feature assignable keys for use with the M5216 and M5316 Meridian business sets. An addition of a maximum of two of these add-ons can occur. When the use of one M522 add-on occurs, the add-on provides feature assignable keys 15 through 36. When the use of a second add-on occurs, the feature key numbering on the second unit begins with key 37. The feature key numbering continues through key 58.

Translations table flow

The MBS II Templates does not affect translations table flow.

Limits

The following limits apply to MBS II Templates:

- The use of M522 add-on must occur with the M5216 and M5316 Meridian business sets.
- The use of M518 and M536 add-ons can only occur with the M5008, M5208, M5216, or the M5316 Meridian business sets.
- The Automatic Answer Back (AAB) feature is only supported on the M5316 MBS.

Interactions

The Automatic Answer Back (AAB) feature only applies to the M5316. The AAB activates the handsfree unit automatically. This feature allows the called

party to answer the phone without operating a key and lifting the handset. The M5316 is the only phone set that has a handsfree unit in the MBS II templates.

Activation/deactivation by the end user

The MBS II Templates do not require activation or deactivation by the end user.

Billing

The MBS II Templates does not affect billing.

Station Message Detail Recording

The MBS II Templates does not affect Station Message Detail Recording.

Datafilling office parameters

The MBS II Templates does not affect office parameters.

Datafill sequence

The tables that require datafill to implement MBS II Templates appear in the following table. The tables appear in the correct entry order.

Datafill requirements for MBS II Templates

Table	Purpose of table
KSETINV (Note)	Business Set and Data Unit Inventory. This table contains the station options assigned to each customer group.
KSETKEYS (Note)	Business Set Feature Keys. This table defines feature key templates. You can use these templates to assign dedicated keys to business sets that use service order system (SERVORD) commands.
LINEATTR	Line Attribute. This table contains the attributes assigned to a line.
Note: Enter this table through SERVORD. A Datafill procedure or example is not available. See “SERVORD" in this feature description for an example of how to use SERVORD to enter data in this table.	

MBS II Templates (continued)

Datafilling table LINEATTR

The datafill for MBS II Templates for table LINEATTR appears in the following table. The fields that apply to MBS II Templates appear in this table. See the data schema section of this document for a description of the other fields.

Datafilling table LINEATTR

Field	Subfield or refinement	Entry	Explanation and action
LCC		M5008 M5208 M5216 M5316	Line class code. Enter the model number for the MBS assigned to this line.

Datafill example for table LINEATTR

Sample datafill for table LINEATTR appears in the following example.

MAP example for table LINEATTR

```
LNATTIDX  LCC CHGCLSS COST SCRNCL LTG STS PRTNM LCANAME ZEROMPOS TRAFSNO
MRSA    SFC  LATANM  MDI       IXNAME DGCLNAME FANIDIGS
                 RESINF                                OPTIONS
_____________________________________________________________________

     300 M5316   NONE   NT   FR01   0  613 P621    L613     NONE      0
 NIL  NILSFC NILLATA    0  NIL         NIL      00
                     N          AMAGRPID MR_GRP            $
```

Tools for verifying translations

The MBS II Templates does not use tools for verifying translations.

SERVORD

Perform service orders for the M5008, M5208, M5216, and M5316 MBSs and the M522 add-on. Perform these service orders according to established SERVORD user interface procedures for all MBSs. Five LCC values, M5008, M5208, M5216, and M5316 specify the type of set.

Line option M522 specifies that the sets that have the M522 add-on.

You can use the following SERVORD commands for MBSs to establish service, and delete and add options:

- NEW (establish service)
- ADO (add option)

- OUT (remove service)
- DEO (delete option)
- EST (establish a hunt or call pickup group)
- CHG (change option)

Service orders for the new MBSs depends on the established M5000 series of Meridian business sets.

When you use SERVORD to enter data, the system references two tables. The system references the tables to make sure that the entry of correct and non-conflicting LCCs and options occurs. The system references tables LCCOPT (Line Class Code Compatible Options) and OPTOPT (Incompatible Options). These tables are read-only. Operating company personnel cannot modify these tables.

Use SERVORD to enter data in table KSETINV (Business Set and Data-Unit Inventory), and KSETKEYS (Business Set Feature Keys).

SERVORD limits

The following SERVORD limits apply to MBS II Templates:

- You can only assign the M522 add-on line option to the M5216 and M5316 Meridian business sets.
- You cannot assign the M518 and M536 add-on line options to the M5008, M5208, M5216, and M5316 Meridian business sets.

SERVORD prompts

The SERVORD prompts appear in the following table. Use the prompts to assign, delete, add, and change MBS II Templates for the M5008, M5208, M5216, and M5316 Meridian business sets.

SERVORD prompts for MBS II Templates (Sheet 1 of 2)

Prompt	Correct input	Explanation
DN_OR_LEN	7-digit DN or LEN	Specifies the 7-digit DN or LEN of the line to change. Enter the DN or LEN.
OPTKEY	1 to 69	Indicates the key on an MBS to which the system assigns an option. Enter a value from 1 to 69.
OPTION	SCL, ADL	Indicates the name of the option. Enter SCL or ADL.

MBS II Templates (continued)

SERVORD prompts for MBS II Templates (Sheet 2 of 2)

Prompt	Correct input	Explanation
LISTTYPE	L30, L50, L70	Indicates the length of the SC list. Enter L30, L50, or L70.
LCC	M5008, M5208, M5216, M5316	Indicates the LCC of the service to establish, modify,or delete. Enter M5008, M5208, M5216, or M5316.

SERVORD example for adding a new MBS in MBS II Templates

The procedure to add MBS II Templates to a new business set service with the NEW command appears in this SERVORD example. The business set service in this example has DN 6210061 and LEN 0 0 0 27. The line associated with key 1 has ringing ability. The assignment of line option call forwarding universal (CFU) occurs on key 1 without override for the account code. The MBS is an M5316 equipped with two M522 add-ons.

MBS II Templates (continued)

SERVORD example for MBS II Templates in prompt mode

```
>NEW
SONUMBER: NOW 94 9 30 PM
>
DN:
> 6210061
LCC:
> M5316
GROUP:
> IBNTST
SUBGRP:
> 0
NCOS:
> 0
SNPA:
> 613
KEY:
> 1
RINGING:
> Y
LATANAME:
> NILLATA
LTG:
>0
LEN_OR_LTID
> 0 0 0 27
OPTKEY:
> 1
OPTION:
> M522
QUANTITY:
> 2
OPTKEY
> 1
OPTION:
> CFU
OVRDACR:
```

MBS II Templates (continued)

SERVORD example for MBS II Templates in prompt mode (continued)

```
> N
KEYLIST:
> $
OPTKEY:
> $
COMMAND AS ENTERED
NEW NOW 94 9 30 PM 6210061 M5316 IBNTST 0 0 613 1 Y
NILLATA 0 HOST 00027 (1 M522 2) (1 CFU N $) $
ENTER Y TO CONFIRM, N TO REJECT OR E TO EDIT
> Y
MACHINES ARE OUT OF SYNC, SERVICE ORDERS NOT ALLOWED
JOURNAL FILE IS INACTIVE, SERVICE ORDERS NOT ALLOWED
SHOULD ORDER BE DONE ANYWAY? (Y OR N)
>Y
```

SERVORD example for MBS II Templates in no-prompt mode

```
> NEW 6210061 M5316 IBNTST 0 0 613 1 Y NILLATA 0 0 0 27 1 M522 2 1
CFU N $ $
```

SERVORD example for establishing a DN hunt group for an M5216 business set in MBS II Templates

The use of MBS II Templates to add a DN hunt group with the EST command appears in the following SERVORD example. In this example, the user adds a DN hunt group to an M5216 MBS.

MBS II Templates (continued)

SERVORD example for MBS II Templates in prompt mode

```
>EST
SONUMBER:  NOW 94 9 30 PM
>
GROUPTYPE:
> DNH
PILOT_DN:
> 6210061
LCC:
> M5216
GROUP:
> IBNTST
SUBGRP:
> 0
NCOS:
> 0
SNPA:
> 613
KEY:
> 1
RINGING:
> Y
LATANAME:
> NILLATA
PILOT_LEN:
> 0 0 0 27
DN_OR_LEN:
> $
OPTION:
>M522
```

MBS II Templates (continued)

SERVORD example for MBS II Templates in prompt mode (continued)

```
QUANTITY:
> 2
OPTION:
> $
GROUPSIZE:
> 5
COMMAND AS ENTERED:
EST NOW 94 9 30 PM DNH 6210061 M5216 IBNTST 0 0 613 1 Y
NILLATA 0 HOST 00027 $ (M522 2) $ 5
ENTER Y TO CONFIRM, N TO REJECT OR E TO EDIT
> Y
MACHINES ARE OUT OF SYNC, SERVICE ORDERS NOT ALLOWED
JOURNAL FILE IS INACTIVE, SERVICE ORDERS NOT ALLOWED
SHOULD ORDER BE DONE ANYWAY ? (Y OR N)
> Y
```

SERVORD example for MBS II Templates in no-prompt mode

```
> EST DNH 6210061 M5216 IBNTST 0 0 613 1 Y NILLATA 0 0 0 27 $ M522
2 $ 5
```

SERVORD example for changing an M5316 MBS to an M5209 MBS in MBS II Templates

The following SERVORD example shows how the CHG (change option) command extends to MBS II Templates. In this example, the system assigns an M5316 MBS with the highest assigned key 10 to option CFU. Datafill with a M5209 set replaces this M5316 MBS. The M5209 MBS has only nine assignable keys. In this example the system deletes CFU option assigned to key 10 of the M5316.

MBS II Templates (end)

SERVORD example for MBS II Templates in prompt mode

```
>CHG
SONUMBER: NOW 94 9 30 PM
>
WHAT:
> LINE
DN_OR_LEN:
> 0 0 0 27
OPTKEY:
> 1
LINE_INFO:
> LCC
NEW_LCC:
> M5209
COMMAND AS ENTERED:
CHG NOW 94 9 30 PM LINE HOST 00027 1 LCC M5209 ENTER Y
TO CONFIRM, N TO REJECT OR E TO EDIT
> Y
WARNING: THE FOLLOWING WILL BE DELETED FROM THE SET:
   KEY   OPTION
   ---   ------
    10    CFU
MACHINES ARE OUT OF SYNC, SERVICE ORDERS NOT ALLOWED
JOURNAL FILE IS INACTIVE, SERVICE ORDERS NOT ALLOWED
SHOULD ORDER BE DONE ANYWAY? (Y OR N)
> Y
```

SERVORD example for MBS II Templates in no-prompt mode

```
> CHG LINE 0 0 0 27 1 LCC M5209
```

MBS Auto Answer Back

Ordering codes

Functional group ordering code: MDC00007

Functionality ordering code: does not apply

Release applicability

BCS16 and later versions

Requirements

The MBS Auto Answer Back feature has the following requirements:

- BAS Generic, BAS00003
- MDC Minimum, MDC00001

Description

The MBS Auto Answer Back (AAB) feature allows the system to answer an incoming call to on a Meridian business set (MBS). The call can be directed to either the primary directory number (PDN) or a secondary directory number (SDN). The system answers the call at a hands-free unit after 4 seconds of ringing. When the calling party replaces the receiver, the system disconnects the call.

Operation

The MBS Auto Answer Back feature requires a hands-free unit equipped for AAB. A key and lamp pair on an MBS can activate and deactivate the AAB feature. A set that does not have a key and lamp pair can have the AAB feature. If this condition occurs, the set is in a permanent AAB mode.

To activate AAB, the end user presses the AAB key. The status of the associated lamp is ON. When the user activates AAB, and an incoming call is received, 2 seconds of ringing occurs. The hands-free unit answers the call 4 seconds after ringing. The unit simulates an off-hook response. The station can be in the active or idle AAB mode.

To deactivate the AAB feature, the end user presses the AAB key. This action sets the associated status lamp to OFF.

Translations table flow

The MBS Auto Answer Back translations tables appear in the following list:

- Table KSETFEAT defines the line features assigned to business sets and data units. The MBS Auto Answer Back feature requires the entry of data in table KSETFEAT through SERVORD. Subfield KEY in field

MBS Auto Answer Back (continued)

FEATKEY identifies the specified key assignment. Subfield FEAT and field FEATURE identify the AAB feature.

- Table KSETLINE contains directory numbers (DN) for business sets and data units. The MBS Auto Answer Back feature requires the entry of data in table KSETLINE through SERVORD. Subfield OPTLIST in field DNRESULT identifies the AAB feature.

The MBS Auto Answer Back translation process appears in the following flowchart.

Table flow for MBS Auto Answer Back

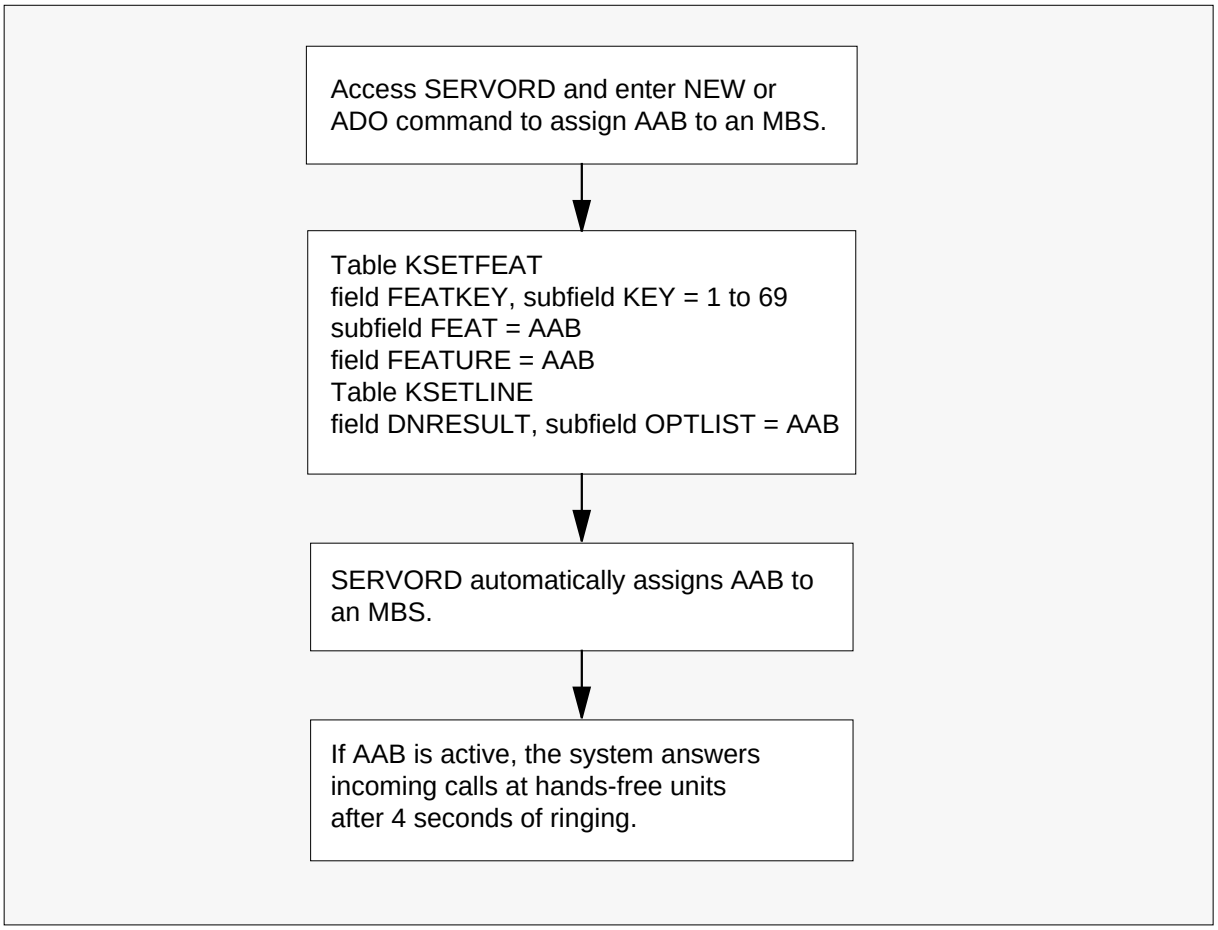

MBS Auto Answer Back (continued)

The datafill for the flowchart appears in the following example. In the example, the LEN and key of MBS with AAB is HOST 00 0 08 06 4.

Datafill example for MBS Auto Answer Back

Datafill table	Example data
KSETFEAT	HOST 00 0 08 06 4 AAB AAB
KSETLINE	HOST 00 0 08 06 4 DN Y 2462344 BNR 0 0 919 (AAB) $ MBS

Limits

The following limits apply to MBS Auto Answer Back:

- A hands-free unit equipped for AAB must be available.
- An applique circuit (NT4X21AD) must be available.
- The AAB applies to a single-appearance DN assigned on a business set.
- Incoming trunks must provide disconnect supervision. If disconnect supervision is not available, the attendant must intercept the call and provide disconnect supervision.

Interactions

The interactions between MBS Auto Answer Back and other functionalities appear in the following paragraphs.

- *Call Forwarding (CFW)* The AAB can be active with any type of CFW.
- *Call Forwarding Don't Answer (CFD)* The AAB takes priority over CFD.
- *Multiple Appearance Directory Number (MADN)* The AAB is not compatible with MADN.

Activation/deactivation by the end user

The MBS Auto Answer Back feature does not require activation or deactivation by the end user.

Billing

The MBS Auto Answer Back does not affect billing.

Station Message Detail Recording

The MBS Auto Answer Back does not affect Station Message Detail Recording.

Datafilling office parameters

The MBS Auto Answer Back does not affect office parameters.

Datafill sequence

The tables that require datafill to activate MBS Auto Answer Back appear in the following table. The tables appear in the correct entry order.

Datafill requirements for MBS Auto Answer Back

Table	Purpose of table
KSETFEAT (Note)	Business Set and Data Unit Feature
KSETLINE (Note)	Business Set and Data Unit Line
Note: Use SERVORD to enter data in this table. A procedure to enter data is not available.	

Tools for verifying translations

The MBS Auto Answer Back does not use tools for verifying translations.

SERVORD

Use the Service Order System (SERVORD) command ADO (add option) to assign option AAB. Use the DEO (delete option) command to remove option AAB. Option AAB allows the system to answer any incoming calls to the PDN or SDN of an MBS after 4 seconds.

SERVORD limits

The MBS Auto Answer Back feature does not have SERVORD limits.

MBS Auto Answer Back (continued)

SERVORD prompts

The SERVORD prompts to assign MBS Auto Answer Back to a current line appear in the following table.

SERVORD prompts for MBS Auto Answer Back

Prompt	Correct input	Explanation
DN_OR_LEN	7-digit DN or LEN	Specifies the 7-digit DN or LEN of the line to change. Enter the DN or LEN.
OPTKEY	1 to 69	Indicates the key on an MBS that has an option assigned. Enter a value from 1 to 69.
OPTION	AAB	Indicates the name of the option. Enter AAB.
Note: The system enters data in tables KSETFEAT and KSETLINE when you use SERVORD to assign MBS Auto Answer Back.		

SERVORD example for adding option AAB to an existing line

The assignment of option AAB to key 2 of an MBS appears in the following SERVORD example.

SERVORD example for MBS Auto Answer Back in prompt mode

```
SO:
>ADO
SONUMBER: NOW 92 10 01 PM
>
DN_OR_LEN:
>0 0 7 25
OPTKEY:
>2
OPTION:
>AAB
OPTKEY:
>$
```

MBS Auto Answer Back (end)

SERVORD example for MBS Auto Answer Back in no-prompt mode

```
>ADO  $  0 0 7 25  2  AAB  $
```

MBS Automatic Dial

Ordering codes

Functional group ordering code: MDC00007

Functionality ordering code: does not apply

Release applicability

BCS14 and later versions

Requirements

To operate, MBS Automatic Dial has the following requirements:

- BAS Generic, BAS00003
- MDC Minimum, MDC00001

Description

The MBS Automatic Dial (AUD) allows a Meridian business set (MBS) station end user to call a number by pressing the assigned feature key. The end user can change the assigned number stored against the feature key. Assignment of MBS Automatic Dial to the feature key occurs through the Service Order System (SERVORD).

Operation

If a business set has the MBS Automatic Dial feature, the end user can assign the following to a key and lamp pair:

- a station extension
- a seven- or ten-digit domestic number
- an overseas number
- an account code
- an authorization code

This assignment occurs in the on-hook state when the end user presses the AUD key. This action causes the lamp to wink at 120 ipm. The end user enters the number and presses the AUD key again. The lamp turns off, indicating the system stored the number against the key.

To activate this feature, the end user goes off-hook and presses the AUD key to call the stored number. If the system stores an account or authorization code, the end user presses the AUD key at the beginning of the call. The end user can press the AUD key when the system prompts for the code.

MBS Automatic Dial (continued)

To delete a stored number, the end user presses the AUD key when on-hook and then presses the octothorpe (#) key. The lamp associated with the AUD key goes off to indicate that the system deleted the number.

Translations table flow

MBS Automatic Dial uses translation table KSETFEAT. Table KSETFEAT (Business Set and Data Unit Feature) indicates the line features assigned to business sets and data units. Field FEATKEY, subfield KEY identifies the specified key for the AUD feature. Subfield FEAT and field FEATURE identify the AUD feature. Subfield PGMAUD specifies if the operating company assigns the standard AUD feature or programs the AUD key. Subfield AUDFEAT specifies a character string that SERVORD uses. The SERVORD uses this character string to decide what digits to program on the AUD key. This subfield defaults to STD. The end user programs the key.

The MBS Automatic Dial translation process appears in the following flowchart. The AUD feature assignment through SERVORD appears in the flowchart and data. The specified information in table KSETFEAT appear in the flowchart and data.

MBS Automatic Dial (continued)

Table flow for MBS Automatic Dial

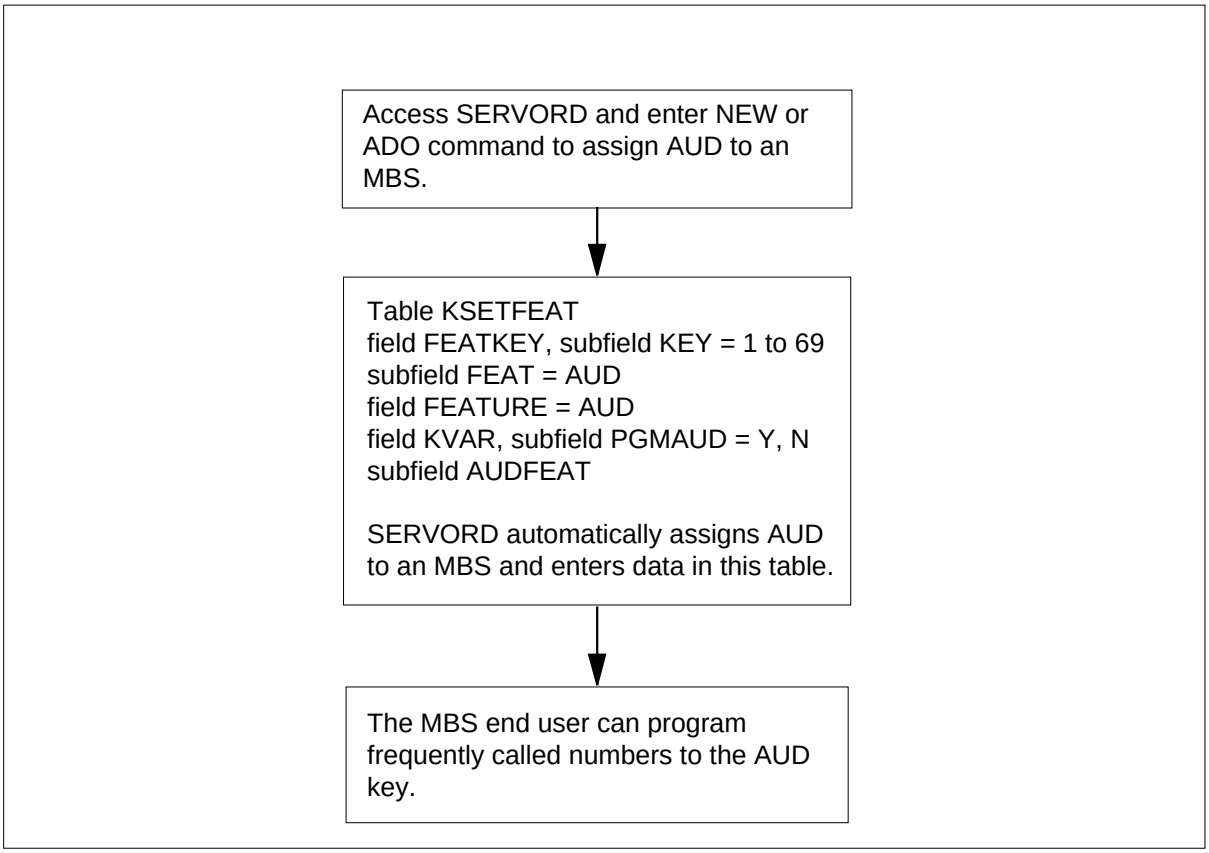

The datafill content for the flowchart appears in the following table.

Datafill example for MBS Automatic Dial

Datafill table	Example data
KSETFEAT	HOST 00 0 06 15 6 AUD AUD Y STD $

Limits

The following limits apply to MBS Automatic Dial:

- The system can store a maximum of 24 digits against an AUD key.
- If the stored number ends in an asterisk (*), the end user can dial more digits after pressing the AUD key. The end user cannot dial and add digits before pressing the AUD key.
- The system can store only one authorization code or account code for each key.

- The system does not store the octothorpe against an AUD key to indicate the end of dialing.
- An update can occur to a number stored against an AUD key after placing a call on hold.
- An update cannot occur to a stored AUD number after another party places the number on hold.
- The system ignores the pressing of the AUD key when on an established call. The end user cannot call the stored number. The end user cannot change the assigned number stored against the feature key.

Interactions

The interactions between MBS Automatic Dial and other functionalities appear in the following paragraphs.

Call Forwarding (CFW)

An AUD key can be in use when CFW is active. The feature operates normally.

Call Transfer (CXR)

The AUD can be in use to establish a call transfer.

Call Waiting

An AUD key can be in use when call waiting is active. The feature operates normally.

Cut-Through Dialing

The AUD key can implement cut-through dialing.

Make Set Busy (MSB)

An AUD key can be in use when make set busy is active. The feature operates normally.

Ring Again (RAG)

An AUD key can be in use when ring again is active. The feature operates normally.

Six-Port Conference Call

The AUD can be in use to establish a six-port conference call.

Speed Call List

The AUD cannot be in use to add a number to a speed call list.

MBS Automatic Dial (continued)

Three-Way Call

The AUD can be in use to establish a three-way call.

Activation/deactivation by the end user

The MBS Automatic Dial does not require activation or deactivation by the end user.

Billing

The MBS Automatic Dial does not affect billing.

Station Message Detail Recording

The MBS Automatic Dial does not affect Station Message Detail Recording.

Datafilling office parameters

The MBS Automatic Dial does not affect office parameters.

Datafill sequence

The tables that require datafill to implement MBS Automatic Dial appear in the following table. The tables appear in the correct entry order.

Datafill tables required for MBS Automatic Dial

Table	Purpose of table
KSETFEAT	Business Set and Data-Unit Feature Table. This table indicates the line features that are assigned to the business sets and data units (DU) in table KSETLINE. This table indicates the line features assigned to the Meridian digital telephone sets and DUs in table IVDINV. ***Note:*** Use SERVORD to enter data in this table. The datafill procedure or example is not available. See “SERVORD" for an example of how to enter data in SERVORD this table.

Tools for verifying translations

MBS Automatic Dial does not use tools for verifying translations.

SERVORD

Use SERVORD to enter data in table KSETFEAT.

Table KSETFEAT indicates the line features assigned to the business sets and data units (DU) in table KSETLINE. Table KSETFEAT indicates the Meridian digital telephone sets and DUs in table IVDINV.

MBS Automatic Dial (continued)

Use the ADO (add option) to assign option AUD. Use the DEO (delete option) command to remove option AUD. Option AUD allows a business set end user to call a number dialed often by pressing the assigned AUD key. The end user can program and change this number.

SERVORD limits

MBS Automatic Dial does not have SERVORD limits.

SERVORD prompts

The SERVORD prompts used to assign MBS Automatic Dial to assign to an current line appear in the following table.

SERVORD prompts for MBS Automatic Dial

Prompt	Valid input	Explanation
DN_OR_ LEN	7-digit DN or LEN	Specifies the 7-digit DN or LEN of the line changes. Enter the DN or LEN.
OPTKEY	1 to 69	Indicates the key on an MBS to which an option is assigned. Enter a value from 1 to 69.
OPTION	AUD	Indicates the name of the option. Enter AUD.

Note: The system automatically enters data in table KSETFEAT when the end user uses the SERVORD assigns MBS Automatic Dial.

SERVORD example for adding MBS Automatic Dial

The use of the ADO command to add MBS Automatic Dial to a current line appears in the following SERVORD example.

MBS Automatic Dial (end)

SERVORD example for MBS Automatic Dial in prompt mode

```
SO:
> ADO
SONUMBER:   NOW 87  10  10  PM
>
DN_OR_LEN:
> 2 1 2 11
OPTKEY:
> 7
OPTION:
> AUD
AUDDON:
> 2319876
OPTKEY:
> $
```

SERVORD example for MBS Automatic Dial in no-prompt mode

```
>ADO  $  2 1 2 11  7  AUD  2319876  $
```

MBS Automatic Line

Ordering codes

Functional group ordering code: MDC00007

Functionality ordering code: does not apply

Release applicability

BCS14 and later versions

Requirements

To operate, MBS Automatic Line requires BAS Generic, BAS00003.

Description

The MBS Automatic Line (AUL) is a directory number (DN) feature. Separate DN appearances on a Meridian business set (MBS) can have this feature. These DN appearances include the primary directory number (PDN).

When a DN appearance with MBS Automatic Line assigned reports an off-hook condition, the system connects to a predetermined location. Assignment of MBS Automatic Line establishes the predetermined location.

Operation

On MBSs, the end user performs the off-hook in one of two methods. The end user can press the DN key with MBS Automatic Line. The end user can lift the receiver from the cradle. In this condition, the system selects the PDN. The end user hears audible ringing. The system automatically dials the preassigned number dials. Digits entered through the Service Order System (SERVORD) during assignment of MBS Automatic Line specify the terminating location. The same office can serve the terminating location. The terminating location can involve outpulsing. This stored number can be from 1 to 15 digits in length. This number cannot include asterisks (*) or octothorpes (#).

Translations table flow

Descriptions of the MBS Automatic Line translations tables appear in the following list:

- Table KSETFEAT (Business Set and Data Unit Feature) lists the line features assigned to business sets and data units. Field FEATKEY, subfield KEY identifies the specified key for the AUL feature. Subfield FEAT and

MBS Automatic Line (continued)

field FEATURE identify the AUL feature. Subfield DN specifies the number to outpulse when the end user goes off-hook.

The MBS Automatic Line translation process appears in the following flowchart.

Table flow for MBS Automatic Line

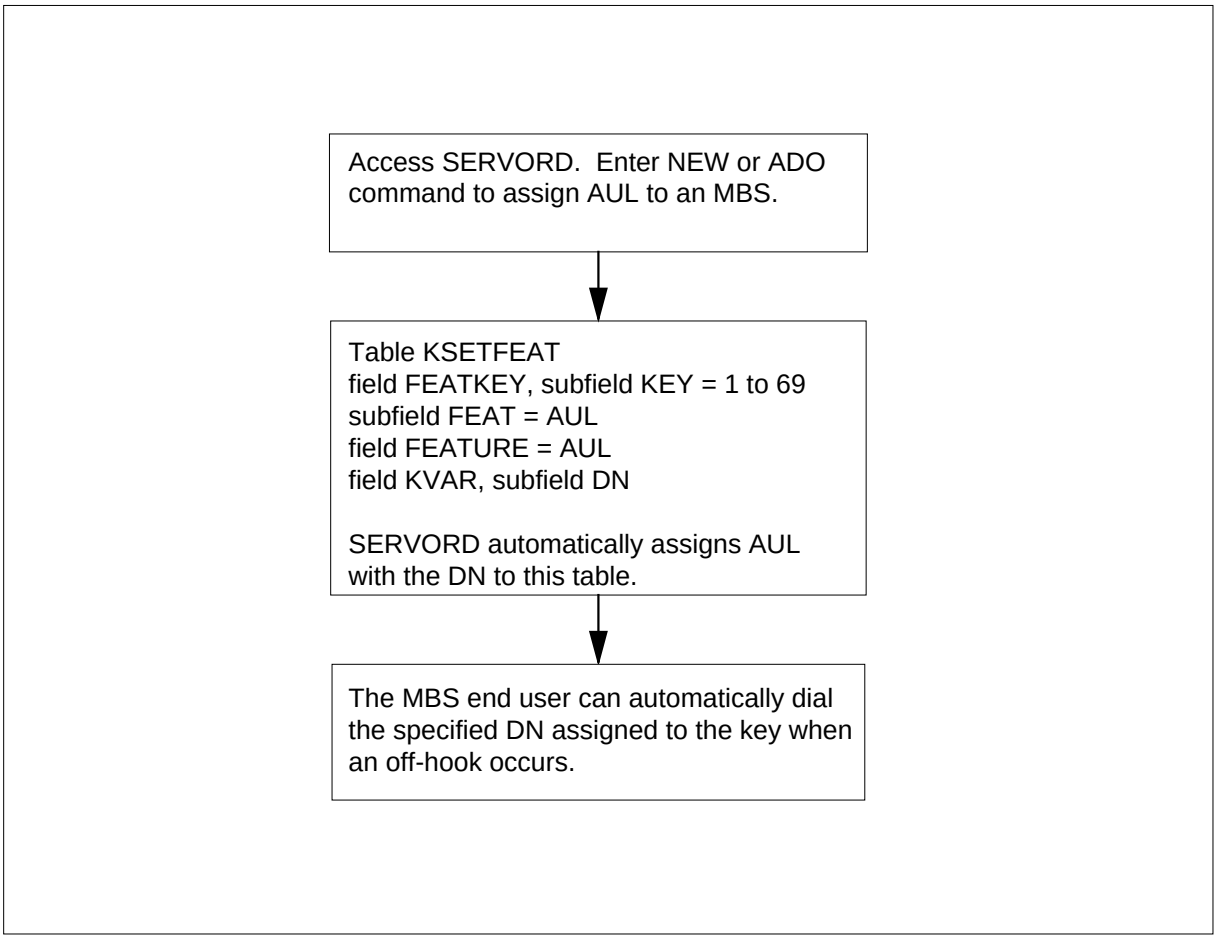

The datafill content used in the flowchart appears in the following table.

Datafill example for MBS Automatic Line

Datafill table	Example data
KSETFEAT	HOST 00 0 06 15 6 AUL AUL 2266000

MBS Automatic Line (continued)

Limits

The following limits apply to MBS Automatic Line:

- Automatic dial is not compatible with MBS Automatic Line.
- Speed calling is not compatible with MBS Automatic Line.

Interactions

The MBS Automatic Line does not have functionality interactions.

Activation/deactivation by the end user

The MBS Automatic Line does not require activation or deactivation by the end user.

Billing

The MBS Automatic Line does not affect billing.

Station Message Detail Recording

The MBS Automatic Line does not affect Station Message Detail Recording.

Datafilling office parameters

The MBS Automatic Line does not affect office parameters.

Datafill sequence

The tables that require datafill to implement MBS Automatic Line appear in the following table. The tables appear in the correct entry order.

Datafill requirements for MBS Automatic Line

Table	Purpose of table
KSETFEAT (Note)	Business Set and Data-Unit Feature. This table contains the line features assigned to the business sets and data units (DU) in table KSETLINE. This feature contains the line features assigned to the Meridian digital telephone sets and DUs in table IVDINV.
Note: Enter data in this table through SERVORD. A datafill procedure or example is not available. See “SERVORD" for an example of how to use SERVORD to enter data in this table.	

Tools for verifying translations

The MBS Automatic Line does not use tools for verifying translations.

SERVORD

Use SERVORD to enter data in table KSETFEAT.

MBS Automatic Line (continued)

Table KSETFEAT (Business Set and Data-Unit Feature) contains the line features assigned to the business sets and data units (DU) in table KSETLINE. Table KSETFEAT contains the line features assigned to the Meridian digital telephone sets and DUs in table IVDINV.

Assign option AUL with the Service Order System (SERVORD) command ADO (add option). Use the DEO (delete option) command to remove option AUL. Option AUL automatically makes a connection to a predetermined location when a DN or line with AUL reports an off-hook. Assignment of option AUL establishes the predetermined location.

SERVORD limits

The MBS Automatic Line does not have SERVORD limits.

SERVORD prompts

The SERVORD prompts used to assign MBS Automatic Line to a current line appear in the following table.

SERVORD prompts for MBS Automatic Line

Prompt	Valid input	Explanation
DN_OR_ LEN	7-digit DN or LEN	Specifies the seven-digit DN or LEN of the line to change. Enter the DN or LEN.
OPTKEY	1 to 69	Indicates the key on an MBS to which assignment of an option occurs. Enter a value from 1 to 69.
OPTION	AUL	Indicates the name of the option. Enter AUL.
AULDN	Local or toll DN to which the AUl connects; 15 digits maximum	Indicates the automatic line DN. Enter the local or toll DN to which the AUL connects. This number can be a maximum of 15 digits.

Note: The system enters data in table KSETFEAT when you assign MBS Automatic Line with SERVORD.

SERVORD example for implementing MBS Automatic Line

You can add MBS Automatic Line to a current line with the ADO command. This procedure appears in the following SERVORD example.

MBS Automatic Line (end)

SERVORD example for MBS Automatic Line in prompt mode

```
SO:
> ADO
SONUMBER:   NOW 87  10  10  PM
>
DN_OR_LEN:
> 2 1 2 11
OPTKEY:
> 1
OPTION:
> AUL
AULDN:
> 2266000
OPTKEY:
> $
```

SERVORD example for MBS Automatic Line in no-prompt mode

```
>ADO  $  2 1 2 11  1  AUL  $
```

MBS Busy Override

Ordering codes

Functional group ordering code: MDC00007

Functionality ordering code: does not apply

Release applicability

BCS14 and later versions

Requirements

The MBS Busy Override feature has the following requirements:

- BAS Generic, BAS00003
- MDC Minimum, MDC00001

Description

The MBS Busy Override feature allows a business set station to call a busy station. To perform this action, the user presses the Executive Busy Override (EBO) key or dials the EBO access code. The MBS Busy Override feature is a set feature. The feature applies to all the directory numbers (DN) on the business set. The MBS Busy Override feature can be active on a minimum of one DN on the business set at the same time. Each EBO depression associates with the DN that is currently active. The MBS Busy Override feature does not have an associated lamp.

Operation

The MBS Busy Override operates with the following:

- The station of a calling party can have the MBS Busy Override assigned. The calling party dials another IBN station in the same customer group and receives busy tone.
- The calling party presses the EBO key.
- The called party and the party connected to the called party hears 500 ms of EBO warning tone. The calling party hears silence. The called station or the station connected to the called station can have the executive busy override exempt (EBX) feature assigned. If this condition occurs, the calling party hears reorder tone.
- At the end of the warning tone, the system establishes a three-way calling (3WC) connection. The calling party has control of this connection.

- The calling party can deliver a message and go on-hook. This action allows the original call to continue.
- If the calling party wants to speak privately to the called party, the calling party presses the EBO key a second time. This action causes the system to drop the party connected to the called party. The connection remains between the calling party and the called party.

Translations table flow

The MBS Busy Override translations tables appear in the following list:

- Table KSETFEAT (Business Set and Data Unit Feature) contains the line features assigned to specified business sets and data units. The business sets and data units appear in table KSETLINE (Business Set and Data Unit Line Assignment).
- Table IBNXLA (IBN Translation) stores the data for the digit translation of calls from one of the following:

  — an IBN station

  — an attendant console (AC)

  — an incoming side of a two-way IBN trunk group

  This table defines the access code to activate EBO for MBS Individual Business Line.
- Table CLLI (Common Language Location Identifier) contains the name that identifies each tone, announcement, or trunk group in the switch. For MBS Busy Override, this table identifies the name of the Executive Busy Override Tone (EBOT).
- Table STN (Special Tone) contains tones that require trunk cards. For MBS Busy Override, the table contains the Executive Busy Override Tone circuit.

The MBS Busy Override translation process appears in the following flowchart. The MBS end user can attempt to reach another member of the customer group when the line is busy. When this event occurs, the system allows access to specified tables. These tables and the associated information appear in the flowchart and data.

MBS Busy Override (continued)

Table flow for MBS Busy Override

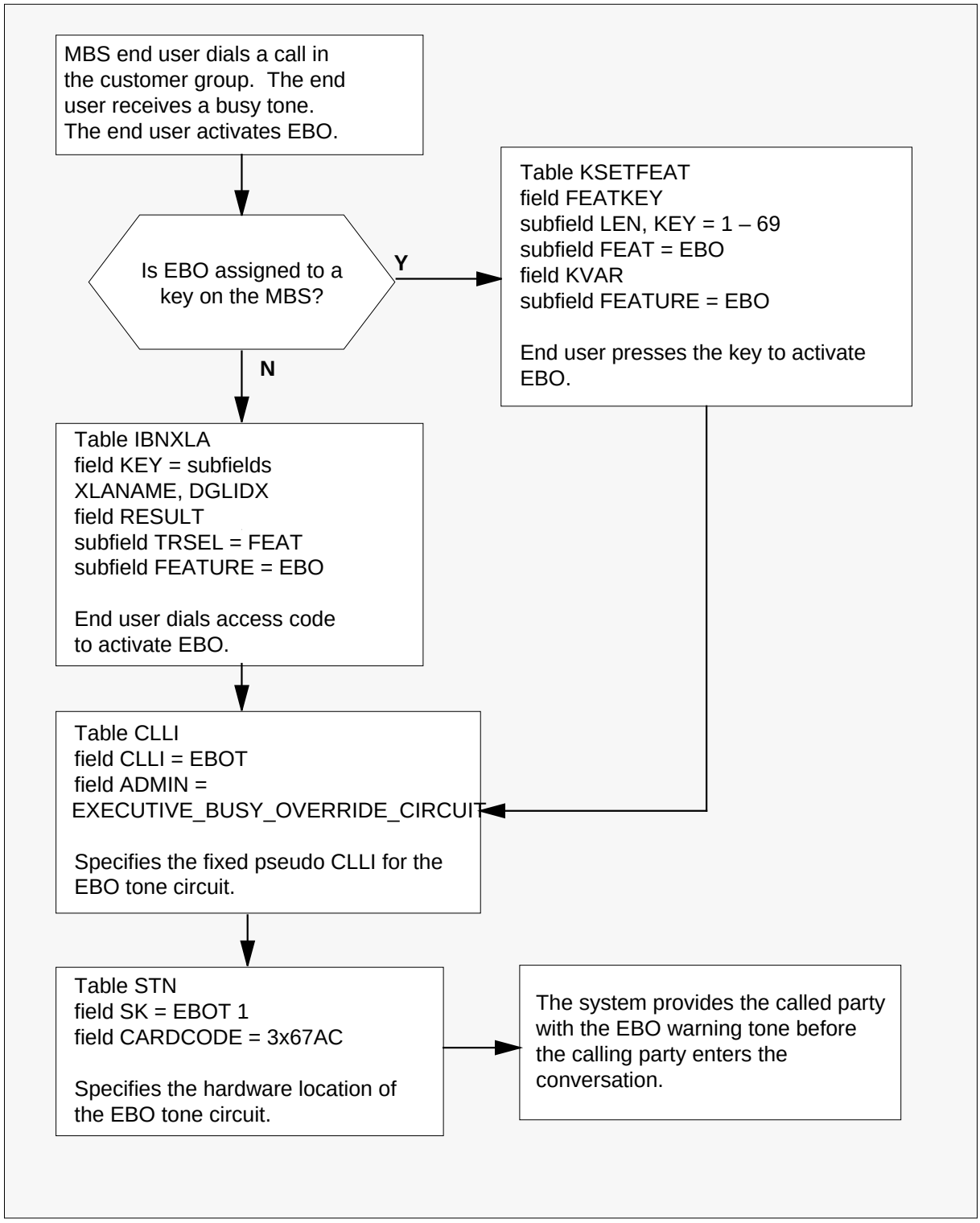

The datafill for the flowchart appears in the following table.

Datafill example for MBS Busy Override

Datafill table	Example data
KSETFEAT	HOST 0 0 3 08 6 EBO EBO
IBNXLA	CUSTXLA 44 FEAT N N N EBO
CLLI	EBOT 129 64 EXECUTIVE_BUSY_OVERRIDE_CIRCUITS
STN	EBOT 1 MTM 5 14 3X68AC 10 0

Limits

The following limits apply to MBS Busy Override:

- The called station must be an IBN line in the same customer group as the calling station.
- The called station must be in the talking state. The called station must connect to a line or trunk not assigned the EBX feature.
- The MBS Busy Override cannot interrupt a call that involves a hunt group member.
- The MBS Busy Override operates for intra-voice calls and non-toll inter-office calls. This feature cannot operate for toll trunk type calls.

Interactions

The interactions between MBS Busy Override and other functionalities appear in the following paragraphs.

Call Forwarding All Calls

The system can forward the calling party from the called station. This event occurs when the called station is in the call forwarding all calls mode. When the system forwards the calling party with the called station in this mode, MBS Busy Override cannot operate.

Call Forwarding Busy (CFB)

The system can forward the calling party from the called station when the called station is in the CFB mode. The calling party connects to busy tone. When these conditions occur, the system can apply MBS Busy Override to the original called station.

MBS Busy Override (continued)

Call Forwarding Don't Answer (CFD)

The system can forward the calling party from the called station when the called station is in the CFD mode. When this event occurs, the system does not allow MBS Busy Override.

Call Waiting (CWT)

The system can call wait a business set with MBS Busy Override and CWT. This event occurs when the business set is active with MBS Busy Override.

Do Not Disturb (DND)

When the called station is in the DND mode, the system routes the calling party to the attendant. The system does not activate MBS Busy Override.

No Double Connect

If the called station has the no double connect feature, the system cannot activate the MBS Busy Override.

Executive Busy Override Exempt (EBX)

If the called station has the EBX feature, the system cannot activate MBS Busy Override.

Flexible Intercept

When the flexible intercept feature causes the system to reroute the calling party, the system does not activate MBS Busy Override.

Speed Calling

You can use speed calling with cell numbers as feature access codes for MBS Busy Override. Table IBNXLA (IBN Translation) must contain the feature access code that activates the feature. This access code must be under the customer group translator or a preliminary translator for the customer group. The feature STAR translator for the customer group must not contain the feature access code. You normally use STAR to dial speed call cell numbers. When a speed call cell has a STAR feature access code programmed, program two STARs. This condition cannot occur. You can program only one feature in a speed call cell.

Three-Way Calling/Call Transfer (3WC/CXR)

When the called station is in the 3WC/CXR mode, the system does not activate MBS Busy Override.

Activation/deactivation by the end user

To operate MBS Busy Override, the end user performs the following steps.

Activation/deactivation of MBS Busy Override by the end user

At your telephone:

1. The station of a calling party can have MBS Busy Override assigned. The calling party that has this station dials another IBN station in the same customer group.

   Response:

   The calling party receives busy tone.

2. The calling party presses the EBO key.

   Response:

   The called party and the party connected to the called party hear 500 ms of EBO warning tone. The calling party hears silence. At the end of warning tone, the system establishes a 3WC connection with the calling party in control.

   Note: If the called station or the station connected to called station has the EBX feature, the calling party hears reorder tone.

3. The calling party delivers the message and goes on-hook.

   Response:

   The original call continues.

   or

   If the calling party wants to speak privately to the called party, the calling party presses the EBO key a second time.

   Response:

   The system drops the party connected to the called party. The connection remains between the calling party and the called party.

Billing

The MBS Busy Override does not affect billing.

Station Message Detail Recording

The MBS Busy Override does not affect Station Message Detail Recording.

Datafilling office parameters

The MBS Busy Override does not affect office parameters.

MBS Busy Override (continued)

Datafill sequence

The tables that require datafill to activate MBS Busy Override appear in the following table. The tables appear in the correct entry order.

Datafill requirements for MBS Busy Override

Table	Purpose of table
CLLI	Common Language Location Identifier. This table contains the name that identifies each tone, announcement, or trunk group in the switch.
STN	Special Tone. This table contains tones that require trunk cards.
IBNXLA	IBN Translation. This table contains the data for the digit translation of calls from the following: • an IBN station • an attendant console (AC) • an incoming side of a two-way IBN trunk group
KSETFEAT	Business Set and Data-Unit Feature. This table contains the line features assigned to the business sets and data units (DU) in table KSETLINE. This table contains the line features assigned to the Meridian digital telephone sets and DUs that appear in table IVDINV. ***Note:*** Use SERVORD to enter data in this table. A procedure to enter data or an example is not available. See “SERVORD" for an example of how to use SERVORD to enter data in this table.

Note: You can assign MBS Busy Override to a dedicated key in table KSETFEAT, or to an access code in table IBNXLA.

Datafilling table CLLI

Table CLLI (Common Language Location Identifier) contains the name that identifies each tone, announcement, or trunk group in the switch. For MBS Busy Override, this table identifies the name of the Executive Busy Override Tone (EBOT). Enter data in table CLLI to add the fixed pseudo CLLI. The fixed pseudo CLLI is EBOT.

MBS Busy Override (continued)

Datafill for MBS Busy Override for table CLLI appears in the following table. The fields that apply to MBS Busy Override appear in this table. See the data schema section of this document for a description of the other fields.

Datafilling table CLLI

Field	Subfield or refinement	Entry	Explanation and action
CLLI		EBOT	Common Language Location Identifier. This field specifies the 1 to 16 alphanumeric characters that identify the far end of each announcement, tone, or trunk group. Enter EBOT.

Datafill example for table CLLI

Sample datafill for table CLLI appears in the following example.

MAP example for table CLLI

```
CLLI    ADNUM    TRKGRSIZ                    ADMININFO
_____________________________________________________________

EBOT     129      64     EXECUTIVE_BUSY_OVERRIDE_CIRCUITS
```

Datafilling table STN

Table STN (Special Tone) contains tones that require trunk cards. For MBS Busy Override, the Executive Busy Override Tone circuit appears in this table.

MBS Busy Override (continued)

Datafill for MBS Busy Override for table STN appears in the following table. The fields that apply to MBS Busy Override appear in this table. See the data schema section of this document for a description of the other fields.

Datafilling table STN

Field	Subfield or refinement	Entry	Explanation and action
SK		0 to 999	Special Tone Key. This field specifies the pseudo fixed code assigned to the tone trunk circuit in table CLLI. This field specifies a value from 0 to 999. Enter EBOT and a numeric value from 0 to 999.
CARCODE		3X68AC	Card Code. This field specifies the product engineering code (PEC) of the tone trunk circuit. Enter 3X68AC.

Datafill example for table STN

Sample datafill for table STN appears in the following example.

MAP example for table STN

```
     SK
      TMTYPE   TMNO   TMCKTNO   CARDCODE   MAXCONN TRAFSNO
_____________________________________________________________

EBOT 1
       MTM      5        14      3X68AC       10        0
```

Datafilling table IBNXLA

Table IBNXLA (IBN Translation) contains the data for the digit translation of calls from one of the following locations:

- an IBN station
- an attendant console (AC)
- an incoming side of a two-way IBN trunk group

This table assigns the EBO access code for MBS Individual Business Line.

MBS Busy Override (continued)

Datafill for MBS Busy Override for table IBNXLA appears in the following table. The fields that apply to MBS Busy Override appear in this table. See the data schema section of this document for a description of the other fields.

Datafilling table IBNXLA

Field	Subfield or refinement	Entry	Explanation and action
KEY		see subfields	Key. This field contains subfields XLANAME and DGLIDX.
	XLANAME	1- to 8-character name	Translator Name. This subfield specifies the name assigned to the translator. Enter the 1- to 8-character name.
	DGLIDX	1- to 18-digit number	Digilator Index. This subfield specifies the access code. Enter the 1- to 18-digit number assigned as the access code.
RESULT		see subfields	Result. This field contains subfield TRSEL.
	TRSEL	FEAT	Translations Selector. This subfield specifies the translations selector to use. Enter FEAT. ***Note:*** If TRSEL is at FEAT, subfields ACR, SMDR, and FEATURE require datafill.
	ACR	Y or N	Account Code Entry. This subfield specifies if an account code is a requirement. Enter Y or N.
	SMDR	Y or N	Station Message Detail Recording. This subfield specifies if SMDR is a requirement. Enter Y or N.
	FEATURE		Feature. This subfield specifies the feature assigned to a line. Enter EBO.

Datafill example for table IBNXLA

Sample datafill for table IBNXLA appears in the following example.

MBS Busy Override (continued)

MAP example for table IBNXLA

```
KEY                                                    RESULT
_______________________________________________________________

CUSTXLA   44                        FEAT   N   N    N     EBO
```

Tools for verifying translations

The MBS Busy Override feature does not use tools for verifying translations.

SERVORD

Use the Service Order System (SERVORD) command ADO (add option) to assign option EBO. Use the DEO (delete option) command to remove option EBO. Option EBO allows a station end user to gain access to a busy station. The end user flashes the switch hook during busy tone and dials an access code. To activate EBO on business sets, the end user presses the EBO key. This action causes the calling station to establish a three-way conference with the busy station.

Note: The system automatically enters data in table KSETFEAT when you assign MBS Busy Override through SERVORD.

SERVORD limits

The MBS Busy Override does not have SERVORD limits.

SERVORD prompts

The SERVORD prompts to assign MBS Busy Override to a current line appear in the following table.

SERVORD prompts for MBS Busy Override

Prompt	Valid input	Explanation
DN_OR LEN	7-digit DN or LEN	Specifies the 7-digit DN or LEN of the line to change. Enter the DN or LEN.
OPTKEY	1 to 69	Indicates the key on an MBS that must have an option assigned. Enter a value from 1 to 69.
OPTION	EBO	Indicates the name of the option. Enter EBO.

MBS Busy Override (end)

SERVORD example for adding MBS Busy Override

The addition of MBS Busy Override to a current line through the ADO command appears in the following SERVORD example.

SERVORD example for MBS Busy Override in prompt mode

```
SO:
> ADO
SONUMBER:   NOW 87  10  10  PM
>
DN_OR_LEN:
> 2 1 2 11
OPTKEY:
> 7
OPTION:
> EBO
OPTKEY:
> $
```

SERVORD example for MBS Busy Override in no-prompt mode

```
>ADO  $  2 1 2 11  7  AUD  $
```

MBS Call Back Queuing

Ordering codes

Functional group ordering code: MDC00007

Functionality ordering code: does not apply

Release applicability

BCS14 and later versions

Requirements

To operate, MBS Call Back Queuing has the following requirements:

- BAS Generic, BAS00003
- MDC Minimum, MDC00001

Description

The MBS Call Back Queuing feature allows the system to notify a Meridian business set (MBS) end user encountering an all-trunks-busy condition. The system notifies the end user when a trunk becomes idle. The system connects the end user to the called number using the MBS Call Back Queuing feature. The MBS Call Back Queuing feature is an enhancement to the ring again (RAG) feature.

An MBS can activate the MBS Call Back Queuing feature in the following conditions:

- The outgoing trunk group is an IBN customer group trunk group with MBS Call Back Queuing allowed. An idle trunk is not available. This means that the no-circuits condition must occur at the DMS-100 switch outgoing end. Distant switch no-circuit conditions do not apply to MBS Call Back Queuing.
- Direct outward dial (DOD) places the call. The same DMS-100 switch serves the called busy line. The called busy line can be a plain old telephone service (POTS) line or an IBN line in another customer group.
- The system places the call on a station-to-station basis. The same DMS-100 switch serves both stations. The called busy line is an IBN line that belongs to another customer group.
- The system gives the end user expensive route warning tone (ERWT).

Operation

The end user can hear busy tone, reorder tone, ERWT, or a no-circuits-available announcement. At this time, the end user can perform the following steps to invoke the MBS Call Back Queuing feature.

- The end user presses the RAG key. The lamp next to the RAG key illuminates. The lamp next to the directory number (DN) goes off.

  Note: When the MBS Call Back Queuing feature starts, the end user is free to originate or receive calls.

- When the trunk or line becomes idle, the end user receives notification tone. The lamp next to the RAG key flashes.
- The end user presses an inactive DN key, receives dial tone, and presses the RAG key. The lamp next to the RAG key goes off. The end user receives audible ringing.

  Note: If a recipient does not answer the RAG notification quickly, use of the trunk can occur again and the end user receives busy tone.

- If a recipient does not answer RAG notification in the predefined time allowed, the following events occur. The lamp next to the RAG key extinguishes. The system cancels the call.
- Press the RAG key to cancel the MBS Call Back Queuing feature. Perform this action unless RAG notification occurs.

Translations table flow

The MBS Call Back Queuing translations tables appear in the following list:

- Table KSETLINE (Business Set and Data Unit Line Assignment) defines the hardware location of the business sets and data units. Table KSETLINE defines information about each DN appearance on the sets. Enter data in this table when the assignment of MBS or data unit occurs in SERVORD.
- Table KSETFEA (Keyset Feature) lists the line features assigned to the business sets and data units that appear in table KSETLINE. For the MBS Call Back Queuing feature, the RAG feature assigned to a key is necessary. The RAG assignment occurs through SERVORD.
- Table NCOS (Network Class of Service) contains the NCOS numbers assigned to each attendant console, MDC station, and incoming IBN trunk group. Table NCOS contains the NCOS numbers assigned to the incoming side of a two-way IBN trunk group, authorization code, and customer group. The NCOS defines the specified features or dialing patterns available to the stations, trunks, or consoles in a customer group. For this

MBS Call Back Queuing (continued)

feature, the identification of CBQ option occurs with the priority levels. The XLAS option is identified as a translator for the NCOS.

- Table CUSTSTN (Customer Group Station Option) contains the station options assigned to each customer group. Options CBQ and RAGTIM in table CUSTSTN specify the timers associated with the CBQ and RAG features.
- Table IBNXLA (IBN Translation) stores the digit translations information of the MDC access codes. This table stores the options or features to which the codes belong.

  Note: MBS Call Back Queuing requires that you enter data in Table IBNXLA. You must enter data to identify the access code and the translator selector that directs the call to the table for call completion.

- Table IBNRTE (IBN Route) contains route lists identified by a route reference number. Tables IBNRT2, IBNRT3, and IBNRT4 have the same fields and subfields as table IBNRTE and function the same. This condition allows more flexibility by segregating the routing schemes for WATS, private network, and equal access.

The route selectors (subfield IBNRTSEL) in this table that specify if CBQ and EXP (expensive route warning tone) apply are S, N, QH, OW, EOW, and VFG. The expensive route warning tone is a fixed pseudo code. Table CLLI and table STN (Special Tone) identify this code with the product engineering code of 3X68AC. Table STN identifies the location of the ERWT card in the switch. For details on all selectors in Table IBNRTE and Table STN, see the data schema section of this document.

The MBS Call Back Queuing translation process appears in the following flowchart.

MBS Call Back Queuing (continued)

Table flow for MBS Call Back Queuing

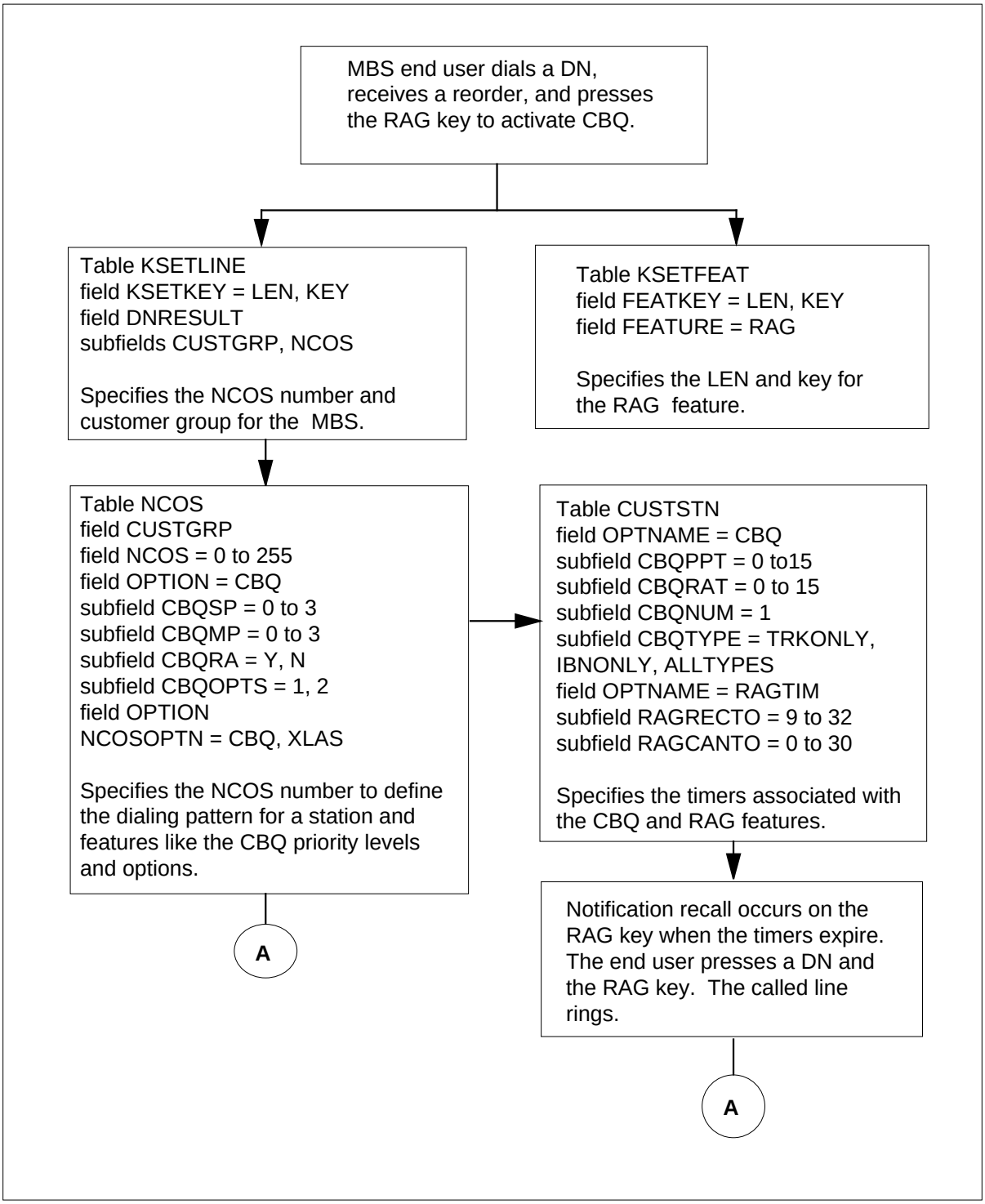

MBS Call Back Queuing (continued)

Table flow for MBS Call Back Queuing (continued)

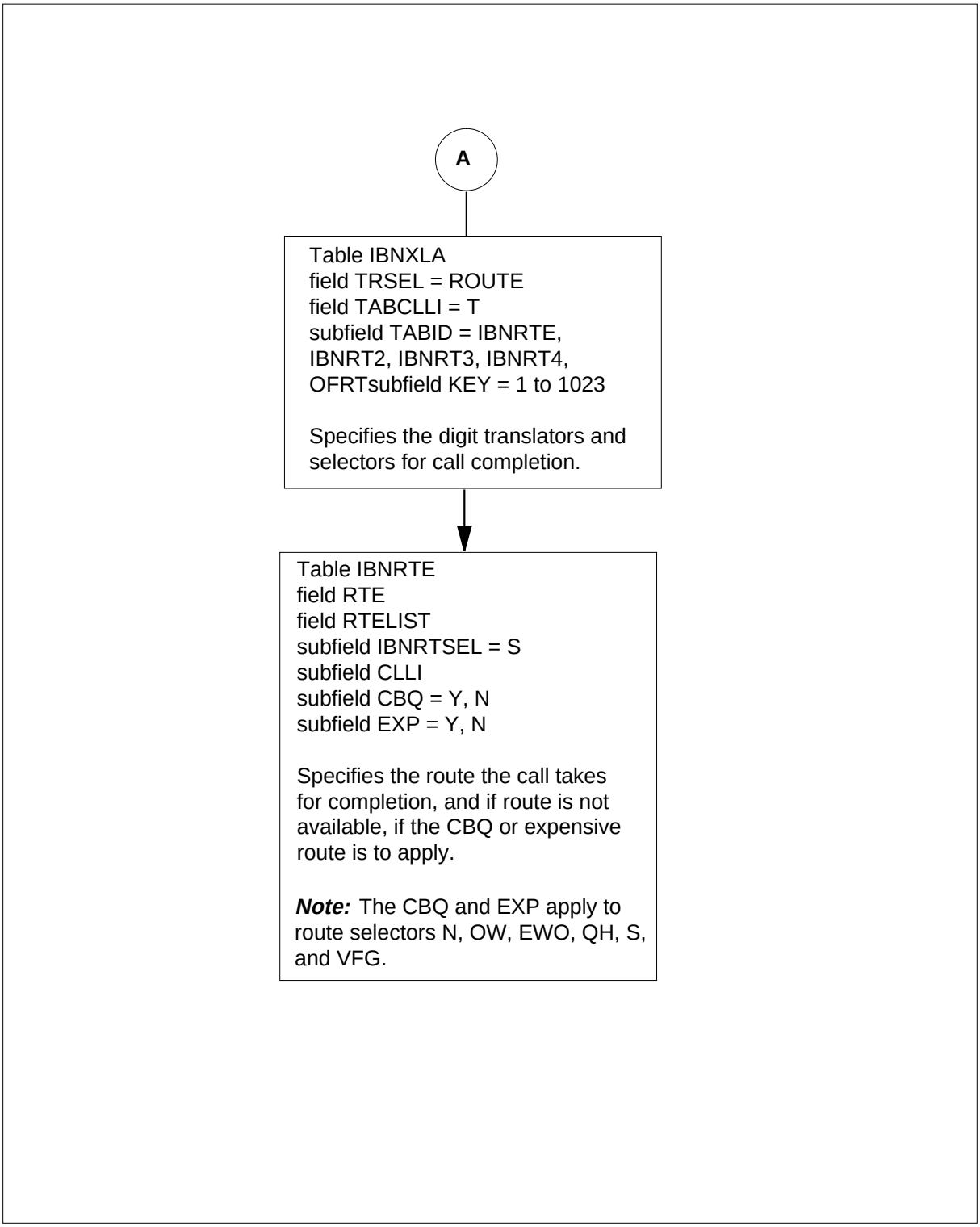

Datafill content used in the flowchart appears in the following table.

Datafill example for MBS Call Back Queuing

Datafill table	Example data
KSETLINE	HOST 00 0 01 25 1 DN Y 5552000 MDCGRP1 0 0 919
KSETFEAT	HOST 00 0 01 25 4 RAG RAG
CUSTSTN	MDCGRP1 CBQ CBQ 1 3 1 ALLTYPES
NCOS	MDCGRP1 0 MDCGRP1NC 0 0 CBQ 1 3 Y 2 XLAS MDCXLA1 NXLA NDGT $
IBNXLA	MDCXLA1 2 ROUTE N N N 1 Y 1 1 NDGT N T IBNRTE 1
IBNRTE	1 S N Y N N MDCPVT $

Limits

The following limits apply to MBS Call Back Queuing:

- The MBS Call Back Queuing is not allowed if reorder tone is a result of some violations. These violations are feature and violation network class of service violation.
- The system does not support MBS Call Back Queuing for attendant queues.

Interactions

The following paragraphs describe the interactions between MBS Call Back Queuing and other functionalities.

Automatic Lines

The MBS Call Back Queuing feature cannot be assigned to automatic lines.

Call Forwarding Intragroup

If call forwarding intragroup (CFI) is activated, the system continues to serve the call back queuing request. The call back queuing recall does not follow the call forward feature.

Call Forwarding Universal

If call forwarding universal (CFU) is activated, the system continues to serve the call back queuing request. The call back queuing recall does not follow the call forward feature.

MBS Call Back Queuing (continued)

Call Pickup

You cannot use the call pickup (CPU) feature to pick up call back queuing recalls.

Expensive Route Warning Tone

The system does not give the ERWT to recalled call back queuing requests. This condition is present even if the call is completed using expensive facilities.

Hunt Groups

Hunt groups cannot have the MBS Call Back Queuing feature assigned.

Manual Lines

Manual lines cannot have the MBS Call Back Queuing feature assigned.

Off-hook Queuing

If a trunk that allows both off-hook queuing and call back queuing becomes idle, the off-hook queue has priority.

Originating Service

Lines denied originating service cannot have the MBS Call Back Queuing feature assigned.

Overlap Outpulsing

Overlap outpulsing is not correct with the MBS Call Back Queuing feature.

Ring Again

Activation of the MBS Call Back Queuing feature when a RAG request is pending overwrites the RAG request. When a call back queuing request is pending, activation of the RAG request overwrites the call back queuing request.

Terminating Service

Lines denied terminating service cannot have the MBS Call Back Queuing feature assigned.

Virtual Facility Group

For BCS15 and later versions, call back queuing follows the virtual facility group (VFG) if the original call goes through a VFG.

Activation/deactivation by the end user

The end user can hear busy tone, reorder tone, ERWT, or a no-circuits-available announcement. At this time, the end user can perform the following steps to invoke the MBS Call Back Queuing feature.

Activation/deactivation of MBS Call Back Queuing by the end user

At your telephone:

1 Press RAG key.

Response:

Lamp next to RAG key illuminates, and lamp next to DN goes off.

Note: When MBS Call Back Queuing feature starts, the end user is free to originate or receive calls.

2 Trunk or line becomes idle.

Response:

End user receives notification tone, and lamp next to RAG key flashes.

3 Press an inactive DN key.

Response:

End user receives dial tone.

4 Press RAG key.

Response:

Lamp next to RAG key goes off, and end user receives audible ringing.

Note 1: If a recipient does not answer the RAG notification quickly, the trunk use can occur again. The end user receives busy tone.

Note 2: If a recipient does not answer the RAG notification in predefined time allowed, the following events occur. The lamp next to RAG key extinguishes. The system cancels the call.

5 To cancel MBS Call Back Queuing feature, press RAG key, unless RAG notification occurs.

Response:

The system cancels MBS Call Back Queuing.

Billing

The MBS Call Back Queuing does not affect billing.

Station Message Detail Recording

The MBS Call Back Queuing does not affect Station Message Detail Recording.

Datafilling office parameters

The MBS Call Back Queuing does not affect office parameters.

MBS Call Back Queuing (continued)

Datafill sequence

The tables that require datafill to implement MBS Call Back Queuing appear in the following table. The tables appear in the correct entry order.

Datafill requirements for MBS Call Back Queuing

Table	Purpose of table
NCOS	Network Class of Service. This table contains the NCOS numbers assigned to each attendant console, MDC station, and incoming IBN trunk group. This table contains the NCOS numbers assigned to incoming side of a two-way IBN trunk group, authorization code, and customer group.
CUSTSTN	Customer Group Station Option Table. This table is a requirement for a switching unit with North American translations and the Meridian Digital Centrex (MDC). This table is a requirement for the feature AG0508 (Residential Enhanced Services) (RES). This table lists the station options assigned to each of the customer groups.
IBNRTE	The IBN Route Table. This table contains route lists that a route reference index number identifies.
KSETLINE (Note)	Business Set And Data-Unit Line Assignment Table. This table contains the directory number appearances for business sets and data units.
KSETFEAT (Note)	Business Set and Data-Unit Feature Table. This table lists the line features assigned to the business sets and data units (DU) that appear in table KSETLINE. This table lists the Meridian digital telephone sets and DUs that appear in table IVDINV.
Note: Enter this table through SERVORD. No data entry procedure or example is available. See “SERVORD" for an example of how to use SERVORD to enter data in this table.	

Datafilling table NCOS

Table NCOS (Network Class of Service) contains the NCOS numbers assigned to each attendant console, MDC station, and incoming IBN trunk group. Table NCOS contains the NCOS numbers. The numbers are assigned to the incoming side of a two-way IBN trunk group, authorization code, and customer group. The NCOS defines the specified features or dialing patterns available to the stations, trunks, or consoles in a customer group. For this feature, priority levels identify the CBQ option. The XLAS option is identified as to a translator unique to the NCOS.

Datafill for MBS Call Back Queuing for table NCOS appears in the following table. The fields that apply to MBS Call Back Queuing appear in this table.

MBS Call Back Queuing (continued)

See the data schema section of this document for a description of the other fields.

Datafilling table NCOS (CBQ option)

Field	Subfield or refinement	Entry	Explanation and action
OPTION		See subfield	Option. This field contains subfield NCOSOPTN.
	NCOSOPTN	CBQ	Network Class of Service Options. This subfield specifies the call back queuing option assigned to the NCOS number. Enter CBQ. This subfield contains subfields CBQSP, CBQMP, CBQRA, and CBQOPTS.
	CBQSP	0-3	Call Back Queue Starting Priority Level. This subfield specifies the call back queue starting priority level assigned to the NCOS. Enter a value from 0 to 3.
	CBQMP	0-3	Call Back Queue Maximum Priority Level. This subfield specifies the call back queue maximum priority level assigned to the NCOS. Enter a value from 0 to 3.
	CBQRA	Y or N	Call Back Queue Route Advance. This subfield specifies if a call is to advance to an expensive route after the route advance timer expires. Enter Y or N.
	CBQOPTS	1 or 2	Call Back Queueing Option. This subfield specifies if only cheap routes are searched when activating CBQ or if cheap and expensive routes are searched. Enter 1 for cheap routes only. Enter 2 for cheap and expensive routes.

Datafill example for table NCOS with CBQ option

Sample datafill for table NCOS with option CBQ appears in the following example.

MBS Call Back Queuing (continued)

MAP example for table NCOS

```
TABLE:  NCOS

CUSTGRP  NCOS  NCOSNAME  LSC  TRAFSNO         OPTIONS
_____________________________________________________________

MDCGRP1   0   MDCGRP1NC   0     0       CBQ  1  3  Y  2
                                   XLAS MDCXLA1 NXLA NDGT$
```

Datafilling table NCOS with XLAS option

Datafill for MBS Call Back Queuing for table NCOS with XLAS option appears in the following table. The fields that apply to MBS Call Back Queuing appear in this table. See the data schema section of this document for a description of the other fields.

Datafilling table NCOS with XLAS option (Sheet 1 of 2)

Field	Subfield or refinement	Entry	Explanation and action
OPTION		See subfield	Option. This field contains subfield NCOSOPTN.
	NCOSOPTN	XLAS	Network Class of Service Options. This subfield specifies the call back queuing option assigned to the NCOS number. Enter XLAS. This field contains subfields PRELMXLA, FEATXLA, and DGCOLNM.
	PRELMXLA	NXLA	Preliminary Translator. This subfield specifies the preliminary translator assigned to the NCOS number. If the translator is the same as the preliminary translator assigned in Table CUSTHEAD, enter NXLA. If this condition is not present, enter the one to eight-character name assigned to the NCOS number.

Datafilling table NCOS with XLAS option (Sheet 2 of 2)

Field	Subfield or refinement	Entry	Explanation and action
	FEATXLA	NXLA	Feature Translator. This subfield specifies the feature translator assigned to the NCOS number. If the translator is the same as the feature translator assigned in Table CUSTHEAD, enter NXLA. If this condition is not present, enter the one to eight-character name assigned to the NCOS number.
	DGCOLNM	NDGT	Digit Collection Name. This subfield specifies the digit collection name assigned to the NCOS number. If the digit collection name is the same as the digit collection name assigned in Table CUSTHEAD, enter NDGT. If this condition is not present, enter the one to eight-character name assigned to the NCOS number.

Datafill example for table NCOS with XLAS option

Sample datafill for table NCOS with XLAS option appears in the following example.

MAP example for table NCOS with XLAS option

```
TABLE:  NCOS

 CUSTGRP  NCOS  NCOSNAME  LSC  TRAFSNO         OPTIONS
_____________________________________________________________

 MDCGRP1   0    MDCGRP1NC   0     0      XLAS  1  3  Y  2
                                   XLAS MDCXLA1 NXLA NDGT$
```

Datafilling table CUSTSTN

Table CUSTSTN (Customer Group Station Option) contains the station options assigned to each customer group. Enter data in table CUSTSTN to define the RAGTIM recall timer and the CBQ option.

Datafill for MBS Call Back Queuing for table CUSTSTN appears in the following table. The fields that apply to MBS Call Back Queuing appear in

MBS Call Back Queuing (continued)

this table. See the data schema section of this document for a description of the other fields.

Datafilling table CUSTSTN (CBQ option)

Field	Subfield or refinement	Entry	Explanation and action
OPTION		See subfield	Option. This field contains subfields OPTION, CBQPPT, CBQRAT, CBQNUM, and CBQTYPE.
	OPTION	CBQ	Option Name. This subfield specifies the call back queuing option. Enter CBQ.
	CBQPPT	0 to 15	Call Back Queuing Priority Promotion Timer. This subfield specifies the maximum time, in 1 min increments, that a station queues at a level in the priority promotion queue. Enter a value from 0 to 15. With the timer setting at 0, priority promotion queuing does not occur.
	CB QPAT	0 to 15	Call Back Queuing Route Advance Timer. This subfield specifies the time, in 1 min increments, that cheap routes serve a station with the call back queuing route advance option. Enter a value from 0 to 15. With the timer setting is 0, route advance from cheap to expensive routes does not occur. When the timer setting is from 1 to 15 min, cheap and expensive routes serve the station.
	CBQNUM	1	Call Back Queueing Number Enqueued. This subfield is not a requirement at this time. Enter 1 to satisfy table editor.
	CBQTYPE	TRKONLY	Call Back Queue Types. This subfield specifies the call back queuing types. Enter TRKONLY for IBN trunks, IBNONLY for trunks plus customer group stations, or ALLTYPES for IBN plus POTS lines.

Datafill for Table CUSTSTN with RAGTIM option for this feature appears in the following table. The fields that apply to MBS Call Back Queuing appear

in this table. See the data schema section of this document for a description of the other fields.

Datafilling table CUSTSTN (RAGTIM option)

Field	Subfield or refinement	Entry	Explanation and action
OPTION		See subfield	Option. This field contains subfields OPTION, RAGRECTO, and RAGCANTO.
	OPTION	RAGTIM	Option Name. This subfield specifies the RAGTIM option. Enter RAGTIM.
	RAGRECTO	9 to 32	Ring Again Recall Time-out This subfield specifies the time, in 1 s intervals, that ring code 4 applies for RAG recall. Enter a value from 9 to 32. The default is 8 s.
	RAGCANTO	0 to 30	Ring Again Cancellation Time-out. This subfield specifies the time, in 1 min increments, that the nodal RAG request is to remain active. Enter a value from 0 to 30. If you enter 0, time-out is not a requirement.

Datafill example for table CUSTSTN (RAGTIM option)

Sample datafill for table CUSTSTN appears in the following example.

MAP display example for table CUSTSTN

```
TABLE:  CUSTSTN

CUSTNAME    OPTNAME                                  OPTION
_____________________________________________________________

 MDCGRP1    CBQ                  CBQ  1  3  1  ALLTYPES
 MDCGRP1    RAGTIM               RAGTIM  30  0
```

Datafilling table IBNRTE

Table IBNRTE (IBN Route) specifies if CBQ applies to a route and if the route is expensive.

Datafill for MBS Call Back Queuing for table IBNRTE appears in the following table. The fields that apply to MBS Call Back Queuing appear in

MBS Call Back Queuing (continued)

this table. See the data schema section of this document for a description of the other fields.

Datafilling table IBNRTE

Field	Subfield or refinement	Entry	Explanation and action
RTE		1 to 1023	Route Reference Index. This field specifies the route reference number assigned to the route list. Enter a value from 1 to 1023.
RTELIST		See subfield	Route List. This field contains subfields IBNRTSEL, OHQ, CBQ, EXP, and different subfields that depends on the IBN selector chosen.
	IBNRTSEL	S, N, EOW, OW, QH, or VFG	IBN Route Selector. This subfield specifies the translations selector to take the call to the next stage of translations or call completion. Enter S, N, EOW, OW, QH, or VFG. These selectors specify CBQ, EXP, and different subfields related to this feature.
	OHQ	N	Off-Hook Queuing. This subfield specifies if this route allows off-hook queuing. For this feature, off-hook queuing does not apply. Enter N.
	CBQ	Y or N	Call Back Queuing. This subfield specifies if call back queuing applies to this route. Enter Y or N.
	EXP	Y or N	Expensive. This subfield specifies if this route is expensive. Enter Y or N.
Note: See the data schema section of this document for additional subfields for table IBNRTE. These additional subfields are a requirement when datafill uses other selectors (IBNRTSEL).			

Datafill example for table IBNRTE

Sample datafill for table IBNRTE appears in the following example.

MAP example for table IBNRTE

```
TABLE:  IBNRTE

 RTE        RTELIST
 ____________________________________________________

  1             S  N  Y  N  N  MDCPVT $
```

Tools for verifying translations

The MBS Call Back Queuing does not use tools for verifying translations.

SERVORD

Use SERVORD to enter data in tables KSETLINE and KSETFEAT.

Table KSETLINE (Business Set and Data Unit Line Assignment) contains the directory number appearances for business sets and data units.

Table KSETFEAT (Business Set and Data-Unit Feature) lists the line features assigned to the business sets and data units (DU). The line features appear in table KSETLINE. Table KSETFEAT lists the line features assigned to the Meridian digital telephone sets and DUs that appear in table IVDINV.

Use the Service Order (SERVORD) system command ADO (add option) to assign option RAG.

SERVORD limits

The MBS Call Back Queuing does not have SERVORD limits.

SERVORD prompts

The SERVORD prompts used to assign MBS Call Back Queuing to an existing line appear in the following table.

SERVORD prompts for MBS Call Back Queuing

Prompt	Correct input	Explanation
DN_OR_LEN	7-digit DN or LEN	Specifies the seven digit DN or LEN of the line to add. Enter the DN or LEN.
OPTION	RAG	Enter the option to assign to the line. Enter RAG.

Note: The system enters data in tables KSETLINE and KSETFEAT when assignment of MBS Call Back Queuing occurs using SERVORD.

SERVORD example for implementing MBS Call Back Queuing

You can use the ADO command to add MBS Call Back Queuing to a line. This procedure appears in the following SERVORD example.

MBS Call Back Queuing (end)

SERVORD example for MBS Call Back Queuing in prompt mode

```
> ADO
SONUMBER:   NOW 92  3   27  AM
>
DN_0R_LEN:
> 0 0 11 16
OPTION:
> RAG
OPTION:
> $
```

SERVORD example for MBS Call Back Queuing in no-prompt mode

```
>ADO $ 0 0 11 16 RAG $
```

MBS Call Forward All Calls Feature Key S/W

Ordering codes

Functional group ordering code: MDC00007

Functionality ordering code: does not apply

Release applicability

BCS14 and later versions

Requirements

To operate, MBS Call Forward All Calls Feature Key S/W has the following requirements:

- BAS Generic, BAS00003
- MDC Minimum, MDC00001

Description

The MBS Call Forward All Calls Feature Key S/W allows the system to forward all calls made to the primary directory number (PDN) or a directory number (DN) on a Meridian business set (MBS) automatically to a specified telephone. Four types of call forwarding are available:

- Call forward universal (CFU) allows stations to forward calls to locations that the end user defines inside or outside the customer group. Stations can forward calls to the attendant. The CFU includes call forward intragroup (CFI).
- The CFI allows stations to forward calls to locations in the customer group that the subscriber defines.
- Call forward don't answer (CFD) allows stations to forward incoming calls that the called party does not answer in a specified time. The system forwards these calls to another specified station or to the attendant.

  Note: Table CUSTSTN (Customer Group Station Option) specifies the time allowed for the user to answer the call. See table CUSTSTN in the data schema section of this document for additional information.

- Call forward busy (CFB) allows busy stations to forward all calls to a specified station in the same customer group.

The MBS Call Forward All Calls Feature Key S/W is the same as IBN call forwarding. The MBS Call Forward All Calls Feature Key S/W feature is a subset feature. The assignment of a subset feature to all DNs on an MBS is not a requirement. All types of DN keys can have the MBS Call Forward All Calls Feature Key S/W feature. The types of DN keys that can have this feature

MBS Call Forward All Calls Feature Key S/W (continued)

include multiple appearance directory number (MADN) DNs. MADN DNs have limits. The set of the primary MADN member can have the MBS Call Forward All Calls Feature Key S/W feature applied to the MADN.

The CFU and CFI are the only types of call forwarding that are different from the station feature. The CFU and CFI have a different programming phase.

The EBS Call Forwarding on a Per Key Basis feature allows the system to forward each directory number (DN) on a Meridian business set (MBS) to a different DN. The EBS Call Forwarding on a Per Key Basis feature is an improvement to feature AL0211. The abbreviation for this feature is CFK, or Call Forward Universal per Key.

Operation

To operate MBS Call Forward All Calls Feature Key S/W, the end user performs the following steps:

- You do not need to lift the handset. Press the Call Forward (CFW) key. The associated lamp stays on.
- Dial the DN to which the system must forward the calls.
- Press the CFW key a second time. The associated lamp stays on.
- The system forwards all calls that transfer to the DN of the end users.
- To abandon the programming sequence at any time, press the Release (RLS) key or a DN key.

  Note: If the end user always call forwards to the same DN, you do not need to reprogram the DN each time. Press the CFW key twice to automatically forward to that DN.

To cancel the MBS Call Forward All Calls Feature Key S/W feature, press the CFW key. The associated lamp goes off.

Translations table flow

Descriptions of the MBS Call Forward All Calls Feature Key S/W translations tables appear in the following list:

- The line features assigned to the business sets and data units appear in table KSETLINE (Business Set and Data Unit Line Assignment). These line features also appear in table KSETFEAT (Business Set and Data Unit Feature). The call forward feature assignment is in table KSETFEAT, in field FEATURE as CFX. The CFU (Call Forward Universal), CFI (Call Forward Intragroup), and CFF (Call Forward Fixed) are types of call forward assigned to a line. These types appear in field KVAR (Key

MBS Call Forward All Calls Feature Key S/W (continued)

Variable), subfield CFUIOPT (Call Forwarding Universal Intragroup Fixed Option).

The types of call forward assigned to a line include the following:

- CFB (Call Forward Busy)
- CFD (Call Forward Don't Answer)
- combination CFBD

These types of call forward appear in subfield CFBDOPT. The type of call forwarding determines the additional subfields entered. You must use SERVORD to assign the call forwarding feature.

Table XLANAME (List of Translator Names) controls the addition and deletion of translators in table IBNXLA. When table IBNXLA does not contain an access code for a specified translator, use default data from table XLANAME.

Note: You must enter data in table XLANAME to activate the MBS Call Forward All Calls Feature Key S/W. This entry allows you to assign a translator before you enter data in table IBNXLA.

Table IBNXLA (IBN Translation) stores the data for the digit translation of calls from an IBN station, or an attendant console (AC). Table IBNXLA (IBN Translation) contains the data for the digit translation of calls from an incoming side of a two-way IBN trunk group. Table IBNXLA identifies the access codes to program call forward (CFWP) and cancel call forward (CFWC).

Table CUSTSTN (Customer Group Station Option) contains the station options assigned to each customer group. Option CFDATIM specifies the time the call rings and does not receive an answer before the system forwards the call. Table CUSTSTN contains option CFDATIM. The default is 30 s. If the option is not assigned, the option does not appear in the table.

The MBS Call Forward All Calls Feature Key S/W translation process appears in the following flowchart. The tables that affect the call forward feature appear in the following flowchart and data.

MBS Call Forward All Calls Feature Key S/W (continued)

Table flow for MBS Call Forward All Calls Feature Key S/W

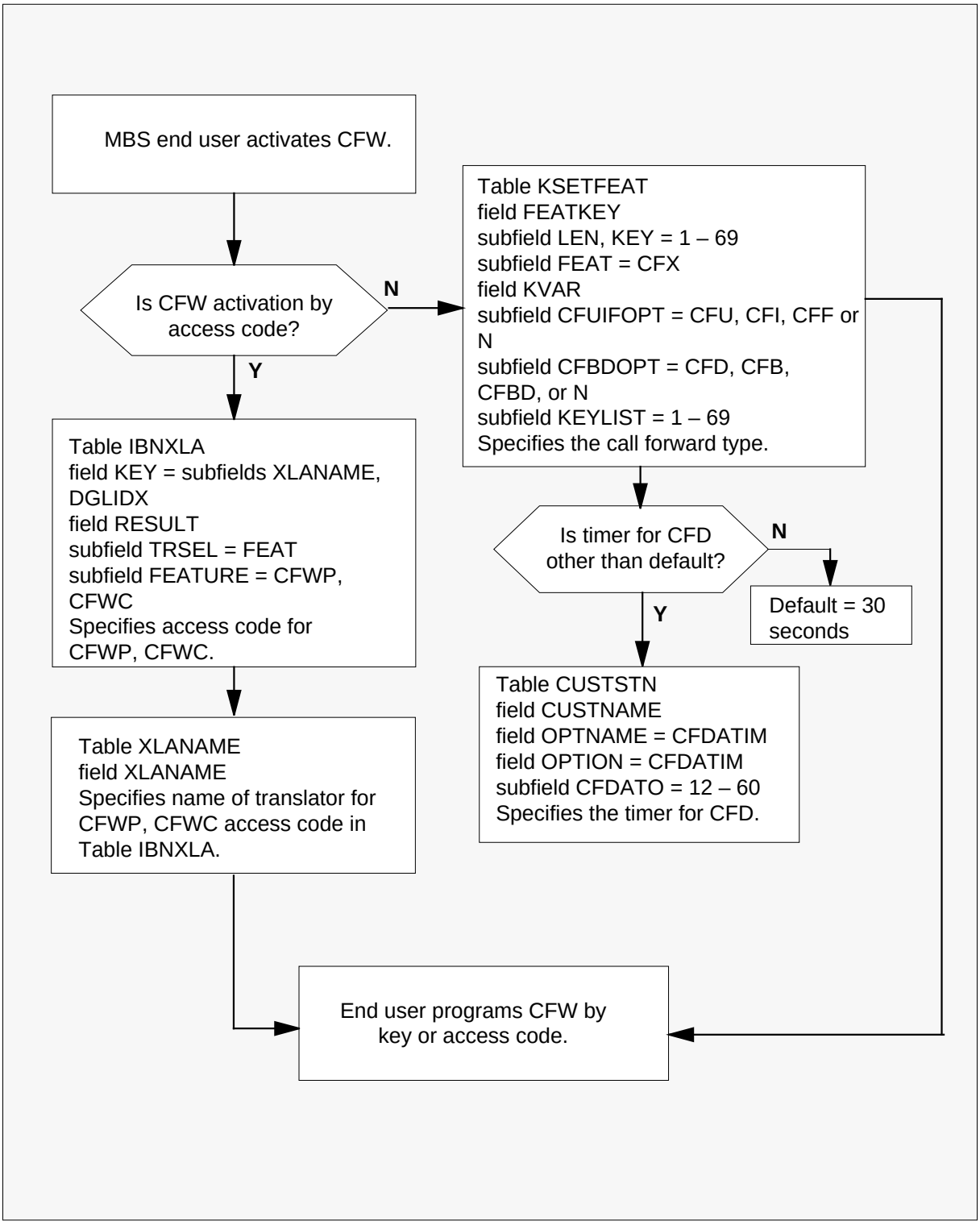

MBS Call Forward All Calls Feature Key S/W (continued)

The datafill content for the flowchart appears in the following table.

Datafill example for MBS Call Forward All Calls Feature Key S/W

Datafill table	Example data
KSETFEAT	HOST 0 0 3 08 6 CFX CFX CFU N N N $
IBNXLA	CUSTXLA 138 FEAT Y N N CFWP
	CUSTXLA 139 FEAT Y N N CFWC
CUSTSTN	MDCGRP1 CFDATIM CFDATIM 16

Limits

The following limits apply to MBS Call Forward All Calls Feature Key S/W:

- When the system activates MBS Call Forward All Calls Feature Key S/W, calls can originate from any DN on the set.
- When MBS Call Forward All Calls Feature Key S/W is active, calls to DNs that other calls share can ring on the set.
- When CFU and CFI are programmed, call forwarding applies to the DN keys that have the feature assigned. Access codes from DNs that do not have the feature assigned cannot program the feature.
- Programming can occur if active DNs are not available on the set. Programming can occur if the MBS Call Forward All Calls Feature Key S/W is not active.
- The RPA tones stop for calls on a specified MBS. The MBS has Repeated Alert (RPA) for MBS and MBS Call Forward All Calls Feature Key S/W active. The tones stop when the CFD timer expires and the system forwards calls.
- Feature code access applies when the feature key is not available.

Interactions

The interactions between MBS Call Forward All Calls Feature Key S/W and other functionalities appear in the following paragraph.

For BCS31 and later versions, the Call Forwarding of Call Waiting Calls feature (NC0025) allows you to forward call waiting calls. The system can forward call waiting calls if the called party does not answer the calls in a specified time frame. See “Call Forwarding of Call Waiting Calls" for additional information.

MBS Call Forward All Calls Feature Key S/W (continued)

You can use the CF feature key to access Call Forward Programming. You can attempt to program to an Equal Access carrier. When these conditions occur, the system does not use the PIC assigned to any DN key. The feature key does not have access to any DN information during the programming attempt. Users must dial the PIC access code with programmed digits or use a Customer Group PIC through translations. Table IBNXLA NET selector with an EA option is an example of a Customer Group PIC. An office-wide parameter in table OFCENG, DEFAULT_CARRIER_OR_TREAT can provide a PIC. A pic is available when you dial none during the CF programming attempt.

Activation/deactivation by the end user

The MBS Call Forward All Calls Feature Key S/W does not require activation or deactivation by the end user.

Billing

The MBS Call Forward All Calls Feature Key S/W does not affect billing.

Station Message Detail Recording

The MBS Call Forward All Calls Feature Key S/W does not affect Station Message Detail Recording.

Datafilling office parameters

The office parameters that MBS Call Forward All Calls Feature Key S/W uses appear in the following table. See *Office Parameters Reference Manual* for additional information about office parameters.

Office parameters by MBS Call Forward All Calls Feature Key S/W

Table name	Parameter name	Explanation and action
OFCENG	CFW_EXT_BLOCKS	Specifies the call forwarding extension block. Enter a value from 0 to 32,767. The default value is 10.
OFCOPT	IBN_CFW	Specifies if the call forwarding feature is available for POTS data lines or for all IBN lines, business sets, and IBN and POTS data lines. The POTS data lines that can have the call forwarding feature are in the POTS environment. The POTS data lines are in the IBN environment. Enter Y or N. The default value is N.

MBS Call Forward All Calls Feature Key S/W (continued)

Datafill sequence

The tables that require datafill to activate MBS Call Forward All Calls Feature Key S/W appear in the following table. The tables appear in the correct entry order.

Datafill tables required for MBS Call Forward All Calls Feature Key S/W

Table	Purpose of table
CUSTSTN	Customer Group Station Option. This table contains the station options assigned to each customer group.
IBNXLA	IBN Translation. This table contains the data for the digit translation of calls from an IBN station. This table contains an attendant console (AC), or an incoming side of a two-way IBN trunk group.
KSETFEAT	***Note:*** Use SERVORD to enter data in this table. This table does not provide a procedure to enter data. Refer to “SERVORD" for an example of how to use SERVORD to enter data in this table.

Datafilling table CUSTSTN

Table CUSTSTN (Customer Group Station Option) contains the station options assigned to each customer group. You must enter data in table CUSTSTN to define the answer time-out interval for the CFD feature.

The datafill for MBS Call Forward All Calls Feature Key S/W for table CUSTSTN appears in the following table. The fields that apply directly to MBS Call Forward All Calls Feature Key S/W appear. For a description of the other fields, see the data schema section of this document.

Datafilling table CUSTSTN (Sheet 1 of 2)

Field	Subfield or refinement	Entry	Explanation and action
OPTNAME		CFDATIM	Option Name. This field specifies the CFD time-out option. Enter CFDATIM.

MBS Call Forward All Calls Feature Key S/W (continued)

Datafilling table CUSTSTN (Sheet 2 of 2)

Field	Subfield or refinement	Entry	Explanation and action
OPTION		CFDATIM see subfield	Option Name. This field specifies the CFD time-out option. This field contains subfield CFDATO. Enter CFDATIM.
	CFDATO	12 - 60	Call Forwarding Don't Answer Timing. This subfield specifies the timing period in increments of 1 s for the CFD feature. Enter 12 - 60 s. The system stores a default value of 30 s internally. The default value appears if the option is assigned.

Datafill example for table CUSTSTN

Sample datafill for table CUSTSTN appears in the following table.

MAP example for table CUSTSTN

```
TABLE:  CUSTSTN

CUSTNAME        OPTNAME                          OPTION
_____________________________________________________________

MDCGRP1         CFDATIM                       CFDATIM 16
```

Datafilling table IBNXLA

Table IBNXLA (IBN Translation) contains the data for the digit translation of calls from the following:

- an IBN station
- an attendant console (AC)
- an incoming side of a two-way IBN trunk group

You must enter data in table IBNXLA to assign the call forwarding access codes. You must enter data for the call forwarding programming code. You must make an entry for the call forwarding cancel code.

The datafill for MBS Call Forward All Calls Feature Key S/W for table IBNXLA appears in the following table. The fields that apply directly to MBS

MBS Call Forward All Calls Feature Key S/W (continued)

Call Forward All Calls Feature Key S/W appear. For a description of the other fields, see the data schema section of this document.

Datafilling table IBNXLA (call forwarding programming)

Field	Subfield or refinement	Entry	Explanation and action
KEY		See subfield	Key. This field contains subfields XLANAME and DGLIDX.
	XLANAME	1-8	Translator Name. This subfield specifies the name assigned to the translator in table XLANAME. Enter a 1- to 8-character name.
	DGLIDX	0-9	Digilator Index. This subfield specifies the digit or digits assigned as an ambiguous code. Enter any value from 0 through 9. Enter any letter from B to C or B to F. The value set in field MAXDIG in table XLANAME determines the value in this entry.
RESULT		See subfield	Result. This field contains subfields TRSEL, ACR, SMDR, and FEATURE.
	TRSEL	See subfield	Translation Selector. This subfield specifies the translation selector. Enter FEAT.
	ACR	See subfield	Account Code Entry. This subfield specifies if all calls to the feature access code require an account code. Enter Y or N.
	SMDR	Y or N	Station Message Detail Recording. This subfield specifies if the system records all calls from a customer group station. This subfield specifies if the system records calls from an AC to any station in the block of station numbers. Enter Y or N.
	FEATURE	CFWP	Feature. This subfield specifies the name of the feature. Enter CFWP.

MBS Call Forward All Calls Feature Key S/W (continued)

The datafill procedure for call forwarding cancel appears in the following table.

Datafilling table IBNXLA (call forwarding cancel)

Field	Subfield or refinement	Entry	Explanation and action
KEY		See subfield	Key. This field contains subfields XLANAME and DGLIDX.
	XLANAME	1-8	Translator Name. This subfield specifies the name assigned to the translator in table XLANAME. Enter a 1- to 8-character name.
	DGLIDX	0-9	Digilator Index. This subfield specifies the digit or digits assigned as an ambiguous code. Enter any value from 0 through 9, and any letter from B to C or B to F. The value in field MAXDIG in table XLANAME determines the value in this entry.
RESULT		See subfield	Result. This field contains subfields TRSEL, ACR, SMDR, and FEATURE.
	TRSEL	FEAT	Translation Selector. This subfield specifies the translation selector. Enter FEAT.
	ACR	Y or N	Account Code Entry. This subfield specifies if an account code is a requirement for all calls to the feature access code. Enter Y or N.
	SMDR	Y or N	Station Message Detail Recording. This subfield specifies if the system records all calls from a customer group station or AC to any station in the block of station numbers. Enter Y or N
	FEATURE	CFWC	Feature. This subfield specifies the name of the feature. Enter CFWC.

Datafill example for table IBNXLA

Sample datafill for table IBNXLA appears in the following example.

MBS Call Forward All Calls Feature Key S/W (continued)

MAP example for table IBNXLA

```
TABLE:  IBNXLA

KEY                                                  RESULT
_____________________________________________________________

CUSTXLA  138                    FEAT  Y  N  N        CFWP
CUSTXLA  139                    FEAT  Y  N  N        CFWC
```

Tools for verifying translations

The MBS Call Forward All Calls Feature Key S/W does not use tools for verifying translations.

SERVORD

Use the Service Order System (SERVORD) command ADO (add option) to assign option CFU. Use the DEO (delete option) command to remove option CFU. Option CFU allows a station end user to reroute incoming calls to another telephone number. The number can be in the MDC customer group, the local calling area, or in a foreign exchange. The call can forward to an attendant.

SERVORD limits

MBS Call Forward All Calls Feature Key S/W does not have SERVORD limits.

SERVORD prompts

The SERVORD prompts used to assign MBS Call Forward All Calls Feature Key S/W to a current line appear in the following table.

SERVORD prompts for MBS Call Forward All Calls Feature Key S/W (Sheet 1 of 2)

Prompt	Valid input	Explanation
DN_OR_ LEN	7-digit DN or LEN	Specifies the 7-digit DN or LEN of the line to change. Enter the DN or LEN.
OPTKEY	1 to 69	Indicates the key on an MBS that has an option. Enter a value from 1 to 69.
OPTION	CFU	Indicates the name of the option. Enter CFU.

MBS Call Forward All Calls Feature Key S/W (end)

SERVORD prompts for MBS Call Forward All Calls Feature Key S/W (Sheet 2 of 2)

Prompt	Valid input	Explanation
KEYLIST	1 to 69	Specifies the key numbers of the DNs to which an option applies. Enter a value from 1 to 69.
OVRDACR	Y, N	Specifies if the override for account code is a requirement. Enter Y or N.

Note: The system automatically enters data in table KSETFEAT when you use SERVORD to assign MBS Call Forward All Calls Feature Key S/W.

SERVORD example for implementing MBS Call Forward All Calls Feature Key S/W

You can use the ADO command to add MBS Call Forward All Calls Feature Key S/W to a line. The addition of MBS Call Forward All Calls Feature Key S/W appears in the following SERVORD example.

SERVORD example for MBS Call Forward All Calls Feature Key S/W in prompt mode

```
SO:
> ADO
SONUMBER:   NOW 87  10  10  PM
>
DN_OR_LEN:
> 2 1 2 11
OPTKEY:
> 7
OPTION:
> CFU
OVRDACR:
> N
KEYLIST:
> $
OPTKEY:
> $
```

SERVORD example for MBS Call Forward All Calls Feature Key S/W in no-prompt mode

```
>ADO  $  2 1 2 11  7  CFU  N  $  $
```

MBS Call Park

Ordering codes

Functional group ordering code: MDC00007

Functionality ordering code: does not apply

Release applicability

NA011 and later versions

Requirements

The MBS Call Park does not have requirements.

Description

The MBS Call Park allows Meridian business set (MBS) end users to park a call against the directory number (DN) of MBS end users. The end users can retrieve the parked call from any station. To retrieve the call, the end user requests call park retrieve. The end user dials the DN of the station that parked the call.

Table CUSTHEAD (Customer Group Head) identifies option Call Park with an audio source for a customer group. Option LMOH (Line Music on Hold) defines multiple audio sources across one customer group. The assignment of option LMOH is made through the Service Order System (SERVORD). The addition of option LMOH to a business set appears in table KSETFEAT (Business Set and Data Unit Feature). The assignment of option LMOH to a business set with option Call Park defines a music source specific for the line. The customer group audio source applies for option Call Park if the assignment of option LMOH is not on the line.

The audio source defaults to the one in the table CUSTHEAD in the occurrences that follow:

- The assignment of option LMOH is on a line, but no entry for LMOH is input in table AUDIO.
- Option LMOH is not on a line.

Operation

The MBS Call Park feature has two parts. The parts are call park setup and call park retrieve.

MBS Call Park (continued)

Call park setup

The end user presses a dedicated Call Park key or dials an access code to activate call park setup. If the end user uses a dedicated key, the end user performs the actions as follows:

- press the Call Park key
- waits for confirmation tone
- waits for the lamp next to the Call Park key to illuminate
- replaces the handset in the cradle
- presses the Release key or the Call Park key

If the end user uses an access code, the end user performs the actions as follows:

- dials the call park access code
- receives confirmation tone that the system can park the call
- replaces the handset in the cradle

The parked party hears audible ringing. After the system parks the call, the system starts the call park recall timer. The system calls the party on hold again when the timer expires.

Call park retrieve

Any IBN station or MBS can retrieve parked calls. To retrieve a call parked using a dedicated key, the end user performs the actions as follows:

- presses the Call Park key
- receives dial tone
- receives special dial tone
- dials the DN of the station that parked the call

To retrieve a call parked using the call park access code, the end user performs the actions as follows:

- dials the call park retrieve access code
- dials the DN of the station that parked the call

Translations table flow

The MBS Call Park translations tables appear in the following list:

- Table AUDIO (Audio Interlude) defines the audio source broadcasts provided for exact features. Enter table AUDIO if the feature Call Park

provides music or an announcement when the system parks the call. Multiple audio sources for a customer group require multiple entries in table AUDIO.

- Line functionalities appear in table KSETFEAT (Business Set and Data Unit Feature). Assignment of line functionalities to the business sets and data units occurs in table KSETLINE (Business Set and Data Unit Line Assignment). To park or retrieve calls, some MBS end users press a key. For these users, enter data in table KSETFEAT to assign the Call Park key. Field FEATKEY identifies the line equipment number (LEN) and key assignment for the MBS Call Park functionality. The MBS Call Park functionality is subfield FEAT and subfield FEATURE. Assignment of the MBS Call Park occurs through SERVORD.
- Table XLANAME (List of Translator Names) controls the addition and deletion of translators in Table IBNXLA (IBN Translation). The system tries to find an access code in Table IBNXLA for a specific translator. When the system cannot find the access code, the system uses the default data from Table XLANAME.

  Note: The MBS Call Park requires that you enter data in table XLANAME to assign a translator. You must enter data in table XLANAME before you enter data in table IBNXLA.

- Table IBNXLA (IBN Translation) stores the data for the digit translation of calls from different locations. These calls can be from an IBN station, an attendant console (AC) or incoming side of a two-way IBN trunk group. For the MBS end user that dials an access code to park or retrieve a call, enter data in table IBNXLA. This data assigns the access codes.

The MBS Call Park translation process appears in the flowchart as follows. The tables accessed during call processing appear in the flowchart and the data. During call processing, the end user activates MBS Call Park. The end user presses a dedicated key or dials an access code for activation.

MBS Call Park (continued)

Table flow for MBS Call Park

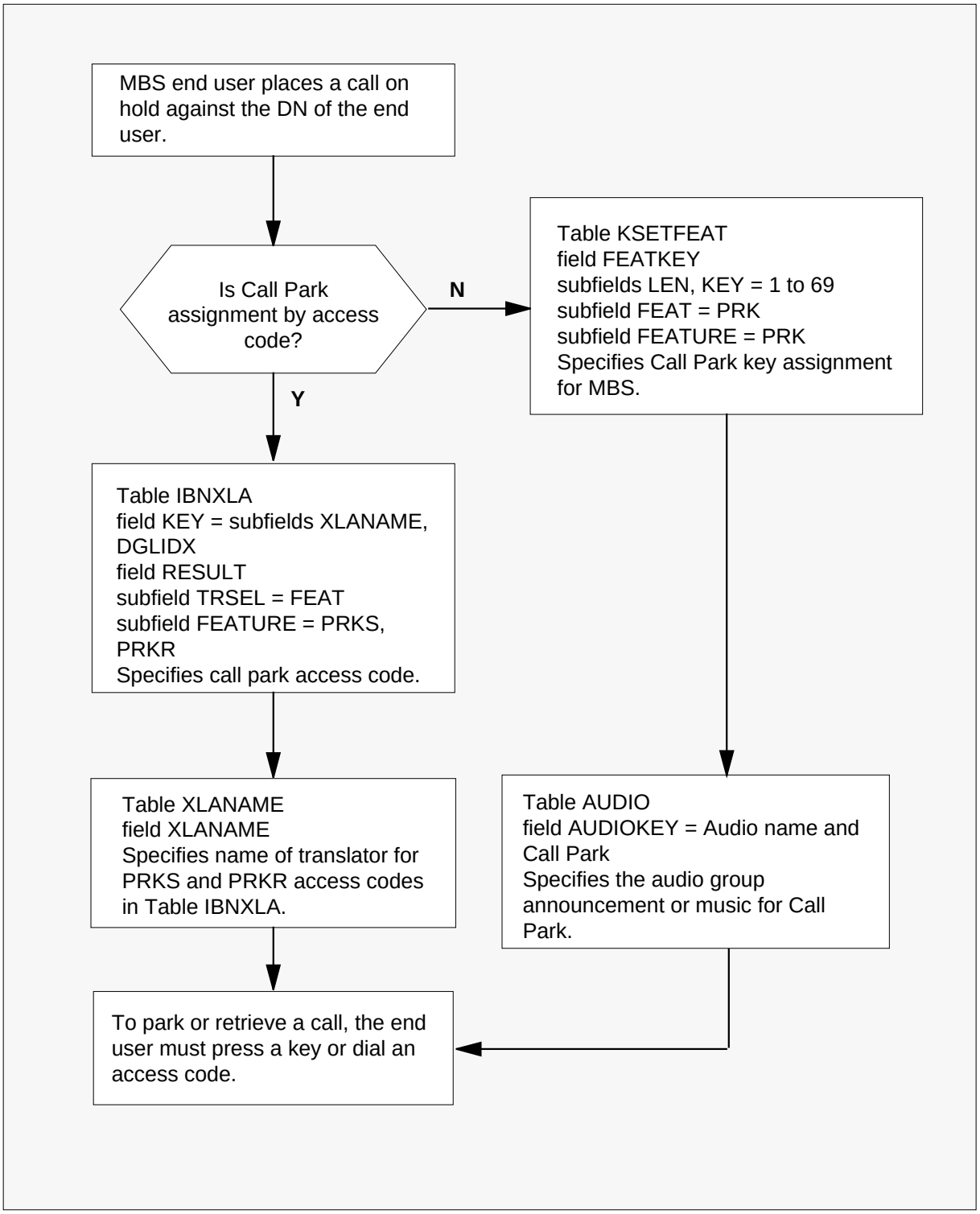

MBS Call Park (continued)

The datafill content used in the flowchart appears in the table as follows.

Datafill example for MBS Call Park

Datafill table	Example data
AUDIO	AUDIO1 CPARK (ANN Y A REGVCA) (MUSIC REGMUSIC120) (ANN Y 2 REGVCA) (SILENCE 0) $
	AUDIO2 CPARK MUSIC MUSICCLLI 30 $
KSETFEAT	HOST 00 0 03 08 6 PRK PRK $
IBNXLA	CUSTXLA 42 FEAT N N N PRKS
	CUSTXLA 43 FEAT N N N PRKR

The Call Park translations process appears in the flowchart that follows. The data shows the assignment of option LMOH with an audio source for option Call Park (AUDIO2). The lines without option LMOH default to the audio source for the customer group (AUDIO1).

MBS Call Park (continued)

Table flow for MBS Call Park

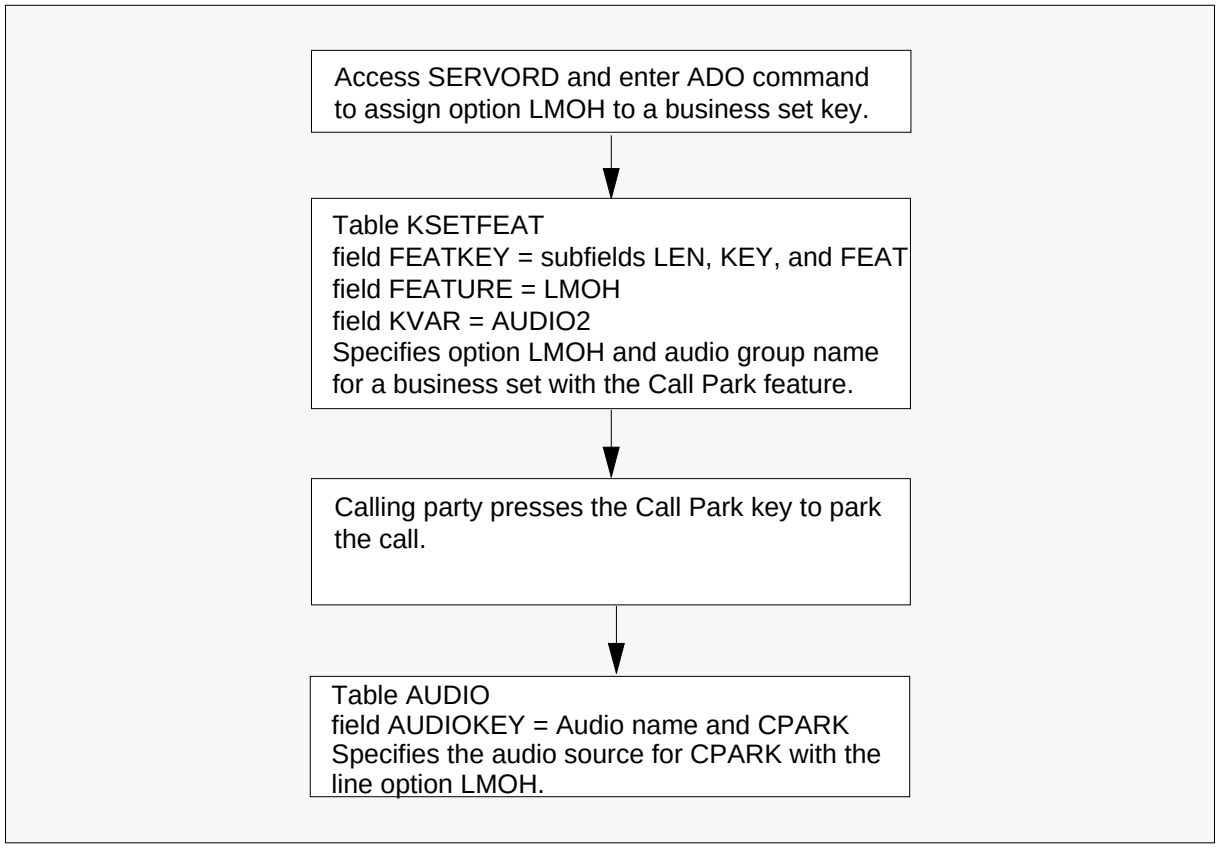

The following table lists the datafill content used in the flowchart.

Datafill table	Example data
KSETFEAT	HOST 00 0 00 01 0 LMOH LMOH AUDIO2
AUDIO	AUDIO1 CPARK (ANN Y A REGVCA) (MUSIC REGMUSIC120) (ANN Y 2 REGVCA) (SILENCE 0) $
	AUDIO2 CPARK MUSIC MUSICCLLI 30 $

Limitations and restrictions

The following limits apply to MBS Call Park:

- The MBS Call Park does not work with incoming or outgoing operator trunks.
- The system can park one call against a specific DN appearance at a time.

- A limit is set on the number of calls the system can park at the same time against a customer group.
- The system prevents attempts to park a call if the necessary system software resources are not available.
- Calls that require an operator position or an AC prevent call park attempts.
- Calls with the calling line identify, with flash or malicious call hold functionalities, active prevent call park attempts.
- The station that retrieves a parked call is in the same customer group as the station that parked the call.
- The system cannot park a call that uses Six Port Conference. A conference call cannot retrieve a parked call that the system established with six point conference circuits.

Interactions

The interactions between MBS Call Park and other functionalities appear in the paragraphs that follow.

Attendant Busy Verification

An attendant cannot busy verify a line with MBS Call Park active.

Attendant Camp-on

An attendant cannot activate the camp-on functionality on a call that the system parked.

Call Forwarding

The system does not forward call park recalls.

Call Pickup

The user can access a call park recall with the use of the Call Pickup (CPU) functionality. The system retrieves the call after this action.

Call Waiting

The Call Waiting (CWT) feature allows a call to wait against an MBS DN involved in a call. The system activated MBS Call Park on this specified call. If the user presses the CWT key to access the waiting call, the system holds the original call. The system cancels the call park request. The system does not call wait the call park recalls to the parking station.

MBS Call Park (continued)

Calling Line Identify with Flash, Malicious Call Hold

The user cannot always activate Calling Line Identify with Flash and the Malicious Call Hold features on a call. The user cannot activate these features on a call that the system parked.

Do Not Disturb, Make Set Busy

The user can activate the Do Not Disturb (DND) feature or the Make Set busy (MSB) feature on a station. These activations do not prevent call park recalls to that station.

Executive Busy Override

The system prevents attempts by incoming calls to activate the executive busy override (EBO) feature on a parked call. The calling party receives reorder tone.

Multiple Appearance Directory Number

Multiple Appearance Directory Number (MADN) groups have access to the MBS Call Park feature. These MADN groups have single call arrangement or multiple call arrangement.

Private Business Lines

The MBS Call Park does not apply to Private Business Lines (PBL).

Ring Again

The activation of MBS Call Park on a call does not change Ring Again requests. These requests are from other parties on the parking or the parked party.

Straight Intercom, Group Intercom

The system deactivates the MBS Call Park feature on Straight Intercom calls. This action occurs because intercom lines do not have a DN against which the system can park the call. The Group Intercom feature allows call park requests.

Three-Way Calling, Call Transfer

The system disables call park store on calls in which Three-Way Calling (3WC) or Call Transfer (CXR) is in effect. The user can retrieve a parked call on the second leg of a three-way call. The user must press the Call Park key and dial the park DN immediately after the user presses the 3WC key.

Activation/deactivation by the end user

Activation

The end user activates and deactivates the MBS Call Park feature. A user on an established connection can activate MBS Call Park. The user must use an MBS when MBS Call Park is available on that line.

Two activation methods are available from an MBS:

- The user presses the MBS Call Park key.
- The user presses the Three-Way Call/Call Transfer key and the user enters the Call Park access code.

For example, party A must park an established call with party B. Party A presses the MBS Call Park key. The system tries to park the call against the DN that party A entered. The user hears a confirmation tone. The system turns the lamp for the Call Park or the Three-way Call/Call Transfer key on for a brief period of time. The key pressed to start the call park operation determines which lamp lights. Party B receives audible ringing or an optional audio announcement. The system turns off the MBS Call Park key and DN key for Party A. The system starts the MBS Call Park timer.

If the system cannot park the call against the DN that party A supplied, party A receives five seconds of treatment. The system establishes the voice connection between parties A and B again.

Retrieval

Retrieval originates at the station of party A. Party A performs one of the two actions that follows:

- Party A presses the Call Park key. Party A dials the DN of the station against which the system parked the call.
- Party A presses the Three-Way Call/Call Transfer key. Party A dials the MBS Call Park retrieval code. Party A dials the DN of the station against which the system parked the call.

The system accepts the parked party, party B, in voice connection with party A. This action does not occur if party B goes on-hook.

Retrieval can occur when the call park timer times-out and the system calls party A again. If party A picks up the call back, the system establishes voice connection with party B again. If party A ignores the call back, a third party can intercept the call through the call pickup (CPU) functionality. This action must occur when that functionality is active on the line. The station for party A can be busy when the call back occurs. In this event, the system resets the

MBS Call Park (continued)

call park timer to the original delay. Party B remains parked. This cycle of call back, busy, reset-timer cycle occurs until the parked party goes on-hook. This cycle also ends if the time-out occurs when the station of party A is idle.

Deactivation

Deactivation of MBS Call Park occurs when the parked party, party B, goes on-hook.

Billing

The MBS Call Park does not affect billing.

Station Message Detail Recording

The MBS Call Park does not affect Station Message Detail Recording.

Datafilling office parameters

The MBS Call Park does not affect office parameters.

MBS Call Park (continued)

Datafill sequence

The tables that require datafill to implement MBS Call Park appear in the table that follows. The tables appear in the correct entry order.

MBS Call Park (continued)

Datafill requirements for MBS Call Park (Sheet 1 of 2)

Table	Purpose of table
AUDIO	Audio Interlude. This table defines the audio source broadcasts for Integrated Business Network (IBN) or business set audio groups and features. The broadcasts include announcement, music, silence, or ringing,
Note 1: The user enters data in this table through SERVORD. This document does not provide a datafill procedure or example. See “SERVORD" for an example of how to use SERVORD to enter data in this table. ***Note 2:*** Two methods to assign MBS Call Park to a dedicated key in table KSETFEAT are available. Two methods to assign the functionality to an access code in table IBNXLA are available.	

MBS Call Park (continued)

Datafill requirements for MBS Call Park (Sheet 2 of 2)

Table	Purpose of table
KSETFEAT (Note 1, Note 2)	Business Set and Data-Unit Feature table. The following items appear in this table: • the line functionalities assigned to the business sets and data units (DU) that appear in table KSETLINE • the line functionalities assigned to the Meridian digital telephone sets and DUs that appear in table IVDINV
IBNXLA(Note 2)	IBN Translation. This table contains the access codes for the MBS Call Park feature
Note 1: The user enters data in this table through SERVORD. This document does not provide a datafill procedure or example. See “SERVORD" for an example of how to use SERVORD to enter data in this table. ***Note 2:*** Two methods to assign MBS Call Park to a dedicated key in table KSETFEAT are available. Two methods to assign the functionality to an access code in table IBNXLA are available.	

MBS Call Park (continued)

Datafilling table AUDIO

Table AUDIO (Audio Interlude) defines the audio source broadcasts for IBN or MBS features. Data entry of table AUDIO must occur if MBS Call Park provides music or an announcement to option Call Park.

The customer group can have three units and each unit can have its audio source with the assignment of LMOH. The separate audio sources requires additional tuples to table AUDIO.

Datafill for MBS Call Park for table AUDIO appears in the table that follows. The fields that apply to MBS Call Park appear in this table. See the data schema section of this document for a description of the other fields.

Datafilling table AUDIO (Announcement)

Field	Subfield	Entry	Description and action
AUDIOKEY		see subfield	Audio Key. This field contains subfields GROUP and FTRINDEX. This feature affects only subfield FTRINDEX.
	GROUP	AUDIO1 to AUDIO512	Group. This subfield specifies the audio group name. Enter an audio group name from AUDIO1 to AUDIO512.
	FTRINDEX	CPARK	Feature Index. This subfield specifies the feature that requires a broadcast. Enter CPARK.
	CHOICE	ANN	Audio Choice. This subfield specifies the audio choice. Enter ANN for announcement. ***Note:*** If you enter ANN for CHOICE, subfields AR, CYCLES, and ANNCLLI require datafill.
	AR	Y or N	Audible Ringing. This subfield specifies if the end user requires audible ringing before the announcement reaches the start of the cycle. Enter Y or N. If the end user requires a silence, enter N.
	CYCLES	1 to 30	Announcement Cycles. This subfield specifies the number of announcement cycles required. The correct range is from 1 to 30.
	ANNCLLI	see subfield	Announcement CLLI. This field specifies the common language location identifier (CLLI) of the announcement trunk that must appear in table ANN and table ANNMEMS.

MBS Call Park (continued)

If the system provides music, data entry of subfields CHOICE, MUSICLLI, and TIME must occur as follows.

Datafilling table AUDIO

Field	Subfield	Entry	Description and action
AUDIOKEY		see subfield	Audio Key. This field contains subfields GROUP and FTRINDEX. This feature affects only subfield FRTINDEX.
	GROUP	AUDIO1 to AUDIO512	Group. This subfield specifies the audio group name. Enter an audio group name from AUDIO1 to AUDIO512.
	FTRINDEX	CPARK	Feature Index. This subfield specifies the feature that requires a broadcast. Enter CPARK.
	CHOICE	MUSIC	Audio Choice. This subfield identifies the audio choice. Enter MUSIC for music. ***Note:*** If you enter MUSIC for CHOICE, subfields MUSICLLI and TIME require datafill.
	MUSICLLI	see subfield	Music CLLI. This subfield specifies the CLLI of the audio trunk. This CLLI must appear in table ANN and table ANNMEMS.
	TIME	0 to 1800	Time. This subfield identifies the delay threshold time. The correct range is from 0 to 1800. The value 0 provides continuous music. This value is only correct as the last entry.

Datafill example for table AUDIO

Sample datafill for table AUDIO appears in the example that follows. Multiple audio sources for a customer group requires additional entries in table AUDIO. A line in the customer group with the option LMOH uses the AUDIO2 audio source. The AUDIO1 audio source is the default for the lines in the customer group without option LMOH.

MBS Call Park (continued)

MAP example for table AUDIO

```
        AUDIOKEY
                                                        ROUTES
_____________________________________________________________
AUDIO1   CPARK
(ANN Y 1 REGVCA)(MUSIC REGMUSIC120)(ANN Y 2
REGVCA)(SILENCE 0) $

AUDIO2  CPARK (MUSIC RRMUSICLLI 30) $
```

Datafilling table IBNXLA

Table IBNXLA (IBN Translation) contains the access codes for MBS Call Park. Two entries are a requirement in table IBNXLA. One entry is for the call park setup access code. One entry is for the call park retrieve access code.

Datafill for MBS Call Park for table IBNXLA appears in the table as follows. The fields that apply to MBS Call Park appear in this table. See the data schema section of this document for a description of the other fields.

Datafilling table IBNXLA (Call Park setup) (Sheet 1 of 2)

Field	Subfield	Entry	Explanation and action
KEY		see subfield	Key. This field contains subfields XLANAME and DGLIDX.
	XLANAME	1 to 8 characters	Translator Name. This subfield specifies the name assigned to the translator. Enter the 1- to 8-character name.
	DGLIDX	1 to 18 digits	Digilator Index. This subfield specifies the access code. Enter the 1- to 18-digit number assigned as the access code.
RESULT		see subfield	Result. This field contains subfield TRSEL.
	TRSEL	FEAT	Translations Selector. This subfield specifies the translations selector for use. Enter FEAT. ***Note:*** If the entry in TRSEL is FEAT, enter data in subfields ACR, SMDR, and FEATURE.
	ACR	Y or N	Account Code Entry. This subfield specifies if an account code is a requirement. Enter Y or N.

MBS Call Park (continued)

Datafilling table IBNXLA (Call Park setup) (Sheet 2 of 2)

Field	Subfield	Entry	Explanation and action
	SMDR	Y or N	Station Message Detail Recording. This subfield specifies if SMDR is a requirement. Enter Y or N.
	FEATURE	PRKS	Feature. This subfield specifies the functionality assigned to a line. Enter PRKS.

Datafilling table IBNXLA (Call Park retrieve)

Field	Subfield	Entry	Explanation and action
KEY		see subfield	Key. This field contains subfields XLANAME and DGLIDX.
	XLANAME	1 to 8	Translator Name. This subfield specifies the name assigned to the translator. Enter the 1- to 8-character name.
	DGLIDX	1 to 18	Digilator Index. This subfield specifies the access code. Enter the 1- to 18-digit number assigned as the access code.
RESULT		see subfield	Result. This field contains subfield TRSEL.
	TRSEL	FEAT	Translations Selector. This subfield specifies the translations selector for use. Enter FEAT.
		see subfield	If the entry in TRSEL is FEAT, enter data in subfields ACR, SMDR, and FEATURE.
	ACR	Y or N	Account Code Entry. This subfield specifies if an account code is a requirement. Enter Y or N.
	SMDR	Y or N	Station Message Detail Recording. This subfield specifies if SMDR is a requirement. Enter Y or N.
	FEATURE	PRKR	Feature. This subfield specifies the functionality assigned to a line. Enter PRKR.

Datafill example for table IBNXLA

Sample datafill for table IBNXLA appears in the following example.

MBS Call Park (continued)

MAP example for table IBNXLA

```
TABLE:  IBNXLA

KEY                                                  RESULT
_____________________________________________________________

CUSTXLA  42                          FEAT  N  N  N   PRKS
CUSTXLA  43                          FEAT  N  N  N   PRKR
```

Translations verification tools

The MBS Call Park does not use Translations verification tools.

SERVORD

Use SERVORD to enter data in table KSETFEAT.

Table KSETFEAT (Business Set and Data-Unit Feature) lists some line functionalities. These functionalities include the line functionalities assigned to the business sets and data units (DU) that appear in table KSETLINE. These functionalities include the line functionality assigned to the Meridian digital telephone sets and DUs that appear in table IVDINV.

Assign option PRK with the Service Order System (SERVORD) ADO (add option) command. Use the DEO (delete option) command to remove option PRK. Option PRK allows a business set end user to park a call against the DN of the business set end user. The user can retrieve the parked call from any station. When the system parks the call, the end user can originate and receive calls on that DN.

SERVORD limitations and restrictions

The MBS Call Park does not have SERVORD limitations and restrictions.

SERVORD prompts

The SERVORD prompts used to assign MBS Call Park to a line appear in the table as follows.

SERVORD prompts for MBS Call Park

Prompt	Valid input	Explanation
DN_OR_LEN	7-digit DN or LEN	Describes the seven-digit DN or LEN of the line to change. Enter the DN or LEN.
OPTKEY	1 to 69	Option key indicates the key on a MBS to which the user assigns an option. Enter a value from 1 to 69.
OPTION	PRK	Option indicates the name of the option. Enter PRK.

Note: The system enters data in table KSETFEAT when the you assign MBS Call Park with SERVORD.

SERVORD example for MBS Call Park

Assignment of MBS Call Park option PRK to a current line appears in the SERVORD example as follows. The operating company personnel assigns the feature with the ADO command.

SERVORD example for MBS Call Park in prompt mode

```
SO:
> ADO
SONUMBER:   NOW 87  10  10  PM
>
DN_OR_LEN:
> 2 1 2 11
OPTKEY:
> 7
OPTION:
> PRK
OPTKEY:
> $
```

SERVORD example for MBS Call Park in no-prompt mode

```
>ADO  $  2 1 2 11  7  PRK  $
```

MBS Call Park (end)

SERVORD prompts

The following table shows the SERVORD prompts to assign LMOH to a line.

SERVORD prompts for LMOH

Prompt	Valid input	Explanation
OPTION	LMOH	Option defines the option assignment for the line.
AUDIOGRP	AUDIO1 to AUDIO512	Audio group defines the audio group name.

Note: The system enters data in table KSETFEAT when assignment of LMOH occurs to a business set through SERVORD. The system enters data in table IBNFEAT with the assignment of LMOH to an IBN line through SERVORD.

SERVORD example for LMOH

The following SERVORD example adds LMOH to a business set with the ADO SERVORD command.

SERVORD example for LMOH in prompt mode

```
>ADO
SONUMBER:  NOW 98 11 09  AM
>
DN_OR_LEN:
> 0 0 01 15
OPTKEY:
> 1
OPTION:
> LMOH
AUDIOGRP:
> AUDIO2
OPTION:
> $
```

SERVORD example for LMOH in no-prompt mode

```
> ADO $  00 0 01 15  1  LMOH  AUDIO2 $
```

MBS Call Pickup Feature Key S/W

Ordering codes

Functional group ordering code: MDC00007

Functionality ordering code: does not apply

Release applicability

BCS14 and later versions

Requirements

To operate, MBS Call Pickup Feature Key S/W has the following requirements:

- BAS Generic, BAS00003
- MDC Minimum, MDC00001

Description

The MBS Call Pickup Feature Key S/W allows a station to answer calls incoming to another station in a specified call pickup group. A call pickup group contains a group of stations with the Call Pickup feature joined together. One station is the primary directory number (PDN).

The MBS Call Pickup Feature Key S/W is for separate Meridian business sets (MBS). The MBS Call Pickup Feature Key S/W applies to a subset of the directory numbers (DN) of that MBS (subset feature).

Operation

The MBS Call Pickup Feature Key S/W feature can be active on an MBS. The end user can activate this feature with an access code or a Call Pickup (CPU) key. To operate the MBS Call Pickup Feature Key S/W feature, the end user performs the following steps:

1. Press an idle DN key or lift the handset if the PDN is free.
2. If the MBS Call Pickup Feature Key S/W feature is on a key, press the CPU key. If the MBS Call Pickup Feature Key S/W feature is on an access code, dial the access code.
3. The system routes the call to the telephone of the end user. The end user connects to the caller.

MBS Call Pickup Feature Key S/W (continued)

Translations table flow

Descriptions of the MBS Call Pickup Feature Key S/W translations tables appear in the following list:

- Table KSETFEAT (Business Set and Data Unit Feature) contains line features assigned to the business sets and data units in table KSETLINE (Business Set and Data Unit Line Assignment). For MBS end users that press a key to activate MBS Call Pickup Feature Key S/W, enter data in table KSETFEAT. This data assigns the Call Pickup feature key. If the end user activates the feature with an access code, the end user must assign the feature to key 1. Entry of this assignment must occur in table KSETFEAT. Field FEATKEY identifies the line equipment number (LEN) and key assignment (subfield FEAT and field FEATURE). Field KVAR, subfield LINKLEN, specifies the lowest LEN in the group of stations that form a call pickup group. Subfield KEYLIST lists the keys associated with DN appearances on the MBS to which assignment of this feature occurs. Subfield CPUGRPNUM specifies a call pickup group number. Use the Service Order System (SERVORD) to enter data in table KSETFEAT.
- Table XLANAME (List of Translator Names) controls the addition and deletion of translators in table IBNXLA. When an access code is not in table IBNXLA for a specified translator, use default data from table XLANAME.

  Note: The MBS Call Pickup Feature Key S/W requires that you enter data in table XLANAME to assign a translator. Enter this data before you enter data in table IBNXLA.

- Table IBNXLA (IBN Translation) stores the data for the digit translation of calls from one of the following locations:

  — an integrated business network (IBN) station

  — an attendant console (AC)

  — an incoming side of a two-way IBN trunk group

  For MBS end users that dial access codes to activate MBS Call Pickup Feature Key S/W, entry of data in table IBNXLA must occur. This data entry assigns the access code.

The MBS Call Pickup Feature Key S/W translation process appears in the following flowchart. The tables accessed during call processing appear in the flowchart and data. To access tables, the end user presses a dedicated key to activate MBS Call Pickup Feature Key S/W. For this activation, the end user presses a dedicated key or dials and access code.

MBS Call Pickup Feature Key S/W (continued)

Table flow for MBS Call Pickup Feature Key S/W

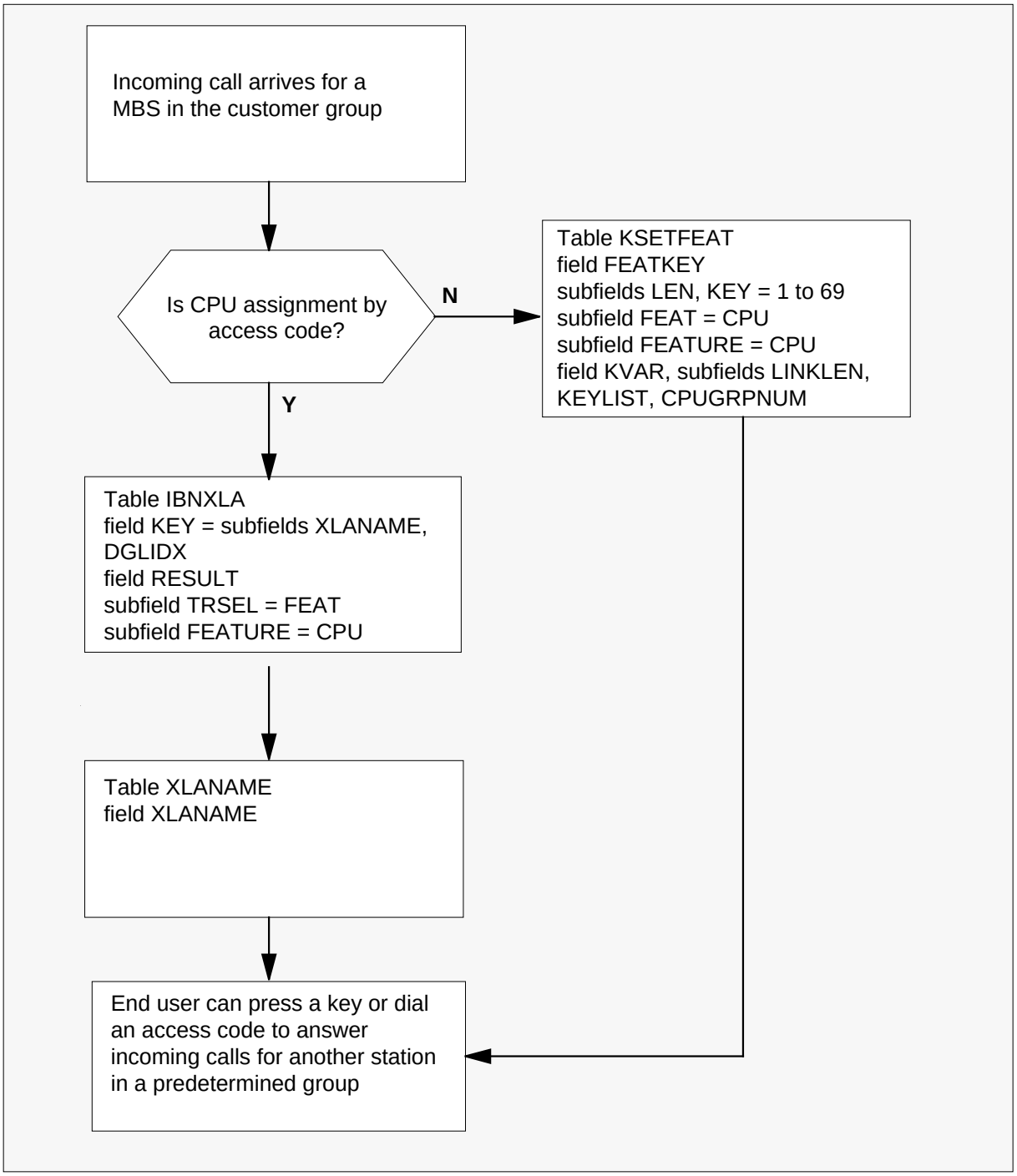

MBS Call Pickup Feature Key S/W (continued)

The datafill content used in the flowchart appears in the following table.

Datafill example for MBS Call Pickup Feature Key S/W

Datafill table	Example data
KSETFEAT	HOST 00 0 03 08 6 CPU CPU $
IBNXLA	CUSTXLA 44 FEAT N N N CPU

Limits

The following limits apply to MBS Call Pickup Feature Key S/W:

- The recommended maximum number of members or DNs in a call pickup group is 75. The limit is 100 members.
- The maximum number of DN keys allowed in the key list in table IBNFEAT for MBS Call Pickup Feature Key S/W is 24.
- If a large number of multiple appearance DNs (MADN) are in the call pickup group, reduce the maximum number of members.
- A station can be busy on a call. In this event, the station must terminate or put the first call on hold. The station must perform this action to pick up a call that rings another station in the call pickup group.

  Note: In BCS31, this limit changes by the three-way call/call pickup interaction feature (AF2100). This feature allows a busy station on a call to activate Call Pickup and conference all three parties together. See “Three-Way Call/Call Pickup Interaction" for additional information.

- A station cannot pick up call waiting calls with the MBS Call Pickup Feature Key S/W feature.
- A station cannot pick up camp-on calls with the MBS Call Pickup Feature Key S/W feature.
- A station can pick up calls only in the call pickup group of the station.

Interactions

Descriptions of the interactions between MBS Call Pickup Feature Key S/W and other functionalities appear in the following paragraphs.

Bridged Night Number

The MBS Call Pickup Feature Key S/W feature is not compatible with the bridged night number (BNN) option.

Denied Origination

The MBS Call Pickup Feature Key S/W feature is not compatible with the denied origination option.

Denied Termination

The MBS Call Pickup Feature Key S/W feature is not compatible with the denied termination option.

Hotel

The MBS Call Pickup Feature Key S/W feature is not compatible with the hotel option.

Activation/deactivation by the end user

To activate MBS Call Pickup Feature Key S/W on an MBS, the end user uses an access code. The end user can use a dedicated CPU key to perform this action also. To operate the MBS Call Pickup Feature Key S/W feature, the end user performs the following steps.

Activation/deactivation of MBS Call Pickup Feature Key S/W by the end user

At your telephone:

1. Press any idle DN key, or lift the handset if the PDN is free.

   Response:

   The end user hears audible ringing.

2. If the MBS Call Pickup Feature Key S/W feature is on a key, press the CPU key. If this feature is on an access code, dial the access code.

   Response:

   The system routes the call to the telephone of the end user. The end user connects to caller.

Billing

The MBS Call Pickup Feature Key S/W does not affect billing.

Station Message Detail Recording

The MBS Call Pickup Feature Key S/W does not affect Station Message Detail Recording.

Datafilling office parameters

The MBS Call Pickup Feature Key S/W does not affect office parameters.

MBS Call Pickup Feature Key S/W (continued)

Datafill sequence

The tables that require datafill to implement MBS Call Pickup Feature Key S/W appear in the following table. The tables appear in the correct entry order.

Datafill requirements for MBS Call Pickup Feature Key S/W

Table	Purpose of table
KSETFEAT (Note)	Business Set and Data Unit Feature Table. This table contains the line features assigned to the business sets and data units (DU) listed in table KSETLINE. This table contains the line features assigned to Meridian digital telephone sets and DUs listed in table IVDINV.
IBNXLA	IBN Translation. This table stores the data for the digit translation of calls from one of the following locations: • an IBN station • an AC • an incoming side of a two-way IBN trunk group
Note: Use SERVORD to enter data in this table. A datafill procedure or example is not available. See “SERVORD" for an example of how to use SERVORD to enter data in this table.	

Datafilling table IBNXLA

Datafill for MBS Call Pickup Feature Key S/W for table IBNXLA appears in the following table. The fields that apply to MBS Call Pickup Feature Key

MBS Call Pickup Feature Key S/W (continued)

S/W appear in this table. See the data schema section of this document for a description of the other fields.

Datafilling table IBNXLA

Field	Subfield or refinement	Entry	Explanation and action
KEY		see subfields	Key. This field contains subfields XLANAME and DGLIDX.
	XLANAME	one to eight character name	Translator name. This subfield specifies the name assigned to the translator. Enter the one to eight character name.
	DGLIDX	1 to 18 digit number	Digilator index. This subfield specifies the access code. Enter the 1 to 18 digit number assigned as the access code.
RESULT		see subfield	Result. This field contains subfield TRSEL.
	TRSEL	FEAT	Translations selector. This subfield specifies the translations selector to use. Enter FEAT. ***Note:*** If TRSEL is FEAT, enter data in refinements ACR, SMDR, and FEATURE.
	ACR	Y or N	Account code entry. This subfield specifies if an account code is a requirement. Enter Y or N.
	SMDR	Y or N	Station Message Detail Recording. This subfield specifies if SMDR is a requirement. Enter Y or N.
	FEATURE	CPU	Feature. This subfield specifies the feature assigned to a line. Enter CPU.

Datafill example for table IBNXLA

Sample datafill for table IBNXLA appears in the following example.

MAP example for table IBNXLA

```
KEY                                                    RESULT
_______________________________________________________________

CUSTXLA   44   FEAT   N   N    N     CPU
```

MBS Call Pickup Feature Key S/W (continued)

Tools for verifying translations

The MBS Call Pickup Feature Key S/W does not use tools for verifying translations.

SERVORD

Assign option CPU with the SERVORD command ADO (add option). Use the DEO (delete option) command to remove option CPU. Option CPU allows a station to answer calls incoming to another station in the same pickup group. Option CPU is on separate stations in a specified IBN customer group.

SERVORD limits

You can add options that require additional parameters, like CPU, to a FTRKEYS template. When you add these options, make sure that one of the following conditions is present:

- You assigned the option already to the same lines as the FTRKEYS template.
- You assign the option to the same lines as the FTRKEYS template. You must assign the option in the same command as the template. Assign the option in one of the following ways:
  - — Add the option to the line explicitly, in a single ADO command.
  - — Assign a feature group that contains the option to the line.

SERVORD prompts

The SERVORD prompts to assign MBS Call Pickup Feature Key S/W to a current line appear in the following table.

SERVORD prompts for MBS Call Pickup Feature Key S/W

Prompt	Valid input	Explanation
DN_OR_ LEN	seven-digit DN or LEN	Specifies the seven-digit DN or LEN of the line to change. Enter the DN or LEN.
OPTKEY	1 to 69	Indicates the key on an MBS to which assignment of an option occurs. Enter a value from 1 to 69.
OPTION	CPU	Indicates the name of the option. Enter CPU.
CPULEN	line equipment number	Specifies the LEN of the set that has the option CPU. Enter the LEN.

MBS Call Pickup Feature Key S/W (end)

Note: The system enters data in table KSETFEAT when you assign MBS Call Pickup Feature Key S/W with SERVORD.

SERVORD example for adding MBS Call Pickup Feature Key S/W

You can add MBS Call Pickup Feature Key S/W to a current line with the ADO command. This procedure appears in the following SERVORD example.

SERVORD example for MBS Call Pickup Feature Key S/W in prompt mode

```
SO:
> ADO
SONUMBER:   NOW 87  10  10  PM
>
DN_OR_LEN:
> 21211
OPTKEY:
> 7
OPTION:
> CPU
CPULEN:
> 21211
OPTKEY:
>$
```

SERVORD example for MBS Call Pickup Feature Key S/W in no-prompt mode

```
>ADO  $  21211  7  CPU  21211  $
```

MBS Call Waiting

Ordering codes

Functional group ordering code: MDC00007

Functionality ordering code: not applicable

Release applicability

BCS14 and up

Prerequisites

To operate, MBS Call Waiting has the following prerequisites:

- BAS Generic, BAS00003
- MDC Minimum, MDC00001

Description

MBS Call Waiting (CWT) alerts a busy station that an incoming call is trying to reach its directory number (DN). The called busy station receives call waiting notification (two bursts of buzz tone) initially and again ten seconds later. The calling station receives audible ringing. The called party can choose to acknowledge the calling party and place the existing call on hold, to alternate between the two calls, or to abandon one of the calls and be recalled by the other.

MBS Call Waiting applies to all calls coming into a customer group, as well as attendant-extended calls. MBS Call Waiting can be assigned to one or more DNs on a Meridian business set (MBS). This means that a customer can assign one CWT key for all, or some, of the DNs (subset feature).

An additional feature, Call Waiting Intragroup (CWI), can also be assigned on an MBS. However, CWI must be assigned to each DN of an MBS for CWI to function on each individual DN.

Operation

To operate the MBS Call Waiting feature, the end user performs the following steps:

- Press the CWT key. This puts the first party on hold and connects you to the second party.
- To return to the original caller, press the DN key next to the flashing lamp. You are now reconnected to the original caller, and the second caller is put on hold.

- You can alternate between the two calls as many times as you wish.
- To terminate either call, press the Release (RLS) key while connected to the desired party.

Translations table flow

The MBS Call Waiting translations table is described in the following paragraph.

Table KSETFEAT (Business Set and Data Unit Feature) lists the line features that are assigned to business sets and data units. Field FEATKEY subfield KEY identifies the specific key for the MBS Call Waiting feature. Subfield FEAT and field FEATURE identify the MBS Call Waiting feature. Field KVAR subfield RING specifies whether notification tone is to apply to the busy DN on waiting calls. Subfield PCWT specifies whether notification of a waiting higher precedence call is to apply, and subfield KEYLIST identifies the specific DNs or keys to which MBS Call Waiting applies. This feature assignment is made through SERVORD.

The MBS Call Waiting translation process is shown in the flowchart that follows. The flowchart and data show the MBS Call Waiting feature assignment through SERVORD and the specific information in Table KSETFEAT.

MBS Call Waiting (continued)

Table flow for MBS Call Waiting

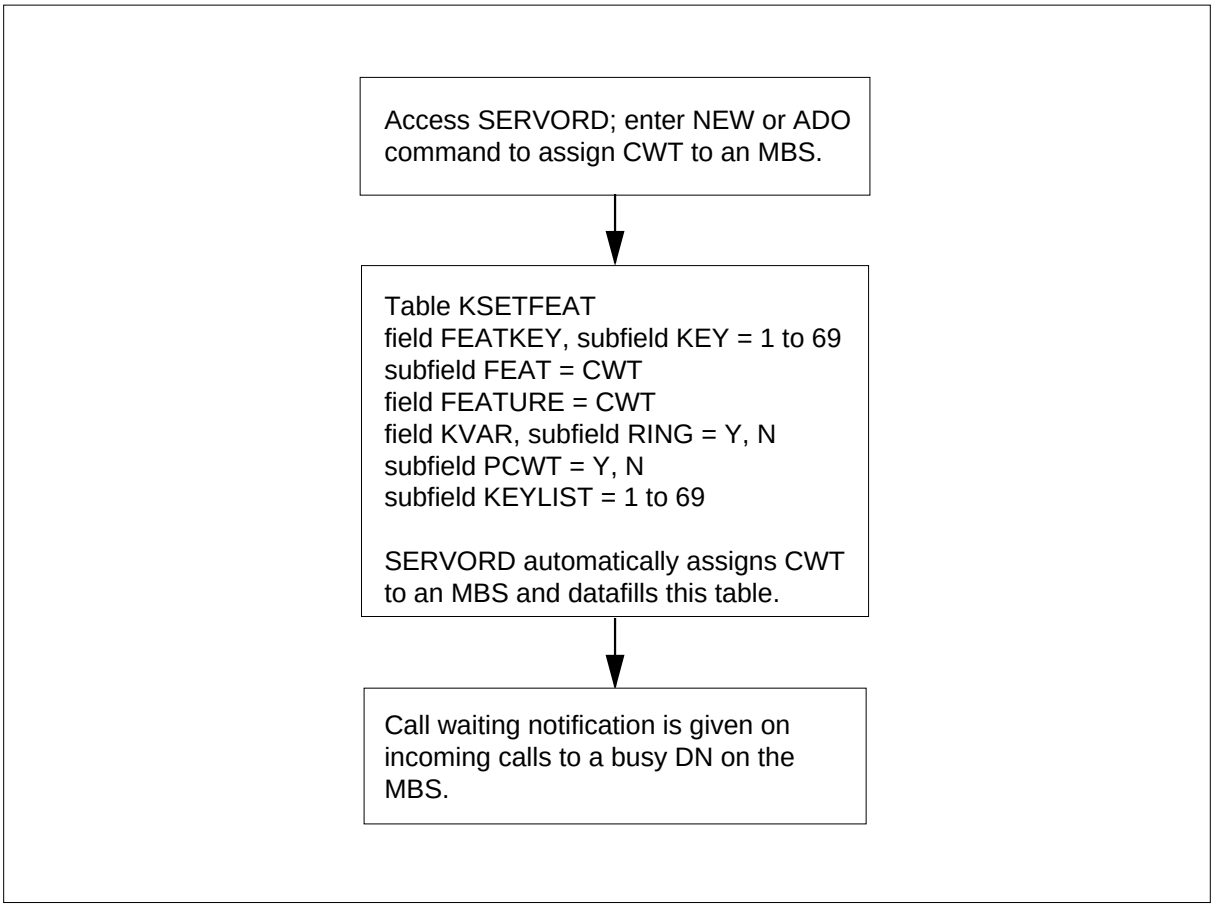

The following table lists the datafill content used in the flowchart.

Datafill example for MBS Call Waiting

Datafill table	Example data
KSETFEAT	HOST 00 0 06 15 4 CWT CWT Y N 1, 2, 3 $

Limitations and restrictions

The following limitations and restrictions apply to MBS Call Waiting:

- An MBS must have a CWT key assigned to use the MBS Call Waiting feature.
- MBS Call Waiting is subject to called line restrictions. A call is waited only if the called station is allowed to receive the call type.

- MBS Call Waiting applies to night service calls. Therefore, if the called station is also a night station, calls placed directly to the station do not have priority over night service calls.
- MBS Call Waiting cannot be assigned to any DN having the no double connect (NDC) option.
- If the waiting call is extended by an attendant, the following limitations and restrictions apply:
  - If the called party does not answer in a predetermined amount of time, the waiting call is routed to the attendant.
  - The length of time that a call waits for a called party to respond is a customer group parameter; it can also be specified as infinite. This timer is the same as is used for the call forward don't answer feature.
  - If the attendant attempts to extend a call to a busy station that already has a call waiting, the attendant receives reorder tone.
  - MBS Call Waiting does not apply to attendant-originated calls. If the called station is busy, the attendant receives busy tone.

Interactions

The following paragraphs describe the interactions between MBS Call Waiting and other functionalities.

Busy verification by the attendant

MBS Call Waiting does not apply to busy verification by the attendant.

Call forward universal or Call forward intragroup

If the called station has activated call forward universal or call forward intragroup, MBS Call Waiting is disabled while either of these two features is active.

Call forward busy

A station can be assigned call forward busy and MBS Call Waiting. Any incoming call encountering a busy station is call waited. If another call comes in, that call follows the call forward busy route.

In BCS31, the call forwarding of call waiting calls feature (NC0025) is available. This feature allows call waiting calls to forward if the end user does not answer the call within a certain time frame. The end user must have the call forward don't answer feature. Refer to NC0025 “Call Forwarding of Call Waiting Calls" for more information.

MBS Call Waiting (continued)

Conference

The called station can invoke the conference feature from the CWT key. A station can have a conference on the CWT key as well as on the DN key. The only restriction is that the station cannot conference a call on one of the DNs with the waited call.

Attendant camp-on

MBS Call Waiting and attendant camp-on are mutually exclusive. Neither can be assigned to the same DN. Attendant camp-on is a customer group parameter, and MBS Call Waiting is assigned on an individual set/DN basis.

MADN

MBS Call Waiting is assignable to any multiple appearance directory number (MADN) single call arrangement (SCA) member and to the primary number of a MADN multiple call arrangement (MCA) group.

Activation/deactivation by the end user

To operate the MBS Call Waiting feature, the end user performs the following steps.

Activation/deactivation of MBS Call Waiting by the end user

At your telephone

1 Press CWT key.

Response:

First party is put on hold, and end user is connected to second party.

2 To return to original caller, press DN key next to flashing lamp.

Response:

End user is reconnected to original caller, and second caller is put on hold.

Note: The end user can alternate between the two calls as many times as he or she wishes.

3 To terminate either call, press RLS key while connected to desired party.

Response:

Call is cancelled and calling party is treated as on-hook. If the second caller is still on hold, a new call to the called station can receive call waiting.

Billing

MBS Call Waiting does not affect billing.

Station Message Detail Recording

MBS Call Waiting does not affect Station Message Detail Recording.

Datafilling office parameters

MBS Call Waiting does not affect office parameters.

Datafill sequence

The following table lists the tables that require datafill to implement MBS Call Waiting. The tables are listed in the order in which they are to be datafilled.

Datafill tables required for MBS Call Waiting

Table	Purpose of table
KSETFEAT	Business Set and Data-Unit Feature Table. This table lists the line features that are assigned to the business sets and data units (DU) listed in table KSETLINE, and also the Meridian digital telephone sets and DUs listed in table IVDINV. ***Note:*** This table is datafilled through SERVORD; therefore, no datafill procedure or example is provided. Refer to “SERVORD" for an example of using SERVORD to datafill this table.

Translation verification tools

MBS Call Waiting does not use translation verification tools.

SERVORD

SERVORD is used to datafill table KSETFEAT.

Table KSETFEAT (Business Set and Data-Unit Feature) lists the line features that are assigned to the business sets and data units (DU) listed in table KSETLINE, and also the Meridian digital telephone sets and DUs listed in table IVDINV.

Option CWT is assigned using the Service Order System (SERVORD) command ADO (add option) The DEO (delete option) command is used to remove option CWT. Option CWT allows a busy station to be alerted whenever an incoming call is trying to reach the DN.

SERVORD limitations and restrictions

MBS Call Waiting has no SERVORD limitations and restrictions.

MBS Call Waiting (continued)

SERVORD prompts

The following table shows the SERVORD prompts used to assign MBS Call Waiting to an existing line.

SERVORD prompts for MBS Call Waiting

Prompt	Valid input	Explanation
DN_OR_ LEN	7-digit DN or LEN	Specifies the 7-digit DN or LEN of the line to be changed. Enter the DN or LEN.
OPTKEY	1 to 69	Indicates the key on an MBS to which an option is assigned. Enter a value from 1 to 69.
OPTION	CWT	Indicates the name of the option. Enter CWT.
CWT	Y, N	Indicates whether option CWT is active. Enter Y or N.
RING	Y, N	Specifies whether a ring from a telephone speaker is required in addition to the LCD diamond CWT key. Enter Y or N.
PCWT	Y, N	Indicates precedence for CWT. Enter Y or N.
KEYLIST	1 to 69	Specifies the key numbers of the DNs to which an option applies. Enter a value from 1 to 69.

Note: Table KSETFEAT is automatically datafilled when MBS Call Waiting is assigned using SERVORD.

SERVORD example for implementing MBS Call Waiting

The following SERVORD example shows how MBS Call Waiting is added to an existing line using the ADO command.

MBS Call Waiting (end)

SERVORD example for MBS Call Waiting in prompt mode

```
SO:
> ADO
SONUMBER:   NOW 87  10  10  PM
>
DN_OR_LEN:
> 2 1 2 11
OPTKEY:
> 4
OPTION:
> CWT
CWT:
> Y
RING:
> Y
PCWT:
> Y
KEYLIST:
> 1
KEYLIST:
> $
OPTKEY:
> $
```

SERVORD example for MBS Call Waiting in no-prompt mode

```
>ADO  $  2 1 2 11  4  CWT  Y  Y  Y  1  $  $
```

MBS Display Called Number

Ordering codes

Functional group ordering code: MDC00007

Functionality ordering code: does not apply

Release applicability

BCS15 and later versions

Requirements

To operate, MBS Display Called Number requires BAS Generic, BAS00003.

Description

The MBS Display Called Number provides the end user of a display set the ability to have a visual feedback concerning the called number. This feedback occurs during the origination, termination, programming, and feature activation operations. A display set is a business set equipped with the optional 32-character alphanumeric liquid crystal display (LCD).

Two lines of display with 16 characters are present. The upper line reflects the condition of the call. The lower line reflects the dialed digits.

Operation

When the selection of an idle directory number (DN) for call origination occurs, the LCD clears. To operate the MBS Display Called Number feature, the following occurs:

- As the end user dials the digits, the digits echo from left to right on the lower line of the LCD. If the end user dials more than 16 digits, the upper line of the LCD clears. The excess digits appear on the upper line.
- After the end user dials the complete number, the upper line clears. The upper line indicates a new termination if the system forwards or picks up the call.
- The display clears when the end user goes on-hook or presses the release key. The display can clear when the called party disconnects.
- If an access code activates a feature, the digits of the access code appear.

Translations table flow

Descriptions of the MBS Display Called Number translations tables appear in the following list:

- Table KSETINV (Business Set and Data Unit Inventory) contains business sets and data unit inventory data. An entry occurs for each card slot

MBS Display Called Number (continued)

assigned to the business set or data unit through SERVORD. Field SETDATA, subfield KSET identifies the format (DISP) for business sets with an LCD display. This option is for MBSs with an LCC of PSET only

- Table CUSTSTN (Customer Group Station Option) identifies the station options assigned to each customer group. Field OPTNAME identifies the display option (DISPDIGS). Field OPTION identifies option DISPDIGS to display called numbers. Subfield NUMODIGS identifies the number of digits to display.

The MBS Display Called Number translation process appears in the following flowchart. An assignment through SERVORD appears in the flowchart and data. This assignment includes the display option to business sets with a line class code (LCC) of PSET. This assignment also includes the number of digits that appear for the MBS Display Called Number feature.

Table flow for MBS Display Called Number

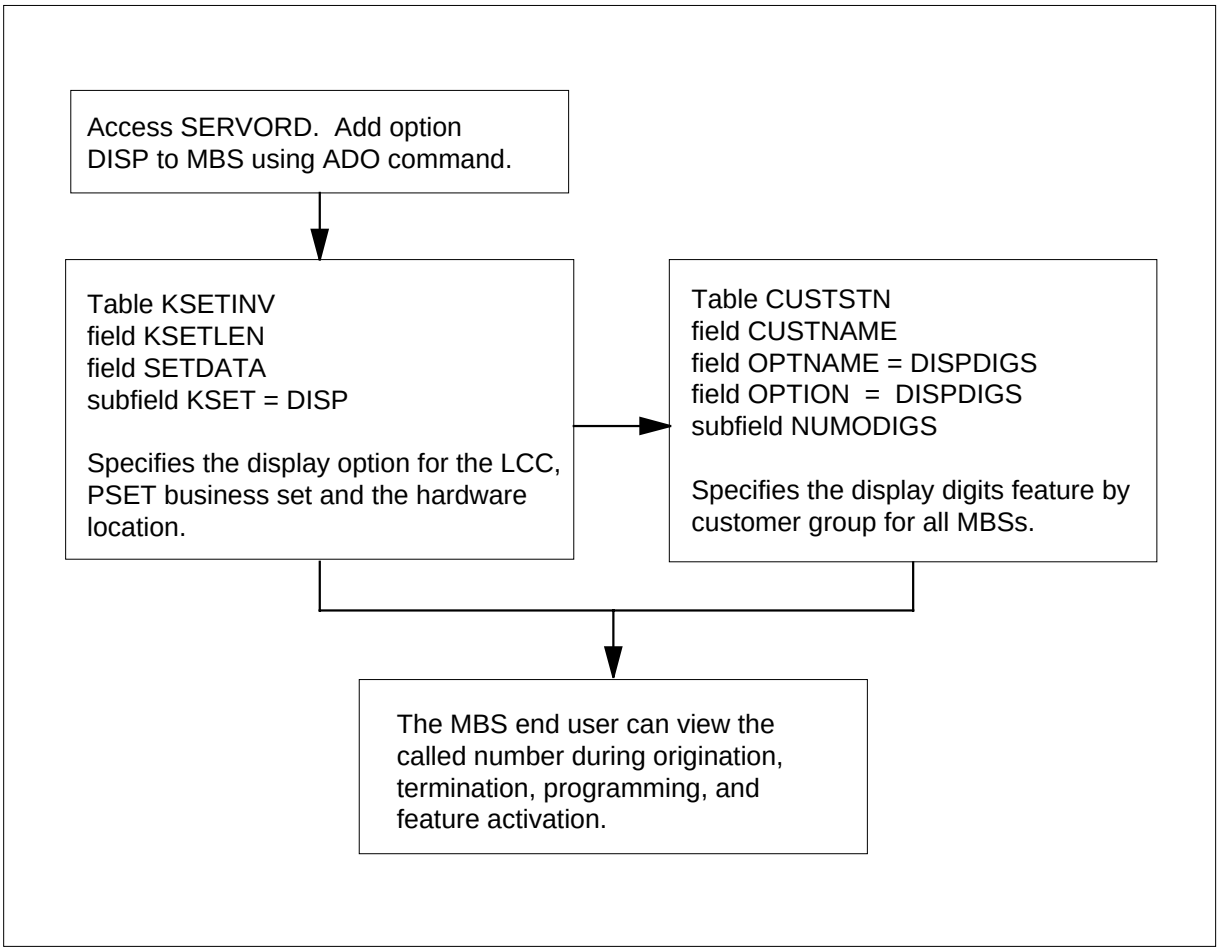

MBS Display Called Number (continued)

The datafill content used in the flowchart appears in the following table.

Datafill example for MBS Display Called Number

Datafill table	Example data
KSETINV	HOST 00 0 00 12 DISP N $
CUSTSTN	MDCGRP1 DISPDIGS DISPDIGS 4

Limits

The following limits apply to MBS Display Called Number:

The use of a display set can be for a main set or an extension set. If the use of the set is for an extension set, the main set must be a display set also. This condition must apply before the extension set can operate.

Interactions

A description of an interaction between MBS Display Called Number and the Hold feature appears in the following paragraph.

When the HOLD key or the Autohold feature holds a call, the display clears. When the end user reenters the held call, the dialed digits appear again.

Activation/deactivation by the end user

The MBS Display Called Number does not require activation or deactivation by the end user.

Billing

The MBS Display Called Number does not affect billing.

Station Message Detail Recording

The MBS Display Called Number does not affect Station Message Detail Recording.

MBS Display Called Number (continued)

Datafilling office parameters

The office parameters used by MBS Display Called Number appear in the following table. Refer to *Office Parameters Reference Manual* for additional information about office parameters.

Office parameters used by MBS Display Called Number

Table name	Parameter name	Explanation and action
OFCENG	KSET_INTER_GRP_DISP	Specifies if information on calls arriving from outside the customer group appears on the terminator display set. Enter Y or N. The default value is N.

Datafill sequence

The tables that require datafill to implement MBS Display Called Number appear in the following table. The tables appear in the correct entry order.

Datafill requirements for MBS Display Called Number

Table	Purpose of table
CUSTSTN	Customer Group Station Option. This table contains the options for stations on a customer group basis.
KSETINV (Note)	Business Set and Data-Unit Inventory. This table lists the business set and add-on module data appear in this table.
Note: The entry of data in this table occurs through SERVORD. A datafill procedure is not available. See “SERVORD" for an example of how to use SERVORD to enter data in this table.	

Datafilling table CUSTSTN

Table CUSTSTN (Customer Group Station Option) contains the options for stations on a customer group basis. The entry of data in this table must occur to define the number of digits to appear for intragroup calls. These calls are on all types of business sets with a display.

Datafill for MBS Display Called Number for table CUSTSTN appears in the following table. The fields that apply to MBS Display Called Number appear

MBS Display Called Number (continued)

in this table. See the data schema section of this document for a description of the other fields.

Datafilling table CUSTSTN

Field	Subfield or refinement	Entry	Explanation and action
OPTNAME		DISPDIGS	Option Name. This field specifies the option name for the display digits option. Enter DISPDIGS.
OPTION		See subfield	Option. This field contains subfields OPTION and NUMODIGS.
	OPTION	DISPDIGS	Option. This subfield specifies the name of the option. Enter DISPDIGS.
	NUMODIGS	1to12	Number of Digits. This subfield specifies the number of digits to appear. Enter a value from 1 to 12.

Datafill example for table CUSTSTN

Sample datafill for table CUSTSTN appears in the following example.

MAP example for table CUSTSTN

```
TABLE:  CUSTSTN

   CUSTNAME     OPTNAME                          OPTION
_____________________________________________________________

   MDCGRP1     DISPDIGS                     DISPDIGS  4
```

Tools for verifying translations

The MBS Display Called Number does not use tools for verifying translations.

SERVORD

The MBS Display Called Number does not use tools for verifying translations.

The business set and add-on module data appear in table KSETINV (Business Set and Data-Unit Inventory).

The assignment of option DISP occurs through the Service Order System (SERVORD) command ADO (add option). The removal of option DISP

MBS Display Called Number (continued)

occurs through the DEO (delete option) command. Option DISP indicates that a business set on a PSET line is a display business set.

SERVORD limits

The MBS Display Called Number does not have SERVORD limits.

SERVORD prompts

The SERVORD prompts used to assign MBS Display Called Number to a current line appear in the following table.

SERVORD prompts for MBS Display Called Number

Prompt	Correct input	Explanation
DN_OR_LEN	seven-digit DN or LEN	Specifies the 7-digit DN or LEN of the line to change. Enter the DN or LEN.
OPTKEY	1 to 69	Indicates the key on an MBS to which assignment of an option occurs. Enter a value from 1 to 69.
OPTION	DISP	Indicates the name of the option. Enter DISP.

Note: The system enters data in table KSETINV when the assignment of MBS Display Called Number occurs through SERVORD.

SERVORD example for implementing MBS Display Called Number

The addition of the MBS Display Called Number to a current line occurs through the ADO command. This procedure appears in the following SERVORD example.

SERVORD example for MBS Display Called Number in prompt mode

```
SO:
> ADO
SONUMBER:   NOW 87  10  10  PM
>
DN_OR_LEN:
> 2 1 2 11
OPTKEY:
> 1
OPTION:
> DISP
OPTKEY:
> $
```

MBS Display Called Number (end)

SERVORD example for MBS Display Called Number in no-prompt mode

```
>ADO   $   2 1 2 11  1   DISP   $
```

MBS Display Calling Number

Ordering codes

Functional group ordering code: MDC00007

Functionality ordering code: does not apply

Release applicability

BCS15 and later versions

Requirements

To operate, MBS Display Calling Number has the following requirements:

- BAS Generic, BAS00003
- MDC Minimum, MDC00001

Description

The MBS Display Calling Number provides the end user of a display set with visual feedback. The visual feedback includes the calling number during the origination, termination, programming, and feature activation operations. The display set of the end user is a business set equipped with the optional 32-character alphanumeric liquid crystal display (LCD).

The end user specifies through datafill if incoming intergroup calls must appear. The default is to not display intergroup calls. See “Office parameters" in this feature description for information on this datafill.

Operation

The display clears when the display set enters a digit collection state, feature programming, or call origination.

With an idle display set, the system displays incoming call information on the upper line of the two-line LCD. The system does not display the incoming call information when the following conditions occur:

- the display set is not idle
- the primary directory number (PDN) is idle

With the direction of an incoming call to a secondary directory number (SDN), the call information displays when the call completes.

MBS Display Calling Number (continued)

The information that appears depends on the type of originator of the incoming call:

- Calls from the same customer group display the extension number of the caller. With the intergroup display parameter setting, the directory number (DN) of the caller appears. With an intergroup display that is not allowed, an information unavailable message appears. Incoming POTS call directory numbers never appear.
- Calls that originate from intragroup trunks display the six-digit short common language location identifier (CLLI) from table CLLIMTCE (Common Language Location Identifier Maintenance). With the intergroup display parameter setting, the short CLLI for the intergroup trunk appears.
- The last eight characters of the CLLI appear in calls that originate from intragroup attendant consoles (AC), or intergroup ACs with the intergroup display parameter setting.

Translations table flow

The MBS Display Calling Number translations tables appear in the following list:

- Table KSETINV (Business Set and Data Unit Inventory) contains business sets and data unit inventory data. Use SERVORD to enter data for each assigned a card slot to the business set or data unit. Field SETDATA, subfield KSET, identifies the format (DISP) for business sets with an LCD display. This option is for MBSs with an LCC of PSET only.
- Table CUSTSTN (Customer Group Station Option) identifies the station options assigned to each customer group. Field OPTNAME identifies the display option (DISPDIGS). Field OPTION identifies DISPDIGS to display calling numbers. Subfield NUMODIGS identifies the number of digits that appear.

The MBS Display Calling Number translation process appears in the following flowchart. Field OPTNAME identifies the display option (DISPDIGS). Field OPTION identifies DISPDIGS to display calling numbers. Subfield NUMODIGS identifies the number of digits to display.

MBS Display Calling Number (continued)

Table flow for MBS Display Calling Number

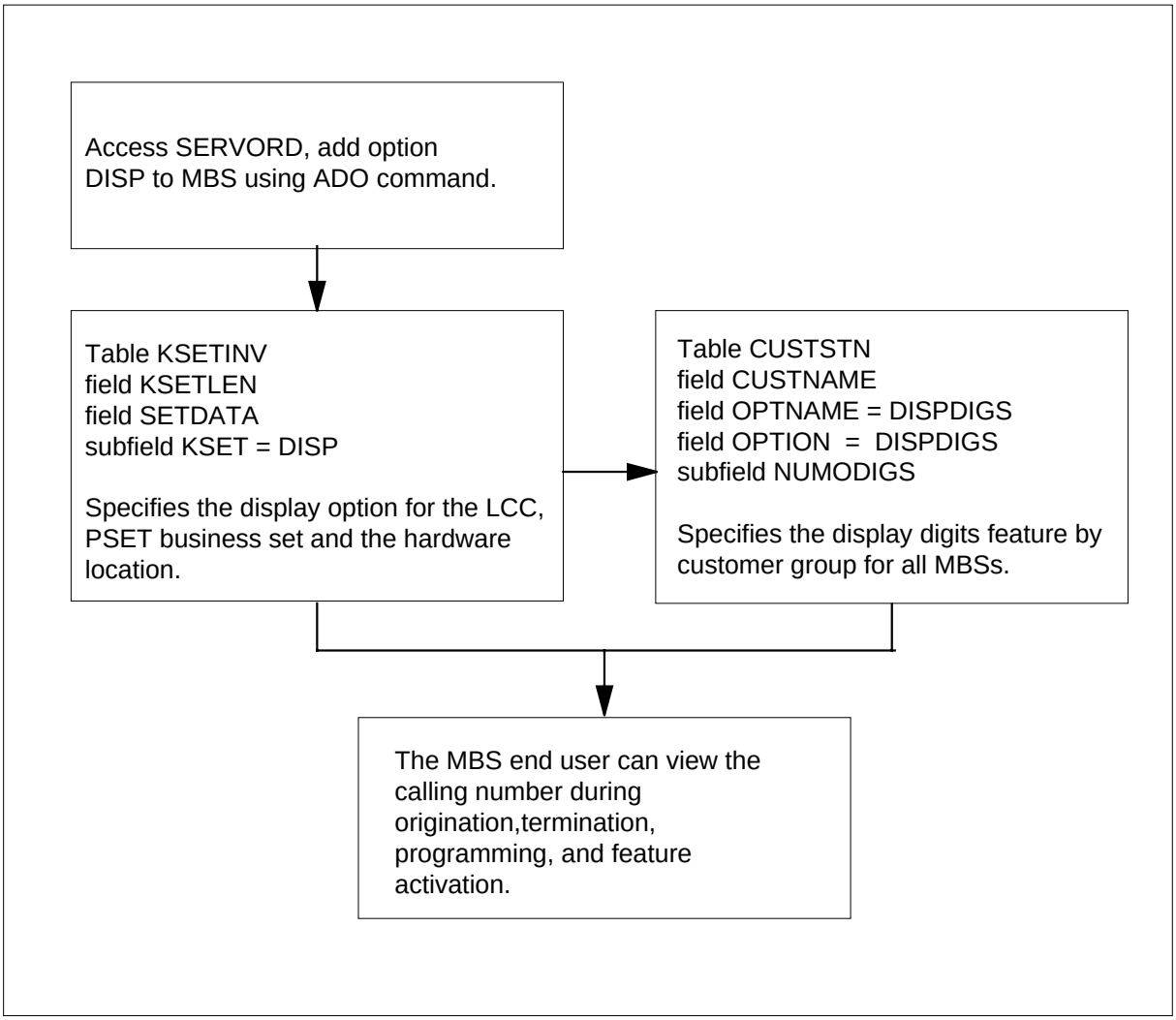

Datafill content for the flowchart appears in the following table.

Datafill example for MBS Display Calling Number

Datafill table	Example data
KSETINV	HOST 00 0 00 12 DISP N $
CUSTSTN	MDCGRP1 DISPDIGS DISPDIGS 4

MBS Display Calling Number (continued)

Limits

The following limits apply to MBS Display Calling Number:

- When you enter the feature access codes when in a digit collection state, the entered digits appear.
- A display set cannot be used as an extension set. Incoming calls to the PDN automatically appear on the main set.

Interactions

The interactions between MBS Display Calling Number and other functionalities appear in the following paragraphs.

Call Forwarding Don't Answer (CFD). If the CFD feature forwards a call, the display clears.

Call Pickup (CPU). If the CPU feature is in use to answer a call, the display clears.

Multiple Appearance Directory Number (MADN). The system displays incoming call information on all members of a MADN group where the ringing MADN is the PDN of the display set. With the answered call, only the display of the answering member remains active.

Activation/deactivation by the end user

MBS Display Calling Number does not require activation or deactivation by the end user.

Billing

MBS Display Calling Number does not affect billing.

Station Message Detail Recording

MBS Display Calling Number does not affect Station Message Detail Recording.

Datafilling office parameters

Office parameters used by MBS Display Calling Number appear in the following table. See *Office Parameters Reference Manual* for additional information about office parameters.

Office parameters used by MBS Display Calling Number

Table name	Parameter name	Explanation and action
OFCENG	KSET_INTER_GRP_DISP	Specifies if information on calls that arrive from out of the customer group appears on the display set of the terminator. Enter Y or N. The default value is N.

Datafill sequence

Tables that require datafill to implement MBS Display Calling Number appear in the following table. The tables appear in the correct entry order.

Datafill tables required for MBS Display Calling Number

Table	Purpose of table
CUSTSTN	Customer Group Station Option. This table contains station options for each customer group.
KSETINV (Note)	Business Set and Data-Unit Inventory. This table lists the business set and add-on module data.
Note: Use SERVORD to enter data in this table. A data entry procedure is not provided. See “SERVORD" for an example of using SERVORD to enter this table.	

Datafilling table CUSTSTN

Table CUSTSTN (Customer Group Station Option) contains station options for each customer group. Enter data in this table to define the number of digits that appear for intragroup calls.

Datafill for MBS Display Calling Number for table CUSTSTN appears in the following table. The fields that apply to MBS Display Calling Number appear

MBS Display Calling Number (continued)

in this table. See the data schema section of this document for a description of the other fields.

Datafilling table CUSTSTN

Field	Subfield or refinement	Entry	Explanation and action
OPTNAME		DISPDIGS	Option Name. This field specifies the option name for the display digits option. Enter DISPDIGS.
	OPTION	DISPDIGS	Option. This subfield specifies the name of the option. Enter DISPDIGS.
	NUMODIGS	1 to 12	Number of Digits. This subfield specifies the number of digits to display. Enter a value from 1 to 12.

Datafill example for table CUSTSTN

Sample datafill for table CUSTSTN appears in the following example.

MAP example for table CUSTSTN

```
TABLE:  CUSTSTN

 CUSTNAME     OPTNAME                              OPTION
 ____________________________________________________________

 MDCGRP1      DISPDIGS                       DISPDIGS  4
```

Tools for verifying translations

MBS Display Calling Number does not use tools for verifying translations.

SERVORD

Use SERVORD to enter data in table KSETINV.

Table KSETINV (Business Set and Data-Unit Inventory) lists the business set and add-on module data.

Assign option DISP using the Service Order System (SERVORD) command ADO (add option). Use the DEO (delete option) command to remove the option DISP. Option DISP indicates that a business set on a PSET line is a display business set.

MBS Display Calling Number (continued)

SERVORD limits

MBS Display Calling Number does not have SERVORD limits.

SERVORD prompts

The SERVORD prompts used to change MBS Display Calling Number to a DN or LEN appear in the following table.

SERVORD prompts for MBS Display Calling Number

Prompt	Correct input	Explanation
DN_OR_LEN	7-digit DN or LEN	Specifies the 7-digit DN or LEN of the line to change. Enter the DN or LEN.
OPTKEY	1 to 69	Indicates the key on an MBS to which an option is assigned. Enter a value from 1 to 69.
OPTION	DISP	Indicates the name of the option. Enter DISP.

Note: Use SERVORD to enter data in table KSETINV to assign MBS Display Calling Number.

SERVORD example for implementing MBS Display Calling Number

How a MBS Display Calling Number is assigned to an current line using the ADO command appears in the following SERVORD example.

SERVORD example for MBS Display Calling Number in prompt mode

```
SO:
> ADO
SONUMBER:   NOW 87  10  10  PM
>
DN_OR_LEN:
> 2 1 2 11
OPTKEY:
> 1
OPTION:
> DISP
OPTKEY:
> $
```

MBS Display Calling Number (end)

SERVORD example for MBS Display Calling Number in no-prompt mode

```
>ADO   $   2 1 2 11  1   DISP   $
```

MBS End to End Signalling

Ordering codes

Functional group ordering code: MDC00007

Functionality ordering code: does not apply

Release applicability

BCS14 and later versions

Requirements

The MBS End to End Signalling feature has the following requirements:

- BAS Generic, BAS00003
- MDC Minimum, MDC00001

Description

The MBS End to End Signalling feature allows a Meridian Business Set (MBS) to outpulse dual tone multifrequency (DTMF) digits while active on a call. The MBS End to End Signalling is a basic capability on 2500 sets, and a basic feature on MBSs.

Operation

When a connection occurs between an MBS and a distant end, including treatments, the following occurs. The MBS end user presses digit keys to perform end-to-end signaling. The system continues to outpulse digits received while active supervision of the connection continues. For each pressed digit key, the system outpulses 50 ms of DTMF. Fifty ms of idle tone follows the outpulse. Between the outpulsing of digits, the system connects pulse code modulation (PCM) again. If the end user attempts to release the call before the system outpulses all digits, the system delays the release. The system delays the release until outpulsing completes.

Translations table flow

The MBS End to End Signalling feature does not affect translations table flow.

Limits

The MBS End to End Signalling feature does not have limits.

Interactions

The MBS End to End Signalling feature does not have functionality interactions.

MBS End to End Signalling (end)

Activation/deactivation by the end user

The MBS End to End Signalling feature does not require activation or deactivation by the end user.

Billing

The MBS End to End Signalling feature does not affect billing.

Station Message Detail Recording

The MBS End to End Signalling feature does not affect Station Message Detail Recording.

Datafilling office parameters

The MBS End to End Signalling feature does not affect office parameters.

Datafill sequence

The MBS End to End Signalling feature does not affect datafill.

Tools for verifying translations

The MBS End to End Signalling feature does not use tools for verifying translations.

SERVORD

The MBS End to End Signalling feature does not use SERVORD.

MBS Feature Code Access

Ordering codes

Functional group ordering code: MDC00007

Functionality ordering code: does not apply

Release applicability

BCS14 and later versions

Requirements

To operate, MBS Feature Code Access has the following requirements:

- BAS Generic, BAS00003
- MDC Minimum, MDC00001

Description

The MBS Feature Code Access feature provides an alternate method of accessing Meridian business set (MBS) features. This method is different than the use of dedicated feature keys to access these features.

Operation

To use any features through code access, the call must be active on a directory number (DN) or the Call Waiting (CWT) key/lamp. For the features that require flashes, the pressing of the Three-Way Calling/Call Transfer (3WC/CXR) key generates the flash equivalent.

An MBS must have a 3WC/CXR key for the use of many of the code accessed features. If only a CXR key is present, the end user cannot always flash. The type of call transfer and the type of line or trunks involved in the active call determines this action.

MBS Feature Code Access (continued)

The following three categories of features are available through dialed code access on the MBS:

- Features activated during the origination stage of the call, when receiving dial tone:
  - — account code input
  - — authorization code input
  - — call forward cancellation
  - — call forward programming/activation
  - — call park retrieve
  - — call pickup
  - — code calling pickup
  - — loudspeaker paging
  - — speed call dialing
  - — speed call user
  - — speed calling short/long programming
  - — TAFAS pickup
  - — 30-port conference
- Features activated when the call is in the talking state. These calls require activation through a flash:
  - — account code input
  - — call park store
  - — camp-on retrieve (flash only)
  - — malicious call hold
  - — multiple appearance directory number (MADN) privacy release (PRL)

— 30-port conference

— 30-port conference release

- Features activated when the caller receives busy tone:

  — account code input

  — call park store

  — executive busy override

  — malicious call hold

  — 30-port conference

  — 30-port conference release

Note 1: Features activated when the caller receives busy tone are also available through code access from the CWT key.

Note 2: If the system parks a call from the CWT key, the system recalls the CWT key on time-out. This action can occur when the primary directory number (PDN) is idle.

Translations table flow

The MBS Feature Code Access does not affect translations table flow.

Limits

MBS Feature Code Access does not have limits.

Interactions

The interactions between MBS Feature Code Access and other functionalities appear in the following paragraphs.

Auto-dial Dialing

The system does not support code access to auto-dial dialing.

Auto-dial Program

The system does not support code access to auto-dial program.

Call Waiting

The system does not support code access to call waiting (CWT).

Call-back Queuing Activation

The system does not support code access to call-back queuing (CBQ) activation.

MBS Feature Code Access (continued)

Call-back Queuing Cancellation

The system does not support code access to CBQ cancellation.

Make Set Busy

The system does not support code access to make set busy (MSB).

Multiple Appearance Directory Number Hold

The system does not support code access to multiple appearance directory number (MADN) hold.

Permanent Hold

The system does not support code access to permanent hold (PHOLD).

Ring Again Activation

The system does not support code access to ring again (RAG) activation.

Ring Again Cancellation

The system does not support code access to RAG cancellation.

Speed Call Dialing

The use of the speed call dialing access code when the key is present does not appear with the associated lamp.

30-Port Conference

The use of the 30-port conference access code when the key is present does not appear with the associated lamp.

Activation/deactivation by the end user

The MBS Feature Code Access does not require activation or deactivation by the end user.

Billing

The MBS Feature Code Access does not affect billing.

Station Message Detail Recording

The MBS Feature Code Access does not affect Station Message Detail Recording.

Datafilling office parameters

The MBS Feature Code Access does not affect office parameters.

MBS Feature Code Access (end)

Datafill sequence

The MBS Feature Code Access does not affect datafill.

Tools for verifying translations

The MBS Feature Code Access does not use tools for verifying translations.

SERVORD

The MBS Feature Code Access does not use SERVORD.

MBS Feature Display

Ordering codes

Functional group ordering code: MDC00007

Functionality ordering code: does not apply

Release applicability

BCS15 and later versions

Requirements

To operate, MBS Feature Display has the following requirements:

- BAS Generic, BAS00003
- MDC Minimum, MDC00001

Description

The MBS Feature Display provides visual feedback on data the user enters and incoming call information during the use of other MDC features. This feature provides this information to the end user of a business set with the 32-character alphanumeric liquid crystal display (LCD) lamp.

Note: In BCS25, feature AG0858, Enhanced EBS Reason Display enhances this feature. See “Enhanced EBS Reason Display" for additional information.

Operation

The MBS Feature Display provides the following data the user enters and incoming call information on an MBS with display:

- The bottom line of the display is for echoing dialed digits. If the user dials more than 16 characters, the overflow digits scroll to the top line.
- The top line displays calling party information or the results of queries.
- A different party other than the dialed party can answer the incoming call. When this event occurs, the information about the answering party appears on the top line of the display of the originator.
- The answering station can also be an MBS with display. When this condition occurs, the information of the originator followed by the information of the answering station appears on the display. A blank separates the two strings of information that appear on the top line.
- When in a voluntary conference, like Three-Way Calling, the string ++++++++ appears on all the displays of the conferees.

Translations table flow

The MBS Feature Display does not affect translations table flow.

Limits

The MBS Feature Display does not have limits.

Interactions

The interactions between MBS Feature Display and other functionalities appear in the following paragraphs.

Attendant Busy Verification.

The barging in of an attendant to busy verify a line does not appear to the active parties on that line.

Attendant Camp-On

This action only applies to display sets that do not have call waiting (CWT). When a call camps-on against an active DN, the end user has two options. The end user can release the present call and the camped-on call can call the end user. The other option gives the end user use of the Three-Way Calling/Call Transfer (3WC/CXR) key. The user can hold the active call and answer the camped-on call with the use of this key. In the first condition, the display clears on release. The system handles the call like an incoming call. In the second condition, when the end user flip-flops between parties, the information about the active party appears.

Attendant Conference

A display set can be the terminator of an attendant conference. When this condition occurs, a display appears to the attendant until the attendant conferences the end user. When the attendant conferences the end user, the conference symbol appears.

Autodial

As in speed calling, the stored number appears on the bottom line as the end user autodials the stored number. The use of the top line can also occur.

Automatic Line

The number stored against the automatic line key does not appear.

Call Forwarding (CFW)

Activation and deactivation do not affect the display. When the system forwards a call, the display of the originator indicates the answering party. The display of the terminator indicates the originating party and the first party that forwarded the call. A blank separates the two strings.

MBS Feature Display (continued)

Call Park (PRK)

An attempted activation of PRK does not alter the information that appears. The attempted activation of PRK can be successful or not successful. When a party releases the call, the display clears. Digits collected for retrieving a parked call appear as normal. The dialed digits remain on display after retrieval. The recall of a display set can occur because the parking meter times out. When this condition occurs, this recall appears like an incoming call. When the retrieval of the parked party occurs, an update of the display of the party occurs. This update indicates the unparking party.

Call Pickup (CPU)

Code access or pressing a key can pick up a call. When this action occurs, the calling number information and the intended terminator appear on the display of the answering party. The top line of the originator displays the information of the answering party.

Call Waiting (CWT)

The system handles the CWT key as a secondary DN. Incoming call information only appears when access to the CWT key occurs. The end user can hold and access a call again on the CWT key. This procedure is the same as for any normal DN. The system ignores the pressing of the CWT key when waited calls are not present. This condition does not affect the display. The end user can initiate a three-way call from the CWT key. When this condition occurs, the PDN of the end user appears at the display set of the third party.

Cut-Through Dialing

Cut-through dialing is part of the dialing phase. The system echoes and stores dialed digits. The system can display the dialed digits again.

Directed Call Pickup

The digits dialed appear. When the pick up of a call occurs, only the calling number information appears. As with normal CPU, the top line of the display of the originator indicates the answering party.

Directory Number Hunt (DNH) Group

When terminating on a DNH group, the system updates the top line of the display of the originator. This update indicates the hunt member terminated on. All members of the hunt group can be busy and overflow to DN can be active. When this condition occurs, the overflowed DN appears on the display of the originator. If line overflow to a route is active, ******** appears.

The entry of feature access codes occur while in a digit-collection state. When this condition occurs, the entered digits appear on the display. If flashing activates a feature, the original party appears again. This action occurs if

MBS Feature Display (continued)

activation is successful. If activation is not successful, accessing the original call also causes the original party to appear again.

End-to-End Signaling

A call on a line with this feature can reach a talking state. When this condition occurs, all digits entered echo on the display of that set. The system does not store these digits. The system cannot display digits again if the digits are cleared.

Executive Busy Override

Access to a call can occur through the EBO feature. When access occurs, the displays of the two barged-in on parties indicate the barging-in party. The dialed digits of the barging-in party remain on the display. If the third party flashes off, the display of that party clears. The system can reconfigure a call back to a two-port call. When this condition occurs, the displays of the remaining parties indicate the party to which each party connects.

Group Intercom (GIC)

The incoming call information appears when access to the GIC key occurs. The member number of the originator appears as if the member number is an extension. Digit collection from the GIC key appears as usual.

Last Number Redial (LNR)

The display for LNR is the same as for autodial and speed calling.

Meet-Me Conference

The digits dialed to call the conference appear as normal. When the conference answers the call, the display of the originator indicates the conference symbol ++++++.

Preset Conference

A preset conference can originate a call. When this call terminates on a display set, the conference symbol appears.

Privacy Release

Activation and cancellation of this feature does not affect the display. When an MADN group member enters a privacy-released call, the information of an external party appears.

Ring Again (RAG) and Call-Back Queuing (CBQ)

The activation of RAG and CBQ releases the active call. Successful activation clears the display. The treatment of recalls is like incoming calls to an SDN. The RAG recalls indicate the requested party. The CBQ recalls indicates the dialed digits.

MBS Feature Display (continued)

Speed Calling

When using speed calling, the number stored against the entered speed call number appears when dialed. If the total display exceeds 16 characters, the use of the top line also occurs. A dash separates the speed call digits and stored number. If the speed call digits are not programmed, the speed call number followed by a series of dashes appears.

Station Controlled Conference

When the end user uses the CNF key and the key press is acceptable, the display clears. Display of digit collection is like normal. When in a conferenced state, all parties display +++++++.

Three-Way Calling (3WC) and Call Transfer (CXR)

When in a talking state, the end user can press the 3WC/CXR key to attempt to initiate a three-way call. If the key press is acceptable, the display clears for digit collection. The system holds the captive directory number (DN). If the 3WC/CXR key press is not acceptable, the display, like the call, is not affected. When in a digit collection state, all dialed digits appear. If the controller flips to the held party, the display displays the held party again. The dialed digits do not appear on the display. When accessing the second leg again, that held party appears. When conferenced, all parties display +++++++++. The controller can release when in a consult state with a party. When this event occurs, the system drops that party and the other party remains on hold on the original DN. When access to this DN occurs again, the information of this DN appears. If released when conferenced, the system transfers or takes down the call.

A display set can be the terminator of the second leg of a three-way call. When this condition occurs, the information of the controller appears until conferenced. The controller releasing can transfer the call. When this condition occurs, the system updates the display to indicate the information of the new originator.

A display set can be the other party of the first leg of a three-way call, originator or terminator. When this condition occurs, the display remains as in the first call until the conferencing of the call occurs. If transferred, the top line displays the information for the new terminator.

A caller can dial an attendant, directly or not directly, as the second leg of a three-way call. When the attendant answers, the attendant takes control of the conference and the held party comes in. The displays of the original two parties indicate the call information for that attendant.

Trunk Answer from Any Station (TAFAS)

When code access picks up a call, the calling number information appears on the display of the answering party. The top line of the originator shows the information of the answering party.

Use of the barge-in facility of directed CPU can occur. When this condition occurs, the barging-in party appears on the display of the original party.

Activation/deactivation by the end user

The MBS Feature Display does not require activation or deactivation by the end user.

Billing

The MBS Feature Display does not affect billing.

Station Message Detail Recording

The MBS Feature Display does not affect Station Message Detail Recording.

Datafilling office parameters

The office parameters MBS Feature Display use appear in the following table. Refer to *Office Parameters Reference* Manual for additional information about office parameters.

Office parameters that are used by MBS Feature Display

Table name	Parameter name	Explanation and action
OFCENG	KSET_INTER_GRP_DISP	Specifies if information on calls arriving from out of the customer group appear on the display set of the terminator. Enter Y or N. The default value is N.

MBS Feature Display (continued)

Datafill sequence

The tables that require datafill to implement MBS Feature Display appear in the following table. The tables appear in the correct entry order.

Datafill requirements for MBS Feature Display

Table	Purpose of table
OFCENG	Office Engineering. This table contains data on engineering parameters for the office. See “Datafilling office parameters" for how MBS Feature Display affects office parameters.
CUSTSTN	Customer Group Station Option. This table contains the station options assigned to each customer group.
KSETINV (Note)	Business Set and Data-Unit Inventory. The business set and add-on module data appear in this table.
Note: The entry of this table occurs through SERVORD. A datafill procedure or example is not available. See “SERVORD" for an example of how to use SERVORD to enter data in this table.	

Datafilling table CUSTSTN

Table CUSTSTN (Customer Group Station Option) contains the station options assigned to each customer group. The entry of data in this table must occur to define the number of digits to display for intragroup calls.

The datafill for MBS Feature Display for table CUSTSTN appears in the following table. The fields that apply to MBS Feature Display appear in this table. See the data schema section of this document for a description of the other fields.

Datafilling table CUSTSTN

Field	Subfield or refinement	Entry	Explanation and action
OPTION		DISPDIGS	Option. This field specifies the display digits option. Enter DISPDIGS.

Datafill example for table CUSTSTN

Sample datafill for table CUSTSTN appears in the following example.

MAP example for table CUSTSTN

```
TABLE:  CUSTSTN

CUSTNAME    OPTNAME                          OPTION
_____________________________________________________________

 MDCGRP1    DISPDIGS                         DISPDIGS
```

Tools for verifying translations

The MBS Feature Display does not use tools for verifying translations.

SERVORD

The entry of data in table KSETINV occurs through SERVORD.

The business set and add-on module data appear in table KSETINV (Business Set and Data-Unit Inventory).

Option DISP indicates that a business set on a PSET line is a display business set. Use the Service Order System (SERVORD) to assign option DISP to a business set. Use the ADO (add option) command to add option DISP to a line. Use the DEO (delete option) command deletes option DISP from a line.

SERVORD limits

The MBS Feature Display does not have SERVORD limits.

SERVORD prompts

The SERVORD prompts to assign MBS Feature Display to a business set appear in the following table.

SERVORD prompts for MBS Feature Display

Prompt	Valid input	Explanation
DN_OR_ LEN	7-digit DN or LEN	Specifies the 7-digit DN or LEN of the line to change. Enter the DN or LEN.
OPTKEY	1 to 69	Indicates the key on an MBS to which the assignment of an option occurs. Enter a value from 1 to 69.
OPTION	DISP	Indicates the name of the option. Enter DISP.

Note: The system enters data in table KSETINV when SERVORD assigns the MBS Feature Display.

MBS Feature Display (end)

SERVORD example for MBS Feature Display

Use of the ADO command to add the MBS Feature Display to a current line appears in the following SERVORD example.

SERVORD example for MBS Feature Display in prompt mode

```
SO:
> ADO
SONUMBER:   NOW 88  12  8   PM
>
DN_OR_LEN:
> 2 0 0 8
OPTKEY:
> 2
OPTION:
> DISP
OPTKEY:
> $
```

SERVORD example for MBS Feature Display in no-prompt mode

```
>ADO $ 2 0 0 8 2 DISP $
```

MBS Group Intercom

Ordering codes

Functional group ordering code: MDC00007

Functionality ordering code: does not apply

Release applicability

BCS16 and later versions

Requirements

To operate, MBS Group Intercom has the following requirements:

- BAS Generic, BAS00003
- MDC Minimum, MDC00001

Description

The MBS Group Intercom (GIC) allows an end user to terminate on a member of a selected group using abbreviated dialing. An intercom group can have a maximum size of ten members, 1000 members, or 10 000 members. End users in a ten member group dial a single digit, 0 to 9, to reach others members in their group. End users in a 100 member group dial a two digit number, 00 to 99. In a 1000 member group, end users dial a three digit code, 100 to 999. In a 10 000 member group, end users dial a four digit code, 0000 to 9999. A Meridian business set (MBS) can have members of several different GIC groups. A separate feature key must represent each group.

The DMS-100 switch accommodates a maximum of 4095 GIC groups. You can assign each GIC group to one large customer group. You can assign each GIC group to many customer groups.

Note: For 500/2500 sets to use MBS Group Intercom, the sets require the Multiple Variety Package (MVP) dial plan option (NTX436AA).

Operation

To activate MBS Group Intercom, the end user presses the GIC key. The end user dials the correct number of digits. If the call terminates on another MBS, the system rings the GIC key associated with the originating GIC group. The called party must press the GIC key to answer. If the call terminates on a Unity or 500/2500 set, the called party goes off-hook to answer the call. Digits dialed after the end user presses a GIC key appear as dialed. Calls incoming on a GIC key display the GIC member number of the originator.

The user can press another key while a call is active on the GIC key in non-dialing state. In this event, the system places the GIC call on hold. The

MBS Group Intercom (continued)

key can be originating or terminating. The directory number (DN) key becomes active.

Translations table flow

A description of the MBS Group Intercom translations table appears in the following paragraph.

Table KSETLINE (Business Set and Data Unit Line Assignment) defines the business set and data unit numbers that the switch supports. This table defines the hardware options assigned to each number.

Assignment of the GIC feature, field FORMAT, occurs to a specified key and a specified member number. The specified key is in field KSETKEY, subfield KEY. The specified number is in field DNRESULT, subfield MEMBER. Subfield ICMGRP specifies a name for the group. To reach a member in the same group from an MBS, the end user presses the GIC key. The end user dials a specified member number. Subfield IGNORMSB (Y, N) is an enhancement to this feature in BCS25. With feature AL0619 (Make Set Busy Except GIC) the group member continues to receive GIC calls or calls to specified DNs. For this reception, the Make Set Busy Feature must be active.

The MBS Group Intercom translation process appears in the following flowchart. The addition of MBS Group Intercom to an MBS through SERVORD appears in the flowchart and data. The MBS end user dials another member in the group. To perform this action, the end user presses the GIC key and dials the correct number of digits.

MBS Group Intercom (continued)

Table flow for MBS Group Intercom

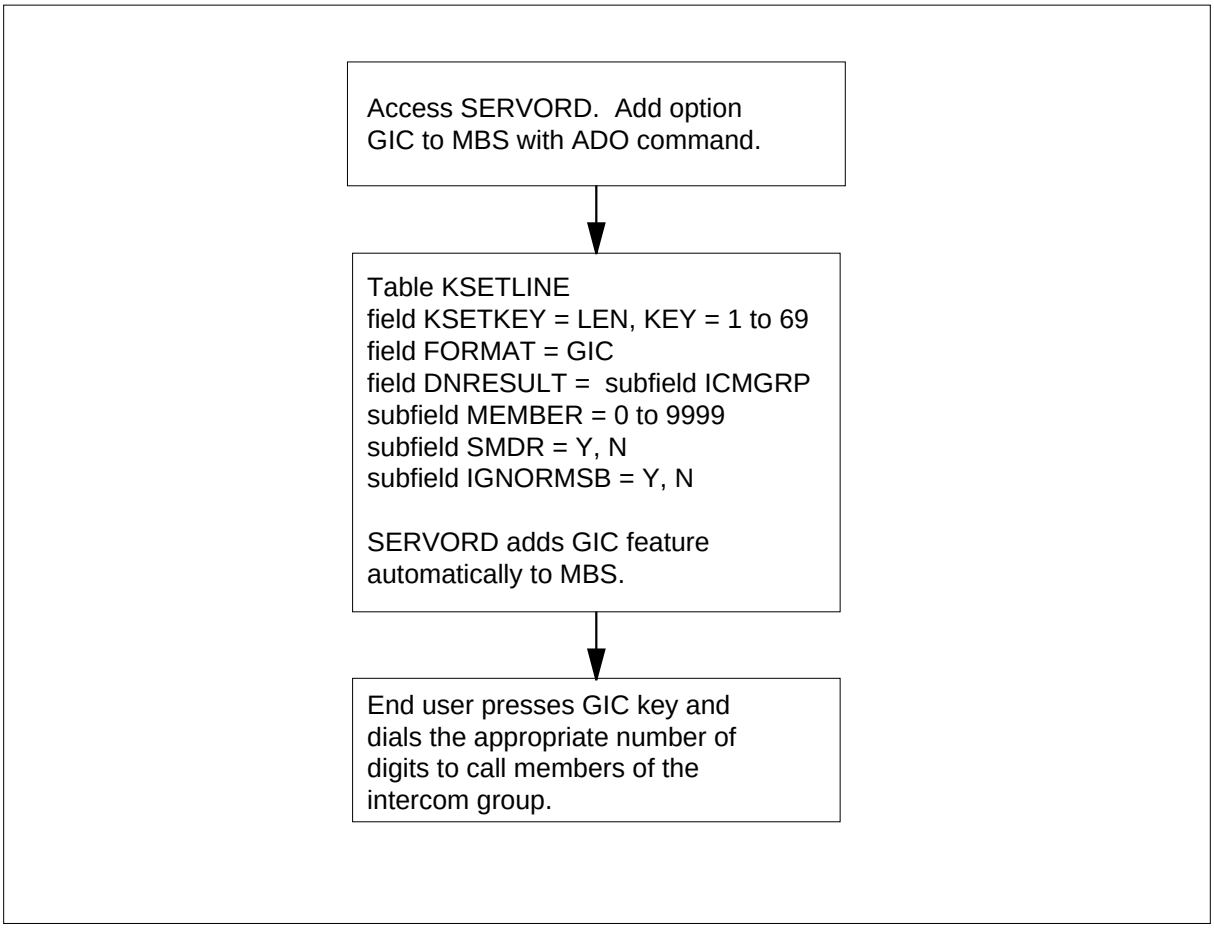

The datafill content for the flowchart appears in the following table.

Datafill example for MBS Group Intercom

Datafill table	Example data
KSETLINE	HOST 02 0 00 13 8 GIC SMITH 3 N Y

Limits

The following limits apply to MBS Group Intercom:

- All members of a GIC group must be members of the same customer group.
- The GIC key cannot be the first key assigned to a call pickup (CPU) group. This condition does not apply when the key is the only key assigned to the CPU group.

MBS Group Intercom (continued)

- On an MBS, assignment of MBS Group Intercom can occur to a feature key only. The feature cannot be code activated.
- The Multiple Appearance Directory Number (MADN) feature, Speed Calling, and Directed Call Pickup (DCPU and DCPX) are not compatible with MBS Group Intercom.
- Flash features already compatible with MBS Group Intercom as key features are compatible in the dialed feature access code mode.
- Code access features cannot be in use with MBS Group Intercom unless the features begin with an asterisk (*) or octothorpe (#). If the features begin with a * or #, dialing ambiguity results.
- The system records the primary directory number (PDN) of an MBS as the originator in Station Message Detail Recording (SMDR) on a GIC call.

Interactions

The interactions between MBS Group Intercom and other functionalities appear in the following paragraphs.

Call Forwarding (CFW)

Assignment of the CFW cannot occur to the same key as MBS Group Intercom.

Call Pickup (CPU)

A CPU group can contain all DNs, all GIC members, or a group. The user can answer GIC and DN calls on a single CPU key assigned to an MBS. The end user presses an idle DN key or the GIC key. The end user presses the CPU key. Calls picked up with a GIC key are subject to GIC limits and interactions. If an MBS has CPU through an access code, DN and GIC calls are picked up on a DN key.

Call Waiting (CWT)

Assignment of the CWT can occur to a GIC key. When the GIC key is busy, the system routes all calls to the key assigned CWT.

Executive Busy Override

Executive busy override can apply to a GIC call. All three parties involved must be in the same intercom group.

Hunt Group Series Completion

Any member of a series completion (SCMP) chain can be a member of a GIC. If the station is terminated on as a GIC member, the SCMP chain is not followed. If the station is terminated on as a DN, the SCMP chain can be followed.

Make Set Busy (MSB)

Assignment of MSB and GIC can occur to an MBS. In this event, attempts to terminate to a DN or GIC code result in busy tone.

Ring Again (RAG) and Call-Back Queuing (CBQ)

The RAG and CBQ can apply to a group intercom call. To answer a RAG/CBQ recall, the end user must press the GIC key of that intercom group. The end user must press the RAG key. If the end user makes an error, the system gives reorder tone. The end user must reinitiate the RAG answer. The system records recalls answered on a GIC key in SMDR as answered on the PDN.

Speed Calling

Speed calling is not compatible with GIC.

30-Port Conference

To establish a 30-port conference with GIC, the member presses the CONF30 key followed by the code of the other members. The member can repeat this action for a maximum of 30 members of the same intercom group. The system does not allow addition of a DN.

Three-Way Calling (3WC)

To implement a 3WC on a GIC call in progress, the end user presses the 3WC key. The end user enters the code of the new member. The system does not allow three-way calling to a DN from an established GIC call. The user must press the 3WC key again when the third party answers to establish the three-way call.

Call Transfer

A party on a GIC call can transfer the call to other members of the same intercom group only.

Activation/deactivation by the end user

The MBS Group Intercom feature does not require activation or deactivation by the end user.

Billing

The MBS Group Intercom feature does not affect billing.

Station Message Detail Recording

The RAG and CBQ can apply to a group intercom call. To answer a RAG/CBQ recall, the end user must press the GIC key of the intercom group. The end user must press the RAG key. If the end user makes an error, the

MBS Group Intercom (continued)

system gives reorder tone. The end user must reinitiate the RAG answer. The system records recalls answered on a GIC key in SMDR as answered on the PDN.

Datafilling office parameters

The MBS Group Intercom feature does not affect office parameters.

Datafill sequence

The tables that require datafill to implement MBS Group Intercom appear in the following table. The tables appear in the correct entry order.

Datafill requirements for MBS Group Intercom

Table	Purpose of table
KSETLINE	Business Set And Data-Unit Line Assignment Table. This table contains the directory number appearances for business sets and data units. ***Note:*** Use SERVORD to enter data in this table. A datafill procedure or example is not available. See “SERVORD" for an example of using SERVORD to enter data in this table.

Tools for verifying translations

The MBS Group Intercom feature does not use tools for verifying translations.

SERVORD

The assignment of option GIC occurs with the Service Order System (SERVORD) command ADO (add option). Use the DEO (delete option) command to remove option GIC. Option GIC allows an end user to use abbreviated dialing to terminate a call on a group member of a specified intercom group. To access group members, the end user uses abbreviated dialing determined by group size.

SERVORD limits

The MBS Group Intercom feature does not have SERVORD limits.

MBS Group Intercom (continued)

SERVORD prompts

The SERVORD prompts used to assign MBS Group Intercom to a current line appear in the following table.

SERVORD prompts for MBS Group Intercom

Prompt	Valid input	Explanation
DN_OR_ LEN	seven-digit DN or LEN	Specifies the seven-digit DN or line equipment number (LEN) of the line to change. Enter the DN or LEN.
OPTKEY	1 to 69	Indicates the key on an MBS to which assignment of an option occurs. Enter a value from 1 to 69.
OPTION	GIC	Indicates the name of the option. Enter GIC.
GICNAME	Any name, a maximum of eight characters	Indicates the name for the group intercom line. Enter a name of a maximum of eight characters.
GICMEMNO	Any number, a maximum of four digits	Specifies the digits dialed to reach a line. Enter a maximum of four digits.
GICSMDR	Y, N	Indicates if SMDR records are a requirement. Enter Y or N.
GICNOMSB	Y, N	Indicates if group intercom calls are exempt from MSB. Enter Y or N.

Note: Use SERVORD to enter data in table KSETLINE when you assign MBS Group Intercom.

SERVORD example for assigning MBS Group Intercom

The assignment of option GIC to an MBS using the ADO command appears in the following SERVORD example. Assignment of option GIC occurs to key 5. The designated name of the line is SMITH. The GIC member number (GICMEMNO) is 24. The SMDR records are a requirement.

MBS Group Intercom (end)

SERVORD example for MBS Group Intercom in prompt mode

```
SO:
> ADO
SONUMBER:   NOW 87  10  10  PM
>
DN_OR_LEN:
> 2 1 2 11
OPTKEY:
> 5
OPTION:
> GIC
GICNAME:
> SMITH
GICMEMNO:
> 24
GICSMDR:
> Y
GICNOMSB:
> N
OPTKEY:
> $
```

SERVORD example for MBS Group Intercom in no-prompt mode

```
>ADO  $  2 1 2 11  5  GIC  SMITH  24  Y  N  $
```

MBS Held Calls

Ordering codes

Functional group ordering code: MDC00007

Functionality ordering code: does not apply

Release applicability

BCS14 and later versions

Requirements

To operate, MBS Held Calls has the following requirements:

- BAS Generic, BAS00003
- MDC Minimum, MDC00001

Description

The MBS Held Calls feature allows a Meridian business set (MBS) end user to hold an established call on a directory number (DN) on the MBS. The end user can start or receive another call on another idle DN.

Operation

The MBS Held Calls feature has two categories. The categories are hold and automatic hold.

To operate the normal hold option, the end user presses the Hold key. The system places the active DN on hold. The associated lamp changes from on to flashing.

To operate the automatic hold option, the end user presses any channel-associated key, like the DN, Conference, or Call Waiting (CWT) key. The end user performs this action if a call is on the CWT key.

To access a held call, the end user presses the key associated with the held call.

Translations table flow

The MBS Held Calls feature does not affect translations table flow.

Limits

The MBS Held Calls feature does not have limits.

Interactions

The MBS Held Calls feature does not have functionality interactions.

MBS Held Calls (end)

Activation/deactivation by the end user

The MBS Held Calls feature does not require activation or deactivation by the end user.

Billing

The MBS Held Calls feature does not affect billing.

Station Message Detail Recording

The MBS Held Calls feature does not affect Station Message Detail Recording.

Datafilling office parameters

The MBS Held Calls feature does not affect office parameters.

Datafill sequence

The MBS Held Calls feature does not affect datafill.

Tools for verifying translations

The MBS Held Calls feature does not use tools for verifying translations.

SERVORD

The MBS Held Calls feature does not use SERVORD.

MBS Individual Business Line

Ordering codes

Functional group ordering code: MDC00007

Functionality ordering code: does not apply

Release applicability

BCS14 and later versions

Requirements

To operate, MBS Individual Business Line has the following requirements:

- BAS Generic, BAS00003
- MDC Minimum, MDC00001

Description

The MBS Individual Business Line allows the assignment of a plain old telephone service (POTS) line as a directory number (DN) on a Meridian business set (MBS). This line is a private business line (PBL). The seven-digit DN associated with the line has a POTS dialing plan.

Operation

An association occurs between a customer group and the MBS Individual Business Line. To the end user, the MBS Individual Business Line is separate from the customer group. All calls that originate on the PBL key are direct outward dial (DOD) calls, including calls in the customer group. If a seven-digit number appears on the label of the key, the end user differentiates between the PBL key and the DN key.

Each customer group can have several PBLs. All PBLs must be assigned to the same network class of service (NCOS) number. This different NCOS number can assign a translator option to specify restrictions in dialing. A PBL normally has a dedicated trunk, trunk type IBNT2 or IBNTO. Table IBNRTE (IBN Route) points to these trunks with the route selector in table IBNXLA (IBN Translation).

Translations table flow

The MBS Individual Business Line translations tables appear in the following list:

- Table KSETLINE (Business Set and Data Unit Line Assignment) defines the business set and data unit numbers that the switch supports. Table KSETLINE defines the hardware options assigned to each business set and

MBS Individual Business Line (continued)

data unit number. Enter data in this table with the assigned line in SERVORD.

- Table KSETFEAT (Business Set and Data Unit Feature) lists the line features assigned to the business sets and data units that appear in table KSETLINE.
- Table NCOS (Network Class of Service) contains the NCOS numbers assigned to each attendant console, MDC station, and incoming IBN trunk group. Table NCOS contains the NCOS numbers assigned to the incoming side of a two-way IBN trunk group, authorization code, and customer group. The NCOS defines the specified features or dialing patterns available to the stations, trunks, or consoles in a customer group.
- Table IBNXLA (IBN Translation) stores the data for the digit translation of calls from an IBN station, an attendant console (AC), or an incoming side of a two-way IBN trunk group. This table for MBS Individual Business Line makes sure that the system routes the call to an IBNT0 or IBNT2 trunk group. This process must occur even if the end user dials the first digit from the PBL.
- Table IBNRTE contains route lists. A route reference index number identifies each route list.
- Table TRKGRP (Trunk Group) contains the datafill for the IBNTO (IBN Outgoing) or IBNT2 (IBN Two Way). For the MBS Individual Business Line, all PBL lines in the customer group must associate with one trunk group.

The MBS Individual Business Line translation process appears in the following flowchart.

MBS Individual Business Line (continued)

Table flow for MBS Individual Business Line

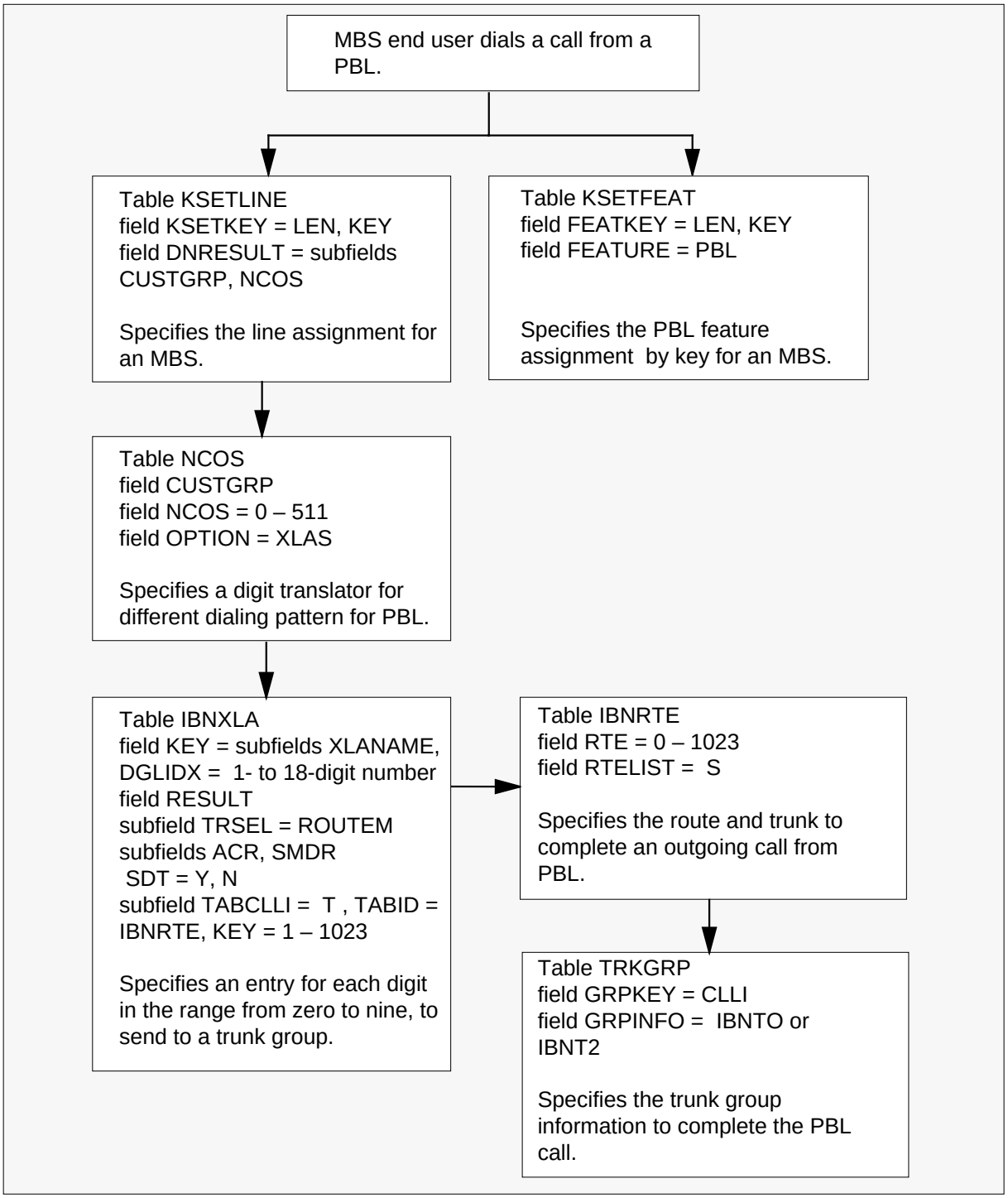

MBS Individual Business Line (continued)

Datafill content for the flowchart appears in the following table.

Datafill example for MBS Individual Business Line

Datafill table	Example data
KSETLINE	HOST 00 0 03 08 1 DN Y 5554396 MDCGRP1 0 40 919 $
KSETFEAT	HOST 0 0 3 08 6 PBL PBL
NCOS	MDCGRP1 40 MDCPBL 0 0 XLAS PBLXLA NXLA NDGT $
IBNXLA	PBLXLA 0 ROUTE N Y N N 1 15 NDGT N T IBNRTE 1
	PBLXLA 1 ROUTE N Y N N 1 15 NDGT N T IBNRTE 1
	PBLXLA 2 ROUTE N Y N N 1 15 NDGT N T IBNRTE 1
	PBLXLA 3 ROUTE N Y N N 1 15 NDGT N T IBNRTE 1
IBNRTE	1 S N N N N PBLTRK1 $
TRKGRP	PBLTRK1 IBNT2 0 NPDGP NCRT NETWORK 0 MIDL 0 N ANSDISC 0
	N N N N N N Y 0 0 N 0 0 0 0 N N N N N N N N NATL $

Limits

The following limits apply to MBS Individual Business Line:

- All features assigned on an MBS (key and code accessed) are not allowed on the PBL, except hold and release.
- A minimum of one PBL for each set is allowed.
- A PBL cannot be the primary directory number (PDN) on an MBS.
- The PBL simulates a POTS line.
- You can use table NCOS to restrict PBLs.
- To access an idle channel, press a PBL key. This action is the only action required for access.
- A PBL does not have a second dial tone.
- All flashes on a PBL are ignored.

Interactions

The interactions between MBS Individual Business Line and other functionalities appear in the following paragraphs.

- The following IBN line options are correct on PBLs:
  - time and charge services on 1 + calls (ATC)
  - call detail recording (CDR)
  - denied origination service (DOR)
  - denied termination service (DTM)
  - essential line service (ELN)
  - free number termination (FNT)
  - no double connection (NDC)
  - no receiver off-hook tone (NOH)
  - operator number identification (ONI)
  - plug up (PLP)
  - restricted sent paid (RSP)
  - suspend service (SUS)
  - toll essential service (TES)
- The following MBS features that possess a key are incorrect for PBLs:
  - call transfer
  - three-way calling (3WC)
  - ring again
  - speed calling
  - automatic dial
  - conference six-port
  - intercom
  - malicious call trace
  - busy override

MBS Individual Business Line (continued)

- — automatic answer back
- — make set busy

- The following features are incorrect for PBLs:
  - — call pickup
  - — call forward
  - — call waiting
  - — automatic line
  - — special billing
  - — denied incoming
  - — subscriber line usage
  - — multiple access directory number (MADN)
  - — code access call park
  - — code access speed calling

Activation/deactivation by the end user

The MBS Individual Business Line does not require activation or deactivation by the end user.

Billing

The MBS Individual Business Line does not affect billing.

Station Message Detail Recording

Station Message Detail Recording (SMDR) can apply to an MBS Individual Business Line.

Datafilling office parameters

The MBS Individual Business Line does not affect office parameters.

Datafill sequence

The tables that require datafill to implement MBS Individual Business Line. appear in the following table. The tables appear in the correct entry order.

Datafill requirements for MBS Individual Business Line

Table	Purpose of table
TRKGRP	Trunk Group. This table contains the datafill for the IBNTO or IBNT2.
NCOS	Network Class of Service. This table contains the specified features or dialing patterns available to the stations, trunks, or consoles in a customer group.
IBNRTE	IBN Route. This table contains route lists. A route reference index number identifies each route list.
IBNXLA	IBN Translation. This table contains data for the digit translation of calls from an IBN station, an AC, or an incoming side of a two-way IBN trunk group.
KSETFEAT (Note)	Business Set and Data-Unit Feature Table. This table lists the line features assigned to the business sets and data units (DUs) in table KSETLINE. This table lists the Meridian digital telephone sets and DUs in table IVDINV.
Note: Use SERVORD to enter data in this table. A datafill procedure or example is not provided. See “SERVORD" for an example of using SERVORD to enter this table.	

Datafilling table TRKGRP

Table TRKGRP contains the datafill for the IBNTO or IBNT2. The recommendation for the MBS Individual Business Line feature is that all PBL lines in the customer group be associated with one trunk group.

Datafill for MBS Individual Business Line for table TRKGRP appears in the following table. The fields that apply to MBS Individual Business Line appear

MBS Individual Business Line (continued)

in this table. See the data schema section of this document for a description of the other fields.

Datafilling table TRKGRP

Field	Subfield or refinement	Entry	Explanation and action
GRPKEY		see subfield	Group Key. This field contains subfields CLLI, and GRPTYP that affect this feature.
	CLLI	see subfield	Common Language Location Identifier. This subfield identifies the name of the trunk group first assigned in Table CLLI.
	GRPTYP	see subfield	Trunk Group Type. This field specifies the trunk group type of IBNTO or IBNT2 in use for the MBS Individual Business Line.

Datafill example for table TRKGRP

Sample datafill for table TRKGRP appears in the following table.

MAP example for table TRKGRP

```
      GRPKEY                 GRPINFO
_____________________________________________________________

PBLTRK1  IBNT2 0 NPDGP NCRT MDCGRP1 0 MIDL 40 N ANSDISC 0
N N N N N N Y 0 0 N 0 0 0 0 N  N  N  N  N N  N  N NATL $
```

Datafilling table NCOS

Table NCOS contains the specified features or dialing patterns available to the stations, trunks, or consoles in a customer group.

Datafill for MBS Individual Business Line for table NCOS appears in the following table. The fields that apply to MBS Individual Business Line appear

in this table. See the data schema section of this document for a description of the other fields.

Datafilling table NCOS

Field	Subfield or refinement	Entry	Explanation and action
OPTIONS		see subfield	Options. This field contains subfield NCOSOPTN to define a maximum of 17 options and refinements associated with the NCOS. Enter XLAS to assign the preliminary translator option. This option is a requirement for MBS Individual Business Line to assign a different translator than the translator defined for the customer group.
	NCOSOPTN	see subfield	Network Class of Service Option. This subfield contains PRELMXLA, FEATXLA, and DGCOLNM. For the MBS Individual Business Line feature, enter the name of the translator under subfield PRELMXLA.
	PRELMXLA	1 to 8	Preliminary Translator. This subfield is a requirement when the preliminary translator assigned to the NCOS number is not identical to the translator assigned in table CUSTHEAD for the customer group. Enter the 1 to 8 character for the preliminary translator.

Datafill example for table NCOS

Sample datafill for table NCOS appears in the following example.

MAP example for table NCOS

```
CUSTGRP   NCOS   NCOSNAME   LSC   TRAFSNO          OPTIONS
_____________________________________________________________

MDCGRP1    40     MDCPBL     0     0
                                   XLAS PBLXLA NXLA NDGT
```

Datafilling table IBNRTE

Table IBNRTE contains route lists. A route reference index number identifies each route list.

MBS Individual Business Line (continued)

Datafill for MBS Individual Business Line for table IBNRTE appears in the following table. The fields that apply to MBS Individual Business Line appear in this table. See the data schema section of this document for a description of the other fields.

Datafilling table IBNRTE

Field	Subfield or refinement	Entry	Explanation and action
RTE		1 to 1023	Route Reference Index. This field contains a route reference number. Enter a value from 1 - 1023.
RTELIST		see subfield	Route List. This field contains several subfields, of which IBNRTSEL and CLLI apply to this feature.
	IBNRTSEL	see subfield	IBN Route Selector. This subfield specifies the required route selector when the digits dialed are the same as the digits outpulsed. Enter S.
	CLLI	see subfield	Common Language Location Identifier. This subfield specifies the name of the trunk to route to complete the translations. Table CLLI must first identify the name before the name is referenced here.

Datafill example for table IBNRTE

Sample datafill for table IBNRTE appears in the following example.

MAP example for table IBNRTE

```
RTE    RTELIST
_____________________________________________________________

 1      S           N  N  N N                PBLTRK1 $
```

Datafilling table IBNXLA

Table IBNXLA contains the data for the digit translation of calls from an IBN station and an AC. Table IBNXLA contains data for the digit translation of calls from an incoming side of a two-way IBN trunk group. This table for MBS Individual Business Line makes sure that the system routes the call to an IBNT0 or IBNT2 trunk group. This process must occur even if the end user

MBS Individual Business Line (continued)

dials the first digit from the PBL. The range of digits 0 to 9 must appear in this table and route to the correct trunk.

Datafill for MBS Individual Business Line for table IBNXLA appears in the following table. The fields that apply to MBS Individual Business Line appear in this table. See the data schema section of this document for a description of the other fields.

Datafilling table IBNXLA

Field	Subfield or refinement	Entry	Explanation and action
RESULT		see subfield	Result. This field contains subfields TRSEL, ACR, SMDR, NOACDIGS, SDT, MINDIGS, DGCOLNM, INTRAGROUP, TABCLLI, TABID and KEY. The subfields specified for this feature are TRSEL, TABCLLI, TABID and KEY.
	TRSEL	ROUTE	Translation Selector. This field specifies the translation selector. Enter ROUTE when the digit or digits dialed represent access to an outgoing or two-way trunk group. Translations route to table CLLI through tables IBNRTE or OFRT.
	TABCLLI	T	Table or CLLI. This subfield specifies the table name or CLLI selector. Enter T.
	TABID	IBNRTE, OFRT, IBNRT2, IBNRT3, IBNRT4, OFR2, OFR3, or OFR4	Table Identifier. This subfield specifies the table to which translations routes. Enter IBNRTE, OFRT, IBNRT2, IBNRT3, IBNRT4, OFR2, OFR3, or OFR4.
	KEY	1 to 1023	Key. This subfield specifies the route reference index number in tables IBNRTE or OFRT. Enter a value 1 to 1023.

Datafill example for table IBNXLA

Sample datafill for table IBNXLA appears in the following example.

MBS Individual Business Line (continued)

MAP example for table IBNXLA

```
      KEY                                          RESULT
 ------------------------------------------------------------------------

PBLXLA 0  ROUTE  N  Y  N  N  1  15  NDGT  N  T  IBNRTE 1
PBLXLA 1  ROUTE  N  Y  N  N  1  15  NDGT  N  T  IBNRTE 1
PBLXLA 2  ROUTE  N  Y  N  N  1  15  NDGT  N  T  IBNRTE 1
PBLXLA 3  ROUTE  N  Y  N  N  1  15  NDGT  N  T  INBRTE 1
PBLXLA 4  ROUTE  N  Y  N  N  1  15  NDGT  N  T  IBNRTE 1
```

Tools for verifying translations

MBS Individual Business Line does not use tools for verifying translations.

SERVORD

Use SERVORD to enter data in table KSETFEAT.

Table KSETFEAT lists the line features assigned to the business sets and DUs that appear in table KSETLINE. The Meridian digital telephone sets and DUs appear in table IVDINV.

Assigned option PBL uses the Service Order System (SERVORD) command ADO (add option). Use the DEO (delete option) command removes option PBL. Option PBL allows a business set to have a seven-digit POTS line assigned as a DN on the set. This seven-digit number has a POTS dialing plan.

SERVORD limits

The MBS Individual Business Line does not have SERVORD limits.

SERVORD prompts

The SERVORD prompts used to assign MBS Individual Business Line to an current line appears in the following table.

SERVORD prompts for MBS Individual Business Line (Sheet 1 of 2)

Prompt	Correct input	Explanation
DN_OR_ LEN	7-digit DN or LEN	The specified 7-digit DN or LEN of the line to changed. Enter the DN or LEN.

MBS Individual Business Line (end)

SERVORD prompts for MBS Individual Business Line (Sheet 2 of 2)

Prompt	Correct input	Explanation
OPTKEY	1 to 69	Indicates the key on an MBS that is assigned an option. Enter a value from 1 to 69.
OPTION	PBL	Indicates the name of the option. Enter PBL.

Note: Use SERVORD to enter data in table KSETFEAT to assign MBS Individual Business Line.

SERVORD example for adding MBS Individual Business Line

How to add MBS Individual Business Line to a current line using the ADO command appears in the following SERVORD example.

SERVORD example for MBS Individual Business Line in prompt mode

```
SO:
> ADO
SONUMBER:   NOW 87  10  10  PM
>
DN_OR_LEN:
> 2 1 2 11
OPTKEY:
> 7
OPTION:
> PBL
OPTKEY:
> $
```

SERVORD example for MBS Individual Business Line in no-prompt mode

```
>ADO  $  2 1 2 11  7  PBL  $
```

MBS Intercom

Ordering codes

Functional group ordering code: MDC00007

Functionality ordering code: does not apply

Release applicability

BCS14 and later versions

Requirements

To operate, MBS Intercom has the following requirements:

- BAS Generic, BAS00003
- MDC Minimum, MDC00001

Description

The MBS Intercom allows an end user to press the Intercom (ICM) key to terminate on a selected Meridian business set (MBS).

If directory numbers (DN) are not active on the terminating MBS, audible ringing occurs and the ICM key of the terminator flashes. The terminator can press the ICM key to answer or wait 2 s. When the terminator waits 2 s, an automatic connection occurs.

If busy DNs are on the terminating MBS, a buzzing tone occurs. The system does not make an automatic connection. Press the ICM key to answer the call. The system places the active calls on automatic hold.

You can answer the intercom call on the loudspeaker or through the handset. The entry of both sets can occur to originate or answer an intercom call on the ICM key.

Operation

To operate MBS Intercom, the calling and called parties perform the following steps:

- The calling party lifts the handset, presses the ICM key, and receives ringing tone and silence.
- If active DNs are not on the set of the called party, the called party hears ringing. If active DNs are on the set, the called party hears 2 s of buzz tone. In both occurrences, the lamp next to the ICM key flashes.

- The called party presses the ICM key. The system automatically places any active calls on hold. The lamp next to the ICM key goes on. The lamps next to any active DNs flash.
- The calling party delivers a message. The called party hears the message over the loudspeaker.
- If an answer to the message is a requirement, the called party lifts the handset. This action establishes a two-port call. This event disables the loudspeaker.
- To return to the original call, the called party presses the associated DN key.

Translations table flow

A description of the MBS Intercom translations table appears in the following paragraph.

Table KSETFEAT (Business Set and Data Unit Feature) lists the line features assigned to business sets and data units. Field FEATKEY subfield KEY identifies the key for the MBS Intercom feature. Subfield FEAT and field FEATURE identify the MBS Intercom feature. Field KVAR, subfield LINKLEN, specifies the line equipment number (LEN) of the terminating MBS ICM. Subfield KEY specifies the key of the terminating MBS ICM. Subfield DOR identifies if this ICM member is denied origination. Subfield SMDR identifies if the system produces an SMDR record when access to the ICM key occurs. This feature assignment occurs through SERVORD.

The MBS Intercom translation process appears in the following flowchart. The MBS Intercom feature assignment through SERVORD and the information in table KSETFEAT appear in the flowchart and data.

MBS Intercom (continued)

Table flow for MBS Intercom

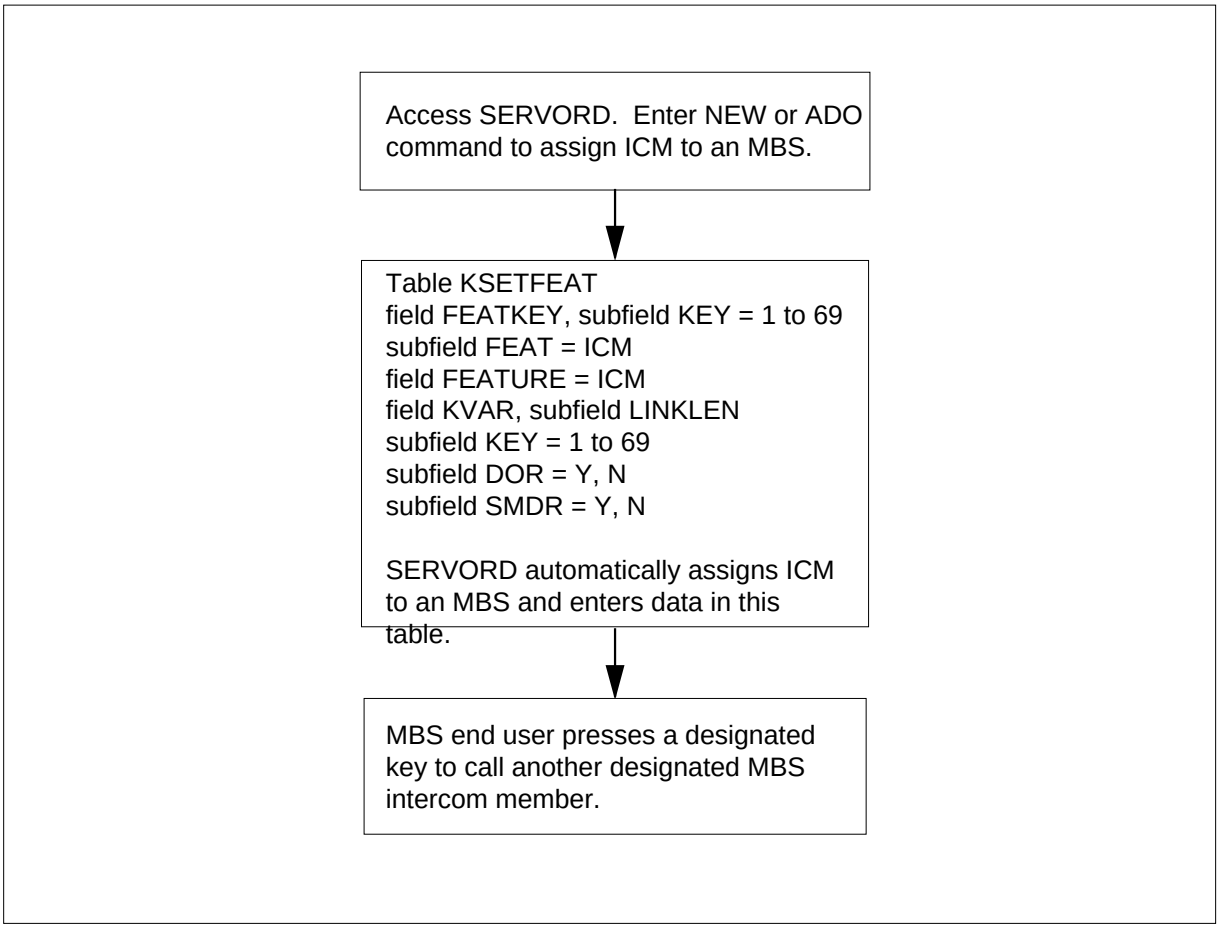

The datafill content for the flowchart appears in the following table.

Datafill example for MBS Intercom

Datafill table	Example data
KSETFEAT	HOST 00 0 06 15 4 ICM ICM 00 1 12 05 6 Y N $

Limits

The following limits apply to MBS Intercom:

- An intercom call cannot contain any active features. The intercom call can be on hold. The system ignores attempts to activate the features.
- Both sets must be MBSs to activate MBS Intercom. Both sets must be MBSs to obtain hands-free, one-way speech path the terminator receives on this call type.

Interactions

A description of the interactions between MBS Intercom and other functionalities appears in the following paragraphs.

Hold

You can place an intercom call on hold.

Make Set Busy

You can make an intercom call to an MBS in the make set busy (MSB) mode.

Activation/deactivation by the end user

To operate the MBS Intercom feature, the calling and called parties perform the following steps.

Activation/deactivation of MBS Intercom by the end user

At your telephone:

1 Calling party lifts handset and presses ICM key.

Response:

Calling party receives ringing tone followed by silence.

If active DNs are not on the set of a called party, called party hears ringing. If active DNs are on set, called party hears 2 s of buzz tone. In both occurrences, the lamp next to ICM key flashes.

2 Called party presses ICM key. The action causes the system to place active calls on hold.

Response:

Lamp next to ICM key goes on. Lamps next to any active DNs flash.

3 Calling party delivers message.

Response:

Called party hears message over loudspeaker.

4 If answer to message is a requirement, the called party lifts the handset.

Response:

The system establishes two-port call between calling and called parties. This action disables the loudspeaker.

5 To return to original call, called party presses the associated DN key.

Response:

The system connects called party to original call again.

Billing

The MBS Intercom does not affect billing.

MBS Intercom (continued)

Station Message Detail Recording

The MBS Intercom does not affect Station Message Detail Recording.

Datafilling office parameters

The MBS Intercom does not affect office parameters.

Datafill sequence

The tables that require datafill to implement MBS Intercom appear in the following table. The tables appear in the correct entry order.

Datafill requirements for MBS Intercom

Table	Purpose of table
KSETFEAT	***Note:*** Use SERVORD to enter data in this table. This document does not provide a datafill procedure. See “SERVORD" for an example of how to use SERVORD to enter data in this table.

Tools for verifying translations

The MBS Intercom does not use tools for verifying translations.

SERVORD

Use the Service Order System (SERVORD) command ADO (add option) to assign option ICM. Use the DEO (delete option) command to remove option ICM. Option ICM allows a business set end user to terminate on a specified business set. Press the ICM feature key to terminate on this set.

SERVORD limits

The MBS Intercom does not have SERVORD limits.

SERVORD prompts

The SERVORD prompts that assign MBS Intercom to a current line appear in the following table.

SERVORD prompts for MBS Intercom (Sheet 1 of 2)

Prompt	Correct input	Explanation
DN_OR_LEN	7-digit DN or LEN	Specifies the 7-digit DN or LEN of the line to change. Enter the DN or LEN.
OPTKEY	1 to 69	Indicates the key on an MBS to which the assignment of an option occurs. Enter a value from 1 to 69.

SERVORD prompts for MBS Intercom (Sheet 2 of 2)

Prompt	Correct input	Explanation
OPTION	ICM	Indicates the name of the option. Enter ICM.
LINK_LEN	Line equipment number	Specifies the LEN of a member of an existing DLH or MLH hunt group to which additional members link. Enter the LEN.
SIC_KEY	1 to 69	Specifies the number for the straight intercom key. Enter a value from 1 to 69.
DOR	Y, N	Indicates if denied origination is allowed. Enter Y or N.
SMDR	Y, N	Indicates if station message detail recording is activated. Enter Y or N.

Note: The system enters data in table KSETFEAT when you use SERVORD to assign MBS Intercom.

SERVORD example for adding MBS Intercom

The procedure to assign MBS Intercom option ICM to key 5 of a business set associated with LEN 2 1 2 29 appears in the following SERVORD example. A second business set, associated with LEN 2 1 2 30, links with the primary set.

MBS Intercom (end)

SERVORD example for MBS Intercom in prompt mode

```
SO:
> ADO
SONUMBER:   NOW 87  10  10  PM
>
DN_OR_LEN:
> 2 1 2 29
OPTKEY:
> 5
OPTION:
> ICM
LINK_LEN:
> 2 1 2 30
SIC_KEY:
> 5
DOR:
> Y
SMDR:
> Y
OPTKEY:
> $
```

SERVORD example for MBS Intercom in no-prompt mode

```
>ADO  $  2 1 2 29  5  ICM  2 1 2 30  5  Y  Y  $
```

MBS Listen on Hold

Ordering codes

Functional group ordering code: MDC00007

Functionality ordering code: does not apply

Release applicability

BCS14 and later versions

Requirements

To operate, MBS Listen on Hold has the following requirements:

- BAS Generic, BAS00003
- MDC Minimum, MDC00001

Description

The MBS Listen on Hold allows the end user to place a called party on hold. The end user can listen to that party through the speaker. The Meridian business set (MBS) end user placed on hold can use this feature. This feature allows the user to replace the handset and listen through the speaker. The user listens and determines when the call reconnects.

Operation

To operate the MBS Listen on Hold feature, the end user performs the following steps:

- Press the Hold key. The lamp next to the directory number (DN) flashes quickly.
- Replace the handset in the cradle.
- Press the DN key next to the quickly flashing lamp. The lamp goes on.
- When you hear the other party through the speaker, lift the handset and continue the conversation.

Translations table flow

The MBS Listen on Hold does not affect translations table flow.

Limits

The MBS Listen on Hold does not have limits.

Interactions

The MBS Listen on Hold does not have functionality interactions.

MBS Listen on Hold (end)

Activation/deactivation by the end user

To operate the MBS Listen on Hold feature, the end user performs the following steps.

Activation/deactivation of MBS Listen on Hold by the end user

At your telephone

1 Press the Hold key.

Response:

Lamp next to the DN flashes quickly.

2 Replace handset in cradle. Press DN key next to quickly flashing lamp.

Response:

Lamp goes on.

3 When you hear the other party through speaker, lift the handset and continue the conversation.

Response:

Lamp remains on.

Billing

The MBS Listen on Hold does not affect billing.

Station Message Detail Recording

The MBS Listen on Hold does not affect Station Message Detail Recording.

Datafilling office parameters

The MBS Listen on Hold does not affect office parameters.

Datafill sequence

The MBS Listen on Hold does not affect datafill.

Tools for verifying translations

The MBS Listen on Hold does not use tools for verifying translations.

SERVORD

The MBS Listen on Hold does not use SERVORD.

MBS MADN SCA/MCA (across Switch)

Ordering codes

Functional group ordering code: MDC00007

Functionality ordering code: does not apply

Release applicability

BCS14 and later versions

Requirements

To operate, the MBS MADN SCA/MCA (across Switch) feature requires BAS Generic, BAS00003.

Description

A multiple appearance directory number (MADN) is a directory number (DN) that appears on more than one Meridian business set (MBS). These DNs are assigned to MBSs that form a MADN group. The MADN groups can have a maximum of 32 members assigned in single call arrangements (SCA) or multiple call arrangements (MCA).

The single call arrangement allows one set to be active, originating or terminating, on the MADN at one time. The multiple call arrangement allows more than one set to be active on the MADN at the same time. The number of members in the MADN group restricts the number of calls that can occur at the same time.

Note 1: In BCS26, the enhanced MADN call control feature (AG0977) changes the MADN single call arrangement (SCA). For additional information, refer to “Enhanced MADN Call Control."

Note 2: Special engineering rules govern the assignment of MADN groups. Contact your local Northern Telecom sales engineer for details.

Operation

With the MADN SCA, an MADN member can originate or pick up an incoming call while the MADN group is idle. When a member of the MADN group is on a call, the lamps of the members that remain turn on. The lamps indicate that the group is busy.

If an MADN member is part of a call and presses the Hold key or another DN key, the system places the calling party on hold. While the system holds a call, the lamps of all MADN group members flash. An MADN member can enter the held call if you press the DN key associated with the MADN group. When

MBS MADN SCA/MCA (across Switch) (continued)

an MADN member accesses the held call again, the lamps of the members of the group turn on. The lamps indicate that the group is busy.

An MADN member can use the MBS privacy release feature. The MBS privacy release feature is across switch. An MADN member uses this feature to allow another member of the MADN group to conference in a call. For additional information, refer to feature description, “MBS Privacy Release (across Switch)."

With the MADN MCA, an MADN member can originate calls and not affect the other members of the group. When an MADN member is active in a call, the lamp of the member turns on. The lamps of the other members in the MADN group turn off. If a MADN member answers an incoming call, the lamps of the other members turn off. The lamps turn off to indicate that the members can make calls on the MADN.

The system queues incoming calls to an MADN group while the callers receive audible ringback tone. The maximum number of calls allowed for an MADN MCA group is equal to the number of MADN members in the group. The calls include originated, answered, and queued calls.

In an MADN MCA group, when the called party answers a call, the system presents the next call to the inactive members. This system repeats this procedure until the queue is empty.

Translations table flow

The MBS MADN SCA/MCA (across Switch) feature uses translations table KSETLINE. Table KSETLINE (Business Set and Data Unit Line Assignment) defines the business set and data unit numbers that the assigned switch and associated hardware options support. The system enters data in the table when the line is assigned in SERVORD. The system can enter data in the table when the MDN feature is associated with an MBS. Subfield MDNTYPE is MCA or SCA, and subfields PRIMARY and RING specify two conditions. The subfields specify if the number is a primary appearance of the MADN group. The subfields specify if ringing applies. Subfields DN, CUSTGRP, SUBGRP, NCOS, and SNPA specify the DN and area code of the MADN and other customer group information.

The MBS MADN SCA/MCA (across Switch) translation process appears in the following flowchart. The assignment of an MADN group through SERVORD and the table information required for MBSs appear in the flowchart. The feature acronym in SERVORD for MADN is MDN.

MBS MADN SCA/MCA (across Switch) (continued)

Table flow for MBS MADN SCA/MCA (across Switch)

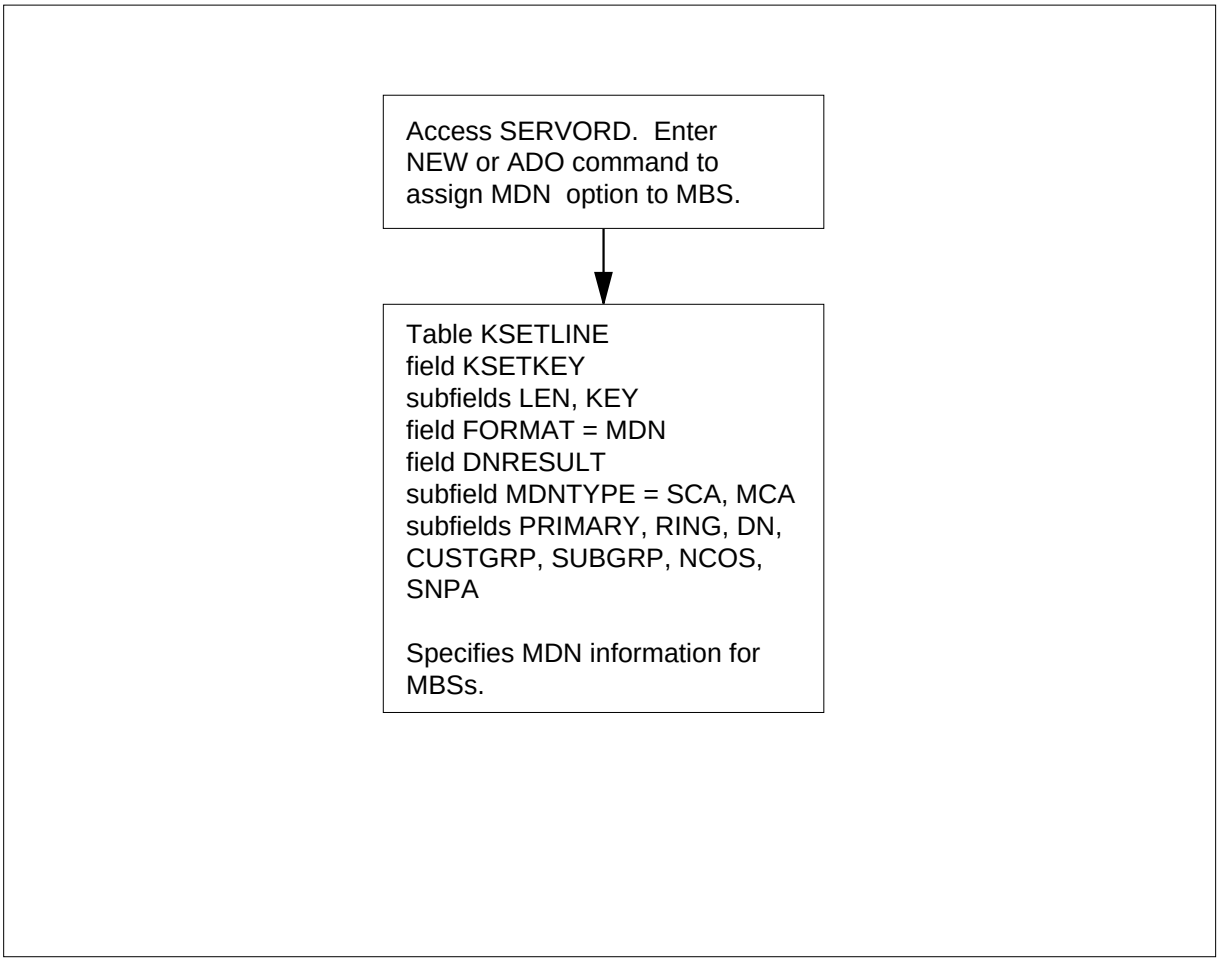

The datafill content of the flowchart appears in the following table.

Datafill example for MBS MADN SCA/MCA (across Switch)

Datafill table	Example data
KSETLINE	HOST 00 0 08 02 3 MDN SCA Y Y 5554396 MDCGRP1 0 0 919 $

Limits

The MBS MADN SCA/MCA (across Switch) feature does not have limits.

Interactions

Descriptions of the interactions between the MBS MADN SCA/MCA (across Switch) feature and other functionalities appear in the following paragraphs.

MBS MADN SCA/MCA (across Switch) (continued)

Call Forwarding

Assignment of call forwarding (CFW) occurs separately for each MADN group. The MADN group must have a primary member. Only the primary member can have the CFW option assigned.

Call Forwarding Don't Answer

For call forwarding don't answer (CFD), the system rings the MADN group for the predefined time before the system forwards the call.

Call Forwarding Intragroup, Call Forwarding Universal

For call forwarding intragroup (CFI) and call forwarding universal (CFU), the primary member can program, activate, and deactivate the feature for the group. The primary member receives the ring splash as the system forwards the call outside the customer group.

Note: When the system forwards a call from a MADN group, a member of that group cannot answer the call.

Call Park

Assignment of call park (PRK) occurs separately for each line or member. The system rings the member that parked the call again when the timer times out. The system can park only one call for each MADN group.

Call Pickup

Assignment of call pickup (CPU) occurs separately for each line or member. The MADN group members can belong to any CPU group or a pickup group.

Call Waiting

Assignment of call waiting (CWT) occurs separately for each line or member for SCA. The system waits incoming calls on the line or set, not the whole MADN group.

Circuit Switched Digital Data Systems

Circuit switched digital data systems and MADNs are mutually exclusive.

Do Not Disturb

Do not disturb (DND) is not compatible with MADN MCA.

Executive Busy Override

Executive Busy Override (EBO) can barge in on MADN SCA calls and MADN MCA calls. For this action to occur, the customer group must have option EBOM entered in Table CUSTSTN (Customer Group Station Option). If the customer group is a MADN MCA group, the barge in occurs on the primary member.

Hunt Groups

Hunt groups (all types) and MADNs are mutually exclusive.

Ring Again

Assignment of ring again (RAG) occurs separately for each line or member. With MADN SCA, RAG behaves the same as for normal lines.

Subscriber Line Usage

Assignment of subscriber line usage occurs separately for each line or member through the use of office equipment numbers.

Three-Way Calling

Assignment of three-way calling (3WC) occurs separately for each line or member. Each DN can have only one active conference.

Uniform Call Distribution

Uniform call distribution (UCD) and MADNs are mutually exclusive.

Activation/deactivation by the end user

The MBS MADN SCA/MCA (across Switch) feature does not require activation or deactivation by the end user.

Billing

The MBS MADN SCA/MCA (across Switch) feature does not affect billing.

Station Message Detail Recording

The MBS MADN SCA/MCA (across Switch) feature does not affect Station Message Detail Recording.

Datafilling office parameters

The office parameters that the MBS MADN SCA/MCA (across Switch) parameter uses appear in the following table. Refer to *Office Parameters Reference Manual* for additional information about office parameters.

Office parameters used by MBS MADN SCA/MCA (across Switch)

Table name	Parameter name	Description
OFCENG	MAX_MADN_MEMBERS_PER_LSG	Specifies the maximum number of MADN members allowed on one line subgroup. Enter a value from 1 to 4. The default value is 4.

MBS MADN SCA/MCA (across Switch) (continued)

Datafill sequence

The tables that require datafill to implement the MBS MADN SCA/MCA (across Switch) feature appear in the following table. The tables appear in the correct entry order.

Datafill requirements for MBS MADN SCA/MCA (across Switch)

Table	Purpose of table
OFCENG	Office Engineering Table. This table contains data on engineering parameters for the office. See “Datafilling office parameters" for how MBS MADN SCA/MCA (across Switch) affects office parameters.
KSETLINE (Note)	Business Set And Data-Unit Line Assignment Table. This table contains the directory number appearances for business sets and data units.
Note: Use SERVORD to enter data in this table. A datafill procedure or example is not available. See “SERVORD" for an example of how to use SERVORD to enter data in this table.	

Tools for verifying translations

The MBS MADN SCA/MCA (across Switch) feature does not use tools for verifying translations.

SERVORD

Use SERVORD to enter data in table KSETLINE. Table KSETLINE (Business Set and Data Unit Line Assignment) contains the directory number appearances for business sets and data units.

Use the ADO (add option) command to assign the MDN option to a current line through the Service Order (SERVORD) system.

SERVORD limits

The MBS MADN SCA/MCA (across Switch) feature does not have SERVORD limits.

MBS MADN SCA/MCA (across Switch) (continued)

SERVORD prompts

The SERVORD prompts that the system uses to assign the MBS MADN SCA/MCA (across Switch) feature to a line appear in the following table.

SERVORD prompts for MBS MADN SCA/MCA (across Switch)

Prompt	Correct input	Description
OPTION	MDN	Specifies the option to assign to the line. Enter MDN.
MDNTYPE	MCA, SCA, EXB	Specifies the MDN type. The MCA specifies multi-call arrangement. The SCA specifies single-call arrangement. The EXB specifies extension bridging.
PRIMARY	Y, N	Specifies if the DN is the primary member of the MADN group. Enter Y or N.
RING	Y, N	Specifies if a ring from a telephone speaker is a requirement in addition to the call waiting tone. Enter Y or N.
DIR_ NUMBER	7- digit DN	Specifies the DN to assign to the MADN line. Enter a DN.

Note: The system enters data in table KSETLINE when the MBS MADN SCA/MCA (across Switch) feature assignment occurs through SERVORD.

SERVORD example for adding MBS MADN SCA/MCA (across Switch)

You can use the ADO command to add the MBS MADN SCA/MCA (across Switch) feature to a line. This procedure appears in the following SERVORD example.

MBS MADN SCA/MCA (across Switch) (end)

SERVORD example for MBS MADN SCA/MCA (across Switch) in prompt mode

```
>ADO
SONUMBER:   NOW 92  1   3   AM
>
DN_OR_LEN:
> 6214444
OPTION:
> MDN
MDNTYPE:
> EXB
PRIMARY:
> Y
RING:
> Y
DIR_NUMBER: 6214444
>
OPTION:
> $
```

SERVORD example for MBS MADN SCA/MCA (across Switch) in no-prompt mode

```
>ADO $ 6214444 MDN EXB Y Y $ $
```

MBS Make Set Busy

Ordering codes

Functional group ordering code: MDC00007

Functionality ordering code: does not apply

Release applicability

BCS14 and later versions

Requirements

To operate, MBS Make Set Busy has the following requirements:

- BAS Generic, BAS00003
- MDC Minimum, MDC00001

Description

The MBS Make Set Busy feature allows directory number (DN) appearances on a Meridian business set (MBS) to be busy to incoming calls. These appearances do not include private business lines, multiple appearance directory number (MADN) group members, and call terminations. Call terminations are call waiting calls, camp-on, and busy override. An MBS can activate the MBS Make Set Busy feature to all calls or intragroup calls only. An MBS that has the MBS Make Set Busy feature active can originate calls from a DN appearance and activate features.

Calls can attempt to terminate while an MBS activates the MBS Make Set Busy feature. These calls receive busy tone or a treatment that is tone or announcement. Intragroup calls that the activation of the MBS Make Set Busy feature blocks receive busy tone. An MBS that activates the MBS Make Set Busy feature does not receive an indication that a call attempts to terminate on this MBS. The indication can be audible or visible.

Operation

To activate MBS Make Set Busy, the end user presses the Make Set Busy (MSB) key. The associated lamp comes on and remains on as long as the feature is active.

To deactivate the MBS Make Set Busy feature, the end user presses the MSB key a second time. The associated lamp goes off.

Note: The MBS can activate or deactivate MBS Make Set Busy feature while the end user is part of an active call. The system ignores attempts to activate or deactivate the MBS Make Set Busy feature during a feature

MBS Make Set Busy (continued)

programming sequence. This sequence can be call forwarding (CFW) or speed calling.

Translations table flow

Descriptions of the MBS Make Set Busy feature translations tables appear in the following list:

- Table KSETFEAT (Business Set and Data Unit Feature) lists the line features assigned to business sets and data units. The MBS Make Set Busy feature is assigned to a specified key (field FEATKEY subfield KEY). Field KVAR subfield KEYLIST specifies the required DNs when the end user activates the MBS Make Set Busy feature. Assignment of the MBS Make Set Busy feature and datafill for this table occurs through SERVORD.
- Table CUSTSTN (Customer Group Station Option) contains the station options assigned to each customer group. Option MSB allows the system to route calls to a treatment other than busy signal when MBS Make Set Busy is active. Subfield MSBTRMT specifies a number in the range of 0 to 63, which is an index to Table IBNTREAT (IBN Treatment). The other allowed treatments are tones, announcements, or a specified lamp on the attendant console. If the default busy signal is acceptable, this option is not a requirement.
- Table IBNTREAT (IBN Treatment) specifies a route index to a tone, recorded announcement, or attendant console for certain MDC calls by customer group. For the MBS Make Set Busy feature, this table only specifies the treatment if the customer group wants a specified treatment. The specified treatment is a treatment other than busy signal. This table specifies the treatment when MBS Make Set Busy is active. The system uses different selectors to route calls in field ITDATA subfield RTESEL. The S and T selectors indicate that the system routes calls to tone or announcement. The C selector indicates that the system routes calls to the attendant console. The TRMT selector indicates that the system routes calls to Table TMTCNTL (Treatment Control).

The MBS Make Set Busy translation process appears in the following flowchart. The tables that the system accesses appear in the flowchart and data. The system accesses these tables when addition of the MBS Make Set Busy feature to an MBS occurs through SERVORD. The system also accesses these tables when the end user activates the MSB feature.

MBS Make Set Busy (continued)

Table flow for MBS Make Set Busy

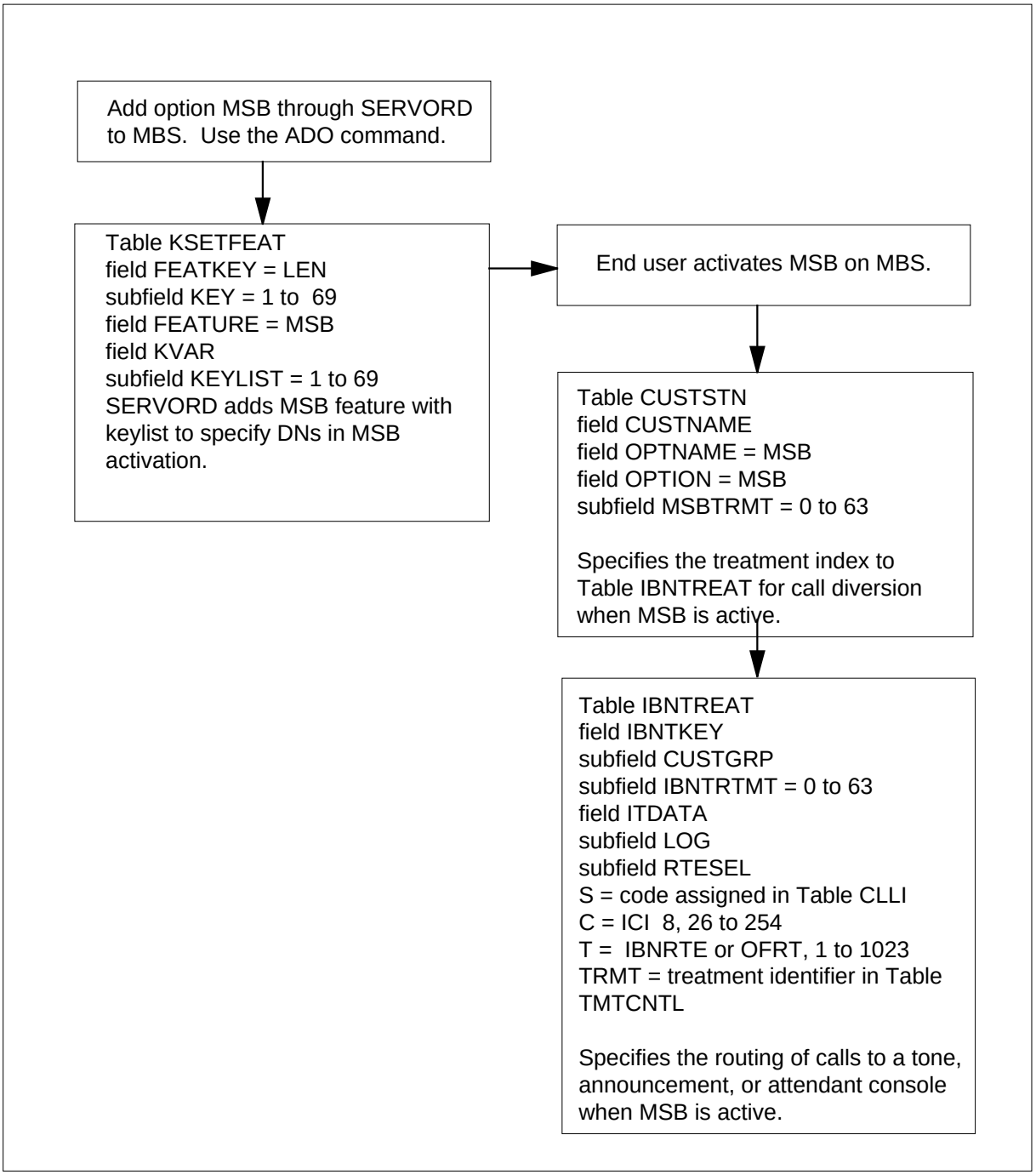

MBS Make Set Busy (continued)

The datafill content of the flowchart appears in the following table.

Datafill example for MBS Make Set Busy

Datafill table	Example data
KSETFEAT	HOST 02 0 00 13 5 MSB MSB N (1) (3) $
CUSTSTN	MDCGRP1 MSB MSB 2
IBNTREAT	MDCGRP1 2 N S MSBANN

Limits

The following limits apply to the MBS Make Set Busy feature:

- If the MBS Make Set Busy feature is active for calls, the attendant receives the message MSB ACTIVE. The attendant also receives 2 s of reorder tone. The attendant receives this tone when the attendant tries to complete to a DN appearance on the made busy set.
- If the MBS Make Set Busy feature is active for intragroup calls, the attendant can terminate on an idle DN appearance. The attendant can terminate if the MBS Make Set Busy feature is active or not active.
- The MADN group members (single or multiple call arrangement) receive a visual alert. This alert indicates that an incoming call attempts to terminate when the MBS Make Set Busy feature is activated. The called party can answer the incoming call with MBS Make Set Busy activated.

Interactions

The interactions between the MBS Make Set Busy feature and other functionalities appear in the following paragraphs.

Attendant Camp-on

Attendant camp-on cannot occur on MBSs in the made busy state.

Busy Verification Line

Busy verification line overrides the MBS Make Set Busy feature.

Call Forwarding Busy, Call Forwarding Don't Answer

Calls to DN appearances that have call forwarding busy (CFB) or call forwarding don't answer (CFD) activated receive a treatment. The calls receive treatments specified for the MBS Make Set Busy feature. The calls receive the treatments while the set is in the made busy state.

Call Forwarding Universal, Call Forwarding Intragroup

The system forwards calls to DN appearances that have call forwarding universal (CFU) or call forwarding intragroup (CFI) activated. The activity of the MBS Make Set Busy feature does not determine if the system forwards the calls.

Call Waiting

If MBS Make Set Busy is active for calls, the system deactivates call waiting (CWT) on DN appearances. The system deactivates CWT while the MBS is in the made busy state. If MBS Make Set Busy is active for intragroup calls, the system does not allow intragroup calls to be call waited on a made busy set.

Do Not Disturb

The MBS Make Set Busy feature has priority over attendant-activated do not disturb (DND). The treatments specified for the MBS Make Set Busy feature apply when two features are activated. The treatments apply when the MBS Make Set Busy feature and DND are activated on a specified line.

Executive Busy Override

The system blocks attempts by incoming calls to activate executive busy override (EBO) on made busy sets. The calling party receives reorder tone as the default treatment and not the busy tone.

Ring Again

Ring again (RAG) requests from other parties must not occur on an MBS in the made busy state.

Activation/deactivation by the end user

The MBS Make Set Busy feature does not require activation or deactivation by the end user.

Billing

The MBS Make Set Busy feature does not affect billing.

Station Message Detail Recording

The MBS Make Set Busy feature does not affect Station Message Detail Recording.

Datafilling office parameters

The MBS Make Set Busy feature does not affect office parameters.

MBS Make Set Busy (continued)

Datafill sequence

The tables that require datafill to implement the MBS Make Set Busy feature appear in the following table. The tables appear in the correct entry order.

Datafill requirements for MBS Make Set Busy

Table	Purpose of table
CUSTSTN	Customer Group Station Option. This table contains the station options for each customer group.
IBNTREAT	IBN Treatment. This table specifies by customer group a route index to a tone, recorded announcement, or attendant console for certain MDC calls.
KSETFEAT (Note)	Business Set and Data-Unit Feature Table. This table lists the line features that are assigned to the business sets and data units (DU) listed in table KSETLINE. This table also lists the Meridian digital telephone sets and DUs that appear in table IVDINV.
Note: Use SERVORD to enter data in this table. A datafill procedure or example is not available. See “SERVORD" for an example of how to use SERVORD to enter data in this table.	

Datafilling table CUSTSTN

Table CUSTSTN (Customer Group Station Option) contains the station options assigned to each customer group. Enter data in table CUSTSTN to associate the MBS Make Set Busy feature with a treatment in Table IBNTREAT. If the treatment is a busy signal, table CUSTSTN does not require datafill.

Datafill for the MBS Make Set Busy feature for table CUSTSTN appears in the following table. Fields that apply to the MBS Make Set Busy feature appear in this table. See the data schema section of this document for a description of the other fields.

Datafilling table CUSTSTN (Sheet 1 of 2)

Field	Subfield or refinement	Entry	Description
OPTION		See subfield	Option. This field contains subfields OPTION and MSBTRMT.

Datafilling table CUSTSTN (Sheet 2 of 2)

Field	Subfield or refinement	Entry	Description
	OPTION	MSB	Option. This subfield specifies the name of the option. Enter MSB.
	MSBTRMT	0 to 63	Make Set Busy Treatment. This subfield specifies the treatment number assigned in Table IBNTREAT to route incoming calls when the *MBS Make Set Busy* feature is active. Enter a value from 0 to 63.

Datafill example for table CUSTSTN

Sample datafill for table CUSTSTN appears in the following example.

MAP example for table CUSTSTN

```
TABLE:  CUSTSTN

 CUSTNAME       OPTNAME              OPTION
_____________________________________________________

MDCGRP1         MSB                  MSB  2
```

Datafilling table IBNTREAT

Table IBNTREAT (IBN Treatment) specifies a route index to a tone, recorded announcement, or attendant console for certain MDC calls by customer group. For the MBS Make Set Busy feature, table IBNTREAT specifies treatments if the customer wants a treatment other than busy signal. The table specifies treatments when the MBS Make Set Busy feature is active.

Datafill for the MBS Make Set Busy feature for table IBNTREAT appears in the following table. Fields that apply to the MBS Make Set Busy feature

MBS Make Set Busy (continued)

appear in this table. See the data schema section of this document for a description of the other fields.

Datafilling table IBNTREAT

Field	Subfield or refinement	Entry	Description
IBNTKY		See subfield	IBN Treatment Key. This field contains subfields CUSTGRP and IBNTRTMT.
	CUSTGRP	1- to 16	Customer Group Name. This subfield specifies the customer group name. Enter the 1 to 16-character name assigned to the customer group.
	IBNTRTMT	0 to 63	IBN Treatment Number. This subfield specifies the treatment number to index to Table IBNTREAT. Enter a value from 0 to 63.
ITDATA		See subfield	IBN Treatment Data. This field contains subfields LOG and RTESEL.
	LOG	Y or N	Log. This subfield specifies if a printout of trunk or line message 138 is a requirement. The printout can be a requirement each time translations routes to a specific treatment. Enter Y or N.
	RTESEL	S, C, T, or TRMRT	Route Selector. This subfield specifies the route selector. Enter one of the following selectors and subfields: • Enter selector S and the code assigned in Table CLLI to route calls to a tone or announcement. • Enter selector C and the incoming call identifier (ICI) to route calls to a specified key and lamp on the attendant console. (ICI 8, or 26 to 254) • Enter selector T with TABID (OFRT or IBNRTE) and KEY (1 to 1023) to route calls with two or more route elements. • Enter selector TRMT and the four digit treatment identifier to route calls to Table TMTCNTL.

Datafill example for table IBNTREAT

Sample datafill for table IBNTREAT appear in the following example.

MAP example for table IBNTREAT

```
TABLE:  IBNTREAT

    IBNTKEY             ITDATA
_____________________________________________________

    MDCGRP1           2 N  S  MSBANN
    MDCGRP1           3 N  C  26
    MDCGRP1           4 N  T  OFRT 5
    MDCGRP1           5 N  TRMT  VACT
```

Tools for verifying translations

The MBS Make Set Busy feature does not use tools for verifying translations.

SERVORD

Use SERVORD to enter data in table KSETFEAT.

Table KSETFEAT (Business Set and Data-Unit Feature) lists the line features assigned to the business sets and data units (DU). The business sets and data units appear in table KSETLINE. This table also lists line features assigned to the Meridian digital telephone sets and DUs that appear in table IVDINV.

Use the Service Order System (SERVORD) command ADO (add option) to assign the MSB option. Use the DEO (delete option) command to remove option MSB. Option MSB allows an IBN station to appear busy to incoming calls. The system applies a momentary splash of ringing (500 ms) to the line. This ringing informs the station end user that the system diverted an incoming call because of option MSB. The line or DN appears busy to external and intragroup incoming calls.

The end user can specify the type of treatment that external incoming calls receive. If the end user does not specify a treatment, external calls receive busy tone as the default treatment. Intragroup calls receive busy tone when option MSB blocks these calls.

SERVORD limits

The MBS Make Set Busy feature does not have SERVORD limits.

MBS Make Set Busy (end)

SERVORD prompts

The SERVORD prompts that the system uses to assign the MBS Make Set Busy feature to a current line appear in the following table.

SERVORD prompts for MBS Make Set Busy

Prompt	Correct input	Explanation
DN_OR_LEN	7-digit DN or LEN	Specifies the 7-digit DN or LEN of the line you must change. Enter the DN or LEN.
OPTKEY	1 to 69	Indicates the key on an MBS that has an option assigned. Enter a value from 1 to 69.
OPTION	MSB	Indicates the name of the option. Enter MSB.

Note: The system enters data in table KSETFEAT when the MBS Make Set Busy feature is assigned through SERVORD.

SERVORD example for adding MBS Make Set Busy

You can use the ADO command to add MBS Make Set Busy to a current line. This procedure appears in the following SERVORD example.

SERVORD example for MBS Make Set Busy in prompt mode

```
SO:
> ADO
SONUMBER:   NOW 87  10  10  PM
>
DN_OR_LEN:
> 2 1 2 11
OPTKEY:
> 7
OPTION:
> MSB
OPTKEY:
> $
```

SERVORD example for MBS Make Set Busy in no-prompt mode

```
>ADO  $  2 1 2 11  7  MSB  $
```

MBS Malicious Call Hold

Ordering codes

Functional group ordering code: MDC00007

Functionality ordering code: not applicable

Release applicability

BCS14 and up

Prerequisites

To operate, MBS Malicious Call Hold has the following prerequisites:

- BAS Generic, BAS00003
- MDC Minimum, MDC00001

Description

MBS Malicious Call Hold (MCH) allows a Meridian business set (MBS) end user to hold a connection within the switching unit on a malicious call, enabling the call to be traced back to the originating party.

When both parties are terminated in the same switching unit, the entire connection is held up until the called party releases the call. If the originating party is from an incoming trunk, the connection is held up back to the incoming trunk.

> ***Note:*** The MCH feature is incompatible with call-originating integrated services digital network (ISDN) telephone sets. During calls from an ISDN phone set to a proprietary business set (PSET), electronic business service (EBS), or Meridian Business Set (MBS), when the user of the business set presses the MCH key, the ISDN set *does not remain held* by the MCH feature. When the business set tries to apply the MCH, an FTR138 log is generated, showing treatment as FNAL (FEATURE_NOT_ALLOWED).

Activation of MBS Malicious Call Hold causes a log to be generated and an alarm to sound at the switching center. The malicious call trace (MCT) subsystem generates log report MCT101 when a malicious call trace signal is received on an outgoing trunk.

MBS Malicious Call Hold (continued)

Operation

To operate the MBS Malicious Call Hold feature, the end user performs the following steps:

- While the malicious caller is on the line, the end user presses the MCH (Malicious Call Hold) key. The lamp next to the directory number (DN) in use flashes.
- The call is now held and cannot be terminated by the originating party.

  Note: The originating party receives no notification, audible or visible, that the MBS Malicious Call Hold feature has been activated.

- To reaccess the call, the end user presses the flashing DN key.
- To terminate the call, the end user presses the RLS (Release) key or replaces the handset.

Translations table flow

The MBS Malicious Call Hold translations table is described in the following paragraph.

Table KSETFEAT (Business Set and Data Unit Feature) lists the line features that are assigned to business sets and data units. Field FEATKEY subfield KEY identifies the specific key for the MBS Malicious Call Hold feature. Subfield FEAT and field FEATURE identify the MBS Malicious Call Hold feature. This feature assignment is made through SERVORD.

The MBS Malicious Call Hold translation process is shown in the flowchart that follows. The flowchart and data show the MBS Malicious Call Hold feature assignment through SERVORD and the specific information in Table KSETFEAT.

MBS Malicious Call Hold (continued)

Table flow for MBS Malicious Call Hold

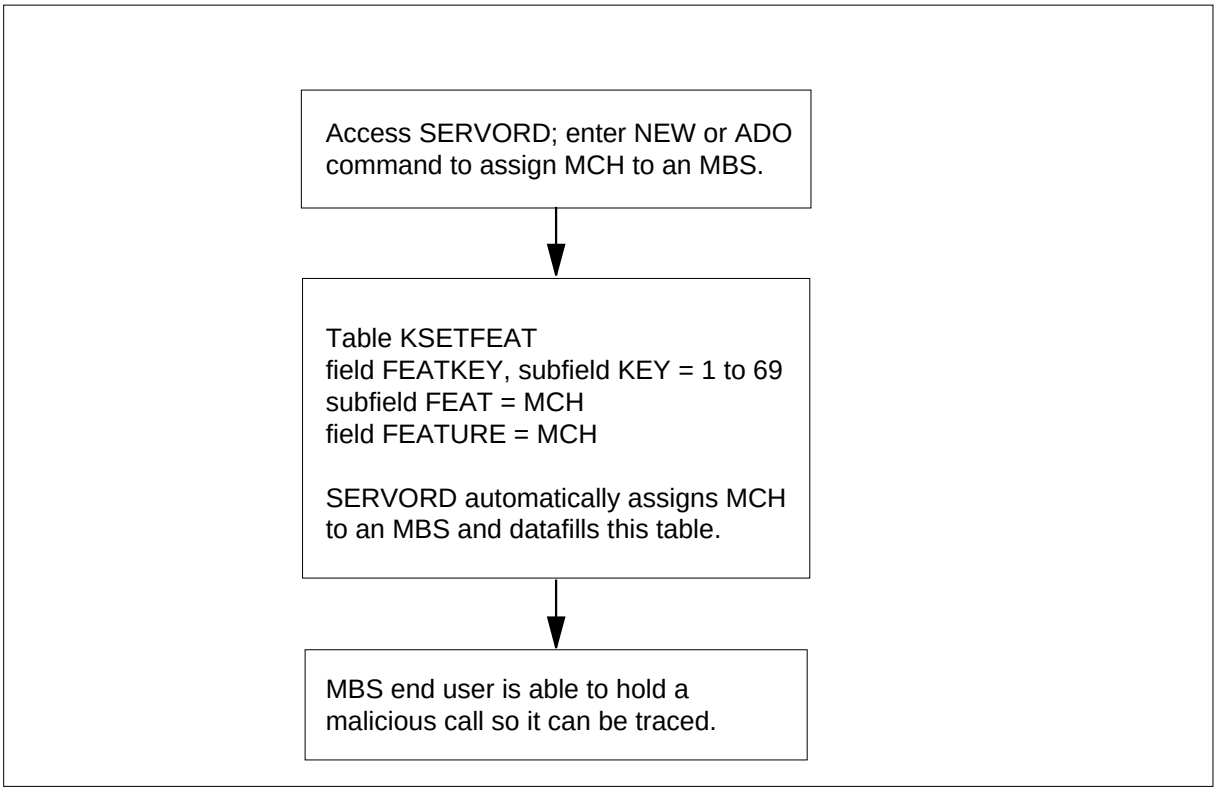

The following table lists the datafill content used in the flowchart.

Datafill example for MBS Malicious Call Hold

Datafill table	Example data
KSETFEAT	HOST 00 0 06 15 4 MCH MCH $

Limitations and restrictions

The following limitations and restrictions apply to MBS Malicious Call Hold:

- The MBS Malicious Call Hold feature is only applicable to two-party calls.
- Activation of the MBS Malicious Call Hold feature on a call is only allowed once the call has reached the talking state.
- The MBS Malicious Call Hold feature is incompatible with call-originating ISDN telephone sets.
- The MBS Malicious Call Hold feature functions as Malicious Call Trace in Australia.

MBS Malicious Call Hold (continued)

Interactions

The following paragraphs describe the interactions between MBS Malicious Call Hold and other functionalities.

Attendant Camp-on

Attendant camp-on is not compatible with MBS Malicious Call Hold.

Attendant Console

The MBS Malicious Call Hold feature disallows calls in which an attendant console is actively involved.

Barge-in

The attendant cannot barge in on a trunk involved in a call on which MBS Malicious Call Hold has been activated. Busy tone is applied to the attendant console in this case.

Busy Verify

The attendant cannot busy verify a line involved in a call on which the MBS Malicious Call Hold feature has been activated. Busy tone is applied to the attendant console in this case.

Call Park

The call park (PRK) feature cannot be activated on calls held by the MBS Malicious Call Hold feature.

Call Transfer

Call transfer (CXR) cannot be initiated from a call held by MBS Malicious Call Hold.

Call Waiting

The call waiting (CWT) feature is deactivated on calls held by the MBS Malicious Call Hold feature, and the calling party receives busy tone.

Conference Calling

Conference calling is not compatible with MBS Malicious Call Hold.

Executive Busy Override

Attempts by incoming calls to activate the executive busy override (EBO) feature on calls held by MBS Malicious Call Hold are blocked, and the calling party receives reorder tone.

Intercom Calls

The MBS Malicious Call Hold feature disallows intercom calls.

Operator Position

The MBS Malicious Call Hold feature disallows calls in which an operator position is actively involved.

Three-Way Calling

Three-way calling (3WC) cannot be initiated from a call held by MBS Malicious Call Hold.

Activation/deactivation by the end user

To operate the MBS Malicious Call Hold feature, the end user performs the following steps.

Activation/deactivation of MBS Malicious Call Hold by the end user

At your telephone:

1 While malicious caller is on line, press MCH key.

Response:

Lamp next to DN in use flashes. Call is now held and cannot be terminated by originator.

Note: The originating party receives no notification, audible or visible, that the MBS Malicious Call Hold feature has been activated.

2 To reaccess call, press flashing DN key.

Response:

End user is reconnected to malicious caller.

3 To terminate call, press RLS key or replace handset.

Response:

Call is terminated.

Billing

MBS Malicious Call Hold does not affect billing.

Station Message Detail Recording

MBS Malicious Call Hold does not affect Station Message Detail Recording.

Datafilling office parameters

MBS Malicious Call Hold does not affect office parameters.

MBS Malicious Call Hold (continued)

Datafill sequence

The following table lists the tables that require datafill to implement MBS Malicious Call Hold. The tables are listed in the order in which they are to be datafilled.

Datafill tables required for MBS Malicious Call Hold

Table	Purpose of table
KSETFEAT	Business Set and Data-Unit Feature Table. This table lists the line features that are assigned to the business sets and data units (DU) listed in table KSETLINE, and also the Meridian digital telephone sets and DUs listed in table IVDINV. ***Note:*** This table is datafilled through SERVORD; therefore, no datafill procedure or example is provided. Refer to “SERVORD" for an example of using SERVORD to datafill this table.

Translation verification tools

MBS Malicious Call Hold does not use translation verification tools.

SERVORD

SERVORD is used to datafill table KSETFEAT.

Table KSETFEAT (Business Set and Data-Unit Feature) lists the line features that are assigned to the business sets and data units (DU) listed in table KSETLINE, and also the Meridian digital telephone sets and DUs listed in table IVDINV.

Option MCH is assigned using the Service Order System (SERVORD) command ADO (add option) The DEO (delete option) command is used to remove option MCH. Option MCH allows an end user to hold a connection in theswitching unit on a malicious call. The call is then traced back to the originating party.

SERVORD limitations and restrictions

MBS Malicious Call Hold has no SERVORD limitations and restrictions.

MBS Malicious Call Hold (end)

SERVORD prompts

The following table shows the SERVORD prompts used to assign MBS Malicious Call Hold to an existing line.

SERVORD prompts for MBS Malicious Call Hold

Prompt	Valid input	Explanation
DN_OR_LEN	7- digit DN or LEN	Specifies the 7-digit DN or LEN of the line to be changed. Enter the DN or LEN.
OPTKEY	1 to 69	Indicates the key on an MBS to which an option is assigned. Enter a value from 1 to 69.
OPTION	MCH	Indicates the name of the option. Enter MCH.

Note: Table KSETFEAT is automatically datafilled when MBS Malicious Call Hold is assigned using SERVORD.

SERVORD example for adding MBS Malicious Call Hold

The following SERVORD example shows how MBS Malicious Call Hold is added to an existing line using the ADO command.

SERVORD example for MBS Malicious Call Hold in prompt mode

```
SO:
> ADO
SONUMBER:   NOW 87  10  10  PM
>
DN_OR_LEN:
> 2 1 2 11
OPTKEY:
> 5
OPTION:
> MCH
OPTKEY:
> $
```

SERVORD example for MBS Malicious Call Hold in no-prompt mode

```
>ADO  $  2 1 2 11  5  MCH  $
```

MBS Onhook Dialing

Ordering codes

Functional group ordering code: MDC00007

Functionality ordering code: not applicable

Release applicability

BCS14 and up

Prerequisites

To operate, MBS Onhook Dialing has the following prerequisites:

- BAS Generic, BAS00003
- MDC Minimum, MDC00001

Description

MBS Onhook Dialing allows the end user to originate calls without lifting the handset by pressing an idle directory number (DN) key and dialing the desired number. Call progression tones and ringback are heard through the Meridian business set (MBS) speaker. The end user can lift the handset at any time and establish a two-way connection. Feature keys such as Speed Calling, Automatic Dialing, and Ring Again can be used with MBS Onhook Dialing. The call can be terminated at any time by pressing the Release (RLS) key.

Note: MBS Onhook Dialing is not an optional feature; it is inherent in the MBS.

Operation

To operate MBS Onhook Dialing, the end user performs the following steps:

- Press an idle DN key. The associated lamp comes on.
- Dial the DN. Progression tones and the answering party are heard over the MBS speaker.
- To establish a two-way connection, lift the handset .
- To terminate the call, press the RLS key at any time.

Translations table flow

MBS Onhook Dialing does not affect translations table flow.

Limitations and restrictions

MBS Onhook Dialing has no limitations or restrictions.

Interactions

MBS Onhook Dialing has no functionality interactions.

Activation/deactivation by the end user

To operate MBS Onhook Dialing, the end user performs the following steps.

Activation/deactivation of MBS Onhook Dialing by the end user

At your telephone

1 Press an idle DN key.
Response:
Associated lamp comes on.

2 Dial DN.
Response:
Progression tones and answering party are heard over MBS speaker.

3 To establish two-way connection, lift handset.
Response:
Two-way connection is established.

4 To terminate call, press RLS key at any time.
Response:
Call is terminated.

Billing

MBS Onhook Dialing does not affect billing.

Station Message Detail Recording

MBS Onhook Dialing does not affect Station Message Detail Recording.

Datafilling office parameters

MBS Onhook Dialing does not affect office parameters.

Datafill sequence

MBS Onhook Dialing does not affect datafill.

Translation verification tools

MBS Onhook Dialing does not use translation verification tools.

SERVORD

MBS Onhook Dialing does not use SERVORD.

MBS Privacy Release (across Switch)

Ordering codes

Functional group ordering code: MDC00007

Functionality ordering code: not applicable

Release applicability

BCS14 and up

Prerequisites

To operate, MBS Privacy Release (across Switch) has the following prerequisites:

- BAS Generic, BAS00003
- MDC Minimum, MDC00001

Description

The MBS Privacy Release (across Switch) feature allows single call arrangement (SCA) multiple appearance directory numbers (MADN) to establish a conference call among up to 30 MADN lines and an outside number.

Operation

To activate the MBS Privacy Release (across Switch) feature, the end user performs the following steps:

- The originator presses the Privacy Release (PRL) key while the line is in a talking state. Lamps associated with all MADN members flash.

  Note: A PRL lamp is not required for this feature, so the feature can be assigned to key 9.

- Once MBS Privacy Release (across Switch) is active, any MADN member can join the conference by going off-hook or pressing the MADN key. Only one MADN line can be added at a time.
- When a MADN member joins the conference, the MADN lamps stop flashing until the PRL key is pressed again.
- When a MADN party or external party disconnects from the privacy release call, the disconnecting party is removed from the conference; the rest remain up until the next to the last party in the conference disconnects.
- To cancel MBS Privacy Release (across Switch), the originator presses the active MADN key before another member enters the call or holds the MADN call before a MADN member joins the conference.

MBS Privacy Release (across Switch) (continued)

Translations table flow

The MBS Privacy Release (across Switch) translations tables are described in the following list:

- Table KSETLINE (Business Set and Data Unit Line Assignment) defines the business set and data unit numbers supported by the switch and the hardware options assigned to each. This table is datafilled when the line is assigned in SERVORD or the SCA MADN feature is associated with an MBS.
- Table KSETFEAT (Business Set and Data Unit Feature) lists the line features assigned to business sets and data units. The PRL feature associated with SCA MADNs for the business set are assigned through SERVORD and are automatically datafilled in this table.
- Table IBNXLA (IBN Translation) provides the instructions that translate the digits for the privacy and MADN hold access codes. These access codes are required for 500/2500 set activation or deactivation or for business sets without the dedicated key

The MBS Privacy Release (across Switch) translation process is shown in the flowchart that follows. The flowchart and data show assignment of the MDN SCA option in SERVORD and the access codes assignment for privacy and MADN hold features.

MBS Privacy Release (across Switch) (continued)

Table flow for MBS Privacy Release (across Switch)

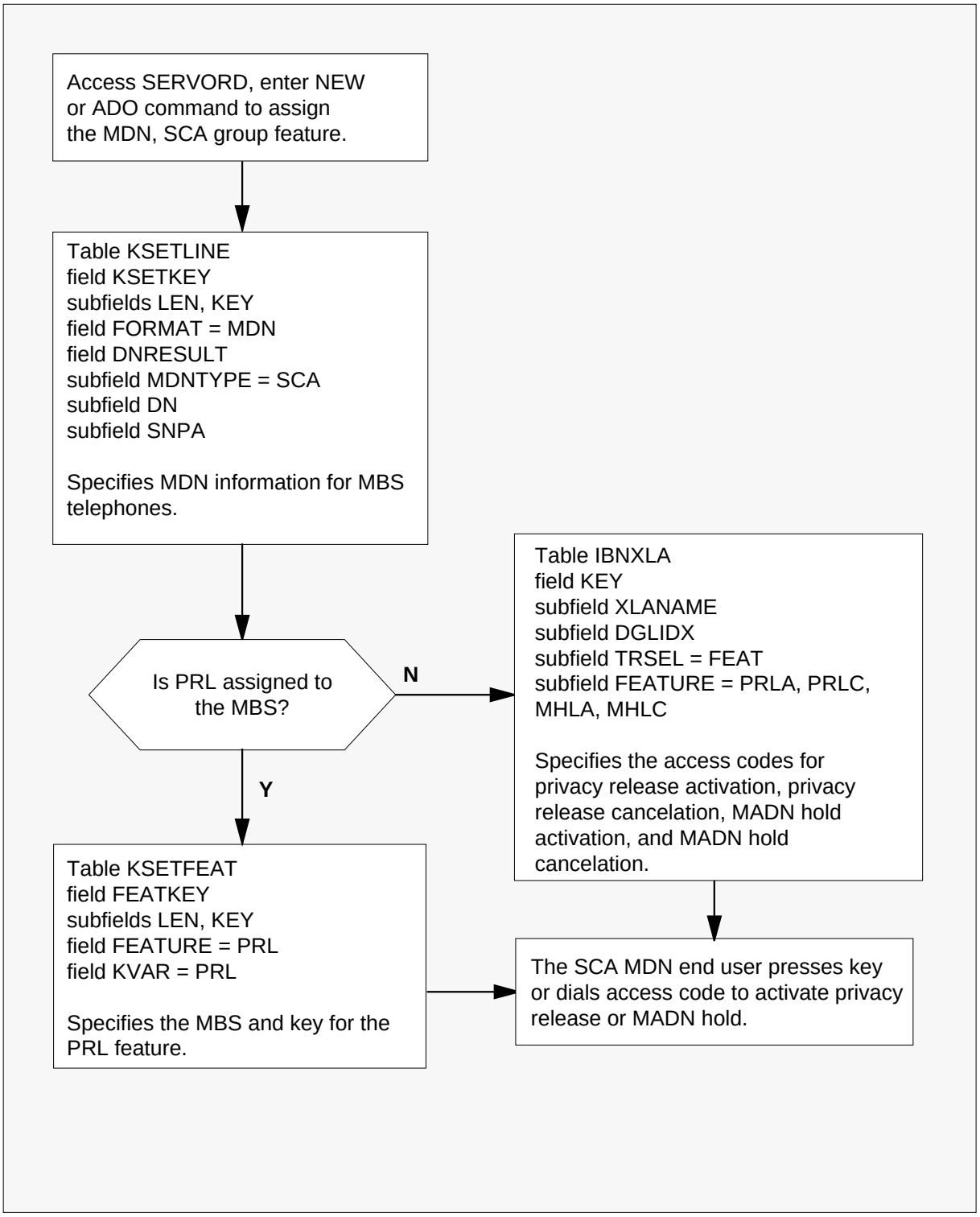

MBS Privacy Release (across Switch) (continued)

The following table lists the datafill content used in the flowchart.

Datafill example for MBS Privacy Release (across Switch)

Datafill table	Example data
KSETLINE	HOST 00 0 08 02 3 MDN SCA Y Y 5554396 MDCGRP1 0 0 919 $
KSETFEAT	HOST 00 0 08 02 3 PRL PRL
IBNXLA	MDCXLA1 84 FEAT N N N PRLA
	MDCXLA1 85 FEAT N N N PRLC
	MDCXLA1 87 FEAT N N N MHLA
	MDCXLA1 88 FEAT N N N MHLC

Limitations and restrictions

The following limitations and restrictions apply to MBS Privacy Release (across Switch):

- MBS Privacy Release (across Switch) can only be activated if the MADN line is in a talking state and no conference is in progress.
- MBS Privacy Release (across Switch) is not allowed if the external party is an attendant console or an operator.
- Once a MADN conference is established, no other conference feature is allowed.
- A maximum of 30 parties are permitted in a single MADN call.

Interactions

MBS Privacy Release (across Switch) has no functionality interactions.

Activation/deactivation by the end user

To activate the MBS Privacy Release (across Switch) feature, the end user performs the following steps.

MBS Privacy Release (across Switch) (continued)

Activaiton/deactivation of MBS Privacy Release (across Switch) vy the end user

At your telephone:

1. Originator presses PRL key while line is in a talking state.

   Response:

   Lamps associated with all MADN members flash.

2. Any MADN number goes off-hook or presses MADN key.

   Note: Only one MADN line can be added at a time.

   Response:

   MADN lamps stop flashing until PRL key is pressed again.

3. MADN party or external party disconnects from privacy release call.

   Response:

   Disconnecting party is removed from conference; rest remain up until next to last party in conference disconnects.

4. To cancel MBS Privacy Release (across Switch), originator presses active MADN key before another member enters call or holds MADN call before MADN member joins conference.

   Response:

   MBS Privacy Release (across Switch) is canceled.

Billing

MBS Privacy Release (across Switch) does not affect billing.

Station Message Detail Recording

MBS Privacy Release (across Switch) does not affect Station Message Detail Recording.

Datafilling office parameters

MBS Privacy Release (across Switch) does not affect office parameters.

Datafill sequence

There are two options for assigning the MBS Privacy Release (across Switch) feature: assign the feature to a dedicated key in Table KSETFEAT, or assign the feature to an access code in Table IBNXLA.

MBS Privacy Release (across Switch) (continued)

The following table lists the tables that require datafill to implement MBS Privacy Release (across Switch). The tables are listed in the order in which they are to be datafilled.

Datafill tables required for MBS Privacy Release (across Switch)

Table	Purpose of table
KSETLINE (Note)	Business Set And Data-Unit Line Assignment Table. This table contains the directory number appearances for business sets and data units.
KSETFEAT (Note)	Business Set and Data-Unit Feature Table. This table lists the line features that are assigned to the business sets and data units (DU) listed in table KSETLINE, and also the Meridian digital telephone sets and DUs listed in table IVDINV.
IBNXLA	IBN Translation. This table contains the data for the digit translation of calls from an IBN station, an attendant console (AC), or an incoming side of a two-way IBN trunk group.
Note: This table is datafilled through SERVORD; therefore, no datafill procedure or example is provided. Refer to “SERVORD" for an example of using SERVORD to datafill this table.	

Datafilling table IBNXLA

Table IBNXLA provides the instructions that translate the digits for the privacy and MADN hold access codes. Datafill Table IBNXLA to assign the appropriate access codes. There are four entries necessary for the MBS Privacy Release (across Switch) feature in Table IBNXLA: PRLA, PRLC, MHLA, and MHLC.

The following table shows the datafill specific to MBS Privacy Release (across Switch) for table IBNXLA with PRLA that is specific to this feature. Only those fields that apply directly to MBS Privacy Release (across Switch) are

MBS Privacy Release (across Switch) (continued)

shown. For a description of the other fields, refer to the data schema section of this document.

Datafilling table IBNXLA (privacy release activation)

Field	Subfield or refinement	Entry	Explanation and action
KEY		See subfield	Key. This field consists of subfields XLANAME and DGLIDX.
	XLANAME	1 to 8	Translator Name. This subfield specifies the name that is assigned to the translator. Enter the 1- to 8-character name.
	DGLIDX	1 to 18	Digilator Index. This subfield specifies the access code. Enter the 1- to 18-digit number assigned as the access code.
RESULT		See subfield	Result. This field consists of subfield TRSEL.
	TRSEL	FEAT	Translations Selector. This subfield specifies the translations selector to be used. Enter FEAT. ***Note:*** If TRSEL is set to FEAT, subfields ACR, SMDR, and FEATURE require datafill.
	ACR	Y or N	Account Code Entry. This subfield specifies whether an account code is required. Enter Y or N.
	SMDR	Y or N	Station Message Detail Recording. This subfield specifies whether SMDR is required. Enter Y or N.
	FEATURE	PRLA	Feature. This subfield specifies the feature assigned to a line. Enter PRLA.

The following table shows the datafill specific to MBS Privacy Release (across Switch) for table IBNXLA with PRLC that is specific to this feature. Only those fields that apply directly to MBS Privacy Release (across Switch) are

MBS Privacy Release (across Switch) (continued)

shown. For a description of the other fields, refer to the data schema section of this document.

Datafilling table IBNXLA (privacy release cancelation)

Field	Subfield or refinement	Entry	Explanation and action
KEY		See subfield	Key. This field consists of subfields XLANAME and DGLIDX.
	XLANAME	1 to 8	Translator Name. This subfield specifies the name that is assigned to the translator. Enter the 1- to 8-character name.
	DGLIDX	1 to 18	Digilator Index. This subfield specifies the access code. Enter the 1- to 18-digit number assigned as the access code.
RESULT		See subfield	Result. This field consists of subfield TRSEL.
	TRSEL	FEAT	Translations Selector. This subfield specifies the translations selector to be used. Enter FEAT. ***Note:*** If TRSEL is set to FEAT, subfields ACR, SMDR, and FEATURE require datafill.
	ACR	Y or N	Account Code Entry. This subfield specifies whether an account code is required. Enter Y or N.
	SMDR	Y or N	Station Message Detail Recording. This subfield specifies whether SMDR is required. Enter Y or N.
	FEATURE	PRLC	Feature. This subfield specifies the feature assigned to a line. Enter PRLC.

The following table shows the datafill specific to MBS Privacy Release (across Switch) for table IBNXLA with MHLA that is specific to this feature. Only those fields that apply directly to MBS Privacy Release (across Switch) are

MBS Privacy Release (across Switch) (continued)

shown. For a description of the other fields, refer to the data schema section of this document.

Datafilling table IBNXLA (MADN hold activation)

Field	Subfield or refinement	Entry	Explanation and action
KEY		See subfield	Key. This field consists of subfields XLANAME and DGLIDX.
	XLANAME	1 to 8	Translator Name. This subfield specifies the name that is assigned to the translator. Enter the 1- to 8-character name.
	DGLIDX	1 to 18	Digilator Index. This subfield specifies the access code. Enter the 1- to 18-digit number assigned as the access code.
RESULT		See subfield	Result. This field consists of subfield TRSEL.
	TRSEL	FEAT	Translations Selector. This subfield specifies the translations selector to be used. Enter FEAT. ***Note:*** If TRSEL is set to FEAT, subfields ACR, SMDR, and FEATURE require datafill.
	ACR	Y or N	Account Code Entry. This subfield specifies whether an account code is required. Enter Y or N.
	SMDR	Y or N	Station Message Detail Recording. This subfield specifies whether SMDR is required. Enter Y or N.
	FEATURE	MHLA	Feature. This subfield specifies the feature assigned to a line. Enter MHLA.

The following table shows the datafill specific to MBS Privacy Release (across Switch) for table IBNXLA with MHLC that is specific to this feature. Only those fields that apply directly to MBS Privacy Release (across Switch) are

MBS Privacy Release (across Switch) (continued)

shown. For a description of the other fields, refer to the data schema section of this document.

Datafilling table IBNXLA (privacy release cancelation)

Field	Subfield or refinement	Entry	Explanation and action
KEY		See subfield	Key. This field consists of subfields XLANAME and DGLIDX.
	XLANAME	1 to 8	Translator Name. This subfield specifies the name that is assigned to the translator. Enter the 1- to 8-character name.
	DGLIDX	1 to 18	Digilator Index. This subfield specifies the access code. Enter the 1- to 18-digit number assigned as the access code.
RESULT		See subfield	Result. This field consists of subfield TRSEL.
	TRSEL	FEAT	Translations Selector. This subfield specifies the translations selector to be used. Enter FEAT. ***Note:*** If TRSEL is set to FEAT, subfields ACR, SMDR, and FEATURE require datafill.
	ACR	Y or N	Account Code Entry. This subfield specifies whether an account code is required. Enter Y or N.
	SMDR	Y or N	Station Message Detail Recording. This subfield specifies whether SMDR is required. Enter Y or N.
	FEATURE	MHLC	Feature. This subfield specifies the feature assigned to a line. Enter MHLC.

Datafill example for table IBNXLA

The following example shows sample datafill for table IBNXLA.

MBS Privacy Release (across Switch) (continued)

MAP display example for table IBNXLA

```
 KEY                    RESULT

MDCXLA1  84             FEAT  N N N PRLA
MDCXLA1  85             FEAT  N N N PRLC
MDCXLA1  87             FEAT  N N N MHLA
MDCXLA1  88             FEAT  N N N MHLC
```

Translation verification tools

MBS Privacy Release (across Switch) does not use translation verification tools.

SERVORD

SERVORD is used to datafill tables KSETLINE and KSETFEAT.

Table KSETLINE (Business Set and Data Unit Line Assignment) contains the directory number appearances for business sets and data units.

Table KSETFEAT (Business Set and Data-Unit Feature) lists the line features that are assigned to the business sets and data units (DU) listed in table KSETLINE, and also the Meridian digital telephone sets and DUs listed in table IVDINV.

Option PRL is assigned using the Service Order System (SERVORD) command ADO (add option) The DEO (delete option) command is used to remove option PRL. Option PRL allows SCA MADN end users to establish a conference call between an outside number and up to 30 MADN lines.

SERVORD limitations and restrictions

MBS Privacy Release (across Switch) has no SERVORD limitations and restrictions.

MBS Privacy Release (across Switch) (end)

SERVORD prompts

The following table shows the SERVORD prompts used to assign MBS Privacy Release (across Switch) to a line.

SERVORD prompts for MBS Privacy Release (across Switch)

Prompt	Valid input	Explanation
DN_OR_LEN	7-digit DN or LEN	Specifies the 7-digit DN or LEN of the line to be changed. Enter the DN or LEN.
OPTKEY	1 to 69	Indicates the key on an MBS to which an option is assigned. Enter a value from 1 to 69.
OPTION	PRL	Indicates the name of the option. Enter PRL.

Note: Table KSETFEAT and Table KSETLINE are automatically datafilled when MBS Privacy Release (across Switch) is assigned using SERVORD.

SERVORD example for adding MBS Privacy Release (across Switch)

The following SERVORD example shows how MBS Privacy Release (across Switch) is added to an existing line using the ADO command.

SERVORD example for MBS Privacy Release (across Switch) in prompt mode

```
SO:
> ADO
SONUMBER:   NOW 87  10  10  AM
>
DN_OR_LEN:
> 2 1 2 11
OPTKEY:
> 7
OPTION:
> PRL
OPTKEY:
> $
```

SERVORD example for MBS Privacy Release (across Switch) in no-prompt mode

```
>ADO  $  2 1 2 11  7  PRL  $
```

MBS Query Time Key

Ordering codes

Functional group ordering code: MDC00007

Functionality ordering code: not applicable

Release applicability

BCS15 and up

Prerequisites

To operate, MBS Query Time Key has the following prerequisites:

- BAS Generic, BAS00003
- MDC Minimum, MDC00001

Description

MBS Query Time Key provides the current time and date to be displayed on an MBS with display. The time is displayed using the 24-hour clock, and the date is specified by year, month, and day.

Operation

The MBS Query Time Key feature is activated by pressing the query-time-and-date key. No associated lamp is required for this key. Upon pressing the query-time-and-date key, the time and date are displayed for a 12-s interval, or until another feature or action using the MBS with display is activated or occurs.

After the 12-s display interval, the display returns to its original state if the directory number (DN) key was active prior to pressing the query-time-and-date key; otherwise, the display is cleared.

The display is cleared if an incoming call appears on the primary directory number (PDN). If an incoming call appears on a secondary DN, the displayed time is not cleared until either the call is answered or the 12-s time-out interval expires.

Translations table flow

The MBS Query Time Key translation process is shown in the flowchart that follows.

MBS Query Time Key (continued)

Table flow for MBS Query Time Key

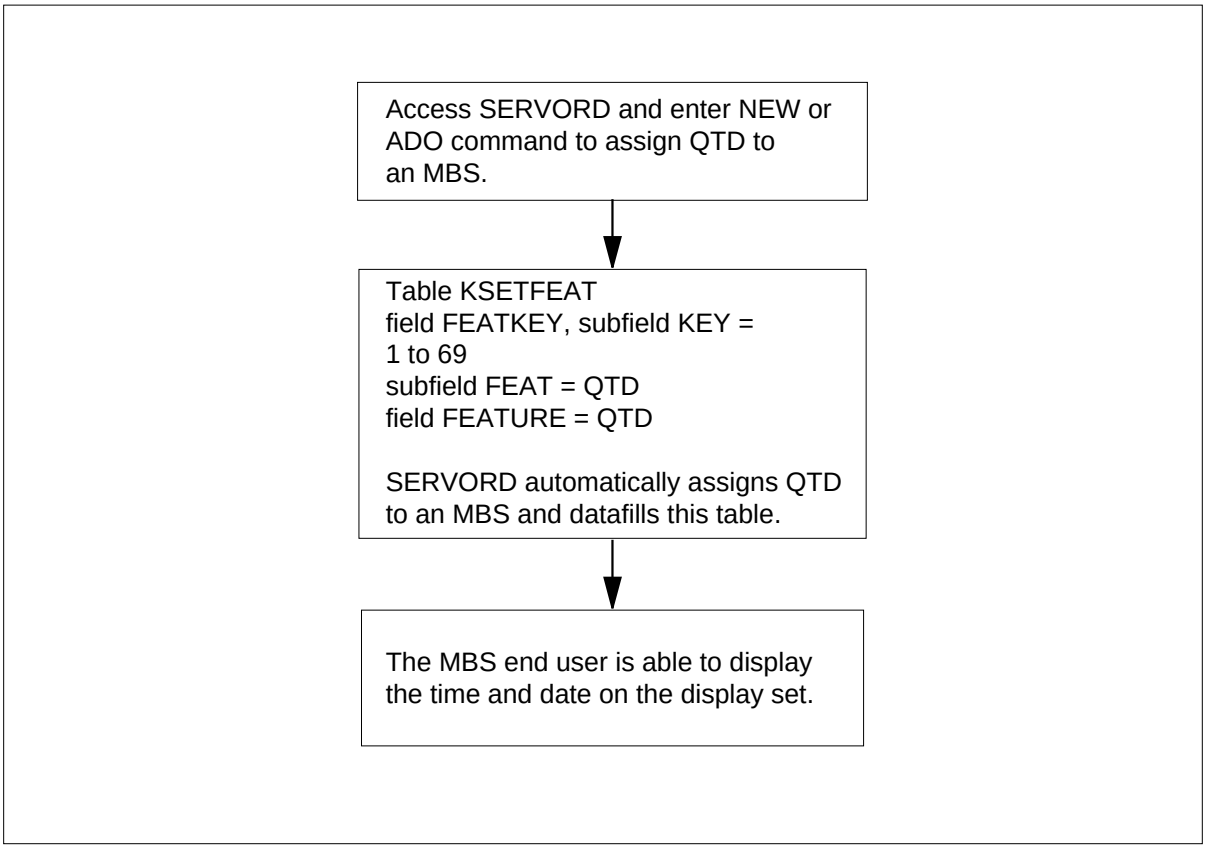

Table KSETFEAT

Table KSETFEAT (Business Set and Data Unit Feature)lists the line features assigned to business sets and data units. Field FEATKEY, subfield KEY identifies the specific key for the MBS Query Time Key feature. Subfield FEAT and field FEATURE identify option QTD. This feature assignment is made through SERVORD.

The following table lists the datafill content used in the flowchart.

Datafill example for MBS Query Time Key

Datafill table	Example data
KSETFEAT	HOST 00 0 06 15 4 QTD QTD $

MBS Query Time Key (continued)

Limitations and restrictions

The following limitations and restrictions apply to MBS Query Time Key:

- The display is cleared if an incoming call appears on the primary directory number (PDN). If an incoming call appears on a secondary directory number (SDN), the display does not clear until the call is answered or the 15-s time-out interval expires.
- All other features override the MBS Query Time Key feature.
- A query-time-and-date key press that occurs during digit collection or dialing phases for any feature is ignored.

Interactions

MBS Query Time Key has no functionality interactions.

Activation/deactivation by the end user

MBS Query Time Key requires no activation or deactivation by the end user.

Billing

MBS Query Time Key does not affect billing.

Station Message Detail Recording

MBS Query Time Key does not affect Station Message Detail Recording.

Datafilling office parameters

MBS Query Time Key does not affect office parameters.

Datafill sequence

The following table lists the tables that require datafill to implement MBS Query Time Key. The tables are listed in the order in which they are to be datafilled.

Datafill tables required for MBS Query Time Key

Table	Purpose of table
KSETFEAT (Note)	Business Set and Data-Unit Feature Table
Note: This table is datafilled through SERVORD; therefore, no datafill procedure is provided.	

Translation verification tools

MBS Query Time Key does not use translation verification tools.

SERVORD

Option QTD is assigned using the Service Order System (SERVORD) command ADO (add option) The DEO (delete option) command is used to remove option QTD. Option QTD allows the current time and date to be displayed by an MBS. When the query-time-and-date key is pressed, the current time and date are displayed for 12 s or until another action using the display is activated.

SERVORD limitations and restrictions

MBS Query Time Key has no SERVORD limitations and restrictions.

SERVORD prompts

The following table shows the SERVORD prompts used to assign MBS Query Time Key to an existing line.

SERVORD prompts for MBS Query Time Key

Prompt	Valid input	Explanation
DN_OR_LEN	7-digit DN or LEN	Specifies the 7-digit DN or LEN of the line to be changed. Enter the DN or LEN.
OPTKEY	1 to 69	Indicates the key on an MBS to which an option is assigned. Enter a value from 1 to 69.
OPTION	QTD	Indicates the name of the option. Enter QTD.
Note: Table KSETFEAT is automatically datafilled when MBS Query Time Key is assigned using SERVORD.		

SERVORD example for adding MBS Query Time Key

The following SERVORD example shows how MBS Query Time Key is added to an existing line using the ADO command.

MBS Query Time Key (end)

SERVORD example for MBS Query Time Key in prompt mode

```
SO:
> ADO
SONUMBER:   NOW 87 10 10 PM
>
DN_OR_LEN:
> 21211
OPTKEY:
> 5
OPTION:
> QTD
OPTKEY:
> $
```

SERVORD example for MBS Query Time Key in no-prompt mode

```
> ADO  $  21211  5  QTD  $
```

MBS Ring-Again Feature Key S/W

Ordering codes

Functional group ordering code: MDC00007

Functionality ordering code: not applicable

Release applicability

BCS14 and up

Prerequisites

To operate, MBS Ring-Again Feature Key S/W has the following prerequisites:

- BAS Generic, BAS00003
- MDC Minimum, MDC00001

Description

MBS Ring-Again Feature Key S/W allows a calling party encountering a busy station to be notified when the busy station becomes idle and to automatically dial the call.

Operation

The calling party dials a station and receives busy tone. To activate MBS Ring-Again Feature Key S/W, the calling party performs the following steps:

- The calling party presses the Ring Again (RAG) key. The lamp next to the RAG key lights, and the lamp next to the directory number (DN) goes off.
- While MBS Ring-Again Feature Key S/W is activated, the calling party can receive and originate other calls.
- When the busy called station becomes idle, the calling party receives notification tone, and the lamp next to the RAG key flashes.
- To complete the call, the calling party presses an idle DN key and then presses the RAG key and receives audible ringing.

If the calling party is on a call when the busy line becomes free, the ring again request remains pending, and notification is given when the calling party goes on-hook. Upon notification, the calling party has a predefined time to complete the call. If the call is not completed within the specified time, MBS Ring-Again Feature Key S/W is deactivated, and the calling party must redial if he or she wishes to complete the call.

MBS Ring-Again Feature Key S/W can be canceled at any time, except during notification, by pressing the RAG key again.

MBS Ring-Again Feature Key S/W (continued)

Translations table flow

The MBS Ring-Again Feature Key S/W translations process is shown in the flowchart in the following figure. The flowchart and data show the tables accessed when the RAG feature is added to the business set through SERVORD and the table accessed for the timers associated with RAG.

Table flow for MBS Ring-Again Feature Key S/W

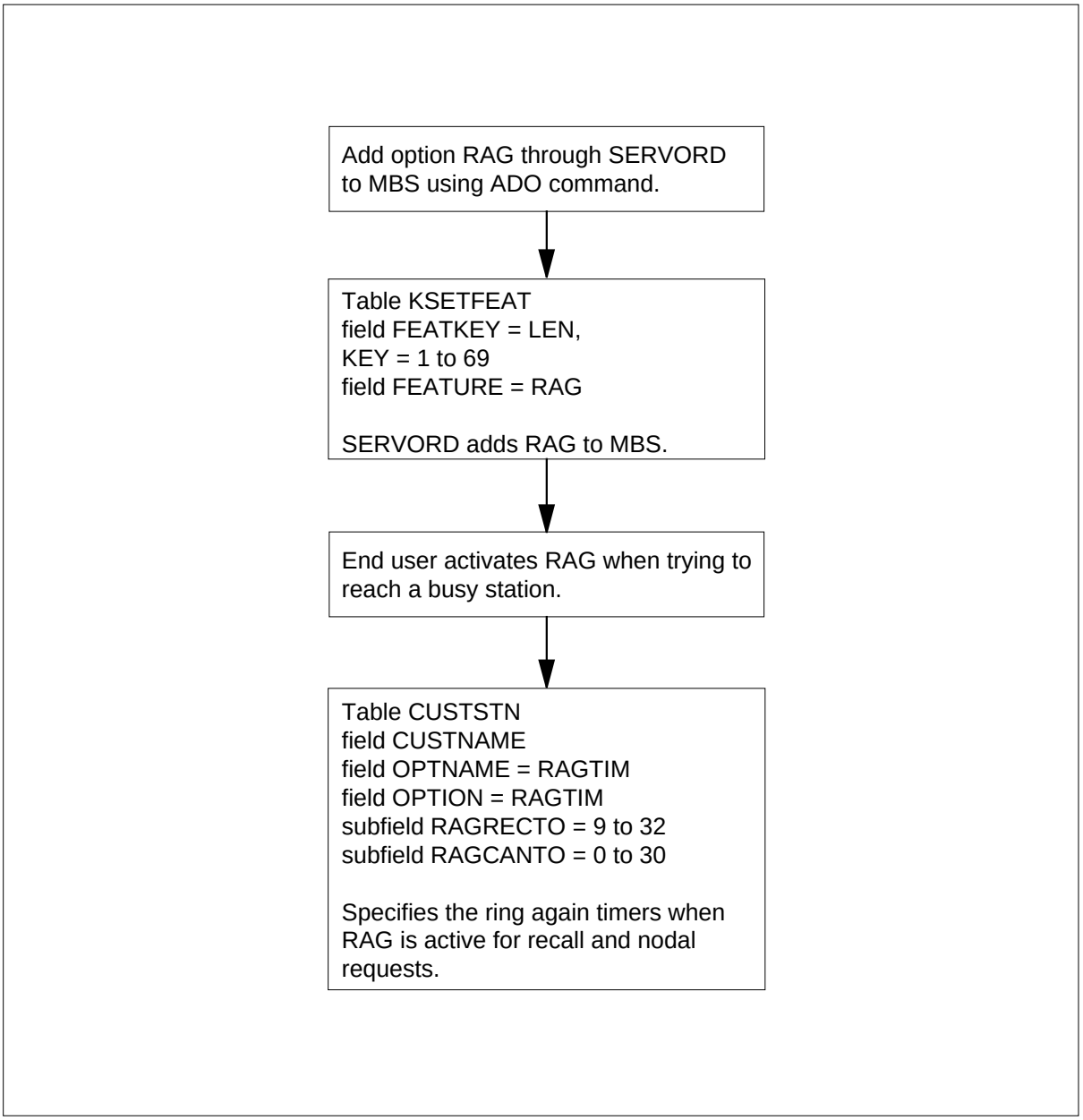

Table KSETFEAT

Table KSETFEAT (Business Set and Data Unit Feature) lists the line features assigned to business sets and data units. The RAG feature is assigned to a specific key (field FEATKEY, subfield KEY), and field KVAR, subfield KEYLIST specifies the DNs to be included when MSB is activated by the end user. The MSB feature and datafill for this table are assigned through SERVORD.

Table CUSTSTN

Table CUSTSTN (Customer Group Station Option) contains the station options assigned to each customer group. Option RAGTIM is required for customer groups with the RAG feature. Field OPTION, subfield RAGRECTO specifies the time in 1-s intervals that ring code 4 applies to alert a line with the RAG feature, the called party who was busy, is now idle. The default value of 8 s is stored internally in the DMS switch. Subfield RAGCANTO specifies the time in 1-min intervals that the nodal RAG request is to remain active.

The following table lists the datafill content used in the flowchart.

Datafill example for MBS Ring-Again Feature Key S/W

Datafill table	Example data
CUSTSTN	MDCGRP1 RAGTIM RAGTIM 10 15
KSETFEAT	HOST 02 0 00 13 5 RAG RAG $

Limitations and restrictions

The following limitations and restrictions apply to MBS Ring-Again Feature Key S/W:

- If the RAG key is not pressed very quickly after hearing the ring again notification tone, the called party can use his or her phone again, and the calling party receives busy tone.
- The calling party must press the RAG key within a specified time after being notified that the called station is available, or the lamp next to the RAG key goes off and the call is canceled.

Interactions

The following paragraphs describe the interactions between MBS Ring-Again Feature Key S/W and other functionalities.

MBS Ring-Again Feature Key S/W (continued)

The following features interact with MBS Ring-Again Feature Key S/W:

- Automatic or Manual Lines

  MBS Ring-Again Feature Key S/W cannot be assigned to automatic or manual lines. It cannot be assigned to lines denied originating or terminating service.

- Call Forwarding Universal, Call Forwarding Intragroup

  A ring again request is served even if the calling station has call forwarding universal (CFU) or call forwarding intragroup (CFI) activated. The calling station receives the ring again notification tone; it does not follow the call forwarding feature.

- Call Pickup

  Ring again recalls cannot be picked up by the call pickup (CPU) feature.

- Lines Denied Service

  MBS Ring-Again Feature Key S/W cannot be assigned to lines denied originating or terminating service.

Activation/deactivation by the end user

The calling party dials a station and receives busy tone. To activate the MBS Ring-Again Feature Key S/W feature, the calling party performs the following steps.

Activation/deactivation of MBS Ring-Again Feature Key S/W by the end user

At your telephone:

1 Calling party presses RAG key.

Response:

Lamp next to RAG key lights, and lamp next to DN goes off.

Note: While the MBS Ring-Again Feature Key S/W feature is activated, the calling party can receive and originate other calls.

2 Busy called station becomes idle.

Response:

Calling party receives notification tone, and lamp next to RAG key flashes.

3 Calling party presses an idle DN key and then presses RAG key.

Response:

Calling party receives audible ringing.

Billing

MBS Ring-Again Feature Key S/W does not affect billing.

Station Message Detail Recording

MBS Ring-Again Feature Key S/W does not affect Station Message Detail Recording.

Datafilling office parameters

MBS Ring-Again Feature Key S/W does not affect office parameters.

Datafill sequence

Note: The following table lists the tables that require datafill to implement MBS Ring-Again Feature Key S/W. The tables are listed in the order in which they are to be datafilled.

Datafill tables required for MBS Ring-Again Feature Key S/W

Table	Purpose of table
CUSTSTN	Customer Group Station Option Table
KSETFEAT (Note)	Business Set and Data-Unit Feature Table
Note: This table is datafilled through SERVORD; therefore, no datafill procedure is provided.	

Datafilling table CUSTSTN

Table CUSTSTN (Customer Group Station Option) contains the station options assigned to each customer group. Table CUSTSTN must be datafilled with the RAGTIM feature for those customer groups that have the ring again feature. The default of 8 s for this option is stored internally. However, unless this option is assigned, the option is not displayed in the table.

The following table shows the datafill specific to MBS Ring-Again Feature Key S/W for table CUSTSTN. Only those fields that apply directly to MBS

MBS Ring-Again Feature Key S/W (continued)

Ring-Again Feature Key S/W are shown. For a description of the other fields, refer to the data schema section of this document.

Datafilling table CUSTSTN

Field	Subfield or refinement	Entry	Explanation and action
OPTNAME		RAGTIM	Option Name. This field consist of the name of the option. Enter RAGTIM for the ring again timer feature.
OPTION		RAGTIM	Option. This field consist of subfields OPTION, RAGRECTO, and RAGANTO that pertain to this feature. Enter RAGTIM for the ring again timer feature.
	RAGRECTO	9 to 32	Ring Again Recall Timeout. This subfield specifies the time in 1-s intervals that ringing applies to alert the line that the called party who was busy is now idle. Enter a value from 9 to 32.
	RAGCANTO	0 to 30	Ring Again Recall Cancellation Timeout. This subfield specifies the time in 1-min intervals that the nodal ring again is to remain active. Enter a value from 0 to 30. ***Note:*** Enter 0 if time-out is not required.

Datafill example for table CUSTSTN

The following example shows sample datafill for table CUSTSTN.

MAP display example for table CUSTSTN

```
TABLE: CUSTSTN

 CUSTNAME   OPTNAME                                  OPTION
_____________________________________________________________
MDCGRP1     RAGTIM                           RAGTIM  10  15
```

Translation verification tools

MBS Ring-Again Feature Key S/W does not use translation verification tools.

SERVORD

Option RAG is assigned using the Service Order System (SERVORD) command ADO (add option) The DEO (delete option) command is used to

MBS Ring-Again Feature Key S/W (continued)

remove option RAG. Option RAG allows a station end user encountering a busy DN to be notified when the busy station becomes idle and the system automatically redials the same number.

SERVORD limitations and restrictions

MBS Ring-Again Feature Key S/W has no SERVORD limitations and restrictions.

SERVORD prompts

The following table shows the SERVORD prompts used to assign MBS Ring-Again Feature Key S/W to an existing line.

SERVORD prompts for MBS Ring-Again Feature Key S/W

Prompt	Valid input	Explanation
DN_OR_LEN	7-digit DN or LEN	Specifies the 7-digit DN or LEN of the line to be changed. Enter the DN or LEN.
OPTKEY	1 to 69	Indicates the key on an MBS to which an option is assigned. Enter a value from 1 to 69.
OPTION	RAG	Indicates the name of the option. Enter RAG.
Note: Table KSETFEAT is automatically datafilled when MBS Ring-Again Feature Key S/W is assigned using SERVORD.		

SERVORD example for adding MBS Ring-Again Feature Key S/W

The following SERVORD example shows how MBS Ring-Again Feature Key S/W is added to an existing line using the ADO command.

MBS Ring-Again Feature Key S/W (end)

SERVORD example for adding MBS Ring-Again Feature Key S/W in prompt mode

```
SO:
> ADO
SONUMBER     NOW 87 10 10 PM
>
DN_OR_LEN:
> 21211
OPTKEY:
> 7
OPTION:
> RAG
OPTKEY:
> $
```

SERVORD example for adding MBS Ring-Again Feature Key S/W in no-prompt mode

```
> ADO  $  2 1 2 11  7  RAG  $
```

MBS Speed Calling Feature Key S/W

Ordering codes

Functional group ordering code: MDC00007

Functionality ordering code: not applicable

Release applicability

BCS14 and up

Prerequisites

To operate, MBS Speed Calling Feature Key S/W has the following prerequisites:

- BAS Generic, BAS00003
- MDC Minimum, MDC00001

Description

MBS Speed Calling Feature Key S/W allows Meridian business set (MBS) end users to access three types of speed call lists (personal, group, and network) by pressing the Speed Call key or dialing an access code. Each stored directory number (DN) can have up to 24 digits.

The three types of speed call lists available are as follows:

- Personal—Each MBS has a unique speed call list, either short (up to 10 DNs stored against one-digit codes, 0-9) or long (up to 30, 50, or 70 DNs stored against two-digit codes, 00-29, 00-49, or 00-69). The end user assigns and changes DNs against these lists, and the lists cannot be accessed by other stations.
- Group—Many stations in a group have access to a common speed call list. Only one end user has control over assigning and changing the DNs in the common list. The group list can have up to 70 DNs accessed by two-digit codes.
- Network—The DNs stored against the network speed calling list are defined for the customer group and can only be changed from a MAP (maintenance and administration position) terminal. The network list can have up to 1000 DNs accessed by three-digit codes.

An MBS end user can have access to one one-digit coded list, one two-digit coded list, and one three-digit coded list. The MBS cannot have access to a two-digit personal list and a two-digit group list.

MBS Speed Calling Feature Key S/W (continued)

A separate feature key or access code must be provided for each speed calling list.

Operation

To program the short or long personal speed call list for the MBS, the end user performs the following steps:

- Without lifting the handset, press the Speed Call key. The associated lamp flashes.
- Dial the one- or two-digit code to be associated with the DN being stored.

  Note: For long lists, two digits must be dialed, even for codes 00-09.

- Dial the DN to be stored, then dial an octothorpe (#).
- Press the Speed Call key a second time. The associated lamp goes off, indicating that the DN has been stored successfully.
- To program more DNs or to change existing ones, repeat the procedure, remembering to use a different code for each DN stored.
- To delete a stored DN, dial the code followed by an octothorpe (#).

  Note: To program a speed call number, the MBS must either be inactive or have a call on hold.

To use the speed call lists, the end user performs the following steps:

- Press any idle DN key, and receive dial tone. The associated lamp comes on.
- Press the Speed Call key. The associated lamp comes on.
- Dial the speed call code for the DN to be dialed. The lamp associated with the Speed Call key goes off, and the DN is automatically dialed.

Translations table flow

The MBS Speed Calling Feature Key S/W translations process is shown in the flowchart in the following figure. The flowchart and data show the SCS, SCL, SCU feature assignment through SERVORD and the tables affected for programming speed call feature.

The MBS Speed Calling Feature Key S/W translations tables are described in the following list:

- Table KSETFEAT (Business Set and Data Unit Feature) lists the line features assigned to business sets and data units. The SCS, SCL, SCU features are assigned through SERVORD and are automatically datafilled

MBS Speed Calling Feature Key S/W (continued)

in this table. The SCL feature when assigned in SERVORD, requires a list of numbers that may be programmed by the end user. The field KVAR subfield LIST_TYPE in Table KSETFEAT shows a entry of L30, L50, or L70 for the SCL feature. For the SCU feature, field KVAR subfield CONTLEN (Contolling LEN), identifies the LEN (Line Equipment Number) of the programmer of the speed call list and subfield SCU_TDN (Speed Call User Toll Deny) specifies if toll deny is applied to speed call numbers. The SCS feature does not require any additional information.

- Table IBNXLA (IBN Translation) provides the instructions that translate the digits for the speed call programming access codes. These access codes are required for 500/2500 sets and for business sets without the dedicated key for speed calling.

There are two options for assigning MBS Speed Calling Feature Key S/W. Assign the feature to a dedicated key in Table KSETFEAT, or assign the feature to an access code in Table IBNXLA.

The MBS Speed Calling Feature Key S/W translation process is shown in the flowchart that follows.

MBS Speed Calling Feature Key S/W (continued)

Table flow for MBS Speed Calling Feature Key S/W

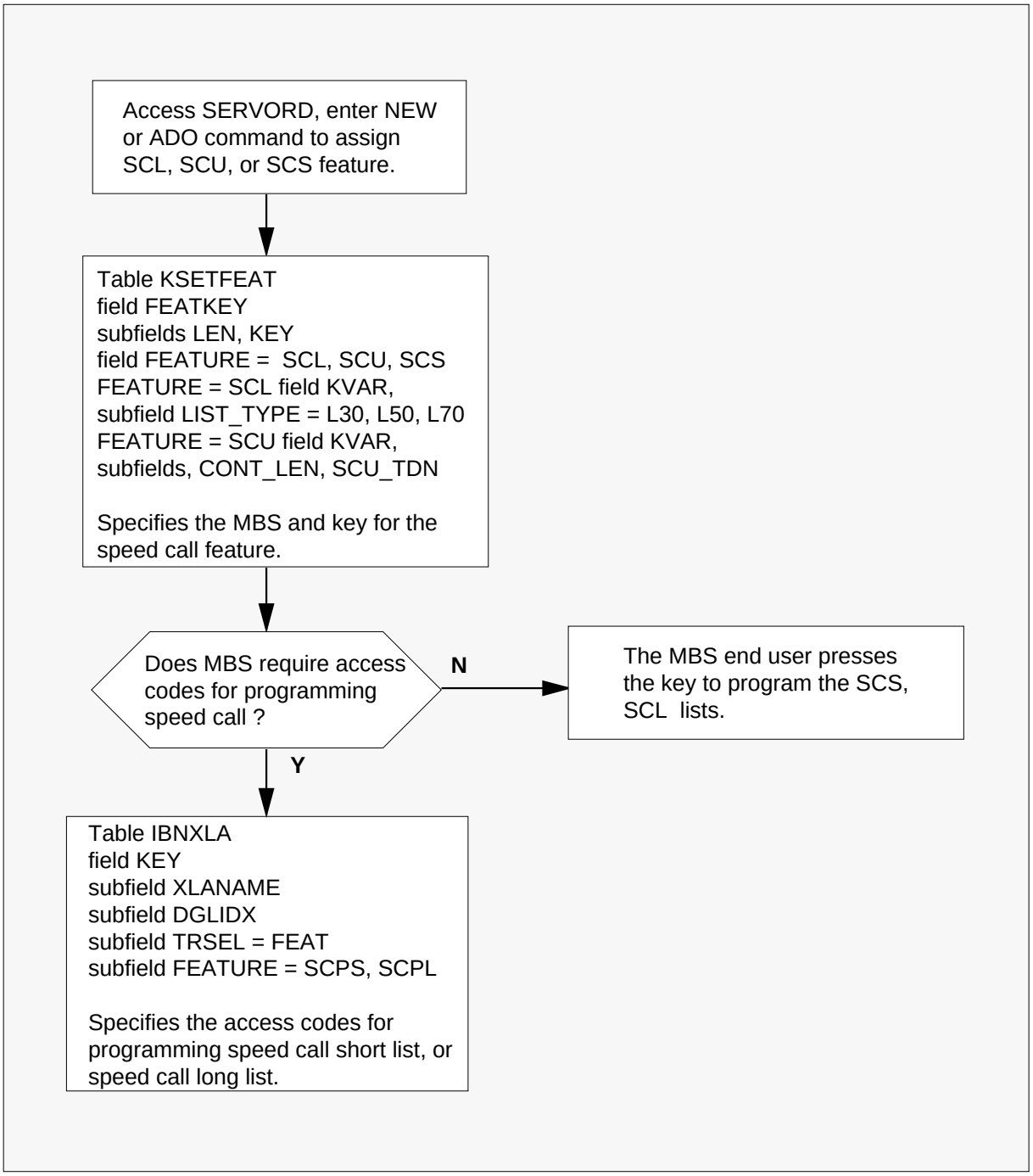

MBS Speed Calling Feature Key S/W (continued)

The following items show example data for MBS Speed Calling Feature Key S/W:

- MBS with speed call - list of 50 Host 01 0 02 04
- MBS with speed call user - Host 01 0 02 05
- Controlling LEN for SCU - Host 01 0 02 05
- MBS with speed call - short list Host 01 0 01 16
- Access code for SCPS - 140
- Access code for SCPL - 141.

The following table lists the datafill content used in the flowchart.

Datafill example for MBS Speed Calling Feature Key S/W

Datafill table	Example data
KSETFEAT	HOST 01 0 02 04 6 SCL SCL L50
	HOST 01 0 02 05 4 SCU SCU 01 0 02 04 N
	HOST 01 0 01 16 8 SCS SCS
IBNXLA	MDCXLA1 140 FEAT N N N SCPS
	MDCXLA1 141 FEAT N N N SCPL

Limitations and restrictions

The following limitations and restrictions apply to MBS Speed Calling Feature Key S/W:

- The speed call list cannot be updated while the line is busy on a call.
- The end user is not allowed to dial a partial DN and then use the Speed Call key to complete dialing.
- Feature activation can be accomplished by dial access.
- The end user cannot program or update the speed call list when he or she has been put on hold by another party.

Interactions

The following paragraphs describe the interactions between MBS Speed Calling Feature Key S/W and other functionalities.

MBS Speed Calling Feature Key S/W (continued)

The following features interact with MBS Speed Calling Feature Key S/W:

- Call Forwarding/Make Set Busy

  Speed calling is transparent to call forwarding (CFW) and make set busy (MSB).

- Cut-through Dialing

  The DMS-100 switch does not support cut-through dialing. Therefore, pause insertion is not needed. Asterisks (*) cannot be inserted in the speed call list to serve as timed pauses.

- Six-Port Conference, Three-Way Call, Call Transfer

  Speed calling can be used to establish a six-port conference call, to establish a three-way call, and to transfer a call.

- Call Hold

  It is possible to put a call on hold and update the speed call list.

Activation/deactivation by the end user

MBS Speed Calling Feature Key S/W requires no activation or deactivation by the end user.

Billing

MBS Speed Calling Feature Key S/W does not affect billing.

Station Message Detail Recording

MBS Speed Calling Feature Key S/W does not affect Station Message Detail Recording.

Datafilling office parameters

MBS Speed Calling Feature Key S/W does not affect office parameters.

MBS Speed Calling Feature Key S/W (continued)

Datafill sequence

The following table lists the tables that require datafill to implement MBS Speed Calling Feature Key S/W. The tables are listed in the order in which they are to be datafilled.

Datafill tables required for MBS Speed Calling Feature Key S/W

Table	Purpose of table
IBNXLA	IBN Translation Table
KSETFEAT (Note)	Business Set and Data-Unit Feature Table
Note: This table is datafilled through SERVORD; therefore, no datafill procedure is provided.	

Datafilling table IBNXLA

Table IBNXLA provides the instructions that translate the digits for the speed call programming short and speed call programming long activation codes. Table IBNXLA must be datafilled to assign the codes necessary to add a number to the speed call list and to delete a number from the speed call list.

The following table shows the datafill specific to MBS Speed Calling Feature Key S/W for table IBNXLA (SCPS). Only those fields that apply directly to MBS Speed Calling Feature Key S/W are shown. For a description of the other fields, refer to the data schema section of this document.

Datafilling table IBNXLA (SCPS) (Sheet 1 of 2)

Field2	Subfield or refinement	Entry	Explanation and action
KEY		see subfields	Key. This field consists of subfields XLANAME and DGLIDX.
	XLANA ME	translator name	Translator Name. This subfield specifies the name that is assigned to the translator. Enter the 1- to 8-character name.

MBS Speed Calling Feature Key S/W (continued)

Datafilling table IBNXLA (SCPS) (Sheet 2 of 2)

Field2	Subfield or refinement	Entry	Explanation and action
	DGLIDX	digital	Digilator Index. This subfield specifies the access code. Enter the 1- to 18-digit number assigned as the access code.
RESULT		see subfield	Result. This field consists of subfield TRSEL.
	TRSEL	FEAT	Translations Selector. This subfield specifies the translations selector to be used. Enter FEAT.
If TRSEL is set to FEAT, subfields ACR, SMDR, VCDR, and FEATURE require datafill.			
	ACR	Y or N	Account Code Entry. This subfield specifies whether an account code is required. Enter Y or N.
	SMDR	Y or N	Station Message Detail Recording. This subfield specifies whether SMDR is required. Enter Y or N.
	FEATURE	SCPS	Feature. This subfield specifies the feature assigned to a line. Enter SCPS.

The following table shows the datafill specific to MBS Speed Calling Feature Key S/W for table IBNXLA(SCPL). Only those fields that apply directly to

MBS Speed Calling Feature Key S/W (continued)

MBS Speed Calling Feature Key S/W are shown. For a description of the other fields, refer to the data schema section of this document.

Datafilling table IBNXLA (SCPL)

Field	Subfield or refinement	Entry	Explanation and action
KEY		see subfields	Key. This field consists of subfields XLANAME and DGLIDX.
	XLANA ME	translator name	Translator Name. This subfield specifies the name that is assigned to the translator. Enter the 1- to 8-character name.
	DGLIDX	digital	Digilator Index. This subfield specifies the access code. Enter the 1- to 18-digit number assigned as the access code.
RESULT		see subfield	Result. This field consists of subfield TRSEL.
	TRSEL	FEAT	Translations Selector. This subfield specifies the translations selector to be used. Enter FEAT.
If TRSEL is set to FEAT, subfields ACR, SMDR, and FEATURE require datafill.			
	ACR	Y or N	Account Code Entry. This subfield specifies whether an account code is required. Enter Y or N.
	SMDR	Y or N	Station Message Detail Recording. This subfield specifies whether SMDR is required. Enter Y or N.
	FEATURE	SCPL	Feature. This subfield specifies the feature assigned to a line. Enter SCPL.

Datafill example for table IBNXLA

The following example shows sample datafill for table IBNXLA with SCPS and SCPL.

MBS Speed Calling Feature Key S/W (continued)

MAP display example for table IBNXLA with SCPS and SCPL

```
 TABLE: IBNXLA

KEY                                                RESULT
_____________________________________________________________
MDCXLA1       140                        FEAT N  N  N SCPS
MDCXLA1       141                        FEAT N  N  N SCPL
```

Translation verification tools

MBS Speed Calling Feature Key S/W does not use translation verification tools.

SERVORD

The Service Order (SERVORD) system is used to add SCL, SCU, and SCS to a line.

SERVORD limitations and restrictions

MBS Speed Calling Feature Key S/W has no SERVORD limitations and restrictions.

MBS Speed Calling Feature Key S/W (continued)

SERVORD prompts

The following table shows the SERVORD prompts used to assign MBS Speed Calling Feature Key S/W to a line.

SERVORD prompts for MBS Speed Calling Feature Key S/W (Sheet 1 of 2)

Prompt	Valid input	Explanation
OPTION If OPTION is set to SCL, prompt LISTTYPE is presented.	SCL,SCU,SCS	Specifies the option to be assigned to the line. Enter SCL (speed calling long), SCU (speed calling user), or SCS (speed calling short).
LISTYPE If OPTION is set to SCU, prompts CONTLEN and SCU_TDN are presented.	L30, L50, or L70	Specifies the length of the list. Enter L30, L50, or L70.
Note: Table KSETFEAT is automatically datafilled when MBS Speed Calling Feature Key S/W is assigned using SERVORD.		

MBS Speed Calling Feature Key S/W (continued)

SERVORD prompts for MBS Speed Calling Feature Key S/W (Sheet 2 of 2)

Prompt	Valid input	Explanation
CONTLEN	LEN	Defines the controller's LEN that must point to a line having the SCL option. Enter an LEN.
SCU_TDN	Y,N	Specifies whether toll denial is applied to speed called numbers. Enter Y or N.
Note: Table KSETFEAT is automatically datafilled when MBS Speed Calling Feature Key S/W is assigned using SERVORD.		

SERVORD example for adding MBS Speed Calling Feature Key S/W

The following SERVORD example shows how MBS Speed Calling Feature Key S/W, using SCL is added to a line using the ADO command.

SERVORD example for MBS Speed Calling Feature Key S/W, using SCL in prompt mode

```
>ADO
SONUMBER:     NOW  92  5 12 PM
>
DN_OR_LEN:
> 00121
OPTION:
> SCL
LISTTYPE
> L50
OPTION:
> $
```

MBS Speed Calling Feature Key S/W (continued)

SERVORD example for MBS Speed Calling Feature Key S/W , using SCL in no-prompt mode

```
>ADO $ 0 0 1 21 SCL L50 $
```

The following SERVORD example shows how MBS Speed Calling Feature Key S/W, using SCU is added to a line using the ADO command.

SERVORD example for MBS Speed Calling Feature Key S/WMBS Speed Calling Feature Key S/W, using SCU in prompt mode

```
>ADO
SONUMBER:     NOW  92  5 12 PM
>
DN_OR_LEN:
> 00815
OPTKEY:
> 2
OPTION:
> SCU
CONTLEN:
> 00121
SCU_TDN:
> Y
OPTKEY:
> $
```

SERVORD example for MBS Speed Calling Feature Key S/WMBS Speed Calling Feature Key S/W, using SCU in no-prompt mode

```
> ADO $ 0 0 8 15 2 SCU 0 0 1 21 Y $
```

The following SERVORD example shows how MBS Speed Calling Feature Key S/WMBS Speed Calling Feature Key S/W, using SCS is added to a line using the ADO command.

MBS Speed Calling Feature Key S/W (end)

SERVORD example for MBS Speed Calling Feature Key S/WMBS Speed Calling Feature Key S/W, using SCS in prompt mode

```
>ADO
SONUMBER:     NOW  92  5 12 PM
>
DN_OR_LEN:
> 00815
OPTKEY:
> 2
OPTION:
> SCS
OPTKEY:
> $
```

SERVORD example for MBS Speed Calling Feature Key S/WMBS Speed Calling Feature Key S/W, using SCS in no-prompt mode

```
> ADO $ 0 0 8 15 2 SCS $
```

MBS Three-Way Calling Transfer

Ordering codes

Functional group ordering code: MDC00007

Functionality ordering code: not applicable

Release applicability

BCS14 and up

Prerequisites

To operate, MBS Three-Way Calling Transfer has the following prerequisites:

- BAS Generic, BAS00003
- MDC Minimum, MDC00001

Description

MBS Three-Way Calling Transfer allows a caller to include a third party in a call and then optionally transfer the call to the third party. Call transfer is accomplished using the Three-Way Calling (3WC) key.

Operation

Once active on a directory number (DN), the Meridian business set (MBS) end user performs the following steps to transfer a call to another station:

- The end user presses the 3WC key, and the 3WC lamp goes on. The DN key flashes, indicating that the call is placed on hold. The end user receives special dial tone.
- The end user dials the station to which the call is to be transferred. Upon hearing audible ring back, the end user has three options for proceeding:
  - The end user can wait for the called party to answer, speak privately, and then press the 3WC key again to establish a three-way conference.
  - The end user can transfer the call by pressing either the Release (RLS) key or the 3WC key again and then going on-hook.
  - The end user can flip-flop between the two parties by alternately pressing the DN key of the original party and the 3WC key once the third party has answered.

Translations table flow

The MBS Three-Way Calling Transfer translations tables are described in the following list:

MBS Three-Way Calling Transfer (continued)

Table KSETFEAT lists the line features that are assigned to business sets and data units. Field FEATKEY subfield KEY identifies the specific key for the MBS Three-Way Calling Transfer feature. Subfield FEAT and field FEATURE identify the MBS Three-Way Calling Transfer feature. This feature assignment is made through SERVORD.

The MBS Three-Way Calling Transfer translation process is shown in the flowchart that follows.

Table flow for MBS Three-Way Calling Transfer

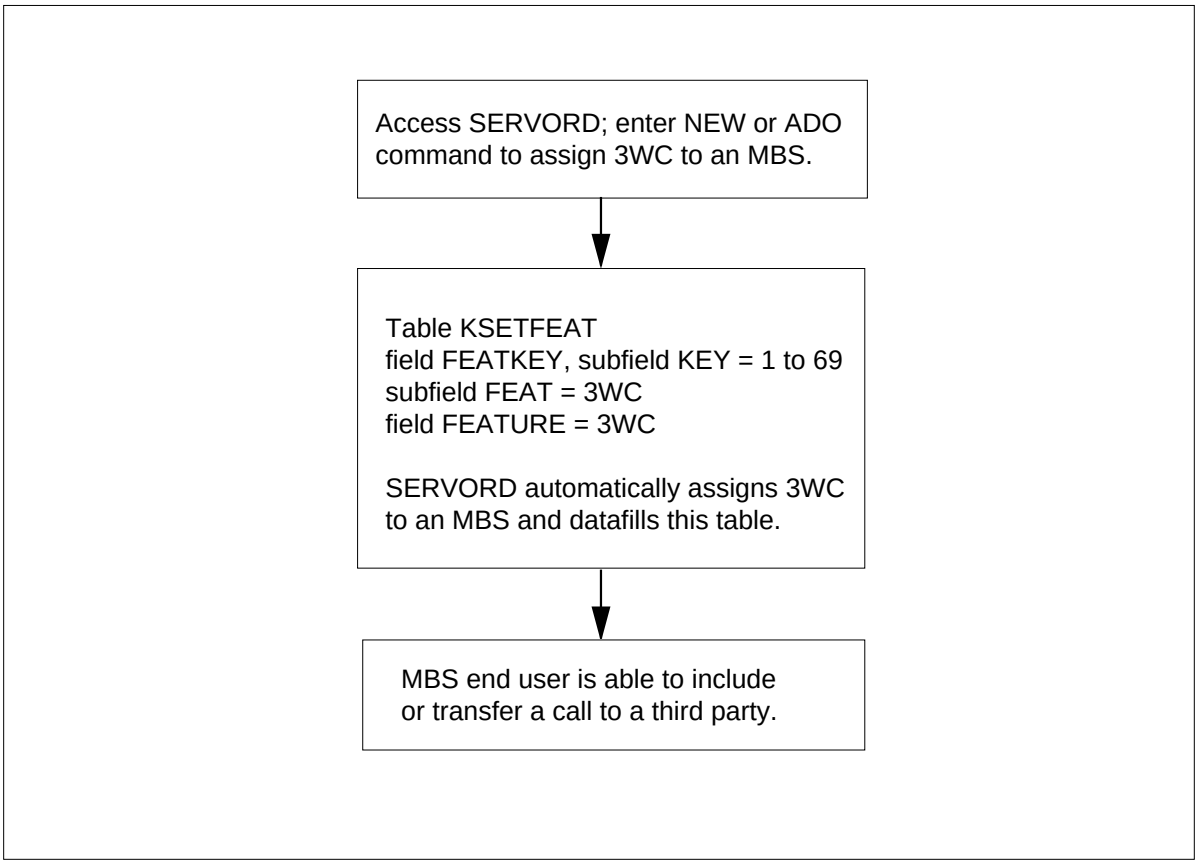

The following table lists the datafill content used in the flowchart. In the example, the LEN and key for 3WC is HOST 00 0 06 15 4.

Datafill example for MBS Three-Way Calling Transfer

Datafill table	Example data
KSETFEAT	HOST 00 0 06 15 4 3WC 3WC $

MBS Three-Way Calling Transfer (continued)

Limitations and restrictions

If an inactive DN key is pressed at any time, any currently active DN is put on hold. This can include the conference. When the conference is on hold, the second and third parties can still converse.

Interactions

The following paragraphs describe the interactions between MBS Three-Way Calling Transfer and other functionalities.

- *Authorization Codes or Account Codes* The end user can enter authorization codes or account codes on the second leg of the call.
- *Busy Override* If the end user encounters a busy signal on the second leg of a three-way call, the busy override feature cannot be activated.
- *Conferencing* The end user cannot originate on a 3WC key while a conference is active on another DN in the consult state. The end user cannot use the six-port conference feature when a three-way call is active on a DN.
- *Private Business Lines* Private business lines can be used for the first leg of a three-way call.
- *Ring Again* If the end user encounters a busy signal on the second leg of a three-way call, the ring again (RAG) feature can be activated. However, the RAG feature cannot be used to retrieve the call. The end user can then originate another call with the 3WC key.
- *Station Camp On for Meridian Business Set* For BCS31 and up, the station camp on for Meridian business set feature (NC0080) is available. This feature allows an end user to transfer a call to a busy station. The call returns to the end user if the busy party does not answer within a certain time frame.
- *Three-Way Call/Call Pickup Interaction* For BCS31 and up, the three-way call/call pickup interaction feature (AF2100) is available. This feature allows an end user involved in a call to activate call pickup on another call and, if desired, conference all three parties together.

Activation/deactivation by the end user

Once active on a directory number (DN), the Meridian business set (MBS) end user performs the following steps to transfer a call to another station.

MBS Three-Way Calling Transfer (continued)

Activation/deactivation of MBS Three-Way Calling Transfer by the end user

At your telephone

1 Press 3WC key.

Response:

3WC lamp goes on. DN key flashes, indicating that the call is placed on hold. End user receives special dial tone.

2 Dial station to which call is to be transferred.

Response:

End user hears audible ringback.

3 Wait for called party to answer, speak privately, and then press 3WC key again.

or

Press either RLS key or 3WC key again and then go on-hook.

or

Flip-flop between two parties by alternately pressing DN key of original party and 3WC key once third party has answered.

Response:

Three-way conference is established.

Call is transferred.

End user is alternately connected to the two parties.

Billing

MBS Three-Way Calling Transfer does not affect billing.

Station Message Detail Recording

MBS Three-Way Calling Transfer does not affect Station Message Detail Recording.

Datafilling office parameters

MBS Three-Way Calling Transfer does not affect office parameters.

Datafill sequence

The following table lists the table that requires datafill to implement MBS Three-Way Calling Transfer.

Datafill table required for MBS Three-Way Calling Transfer

Table	Purpose of table
KSETFEAT	Business Set and Data Unit Feature
Note: This table is datafilled through SERVORD; therefore, no datafill procedure is provided.	

Translation verification tools

MBS Three-Way Calling Transfer does not use translation verification tools.

SERVORD

Option 3WC is assigned using the Service Order System (SERVORD) command ADO (add option) The DEO (delete option) command is used to remove option 3WC. Option 3WC enables the end user on the assigned line to place an existing call on hold and to set up an inquiry call to another end user. The end user initiating the 3WC can switch speech paths between the held party and the talking party, connect all parties into a 3-port conference, and remove the conference and reconnect to a single party.

SERVORD limitations and restrictions

MBS Three-Way Calling Transfer has no SERVORD limitations and restrictions.

SERVORD prompts

The following table shows the SERVORD prompts used to assign MBS Three-Way Calling Transfer to an existing line.

SERVORD prompts for MBS Three-Way Calling Transfer

Prompt	Valid input	Explanation
DN_OR_LEN	7-digit DN or LEN	Specifies the 7-digit DN or LEN of the line to be changed. Enter the DN or LEN.
OPTKEY	1 to 69	Indicates the key on an MBS to which an option is assigned. Enter a value from 1 to 69.
OPTION	3WC	Indicates the name of the option. Enter 3WC.
Note: Table KSETFEAT is automatically datafilled when MBS Three-Way Calling Transfer is assigned using SERVORD.		

MBS Three-Way Calling Transfer (end)

SERVORD example for adding MBS Three-Way Calling Transfer

The following SERVORD example shows how MBS Three-Way Calling Transfer is added to an existing line using the ADO command.

SERVORD example for MBS Three-Way Calling Transfer in prompt mode

```
>ADO
SONUMBER:    NOW 87 10 10 PM
>
DN_OR_LEN:
>2 1 2 11
OPTKEY:
>7
OPTION:
>3WC
OPTKEY:
>$
```

SERVORD example for MBS Three-Way Calling Transfer in no-prompt mode

```
>ADO  $  2 1 2 11  7  3WC  $
```

MDC Circuit Test Enhancement

Ordering codes

Functional group ordering code: MDC00007

Functionality ordering code: NTX106AA

Release applicability

BCS26 and up

Prerequisites

To operate, MDC Circuit Test Enhancement has the following prerequisites:

- BAS Generic, BAS00003
- MDC Minimum, MDC00001

Description

The MDC Circuit Test Enhancement feature provides improvements in the circuit tests for MDC equipment, thus improving maintainability. This MDC equipment, referred to as keysets in this feature description, includes Meridian business sets (MBS), data units (DATA), asynchronous interface modules (AIM), and integrated bit error rate test (IBERT) lines. The enhanced circuit test capabilities permit better evaluation of the loop (for AIM and IBERT lines) and the operational status of the terminal on the loop (for MBS and DATA lines).

Operation

The CKTTST (circuit test) command, which in previous releases is only valid on MBS lines, is at the line test position manual (LTPMAN) level of the MAP (maintenance and administration position). Executing the CKTTST command causes the line concentrating module (LCM) to send a specified number of test messages to the end user terminal. The messages received at the LCM from the end user terminal are compared to those sent to the end user terminal. If the messages could not be sent, were not received, or did not match, a failure status is returned and displayed at the LTPMAN level of the MAP.

The diagnostic contains two tests, loop signaling at terminal and loop signaling at line card, which execute the CKTTST command functions. The loop-signaling-at-terminal test is only run on MBS and DATA lines. (AIM and IBERT lines do not have terminals.)

MDC Circuit Test Enhancement (continued)

Enhancements

Several enhancements that improve the capability of circuit testing are added by the MDC Circuit Test Enhancement feature. These enhancements, each discussed in more detail in a separate section, are listed below:

- An office parameter, CIRCUIT_TEST_NUMBER_MESSAGES, keeps track of the number of messages for circuit tests.
- Two failure flags indicate circuit test failures. One flag indicates failures on keyset lines at the line card, and the other flag indicates failures on MBS and DATA lines at the terminal.
- Two office parameters, LSETALARM and LCARDALARM, specify the alarm thresholds.
- The CKTTST command at the LTPMAN level of the MAP is enhanced to run on DATA, AIM, and IBERT lines as well as MBS lines. The CKTTST command only runs at the line card for AIM and IBERT lines. On MBS and DATA lines, the CKTTST command can run at either the line card or the terminal.
- A circuit test (CKTTST) level, added to the automatic line testing (ALT) level of the MAP, allows automatic circuit testing.
- The circuit test functionality is added to the station ringer test (SRT) for MBS and DATA lines.

CIRCUIT_TEST_NUMBER_MESSAGES office parameter

The CIRCUIT_TEST_NUMBER_MESSAGES office parameter in Table OFCVAR (Variable Office) specifies the number of messages for several tests. Up to 50 messages can be specified. The parameter is initially set to 10 messages and is only available if keyset options (that is, options that support the existence of MBS, DATA, AIM, or IBERT lines) are available.

This parameter specifies the number of messages sent during the loop-signaling-at-terminal and loop-signaling-at-line-card tests, regardless of how the diagnostic is initiated. The diagnostic can be initiated by the line test position (LTP) command DIAG (diagnostic), by shower queue, by automatic line testing, or by incoming message overload (ICMO).

This parameter specifies the number of messages sent during the circuit test part of the SRT on MBS and DATA lines. The parameter also sets the default value for the number of messages to send for the CKTTST command at the LTPMAN level and the CKTTST ALT level if no value is specified.

Test failure flags

A circuit test or loop signaling test fails when the number of messages sent does not equal the number of messages received, or the messages sent do not

MDC Circuit Test Enhancement (continued)

match the messages received. The MDC Circuit Test Enhancement feature adds the following flags to help in diagnosing the cause of a failure:

- The failure flag “L" (uppercase L) indicates a failure has occurred when a circuit test or loop signaling test is run at the line card. If the loop-signaling-at-line-card test of the diagnostic fails, the failure flag “L" is set regardless of the current failure status.
- The failure flag “l" (lowercase l) indicates a failure has occurred when a circuit test or loop signaling test is run at the terminal. If the loop-signaling-at-terminal test of the diagnostic fails, the failure flag “l" is set regardless of the current failure status.

If the CKTTST command at the LTPMAN level of the MAP fails, or an ALT CKTTST test fails and the circuit test was run at the terminal on a line with no current failure, the failure flag “l" is set. If the CKTTST command at the LTPMAN level of the MAP fails, or an ALT CKTTST test fails and the circuit test was run at the line card on a line with no current failure, the failure flag “L" is set.

There are six possible circuit test results for the LTPMAN CKTTST command and ALT CKTTST test:

- test passes, circuit test run at the line card
- test fails, circuit test run at the line card, but at least one message is sent and received correctly
- test fails, circuit test run at the line card, but no messages are received correctly
- test passes, circuit test run at the terminal
- test fails, circuit test run at the terminal, but at least one message is sent and received correctly
- test fails, circuit test run at the terminal, but no messages are received correctly

If the line being tested already had another failure flag set, the following rules are followed to determine which failure flag is set based on the above six results:

- A circuit test failure in which the hardware is closer to the switch overrides a failure in which the hardware is further from the switch. (A failure at a line card overrides a failure at a terminal.)
- A pass or failure of the LTPMAN CKTTST command does not change a shower queue indication “Q," since the shower queue tests are more

MDC Circuit Test Enhancement (continued)

rigorous than a circuit test. The ALT CKTTST test does not run on lines with a shower queue indication “Q."

- A pass or failure of the LTPMAN CKTTST command does not change a minor ICMO indication “i," since the minor ICMO tests required are more rigorous than a circuit test. The ALT CKTTST test does not run on lines with a minor ICMO indication “i."
- A circuit test failure does not override a more severe failure, since the circuit test is a very limited test.
- A circuit test pass upgrades a diagnostic failure “D" or a short diagnostic failure “S" to a need diagnostic failure “N," since a pass indicates that at least part of the circuit is working.

LCARDALARM and LSETALARM office parameters

Two office parameters are added to Table OFCVAR to store the minor, major, and critical alarm threshold settings for the two failure flags. These office parameters are LCARDALARM, for circuit test failures at the line card “L" alarm thresholds, and LSETALARM, for circuit test failures at the terminal “l" alarm thresholds.

These two office parameters should not be changed using table control. They should only be changed using the ALMSTAT (alarm status) command at the LTP of the MAP. If these office parameters are changed using table control, a cold restart of the entire switch is required.

Enhanced CKTTST command

The command CKTTST is added at menu position 11 to the ALT level of the MAP. When this command is executed, the CKTTST sublevel of the ALT level is entered. The CKTTST sublevel is only available if keyset options are available. The CKTTST sublevel has the same basic layout and functions as the extended diagnostic (DIAG), short diagnostic (SDIAG), balanced network (BAL), and line insulation test (LIT) sublevels of the ALT level. If any keys on the set of an MBS or DATA line are pressed while the test is running, an ALT CKTTST test run at the terminal may fail.

The ALT INFO_ (inform) command is changed so that CKTTST is a valid entry for the “Test type or LEN" field. This allows the CKTTST tests in Table ALTSCHED (Automatic Line Testing Schedule) to be displayed. The CKTTST entry for the “Test type or LEN" field is only available if keyset options are available.

The DEFINE_ (define) command is changed so that parameters that are distinctive to a particular ALT level are part of the DEFINE_ command syntax for the user in the corresponding ALT level.

MDC Circuit Test Enhancement (continued)

The parameters NUMMSG, SERVICE, and LOCATION are added to the DEFINE_ command. These parameters are only available at the CKTTST sublevel of the ALT level. These parameters are only accepted if the test being defined is not an extension test. An error message is displayed if the test is an extension test and one of these parameters is entered.

The NUMMSG parameter indicates the number of messages to send during the circuit test. This parameter has a range of 1 to 50 messages. If no value is assigned for NUMMSG, the parameter is assigned the value in the office parameter CIRCUIT_TEST_NUMBER_MESSAGES.

The SERVICE parameter indicates which types of keyset lines to test during the ALT CKTTST test. This parameter specifies whether to test only MBS lines, to test only data lines (DATA, AIM, and IBERT lines), or to test all types of keyset lines. If no value is assigned for SERVICE, the switch runs the test as if all types of keyset lines are to be tested.

The LOCATION parameter indicates where the circuit test is run during the ALT CKTTST test. This parameter can specify that the test is to be run either at the line card or at the terminal. If no value is assigned for LOCATION, the switch runs the test at the terminal.

An ALT CKTTST test also can be set up using Table ALTSCHED. Subfields NUMMSG, SERVICE, and LOCATION are available if subfield TEST is set to CKTTST for the tuple in Table ALTSCHED. There are no default values for these subfields in table control: all subfields must be specified. The CKTTST entry for subfield TEST and the parameters NUMMSG, SERVICE, and LOCATION are only available if keyset options are available.

The streams and line concentrating device test sets for an ALT CKTTST test are assigned in the same manner as the DIAG, SDIAG, BAL, and LIT tests. No test equipment is required to run the circuit test. A maximum of two line concentrating device test sets are allowed for each line concentrating device. This restriction prevents a message overload on the line concentrating device. The ALT CKTTST test is only valid on LCMs.

The ALT CKTTST tests are scheduled in the same manner as the DIAG, SDIAG, BAL, and LIT tests. When the scheduled ALT CKTTST test runs, only the keyset lines specified by the SERVICE parameter are tested. All other lines in the line equipment number (LEN) range are skipped. The ALT CKTTST test tests only the appropriate keyset lines in the line manual busy (MB) or line idle (IDLE) states, as is the case for the ALT DIAG, SDIAG, LIT, and BAL tests. The ALT CKTTST test does not run on nonworking lines.

MDC Circuit Test Enhancement (continued)

The diagnostic failure flags are assigned as previously described in “Test failure flags" in this feature description. If an ALT CKTTST test is run on an AIM or IBERT line with the LOCATION parameter set to TERMINAL, the diagnostic failure flags are updated as if the ALT CKTTST test is run at the line card, since AIM and IBERT lines do not have terminals.

There is no ALT CKTTST retest. If a line fails the ALT CKTTST test, it remains failed. The failure flag is cleared if the line passes the next ALT CKTTST test cycle.

If a line passes the ALT CKTTST test, but a failure flag remains set for the line, the line is counted as a pass in the ALT counts and logs, since it did actually pass the ALT CKTTST test. The ALT109 log displays these lines as a pass rather than displaying the failure flag that remains set.

The amount of time that the ALT CKTTST test waits for a reply from the peripheral for a circuit test on a line depends on the number of messages to send. For one to ten messages, the test waits 30 s. For 11 to 50 messages, the test waits the number of messages times 3 s. In heavy traffic, these wait times may not be long enough for the peripheral to complete the circuit test and send the results back. This failure is flagged as an “e" in the ALT109 log.

Circuit test level

The optional parameter LOCATION is added to the list of parameters for the CKTTST command at the LTPMAN level of the MAP for MBS and DATA lines. This parameter indicates where the circuit test is run. The CKTTST command run at the terminal may fail on an MBS or DATA line if any keys on the set are pressed while the test is running. The LOCATION parameter is not valid for AIM and IBERT lines, since the circuit test is run at the line card. The diagnostic failure flags are assigned and cleared as previously described in “Test failure flags" in this feature description.

The LOCATION parameter has two values: LINECARD, indicating to run the circuit test at the line card, and TERMINAL, indicating to run the circuit test at the terminal. If no value is entered, the default value TERMINAL is used.

The LTP CKTTST command runs on keyset lines in the offline state when the LOCATION parameter is set to TERMINAL. However, a circuit test failure is not recorded because it is assumed that the terminal is not present and the circuit test is expected to fail. A message is printed indicating the circuit test at the terminal ran on a keyset line in the offline state.

The amount of time the LTPMAN level of the MAP waits for a reply for the CKTTST command from the peripheral depends on the number of messages to send. For one to ten messages, the LTPMAN level waits 30 s. For 11 to 50

messages, the LTPMAN level waits the number of messages times 3 s. In heavy traffic, these wait times may not be long enough for the peripheral to complete the circuit test and send the results back. In this case, the following message is displayed:

```
No response from peripheral
```

Station ringer test functionality

The circuit test functionality is added to the end of the SRT. The office parameter CIRCUIT_TEST_NUMBER_MESSAGES specifies the number of messages to send for the circuit test portion of the SRT. If any keys on the set are pressed while the test is running, the circuit test portion of the SRT may fail on an MBS or DATA line.

The amount of time the SRT waits for a reply for the circuit test portion of the test from the peripheral depends on the number of messages to send:

- For one to ten messages, the SRT waits 30 s.
- For 11 to 20 messages, the SRT waits 60 s.
- For 21 to 30 messages, the SRT waits 90 s.
- For 31 to 40 messages, the SRT waits 120 s.
- For 41 to 50 messages, the SRT waits 150 s.

In heavy traffic, these wait times may not be long enough for the peripheral to complete the circuit test and send the results back. The results are returned and displayed, however, when the peripheral has completed the circuit test.

Translations table flow

MDC Circuit Test Enhancement does not affect translations table flow.

Limitations and restrictions

The following limitations and restrictions apply to MDC Circuit Test Enhancement:

- This feature does not include enhanced circuit testing capabilities on integrated voice and data (IVD) lines.
- The CKTTST command run at the terminal may fail on an MBS or DATA line if any keys on the set are pressed while the test is running.
- The office parameter CIRCUIT_TEST_NUMBER_MESSAGES, the CKTTST command at the LTPMAN level, and the ALT CKTTST test are only available if keyset options (that is, options that support the existence of MBS, DATA, AIM, or IBERT lines) are available.

MDC Circuit Test Enhancement (continued)

- The restrictions and limitations of the ALT level apply to the ALT CKTTST test.
- The office parameters LCARDALARM and LSETALARM should not be changed using table control. These parameters should be changed using the ALMSTAT command at the LTP level of the MAP. If these office parameters are changed using table control, a cold restart of the entire switch is required.

Interactions

MDC Circuit Test Enhancement has no functionality interactions.

Activation/deactivation by the end user

The MDC Circuit Test Enhancement feature changes the user interface in the following ways:.

- The CKTTST command is added to the ALT level of the MAP. When this command is executed, the CKTTST sublevel of the ALT level is entered. The CKTTST sublevel is only available if keyset options are available. The CKTTST sublevel has the same basic layout and functions as the DIAG, SDIAG, BAL, and LIT sublevels of the ALT level.
- The CKTTST command at the LTPMAN level of the MAP has the parameter LOCATION added so the circuit test can be run at either the line card or the terminal. The CKTTST command is valid on MBS, DATA, AIM, and IBERT lines.
- The POST (post) command at the LTP level of the MAP is updated so lines that fail ALT CKTTST, LTPMAN CKTTST, or loop signaling tests of the diagnostic can be displayed.
- The ALMSTAT command at the LTP level of the MAP is updated so the minor, major, and critical alarm thresholds for the diagnostic failures “L" and “l" can be changed.
- The ALT INFO_ command at the ALT level of the MAP is updated so CKTTST is a valid entry for the “Test type or LEN" field if keyset options are available.
- The DEFINE_ command at the ALT level of the MAP has the parameters NUMMSG, SERVICE, and LOCATION added to support the CKTTST sublevel. These parameters are only available in the CKTTST sublevel.

Billing

MDC Circuit Test Enhancement does not affect billing.

Station Message Detail Recording

MDC Circuit Test Enhancement does not affect Station Message Detail Recording.

Datafilling office parameters

The office parameters CIRCUIT_TEST_NUMBER_MESSAGES, LCARDALARM, and LSETALARM added by this feature have been discussed previously in this feature description. The procedure for datafilling each of these three parameters is given below. For more information about these office parameters, refer to *Office Parameters Reference Manual*.

Datafill procedure for CIRCUIT_TEST_NUMBER_MESSAGES

The office parameter CIRCUIT_TEST_NUMBER_MESSAGES in Table OFCVAR specifies the number of messages to send for the circuit test portion of the diagnostic or SRT. This parameter is only available if keyset options are available. The default value is 10.

Datafill procedure for LCARDALARM

The office parameter LCARDALARM is added in Table OFCVAR to specify the minor, major, and critical alarm thresholds for circuit test or loop signaling failures at the line card “L" (uppercase L). When the number of “L" failures is equal to or greater than one of the alarm thresholds, the respective alarm is raised. The default values for these thresholds are 100, 150, and 200, respectively. The ALMSTAT command at the LTP level of the MAP is used to change these thresholds. If this office parameter is changed using table control, a cold restart of the entire switch is required.

Datafill procedure for LSETALARM

The office parameter LSETALARM is added in Table OFCVAR to specify the minor, major, and critical alarm thresholds for circuit test or loop signaling failures at the terminal “l" (lowercase L). When the number of “l" failures is equal to or greater than one of the alarm thresholds, the respective alarm is raised. The default values for these thresholds are 100, 150, and 200, respectively. The ALMSTAT command at the LTP level of the MAP is used to change these thresholds. If this office parameter is changed using table control, a cold restart of the entire switch is required.

MDC Circuit Test Enhancement (continued)

The following table shows the office parameters used by MDC Circuit Test Enhancement. For more information about office parameters, refer to *Office Parameters Reference Manual.*

Office parameters used by MDC Circuit Test Enhancement

Table name	Parameter name	Explanation and action
OFCVAR	CIRCUIT_TEST_ NUMBER_ MESSAGES	Specifies the number of messages for the circuit test portion of the diagnostic or SRT. Enter a value from 1 to 50. The default value is 10.
OFCVAR	LCARDALARM	Specifies the minor, major, and critical alarm thresholds for circuit test or loop signaling failures at the line card. Enter 3 values from 0 to 32,767 to specify the major, minor, and critical alarm thresholds, respectively. The default values are 100 (minor), 150 (major), and 200 (critical).
OFCVAR	LSETALARM	Specifies the minor, major, and critical alarm thresholds for circuit test or loop signaling failures at the terminal. Enter 3 values from 0 to 32,767 to specify the major, minor, and critical alarm thresholds, respectively. The default values are 100 (minor), 150 (major), and 200 (critical).

Datafill sequence

The following table lists the tables that require datafill to implement MDC Circuit Test Enhancement. The tables are listed in the order in which they are to be datafilled.

Datafill tables required for MDC Circuit Test Enhancement

Table	Purpose of table
LNINV	Line Circuit Inventory. This table lists the data for each line card slot.
MTAHORIZ	Metallic Test Access Horizontal Connection. This table lists the assignments of line test units to a horizontal group of metallic test access minibar drivers (MTAMS).
CLLIMTCE.DIAGDATA	Diagnostic Data. This table is a subtable of Table CLLIMTCE (Common Language Location Identifier Maintenance) that is used to modify the trunk data when the field values differ from the default values.
ALTSCHED	Automatic Line Testing Schedule. This table contains the schedules for ALT tests. The table editor is used to add, update, or delete data in Table ALTSCHED.

Datafilling table LNINV

Table LNINV (Line Circuit Inventory) lists the data for each line card slot.

The following table shows the datafill specific to MDC Circuit Test Enhancement for table LNINV. Only those fields that apply directly to MDC Circuit Test Enhancement are shown. For a description of the other fields, refer to the data schema section of this document.

Datafilling table LNINV

Field	Subfield or refinement	Entry	Explanation and action
LEN		LEN	Line Equipment Number. This field specifies the site, frame, unit, drawer, shelf, slot and circuit number for the line. Enter the LEN.

Datafill example for table LNINV

The following example shows sample datafill for table LNINV. The following example shows the LEN for the line.

MAP display example for table LNINV

```
LEN          CARDCODE  PDGRP  STATUS   GND  BNV  MNO  CAR
_____________________________________________________________
HOST 00 0 00 00  2X17AB  STDLN  WORKING  N   NL  N  NIL
```

Datafilling table MTAHORIZ

Table MTAHORIZ (Metallic Test Access Horizontal Connection) lists the assignments of line test units to a horizontal group of metallic test access minibar drivers (MTAMS).

The following table shows the datafill specific to MDC Circuit Test Enhancement for table MTAHORIZ. Only those fields that apply directly to MDC Circuit Test Enhancement are shown. For a description of the other fields, refer to the data schema section of this document.

Datafilling table MTAHORIZ

Field	Subfield or refinement	Entry	Explanation and action
HORIZ		0 to 127	MTA Horizontal. This field specifies the horizontal agent to which the test equipment is connected. Enter a value from 0 to 127.

MDC Circuit Test Enhancement (continued)

Datafill example for table MTAHORIZ

The following example shows sample datafill for table MTAHORIZ. The following example shows the actual horizontal connection on the physical driver.

MAP display example for table MTAHORIZ

```
HORIZ  HORIZGRP  HORIZAGT          MTAGRP
_____________________________________________________
 0       0      L  LTU  0   (0 0)  (1 0)  (3 0)  $
```

Datafilling table CLLIMTCE.DIAGDATA

Table CLLIMTCE.DIAGDATA (Diagnostic Data) is a subtable of Table CLLIMTCE (Common Language Location Identifier Maintenance) that is used to modify the trunk data when the field values differ from the default values. Table CLLIMTCE lists the type of line test equipment (synchronous or nonsynchronous) located at the far end of each outgoing trunk group and specifies whether a signaling test is run after a diagnostic test.

The following table shows the datafill specific to MDC Circuit Test Enhancement for table CLLIMTCE.DIAGDATA. Only those fields that apply directly to MDC Circuit Test Enhancement are shown. For a description of the other fields, refer to the data schema section of this document.

Datafilling table CLLIMTCE.DIAGDATA

Field	Subfield or refinement	Entry	Explanation and action
EXTRKNM		0 to 9999	External Trunk Number. This field specifies the trunk number assigned to the trunk by the operating company. Enter a value from 0 to 9999.

Datafill example for table CLLIMTCE.DIAGDATA

The following example shows sample datafill for table CLLIMTCE.DIAGDATA. The following example shows one in-service trunk in the group with an external trunk number of 208.

MAP display example for table CLLIMTCE.DIAGDATA

```
EXTRKNM  DBREC  DBTRANS  DIGDBRCV  DIGDBTRN  PRECBAL
COMPRES  LOOP  CABLE  CABLEPR  ZONE  EML  NML  NIAL
INSVCE
_____________________________________________________
208       35       47      4          4      2X77AC    HI
SH     T001     767    1     60   23    37      Y
```

Datafilling table ALTSCHED

Table ALTSCHED (Automatic Line Testing Schedule) contains the schedules for ALT tests. The table editor is used to add, update, or delete data in Table ALTSCHED.

Table ALTSCHED is modified so that CKTTST is a valid entry for subfield TEST. Subfields NUMMSG, SERVICE, and LOCATION are added and are available if subfield TEST is set to CKTTST. The CKTTST entry for subfield TEST and subfields NUMMSG, SERVICE, and LOCATION are only available if keyset options are available.

The following table shows the datafill specific to MDC Circuit Test Enhancement for table ALTSCHED. Only those fields that apply directly to MDC Circuit Test Enhancement are shown. For a description of the other fields, refer to the data schema section of this document.

Datafilling table ALTSCHED (Sheet 1 of 2)

Field	Subfield or refinement	Entry	Explanation and action
TESTDEF		see subfields	Test Definition. This field consists of several subfields. Only subfield EXTTST pertains to this feature.
	EXTTST	N	Extension Test. This subfield specifies whether the test is an extension of the number of times that a previously defined test can run. Enter N. ***Note:*** If TEST is set to CKTTST, subfields NUMMSG, SERVICE, and LOCATION require datafill.

MDC Circuit Test Enhancement (continued)

Datafilling table ALTSCHED (Sheet 2 of 2)

Field	Subfield or refinement	Entry	Explanation and action
	TEST	CKTTST	Test Type. This subfield specifies the type of test to be performed. Enter CKTTST. ***Note:*** If TEST is set to CKTTST, subfields NUMMSG, SERVICE, and LOCATION require datafill.
	NUMMSG	1 to 50	Number of Messages. This subfield specifies the number of messages to send during the circuit test. Enter a value from 1 to 50.
	SERVICE	VOICE, DATA, or ALL	Service. This subfield specifies the types of keyset lines to test. Enter one of the following values: • VOICE. Test only MBS lines. • DATA. Test only DATA, AIM, and IBERT lines. • ALL. Test all types of keyset lines.
	LOCATION	LINECARD or TERMINAL	Location. This subfield specifies the location where the circuit test is run. Enter one of the following values: • LINECARD. Run the circuit test at the line card. • TERMINAL. Run the circuit test at the terminal. ***Note:*** If the test is run on an AIM or IBERT line, the test is run at the line card regardless of the value specified for LOCATION, since AIM and IBERT lines do not have terminals.

Datafill example for table ALTSCHED

The following example shows sample datafill for table ALTSCHED. The following example shows a circuit test to be run with 20 messages sent for each test, on all keyset lines at the terminal.

MDC Circuit Test Enhancement (end)

MAP display example for table ALTSCHED

```
ALTTSTID  EXTTST  TEST  NUMMSG  SERVICE  LOCATION
STARTLEN           STOPLEN
STARTTIME                  STOPTIME             CONT1
USERID
_____________________________________________________
DIAGTST1   N      CKTTST  20     ALL     TERMINAL
HOST  00 0 00 00   REM2  00 1  18  19
(MON  20  00  TUE  4  00)  (TUE  20  00  WED  4  00) $
LNMTCJOHN
```

Translation verification tools

MDC Circuit Test Enhancement does not use translation verification tools.

SERVORD

MDC Circuit Test Enhancement does not use SERVORD.

Message Service - Leave Message

Ordering codes

Functional group ordering code: MDC00007

Functionality ordering code: not applicable

Release applicability

BCS29 and up

Prerequisites

To operate, Message Service - Leave Message has the following prerequisites:

- BAS Generic, BAS00003
- MDC Minimum, MDC00001
- MDC Standard, MDC00003

Description

Message Service - Leave Message is part of the enhanced message service available to a DMS-100 office to minimize the need for paper-based message communication. Feature package NTXE47AA, Meridian Display Communication, includes the Leave Message (LVM), Message List Editing (MLE), Call Covering (CCV), and Executive Message Waiting (EMW) features.

Message Service - Leave Message enables the end user to leave and retrieve messages at a Meridian business set (MBS) with a display. The displayed message shows various information, such as the name and number of the calling party (or the number only) and an associated time stamp. In the case of repeated messages, the number of times a caller has telephoned is indicated, together with the time of the last call.

Operation

Background

Previous message service and call return features provided message service activation by numeric access code. Message Service - Leave Message allows a calling party to leave a message at the called station by key access. Similarly, the called party can return the call at his or her station by key access.

Message Service - Leave Message (continued)

Message Service - Leave Message provides the following enhancements to the existing message services, Message Waiting (MWT) and Call Request (CAR):

- enables a calling party to leave a message for the called party (requesting a call back)
- allows the called party to inspect messages (using the display set) and to delete or return selected messages
- enables a third party to answer a redirected call and then leave a message for the called party on behalf of the calling party

Message Service - Leave Message functions in the same way as MWT and CAR with the following additional capabilities:

- The feature can be assigned to any directory number (DN) appearance on an MBS.
- Activation of the feature and retrieval of messages is through key access.
- Messages from different services (for example, message center and call request messages) can be directed to different MWT lamps for identification.
- When the called party returns a call (in response to a message), Message Service - Leave Message can be activated during busy tone or audible ringing to leave a message.
- A maximum of 31 messages can be queued against a DN at any one time.
- The calling party can leave a message against the original called party, even after the call has been answered (except when a call is picked up by another station, in which case the message is then left against the connected party instead of the original called party).

Feature activation

When a calling party hears a busy tone or unanswered audible ringing, he or she can leave a message by pressing the EMW key or the LVM key or by dialing the call request activation (CRA) code. The CRA code activates the MWT lamp at the called station.

> ***Note:*** End users can forward calls to a message center and have the message center answer their calls. In this case, the message center activates the MWT lamp at the called station.

When the called party returns a call to the calling party (who originally activated the feature), he or she can activate Message Service - Leave Message to leave a message (during ringing or busy tone).

Message Service - Leave Message (continued)

Message retrieval

The called party retrieves messages by dialing the call request retrieval (CRR) access code or by pressing the MWT key. The MWT lamp is extinguished when all messages have been retrieved. Messages are presented to the called party in first in, first out (FIFO) order.

To retrieve a message queued against a particular DN, the called party presses the DN appearance key and then presses the associated MWT key (lamp state is ON). The called party cannot return the call using other DNs on the same set. An example display is shown below.

Example MAP display of queued message retrieval

```
CALLERS:  4  MSGS,    1 NEW

* = NEXT MESSAGE      9 = HELP
```

The display indicates that there are four queued messages and that one message is new since the called party last reviewed the message list. The called party can press the asterisk (*) key to review the first message or 9 to activate the help display.

When the called party presses the asterisk (*) key, the display shows information about the most recent queued call request from a particular DN. An example message is show below.

Example MAP display of DN specific call request

```
JANE W. JONES     5551212

NEW   JAN 12,     12:23 3X
```

In this example, Jane Jones called from DN 555-1212, the message is new (not previously reviewed), it was received on January 12 at 12:23 a.m., and it was the third time that Ms. Jones called and left a message.

Alternatively, when there are no messages queued against a particular DN, the following display appears.

Message Service - Leave Message (continued)

Example MAP display of no messages queued

```
CALLERS:   0 MSGS,    0 NEW

0 = EXIT CALLERS LIST
```

The called party can then press 0 to exit the feature.

Message type

When Message Service - Leave Message is successfully activated, a message containing the DN and the available class information is generated and stored in the switching office. Each message is classified into one of the following types, depending which station receives the return message:

- return call to the calling party (RTNCG)
- return call to the covering station (RTNCV)
- return call to the message center (RTNMC)

Message waiting class of service

Message waiting class of service (MCOS) provides the capability to administer the use of a feature to a limited number of end users. Messages can be queued against any DN available at the called party's set. Each DN can subscribe to only one MCOS, which is mapped to a MWT key and lamp pair as the mailbox. Sixteen different MCOS levels, ClassA to ClassP, are available for each customer group. A calling party can leave a message for the base station only if both parties subscribe to the same MCOS. If both parties subscribe to several MCOSs, the message is saved in the mailbox that is associated with the first matched MCOS.

One of the MCOS levels, ClassP, has a unique characteristic. When the base station subscribes to ClassP, any station that has EMW, MWT, or CAR can leave a message for the base station. If the message does not belong to any MCOS from ClassA to ClassO, the message is saved in the mailbox associated with ClassP. Thus, if the end user wants to interact with other stations that have EMW, MWT, or CAR assigned, the end user must subscribe to ClassP.

With this grouping capability, if the end user subscribes to ClassA only, only those who subscribe to ClassA are allowed to leave a message against that set. If the end user subscribes to ClassP as well, all messages that do not belong to ClassA are stored in the mailbox associated with ClassP.

Message Service - Leave Message (continued)

Translations table flow

The Message Service - Leave Message translations tables are described in the following list:

- Table KSETFEAT (Business Set and Data Unit Feature) contains the line features that are assigned to an MBS datafilled in Table KSETLINE (Business Set and Data Unit Line Assignment). One entry is required for each feature that is assigned to a line. This table is datafilled when features are assigned to the line in the Service Order System (SERVORD).
- Table IBNFEAT (IBN Line Feature) contains the line features that are assigned to the MDC lines datafilled in Table IBNLINES (IBN Line Assignment). This table contains the DN and numbering plan area (NPA) of the line, the group name to which it belongs, and any options assigned to it. This table is datafilled when features are assigned in SERVORD.
- Table LENFEAT (Line Feature) contains the line features that are assigned to POTS lines datafilled in Table LENLINES (Line Assignment). This table is datafilled when the line is assigned in SERVORD.

The Message Service - Leave Message translation process is shown in the flowchart that follows. The flowchart and data show the translation flow for an MBS, a 2500 set, and a plain old telephone service (POTS) line using options CCV and EMW.

Message Service - Leave Message (continued)

Table flow for Message Service - Leave Message

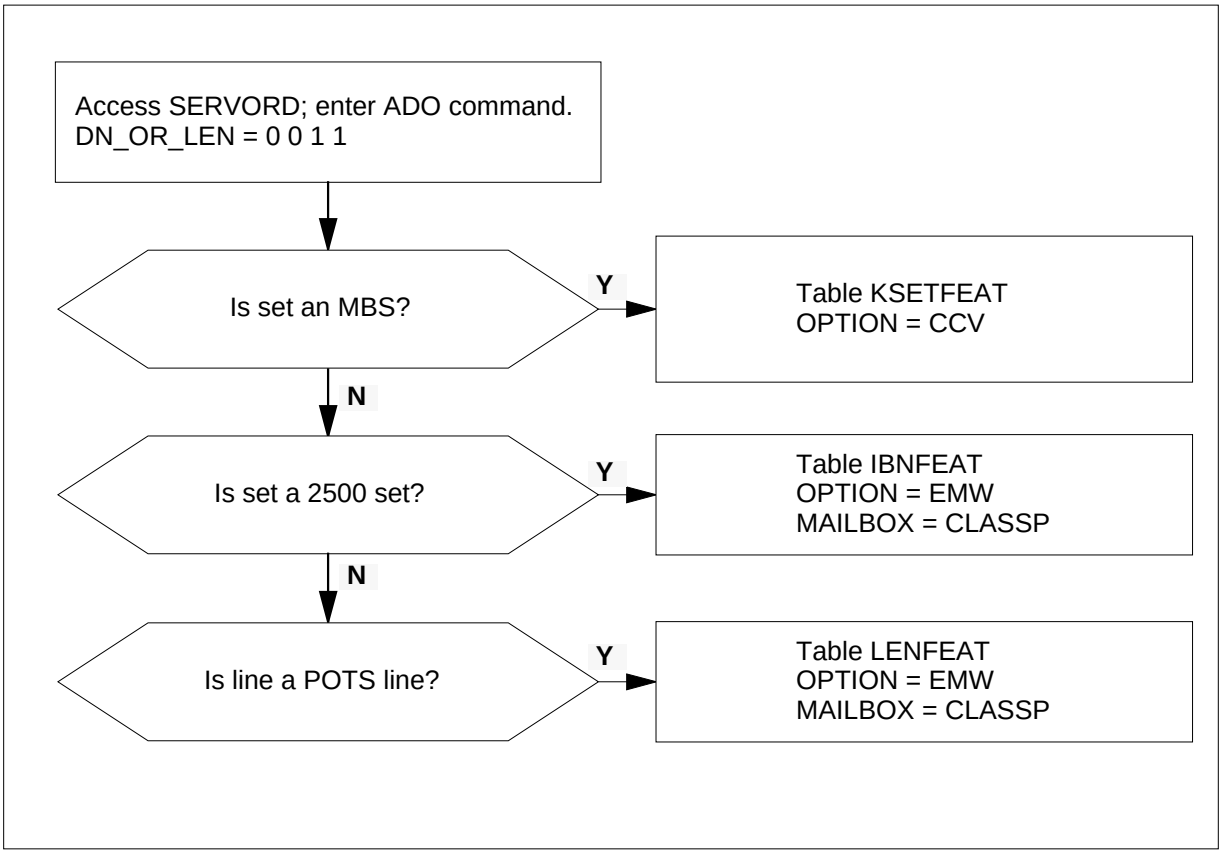

The following table lists the datafill content used in the flowchart.

Datafill example for Message Service - Leave Message

Datafill table	Example data
KSETFEAT	0 0 1 1 0 CCV CCV
IBNFEAT	0 0 1 1 0 MWT EMW STD (CLASSP) $
LENFEAT	0 0 1 1 S PIC EMW STD (CLASSP) $

Limitations and restrictions

Message Service - Leave Message has no limitations or restrictions.

Message Service - Leave Message (continued)

The following limitations and restrictions apply to Message Service - Leave Message:

- The calling party must hear a busy tone or audible ringing before activating Message Service - Leave Message.
- The called party cannot return a call using another DN on the same set.
- CCV is available to multiple appearance directory number (MADN) secondary members only.
- Call Memory is valid only if the call is a direct incoming call (that is, no call redirection occurred).
- A maximum of 31 messages can be queued against a DN at any one time. If the DN already has 31 messages, subsequent messages are denied.
- Call Request Delete All (CRDA) allows an end user to remove all messages queued against his or her set. When Message Service - Leave Message has been assigned, Call Request Delete Specific (CRDS) is blocked.
- A call that has been queued for more than 60 days is deleted (unless it has been specifically saved).
- MWT and EMW are not compatible with automatic call distribution (ACD) lines with option INCALLS.
- Each DN can subscribe to only one MCOS.
- Each customer group can have up to 16 different MCOSs.
- End users cannot sort messages according to MCOS.
- A single MWT key and lamp pair cannot be shared by different DNs. At least two MWT key and lamp pairs are required when two DNs have MWT assigned (even when they subscribe to the same MCOS).
- Multiple MWT lists can be established for each set; however, each list requires a separate MWT key and associated lamp.
- The base station must not have option CRX in the MWT feature or the EMW feature.
- The base station must subscribe to ClassP, or both parties must subscribe to the same MCOS.
- The calling party and the base station must be in the same customer group family.
- Message Service - Leave Message supports M5000-series MBSs (both with and without displays) and 2500 sets. The message list editing capability, however, requires a set with a display.

Interactions

The following paragraphs describe the interactions between Message Service - Leave Message and other functionalities.

The following features interact with Message Service - Leave Message:

- Call Covering Message Service - Leave Message allows an end user with the Call Covering (CCV) feature to leave a message for a primary MADN end user or a forwarded call. The primary MADN end user can then return the call directly to the calling party. When a secondary MADN group member answers a call, the CCV feature allows a message to be left from the calling party on the primary MADN group member's set. If the end user with CCV answers a forwarded call, a message can be left on the forwarded set.
- Executive Message Waiting Service Message Service - Leave Message provides a message waiting environment for the Executive Message Waiting Service feature allowing a maximum of 31 messages to be queued against one set. If the end user already has 31 messages, subsequent messages are denied.
- Key Access for Message Waiting Indication Message Service - Leave Message provides end users with the Key Access for Message Waiting Indication feature with one key on an MBS to support both message waiting indication and message retrieval functions. This capability is typically needed by the end user with a message center and call requests between stations.
- Message Service - Message List Editing Message Service - Message List Editing provides the end user with message editing capabilities that allow the end user with a display set to review, delete, save, and edit any or all of the queued call requests (without necessarily returning the calls).

Activation/deactivation by the end user

Message Service - Leave Message can be activated by the end user by pressing the EMW key or the MWT key or by dialing the CRA code.

Activation/deactivation of Message Service - Leave Message by the end user

At your telephone

1 The calling party places a call.

Response:

The calling party hears a busy tone or audible ringing.

2 The calling party presses the LVM key or the EMW key or dials the CRA code.

Message Service - Leave Message (continued)

Response:

If the called party forwarded his or her calls to a message center, the message center activates the MWT lamp at the called station.

If the attempt to leave a message is unsuccessful, the busy tone or audible ringing is unchanged. The call is unaffected by an unsuccessful attempt.

If the attempt to leave a message is successful, the calling party hears two beeps followed by silence. The MWT lamp is activated at the called station.

3 The called party retrieves messages by dialing the CRR access code or by pressing the MWT key. Messages are presented in FIFO order.

Response:

The MWT lamp is extinguished when all messages have been retrieved.

Billing

Message Service - Leave Message does not affect billing.

Station Message Detail Recording

Message Service - Leave Message does not affect Station Message Detail Recording.

Datafilling office parameters

Message Service - Leave Message does not affect office parameters.

Datafill sequence

The following table lists the tables that require datafill to implement Message Service - Leave Message. The tables are listed in the order in which they are to be datafilled.

Datafill tables required for Message Service - Leave Message

Table	Purpose of table
REASONS	Business Set Reason Display. This table allows various feature and call progression information changes to be displayed.
KSETFEAT (Note)	Keyset Feature. This table associates feature appearances (ISDN LT feature activators and indicators) with feature instances and various feature options.
IBNFEAT (Note)	IBN Line Feature. This table lists line features that are assigned to the IBN lines listed in table IBNLINES.
LENFEAT (Note)	Line Feature Table. This table lists the features that are assigned to a specific line in table LENLINES
Note: This table is datafilled through SERVORD; therefore, no datafill procedure or example is provided. Refer to “SERVORD" for an example of using SERVORD to datafill this table.	

Datafilling table REASONS

Table REASONS (Business Set Reason Display) allows various feature and call progression information messages to be displayed on an MBS. Different reason sets can be provided for each customer group, allowing customized reason sets. Table REASONS is expanded to accept two inspect messages for EMW and CCV, INSPEMW and INSPCCV. The messages are displayed on an MBS display set when the corresponding feature key is inspected through the use of the Inspect feature.

Table REASONS must be datafilled after Table KSETINV (Business Set and Data Unit Inventory) and before option REASDISP can be added to Table CUSTSTN (Customer Group Station Option).

The following table shows the datafill specific to Message Service - Leave Message for table REASONS. Only those fields that apply directly to Message Service - Leave Message are shown. For a description of the other fields, refer to the data schema section of this document.

Datafilling table REASONS

Field	Subfield or refinement	Entry	Explanation and action
REASNSET		alphanumeric	Reason Set This field specifies the name for the set of reasons. Enter a 1- to 16-character alphanumeric name.
REASONID		character	Reason Identification This field specifies the name of the reason. Enter INSPCCV for CCV or INSPEMW for EMW.
MESSAGE		alphanumeric	Displayed Message This field specifies a message for the reason being programmed. Enter a 1- to 15-character alphanumeric message.

Datafill example for table REASONS

The following example shows sample datafill for table REASONS.

Message Service - Leave Message (continued)

MAP display example for table REASONS

```
TABLE: REASONS
REASNSET        REASONID              MESSAGE
_____________________________________________________
DEFAULTSET      INSPEMW               EXE_MSG_WAITING
DEFAULTSET      INSPCCV               CALL COVERING
```

Translation verification tools

Message Service - Leave Message does not use translation verification tools.

SERVORD

SERVORD options EMW and CCV are created by Message Service - Leave Message. Option EMW can be assigned to both MBSs and 2500 sets, while option CCV can only be assigned to MBSs. The ADO (add option), DEO (delete option), NEW (establish service), and CHF (change feature information for preexisting feature) SERVORD commands are enhanced to support the operation of these options.

SERVORD limitations and restrictions

Message Service - Leave Message has no SERVORD limitations and restrictions.

SERVORD prompts

The following table shows the SERVORD prompts used to assign Message Service - Leave Message.

SERVORD prompts for Message Service - Leave Message

Prompt	Valid input	Explanation
MCOS	CLASSA to CLASSP	Specifies the name of the MCOS subscribed to by the MBS or IBN line. Enter an MCOS from CLASSA to CLASSP.
DNLIST	1 to 63	Specifies a list of DNs associated with the same MCOS. Enter a value from 1 to 63.

Note: When using the NEW command to establish service for a new DN with option EMW, the new DN must be in the DNLIST. Only the key of the new DN added to the set may be used in the DNLIST

Message Service - Leave Message (continued)

SERVORD example for adding Message Service - Leave Message

The following SERVORD example shows how Message Service - Leave Message is added using the ADO command.

The following SERVORD examples are provided:

- adding EMW to an MBS using the ADO command
- adding EMW to a 2500 set using the ADO command
- adding CCV to an MBS using the ADO command
- The following service order example shows how EMW is added to a new DN using the NEW command.

Message Service - Leave Message (continued)

SERVORD example for Message Service - Leave Message in prompt mode

```
SO:
> NEW
SONUMBER:  NOW 93 02 23 PM
>
DN_OR_LEN:
> 7202777
LCC:
> N5312
GROUP:
> MDCGRP1
SUBGRP:
> 1
NCOS:
> 10
SNPA:
>1 619
KEY:
> 12
RINGING:
> 1Y
LATANAME:
>1NILLATA
LTG:
> 10
DN_OR_LEN:
> 1HOST 000 00 15
OPTKEY:
>16
OPTION:
>1 EMW
MCOS:
> 1CLASSA
MCOS:
>1$
OPTKEY:
>1$
```

SERVORD example for Message Service - Leave Message in no-prompt mode

```
>1 NEW $ 7202777 M5312 MDCGRP1 0 0 619 2 Y NILLATA 0 HOST 00 0
00 15 6 EMW CLASSA $ $
```

The following service order example shows how EMW is added to an existing MBS using the ADO command.

Message Service - Leave Message (continued)

SERVORD example for Message Service - Leave Message in prompt mode

```
SO:
> 1ADO
SONUMBER:  NOW 88 01 01 PM
> 1
DN_OR_LEN:
> 10 0 1 1
OPTKEY:
> 17
OPTION:
> 1EMW
MCOS:
> 1CLASSP
DNLIST:
> 11
MCOS:
> 1$
OPTKEY:
> 1$
```

SERVORD example for Message Service - Leave Message in no-prompt mode

```
> 1ADO $ 0011 7 EMW CLASSP 1 $ $
```

The following service order example shows how EMW is added to an existing 2500 set using the ADO command.

Message Service - Leave Message (continued)

SERVORD example for Message Service - Leave Message in prompt mode

```
SO:
> 1ADO
SONUMBER:  NOW 88 01 01 PM
> 1
DN_OR_LEN:
> 10 0 1 3
OPTION:
> 1EMW
NOTICE:
> 1STD
MCOS:MCOS:
> 1CLASSP
MCOS:
> 1$
OPTION:
> 1$
```

SERVORD example for Message Service - Leave Message in no-prompt mode

```
>1ADO $ 0013 EMW STD CLASSP $ $
```

The following service order example shows how CCV is added to an existing MBS using the ADO command.

Message Service - Leave Message (end)

SERVORD example for Message Service - Leave Message in prompt mode

```
SO:
>1ADO
SONUMBER:  NOW 88 01 01 PMSONUMBER:  NOW 88 01 01 PM
> 1
DN_OR_LEN:
> 10 0 1 1
OPTKEY:
> 18
OPTION:
> 1CCV
OPTKEY:
> 1$
```

SERVORD example for Message Service - Leave Message in no-prompt mode

```
> 1ADO $ 0011 8 CCV $
```

Message Service - List Management

Ordering codes

Functional group ordering code: MDC00007

Functionality ordering code: not applicable

Release applicability

BCS29 and up

Prerequisites

To operate, Message Service - List Management has the following prerequisites:

- BAS Generic, BAS00003
- MDC Minimum, MDC00001
- MDC Standard, MDC00003

Description

Message Service - List Management enhances the Message Waiting (MWT) and the Call Request Retrieval (CRR) capabilities of an MBS with display. This feature introduces message list editing (MLE) capabilities that allow end users to review and edit any or all of the queued call requests left against their stations (without necessarily returning the calls).

Message Service - List Management is part of the Executive Message Waiting (EMW) package that enables end users with a Meridian business set (MBS) with display to identify the calling party and selectively act on call request messages left against their stations. Message Service - List Management provides the following enhancements:

- allows the called party to inspect messages (using the display set) and to delete or return selected messages
- allows the called party to return the call without manually dialing the DN
- allows the called party to delete a call request without returning the call
- allows the called party to exit temporarily from the MLE environment
- displays the name and number of the calling party (or the number only)
- indicates the number of times a caller has telephoned with the time of the last call

Message Service - List Management (continued)

Operation

The end user presses the EMW key to enter an MLE session. One or more messages queued to the display set are indicated by the MWT lamp. The MLE environment allows the end user to review the MWT list.

To activate the display and monitor the MWT list, the end user of an idle MBS first presses the set's MWT key (associated with a MWT lamp). The end user can then

- press * to view the next message
- press 7 to return a call
- press 6 to toggle the indication from ERASED to SAVED (A message marked ERASED is deleted when the MLE session is over.)
- press 0 to return to the beginning of the MWT list
- press 9 to activate a help display
- press 0 to exit the MWT list

The asterisk (*) key advances the display to each successive message in the queue until the opening screen is shown again. Actions taken while any one of the messages is displayed are performed on the message shown.

Pressing a line key during an MLE session puts the MLE session on hold for a maximum of 4.5 min. This hold allows the end user to answer or place a call.

After entering the MLE environment, the end user can

- press the Exit key or the Release key to exit MLE
- press a second EMW key to place the first MLE session on hold and open a second MLE session

The station display is updated to show the information screen indicating the number and status of messages waiting. The information and the prompts displayed vary according to whether calls are queued and whether the display has 2 lines by 16 characters or 2 lines by 24 characters.

The following figure shows an example of a typical information screen display indicating the number of messages, the type of messages, and the dial pad keys available to examine the different messages.

Message Service - List Management (continued)

Typical information screen dispaly

CALLERS: 3 MSGS, 1 NEW *** = VIEW NEXT CALL 9 = HELP**	**CALLERS: 3 MSGS,** *** = NEXT 9 = HELP**
2 line by 24 character display	**2 line by 16 character display**

Depending on the datafill for the EMW, the message screen can show the originating caller's name and directory number (DN), the date and time of the call, the number of times the caller called, and status of the message. Minimum information would include the DN, date, and status of the call. The time is given if the message was left on the present day. Messages left on previous days show the date only. The following figure shows an example of a typical message screen display.

Typical message screen display

WILLIAM SMITH 5551213 **NEW JAN 12, 12:23 3X**	**5552321** **TRIED JAN 2**
2 line by 24 character display	**2 line by 16 character display**

The information screen differs, depending on whether there are messages in the MWT list. The total number of messages queued, the number of new messages, and the available commands are displayed. The only dial pad keys necessary to examine the different messages in the MLE environment are the Exit and Next keys.

The Next key displays information related to the most recent call request that was queued against the MBS. If the Next key is pressed and the end user is at the last message in the MWT list, the information screen is shown again.

The Exit key returns the end user to the information screen from any message screen. If the information screen is shown when the key is pressed, the MLE session is ended. In addition to the Exit key, pressing the Release key also exits

Message Service - List Management (continued)

the MLE environment. The following figure shows an example exit screen display.

Typical exit screen display

2 line by 24 character display	2 line by 16 character display
CALLERS: 0 MSGS, 0 NEW 0 = EXIT CALLERS LIST	CALLERS: 0 MSGS, 0 = EXIT LIST

Pressing a second EMW key while in an MLE session puts the first MLE session on hold and then opens a second MLE session. Pressing a line key during an MLE session puts the MLE session on hold, thus allowing the end user to initiate an outgoing call or to accept an incoming call.

Returning a call

The end user may retrieve a call request in the MLE environment by pressing the specified dial pad Call key to originate a return call. The system originates the call on the line from which the call arrived.

The attempt to return the call may be unsuccessful because the selected line may be already in use. If this situation occurs, the message is shown again, and the call attempt is not made. The following figure shows an example display when the line is in use.

Typical line in use display screen

2 line by 24 character display	2 line by 16 character display
LINE IN USE . . .	LINE IN USE . . . .

Message Service - List Management (continued)

Erasing or saving messages

The Save and Erase keys allow the end user to save or erase messages depending on the current state of the message. The state of the message is a brief indication of the history of the message.

The message states displayed are the following:

- NEW: The queued call has not previously been seen by the end user (the message is new since the last MLE session or was not reviewed in the previous MLE session).
- READ: The end user previously reviewed the message (but did not try to return the call).
- TRIED: The end user attempted to return the call, but the called party was busy (or did not answer).
- ERASED: The call was successfully returned (or the end user toggled the ERASED key). The message is automatically erased from the MWT list when the MLE session is over.
- SAVED: The end user has specifically marked a message by pressing the SAVED key. This message is retained in memory for future MLE sessions and is unaffected by additional call requests from the same calling party.

When a message is displayed on the screen, the end user can change its state to either ERASED or SAVED by pressing either the Erase key or the Save key.

These states, besides informing the end user of the status of each message, control what happens to the messages when the MLE session is ended. Messages in all states except ERASED are saved from MLE session to MLE session for up to 60 days; messages in the ERASED state do not survive MLE exits. New messages go to the READ state, unless they were not seen by the end user, in which case they stay in the NEW state.

A call request retrieval can be invoked on a message regardless of its state. If the call is successful, that message goes to the ERASED state unless the message was in the SAVED state, in which case it remains saved.

Message format

The information available about each call can be displayed on a single screen. All the possible information associated with a specific message is listed below. The size of the required fields is shown as well, excluding the spaces needed to separate the fields.

- calling party's name (15 characters)
- calling party's DN (10 characters)

- time of arrival (5 characters)
- date of arrival (7 characters)
- number of calls (2 characters)
- message state (6 characters)

The top line of the display uses the same algorithm to display the name and number as the existing display features. Note that the 2 line by 24 character display shows the time of the call if the message was left on the present day. Messages left on previous days show the date only.

Help facility

The help facility must be explicitly invoked by pressing the appropriate dial pad key. Whenever the end user presses a key on the number pad that does not perform a function in the MLE environment, a transient message is displayed for 4 s and then the original display reappears. The following figure shows an example help message screen display.

Help message screen display

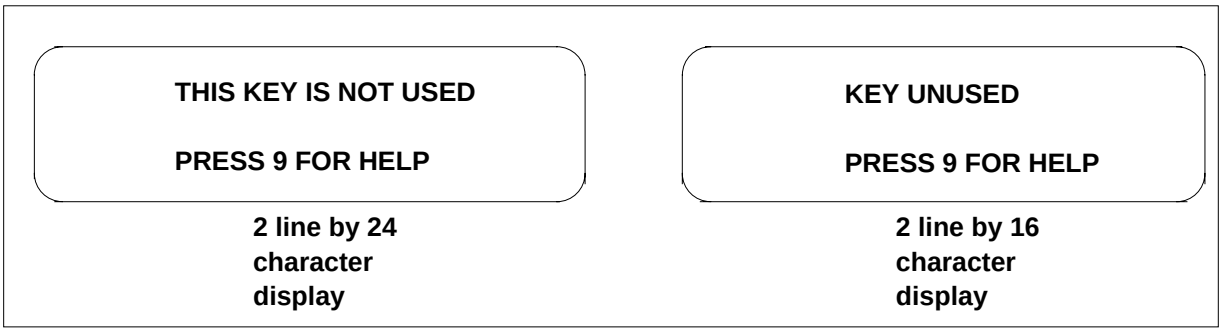

If the end user attempts to act on a message while a transient message is displayed, an appropriate help message is displayed. This help message occurs if the end user attempts a save, erase, or call function while the transient message is displayed.

There are currently a maximum of two screens of successive help information. If the caller's screen is displayed, the next key pressed is likely to invoke a command to exit the MLE session (if there are no messages) or to view the first help message. The following figure shows an example exit message screen display.

Message Service - List Management (continued)

Exit message screen display

2 line by 24 character display	2 line by 16 character display
0 = EXIT CALLERS LIST *** = VIEW NEWEST CALLER**	**0 = EXIT CALLERS** *** = VIEW NEW CALL**

After 5 s the second help screen is displayed. This screen shows the commands that are not applicable in the current context. If the Help key is pressed while a message is displayed, two screens showing the valid operations appear. The following figure shows an example valid operation screen display.

Valid operation screen display

7 = RETURN CALL **6 = ERASE 3 = SAVE CALL**	**7 = RETURN CALL** **6 = ERASE 3 = SAVE**

Any valid key pressed while a help message is displayed on the screen results in ending the help session and executing the command represented by the valid key. If no key is pressed, the first help screen disappears after 5 s and the second help screen appears. If no key is pressed for a another 5 s, the original display appears.

Pausing and ending the MLE session

The MLE session can be put on hold if the end user wishes to initiate an outgoing call, accept an incoming call, or enter another MLE session. After 4.5 min on hold, the held MLE session exits permanently. When the end user attempts to return a call, the MLE session is put on hold automatically for a period of 10 s.

An MLE session can be ended either by pressing the Release key, pressing the Exit key while a transient message is displayed, or by not pressing any key for 4.5 min. The state of the messages in the MWT list are updated when the MLE session is ended.

Message Service - List Management (continued)

The Executive Message Waiting lamp

The EMW lamp is on during an MLE session. If the lamp was lit or flashing when the MLE session was entered, the state of the MWT lamp on ending the MLE session depends on what transpired during the MLE session. If the end user enters an MLE environment by pressing an EMW key whose lamp is not lit, exiting that MLE environment does not light the EMW lamp. If there are any NEW, READ, or TRIED messages remaining in the just-examined MWT list, the MWT lamp remains lit. If there are nothing but SAVED messages, the EMW lamp is unlit. The EMW lamp flashes if the MLE session is on hold.

User interface

Message Service - List Management changes user interface through the message waiting query (MWQ) directory available at the CI (command interpreter) level of the MAP (maintenance and administration position). The MWQ directory allows the end user to interact with the messaging service capabilities of a specified station. The end user is allowed to leave a message against a station, query the status of a station and the messages against the station, and delete the messages from a station.

The following commands have been changed:

- QUEUE
- STATUS

Queue command

The QUEUE (queue a message from the requestor for the particular requestee) command allows the end user to leave a message against the specified station on behalf of another station. Optional parameters date, time, calls, and status are added. These parameters set the appropriate fields in the FTRQ blocks if the requestor has EMW with a display phone.

To leave a message for station 722-7000 on behalf of station 722-7010, the command is as follows:
>QUEUE 7227000 L 7227010

To leave a message for station 722-7000 on behalf of 722-7010 and to indicate the date (January 23, 1989), time (10:30), state (TRIED), and number of calls (8), the command is as follows:
>QUEUE 7227000 L 7227010 O 890123 1030 TRIED 8

Status command

The STATUS (status) command is modified to display the additional information for each message, if applicable. This information includes the

Message Service - List Management (continued)

MLE data, which consists of name, number of messages, status, date, time, and DN.

To query messages left for station 7227000, the command is as follows:
>STATUS 7227000

Translations table flow

Message Service - List Management does not affect translations table flow.

Limitations and restrictions

The following limitations and restrictions apply to Message Service - List Management:

- A maximum of 31 messages can be stored in the switching office for each station regardless of the number of DNs assigned to that station. If the DN already has 31 messages, subsequent messages are denied.
- An audit deletes any call request that has been queued for more than 60 days (unless the call request has been specifically saved).
- Message Service - List Management operates only in a single DMS-100 system.
- Currently, the initiator of a call request can delete that request using the Call Request Delete Specific (CRDS) feature. When Message Service - List Management is assigned to a station, CRDS cannot be invoked.
- If the end user has both the Call Request Delete All and Message Service - List Management features, all messages associated with the relevant line are deleted.
- Each MWT list requires a separate MWT key and associated lamp.
- Message Service - List Management is available in the line group controller (LGC) and the line trunk controller (LTC).

Interactions

The following paragraphs describe the interactions between Message Service - List Management and other functionalities.

The following features interact with Message Service - List Management:

- Call Forwarding A call that is retrieved in the MLE session by pressing the dial pad Call key does not follow any forwarding that may be active on the terminating set.
- Calling Name/Number Delivery Blocking The end user can choose to activate features (either permanently or for each call) that block delivery of his number (or his name and number) to the called party. If these features

Message Service - List Management (continued)

are activated, he cannot use EMW to leave a message. The following list describes the interaction between EMW and the Delivery Blocking features. Note that DN suppression is controlled by option SUPPRESS in Table DNATTRS (Directory Number Attributes).

- If the end user has activated Calling Name/Number Delivery Blocking (CNNB) or Calling Number Blocking (CNB), he cannot activate EMW for that call.
- If the end user has DN suppression on, he can activate EMW for that call.
- If the end user does not have DN suppression on and has activated it for the call using the Calling Number Delivery Blocking (CNDB) feature, he cannot activate EMW for that call.
- Call Request Delete All An end user with the MLE capability can still delete all the messages from his MLE session by exiting the MLE environment and using the Call Request Delete All feature. This feature deletes all messages, including ones in the SAVED state. This deletion is blocked if the end user has the MLE session running but inactive.
- Call Request Delete Specific An end user who has left a call request against another end user who has the MLE capability cannot delete his call request, because Call Request Delete Specific is no longer allowed.
- Call Waiting A call that is retrieved in the MLE session by pressing the dial pad Call key does not terminate on a Call Waiting key. The end user hears busy tone.
- Call Request Retrieve An end user with the MLE capability must still be able to retrieve his calls using the original Call Request Retrieve mechanism. Changes are needed in the feature message processor of that feature to allow it to handle FTRQ blocks of different sizes and different FTR identifiers.
- Calling Name Inspect Key The Inspect key allows the end user with an MBS to display information about the other feature keys and DN keys on the MBS. Pressing these keys when a feature is active is treated as an inspection rather than as an activation of a feature or as a call origination. Currently, the Inspect key returns the number of all requests outstanding on the MWT key. This inspection must be done for the new call requests as well. This inspection simply involves counting the call requests that are queued against the associated DN and have the message class of service (MCOS) associated with the MWT key. The Calling Name Inspect Key feature must be assigned to a key that has a lamp.

Message Service - List Management (end)

- Make Set Busy/Do Not Disturb When Make Set Busy/Do Not Disturb is activated, an incoming call request is queued. The set appears busy to all incoming calls attempting to complete on the set.
- Ring Again Ring Again cannot be invoked on a busy call if that call was initiated by pressing the dial pad Call key in an MLE session.

Activation/deactivation by the end user

Message Service - List Management requires no activation or deactivation by the end user.

Billing

Message Service - List Management does not affect billing.

Station Message Detail Recording

Message Service - List Management does not affect Station Message Detail Recording.

Datafilling office parameters

Message Service - List Management does not affect office parameters.

Translation verification tools

Message Service - List Management does not use translation verification tools.

SERVORD

Message Service - List Management does not use SERVORD.

SERVORD cleanup for MBS

Ordering codes

Functional group ordering code: MDC00007

Functionality ordering code: not applicable

Release applicability

BCS20 and up

Prerequisites

To operate, SERVORD cleanup for MBS requires BAS Generic, BAS00003.

Description

The SERVORD Cleanup for MBS feature enhances the capabilities of several service order (SERVORD) commands, changes the output for two user interface commands, and introduces a new user interface command. The enhancements are designed for use on Meridian Business Set (MBS) lines, but can be used with the Customer Data Change (CDC) facility.

Operation

SERVORD Cleanup for MBS introduces the following SERVORD capabilities:

- Option multiple appearance directory number (MDN) can be added to or deleted from a line using the ADO or DEO commands, respectively. This capability exists for lines with an LCC (line class code) of IBN or PSET.
- The customer group assigned to a line, trunk, or Virtual Facility Group (VFG) can be changed or displayed using the CHG or DSP commands, respectively. This capability exists for lines with an LCC of IBN or PSET.
- The ringing selector can be changed or displayed using the CHG or DSP commands, respectively. This capability exists for lines with an LCC of PSET.
- The display capability for MBSs is now a line option; therefore, an MBS line can be changed to and from a display set by adding or deleting option DISP using the ADO and DEO commands, respectively. This capability exists for lines with an LCC of PSET.
- The SWAP command can be used to swap the directory numbers (DN) of hunt group members or lines with option MDN, speed calling (long and short lists), call forwarding (CFW), or call pickup (CPU). This capability exists for lines with an LCC of IBN or PSET.

SERVORD cleanup for MBS (continued)

The QDN (query directory number) and QLEN (query line equipment number) commands are modified by SERVORD Cleanup for MBS. Each command's display notes whether the MBS line is a display line.

The QGRP (query group) command is introduced by SERVORD Cleanup for MBS. QGRP lists the members in a CPU group or the controller and users of a speed calling group.

User Interface

SERVORD Cleanup for MBS enhances the QDN and QLEN commands. The line listing the line class code indicates whether the PSET is a display set. The example in the figure that follows shows the output for a display set.

Example MAP display of QDN

```
>QDN 7820019
-------------------------------------------------------
DN: 7820019
TYPE: SINGLE PARTY LINE
SNPA: 919  SIG: DT  LNATTIDX:   0
LINE EQUIPMENT NUMBER:   HOST 00 0 00 19
LINE CLASS CODE:   PSET (with DISPLAY)
LINE TREATMENT GROUP:   1
CARDCODE:  6X17AB   GND: N  PADGRP: STDLN  BNV: NL MNO: N
PM NODE NUMBER      :    37
PM TERMINAL NUMBER  :    15
OPTION:
DGT  CWT
-------------------------------------------------------
```

SERVORD Cleanup for MBS introduces a new user interface command, QGRP. This command lists the members in a CPU group or the controller and users of a speed calling group. The following figure illustrates the QGRP command output when used to list the members of a CPU group.

Example MAP display of QGRP for a CPU group

```
>QGRP CPU HOST 00 01 00 01
LINKLEN HOST 00 01 00 01
    HOST 00 01 00 02
    HOST 01 01 01 01 KEY 1
    HOST 01 01 01 01 KEY 3
    HOST 00 01 00 04
    HOST 01 01 01 02 KEY 1
The number of members in the CPU group is 6.
```

SERVORD cleanup for MBS (continued)

The following figure shows the QGRP command output when used to display the controller and members of a speed calling group.

Example MAP display of QGRP for a speed calling group

```
>QGRP SCU HOST 02 0 08 01
CONTROLLER  HOST 02 00 08 01
            HOST 01 01 00 01
            HOST 01 01 01 01
            HOST 01 01 06 04
            HOST 01 01 01 02
The number of members in the SCU group is 5.
```

Translations table flow

SERVORD cleanup for MBS does not affect translations table flow.

Limitations and restrictions

The following limitations and restrictions apply to SERVORD cleanup for MBS:

- The SWAP command cannot be used on the following DNs or LENs:
  - The pilot of a hunt group
  - The pilot or any member of a Bridged Night Number (BNN) hunt group
  - The controller of a speed calling group

Interactions

The following paragraphs describe the interactions between SERVORD cleanup for MBS and other functionalities.

- Call Pickup (CPU)

  If a line with CPU is swapped using the SWAP command, CPU is removed from the line and a message is sent to the end user.

- Call Forwarding

  If a line with a Call Forwarding option is swapped using the SWAP command, the Call Forwarding option is deactivated, but it is not removed from the line.

Activation/deactivation by the end user

SERVORD cleanup for MBS does not require activation or deactivation by the end user.

SERVORD cleanup for MBS (continued)

Billing

SERVORD cleanup for MBS does not affect billing.

Station Message Detail Recording

SERVORD cleanup for MBS does not affect Station Message Detail Recording.

Datafilling office parameters

SERVORD cleanup for MBS does not affect office parameters.

Datafill sequence

SERVORD Cleanup for MBS does not affect datafill.

Translation verification tools

SERVORD cleanup for MBS does not use translation verification tools.

SERVORD

SERVORD Cleanup for MBS introduces the following capabilities:

- Option MDN can be added to or deleted from a line using the ADO or DEO commands, respectively.
- The customer group assigned to a line, trunk, or Virtual Facility Group (VFG) can be changed or displayed using the CHG or DSP commands, respectively.
- The ringing selector can be changed or displayed using the CHG or DSP commands, respectively.
- An MBS line can be changed to and from a display set by adding or deleting option DISP using the ADO and DEO commands, respectively.
- The SWAP command can be used to swap DNs of lines with hunt group, MDN, speed calling, call forwarding, or CPU.

SERVORD limitations and restrictions

SERVORD cleanup for MBS has no SERVORD limitations and restrictions.

SERVORD cleanup for MBS (continued)

SERVORD prompts

The following table shows the SERVORD prompts used for SERVORD Cleanup for MBS.

SERVORD prompts for SERVORD cleanup for MBS (Sheet 1 of 3)

Prompt	Valid input	Explanation
The following prompts are used when adding or deleting MDN from a line:		
OPTION	MDN	Enter MDN, the option to be added to the line.
MDNTYPE	MCA, SCA	Enter the MDN type. MCA specifies multiple-call arrangement, and SCA specifies single-call arrangement. This prompt does not appear when deleting MDN from a line.
PRIMARY	Y or N	Enter Y or N to indicate whether the line is the primary member of the MDN group. This prompt does not appear when deleting MDN from a line.
DIR_NUMBER	7-digit DN	Enter the 7-digit DN to be assigned to the MDN line. This prompt does not appear when deleting MDN from a line.
INTERCEPT_ NAME	BLDN	Enter BLDN to indicate the intercept type is blank DN (directory number). This prompt does not appear when deleting MDN from a line.
The following prompts are used when changing or displaying the customer group assigned to a line or trunk:		
WHAT	LINE or TRUNK	Enter LINE or TRUNK to indicate whether line or trunk information is being changed or displayed.
DN_OR_LEN	7-digit DN or LEN	Enter the 7-digit DN or LEN of the line or trunk to be changed or displayed.
LINE_INFO	CUST	Enter CUST to indicate that the customer group is being changed.

SERVORD cleanup for MBS (continued)

SERVORD prompts for SERVORD cleanup for MBS (Sheet 2 of 3)

Prompt	Valid input	Explanation
CUSTGRP	group name	Enter the new customer group name. This prompt does not appear when displaying customer group information
The following prompts are used when changing or displaying the customer group assigned to a VFG:		
WHAT	VFG	Enter VFG to indicate that a VFG is being changed or displayed.
VIRTGRP	VFG name	Enter the name of the VFG to be changed or displayed.
TYPE_ DIRCETION	IBNVI or IBNVO	Enter the type and direction of the VFG. If IBNVI (IBN incoming) is specified, the next prompt is INCOM_INFO. If IBNVO (IBN outgoing) is specified, the next prompt is OUTGO_INFO.
INCOM_INFO	CUST, ALSC, or LSC	Enter CUST to specify that the customer group is to be changed.
OUTGO_INFO	INCOS or CUST	Enter CUST to specify that the customer group is to be changed.
CUSTGRP	customer group name	Enter the new customer group name. This prompt does not appear when displaying customer group information.
The following prompts are used when changing or displaying the ringing selector of a line:		
WHAT	LINE	Enter LINE to indicate that line information is being changed.
DN_OR_LEN	7-digit DN or LEN	Enter the 7-digit DN or LEN of the line to be changed.
LINE_INFO	RING	Enter RING to change the ringing indicator.
RING	Y or N	Enter Y to enable ringing, or N to disable. This prompt does not appear when displaying line information.
The following prompts are used when adding or deleting DISP to or from a line:		
OPTION	DISP	Enter DISP to add or delete the display capability from an MBS.

SERVORD cleanup for MBS (continued)

SERVORD prompts for SERVORD cleanup for MBS (Sheet 3 of 3)

Prompt	Valid input	Explanation
The following prompts are used when swapping the DNs of lines:		
FROM_DN_OR_ LEN	7-digit DN or LEN	Enter the DN or LEN of the first DN to be moved to the LEN identified by the next prompt (TO_DN_OR_LEN).
TO_DN_OR_LEN	7-digit DN or LEN	Enter the DN or LEN that specifies the new LEN of the first DN. The DN is of the second DN to be moved.
NEXT_DN_OR_ LEN	7-digit DN or LEN	Enter the DN or LEN that specifies the new LEN of the previously listed DN. Enter a dollar sign ($) to indicate that no more DNs are to be moved.
FIRSTDN	LOOP, FREE, or INTERCEPT	Enter LOOP, FREE, or INTERCEPT. This prompt indicates the treatment for the first LEN and the last DN. If LOOP, the last DN is assigned to the first LEN. If FREE, the last DN is set to BLDN (blank directory number) and the first LEN is set to HASU (hardware assigned/software unassigned). If INTERCEPT, the last DN is assigned an intercept and the first LEN is set to HASU.
INTERCEPT_ NAME	intercept name	Enter an intercept name for the last DN. This prompt appears only if FIRSTDN is set to INTERCEPT.

Note: Tables KSETLINE, KSETFEAT, and MDNGRP are automatically datafilled when option MDN is assigned to a business set line using SERVORD. Tables IBNLINES and MDNGRP are automatically datafilled when option MDN is assigned to a 500/2500 line using SERVORD.

SERVORD example for adding SERVORD cleanup for MBS

The following SERVORD example shows how SERVORD cleanup for MBS is added to a non-MDN line using the ADO command.

SERVORD cleanup for MBS (continued)

SERVORD example for SERVORD cleanup for MBS in prompt mode

```
SO:
> ADO
SONUMBER:   NOW 93  1   2   AM
>
DN_OR_LEN:
> HOST 0 0 0 1 0 0 0 1
OPTKEY:
> 2
OPTION:
> MDN
MDNTYPE:
> MCA
PRIMARY:
> N
DIR_NUMBER: 7215555
> 7211000
INTERCEPT_NAME:
> BLDN
OPTION:
> $
```

SERVORD example for SERVORD cleanup for MBS in no-prompt mode

```
>ADO $ HOST 00 01 00 01 2 MDN MCA N 7211000 BLDN $
```

The following service order shows how option MDN is deleted from an MDN line using the DEO command.

SERVORD cleanup for MBS (continued)

SERVORD example for SERVORD cleanup for MBS in prompt mode

```
SO:
> DEO
SONUMBER:   NOW 93  1   2   AM
>
DN_OR_LEN:
> 7211000
OPTION:
> MDN
DIR_NUMBER: 7211000
> 7215555
OPTION:
> $
```

SERVORD example for SERVORD cleanup for MBS in no-prompt mode

```
>DEO $ 7211000 MDN 7215555 $
```

The following service order shows how to change the customer group assigned to a line.

SERVORD example for SERVORD cleanup for MBS in prompt mode

```
SO:
> CHG
SONUMBER:   NOW 93  1   2   AM
>
WHAT:
> LINE
DN_OR_LEN:
> HOST 00 01 01 01
LINE_INFO:
> CUST
CUSTGRP:
> COMKODAK
```

SERVORD example for SERVORD cleanup for MBS in no-prompt mode

```
>CHG $ LINE HOST 00 01 01 01 CUST COMKODAK
```

SERVORD cleanup for MBS (continued)

The following service order shows how to change the customer group assigned to a VFG.

SERVORD example for SERVORD cleanup for MBS in prompt mode

```
SO:
> CHG
SONUMBER:   NOW 93  1   2   AM
>
WHAT:
> VFG
VFGNAME:
> CENVFG
TYPE_DIRECTION:
> IBNVI
NCOS_LSC_ALSC:
> NCOS
NCOS:
> 10
```

SERVORD example for SERVORD cleanup for MBS in no-prompt mode

```
>CHG $ VFG CENVFG IBNVI NCOS 10
```

The following service order shows how to change the ringing selector assigned to a line.

SERVORD example for SERVORD cleanup for MBS in prompt mode

```
SO:
> CHG
SONUMBER:   NOW 93  1   2   AM
>
WHAT:
> LINE
DN_OR_LEN:
> HOST 00 01 01 01
LINE_INFO:
> RING
RINGING:
> Y
```

SERVORD cleanup for MBS (continued)

SERVORD example for SERVORD cleanup for MBS in no-prompt mode

```
>CHG $ LINE HOST 00 01 01 01 RING Y
```

The following service order shows how to add option DISP to a line using the ADO command.

SERVORD example for SERVORD cleanup for MBS in prompt mode

```
SO:
> ADO
SONUMBER:   NOW 93  1   2   AM
>
DN_OR_LEN:
> HOST  00 01 00 01
KEY:
> 2
OPTION:
> DISP
OPTION:
> $
```

SERVORD example for SERVORD cleanup for MBS in no-prompt mode

```
>ADO $ HOST 00 01 00 01 2 DISP $
```

The SWAP command exchanges the DNs of two to 32 LENs. The last DN can be assigned to the first LEN

In the example that follows, two DNs are assigned to different LENs, a LEN is set to HASU, and a DN is set to BLDN. The following table shows the DN-to-LEN assignments before and after the sample SWAP command.

SWAP command table (Sheet 1 of 2)

Before SWAP command		After SWAP command	
LEN	**DN**	**LEN**	**DN**
01 01 01 01	621-1111	01 01 01 01	HASU
02 02 02 02	621-2222	02 02 02 02	621-1111

SERVORD cleanup for MBS (end)

SWAP command table (Sheet 2 of 2)

Before SWAP command		After SWAP command	
LEN	**DN**	**LEN**	**DN**
03 03 03 03	621-3333	03 03 03 03	621-2222
		BLDN	621-3333

The following service order shows how to swap DNs using the SWAP command.

SERVORD example for SERVORD cleanup for MBS in prompt mode

```
SO:
>SWAP
SONUMBER:   NOW 93  1   2   AM
>
DN_OR_LEN:
> 6211111
NEXT_DN_OR_LEN:
> 6212222
NEXT_DN_OR_LEN:
> 6213333
NEXT_DN_OR_LEN:
> $
FIRSTDN:
> FREE
```

SERVORD example for SERVORD cleanup for MBS in no-prompt mode

```
>SWAP $ 6211111 6212222 6213333 $ FREE
```

Short Hunt on MBS

Ordering codes

Functional group ordering code: MDC00007

Functionality ordering code: not applicable

Release applicability

BCS19 and up

Prerequisites

To operate, Short Hunt on MBS has the following prerequisites:

- BAS Generic, BAS00003
- MDC Minimum, MDC00001

Description

Short Hunt on MBS allows incoming calls to hunt up through a set of directory number (DN) appearances on a business set in search of an idle DN on which to terminate. The set of DNs can be either standard DN appearances or multiple appearance directory numbers (MADN) and can include all, or a subset of the DNs on a Meridian business set (MBS).

There is no limit on the number of members that can be included in a short hunt group if all the DNs on the MBS are to be included. However, if only a subset of the DNs on a particular MBS are to be included in the group, the number of members is limited to 24.

Operation

Hunting for an idle DN starts with the dialed DN and continues “up" the keys of an MBS. In this case “up" means increasing key value, the primary directory number (PDN) being key 1.

Hunting is not circular and stops once an idle DN is found or the hunt list is exhausted. If the hunt list is exhausted without finding an idle DN, the call terminate to either an overflow DN, an overflow route, or busy treatments.

Translations table flow

The Short Hunt on MBS translations tables are described in the following list:

- Table KSETFEAT (Business Set and Data Unit Feature) lists the line features assigned to business sets and data units. The KSH feature is assigned to key 1 (field FEATKEY, subfield KEY), and field KVAR, subfield OVERFLOW, consists of subfield OVTYPE (overflow type). The overflow types are N if no overflow for the hunt group to a DN or route is

Short Hunt on MBS (continued)

required; D for a DN; and R for a route. If subfield OVTYPE is set to D, subfield OVDN is required to identify the DN for overflow. If subfield OVTYPE is set to R, subfields TABID for OFRT (Office Route) and KEY for the index route reference number required datafill. The KSH feature is assigned through SERVORD.

- Table KSETLINE (Business Set and Data Unit Line Assignment) defines the business set and data unit numbers supported by the switch and the hardware options assigned to each. For this feature, Table KSETLINE identifies the business set for which the KSH feature is assigned in Table KSETFEAT. This table is datafilled through SERVORD when the business set is assigned.

The Short Hunt on MBS translations process is shown in the flowchart in the following figure. The flowchart and data show the KSH feature addition to the business set through the Service Order System (SERVORD) and the overflow types and subfields required.

Table flow for Short Hunt on MBS

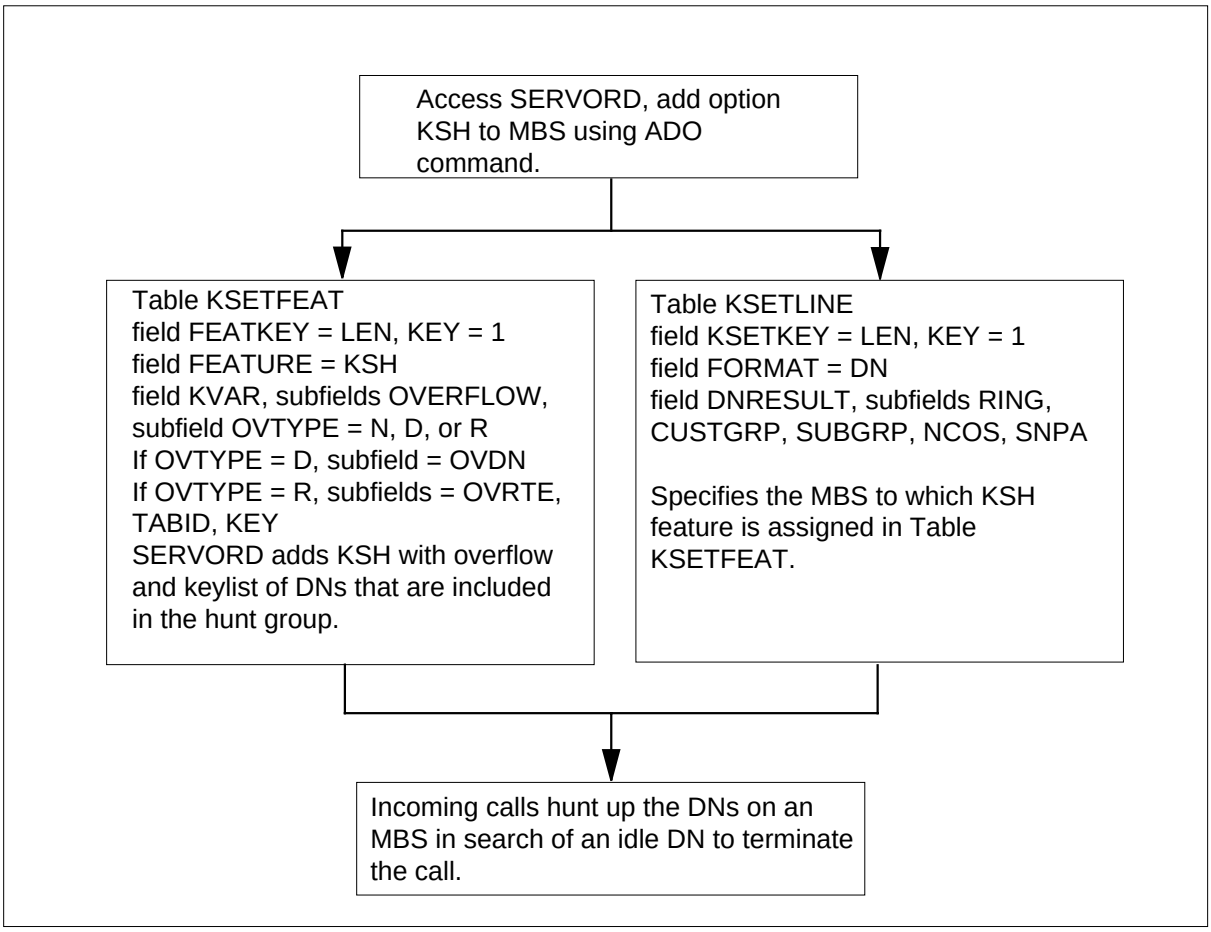

The following items show example data for Short Hunt on MBS:

- LEN and key for KSH - HOST 02 0 00 13 1
- DN for MBS with KSH - 555 1244
- Overflow type - DN
- Overflow DN - 555 1234
- DN keylist for KSH - 1, 2, 3.

The following table lists the datafill content used in the flowchart.

Datafill example for Short Hunt on MBS

Datafill table	Example data
KSETFEAT	HOST 02 0 00 13 1 KSH KSH D OVDN 5551234 1, 2, 3 $
KSETLINE	HOST 02 0 00 13 1 DN Y 5551244 MDCGRP1 0 0 919 $

Limitations and restrictions

The following limitations and restrictions apply to Short Hunt on MBS:

- Only one appearance of Short Hunt on MBS is allowed for each business set.
- Any given DN can only appear in one hunt group.
- Key number 1 does not have to appear in the keylist, only if hunting continues up the keys of an MBS.
- Any MADN group member appearance in hunt keylist must be the PDN of the MADN group.
- Secondary DN members of a MADN group that belong to different short hunt groups can appear on the same set.

Interactions

The following paragraphs describe the interactions between Short Hunt on MBS and other functionalities.

The following features interact with Short Hunt on MBS:

- Call Forwarding Busy (CFB)

  If a short hunt member having the CFB option is reached during hunting, that member is skipped, and hunting continues, taking precedence over

Short Hunt on MBS (continued)

CFB. If a busy short hunt member having the CFB option is dialed directly, the call is routed to the CFB DN, and hunting does not take place.

- Call Forwarding Don't Answer (CFD)

  If Short Hunt on MBS terminates on an idle DN with CFD assigned, once the ringing times out, the call is forwarded.

- Call Forwarding Universal (CFU) and Call Forwarding Intragroup (CFI)

  If a DN appearance in the hunt list has forwarding active, once hunting comes to the DN, all calls are forwarded to the specified number and hunting ceases.

- Call Request and Message Waiting (MWT)

  Call request and MWT are only applicable to the PDN; therefore, activation is only allowed if the dialed DN is that of the PDN.

- Call Waiting (CWT)

  If a busy DN appearance with call waiting is hunted to, the call is not call waited.

- Denied Incoming

  Hunt members with denied incoming activated are skipped over by the hunting process if it is determined that the call would normally be deflected to the attendant.

- Make Set Busy (MSB) and Do Not Disturb (DND)

  When either MSB or DND is active, idle standard DNs are not terminated on, but are skipped over. Idle MADN appearances can be terminated on, but ringing is suppressed for the member with the MSB feature activated.

- Ring Again (RAG)

  If hunting is completed without finding an idle DN and no overflow DN is specified, or the overflow DN is also busy, busy treatment is returned. RAG can be activated, and ringback occurs as soon as a member of the KSH keylist becomes idle. This idle member may, or may not, be the DN dialed by the initiator of RAG.

Activation/deactivation by the end user

Short Hunt on MBS requires no activation or deactivation by the end user.

Billing

Short Hunt on MBS does not affect billing.

Station Message Detail Recording

Short Hunt on MBS does not affect Station Message Detail Recording.

Datafilling office parameters

The following table shows the office parameters used by Short Hunt on MBS. For more information about office parameters, refer to *Office Parameters Reference Manual*. The following procedure identifies the datafill for KSHUNT_EXT_BLOCKS

Office parameters used by Short Hunt on MBS

Table name	Parameter name	Explanation and action
OFCENG	KSHUNT_EXT_BLOCKS	Specifies the number of extension blocks allocated for the Short Hunt on MBS feature. Enter a value from 0 to 32,767. The default value is 1000.

Datafill sequence

The following table lists the tables that require datafill to implement Short Hunt on MBS. The tables are listed in the order in which they are to be datafilled.

Datafill tables required for Short Hunt on MBS

Table	Purpose of table
KSETLINE (Note)	Business Set and Data-Unit Line Assignment. This table defines the business set and data unit numbers supported by the switch and the hardware options assigned to each.
KSETFEAT (Note)	Business Set and Data-Unit Feature. This table lists the line features assigned to business sets and data units.
Note: This table is datafilled through SERVORD; therefore, no datafill procedure is provided.	

Translation verification tools

Short Hunt on MBS does not use translation verification tools.

SERVORD

Option KSH is assigned using the Service Order System (SERVORD) command ADO (add option) The DEO (delete option) command is used to remove option KSH. Option KHS allows incoming calls to hunt up through a set of DN appearances on a business set in search of an idle DN on which to terminate.

Short Hunt on MBS (continued)

SERVORD limitations and restrictions

Short Hunt on MBS has no SERVORD limitations and restrictions.

SERVORD prompts

The following table shows the SERVORD prompts used to assign Short Hunt on MBS to an existing line.

SERVORD prompts for Short Hunt on MBS

Prompt	Valid input	Explanation
DN_OR_LEN	7-digit DN or LEN	Specifies the 7-digit DN or LEN of the line to be changed. Enter the DN or LEN.
OPTKEY	1 to 69	Indicates the key on an MBS to which an option is assigned. Enter a value from 1 to 69.
OPTION	KHS	Indicates the name of the option. Enter KHS.
KEYLIST	1 to 69	Specifies the key numbers of the DNs to which a feature will apply. Enter a value from 1 to 69.
OVTYPE	N, D, R	Specifies the type of overflow required when short hunt group is busy. Enter N for no overflow, D for the DN to which overflow is to go, and R for the route to which the overflow is sent.
Note: Table KSETFEAT and Table KSETLINE are automatically datafilled when Short Hunt on MBS is assigned using SERVORD.		

SERVORD example for implementing Short Hunt on MBS

The following SERVORD example shows how Short Hunt on MBS option KHS is assigned to key 1 of an MBS with no overflow required.

Short Hunt on MBS (end)

SERVORD example for Short Hunt on MBS in prompt mode

```
> ADO
SONUMBER: NOW 92 10 01 PM
>
DN_OR_LEN:
>0 0 7 25
OPTKEY:
> 1
OPTION:
> KHS
OVTYPE:
> N
KEYLIST:
> 1
KEYLIST:
> $
OPTKEY:
> $
```

SERVORD example for Short Hunt on MBS in no-prompt mode

```
> ADO  $  0 0 7 25  1  KSH  N  1  $  $
```

3 Datafilling MDC MBS Standard

The following chapter describes the MDC MBS Standard, MDC00008, functionality.

Call Park Recall Identification

Ordering codes

Functional group ordering code: MDC00008

Functionality ordering code: not applicable

Release applicability

BCS25 and up

Prerequisites

To operate, Call Park Recall Identification has the following prerequisites:

- BAS Generic, BAS00003
- MDC MBS Minimum, MDC00007
- MDC Minimum, MDC00001

Description

Call Park Recall Identification allows the end user of a Meridian business set (MBS) to distinguish call park recalls and directed call park recalls from other types of calls.

This capability is particularly useful for end users who place and answer many calls (for example, secretaries and receptionists). By knowing in advance that a recall is being made, the end user can respond appropriately.

The Call Park (PRK) feature and the Directed Call Park (DCPK) feature allow the end user to park (hold) a call against a directory number (DN) appearance from which the call can be retrieved. When a call is parked, a timer is started. If the parked call has not been retrieved in a specified amount of time, the parked call is recalled to the DN that parked it. This recall to the DN is known as a call park recall. In this feature description, the term call park also refers to directed call park, unless otherwise indicated.

Operation

In the ideal case, the parking of calls using PRK and DCPK and the recall of parked calls work in the following manner.

To park a call using PRK, the end user must press the PRK or DCPK feature key while active on a call. At this time, if the call can be parked, the LCD of this feature key turns solid momentarily and then goes off.

To park a call using DCPK, the end user must press the PRK or DCPK feature key while active on a call. At this time, the LCD of that feature key turns solid

Call Park Recall Identification (continued)

and does not turn off until the end user has completed dialing the DN against which the call is to be parked, the amount of time given to park the call has expired, or one of the parties has gone on-hook. A recall causes the PRK or DCPK feature key to flash until the recall is answered or until the parked party goes on-hook.

An end user is active on a call on the PDN. The end user is in the process of parking the active call using PRK when he or she receives a call park recall to an SDN. This situation is similar to parking a call using DCPK, except that the feature key LCD barely begins to flash before it is turned off, because the amount of time it takes to park a call using PRK is minimal.

An end user is active on a call on the PDN. The end user receives a PRK recall to an SDN and decides to park the active call before answering the recall. The PRK or DCPK feature key LCD starts to flash when the call is recalled. However, when the end user presses the PRK or DCPK feature key to park the active call, the feature key LCD momentarily turns solid and then goes off. A recall is still being made to the set, but the PRK or DCPK feature key LCD has stopped flashing. A similar situation can occur when parking a call using DCPK during a directed call park recall.

Depending on the type of set and the options subscribed to, end users are alerted to Call Park Recall Identification in one of the following ways:

- If the end user has an MBS with display and has the PRK or DCPK feature key, a call park recall is identified by the following events:
  - — A flashing DN on the liquid crystal display (LCD)
  - — A display message on the LCD indicating that the call is a call park recall
  - — A flashing LCD beside the PRK or DCPK feature key
  - — Distinctive ringing
- If an MBS does not have a display, a call park recall is identified by a flashing LCD beside the PRK or DCPK feature key and distinctive ringing.
- If the end user has an MBS with display but accesses the PRK feature by a feature access code instead of by a feature key, a call park recall is identified by a flashing LCD of the DN that parked the call.
- If the end user has an MBS without display and without a PRK or DCPK feature key, or if the end user has a 500/2500 set) a call park recall is identified by distinctive ringing only.

Call Park Recall Identification (continued)

Distinctive ringing

Call Park Recall Identification provides the means to use distinctive ringing as one way to identify a recall. However, option DRING must be assigned to the customer group in Table CUSTSTN (Customer Group Station Option) or normal ringing is heard during a recall.

When option DRING is assigned, Call Park Recall Identification adds a subfield to option DRING in Table CUSTSTN. Subfield RECALL must be set to Y for distinctive ringing on recalls. The end user enters the ring code that is used for recalls. Subfield RECALL is used for all recall types and not solely for call park recalls.

Display message

The display on an MBS for a call park recall includes the parked party's DN, a call park recall display message, and the DN against which the call was parked. The parked party's DN is displayed on the top line of the display. The recall message and the DN against which the call was parked are displayed on the bottom line. If the message and the DN do not fit on the bottom line of the display, only the recall message is displayed on the line.

Display messages are datafilled in Table REASONS (Business Set Reasons Display). For a call park recall message to be displayed, the customer group must have option REASDISP datafilled in Table CUSTSTN.

Call progression

The following sections describe how a call park recall is handled for different recall situations.

In this description, the following terms are used:

parker DN
the DN used to park a call

parked DN
the DN of the party that was parked

parking DN
the DN against which a call was parked

When a parked call is recalled, the LCD of the parker DN flashes, the LCD of the PRK or DCPK key flashes, and distinctive ringing is heard. When the recall is answered, the parked DN is displayed on the top line of the display, and the call park recall message and the parking DN are displayed on the bottom line of the display.

Call Park Recall Identification (continued)

Recall to a primary DN on an MBS

A recall to a primary DN (PDN) occurs in the same manner as a recall to a secondary DN (SDN), except that the display appears before the recall is answered.

Using 123-4567 as the parked DN, 987-6543 as the parking DN, and CPRKRC as the datafilled call park display message, the following table illustrates the events that occur for a call park recall to a PDN.

Call park recall to a PDN (MBS)

Recall progression	Display	PRK or DCPK feature key LCD	Parker DN LCD	Tones
Prior to recall		Off	Off	None
At recall	123-4567 CPRKRC 987-6543	Flashing	Flashing	Distinctive ringing
After parker DN is pressed	123-4567 CPRKRC 987-6543	Off	On	None

Recall to a SDN on an MBS

Using 123-4567 as the parked DN, 987-6543 as the parking DN, and CPRKRC as the datafilled call park message in Table REASONS, the following table illustrates the events that occur for a call park recall to a SDN.

Call park recall to an SDN (MBS)

Recall progression	Display	PRK or DCPK feature key LCD	Parker DN LCD	Tones
Prior to recall		Off	Off	None
At recall		Flashing	Flashing	Distinctive ringing
After parker DN is pressed	123-4567 CPRKRC 987-6543	Off	On	None

Call Park Recall Identification (continued)

Recall to a busy DN on an MBS

If the end user is active on a DN other than the parker DN, the parker DN buzzes, the LCD of that DN flashes, and the LCD of the PRK or DCPK feature key flashes when a recall occurs. When the call is answered, the parked DN is displayed on the top line of the display, and a call park recall message and the parking DN are displayed on the bottom line of the display.

Using 123-4567 as the parked DN, 987-6543 as the parking DN, CPRKRC as the datafilled call park display message, and 321-7654 as the DN of the active call, the following table illustrates the events that occur for a call park recall to a busy MBS.

Call park recall to a busy DN (MBS)

Recall progression	Display	PRK or DCPK feature key LCD	Parker DN LCD	Tones
Prior to recall	321-7654	Off	Off	None
At recall	321-7654	Flashing	Flashing	Buzz
After parker DN is pressed	123-4567 CPRKRC 987-6543	Off	On	None

Translations table flow

The Call Park Recall Identification translations tables are described in the following list:

- Table REASONS (Business Set Reasons Display) contains displays of various feature and call progress information messages on an MBS with display.
- Table CUSTSTN (Customer Group Station Option) contains the station options assigned to each customer group. For an MBS to display a call park recall message, the customer group must be assigned option REASDISP in Table CUSTSTN. When option DRING is also assigned in Table CUSTSTN, a call park recall has distinctive ringing.

Call Park Recall Identification (continued)

Table flow for Call Park Recall Identification

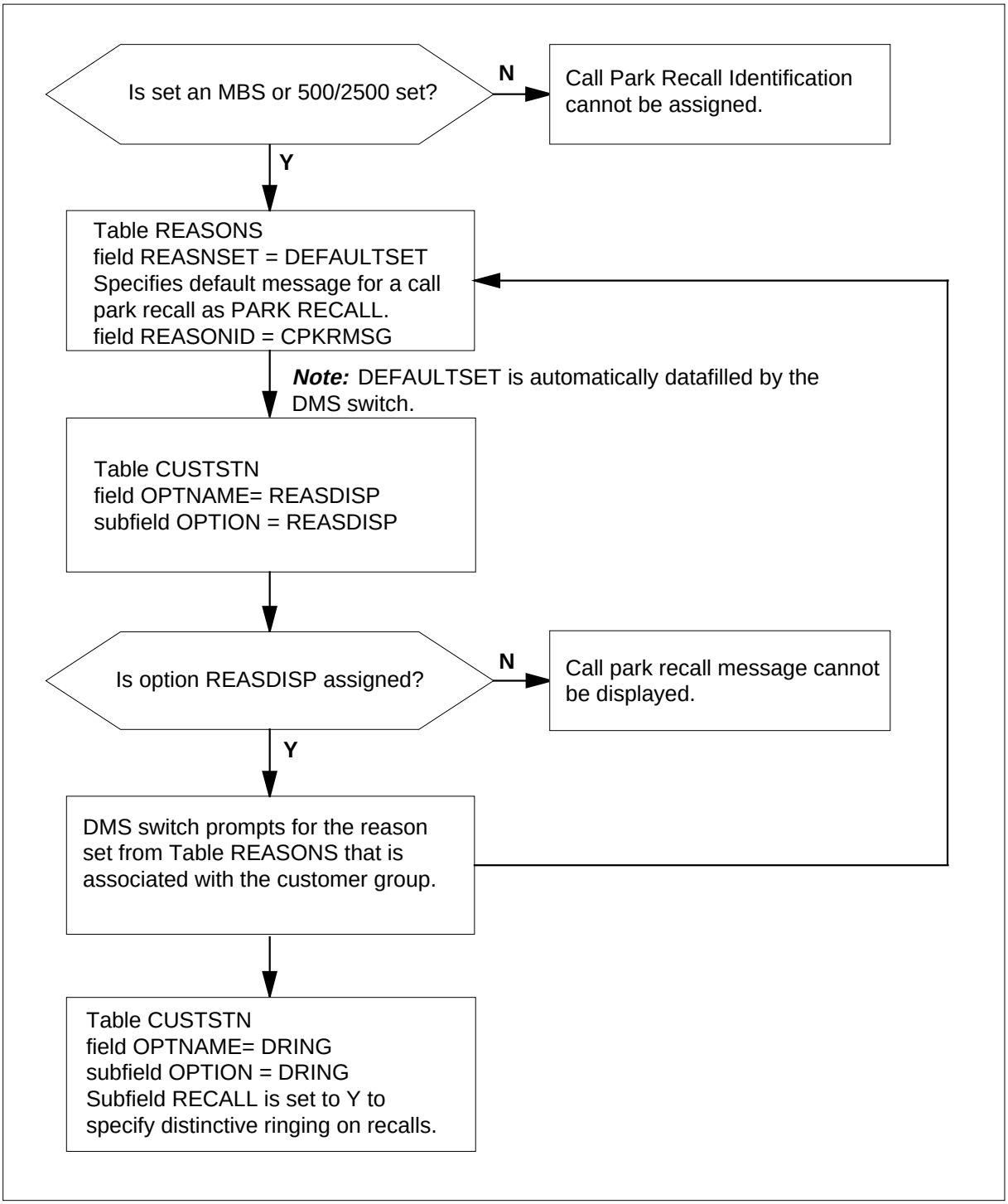

Call Park Recall Identification (continued)

The following table lists the datafill content used in the flowchart.

Datafill example for Call Park Recall Identification

Datafill table	Example data
REASONS	DEFAULTSET CPKRMSG RECALL
CUSTSTN	MDCGRP1 REASDISP REASDISP DEFAULTSETMDCGRP1 DRING DRING Y 3 N ALL 3 N Y N N N N

Limitations and restrictions

The following limitations and restrictions apply to Call Park Recall Identification:

- In cases where the end user is being notified of recall while attempting to park a call, the PRK or DCPK feature key LCD does not flash. For example, the end user is recalled but decides to park an active call before answering the recall. On recall, the PRK or DCPK feature key LCD starts to flash. When the end user presses the PRK or DCPK feature key to park the active call, the feature key momentarily lights steadily and then goes off. A recall is still being made, but the PRK or DCPK feature key LCD is no longer flashing.
- For a recall to be indicated by distinctive ringing, option DRING must be assigned to the customer group in Table CUSTSTN. If this option is not available, the set rings normally.

Interactions

Call Park Recall Identification has no functionality interactions.

The following paragraphs describe the interactions between Call Park Recall Identification and other functionalities.

- Call Park Store

  Call Park Recall Identification affects the operation of Call Park Store only in that it might change the state of the PRK or DCPK feature key LCD.

- Call Pickup, Directed Call Pickup

  If a set is being recalled because of a call park or directed call park time-out and the recall is answered using the Call Pickup or Directed Call Pickup feature from an MBS with display, a call park recall message is displayed rather than a call pickup or directed call pickup message. A call park recall

message consists of the parked party's DN, the call park recall display message, and the parking DN.

- Enhanced Meridian Business Set Reason Display, Calling Name Display

  To receive a call park recall message on the display, either the Enhanced Meridian Business Set Reason Display feature or the Calling Name Display feature must be assigned to the customer group. The exact message that appears on the display is determined by the message that has been datafilled for call park recalls.

Activation/deactivation by the end user

Call Park Recall Identification requires no activation or deactivation by the end user.

Billing

Call Park Recall Identification does not affect billing.

Station Message Detail Recording

Call Park Recall Identification does not affect Station Message Detail Recording.

Datafilling office parameters

Call Park Recall Identification does not affect office parameters.

Datafill sequence

The following table lists the tables that require datafill to implement Call Park Recall Identification. The tables are listed in the order in which they are to be datafilled.

Datafill tables required for Call Park Recall Identification

Table	Purpose of table
REASONS	Business set reason display. This table contains displays of various feature and call progress information messages on an MBS with display.
CUSTSTN	Customer group station option. This table is required for a switching unit with North American translations and the Meridian Digital Centrex (MDC) or the feature AG0508 (Residential Enhanced Services) (RES). This table lists the station options assigned to each of the customer groups.

Datafilling table REASONS

Table REASONS contains displays of various feature and call progress information messages on an MBS with display.

Call Park Recall Identification (continued)

The display messages for various call events (reason), including call park recall, are contained in Table REASONS. Table REASONS contains a default set of reason and their associated display messages. This default reason set is called DEFAULTSET and is automatically datafilled by the DMS switch. Table REASONS requires datafill if the customer group wants display messages other than the ones provided by DEFAULTSET. The default display message for a call park recall is PARK RECALL. If a different display message is desired, a new reason set must be created.

For an MBS to display a call park recall message, the customer group must be assigned option REASDISP in Table CUSTSTN. When option REASDISP is assigned, the DMS switch prompts for the reason set from Table REASONS that is associated with the customer group.

The following table shows the datafill specific to Call Park Recall Identification for table REASONS. Only those fields that apply directly to Call Park Recall Identification are shown. For a description of the other fields, refer to the data schema section of this document.

Datafilling table REASONS

Field	Subfield or refinement	Entry	Explanation and action
REASNSET		alphanumeric (1 to 16 characters)	Reason Set. This field specifies the 1- to 16-character alphanumeric name of the reason set. Enter the reason set name. The default is DEFAULTSET.
REASONID		CPKRMSG	Reason Identification. This field specifies the name of the reason. Enter CPKRMSG to indicate that you are datafilling a display message for call park recall.
MESSAGE		see explanation	Displayed Message. This field specifies a descriptive message for the option being programmed. Enter a message. Messages can be a maximum of 15 characters. The valid characters are: uppercase A to Z, 0 to 9, period (.), colon (:), dash (-), octothorpe (#), and underscore (_). An underscore appears as a space on the display.

Datafill example for table REASONS

The following example shows Table REASONS datafilled with three reason sets: DEFAULTSET, SET1, and SET2. DEFAULTSET is added automatically by the DMS switch. For DEFAULTSET, the message that is displayed for a

call park recall is PARK RECALL. For SET1, the display message is RECALL. For SET2, no call park recall message is datafilled; therefore, the DEFAULTSET message, PARK RECALL, is displayed.

MAP display example for table REASONS

```
    REASNSET         REASONID                MESSAGE
-------------------------------------------------------
  DEFAULTSET       UNKNOWNMSG           NO_CALL_INFO
  DEFAULTSET      EXTERNALMSG           OUTSIDE_CALL
  DEFAULTSET          CONFMSG             CONFERENCE
  DEFAULTSET       BARGEINMSG               BARGE_IN
  DEFAULTSET       TERMCFUMSG               CALL_FWD
  DEFAULTSET       TERMCFDMSG             NO_ANS_FWD
  DEFAULTSET       TERMCFBMSG               BUSY_FWD
  DEFAULTSET       ORIGFWDMSG                FORWARD
  DEFAULTSET       TERMCPUMSG                 PICKUP
  DEFAULTSET          CPKRMSG            PARK_RECALL
  DEFAULTSET          CXRRMSG           TRANSFER_RCL
  DEFAULTSET       ORIGCPUMSG               PICKED_UP
  SET1                CPKRMSG                 RECALL
  SET1             UNKNOWNMSG                NO_INFO
  SET2            EXTERNALMSG                OUTSIDE
```

Datafilling table CUSTSTN (option REASDISP)

Table CUSTSTN (option REASDISP) contains displays of various feature and call progress information messages on an MBS with display.

For an MBS to display a call park recall message, the customer group must be assigned option REASDISP in Table CUSTSTN. If a message reason has been datafilled in Table REASONS but option REASDISP is not assigned in Table CUSTSTN, no message is displayed when a call park recall is answered.

The following table shows the datafill specific to Call Park Recall Identification for table CUSTSTN (option REASDISP). Only those fields that

Call Park Recall Identification (continued)

apply directly to Call Park Recall Identification are shown. For a description of the other fields, refer to the data schema section of this document.

Datafilling table CUSTSTN (option REASDISP)

Field	Subfield or refinement	Entry	Explanation and action
CUSTNAME		alphanumeric (1 to 16 characters)	Customer Group Name. This field specifies the 1- to 16-character alphanumeric name that is assigned to the customer group. Enter the customer group name.
OPTNAME		REASDISP	Option Name. This field specifies the name of the option. Enter REASDISP.
OPTION		OPTION	Option. This field consists of subfield OPTION.
	OPTION	REASDISP	Option. This subfield specifies the name of the option. Enter REASDISP.
If OPTION is set to REASDISP, subfield REASTYPE requires datafill.			
	REASTYPE	alphanumeric (1 to 16 characters)	Reason Type. This subfield specifies the 1- to 16-character alphanumeric reason set name assigned in field REASNET in Table REASONS. Enter the name of a reason set from Table REASONS. To use the default set of display messages, enter DEFAULTSET.

Datafill example for table CUSTSTN (option REASDISP)

The following example shows sample datafill for Table CUSTSTN with option REASDISP datafilled. In this example, the customer group MDCGRP1 has been assigned option REASDISP. The reason set from Table REASONS that is used is DEFAULTSET. Therefore, for display sets in this customer group, the message that is displayed for a call park recall is PARK RECALL.

The second customer group, MDCGRP2, also has option REASDISP. This customer group is using the display messages in reason set SET1. For SET1, the message that is displayed for a call park recall is RECALL.

The third customer group, MDCGRP3, has option REASDISP and is using the display messages in reason set SET2. However, no message has been datafilled for call park recall in this set. Therefore, the message from DEFAULTSET, PARK RECALL, is displayed.

MAP display example for table CUSTSTN (option REASDISP)

```
CUSTNAME     OPTNAME                                OPTION
-------------------------------------------------------------
 MDCGRP1      REASDISP      REASDISP          DEFAULTSET
 MDCGRP2      REASDISP      REASDISP                SET1
 MDCGRP3      REASDISP      REASDISP                SET2
```

Datafilling table CUSTSTN (option DRING)

Table CUSTSTN (option DRING) contains the station options assigned to each customer group. When option DRING is assigned, a call park recall also has distinctive ringing.

The following table shows the datafill specific to Call Park Recall Identification for table CUSTSTN (option DRING). Only those fields that apply directly to Call Park Recall Identification are shown. For a description of the other fields, refer to the data schema section of this document.

Datafilling table CUSTSTN (option DRING) (Sheet 1 of 3)

Field	Subfield or refinement	Entry	Explanation and action
CUSTNAME		alphanumeric (1 to 16 characters)	Customer Group Name. This field specifies the 1- to 16-character alphanumeric name that is assigned to the customer group. Enter the customer group name.
OPTNAME		DRING	Option Name. This field specifies the name of the option. Enter DRING.
OPTION		OPTION	Option. This field consists of subfield OPTION.
	OPTION	DRING	Option. This subfield specifies the option. Enter DRING.
If OPTION is set to DRING, subfields INTRNL, EXTRNL, TRKS, GIC, RECALL, UCD, REST, ACD, and MAKECALL require datafill.			
	INTRNL	Y or N	Internal. This subfield specifies whether intragroup calls are eligible for distinctive ringing. Enter Y or N.

Call Park Recall Identification (continued)

Datafilling table CUSTSTN (option DRING) (Sheet 2 of 3)

Field	Subfield or refinement	Entry	Explanation and action
If INTRNL is set to Y, subfield DRINGTYP requires datafill.			
	DRINGTYP	numeric (1 to 8)	Distinctive Ringing Type. This subfield specifies the type of ring code. Enter a value from 1 to 8.
	EXTRNL	Y or N	External. This subfield specifies whether intergroup calls are eligible for distinctive ringing. Enter Y or N.
If EXTRNL is set to Y, subfield DRINGTYP requires datafill.			
	DRINGTYP	numeric (1 to 8)	Distinctive Ringing Type. This subfield specifies the type of ring code. Enter a value from 1 to 8.
	TRKS	see explanation	Trunks. This subfield specifies which MDC trunks are subject to distinctive ringing. Enter NO if no MDC trunks owned by the customer group are subject to distinctive ringing. Enter SEL if selected MDC trunks owned by the customer group are subject to distinctive ringing. Enter ALL if all MDC trunks owned by the customer group are subject to distinctive ringing.
If TRKS is set to SEL or ALL, subfield DRINGTYP requires datafill.			
	DRINGTYP	numeric (1 to 8)	Distinctive Ringing Type. This subfield specifies the type of ring code. Enter a value from 1 to 8.
	GIC	Y or N	Group Intercom. This subfield specifies whether GIC calls are eligible for distinctive ringing. Enter Y or N.
If GIC is set to Y, subfield DRINGTYP requires datafill.			
	DRINGTYP	numeric (1 to 8)	Distinctive Ringing Type. This subfield specifies the type of ring code. Enter a value from 1 to 8.
	RECALL	Y	Recall. This subfield specifies whether recall calls are eligible for distinctive ringing. Enter Y.
If RECALL is set to Y, subfield DRINGTYP requires datafill.			
	DRINGTYP	numeric (1 to 8)	Distinctive Ringing Type. This subfield specifies the type of ring code. Enter a value from 1 to 8.

Call Park Recall Identification (continued)

Datafilling table CUSTSTN (option DRING) (Sheet 3 of 3)

Field	Subfield or refinement	Entry	Explanation and action
	UCD	Y or N	Uniform Call Distribution. This subfield specifies whether UCD calls are eligible for distinctive ringing. Enter Y or N.
If UCD is set to Y, subfield DRINGTYP requires datafill.			
	DRINGTYP	numeric (1 to 8)	Distinctive Ringing Type. This subfield specifies the type of ring code. Enter a value from 1 to 8.
	REST	Y or N	Remainder. This subfield specifies whether all other calls are eligible for distinctive ringing. These calls include those from POTS lines, POTS trunks, and MDC trunks that are not owned by the customer group. Enter Y or N.
If REST is set to Y, subfield DRINGTYP requires datafill.			
	DRINGTYP	numeric (1 to 8)	Distinctive Ringing Type. This subfield specifies the type of ring code. Enter a value from 1 to 8.
	MAKECALL	Y or N	Make Outbound Call. This subfield specifies whether outbound ACD calls are eligible for distinctive ringing. Enter Y or N.
If MAKECALL is set to Y, subfield DRINGTYP requires datafill.			
	DRINGTYP	numeric (1 to 8)	Distinctive Ringing Type. This subfield specifies the type of ring code. Enter a value from 1 to 8.

Datafill example for table CUSTSTN (option DRING)

The following example shows sample datafill for Table CUSTSTN with option DRING datafilled. In this example, the customer group MDCGRP1 has been assigned option REASDISP. The reason set from Table REASONS that is used is DEFAULTSET. Therefore, for display sets in this customer group, the message that is displayed for a call park recall is PARK RECALL. Because option DRING is assigned and subfield RECALL is set to Y, a call park recall also has distinctive ringing.

The second customer group, MDCGRP2, also has option REASDISP. This customer group is using the display messages in reason set SET1. For SET1,

Call Park Recall Identification (end)

the message that is displayed for a call park recall is RECALL. Because option DRING is not assigned, there is no distinctive ringing.

Note: Table CUSTSTN requires two separate entries to assign both options REASDISP and DRING to the same customer group.

MAP display example for table CUSTSTN (option DRING)

```
CUSTNAME   OPTNAME                                  OPTION
-------------------------------------------------------------
 MDCGRP1     REASDISP      REASDISP             DEFAULTSET
 MDCGRP1     DRING         DRING   Y 3 N ALL 3 N Y N N N N
 MDCGRP2     REASDISP      REASDISP                   SET1
```

Translation verification tools

Call Park Recall Identification does not use translation verification tools.

SERVORD

Call Park Recall Identification does not use SERVORD.

CFW for MADN Secondary Members

Ordering codes

Functional group ordering code: MDC00008

Functionality ordering code: not applicable

Release applicability

BCS26 and up

Prerequisites

To operate, CFW for MADN Secondary Members has the following prerequisites:

- BAS Generic, BAS00003
- MDC Minimum, MDC00001
- MDC Standard, MDC00003
- MDC MBS Minimum, MDC00007

Description

Multiple appearance directory number (MADN) end users have additional call forwarding (CFW) capabilities. As part of the IBN system, a single directory number (DN) is associated with a group of line appearances in the switch. The line appearance groups are called MADN groups, and the individual line appearances are called MADN group members.

There are three types of MADN groups that have different service capabilities: multiple call arrangement (MCA), single call arrangement (SCA), and extension bridging (EXB). MCA allows each group member to access different external destination numbers. SCA limits the system to one active call to an external destination number. EXB allows up to two group members to be active with an external party and can only be assigned to 500/2500 sets. All members of a MADN EXB group have the same CFW and speed calling programming capabilities.

Calls can automatically be programmed to a new destination number with the implementation of IBN call forwarding. Previously, only a primary MADN group member could program a CFW feature. One of the following CFW

CFW for MADN Secondary Members (continued)

features must be assigned to the primary member of the group in order for CFW for MADN Secondary Members to operate:

- call forwarding universal (CFU)—forwards calls to destination numbers inside and outside the customer group
- call forwarding intragroup (CFI)—forwards calls to any destination number within the specified customer group
- call forward fix (CFF)—same function as CFU, except that during feature activation, there is no need to dial the CFWDN. The operating company must identify a CFWDN when this feature is installed for each member.

Secondary members have the same call forwarding capability as the primary member with this feature. Secondary members program CFW when the operating company personnel add the option to the secondary member's capabilities. CFW for MADN Secondary Members (CFMDN) enables the secondary member to program CFW the same as the primary member. CFW for MADN Secondary Members works with either Meridian business sets (MBS) or 500/2500 sets.

Operation

CFW for MADN Secondary Members is handled through service orders or table control. It is activated for each MADN group member and can be assigned to one or more secondary members. Once a secondary MADN group member has been authorized to program the CFW capability, the call forwarding feature reacts as if it were implemented by the primary member. The secondary member can only program the type of CFW feature that has been selected by the primary member.

The secondary member has full capability to activate, deactivate, and program call forwarding on the MADN by using the feature access code. Once activated by a secondary member, the primary member's set reacts as if the option were established there. The DNs on the CFW key list are forwarded when the MADN is forwarded. The primary member continues to receive ring splash and the visual lamp indicating that the system has been forwarded.

Several safeguards have been built into this feature. A negative acknowledgment (NACK) treatment is sent to secondary members who attempt CFW when it has already been activated, or when CFMDN has not been assigned to a member and that member attempts to activate the feature.

When a secondary member has CFMDN capabilities, but the primary member does not, the secondary member receives a second treatment, feature not

CFW for MADN Secondary Members (continued)

allowed (FNAL). FNAL treatment is also received when the secondary and primary members do not have CFW.

> ***Note:*** When the primary member of an EXB group has a CFW feature, all other members of the group can program the feature. EXB is restricted to 500/2500 sets.

Translations table flow

CFW for MADN Secondary Members does not affect translations table flow.

Limitations and restrictions

The following limitations and restrictions apply to CFW for MADN Secondary Members:

The CFMDN feature is available only for secondary MADN group members. All members of an EXB group can program standard call forward even if they do not have the CFMDN feature. Secondary members have the option if they are on an EXB. To qualify for this feature, end users must have the CFU, CFI, or CFF feature.

CFMDN cannot be deleted from a MADN secondary member with a table control CHA command while that member is using call forward programming.

Interactions

The following paragraphs describe the interactions between CFW for MADN Secondary Members and other functionalities.

CFW for MADN Secondary Members does not interact with any other feature. CFMDN is only available for secondary MADN group members. Call forward validation can, however, be used by secondary MADN group members. With this feature, secondary MADN group members can see if a forwarding number was stored and validated.

> ***Note:*** Call forwarding validation may not be possible if the secondary MADN group member has a different translation than the primary member.

Activation/deactivation by the end user

The end user can activate or deactivate CFW for MADN Secondary Members by performing the following steps:

CFW for MADN Secondary Members (continued)

Activation/deactivation of CFW for MADN Secondary Members by the end user

At your telephone

1. For the secondary member to activate CFMDN, the end user must go off-hook or press the MADN DN key on the MBS.

   Response:

   A standard dial tone is received.

2. Dial the CFW feature access code.

   Response:

   The end user hears a special dial tone.

3. The destination DN can be dialed.

   Response:

   If the CFW is successful, a confirmation tone is returned.

   Note: Secondary MADN group members do not have the MBS key activation capability.

Call forwarding deactivation of CFW for MADN Secondary Members by the end user

At your telephone

1. To stop the CFW process, the end user dials the deactivation feature access code.

   Response:

   If the end user successfully deactivates the option, a confirmation tone is heard.

   Note: An end user who attempts to deactivate CFW on a system that has already been deactivated receives a confirmation code.

Billing

CFW for MADN Secondary Members does not affect billing.

Station Message Detail Recording

CFW for MADN Secondary Members does not affect Station Message Detail Recording.

Datafilling office parameters

CFW for MADN Secondary Members does not affect office parameters.

CFW for MADN Secondary Members (continued)

Datafill sequence

To provide the CFMDN feature, Table MDNMEM (Multiple Appearance Directory Number Member) was created. Table MDNMEM is a change-only table used when a primary or secondary MADN group member is established or deleted. All changes are handled through SERVORD; tuples cannot be added to Table MDNMEM. When a member is established, the new entry is automatically entered in this table. When a member is deleted, the entry is automatically deleted. The table is indexed by the line equipment number (LEN) or KEY. When the secondary MADN group member is a 500/2500 set, 0 is used for the KEY.

The following table lists the tables that require datafill to implement CFW for MADN Secondary Members. The tables are listed in the order in which they are to be datafilled.

Note: These tables are datafilled through SERVORD; therefore, no datafill procedure or example is provided. Refer to “SERVORD" for an example of using SERVORD to datafill these tables.

Datafill tables required for CFW for MADN Secondary Members

Table	Purpose of table
MDNMEM (Note)	Multiple Appearance Directory Number Member. Entries in this table are added automatically after multiple appearance directory number (MADN) members are created in table IBNLINES or KSETLINE or using SERVORD.
IBNLINES (Note)	IBN Line Assignments. This table contains the line assignments for data channel links for the Bulk Calling Line Identification (BCLI) feature under the format name of BL.
KSETLINE (Note)	Business Set and Data-Unit Line Assignment. This table contains the directory number appearance for business sets and data units.

Note: When Tables IBNLINES and KSETLINE are restored and MADN groups are identified in the switch, Table MDNMEM will have all its information. Some MDNMEM information is not stored in Tables IBNLINES or KSETLINE. Table MDNMEM must be restored by changing all the tuples instead of adding or deleting information.

Translation verification tools

CFW for MADN Secondary Members does not use translation verification tools.

CFW for MADN Secondary Members (continued)

SERVORD

Several changes have been made to Service Order System (SERVORD) commands so that option CFMDN is valid. This option is available only to secondary MADN group members.

The following service order commands can be used to administer the CFMDN option:

- ADO (add option) adds CFMDN to existing secondary MADN group members.
- DEO (delete option) deletes CFMDN from existing secondary MADN group members.
- NEW (establish service) establishes the feature for new secondary MADN group members.
- QDN (query directory number) queries by the directory number (DN) to determine if the CFMDN option has been added to the record of the service options of the secondary MADN group member.
- QLEN (query line equipment number) queries by the line equipment number (LEN) to determine if the CFMDN has been added to the record of the service options of the secondary MADN group member.
- QLENWRK (query line equipment number working) queries by line equipment number working to determine if the CFMDN has been added to the record of service options of the secondary MADN group member.
- QDNWRK (query DN working) queries by DN working to determine if the CFMDN has been added to the record of service options of the secondary MADN group member.

SERVORD limitations and restrictions

During SERVORD, POTS options CFW F and CFBL are screened for codes such as 911, 611, 411, 0+, 0-, 010, and 011 to prevent them from being assigned as valid forward-to directory numbers. MDC options CFF (Call Forwarding Fixed) and CFB (Call Forwarding Busy) are not screened for these codes, and the cddes can be assigned as valid forward-to directory numbers.

CFMDN cannot be deleted from a MADN secondary member with a SERVORD DEO command while that member is using call forward programming.

CFW for MADN Secondary Members (continued)

SERVORD prompts

The following table shows the SERVORD prompts used to assign CFW for MADN Secondary Members to an existing line.

SERVORD prompts for CFW for MADN Secondary Members

Prompt	Valid input	Explanation
OPTION	CFMDN	Identifies the call forward option for MADN secondary members. Enter CFMDN.
Note: Tables MDNMEM, IBNLINES, and KSETLINE are automatically datafilled when CFW for MADN Secondary Members is assigned using SERVORD.		

SERVORD example for adding CFW for MADN Secondary Members

The following SERVORD example shows how CFW for MADN Secondary Members is added to a secondary MADN group member line using the NEW command.

CFW for MADN Secondary Members (continued)

SERVORD example for CFW for MADN Secondary Members in prompt mode

```
SO:
> NEW
SONUMBER: NOW 90 1 2 AM
>
DN:
> 7224134
LCC:
> PSET
GROUP:
> COMKODAK
SUBGRP:
> 0
NCOS:
> 0
SNPA:
> 613
KEY:
> 4
RINGING:
> Y
LATANAME:
>NILLATA
LTG:
> 0
LEN:
> 1 0 1 26
OPTKEY:
> 4
OPTION:
> MDN
MDNTYPE:
> MCA
PRIMARY:
> N
OPTKEY:
> 4
OPTION:
> CFMDN
OPTKEY:
> $
```

CFW for MADN Secondary Members (end)

SERVORD example for CFW for MADN Secondary Members in no-prompt mode

```
>NEW $ 7224134 PSET COMKODAK 0 0 613 4 Y NILLATA 0 1 0 1 26 4
MDN MCA N 4 CFMDN $
```

EBS Call Forwarding on a per Key Basis

Ordering codes

Functional group ordering code: MDC00008

Functionality ordering code: not applicable

Release applicability

BCS28 and up

Prerequisites

To operate, EBS Call Forwarding on a per Key Basis has the following prerequisites:

- BAS Generic, BAS00003
- MDC Minimum, MDC00001
- MDC MBS Minimum, MDC00007
- MDC Standard, MDC00003

Description

EBS Call Forwarding on a per Key Basis allows each directory number (DN) on a Meridian business set (MBS) to be forwarded to a different DN. The abbreviation for this feature is CFK, or Call Forward Universal per Key.

Prior to this feature, end users could not forward each DN to a different destination. For example, DN 1 could not be forwarded to a different station than DN 2. With this feature, when CFK is assigned to a business set, the end user can forward each DN to a different DN.

> ***Note:*** CFK provides the same forwarding privileges as Call Forward Universal (CFU). Call Forward Universal means that end users can forward their calls to any DN inside or outside the customer group.

A business set can be set up to control CFK in one of two ways. CFK can be activated and deactivated by using a CFK feature key or by using dialed access codes. This feature description describes how the end user forwards and unforwards a DN when using the CFK key and when using access codes. Throughout this feature description, the term *remote DN* refers to the DN to which calls will be forwarded.

Operation

EBS Call Forwarding on a per Key Basis can be controlled either through a CFK feature key assigned in Table KSETFEAT (Business Set and Data Unit Feature) or by dialed access codes. If CFK is to be controlled by access codes,

EBS Call Forwarding on a per Key Basis (continued)

Table IBNXLA (IBN Translation) must be datafilled with CFK activation and cancellation codes.

When EBS Call Forwarding on a per Key Basis is assigned to a dedicated feature key, it must have a lamp with a liquid crystal display (LCD) associated with it. No other feature is allowed to be assigned to the dedicated feature key. The CFK LCD lamp stays on continuously when CFK is activated or reactivated and is turned off when CFK is deactivated. The CFK LCD lamp flashed when the CFK key is pressed.

The end user can perform the following actions using the CFK key:

- activate—enter a remote DN and forward to that DN
- deactivate—stop forwarding but save the remote DN in memory
- deactivate and delete—stop forwarding and erase the remote DN from memory
- reactivate—forward to the remote DN saved in memory (the end user does not need to reenter the remote DN)

There is a distinct difference between feature deactivation and feature cancellation. In the case of deactivation, a forward-to DN is retained in data store for future use. When CFK is cancelled, however, the forward-to DN is permanently deleted from data store. If required again, the forward-to DN must be reentered. To cancel CFK rather than deactivate it (for either single or multiple DNs), the end user must press the octothorpe (#) key instead of the asterisk (*) key at the points indicated.

User interface

EBS Call Forwarding on a per Key Basis slightly changes the output for the Service Order System (SERVORD) query commands QDN (query directory number), QDNWRK (query DN working), QLEN (query line equipment number), and QLENWRK (query LEN working). Without CFK on the set, these commands work as they have prior to BCS28. Starting with BCS28, if a set is datafilled with option CFK, the displays for the QDN and QDNWRK commands more accurately reflect the call forwarding options and status for each DN.

QDN and QDNWRK commands

The QDN and QDNWRK displays differ depending on whether office parameter CFX_SEPARATE_KEYLIST_FEATURE in Table OFCENG is set to Y or N. If this parameter is set to Y, each type of call forwarding on a business set has a separate keylist. If this parameter is set to N, each type of call forwarding on a set shares a common keylist.

EBS Call Forwarding on a per Key Basis (continued)

For separate keylists

Prior to this feature, if the DN had any type of call forwarding (CFU, CFI, CFF, CFB and its variants, or CFD and its variants), Table KSETLINE would indicate such by showing option CFX for that DN. Then, when either the QDN or QDNWRK command was issued, it would show all the call forwarding types, whether they were on this particular DN. As a result, the QDN (and QDNWRK) display would be similar to the following example.

```
CI:
>QDN 7227610
-----------------------------------------------------------

DN:     7227610
TYPE: SINGLE PARTY LINE
SNPA: 613   SIG:  N/A    LNATTIDX: N/A
LINE EQUIPMENT NUMBER:     HOST 02 1 00 15
LINE CLASS CODE:  PSET (WITH DISPLAY)
KEY:  1
CUSTGRP:        MYCUST    SUBGRP: 0  NCOS: 0  RING: Y
ADDONS: NONE   EXTENSION: N
CARDCODE:  6X21AA    GND: N  PADGRP: SPPHN  BNV: NL MNO: Y
PM NODE NUMBER:         94
PM TERMINAL NUMBER:     16
OPTIONS:
CFB F 7224848 A 2 CFD F 7225111 A 3 CFU 7229999 A 1
-----------------------------------------------------------
```

With the advent of CFK, the OPTIONS: display now shows a more exact representation of the DN's call forwarding status. If a particular LEN had CFK on DN 1, CFB on DN 2, and CFD on DN 3, the old QDN display would show the forwarding DNs and activation status for each type. However, since CFK is on the set, the call forwarding data is viewed on an individual DN basis, and is therefore more accurate. As shown in the following example, the output for a QDN of the DN on key 1 shows the correct forwarding DN and activation state for each type: for CFK, the forwarding DN is 722-9999, and the DN is currently active (forwarded). Since CFB and CFD do not have DN 1 in their keylists, their forwarding DNs are shown as $ (no number stored), and their activation state is I (inactive).

EBS Call Forwarding on a per Key Basis (continued)

```
CI:
>QDN 7227610
-----------------------------------------------------------

DN:     7227610
TYPE: SINGLE PARTY LINE
SNPA: 613   SIG:  N/A    LNATTIDX: N/A
LINE EQUIPMENT NUMBER:     HOST 02 1 00 15
LINE CLASS CODE:  PSET (WITH DISPLAY)
KEY:  1
CUSTGRP:        MYCUST    SUBGRP: 0  NCOS: 0  RING: Y
ADDONS: NONE   EXTENSION: N
CARDCODE:  6X21AA    GND: N  PADGRP: SPPHN  BNV: NL MNO: Y
PM NODE NUMBER:         94
PM TERMINAL NUMBER:     16
OPTIONS:
CFB F $ I 2 CFD F $ I 3 CFK 7229999 A 1
-----------------------------------------------------------
```

For a QDN of the DN on key 2, CFB is active. Since CFD and CFK do not have key 2 in their keylists, they show a $ (no number stored) and an I (inactive).

```
CI:
>QDN 7227611
-----------------------------------------------------------

DN:     7227611
TYPE: SINGLE PARTY LINE
SNPA: 613   SIG:  N/A    LNATTIDX: N/A
LINE EQUIPMENT NUMBER:     HOST 02 1 00 15
LINE CLASS CODE:  PSET (WITH DISPLAY)
KEY:  2
CUSTGRP:        MYCUST    SUBGRP: 0  NCOS: 0  RING: Y
ADDONS: NONE   EXTENSION: N
CARDCODE:  6X21AA    GND: N  PADGRP: SPPHN  BNV: NL MNO: Y
PM NODE NUMBER:         94
PM TERMINAL NUMBER:     16
OPTIONS:
CFB F 7224848 A 2 CFD F $ I 3 CFK $ I 1
-----------------------------------------------------------
```

For a QDN of the DN on key 3, CFD is shown as being active. Since CFB and CFK do not have key 3 in their keylists, they show a $ (no number stored) and an I (inactive).

EBS Call Forwarding on a per Key Basis (continued)

```
CI:
>QDN 7227612
-------------------------------------------------------
DN:     7227612
TYPE: SINGLE PARTY LINE S
NPA: 613   SIG:  N/A
LNATTIDX: N/A
LINE EQUIPMENT NUMBER:     HOST 02 1 00 15
LINE CLASS CODE:  PSET (WITH DISPLAY) KEY:  3
CUSTGRP:      MYCUST SUBGRP: 0 NCOS: 0 RING: Y
ADDONS: NONE  EXTENSION: N
CARDCODE:  6X21AA    GND: N PADGRP: SPPHN BNV: NL MNO: Y PM
NODE NUMBER:       94
PM TERMINAL NUMBER:   16
OPTIONS:CFB F $ I 2 CFD F 7225111 A 3 CFK $ I 1
-------------------------------------------------------
```

Note that for sets that do not have CFK datafilled, the display for QDN (and QDNWRK) does not change and is the same as it was in previous BCSs.

Without separate keylists

If the office parameter CFX_SEPARATE_KEYLIST_FEATURE is set to N, all types of call forwarding assigned to the set have the same keylist. The effect this has on the QDN and QDNWRK commands is that for sets with CFK, the display now shows the CFK remote DN and the CFK activation state for that particular DN. Because CFK allows each DN to be forwarded to a different location, the remote DN and activation state could vary from DN to DN on the same set. The display for CFB and CFD remains as it has in the past with the forwarding DNs and activation states displayed in the OPTIONS: list of all DNs in the keylist. Examples follow.

EBS Call Forwarding on a per Key Basis (continued)

Example MAP display of the QDN command Example 1

```
CI:
>QDN 7227610
-------------------------------------------------------
DN:     7227610
TYPE: SINGLE PARTY LINE
SNPA: 613   SIG:  N/A    LNATTIDX: N/A
LINE EQUIPMENT NUMBER:     HOST 02 1 00 15
LINE CLASS CODE:  PSET (WITH DISPLAY)
KEY:  1
CUSTGRP:        MYCUST    SUBGRP: 0  NCOS: 0  RING: Y
ADDONS: NONE   EXTENSION: N
CARDCODE:  6X21AA    GND: N  PADGRP: SPPHN  BNV: NL MNO: Y
PM NODE NUMBER:         94
PM TERMINAL NUMBER:     16
OPTIONS:
CFB F 7224848 A $ CFD F 7225111 A $ CFK 7229999 A $
-------------------------------------------------------
```

Example MAP display of the QDN command Example 2

```
CI:
>QDN 7227611
--------------------------------------------------------
DN:     7227611
TYPE: SINGLE PARTY LINE
SNPA: 613   SIG:  N/A    LNATTIDX: N/A
LINE EQUIPMENT NUMBER:     HOST 02 1 00 15
LINE CLASS CODE:  PSET (WITH DISPLAY)
KEY:  2
CUSTGRP:        MYCUST    SUBGRP: 0  NCOS: 0  RING: Y
ADDONS: NONE   EXTENSION: N
CARDCODE:  6X21AA    GND: N  PADGRP: SPPHN  BNV: NL MNO: Y
PM NODE NUMBER:         94
PM TERMINAL NUMBER:     16
OPTIONS:
CFB F 7224848 A $ CFD F 7225111 A $ CFK 7228888 A $
--------------------------------------------------------
```

Note that if the set does not have CFK, but only has some other type of call forwarding, the display for QDN (and QDNWRK) does not change and is the same as it was in previous BCSs.

EBS Call Forwarding on a per Key Basis (continued)

QLEN and QLENWRK commands

The QLEN and QLENWRK commands function primarily as they have in previous BCSs. If CFK is assigned to a set, the call forwarding DN and activation state shown for CFK will be for the first DN in the CFK keylist. That is, since CFK could have a different remote DN and state for each DN in the keylist, only the first CFK DN's information is shown for the QLEN command. For more detailed information about a particular DN, use the QDN or QDNWRK commands. In the following example, CFK has a keylist made up of DN keys 1, 2, and 3. CFB has a keylist of DN 2, and CFD has a keylist of DN 3. The QLEN display that follows is accompanied by three QDN displays (one for each DN that has CFK) to demonstrate that each DN's call forwarding data (for CFK) is different, but only the first DN's data is shown in the QLEN display.

Example MAP display of the QLEN command

```
CI:
>QLEN 2 1 0 15
-----------------------------------------------------------
LEN:     HOST 02 1 00 15
TYPE: SINGLE PARTY LINE
SNPA: 613
DIRECTORY NUMBER:     7227610
LINE CLASS CODE:  PSET (WITH DISPLAY)
CUSTGRP:        MYCUST    SUBGRP: 0  NCOS: 0  RING: Y
ADDONS: NONE   EXTENSION: N
CARDCODE:  6X21AA    GND: N  PADGRP: SPPHN  BNV: NL MNO: Y
PM NODE NUMBER:         94
PM TERMINAL NUMBER:     16
OPTIONS:
CFB F 7224848 A 2 CFD F 7225111 A 3 CFK 7229999 A $
   KEY       DN
   ---       --
      1      DN     7227610
      2      DN     7227611
      3      DN     7227612

   KEY     FEATURE
   ---     -------
     1        CFB F                  7224848         A  2
     1        CFD F                  7225111         A  3
     7        CFK                  7229999 A  $
-----------------------------------------------------------
```

EBS Call Forwarding on a per Key Basis (continued)

Example MAP display of the QDN command Example 1

```
CI:
>QDN 7227610
-----------------------------------------------------------
DN:     7227610
TYPE: SINGLE PARTY LINE
SNPA: 613   SIG:  N/A    LNATTIDX: N/A
LINE EQUIPMENT NUMBER:     HOST 02 1 00 15
LINE CLASS CODE:  PSET (WITH DISPLAY)
KEY:  1
CUSTGRP:        MYCUST    SUBGRP: 0  NCOS: 0  RING: Y
ADDONS: NONE   EXTENSION: N
CARDCODE:  6X21AA    GND: N  PADGRP: SPPHN  BNV: NL MNO: Y
PM NODE NUMBER:         94
PM TERMINAL NUMBER:     16
OPTIONS:
CFB F $ I 2 CFD F $ I 3 CFK 7229999 A $
-----------------------------------------------------------
```

Example MAP display of the QDN command Example 2

```
CI:

>QDN 7227611
-----------------------------------------------------------
DN:     7227611
TYPE: SINGLE PARTY LINE
SNPA: 613   SIG:  N/A    LNATTIDX: N/A
LINE EQUIPMENT NUMBER:     HOST 02 1 00 15
LINE CLASS CODE:  PSET (WITH DISPLAY)
KEY:  2
CUSTGRP:        MYCUST    SUBGRP: 0  NCOS: 0  RING: Y
ADDONS: NONE   EXTENSION: N
CARDCODE:  6X21AA    GND: N  PADGRP: SPPHN  BNV: NL MNO: Y
PM NODE NUMBER:         94
PM TERMINAL NUMBER:     16
OPTIONS:
CFB F 7224848 A 2 CFD F $ I 3 CFK $ I $
-----------------------------------------------------------
```

EBS Call Forwarding on a per Key Basis (continued)

Example MAP display of the QDN command Example 3

```
CI:
>QDN 7227612
------------------------------------------------------------
DN:     7227612
TYPE: SINGLE PARTY LINE
SNPA: 613   SIG:  N/A    LNATTIDX: N/A
LINE EQUIPMENT NUMBER:     HOST 02 1 00 15
LINE CLASS CODE:  PSET (WITH DISPLAY)
KEY:  3
CUSTGRP:        MYCUST    SUBGRP: 0  NCOS: 0  RING: Y
ADDONS: NONE   EXTENSION: N
CARDCODE:  6X21AA    GND: N  PADGRP: SPPHN  BNV: NL MNO: Y
PM NODE NUMBER:         94
PM TERMINAL NUMBER:     16
OPTIONS:
CFB F $ I 2 CFD F 7225111 A 3 CFK 7223333 I $
------------------------------------------------------------
```

Translations table flow

The EBS Call Forwarding on a per Key Basis translations process is shown in the flowchart in the following figure. The flowchart and data show the tables datafilled when the feature is assigned to a key or through an access code.

Table KSETLINE (Business Set and Data Unit Line Assignment) defines the business set and data unit numbers supported by the switch and the hardware options assigned to each. This table is datafilled when the line is assigned in SERVORD.

> ***Note:*** EBS Call Forwarding on a per Key Basis requires that Table KSETLINE be datafilled through SERVORD prior to the feature CFK assignment in Table KSETFEAT.

Table KSETFEAT (Business Set and Data Unit Feature) lists the line features assigned to the MBSs listed in Table KSETLINE. One entry is required for each feature assigned to an MBS line. This table is datafilled when feature CFK assignment is made through SERVORD.

Table CUSTHEAD (Customer Group Head) defines the group options or system features that are available to the customer group.

> ***Note:*** EBS Call Forwarding on a per Key Basis requires that Table CUSTHEAD be datafilled to identify the name of the customer translator

EBS Call Forwarding on a per Key Basis (continued)

that translates all access codes with a numeric leading digit of 0 to 9. The translators define the end user's dialing plan and are actually entered in Table IBNXLA (IBN Translation).

Table NCOS (Network Class of Service) defines the dialing plans or dialing restrictions available to a customer group. A customer group can have a maximum of 512 NCOSs.

Note: EBS Call Forwarding on a per Key Basis requires that Table NCOS be datafilled to identify the translator and digit collection option (XLAS). This option allows a different dialing plan for certain telephones whenever the customer group dialing plan is inappropriate.

Table IBNXLA (IBN Translation) stores the digits of the MDC access codes and the options or features to which they belong.

Table XLANAME (List of Translator Names) defines the names of the translators specified in Table IBNXLA.

Table CFX (Call Forwarding) formats and displays call forwarding information to the end user on the basis of individual line equipment numbers (LEN) and keys. For 500/2500 sets, the key is always 0. Table CFX indicates whether the call forwarding feature on a line is active or inactive and specifies the DN to which it is forwarding.

EBS Call Forwarding on a per Key Basis (continued)

Table flow for EBS Call Forwarding on a per Key Basis

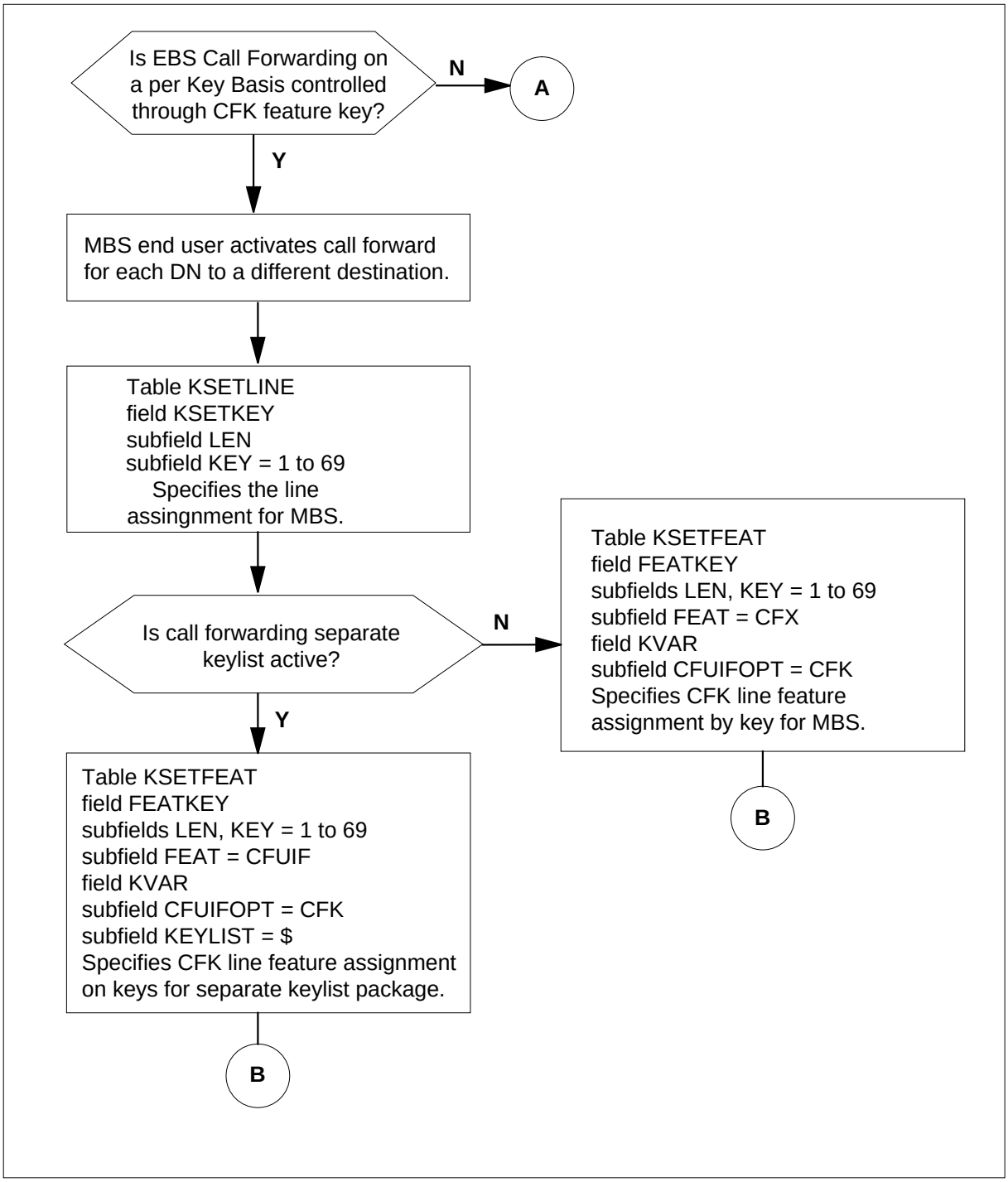

EBS Call Forwarding on a per Key Basis (continued)

Table flow for EBS Call Forwarding on a per Key Basis (continued)

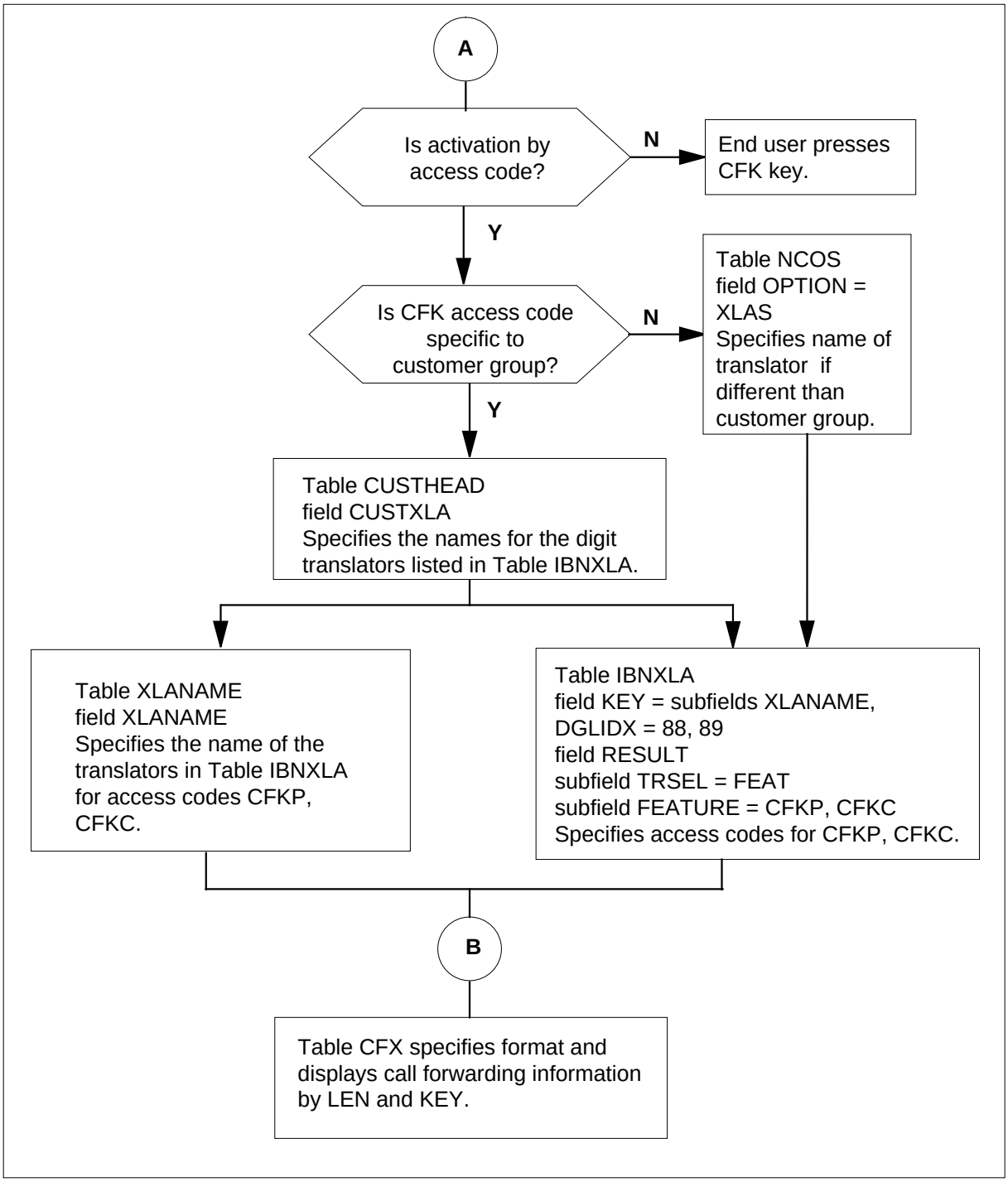

EBS Call Forwarding on a per Key Basis (continued)

The following table lists the datafill content used in the flowchart.

Datafill example for EBS Call Forwarding on a per Key Basis

Datafill table	Example data
CFX activation code	88
CFX deactivation code	88
LEN of end user	HOST 02 01 12 05
CUSTHEAD	MDCGRP1 CXLA DGCOL1 NIL $
NCOS	MDCGRP1 1 MDCNC1 0 0 $
XLANAME	CXLA $ 9
IBNXLA	CXLA 88 FEAT N Y N CFKPCXLA 89 FEAT N Y N CFKC
KSETFEAT	02 01 12 05 4 CFX CFX CFK N N $ $
CFX	HOST 02 01 12 05 2 N N A 54706

Limitations and restrictions

The following limitations and restrictions apply to EBS Call Forwarding on a per Key Basis :

- If CFK is activated through a CFK feature key, the key must have a lamp. No other features are allowed on the key.
- Attendant console activation of call forwarding is not supported for CFK. That is, the attendant cannot use the Call Forward Station (CFS) key to activate CFK to another station.
- CFK cannot be assigned to the following sets:
  - — standard 500/2500 sets
  - — data units
  - — multiple asynchronous data option (MADO) sets
  - — Aries A2006 sets
  - — Aries data unit option (ADATA1) sets
  - — ISDN sets

- For M3000 and M2317 sets, CFK can only be activated by code access, not by a CFK key.
- Group Intercom (GIC) keys and Automatic Call Distribution (ACD) keys cannot be forwarded by CFK.

Interactions

The following features interact with EBS Call Forwarding on a per Key Basis:

- Call Forward Simultaneous/Screening Options: CFK supports the Call Forward Simultaneous/Screening options (field SIMULT set to Y in Table KSETFEAT).
- Call Forwarding (CFW): CFK does not change any of the other CFW types. CFK is not compatible with the following CFW options and cannot be assigned to a business set that has any of these options:
  - CFU
  - CFI
  - CFF
  - CFRA through DISA
- CFK can be assigned to a business set that also has Call Forward Busy (CFB), Call Forward Don't Answer (CFD), or both. CFK takes precedence over any other type of CFW that is active on the set, such as CFB or CFD.
- Customer group options for CFW that are assigned in Table CUSTSTN also apply to CFK. However, CFK does not support the Call Forward Validation (CFWVAL) option in Table CUSTSTN.
- Display Sets: If the business set has a display, the following rules apply:
  - When a single DN is being activated for CFK, and no remote DN is currently in memory, a row of dashes is displayed. If there is a remote DN saved in memory from a previous activation, that DN is displayed. When a new remote DN is entered, the digits are echoed on the display as they are entered.
  - When CFK is being activated for all DNs simultaneously, the remote DN is not displayed.
  - When CFK is being deactivated by code access, the canceled remote DN is displayed along with the deactivation access code.
- Multiple Appearance Directory Number (MADN): CFK cannot be activated by a MADN secondary group member. If CFK is assigned to a business set that has secondary MADN group members, those DNs cannot use CFK. Only the primary member of a MADN group can activate and

EBS Call Forwarding on a per Key Basis (continued)

deactivate CFK for the MADN. The primary member activates and deactivates CFK for the whole MADN group.

- When Call Forward Programming is accessed via the CF feature key on a business set, and if the user is attempting to program to an Equal Access carrier, the PIC assigned to any DN key on the business set will not be used. The feature key does not have access to any DN information during the programming attempt. Users must either dial the PIC access code with programmed digits or use a Customer Group PIC via translations, such as table IBNXLA NET selector with an EA option. An office-wide parameter in table OFCENG, DEFAULT_CARRIER_OR_TREAT can also be used to provide a PIC when none is dialed during the CF programming attempt.

Activation/deactivation by the end user

The following paragraphs describe the activation/deactivation by the end user between EBS Call Forwarding on a per Key Basis and other functionalities.

This procedure explains how to use CFK when CFK is controlled by a CFK feature key on the business set.

Activation/deactivation of EBS Call Forwarding on a per Key Basis by the end user

The end user can perform the following actions using the CFK key:

- activate—enter a remote DN and forward to that DN
- deactivate—stop forwarding but save the remote DN in memory
- deactivate and delete—stop forwarding and erase the remote DN from memory
- reactivate—forward to the remote DN saved in memory (the end user does not need to reenter the remote DN)

CFK can be activated for one DN at a time or for all DNs simultaneously. Activating CFK one DN at a time allows the end user to forward each DN to a

EBS Call Forwarding on a per Key Basis (continued)

different remote DN. The complete procedures are given in detail in the following tables.

Activation/deactivation usage of CFK

CFK activity	Steps
Activate one DN	CFK + DN + digits + CFK
Activate all DNs	CFK + digits + CFK
Deactivate one DN	CFK + DN + * + CFK
Deactivate all DNs	CFK + * + CFK
Deactivate and delete one DN	CFK + DN + # + CFK
Deactivate and delete all DNs	CFK + # + CFK
Reactivate previous DNs	CFK + CFK
Note: In the “Steps" column, CFK refers to the CFK key, DN refers to the DN key to be forwarded or unforwarded, and digits refers to the remote DN (up to 24 digits).	

Activation of EBS Call Forwarding on a per Key Basis by the end user (single DN)

1. Press the CFK key.

   Response:The CFK lamp flashes.
2. Press the DN key.
3. Dial the remote DN.
4. Press the CFK key.

   Response:The CFK lamp is on.

   The DN is now forwarded.

EBS Call Forwarding on a per Key Basis (continued)

Activation of EBS Call Forwarding on a per Key Basis by the end user (all DNs)

1. Press the CFK key.

   Response:The CFK lamp flashes.

2. Dial the remote DN.

3. Press the CFK key.

   Response:The CFK lamp is on.

   All DNs that apply to CFK are now forwarded to the same remote DN.

   [hairsp]If some DNs were already forwarded, they are now forwarded to the remote DN dialed in step 2.

Deactivation of EBS Call Forwarding on a per Key Basis by the end user (single DN)

1. Press the CFK key.

   Response:The CFK lamp flashes.

2. Press the DN key.

3. Press the CFK key.

   Response:The CFK lamp is on if other DNs are still forwarded. The CFK lamp is off if no other DNs are forwarded.

   The DN is no longer forwarded. The remote DN is saved in memory.

Deactivation of EBS Call Forwarding on a per Key Basis by the end user (all DNS with CFK activated)

1. Press the CFK key.

   Response:The CFK lamp flashes.

2. Dial * on the keypad.

3. Press the CFK key.

   Response:The CFK lamp is off.

   The DNs are no longer forwarded. The remote DN is saved in memory.

EBS Call Forwarding on a per Key Basis (continued)

Deactivation and deletion of EBS Call Forwarding on a per Key Basis by the end user (single DN)

1. Press the CFK key.

   Response:The CFK lamp flashes.

2. Press the DN key.

3. Dial # on the keypad.

   Response:The remote DN is deleted.

   Press the CFK key.

   Response:The CFK lamp is on if other DNs are still forwarded. The CFK lamp is off if no other DNs are forwarded.

   The DN is no longer forwarded. The remote DN is not saved in memory.

Deactivation and deletion of EBS Call Forwarding on a per Key Basis by the end user (all DNs with CFK activated)

1. Press the CFK key.

   Response:The CFK lamp flashes.

2. Dial # on the keypad.

3. Press the CFK key.

   Response:The CFK lamp is off.

   The DNs are no longer forwarded. The remote DN is not saved in memory.

EBS Call Forwarding on a per Key Basis (continued)

Deactivation and deletion of EBS Call Forwarding on a per Key Basis by the end user (all DNs previously forwarded by CFK)

1. Press the CFK key.

   Response:The CFK lamp flashes.

2. Press the CFK key.

   Response:The CFK lamp is on.

   All DNs that were forwarded the last time are now forwarded [hairsp]again to the same remote DN saved in memory.

   Note 1: If the end user presses the Release key before the CFK key is pressed for the second time, the steps in progress are canceled with no changes effective.

   Note 2: The CFK feature key time-out is 60 s. After activating the CFK key, the end user has 60 s to take the next step or the process is stopped and the end user must start over.

Activation/deactivation using access codes

This section explains how to use CFK when CFK is controlled using dialed access codes. Code access can only be performed for one DN at a time. If the end user wants all DNs forwarded or unforwarded, the steps must be repeated for each DN. Also, each time the end user activates CFK, the end user must enter the remote DN. There is no way to save the remote DN in memory.

Activation of EBS Call Forwarding on a per Key Basis by the end user for a DN

1. Go off-hook and press the DN to be forwarded.

   Response: The end user hears dial tone.

2. Dial the CFK activation code.

   Response: The end user hears special dial tone.

3. Dial the remote DN.

   If the activation is accepted, the end user hears confirmation tone and the DN is forwarded; otherwise, the end user is routed to a treatment.

EBS Call Forwarding on a per Key Basis (continued)

Activation of EBS Call Forwarding on a per Key Basis by the end user for a DN

1. Go off-hook and press the DN to be unforwarded.

   Response: The end user hears dial tone.

2. Dial the CFK cancellation code.

   If the deactivation is accepted, the end user hears a confirmation tone and the DN is unforwarded; otherwise, the end user is routed to a treatment.

Billing

EBS Call Forwarding on a per Key Basis does not affect billing.

Station Message Detail Recording

EBS Call Forwarding on a per Key Basis does not affect Station Message Detail Recording.

Datafilling office parameters

EBS Call Forwarding on a per Key Basis does not affect office parameters.

Datafill sequence

The following table lists the tables that require datafill to implement EBS Call Forwarding on a per Key Basis . The tables are listed in the order in which they are to be datafilled.

Datafill tables required for EBS Call Forwarding on a per Key Basis (Sheet 1 of 2)

Table	Purpose of table
XLANAME	Translator Names. This table stores the default data, including the allowable digilator range, for each translator.
IBNXLA	IBN Translation. This table stores data for the digit translation of calls from an IBN station, attendant console, incoming IBN trunk group, or incoming side of a two-way IBN trunk group.
Note 1: This table is datafilled through SERVORD; therefore, no datafill procedure or example is provided. Refer to “SERVORD" for an example of using SERVORD to datafill this table. ***Note 2:*** Table CFX is a read-only table that is automatically datafilled when the CFK feature is assigned through the ADO (add option) or NEW (establish service) SERVORD commands. Therefore, no datafill procedure for Table CFX is provided.	

EBS Call Forwarding on a per Key Basis (continued)

Datafill tables required for EBS Call Forwarding on a per Key Basis (Sheet 2 of 2)

Table	Purpose of table
KSETFEAT (Note 1)	Business Set and Data-Unit Feature. This table lists the line features that are assigned to the bunisess sets and data units (DU) listed in table KSETLINE, and also the Meridian digital telephone sets and DUs listed in table IVDINV.
CFX (Note 2)	N/A

Note 1: This table is datafilled through SERVORD; therefore, no datafill procedure or example is provided. Refer to “SERVORD" for an example of using SERVORD to datafill this table.

Note 2: Table CFX is a read-only table that is automatically datafilled when the CFK feature is assigned through the ADO (add option) or NEW (establish service) SERVORD commands. Therefore, no datafill procedure for Table CFX is provided.

Datafilling table XLANAME

Table XLANAME (List of Translator Names) contains data that controls the addition and deletion of translators in Table IBNXLA. Each translator is assigned an alphanumeric one- to eight-character default value.

Table XLANAME is changed in exactly the same way as Table IBNXLA. Table XLANAME is used to define default translation information for every translator name.

The following table shows the datafill specific to EBS Call Forwarding on a per Key Basis for table XLANAME. Only those fields that apply directly to EBS Call Forwarding on a per Key Basis are shown. For a description of the other fields, refer to the data schema section of this document.

Datafilling table XLANAME

Field	Subfield or refinement	Entry	Explanation and action
XLANAME		alphanumeric	Translator Name. This field lists the name of the end user, feature, or preliminary translator. Enter 1 to 8 alphanumeric characters.
DEFAULT		character	Default Data. This field consists of the translations refinement subfields. Enter $ if there is no default data.

Datafill example for table XLANAME

The following example shows sample datafill for table XLANAME.

MAP display example for table XLANAME

```
XLANAME                                DEFAULT
-----------------------------------------------
 CXLA                                     $
```

Datafilling table IBNXLA

Table IBNXLA (IBN Translation) stores the digits of the MDC access codes and the options or features to which they belong. For business sets that are to activate and cancel CFK by dialed access codes, Table IBNXLA must be datafilled to define the codes.

The CFK feature can be controlled either through a CFK feature key (Table KSETFEAT) or by dialed access codes. If CFK is to be controlled by access codes, Table IBNXLA must be datafilled with CFK activation and cancellation codes. This feature allows CFK codes to be defined using the FEAT selector. Field FEATURE is changed to allow the values CFKP and CFKC. CFKP is assigned to the code used to activate or program CFK. CFKC is assigned to the code used to cancel CFK.

The following table shows the datafill specific to EBS Call Forwarding on a per Key Basis for table IBNXLA. Only those fields that apply directly to EBS Call Forwarding on a per Key Basis are shown. For a description of the other fields, refer to the data schema section of this document.

Datafilling table IBNXLA (Sheet 1 of 2)

Field	Subfield or refinement	Entry	Explanation and action
KEY		see subfields	Key. This field consists of subfields XLANAME and DGLIDX.
	XLANAME	alphanumeric	Translator Name. This subfield specifies the name that is assigned to the translator. Enter the 1- to 8-character name.
	DGLIDX	numeric	Digilator Index. This subfield specifies the access code. Enter the 1- to 18-digit number assigned as the access code.
RESULT		see subfield	Result. This field consists of subfield TRSEL.

EBS Call Forwarding on a per Key Basis (continued)

Datafilling table IBNXLA (Sheet 2 of 2)

Field	Subfield or refinement	Entry	Explanation and action
	TRSEL	FEAT	Translations Selector. This subfield specifies the translations selector to be used. Enter FEAT.
If TRSEL is set to FEAT, subfields ACR, SMDR, and FEATURE require datafill.			
	ACR	Y or N	Account Code Entry. This subfield specifies whether an account code is required. Enter Y or N.
	SMDR	Y or N	Station Message Detail Recording. This subfield specifies whether SMDR is required. Enter Y or N.
	FEATURE	CFK	Feature. This subfield specifies the feature assigned to a line. Enter CFK.

Datafill example for table IBNXLA

The following example shows sample datafill for Table IBNXLA. In the example, the activation code is 88, and the cancellation code is 89 for the translator CXLA.

```
                    KEY                 RESULT
-------------------------------------------------------------
          CXLA      88
                                FEAT     N    Y    N      CFKP
          CXLA      89
                                FEAT     N    Y    N      CFKC
```

Datafilling table CFX

Table CFX (Call Forwarding) displays call forwarding information about each business set line.

Table CFX is a read-only table. Table CFX is not datafilled by the operating company, but is automatically changed as end users program and cancel CFK numbers. After Table KSETFEAT is datafilled, Table CFX is automatically datafilled as well.

The key field in Table CFX is the LEN plus the key number. Other fields in the table indicate what type of call forwarding is assigned to the line and

EBS Call Forwarding on a per Key Basis (continued)

whether call forwarding is currently activated on the line. If call forwarding is currently activated, the remote DN is also shown. Prior to this feature, Table CFX displayed this information on an individual LEN basis; with this feature, information is now displayed on an individual LEN + key basis.

The main purpose of this table is to preserve the forwarded DNs and states for dump and restore.

Datafill example for table CFX

The following examples show sample datafill for Table CFX. The key into the table is LEN + key. In the following example, the cursor is positioned on key 2 of the LEN HOST 02 0 00 08.

Table CFX is read in the following way:

- The Y position indicates that one of the types of CFU, CFI, CFF, or CFK is assigned to the key. An N would indicate either CFB or CFD.
- The N indicates that there is no CFB or CFD assigned to the set along with the CFU, CFI, CFF, or CFK.
- The I position indicates that the DN on that key is currently inactive for call forwarding. An A would indicate that call forwarding is active.
- The $ field contains the number to which the DN is (or was) forwarded. In the above example, the key is inactive with no forwarding number stored.

For example, consider a business set that has CFK assigned and has DN appearances on keys 1, 2, and 3.

```
  CFXLEN                                          CFUIFVAR
-------------------------------------------------------------

  HOST 02 0 00 08  1        Y N        I              $
  HOST 02 0 00 08  2        Y N        I              $
  HOST 02 0 00 08  3        Y N        I              $
```

For LEN 2 0 00 08, keys 1, 2, and 3 can be forwarded on an individual basis, and all the corresponding DNs are inactive with no forwarding number.

If the end user programs DNs 2 and 3 to different numbers, displaying Table CFX shows the following entries:

EBS Call Forwarding on a per Key Basis (continued)

```
  CFXLEN                                          CFUIFVAR
-------------------------------------------------------------

  HOST 02 0 00 08  1          Y N        I             $
  HOST 02 0 00 08  2          Y N        A          7630
  HOST 02 0 00 08  3          Y N        A      97227621
```

Translation verification tools

The following example shows the output from TRAVER when it is used to verify EBS Call Forwarding on a per Key Basis .

DN 2 is now in the inactive state, and the forwarded DN is deleted. While DN 3 shows that the remote DN is 97227621, the inactive state indicates that DN 3 is no longer forwarded. If DN 3 is reprogrammed again, the state will go to active, and the newly assigned remote DN will appear in the DN field. Alternatively, DN 3 can be reactivated, in which case the state will change back to active, and the remote DN will stay the same.

SERVORD

EBS Call Forwarding on a per Key Basis creates line option CFK. Option CFK assigns the CFK feature to a business set. The following commands are used to administer option CFK:

- ADO (add option)
- DEO (delete option)
- NEW (establish service)

The call forwarding line options CFU, CFI, CFF, and CFR are not compatible with option CFK. However, CFB and CFD (and their variants) can be assigned to a set with option CFK.

The following table shows the SERVORD prompts used to assign EBS Call Forwarding on a per Key Basis to an existing line.

SERVORD limitations and restrictions

EBS Call Forwarding on a per Key Basis has no SERVORD limitations and restrictions.

EBS Call Forwarding on a per Key Basis (continued)

SERVORD prompts

The following table shows the SERVORD prompts used to change EBS Call Forwarding on a per Key Basis .

SERVORD prompts for EBS Call Forwarding on a per Key Basis

Prompt	Valid input	Explanation
DN_OR_LEN	7-digit DN or LEN	Specifies the 7-digit DN or LEN of the line to be changed. Enter the DN or LEN.
OPTKEY	1 to 69	Indicates the key on an MBS to which an option is assigned. Enter a value from 1 to 69.
OPTION	CFK	Indicates the name of the option. Enter CFK.
KEYLIST	1 to 69	Specifies the key numbers of the DNs to which an option applies. Enter a value from 1 to 69.
Note: Table KSETFEAT is automatically datafilled when EBS Call Forwarding on a per Key Basis is assigned using SERVORD.		

SERVORD example for adding EBS Call Forwarding on a per Key Basis

For a business set that is to activate CFK using a key, CFK is assigned to its own key on the set. The ADO command can be used to assign CFK to an existing business set.

The following service order example shows how EBS Call Forwarding on a per Key Basis is added to an existing line using the ADO command. In the example, CFK is assigned to key 4. The KEYLIST entry specifies which DN keys can be forwarded using CFK. The keylist specifies that CFK can be used against DN keys 1 and 2.

The following SERVORD example shows how EBS Call Forwarding on a per Key Basis is added using the ADO command.

EBS Call Forwarding on a per Key Basis (continued)

SERVORD example for EBS Call Forwarding on a per Key Basis in prompt mode

```
>
SO:
> ADO
SONUMBER: NOW 88 1 1 PM
>
DN_OR_LEN:
> 3 0 1 9
OPTKEY:
> 4
OPTION:
> CFK
KEYLIST:
> 1
KEYLIST:
> 2
KEYLIST:
> $
OPTKEY:
> $

>
```

SERVORD example for EBS Call Forwarding on a per Key Basis in no-prompt mode

```
> ADO $ 3 0 1 9 4 CFK 1 2 $ $
```

The following service order example shows how EBS Call Forwarding on a per Key Basis is added to an existing line using the ADO command. In the example, CFK is added to key 3 on a business set. Since a dollar sign ($) is entered for the KEYLIST, all valid DNs on the set can be forwarded by CFK.

EBS Call Forwarding on a per Key Basis (end)

SERVORD example for EBS Call Forwarding on a per Key Basis in prompt mode

```
>
SO:
> ADO
SONUMBER: NOW 88 1 1 PM
>
DN_OR_LEN:
>3 0 1 8
OPTKEY:
> 3
OPTION:
> CFK
KEYLIST:
> $
OPTKEY:
> $

>

>

>
```

SERVORD example for EBS Call Forwarding on a per Key Basis in no-prompt mode

```
>ADO $ 3 0 1 8 3 CFK $ $
```

Operational measurements

Operational measurement (OM) groups OFZ, OTS, and TFCANA are pegged when CFK is activated. CFK is a type of call forwarding closely related to CFU (Call Forward Universal), and as such, pegs any OMs that are pegged for CFU.

Log reports

Log reports CFW101, CFW103, CFW104 and CFW105 are changed with CFK. EBS Call Forwarding on a per Key Basis makes a minor format change to the call forwarding log reports as a result of the new two-part key in Table CFX. These log reports are produced if call forwarding was activated or deactivated and the journal file was inactive. When the journal file is inactive, changes are not recorded in Table CFX.

Refer to *Log Report Reference Manual* for a complete description of these log reports.

Enhanced MADN Call Control

Ordering codes

Functional group ordering code: MDC00008

Functionality ordering code: not applicable

Release applicability

BCS26 and up

Prerequisites

To operate, Enhanced MADN Call Control has the following prerequisites:

- BAS Generic, BAS00003
- MDC MBS Minimum, MDC00007
- MDC Minimum, MDC00001

Description

Enhanced MADN Call Control replaces features AL0207, Privacy Release Conference Control, and BR0837, Optional Privacy on MADNs. This feature allows for the same capabilities as single bridged arrangement (SBA) and multiple bridged arrangement (MBA), but makes it possible to customize a multiple appearance directory number (MADN) to the end user's needs through Table MDNGRP (Multiple Appearance Directory Number Group). This feature applies to standard 500/2500 sets and to Meridian business sets (MBS).

Operation

A MADN is a directory number (DN) that is associated with several line appearances. That is, a MADN appears on several stations (for example, a manager's station and a secretary's station). This group of line appearances is known as a MADN group, and each individual line appearance is known as a MADN group member. Any MADN group member can originate a call. When there is an incoming call to the MADN, all line appearances are alerted, and any member can answer the call. When a MADN group member is involved in a call on the MADN, that member is said to be active.

All MADN calls are initially made up of one MADN group member and one external party. The term *external party* refers to the party who is not part of the MADN group.

Enhanced MADN Call Control (continued)

Up to and including BCS25, the available MADN types were as follows:

- Multiple call arrangement (MCA), provided in feature BV0954, allows each group member to be simultaneously active on a call with a different external party.
- Single call arrangement (SCA), provided in feature BV0954, allows one call to be active on the MADN at a time.

  An SCA call is normally private, meaning that other members of the group cannot bridge into the call. The privacy release (PRL) option can be repeatedly invoked by the active member to allow some or all of the other MADN group members to bridge into the conversation and form a conference. A conference can contain one external party and a maximum of 29 MADN group members.
- Single bridged arrangement (SBA), provided in feature BR0837, allows one call to be active on the MADN at a time.

  A call to an SBA MADN is normally nonprivate, meaning that another member can bridge into the call without permission. The PRL option can be invoked by an active member to prevent another member from bridging into the call. SBA allows a maximum of two MADN group members to be involved in a call with an external party.
- Multiple bridged arrangement (MBA), provided in feature AL0207, allows one call to be active on the MADN at a time.

  An MBA call is normally nonprivate. The PRL option can be invoked by any active member to prevent other group members from bridging into the call. MBA allows a maximum of 29 MADN group members to be involved in a call with an external party.
- Extension bridging (EXB) allows one call to be active on the MADN at a time. All members have equal call forwarding and speed calling programming privileges. EXB MADNs can be assigned to 500/2500 sets and to Subscriber Services (RES) lines.

  An EXB call is normally nonprivate. The PRL option can be invoked by an active member to prevent another group member from bridging into the call. EXB allows a maximum of two MADN group members to be active on a call with an external party.

The SBA and MBA types are basically variations of the SCA type. In other words, SBA and MBA lines can be thought of as SCA lines with special attributes.

Background

The Enhanced MADN Call Control feature removes the SBA and MBA types of MADNs and creates Table MDNGRP. This table contains a list of attributes

Enhanced MADN Call Control (continued)

for every MADN group in the switch and offers greater potential for customizing MADN lines. The capabilities that were previously offered by SBA and MBA can still be achieved by altering the attributes of an SCA MADN in Table MDNGRP through the Service Order System (SERVORD). The feature acronym in SERVORD for MADN is MDN (Multiple Appearance Directory Number). The SBA and MBA types are no longer needed and are removed from Tables KSETLINE (Business Set and Data Unit Line Assignment) and IBNLINES (IBN Line Assignment). The MCA and EXB types are not affected by this feature. The remainder of this feature description applies to SCA MADNs only.

SCA attributes

An SCA MADN group can be customized by datafilling the following attributes in Table MDNGRP:

- Denial treatment type (DENTRMT) defines the type of audible treatment that should be given to a member when the member is unsuccessful in accessing his or her MADN line, or when bridging is not allowed or not possible.

The treatment types are as follows:

- SILENCE—silence for an indefinite period of time
- TONE—reorder tone for a period of 5 s
- Bridging allowed (BRIDGING) specifies whether or not the MADN group has bridging capability; that is, whether or not other members can conference into a call. This attribute can be set to Y or N.
- Maximum conference bridge size (CONFSIZE) can be set to a value from 3 to 30, and specifies the maximum conference bridge size in terms of parties (including the external party and the member who originally answered the call). For example, a conference bridge size of 6 implies that at most four other members can bridge into the call.

  All SCA lines with bridging capability datafilled with a conference bridge size of 3 can make use of one three-port conference circuit for every call.

  All SCA lines with bridging capability datafilled with a conference bridge size of 4 or higher can make use of at least one six-port conference circuit for every call.
- Bridge tone required (BRGTONE) indicates whether or not a tone should be heard by the external party and all active MADN group members whenever a new member bridges into the call. This attribute can be set to Y or N.

Enhanced MADN Call Control (continued)

- Initial privacy status (INITSTAT) indicates whether a call is normally private or not. The initial privacy status values are as follows:
  - — PRIVATE—This setting specifies that all SCA calls are initially private. Bridging cannot occur unless an active MADN group member explicitly releases privacy on the call by using the privacy release (PRL) option.
  - — NONPRIVATE—This setting specifies that all SCA calls are initially not private. Bridging can occur any time unless an active MADN group member explicitly enforces privacy on the call by using the PRV option.

  Note: It is common for an MBS to have several different MADN SCA lines. It is recommended that each MADN on an MBS have the same initial privacy status setting so as not to confuse the business set end user.

- Privacy release mode (PRLMODE) is only applicable to groups whose initial privacy status is PRIVATE. It defines how privacy release will operate. The privacy release mode values are as follows:
  - — MANUAL—This mode allows only one member to bridge into a call after privacy has been released. Privacy is immediately reinstated as soon as a member bridges into the call. Hence, privacy must be manually released every time a new member is to be added to the call.
  - — AUTO—This mode allows any number of members to bridge into a call after privacy has been released. Hence, privacy need only be released once when a conference bridge of arbitrary size is being established. Privacy is restored only if an end user deactivates the privacy release option.

Notes on privacy release operation

Privacy release (PRL) is an option that applies to all SCA lines that have bridging capability and an initial privacy status of PRIVATE.

Business set end users can either have a dedicated PRL option key or can activate and cancel PRL by dialed access codes. 500/2500 set end users must access and cancel PRL by dialing access codes.

For business sets with a dedicated PRL option key, the PRL key acts as a toggle that alternately activates and cancels privacy release. The PRL key is datafilled in Table KSETFEAT (Business Set and Data Unit Feature). The PRL option does not have a lamp.

Enhanced MADN Call Control (continued)

For business sets and 500/2500 sets that use feature access codes to control privacy release, there is one access code for activating privacy release and another code for canceling privacy release. These codes are datafilled in Table IBNXLA (IBN Translation).In auto mode, MADN SCA bridging allows the controller of the bridge to release privacy one time and allow members to bridge on the conference. (In manual mode, the controller must activate privacy release each time a member wants to bridge on the conference.) However, when the conference has reached its maximum, privacy release is automatically cancelled (and is not reinstated when members leave the conference).

Notes on privacy operation

Privacy (PRV) is an option that applies to all SCA lines with bridging capability and an initial privacy status of NONPRIVATE.

Business set end users can either have a dedicated PRV option key or can activate and cancel PRV by a dialed access code. 500/2500 set end users must dial an access code to activate and cancel PRV.

For business sets with a dedicated PRV option key, the PRV key acts as a toggle that alternately activates and cancels privacy. The PRV key is datafilled in Table KSETFEAT. The PRV option does not have a lamp.

For business sets and 500/2500 sets that use a dialed access code for controlling privacy, there is one access code that alternately activates and deactivates privacy. This code is datafilled in Table IBNXLA.

Emulating traditional SCA, SBA, and MBA capabilities

The following table shows the attribute settings that are functionally identical to the traditional SCA, SBA, and MBA types that were in use until BCS26. The traditional attribute settings for SCA are the defaults and are automatically datafilled in Table MDNGRP when an SCA MADN group is created.

Attribute settings to emulate traditional SCA, SBA, and MBA capabilities (Sheet 1 of 2)

Attribute	SCA	SBA	MBA
Denial treatment type	SILENCE	TONE	TONE
Bridging allowed	Y	Y	Y
Maximum conference bridge size	30	3	30
Bridge tone required	N	Y	Y

Enhanced MADN Call Control (continued)

Attribute settings to emulate traditional SCA, SBA, and MBA capabilities (Sheet 2 of 2)

Attribute	SCA	SBA	MBA
Initial privacy status	PRIVATE	NONPRIVATE	NONPRIVATE
Privacy release mode	MANUAL		

MADN SCA bridging

Bridging is a process whereby a MADN group member conferences into an existing call. The call must be nonprivate and in a stable talking state at the time of bridging. The following figure shows a basic bridging scenario.

Enhanced MADN Call Control (continued)

Bridging example of a nonprivate call

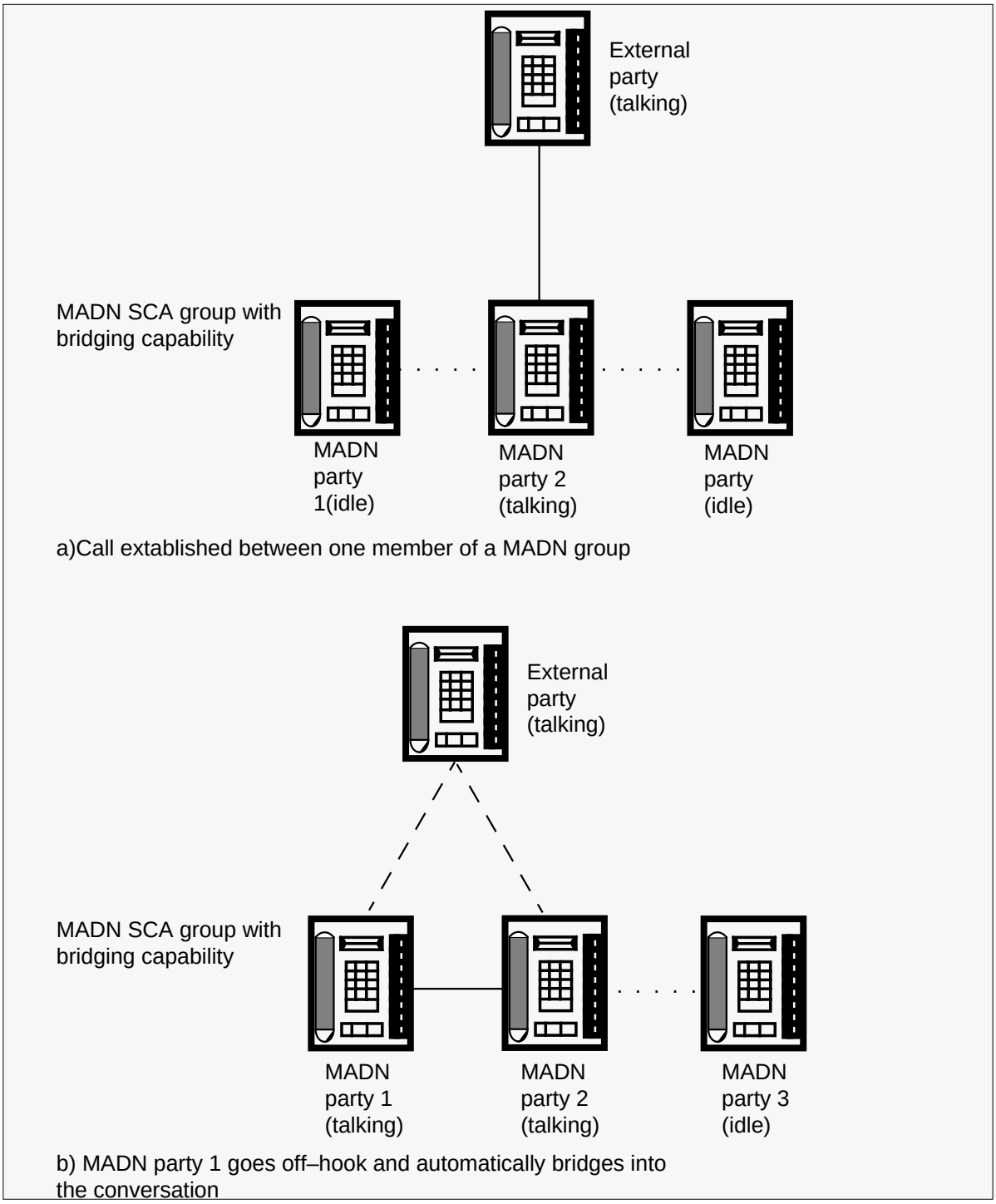

Enhanced MADN Call Control (continued)

Business set operation during bridging

When an unanswered call is incoming to an SCA MADN, each idle MADN group member's lamp flashes at a rate of 60 impulses per minute (ipm).

When an idle member presses the MADN key, the call is answered, and each member's lamp changes to the solid state. Hence, there is no difference between the MADN lamp states of the active and idle members. The call is now said to be in a stable talking state.

If no idle member has yet bridged into the call, the active member, having full control of the call, can activate any feature that is compatible with SCA. For example, the active member can activate MADN hold by pressing the HOLD key or by pressing another DN key (autohold). Each member's lamp begins to wink (flash at a rate of 120 ipm). Any member can retrieve the call by pressing the MADN key. The call returns to a stable talking state and each member's lamp returns to the solid state.

Refer to “Interactions" in this feature description for a description of compatible and incompatible features.

When an idle member goes off-hook to originate a call, every member's lamp changes to the solid state.

The bridging process

Bridging is not possible unless the privacy status of the call is nonprivate at the time of bridging. If the call is private, the following preliminary steps are required before bridging can take place:

- For SCA groups whose initial privacy status is PRIVATE, an active member must invoke the privacy release (PRL) option to release privacy on the call.
- For SCA groups whose initial privacy status is NONPRIVATE, but who currently have privacy in effect, the PRL option must be canceled.

Any idle member can attempt to bridge into an active call by pressing the MADN key. If bridging is not allowed, the idle member is given denial treatment as specified in Table MDNGRP. If the bridging attempt is successful, the active parties receive a warning tone or no warning tone (depending on the datafill in Table MDNGRP), and a multiparty conference

Enhanced MADN Call Control (continued)

bridge is established. The resulting lamp state of each member depends on group datafill:

- If the initial privacy status is PRIVATE and the privacy release mode is MANUAL, each member's lamp ceases to wink and returns to the solid state.
- If the initial privacy status is PRIVATE and the privacy release mode is AUTO, each member's lamp continues to wink.
- If the initial privacy status is NONPRIVATE, each member's lamp remains in the solid state.

The only confirmation the bridging member receives is a voice connection.

Bridging rules

An idle member who attempts to bridge into a call receives denial treatment and is not allowed to bridge if any of the following conditions apply:

- no conferencing circuits are available
- the call is private
- the call is not in a stable talking state (for example, the active member is in a dialing or ringing state)
- the current number of conferees is at the limit datafilled in Table MDNGRP
- the external party has left the call
- an incompatible feature is active on the external party (see “Feature interactions" in this feature description)

> ***Note:*** Denial treatment is datafilled in Table MDNGRP as either silence or tone.

Modifying the privacy status of a call

The following describes how to modify the privacy status of a call.

- Activating privacy release (PRL). The privacy release (PRL) option is valid only for MADN SCA groups whose initial privacy status is PRIVATE.

If the PRL option is currently not active and the current conference bridge size has not reached its limit, any active member can activate the PRL option by one of the following methods:

- pressing the PRL key on the MBS (if it has a PRL key)
- flashing and dialing the PRL activation code

Enhanced MADN Call Control (continued)

As a result of a PRL activation, each member's MADN lamp begins to wink. Bridging is now permitted.

PRL activation attempts are not permitted after the conference bridge has reached its maximum size or after the external party has left the call. Audible negative acknowledgment (NACK) treatment is provided under these circumstances.

The member who successfully activates the PRL option becomes the PRL controller. Only the PRL controller can cancel PRL.

Activating privacy release. The PRL option is valid only for MADN SCA groups whose initial privacy status is NONPRIVATE.

If the PRL option is currently not active, any active member can activate PRL by one of the following methods:

- pressing the PRL key on the MBS
- flashing and dialing the PRL access code

  The member who activates the PRL option hears a confirmation tone, as there is no lamp associated with the PRL key. This member is now the PRL controller. Each member's MADN lamp remains in the solid state. Bridging is no longer permitted.

  PRL activation attempts are not allowed after the external party has left the call. Audible treatment (NACK) is provided in this circumstance.

With both PRIVATE and NONPRIVATE release, the call must be in a stable talking state before either option can be activated. Activation is possible when most MDC features are active. For example, the active member who is on the second leg of a three-way call can activate PRV or PRL.

PRIVATE and NONPRIVATE release can also be activated after bridging has occurred. In situations where the meaning of a flash is ambiguous, PRV or PRL activation by means of an access code is not possible. With three-way calling, for example, if the active member is the controller of the three-way call, flashing has the effect of conferencing the first and second legs of the three-way call. Only a PRV or PRL option key can be used to activate PRV or PRL in this particular situation.

Illegal key activation attempts are ignored. Audible treatment is provided for illegal access code activation attempts.

Enhanced MADN Call Control (continued)

Restoring the initial privacy status of a call

The following describes how to restore the initial privacy status of a call.

- Canceling privacy release (PRL). Privacy release only applies to SCA MADN groups with an initial privacy status of PRIVATE.

The member who activated PRL is the PRL controller. Only the PRL controller can cancel PRL and thus reinstate the private status of the call. This is accomplished by one of the following methods:

- pressing the PRL key
- Pressing the MADN key associated with the current call
- flashing and dialing the PRL cancellation code
- leaving the call

  The PRL option automatically cancels itself when either of the following conditions applies:

- the first successful bridging attempt occurs and the MADN is assigned a privacy release mode of MANUAL in Table MDNGRP
- the conference bridge size has reached its limit

  As a result of the PRL cancellation, each member's lamp returns to the solid state. Bridging is no longer permitted. Any other active member can assume control of the privacy status of the call.

- Canceling privacy (PRV). Privacy (PRV) applies only to SCA MADN groups with an initial privacy status of NONPRIVATE. The member who activated PRV is the PRV controller. Only the PRV controller can cancel PRV and thus reinstate the nonprivate status of the call. This is accomplished by one of the following methods:

  — pressing the PRV key

  — flashing and dialing the PRV access code

  — leaving the call

  As a result, the PRV controller hears a confirmation tone. Each member's MADN lamp remains in the solid state. Bridging is now permitted. Any other active member can assume control of the privacy status of the call by activating privacy.

PRL and PRV cancellation requires the call to be in a stable talking state. Cancellation is also possible when certain other MDC features are active. For example, PRL or PRV can be canceled by the active member on the second leg of a three-way call. PRL or PRV can also be canceled after bridging has occurred. In situations where the meaning of a flash is ambiguous, PRL or

PRV cancellation by means of an access code is not possible. For example, in three-way calling, if the active member is the controller of the three-way call, flashing has the effect of conferencing the first and second legs of the three-way call. Only an MBS key can be used to cancel PRL or PRV in this particular situation.

Audible treatment (NACK) is provided for illegal access code cancellation attempts.

Leaving a conference bridge

An active member can leave the call at any time by either pressing the RELEASE key or going on-hook.

The lamp state of the member leaving the call does not change unless the entire call is being taken down. The lamp state of every other group member also remains unchanged.

When the external party leaves the conference bridge, the billing process for that call stops, and the remaining active MADN group members are left talking to each other. The remaining members can talk for as long as they wish without being billed. Bridging, however, is no longer possible.

500/2500 set operation

The functionality for 500/2500 sets is the same as for MBSs. However, all references made to keys and lamp states do not apply because 500/2500 sets do not have keys and lamps. In particular, an idle member bridges into a call by going off-hook. The PRL, PRV, MHLA, and MHLC options can only be activated and deactivated by dialed access codes. A confirmation tone is heard for every PRL, PRV, MHLA, and MHLC activation.

MADN bridging examples

The following four examples illustrate how the Enhanced MADN Call Control feature can be used.

Example 1—large peer group

Assume the SCA group has the following option setup:

- Denial treatment type—TONE
- Bridging allowed—Y
- Maximum conference bridge size—10
- Bridge tone required—N
- Initial privacy status—NONPRIVATE

Enhanced MADN Call Control (continued)

Suppose the group is made up of 12 doctors. All have MBSs. This particular MADN line is used for remote site consultations.

The scenario is the following:

- An external party calls the MADN group. The lamp of every group member flashes.
- Doctor 1 answers the call. Every member's MADN lamp assumes the solid state.
- Doctors 2 to 9 go off-hook. Each doctor bridges into the call silently. Each member's lamp remains in the solid state. The conference bridge size is now 10 (9 doctors plus the external party).
- Doctor 10 goes off-hook. This doctor receives denial treatment because the conference bridge size is at its limit of 10.

Example 2—boss/secretary/associate arrangement

Assume the SCA group has the following option setup:

- Denial treatment type—TONE
- Bridging allowed—Y
- Maximum conference bridge size—3
- Bridge tone required—Y
- Initial privacy status—NONPRIVATE

The group is made up of the following members:

- Member 1—Boss
- Member 2—Secretary
- Member 3—Associate

In this particular group, the Secretary generally answers the calls first. An initial privacy status of NONPRIVATE makes it easy for the Boss to assume control of a call after the Secretary has answered. Both the Boss and the Associate occasionally make private calls and want to be notified if a member bridges into their conversation; thus, a bridge tone is required.

The scenario is the following:

- An external party calls the MADN group. The lamp of every MBS group member flashes.
- The Secretary answers the call. Every MBS member's lamp assumes the solid state.

Enhanced MADN Call Control (continued)

- The Boss wishes to take control of the call and goes off-hook. The external party and the Secretary hear the bridge tone and are thus informed of the Boss's presence. The conference bridge size is now 3.
- The Associate, who is not aware of the Boss's presence, also tries to assume control of the call by going off-hook. The Associate receives denial treatment because the conference bridge size is at its limit of 3.
- The Boss asks the Secretary to leave the call. The Secretary goes on-hook, and the external party and the Boss remain talking.
- The Associate again tries to bridge into the call by going off-hook. The external party and the Boss hear the bridge tone and are thus informed of the Associate's presence. The conference bridge size is now 3.
- The Boss informs the Associate that his presence is not required; the Associate goes on-hook. The external party and the Boss remain talking.
- The Boss wishes no more interruptions and activates privacy. The Boss hears a confirmation tone. Bridging is no longer allowed.
- The Secretary has some important news for the Boss and goes off-hook. The Secretary receives denial treatment because the call is private.

Example 3—boss and multisecretary arrangement

Assume the SCA group has the following option setup:

- Denial treatment type—TONE
- Bridging allowed—Y
- Maximum conference bridge size—6
- Bridge tone required—N
- Initial privacy status—PRIVATE
- Privacy release mode—MANUAL

The group is made up of four members:

- Member 1—Boss
- Member 2—Secretary 1
- Member 3—Secretary 2
- Member 4—Secretary 3

In this particular group, the Boss insists on having full control over the privacy status of calls. Therefore, the initial privacy status of the MADN is PRIVATE, and the privacy release mode is MANUAL. Furthermore, the Boss objects to

Enhanced MADN Call Control (continued)

bridge tones and prefers to have visual confirmation (by means of lamp states) of successful bridging attempts. Thus, bridge tone required is set to N.

The scenario is the following:

- The Boss calls an external party (a client). Each member's lamp assumes the solid state.
- The client answers the call.
- The Boss would like to have notes taken and thus activates the privacy release (PRL) option to invite a secretary into the call. Each member's lamp begins to wink. Bridging is now allowed.
- Secretary 1 goes off-hook. Each member's lamp returns to the solid state. Bridging is no longer allowed. A conference bridge is now established between the client, the Boss, and this secretary. The conference bridge size is now 3.
- The Boss would like to have the client's files brought to his office. He cannot delegate Secretary 1 to do the job so he activates the PRL option again. Each member's lamp begins to wink.
- Secretaries 2 and 3 both try to bridge into the call simultaneously; they go off-hook. One secretary successfully bridges into the call, and each member's lamp returns to the solid state. The other secretary receives denial treatment because the call has become private again. The conference bridge size is now 4.

Example 4—boss/associate/multisecretary arrangement

Assume the SCA group has the following option setup:

- Denial treatment—TONE
- Bridging allowed—Y
- Conference bridge size—6
- Bridge tone required—N
- Initial privacy status—PRIVATE
- Privacy release mode—AUTO

The group is made up of the following members:

1. member 1—Boss
2. member 2—Associate
3. member 3—Secretary 1 (reports to the Boss)
4. member 4—Secretary 2 (reports to the Boss)

Enhanced MADN Call Control (continued)

5. member 5—Secretary 3 (reports to the Boss)
6. member 6—Secretary 4 (reports to the Associate)

In this particular group, the Boss and the Associate prefer to have full control of the privacy status of calls. However, they do not appreciate having to activate the PRL option for every new member bridging into the call; thus, the privacy release mode is set to AUTO. No bridge tone is necessary because the secretaries are in the habit of identifying themselves when they bridge into a call.

The scenario is the following:

- The Boss calls an external party (a client). Each member's lamp assumes the solid state.
- The client answers the call.
- The Boss would like the Associate to bridge into the conversation. He also wants notes taken and the client's files brought to his office; he activates the privacy release (PRL) option. Each member's lamp begins to wink. Bridging is now allowed.
- Secretary 1 goes off-hook. Each member's lamp continues to wink. Bridging is still allowed. A conference bridge is now established between the client, the Boss and Secretary 1. The conference bridge size is now 3.
- The Associate and Secretary 2 go off-hook. They both join the conversation. Each member's lamp continues to wink as bridging is still allowed. The conference bridge size is now 5.
- Secretary 3 goes off-hook. Secretary 3 joins the conversation. Each member's lamp returns to the solid state. The PRL option has been automatically canceled because the conference bridge size has reached its limit of 6. Bridging is no longer permitted.
- The Associate would also like to have his own secretary send a copy of the client's files to his office. Secretary 3 is not needed and is asked to leave the conversation. This secretary's lamp remains in the solid state. The conference bridge size is now 5.
- The Associate activates the privacy release (PRL) option. Each member's lamp begins to wink.
- Secretary 2 is going to deliver the files to the Boss and goes on-hook. The secretary's lamp continues to wink. The conference bridge size is now 4.
- Secretary 4 goes off-hook. The secretary joins the conversation. Each member's lamp continue to wink because the PRL option is still active. The conference bridge size is now 5.

Enhanced MADN Call Control (continued)

- The Boss attempts to cancel the PRL option. The attempt is ignored because the Associate is the current PRL controller.
- The Associate cancels the PRL option to prevent further bridging. Each member's lamp returns to the solid state. Bridging is no longer allowed.

User interface

The QLEN (query line equipment number) and QDN (query directory number) commands are changed to display the MADN attributes of SCA groups. The QLEN and QDN commands now display the following extra information:

```
MADN SCA INFO - DENIAL_TRMT : TONE   BRIDGING : Y
        CONF_SIZE : 4 BRIDGE_TONE : N INIT_STAT : PRIVATE
         PRL_MODE : MANUAL
```

Note that if the INIT_STAT value of a group is NONPRIVATE, the PRL_MODE information (third line) is not displayed. If the BRIDGING value of a group is N, the CONF_SIZE, BRIDGE_TONE, INIT_STAT, and PRL_MODE information (second and third lines) are not displayed since they are not applicable.

Translations table flow

The Enhanced MADN Call Control translation tables are described in the following list:

- Table IBNLINES (IBN Line Assignment) defines the IBN station numbers, attendant consoles, and MADNs supported by the switch and the hardware options assigned to each. This table is datafilled when the line is assigned in SERVORD or when the SCA MADN feature is associated with a 500/2500 telephone. This feature changes subfield MDNTYPE in this table. SBA and MBA are no longer valid entries in this subfield. These obsolete MADN types can be created by altering the attributes of an SCA MADN in Table MDNGRP. If an SCA MADN group is created in Table IBNLINES, a default entry is automatically added to Table MDNGRP.
- Table KSETLINE (Business Set and Data Unit Line Assignment) defines the business set and data unit numbers supported by the switch and the hardware options assigned to each. This table is datafilled when the line is assigned in SERVORD or the SCA MADN feature is associated with an MBS. If an SCA MADN group is created in Table KSETLINE, a default entry is automatically added to Table MDNGRP
- Table MDNGRP (Multiple Appearance Directory Number Group) contains one tuple for each MADN group for which at least one member has been datafilled. This table identifies the SCA MADN group

Enhanced MADN Call Control (continued)

information for MBSs and 500/2500 sets when datafilled through SERVORD.

The key to Table MDNGRP is the DN assigned to the MADN group. Table MDNGRP is a change-only table. Tuples cannot be directly added to or deleted from this table. When a new MADN group is created, a new tuple is added automatically to Table MDNGRP. Whenever a MADN group is deleted, the corresponding tuple in Table MDNGRP is automatically deleted. When an SCA MADN is created, the tuple in Table MDNGRP will contain default values for SCA attributes. To customize the attributes of an SCA MADN, Table MDNGRP must be changed through SERVORD.

The following datafill information for Table MDNGRP applies to MBSs:

1. If subfield BRIDGING in Table MDNGRP is set to N, the datafill for this MADN group member is complete. If subfield BRIDGING is set to Y, go to step 2.
2. If subfield INITSTAT is set to PRIVATE, the MBS must have a way to control PRL. If subfield INITSTAT is set to NONPRIVATE, go to step 3.
   a. If PRL is controlled by a dedicated feature key on the business set, assign PRL through SERVORD. An entry is automatically datafilled in Table KSETFEAT. This feature is used to establish conference calls for MADN SCA members.
   b. If PRL is controlled by feature access codes instead of by a key, datafill Table IBNXLA to define activation and cancellation codes for PRL (PRLA, PRLC).
3. If subfield INITSTAT is set to NONPRIVATE, the MBS can be assigned the PRV option.
   a. If privacy is controlled by a dedicated key on the business set, assign PRV through SERVORD. An entry is automatically datafilled in Table KSETFEAT. This key acts as a toggle that alternately activates and deactivates privacy, which prevents other MADN group members from bridging into a conversation.
   b. If PRV is controlled by feature access code instead of by a key, datafill Table IBNXLA to define an activation/deactivation code for privacy. This code alternately activates and deactivates PRV.

Enhanced MADN Call Control (continued)

The following datafill information for Table MDNGRP applies to 500/2500 sets:

1. If subfield BRIDGING in Table MDNGRP is set to N, the datafill for this MADN group member is complete. If subfield BRIDGING is set to Y, go to step 2.
2. If subfield INITSTAT is set to PRIVATE, access codes must be defined to control PRL. The access codes for activating and canceling PRL are defined in Table IBNXLA (PRLA, PRLC).
3. If subfield INITSTAT is set to NONPRIVATE, an access code is defined to activate and deactivate PRV. One access code alternately activates and deactivates PRV and is defined in Table IBNXLA.
   - Table KSETFEAT (Business Set and Data Unit Feature) lists the line features assigned to business sets and data units. The PRL and PRV features associated with SCA MADNs for the business set are assigned through SERVORD and are automatically datafilled in this table.
   - Table IBNXLA (IBN Translation) provides the instructions that translate the digits for the PRL, PRV, MHLA, and MHLC access codes. These access codes are required for 500/2500 set activation or deactivation or for business sets without the dedicated key for PRL, PRV, MHLA, and MHLC.

The Enhanced MADN Call Control translation process is shown in the flowchart that follows.

The Enhanced MADN Call Control translation process is shown in the flowchart that follows. The flowchart and data show assignment of an MDN SCA group through SERVORD and the table information required when the PRL and PRV options are assigned to an MBS key or a 500/2500 telephone. The feature acronym in SERVORD for MADN is MDN.

Enhanced MADN Call Control (continued)

Translations data flow for activating Enhanced MADN Call Control

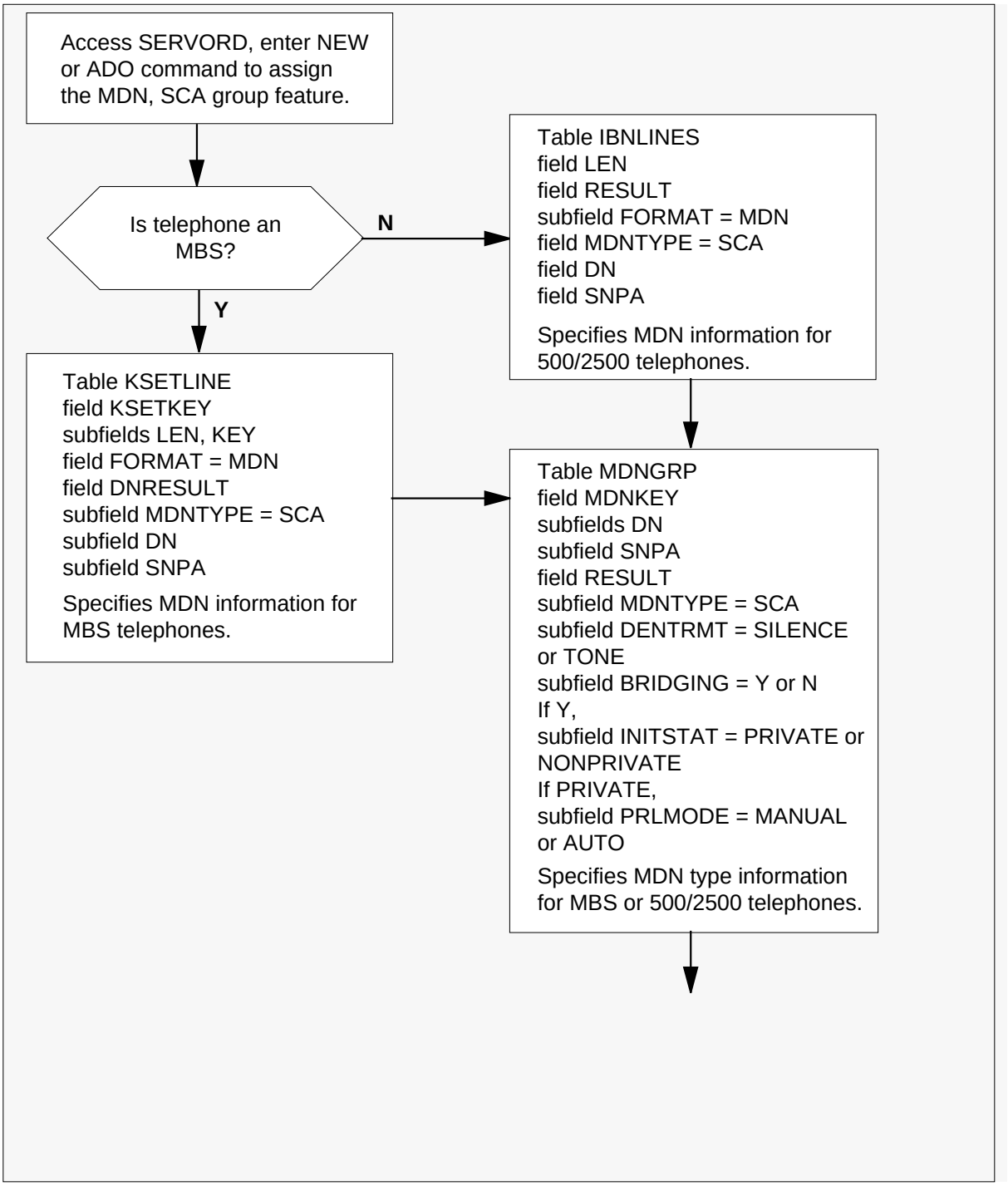

Enhanced MADN Call Control (continued)

Translations data flow for activatingEnhanced MADN Call Control (continued)

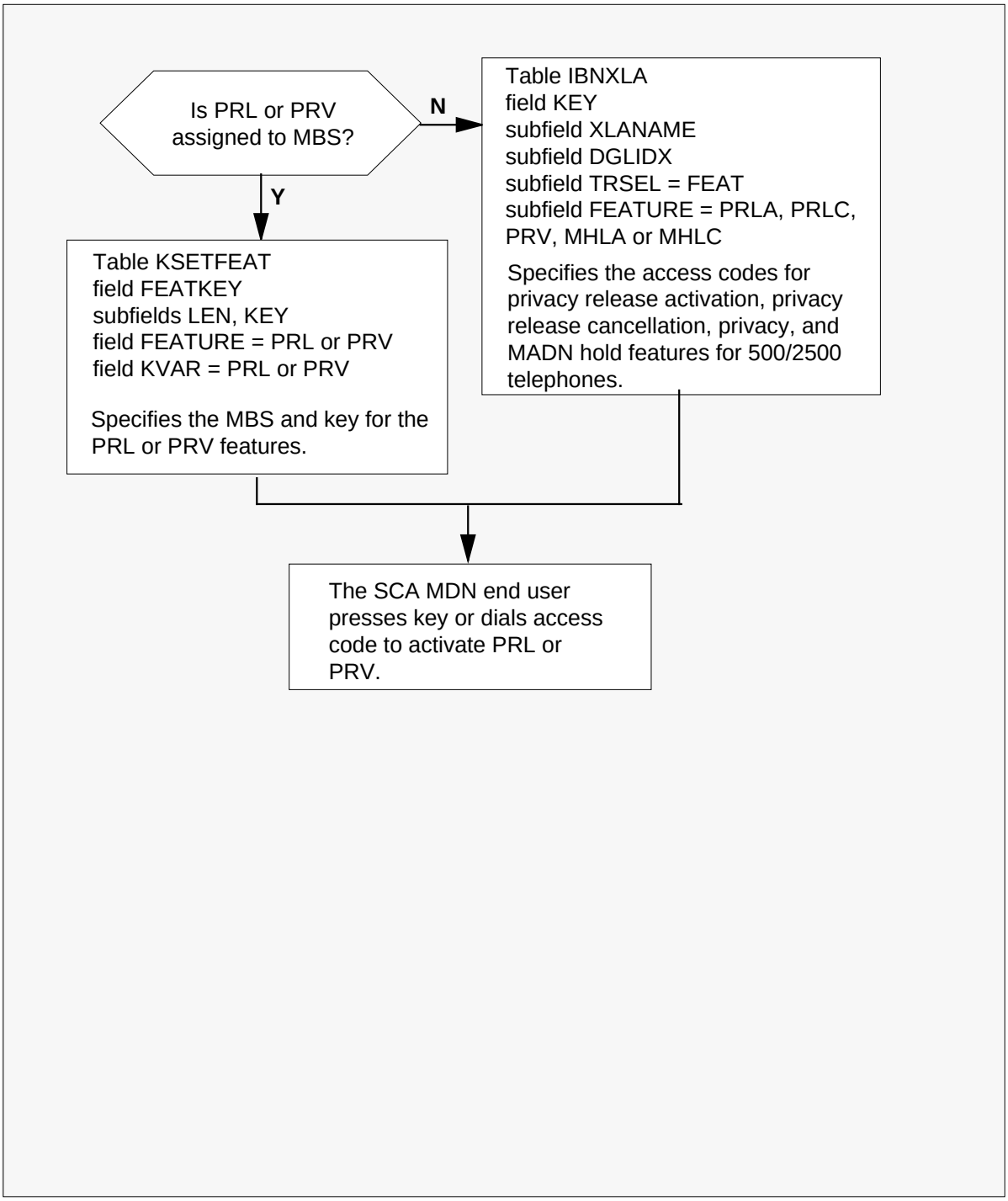

Enhanced MADN Call Control (continued)

The following table lists the datafill content used in the flowchart.

Datafill example for Enhanced MADN Call Control

Item	Example data
MADN LEN of MBS	HOST 00 0 08 02
MADN LEN of 500/2500	HOST 00 0 05 01
Activation code for PRL	84
Deactivation code for PRL	85
Activation/Deactivation code for Prv	86

Datafill example for Enhanced MADN Call Control

Datafill table	Example data
KSETLINE	HOST 00 0 08 02 3 MDN SCA Y Y 5554396 MDCGRP1 0 0 919$
IBNLINES	HOST 00 0 05 01 0 DT MDN IBN 5551816 MDCGRP1 0 0 919 SCA Y Y $
MDNGRP	919 5554396 4 SCA TONE Y 6 Y PRIVATE AUTO$
	919 5551816 4 SCA TONE Y 6 Y NONPRIVATE$
KSETFEAT	HOST 00 0 08 02 9 PRV PRV
	HOST 00 0 09 03 9 PRL PRL
IBNXLA	MDCSLA1 84 FEAT N N N PRLA
	MDCSLA1 85 FEAT N N N PRLC
	MDCSLA1 86 FEAT N N N PRV
	MDCSLA1 87 FEAT N N N MHLA
	MDCSLA1 88 FEAT N N N MHLC

Limitations and restrictions

Enhanced MADN Call Control has no limitations or restrictions.

Interactions

The following paragraphs describe the interactions between Enhanced MADN Call Control and other functionalities.

Enhanced MADN Call Control (continued)

Feature interactions for SCA MADN group members - bridging not allowed

This section discusses the functionalities in which bridging is not allowed while the given feature is active on the active MADN group member.

Attendant Console features

Bridging is not allowed if SCA MADN is on the call.

Directed Call Pickup - Barge In

Bridging is not allowed if SCA MADN is on the call.

Executive Busy Override

Bridging is not allowed if SCA MADN is on the call.

Malicious Call Hold

Bridging is not allowed if SCA MADN is on the call.

Meet Me Conference

Bridging is not allowed if SCA MADN is on the call.

Feature interactions for SCA MADN group members - bridging allowed

This section discusses the conditions under which bridging is allowed while the given feature is active on the active MADN group member and explains whether an active MADN group member can activate the given feature after bridging has occurred.

Call Waiting

500/2500 set bridging is not allowed if the active (500/2500 set) MADN group member is being waited on. Call waiting is not allowed on any active 500/2500 set MADN group member after a conference bridge has been established.

MBS bridging is allowed if the active business set MADN group member is being waited on.

A call can be waited on an active business set MADN group member after a conference bridge has been established (regardless of whether the external party is present or not). The call waiting feature is assigned on an individual member basis. It is recommended that the call waiting option be assigned to every member in a group for consistent operation.

MADN Hold

Bridging cannot occur if the active member has activated MADN hold. MADN hold takes precedence over bridging. Therefore, if an idle member

goes off-hook when MADN hold is active, the held call is retrieved by the idle member.

MADN hold cannot be activated after a conference bridge has been established. Only local hold applies after bridging has occurred.

When MADN hold is activated, the original privacy status of the call is automatically reinstated.

If a conference bridge is established or the external party is gone and an active member presses the HOLD key or another DN key, the call becomes locally held. Local hold, unlike MADN hold, is transparent to all other parties in the call. As a result, the MADN lamp of the locally held member winks, and the lamp state of all other members remains unaffected. The locally held member can retrieve the call by pressing the MADN key regardless of whether the call is private or not.

Preset Conference

Bridging is allowed if the active member is involved in a preset conference provided the active member is not in the process of adding another party to the preset conference.

No active MADN group member can add another party to the preset conference after a conference bridge has been set up.

Station Controlled Conference

Bridging is allowed if the active member is involved in a station-controlled conference provided the active member is neither the conference controller nor the terminator of the consult leg.

No active MADN group member can activate station controlled conference (flash and dial another party) after a conference bridge has been set up.

Three-Way Calling

Bridging is allowed if the active member is involved in a three-way call conference provided the active member is not the three-way call controller.

No active member can activate three-way calling (flash and dial another party) after a conference bridge has been set up.

> ***Note:*** In BCS31 and up, this interaction is removed by feature AG1566, MADN Bridging - 3 Way Call. This feature allows a member to activate three-way calling after a conference bridge has been set up, and if desired, add the party to the conference bridge. Refer to MADN Bridging - 3 Way Call for more information.

Enhanced MADN Call Control (continued)

Other feature activations

No active MADN group member is permitted to activate any other feature (except the privacy [PRV] or privacy release [PRL] features) after a conference bridge has been established.

External party feature interactions

This section describes whether bridging is allowed when the given feature is active on an external party and whether the external party can activate the given feature after bridging has occurred.

Attendant Console:

Bridging is not allowed if the external party is an attendant console.

Call Transfer:

The external party cannot transfer a conference bridge to a call controlled by an attendant console.

The external party cannot transfer a conference bridge to a party who is in a dialing or ringing state.

The external party cannot perform a Blind Transfer while attempting to transfer a conference bridge.

Call Waiting

With 500/2500 sets, bridging is not allowed if the active MADN group member or another party is waiting on the the external 500/2500 set party.

Call waiting is not allowed on the external 500/2500 set party after a conference bridge is established.

With MBSs, waiting events related to the external MBS party do not affect the bridging capabilities of an SCA line.

MADN Hold

The external party can be an SCA line. MADN hold events related to the external party do not affect the bridging capabilities of an SCA line.

MADN SCA with Bridging Capability

The external party can be another SCA line with bridging capability. Bridging is allowed on both SCA lines.

> ***Note:*** SERVORD is the recommended method for assigning features and options to a line. This is because SERVORD checks for feature incompatibilities before allowing a feature to be added to a line.

Station Controlled Conference

Bridging is permitted if the external party is the controller of a station-controlled conference provided the active MADN group member is not the terminator of the consult leg of the call.

Three-Way Calling

Bridging is permitted if the external party is the controller of a three-way call. The events related to the three-way call do not affect the bridging capabilities of the SCA line.

Other Features

The external party is not permitted to activate any feature (except privacy or privacy release if the external party is an SCA line with bridging capability) after a conference bridge has been established.

While on MADN hold, the external party is prevented from activating features. This is consistent with other hold features.

Activation/deactivation by the end user

Enhanced MADN Call Control requires no activation or deactivation by the end user.

Billing

Enhanced MADN Call Control does not affect billing.

Station Message Detail Recording

Enhanced MADN Call Control does not affect Station Message Detail Recording.

Datafilling office parameters

Enhanced MADN Call Control does not affect office parameters.

Enhanced MADN Call Control (continued)

Datafill sequence

The following table lists the tables that require datafill to implement Enhanced MADN Call Control. The tables are listed in the order in which they are to be datafilled.

Datafill tables required for Enhanced MADN Call Control

Table	Purpose of table
IBNXLA	IBN Translation. This table provides the instructions that translate the digits for the PRL, PRV, MHLA, and MHLC access codes.
IBNLINES (Note)	IBN Line Assignment. This table defines the IBN station numbers, attendant consoles, and MADNs supported by the switch and the hardware options assigned to each.
KSETLINE (Note)	Business Set and Data Unit Line Assignment. This table defines the business set and data unit numbers supported by the switch and the hardware options assigned to each.
MDNGRP (Note)	Multiple Appearance Directory Number Group. This table contains one tuple for each MADN group for which at least one member has been datafilled.
KSETFEAT (Note)	Business Set and Data Unit Feature. This table lists the line features assigned to business sets and data units.
Note: This table is datafilled through SERVORD; therefore, no datafill procedure is provided. Refer to “SERVORD" for an example of using SERVORD to datafill these tables.	

Datafilling table IBNXLA

Table IBNXLA (IBN Translation) provides the instructions that translate the digits for the PRL and PRV access codes. These access codes are required for 500/2500 set activation or deactivation of PRL and PRV or for business sets without the dedicated key. One entry is required in the table for each different access code (PRLA, PRLC, PRV, MHLA, and MHLC).

Enhanced MADN Call Control (continued)

The following table shows the datafill specific to Enhanced MADN Call Control for table IBNXLA. Only those fields that apply directly to Enhanced MADN Call Control are shown. For a description of the other fields, refer to the data schema section of this document.

Datafilling table IBNXLA

Field	Subfield or refinement	Entry	Explanation and action
KEY		see subfields	Key. This field consists of subfields XLANAME and DGLIDX.
	XLANAME	alphanumeric	Translator Name. This subfield specifies the name that is assigned to the translator. Enter the 1- to 8-character name.
	DGLIDX	vector of up to 18 digits	Digilator Index. This subfield specifies the digit or digits assigned as an access code. Enter a vector of up to 18 digits that will activate privacy release.
RESULT		see subfield	Result. This subfield consists of subfield TRSEL.
	TRSEL	FEAT	Translation Selector. This field specifies the translation selector to be used. Enter FEAT.
If TRSEL is set to FEAT, subfields ACR, SMDR, and FEATURE require datafill.			
	ACR	Y or N	Account Code Entry. This subfield specifies whether an account code is required. Enter Y or N.
	SMDR	Y or N	Station Message Detail Recording. This subfield specifies whether SMDR is required. Enter Y or N.
	FEATURE	PRLA	Feature. This subfield specifies the feature assigned to a line. Enter PRLA.

Datafill example for table IBNXLA

The following example shows sample datafill in Table IBNXLA for the PRLA, PRLC, PRV, MHLA and MHLC activation and deactivation codes.

Enhanced MADN Call Control (continued)

MAP display example for table IBNXLA

```
KEY                  RESULT
---------------------------------------------------
MDCXLA1  84           FEAT  N N N PRLA
MDCXLA1  85           FEAT  N N N PRLC
MDCXLA1  86           FEAT  N N N PRV
MDCXLA1  87           FEAT  N N N MHLA
MDCXLA1  88           FEAT  N N N MHLC
```

Translation verification tools

Enhanced MADN Call Control does not use translation verification tools.

SERVORD

Tables IBNLINES, KSETLINE, MDNGRP, and KSETFEAT are automatically datafilled when Enhanced MADN Call Control is assigned using SERVORD.

Table IBNLINES defines the IBN station numbers, attendant consoles, and MADNs supported by the switch and the hardware options assigned to each.

Table KSETLINE defines the business set and data unit numbers supported by the switch and the hardware options assigned to each.

Table MDNGRP contains one tuple for each MADN group for which at least one member has been datafilled. This table identifies the SCA MADN group information for MBSs and 500/2500 sets when datafilled through SERVORD.

Table KSETFEAT lists the line features assigned to business sets and data units. The PRL and PRV features associated with SCA MADNs for the business set are assigned through SERVORD and are automatically datafilled in this table.

SERVORD limitations and restrictions

Enhanced MADN Call Control has no SERVORD limitations and restrictions.

SERVORD prompts

With this feature, SBA and MBA MADNs are made obsolete and are no longer accepted as entries for the MDNTYPE (MADN type) SERVORD prompt. Additional prompts are created to allow MADN SCA groups to be customized.

Enhanced MADN Call Control (continued)

The ADO (add option), DEO (delete option), NEW (establish service), and CHF (change feature information for preexisting feature) commands can be used to administer a MADN group. When a MADN group is administered through service orders, Table MDNGRP is automatically datafilled.

The attributes of an existing MADN group can be changed using the CHF command. To change the attributes of a MADN group, it is no longer necessary to delete all the members of the group and add them again with the new attributes.

> ***Note:*** Only the CHF command can be used to change the attributes of an existing MADN group.

The following table shows the SERVORD prompts created by Enhanced MADN Call Control to customize SCA MADNs.

SERVORD prompts for Enhanced MADN Call Control (Sheet 1 of 2)

Prompt	Valid input	Explanation
DENIAL_ TRMT	SILENCE, TONE	Defines the type of audible treatment that will be given to a member who is denied access to a call. Enter SILENCE or TONE.
BRIDGING	Y, N	Indicates whether the group has bridging capability. Enter Y or N.
Note: None of these prompts apply to MCA or EXB MADN groups. This feature does not change MCA or EXB MADNs.		

Enhanced MADN Call Control (continued)

SERVORD prompts for Enhanced MADN Call Control (Sheet 2 of 2)

Prompt	Valid input	Explanation
CONF_SIZE	3 to 30	Indicates the maximum conference bridge size. Enter a value from 3 to 30. This prompt only appears if Y is entered at the BRIDGING prompt. ***Note:*** This prompt only appears if Y is entered at the BRIDGING prompt.
BRIDGE_TONE	Y, N	Indicates whether a tone should be heard when a member bridges into a call. Enter Y or N. ***Note:*** This prompt only appears if Y is entered at the BRIDGING prompt.
INIT_STAT	PRIVATE, NONPRIVATE	Indicates whether a call is initially private or nonprivate. Enter PRIVATE or NONPRIVATE. ***Note:*** This prompt only appears if Y is entered at the BRIDGING prompt.
PRL_MODE	MANUAL, AUTO	Determines the operating mode of the privacy release option. Enter MANUAL or AUTO. ***Note:*** This prompt only appears if PRIVATE is entered at the INIT_STAT prompt.
Note: None of these prompts apply to MCA or EXB MADN groups. This feature does not change MCA or EXB MADNs.		

Enhanced MADN Call Control (continued)

Note: Tables IBNLINES, KSETLINE, MDNGRP, and KSETFEAT are automatically datafilled when Enhanced MADN Call Control is assigned using SERVORD.

SERVORD example for adding Enhanced MADN Call Control

The following service order example shows how a MADN SCA group with bridging capability is created by adding the MDN option to an existing line using the ADO command. Note that the CONF_SIZE and BRIDGE_TONE prompts appear since Y is entered at the BRIDGING prompt, and the PRL_MODE prompt appears since PRIVATE is entered at the INIT_STAT prompt.

Creating a MADN SCA group with bridging capability using SERVORD in prompt mode

```
>
SO:
> ADO
SONUMBER: NOW
>
OPTION:
> MDN
MDNTYPE:
> SCA
PRIMARY:
> Y
RING:
> Y
DIR_NUMBER: 7227010
>
INTERCEPT_NAME:  BLDN
>
DENIAL_TRMT:
> TONE
BRIDGING:
> Y
CONF_SIZE:
> 30
BRIDGE_TONE:
> Y
INIT_STAT:
> PRIVATE
PRL_MODE:
> MANUAL
OPTION:
> $
```

Enhanced MADN Call Control (continued)

SERVORD example for Enhanced MADN Call Control in no-prompt mode

```
> ADO $ MDN SCA Y Y 5557010 TONE Y 30 Y PRIVATE MANUAL $
```

The following service order example shows how a new member is added to an existing SCA group with bridging capability using the ADO command.

Note: In the example, the ADO command does not display any of the new prompts. This is because the bridging information cannot be changed when adding a member to an existing MADN group using the ADO command.

SERVORD example for adding a member to an existing MADN group using the ADO command in prompt mode

```
SO:
> ADO
SONUMBER: NOW
>
OPTION:
> MDN
MDNTYPE:
> SCA
PRIMARY:
> N
RING:
> Y
DIR_NUMBER: 5554398
> 5557010
OPTION:
> $
```

SERVORD example for Enhanced MADN Call Control using the ADO command in no-prompt mode

```
>ADO $ MDN SCA N Y 5557010 $
```

The following service order example shows how the bridging information of an existing MADN SCA group is changed using the CHF command.

Note: The only SERVORD command that can be used to change the group information of an existing MADN group is CHF.

Enhanced MADN Call Control (continued)

SERVORD example for changing the bridging information of an existing MADN SCA group using the CHF command in prompt mode

```
>
SO:
>CHF
SONUMBER: NOW
>
OPTION:
> MDN
MDNTYPE:
> SCA
PRIMARY:
> Y
RING:
> Y
DIR_NUMBER:  7227010
>
DENIAL_TRMT:
> TONE
BRIDGING:
> Y
CONF_SIZE:
>28
BRIDGE_TONE:
> Y
INIT_STAT:
>NONPRIVATE
 OPTION:
>$
```

SERVORD example for Enhanced MADN Call Control using the CHF command in no-prompt mode

```
>CHF $ MDN SCA Y Y 7227010 TONE Y 28 Y NONPRIVATE $
```

The following service order example shows how the group type of an existing SCA MADN group is changed to MCA using the CHF command.

Enhanced MADN Call Control (continued)

SERVORD example for changing the group type of an existing SCA MADN group to MCA using the CHF command in prompt mode

```
>
SO:
>CHF
SONUMBER: NOW
>
OPTION:
> MDN
MDNTYPE:
> MCA
PRIMARY:
> Y
RING
> Y
DIR_NUMBER:
> 7227010
OPTION:
> $

>

>
```

SERVORD example for Enhanced MADN Call Control in no-prompt mode

```
>CHF $ MDN MCA Y Y 7227010 $
```

The following service order example shows how a new MADN SCA group without any bridging capability is created using the ADO command.

Enhanced MADN Call Control (end)

SERVORD example for creating a new MADN SCA group without any bridging capability using the ADO command in prompt mode

```
>
SO:
>ADO
SONUMBER: NOW
>
OPTION:
> MDN
MDNTYPE:
> SCA
PRIMARY:
> Y
RING
> Y
DIR_NUMBER: 7227010
>
DENIAL_TRMT:
> TONE
BRIDGING:
> N
OPTION:
> $
```

SERVORD example for Enhanced MADN Call Control in no-prompt mode

```
>ADO $ MDN SCA Y Y $ TONE N $
```

Group Intercom All Call

Ordering codes

Functional group ordering code: MDC00008

Functionality ordering code: not applicable

Release applicability

BCS30 and up

Prerequisites

To operate, Group Intercom All Call has the following prerequisites:

- BAS Generic, BAS00003
- MDC MBS Minimum, MDC00007
- MDC Minimum, MDC00001

Description

Group Intercom All Call (GIAC) allows an MDC end user to page up to 29 members in his or her designated Group Intercom (GIC) group simultaneously, and establish a conference with the paged members. This functionality is extremely useful in situations where common announcements need to be broadcast to several individuals in the same GIC group. These individuals must be equipped with Meridian business sets (MBS). An individual group member hears the page over his or her own set's built-in speaker, and can (when required) respond to the originator.

Operation

The following paragraphs describe how Group Intercom All Call operates and how Table KSETFEAT (Business Set and Data Unit Feature) is used during the operatioN of Group Intercom All Call.

Activating GIAC

In order to use GIAC, an individual with an MBS must be a member of an intercom group that has GIAC datafilled in Table KSETFEAT (Business Set and Data Unit Feature). When a member activates GIAC, the other members that belong to the same GIAC group are paged. A GIAC group can have a maximum of 30 members (including the originator).

To activate GIAC, a member lifts the handset, presses the GIC key, and presses the octothorpe (#) key on the dial pad. The member who activates GIAC is known as the originator of the call. When GIAC is activated, a conference bridge is established, and each member of the GIAC group is placed on a port of the conference circuit.

Group Intercom All Call (continued)

Establishing a conference bridge

The conference circuits are selected from the pool of idle circuits and are allocated when GIAC is activated. The switch automatically allocates the number of conference circuits required based on the number of members in the GIAC group. If the required number of conference circuits are not available, the originator receives the no service circuit (NOSC) treatment. If the maximum number of conference circuits assigned to the customer group is exceeded, the originator receives the customer group resource overflow (CGRO) treatment. In either of these cases, GIAC activation is denied and the other members are not paged. If there are enough conference circuits, the originator hears ringing.

Answering a GIAC page

When the originator activates GIAC by pressing the GIC key followed by the octothorpe key, the other MBSs in the conference receive ringing if they are idle, and their GIC lamps begin to flash. The originator hears ringing. Members who answer before the closing of the conference are placed in the conference with the originator.

Paging over the speaker

The originator can page the members of the GIAC group over their own sets' built-in speakers by pressing the GIC key a second time after pressing the octothorpe key. This action establishes a one-way speech path between the conference and those members of the group who have not yet answered the GIAC call.

Only those members who are not active on other directory number (DN) keys or on a GIC key are paged. If a member is active on a DN key (talking, programming a key, or dialing), the MBS is given alert tone, and the GIC lamp begins flashing.

If no members are available for paging, the originator hears ringing until a party enters the conference by pressing the GIC key. Note that the originator is only given one chance to page. Subsequent GIC key presses by the originator during ringing are ignored.

Conferencing

A member is added to the GIAC conference whenever the member presses the GIC key or lifts the handset during paging. Whenever a member enters the conference, the other conferees hear bridging tone to alert them that someone is entering the conference. Bridging tone consists of 500 ms of ringing tone. A member who has entered the conference remains in the conference when the originator closes the conference.

Group Intercom All Call (continued)

Closing the conference

The originator can close the conference by pressing the GIC key after successful paging or after a party acknowledges an unsuccessful page. Once the conference is closed, subsequent pressing of the GIC key is ignored. When the originator closes the conference, the GIC keys of the members who were paged but did not answer are idled. Members who did answer remain in the conference with the originator.

When a conference is closed, the conferees hear conference lock tone to notify them that the conference is closed. Once closed, a GIAC conference cannot be reopened. No additional parties can be added into the conference. Members can enter or leave the conference any time before it is locked.

Exiting the conference

When a conferee exits the conference, the remaining conferees hear a burst of conference exit tone.

Ending the conference

The conference ends when only one conferee remains in the conference. When the conference ends, the remaining conferee is disconnected, and all conference circuits are released.

User interface

The members of a GIAC group can be listed using the QGRP (query group) command. The QGRP command is not a MAP (maintenance and administration position) menu command; it is a program directory (PROGDIR) command entered at the command interpreter (CI) level of the MAP. The end user enters the group number of a GIAC group. The QGRP command lists the current members of the GIAC group, displaying the line equipment number (LEN), key number, and GIC group member number for each member. The output produced by QGRP GIAC is similar to that produced by QGRP GIC; however, only members of the GIAC group are listed.

The following figure shows the output of a QGRP GIAC command. Column one contains the LEN of the member. Column two contains the key to which GIAC is assigned, and column three contains the line's GIC group member number.

Example MAP display of the QGRP command

```
CI
 QGRP  GIAC  0 0 8 5  5
 GIAC GROUP

 ____________________________________________________________

  HOST 01 0 00 15   KEY 2     MEMBER 26
  HOST 00 0 08 05   KEY 4     MEMBER 12
  HOST 00 0 01 26   KEY 3     MEMBER 15
  HOST 00 0 01 28   KEY 4     MEMBER 86
```

If the end user enters a LEN and key that does not have GIAC, the following message is displayed:

```
LEN AND KEY ARE NOT A MEMBER OF A GIAC GROUP
```

Translations table flow

The Group Intercom All Call translations process is shown in the following flowchart. The flowchart and data show the translation flow for an MBS with GIAC, indicating that the member is allowed to be the originator of a GIAC call.

Group Intercom All Call (continued)

Table flow for Group Intercom All Call

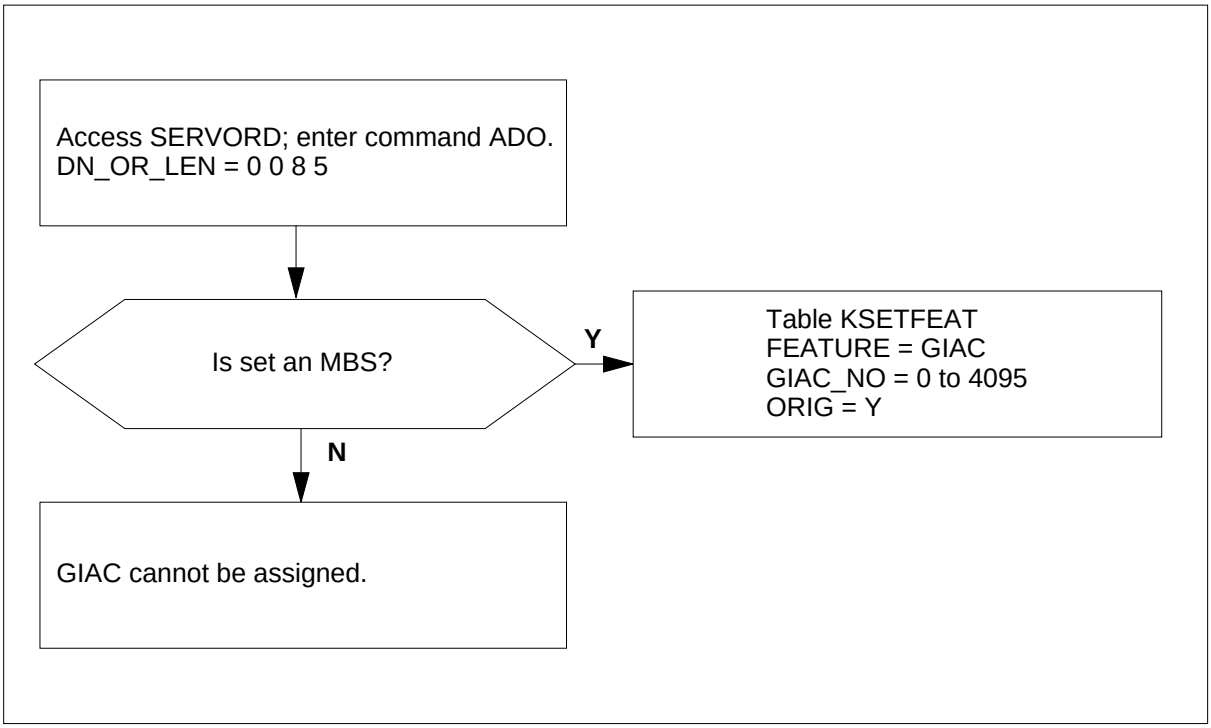

The following table lists the datafill content used in the flowchart.

Datafill example for Group Intercom All Call

Datafill table	Example data
KSETFEAT	HOST 0 0 8 5 4 GIAC GIAC 7 Y $

Limitations and restrictions

The following limitations and restrictions apply to Group Intercom All Call:

- Group Intercom All Call only applies to MBSs. This feature cannot be used with 500 and 2500-type sets because they cannot page or be paged using the GIAC feature.
- A GIAC call cannot terminate on an MBS when the member is already active on the GIC key. However, when the member is active on another DN key, GIAC terminates normally (but that member cannot then be paged).
- Each GIAC group can have a maximum of 30 members (including the originator).
- A maximum of 4096 GIAC groups can be assigned for each DMS-100 switching system.

- All GIAC group members must belong to the same GIC group and customer group.
- Multiple GIAC groups are allowed for each GIC group; however, a GIC group member cannot belong to more than one GIAC group.
- An MBS with multiple GIC keys can have GIAC assigned to each key (and each GIC key can belong to a different GIAC group); however, each key can only be assigned option GIAC once.
- GIAC can only be assigned to GIC lines. All GIC feature restrictions also apply to GIAC.
- When conference circuits are not available, or when the maximum number of circuits allocated to the customer group is exceeded, GIAC is denied.

  Note: If the customer group is limited to a certain number of six-port conference circuits from option CONF6C in Table CUSTENG (Customer Group Engineering), the operating company can evaluate option CONF6C to ensure that the customer group has access to enough conference circuits to accommodate all the GIAC groups in the customer group.

- All individual member conference circuits are held for the duration of the conference, and are only released when the last conference member exits the conference.

Interactions

The following paragraphs describe the interactions between Group Intercom All Call and other functionalities.

Call Forwarding

When a GIAC conference terminates on an MBS, all versions of Call Forwarding applied to that set are ignored. GIAC paging is not forwarded.

Call Pickup

A GIAC call cannot be answered using the Call Pickup or Directed Call Pickup feature.

GIAC Conference

During the time a conferee is connected to a GIAC conference, the following features are disabled for the duration of the call:

- Call Waiting
- Three-Way Calling

Group Intercom All Call (continued)

- Call Transfer
- Conferencing

A GIAC group member cannot be paged when he or she is active on either the GIC key or another DN.

Activation/deactivation by the end user

To activate GIAC, a GIAC group member performs the following steps.

Activation/deactivation of Group Intercom All Call by the end user

At your telephone

1 Lift the handset and press the GIC key.

Response:

GIC key lamp lights up. Member hears dial tone.

2 Press the octothorpe (#) key to activate GIAC.

Response:.

Member is now the originator and controller of the GIAC call. Member hears ringing

3 Press the GIC key a second time to start speaker paging. Talk to members over a one-way speech path.

Response:

Built-in speaker in each group member's MBS is turned on.

4 Make the page announcement over the built-in speaker in each group member's MBS.

Response:

Group members hear the page announcement.

5 Press the GIC key a third time to close the conference.

Response:

Conference lock tone is applied to the conference. MBS speakers of group members who are not participating in the conference are turned off.

6 Exit the conference by going on-hook.

Response:

Exit tone is applied to conference. Conference is terminated.

Example of a GIAC conference

The following example illustrates a typical GIAC conference.

Group Intercom All Call (continued)

Members A, B, C, D, and E are in the same GIC group and are assigned option GIAC.

- Member A lifts the handset and presses the GIC key. The GIC key lamp lights up. Member A hears dial tone.
- Member A presses the octothorpe key to activate GIAC. Member A hears ringing. Member A is now the originator.
  - — Members B and C receive ringing, and their GIC lamps begin flashing.
  - — Member D is active on another DN (talking, dialing, or programming a feature), and hears alert tone. The GIC lamp begins flashing.
  - — Member E is active on the GIC key or in another GIAC conference, is not alerted, and cannot be conferenced.

    Note: If a sufficient number of conference circuits were not available at this step, the originator would receive NOSC or CGRO treatment. If stations B, C, D, and E were all active, the originator would receive busy line treatment.

- Member A presses the GIC key a second time to start speaker paging.
  - — Member B's and C's GIC lamps turn solid, the speakers in their phones are turned on, and the displays are updated to show conference.
  - — Member D's GIC lamp continues to flash.
- Member A talks to members B and C over a one-way speech path. Members B and C can hear member A talking.
- Member C wants to respond to member A and lifts the handset.
  - — Member C's speaker is turned off, and member C is placed in the conference.
  - — Bridging tone is applied to the conference.
  - — The conversation between members A and C is now heard over member B's speaker.
- Member D, who was active on a DN, is now available and answers the call by pressing the GIC key.
  - — Member D is placed in the conference.
  - — Bridging tone is applied to the conference.
  - — Members A, C, and D are now in the conference, and member B hears the conference over his or her set's speaker.

Group Intercom All Call (continued)

- Member A presses the GIC key a third time to close the conference.
  - — Members A, C, and D remain conferenced.
  - — Member B's speaker is turned off.
  - — Conference lock tone is applied to the conference.
- Member A exits the conference by going on-hook.
  - — Exit tone is applied to the conference.
  - — Members C and D remain conferenced.
- When either member C or member D exits, the conference is terminated.

Billing

Group Intercom All Call does not affect billing.

Station Message Detail Recording

Group Intercom All Call does not affect Station Message Detail Recording.

Datafilling office parameters

Group Intercom All Call does not affect office parameters.

Datafill sequence

The following table lists the tables that require datafill to implement Group Intercom All Call. The tables are listed in the order in which they are to be datafilled.

Datafill tables required for Group Intercom All Call

Table	Purpose of table
KSETFEAT	Business Set and Data-Unit Feature. This table lists the line features that are assigned to the bunisess sets and data units (DU) listed in table KSETLINE, and also the Meridian digital telephone sets and DUs listed in table IVDINV.
Note: This table is datafilled through SERVORD; therefore, no datafill procedure or example is provided. Refer to “SERVORD" for an example of using SERVORD to datafill this table.	

Translation verification tools

Group Intercom All Call does not use translation verification tools.

SERVORD

SERVORD is used to datafill table KSETFEAT.

Table KSETFEAT lists the line features that are assigned to the bunisess sets and data units (DU) listed in table KSETLINE, and also the Meridian digital telephone sets and DUs listed in table IVDINV.

SERVORD limitations and restrictions

The Service Order System (SERVORD) is enhanced to handle the addition of option GIAC to MBSs. The following SERVORD commands can be used with option GIAC:

- NEW (establish service)
- ADO (add option)
- DEO (delete option)

Before option GIAC can be added to an existing line, the line must already have option GIC. For new lines, options GIC and GIAC can be added at the same time.

SERVORD prompts

The following table shows the SERVORD prompts used to assign Group Intercom All Call to an existing line.

SERVORD prompts for Group Intercom Call

Prompt	Valid input	Explanation
DN_OR_LEN	7-digit DN or LEN	Specifies the 7-digit DN or LEN of the line to be changed. Enter the DN or LEN.
OPTKEY	1 to 69	Indicates the key on an MBS to which an option is assigned. Enter a value from 1 to 69.
OPTION	GIAC	Indicates the name of the option. Enter GIAC.
GIAC_NO	0 to 4095	Indicates the GIAC group number. Enter a value from 0 to 4095.
ORIG	Y, N	Indicates whether the line is allowed to originate a GIAC call. Enter Y or N.

Note: Table KSETFEAT is automatically datafilled when Group Intercom All Call is assigned using SERVORD.

SERVORD example for adding Group Intercom Call

The following SERVORD example shows how Group Intercom All Call is added to a line using the ADO command.

Group Intercom All Call (end)

SERVORD example for Group Intercom All Call in prompt mode

```
SO:
> ADO
SONUMBER:     NOW  92  1  1 AM
> $
DN_OR_LEN:
> 0 0 8 5
OPTKEY:
> 4
OPTION:
> GIAC
GIAC_NO:
> 7
ORIG:
> Y
OPTKEY:
> $
```

SERVORD example for Group Intercom All Call in no-prompt mode

```
> ADO $ 0 0 8 5 4 GIAC 7 Y $
```

If the GIAC group does not already exist when option GIAC is added to a line, the following message is displayed:

```
A NEW GIAC GROUP HAS BEEN ADDED
```

If the key to which GIAC is assigned is not a GIC key, the following message is displayed:

```
GIAC CAN ONLY BE ASSIGNED TO A GIC KEY
```

Individual Page from GIC

Ordering codes

Functional group ordering code: MDC00008

Functionality ordering code: not applicable

Release applicability

BCS24 and up

Prerequisites

To operate, Individual Page from GIC has the following prerequisites:

- BAS Generic, BAS00003
- MDC MBS Minimum, MDC00007
- MDC Minimum, MDC00001

Description

Enhanced MADN Call Control provides for one member of a group intercom (GIC) group, using the GIC key of a Meridian business set (MBS), to activate the built-in alerting speaker of another GIC group member's MBS for paging purposes. Both GIC group members must be in the same GIC group.

Operation

The caller presses the GIC key and dials the appropriate GIC number. Following the first ring, the caller again presses the GIC key. A one-way connection is established, and the caller can then talk over the speaker. The called group member can establish a two-way conversation by either pressing the ON key of the hands-free unit or by lifting the handset.

Translations table flow

The Individual Page from GIC translations tables are described in the following list:

- Table KSETLINE (Business Set and Data Unit Line Assignment) defines the business set and data unit numbers supported by the switch and the hardware options assigned to each. The GIC feature (field FORMAT) is assigned to a specific key (field KSETKEY, subfield KEY) and a specific member number (field DNRESULT, subfield MEMBER). Subfield ICMGRP specifies a name for the group. The end user can reach a member in the same group from the MBS by pressing the GIC key and dialing a

Individual Page from GIC (continued)

specific member number. Subfield IGNORMSB (Y, N) is an enhancement to this feature in BCS25.

- Table CUSTSTN (Customer Group Station Option) contains the station options assigned to each customer group. Option GICPAGE in Table CUSTSTN specifies the capability for a member of a GIC group to automatically activate the broadcast through the business set speaker when placing a call to another member

The following table lists the datafill content used in the flowchart.

Datafill example for Individual Page from GIC

Datafill table	Example data
LEN and key for GIC	HOST 02 0 00 13 8
GIC member number	3
KSETLINE	HOST 02 0 00 13 8 GIC GICGRP1 3 N Y
CUSTSTN	MDCGRP1 GICPAGE GICPAGE $

The Enhanced MADN Call Control translations process is shown in the flowchart in the following figure. The flowchart and data show the GIC feature assigned to the MBS and the capability to broadcast messages through the speaker on GIC calls on a customer group basis.

Individual Page from GIC (continued)

Table flow for Individual Page from GIC

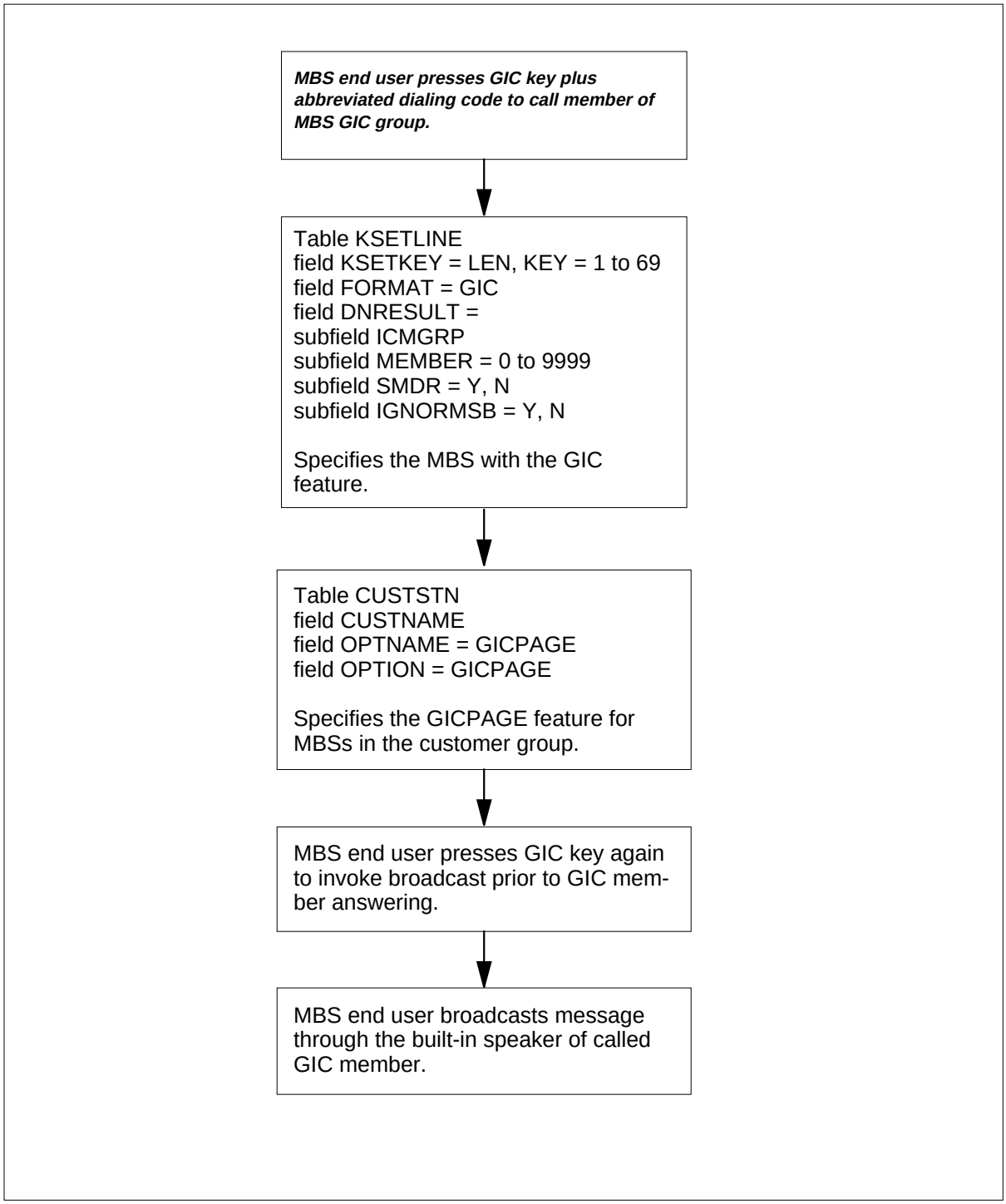

Individual Page from GIC (continued)

Limitations and restrictions

The following limitations and restrictions apply to Individual Page from GIC:

- Although members of a GIC group can have 500/2500 sets, a 500/2500 set end user cannot page or be paged using Individual Page from GIC. If an MBS GIC end user attempts to page a 500/2500 set end user, the originator's GIC key/lamp begins to flash (60 ipm) for 5 s as audible ringing continues. The call proceeds as if the page were never requested. The GIC key lamp returns to its previous state (solid).

  Note: If the originator performs a set of actions that would normally involve changing the lamp state of the GIC key lamp within 5 s of flashing, the flashing state is overridden.

- The originator is not allowed to page while in any type of conference call. The page request is only acknowledged if the terminating GIC group member's number was dialed from a GIC key.
- If the terminating set has an active DN, the built-in alerting speaker is not turned on.

Interactions

The following paragraphs describe the interactions between Individual Page from GIC and other functionalities:

Conference Calls

Individual Page from GIC can only be invoked on the initial leg of a conference call and then only if the initial call is placed without involving a conference key press.

Hold and Autohold

If the originator places the GIC key on hold while hearing audible ringing and then presses the GIC key to return to the GIC call, that second key press is not considered a request for a GIC page.

Note: If any feature such as hold or autohold is initiated while the GIC key lamp is flashing for 5 s, the flashing state is overridden.

Three-Way Calling and Call Transfer

Individual Page from GIC is only applicable on the first leg of either of these call types.

Note: If the originator of a three-way call has the transfer option, this scenario may occur: STN-A pages STN-B but the user of STN-B is not there. STN-A calls STN-C and STN-A drops out of the call (thus

transferring the call to STN-B). The user of STN-C answers, but there is no active caller.

Activation/deactivation by the end user

Individual Page from GIC requires no activation or deactivation by the end user.

Billing

Individual Page from GIC does not affect billing.

Station Message Detail Recording

Individual Page from GIC does not affect Station Message Detail Recording.

Datafilling office parameters

Individual Page from GIC does not affect office parameters.

Datafill sequence

The following table lists the tables that require datafill to implement Individual Page from GIC. The tables are listed in the order in which they are to be datafilled.

Datafill tables required for Individual Page from GIC

Table	Purpose of table
CUSTSTN	Customer Group Station Option Table. This table is required for a switching unit with North American translations and the Meridian Digital Centrex (MDC) or the feature AG0508 (Residential Enhanced Services) (RES). This table lists the station options assigned to each of the customer groups.
KSETLINE (Note)	Business Set And Data-Unit Line Assignment Table. This table contains the directory number appearances for business sets and data units. ***Note:*** This table is datafilled through SERVORD; therefore, no datafill procedure or example is provided. Refer to “SERVORD" for an example of using SERVORD to datafill this table.

Datafilling table CUSTSTN

The following table shows the datafill specific to Individual Page from GIC for table CUSTSTN. Only those fields that apply directly to Individual Page from

Individual Page from GIC (continued)

GIC are shown. For a description of the other fields, refer to the data schema section of this document.

Datafilling table CUSTSTN

Field	Subfield or refinement	Entry	Explanation and action
OPTION		GICPAGE	Option. This field specifies the group intercom page option. Enter GICPAGE.
Note: GICPAGE is available for any OPTION under Table CUSTSTN.			

Datafill example for table CUSTSTN

The following example shows sample datafill for table CUSTSTN.

MAP display example for table CUSTSTN

```
CUSTNAME      OPTNAME      OPTION
-------------------------------------------------------
MDCGRP1       GICPAGE      GICPAGE
```

Translation verification tools

Individual Page from GIC does not use translation verification tools.

SERVORD

The Service Order System (SERVORD) can be used to add the MSB and GIC options to a line using the ADO (add option) command.

Table KSETLINE is datafilled through SERVORD. This table contains the directory number appearances for business sets and data units.

SERVORD limitations and restrictions

Individual Page from GIC has no SERVORD limitations and restrictions.

Individual Page from GIC (continued)

SERVORD prompts

The following table shows the SERVORD prompts used to assign Enhanced MADN Call Control to an existing line.

SERVORD prompts for Individual Page from GIC

Prompt	Valid input	Explanation
DN_OR_LEN	7-digit DN or LEN	Specifies the 7-digit DN or LEN of the line to be changed. Enter the DN or LEN.
OPTKEY	1 to 69	Indicates the key on an MBS to which an option is assigned. Enter a value from 1 to 69.
OPTION	MSB, GIC	Indicates the name of the option. Enter MSB or GIC.
KEYLIST	1 to 69	Specifies the key numbers of the DNs to which an option applies. Enter a value from 1 to 69.
GICNAME	Any name, up to 8 characters	Indicates the name for the group intercom line. Enter a name of up to 8 characters.
GICMEMNO	Any number, up to 4 digits	Specifies the digits dialed to reach a line. Enter up to 4 digits.
GICSMDR	Y, N	Indicates whether SMDR records are required. Enter Y or N.
GICNOMSB	Y, N	Indicates whether group intercom calls are exempted from MSB. Enter Y or N.

SERVORD example for adding Individual Page from GIC

The following service order example shows how Individual Page from GIC is added to a line using the ADO command. The KEYLIST contains keys 1, 3, and 4, meaning that these DNs will be included in MSB.

Individual Page from GIC (continued)

SERVORD example for Individual Page from GIC in prompt mode

```
>
SO:
> ADO
SONUMBER:    NOW 87 10 10 PM
>
DN_OR_LEN:
> 2 1 2 22
OPTKEY:
> 5
OPTION:
> MSB
KEYLIST:
> 1
KEYLIST:
> 3
KEYLIST:
> 4
KEYLIST:
> $
OPTKEY:
> $
```

SERVORD example for Individual Page from GIC in no-prompt mode

```
>ADO $ 2 1 2 22 5 MSB 1 3 4 $ $
```

The following service example shows how the GIC option is added to a line using the ADO command. The value N is entered at the GICNOMSB prompt. This means that GIC is not exempt from MSB.

Individual Page from GIC (end)

SERVORD example for Individual Page from GIC in prompt mode

```
>
SO:
> ADO
SONUMBER:    NOW 87 10 10 PM
>
DN_OR_LEN:
>2 1 2 11
OPTKEY:
> 7
OPTION:
> GIC
GICNAME:
> GGRP01
GICMEMNO:
> N
GICNOMSB:
> 4
KEYLIST:
> N
OPTKEY:
> $
```

SERVORD example for Individual Page from GIC in no-prompt mode

```
>ADO $ 2 1 2 11 7 GIC GGRP01 23 N N $
```

Last Number Redial from Set

Ordering codes

Functional group ordering code: MDC00008

Functionality ordering code: not applicable

Release applicability

BCS24 and up

Prerequisites

To operate, Last Number Redial from Set has the following prerequisites:

- BAS Generic, BAS00003
- MDC Minimum, MDC00001
- MDC MBS Minimum, MDC00007

Description

Last Number Redial from Set (LNRA) allows the end user to have the last number that was called on a Meridian business set (MBS) automatically redialed on any directory number (DN) that is compatible with this feature, regardless of the DN previously used to place the call.

LNRA only affects MBSs and is not offered for 500/2500 sets. With LNRA, only one number—the last one called from the set—can be redialed using this feature. LNRA is a separate feature from the Last Number Redial (LNR) feature, and the two are not compatible. LNR redials the last number called from a particular DN appearance on the business set.

Operation

Last Number Redial from Set allows an MBS end user to redial the last number called from the set with either a single key or a designated access code. By redialing the last number called from the set rather than from a particular DN appearance, LNRA simplifies the last number redial capability for MBS end users. Previously, the end user was required to remember from which DN appearance the call was placed initially so that the redial could be activated from that same DN appearance. With Last Number Redial from Set, the call can be dialed initially from any DN appearance, and the redial capability can be activated from any DN appearance.

Last Number Redial from Set (continued)

LNRA is assigned on a customer group basis. LNRA can be activated after a DN is chosen by any of the following methods:

- pressing the octothorpe (#) key once
- pressing the octothorpe key twice
- dialing the feature access code.

Pressing the octothorpe key twice activates the feature more quickly than pressing the octothorpe key once. When the octothorpe key is pressed only once, a timeout period must expire to assure that no other feature is being activated.

Translations table flow

The Last Number Redial from Set translations process is shown in the flowchart in the following figure. The flowchart and data show the specific information in Table KSETLINE for LNRA and the result of the feature assignment to the business set.

Last Number Redial from Set (continued)

Table flow for Last Number Redial from Set

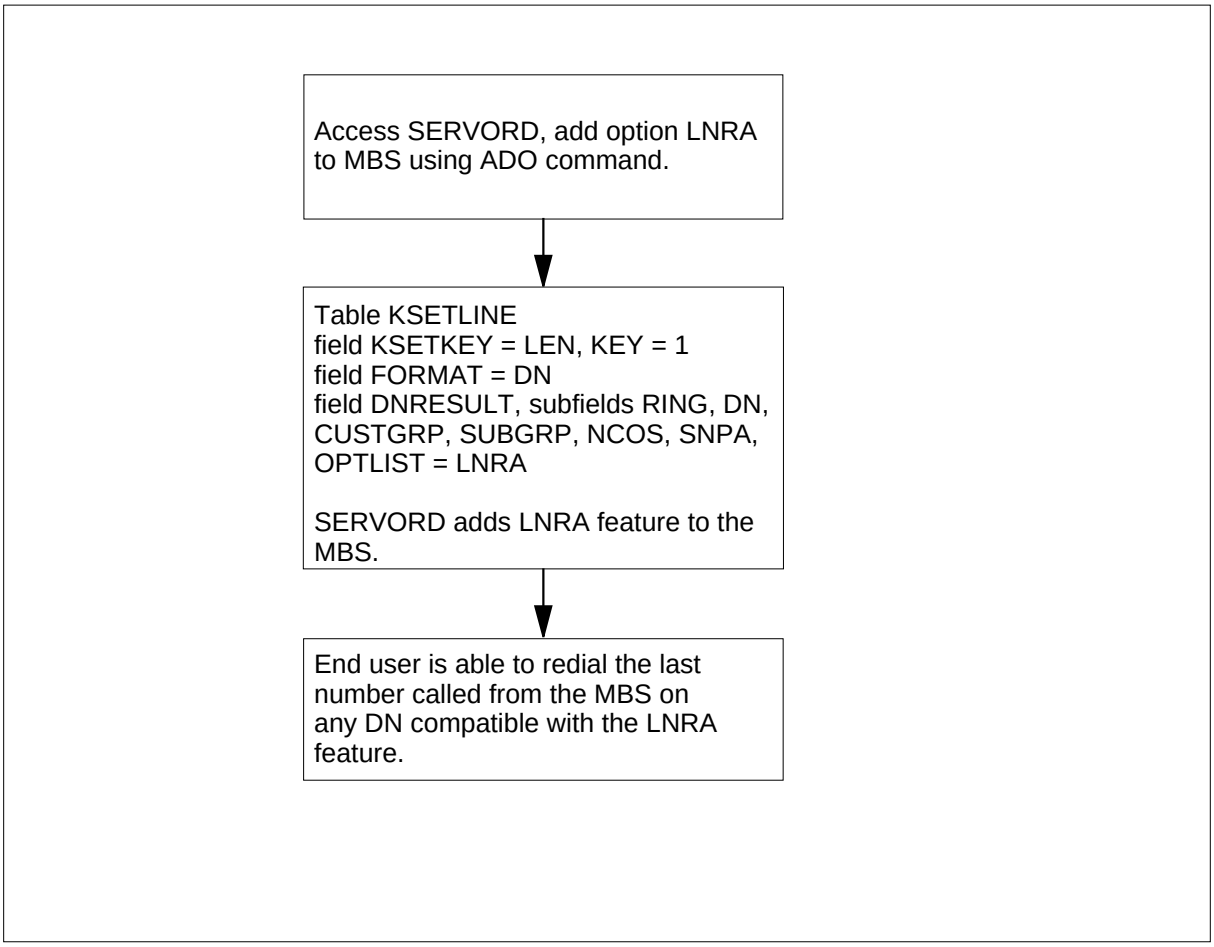

The following table lists the datafill content used in the flowchart.

Datafill example for Last Number Redial from Set

Datafill table	Example data
LEN and key for LNRA	HOST 02 0 00 13 1
KSETLINE	HOST 02 0 00 13 1 DN Y 5551234 MDCGRP1 0 0 919 LNRA $

Limitations and restrictions

The following limitations and restrictions apply to Last Number Redial from Set:

- When LNRA is first assigned to a set, no number is stored as the last number dialed. If the end user attempts to activate the feature at this point, a reorder tone is heard.
- LNRA can only be assigned to an MBS. This feature can only be associated with the primary directory number (PDN) of an MBS.
- The LNRA feature is not compatible with last number redial, denied origination (DOR), or automatic line (AUL). If any DN on an MBS has LNR, LNRA cannot be assigned to that set. However, if an MBS has a DN that is either a DOR line or an AUL, LNRA can be assigned to the set. Two limitations exist in this case:
  - The DN that is a DOR line or AUL cannot be used when LNRA is activated.
  - The number dialed from an AUL is not redialed on a DN on the set using LNRA.

Interactions

The following paragraphs describe the interactions between Last Number Redial from Set and other functionalities.

Group intercom (GIC)

LNRA interactions with group intercom (GIC) occur in a similar manner to the LNR feature, but interactions between LNRA and GIC could give unintended results, as in the following examples:

- A DN is used to place a call. The number dialed is 123-4567. After the call is terminated, the end user accesses a GIC key and activates LNRA. The number automatically dialed is 123-4567. Depending on the number of digits required for the GIC abbreviated dialed number, either 1, 12, 123, or 1234 is taken as that number. The result is either an unintended call or a reorder tone, depending on whether or not the resulting number is a valid GIC abbreviated dialed number.
- The GIC key is used to place a call. The number dialed by the end user is 3. After termination of the call, the end user accesses another DN and activates LNRA. The number that is automatically redialed is 3. Because this DN is not a GIC key, the desired call cannot be made using this abbreviated dialed number. The call is not placed, and a reorder tone results.

Last Number Redial from Set (continued)

The end user should be aware that other similar situations could result with GIC and LNRA interaction, as in the case where an MBS has multiple GIC keys that belong to different GIC groups.

Activation/deactivation by the end user

Last Number Redial from Set requires no activation or deactivation by the end user.

Billing

Last Number Redial from Set does not affect billing.

Station Message Detail Recording

Last Number Redial from Set does not affect Station Message Detail Recording.

Datafilling office parameters

Last Number Redial from Set does not affect office parameters.

Datafill sequence

The following table lists the tables that require datafill to implement Last Number Redial from Set. The tables are listed in the order in which they are to be datafilled.

Note: This table is datafilled through SERVORD; therefore, no datafill procedure or example is provided. Refer to “SERVORD" for an example of using SERVORD to datafill this table.

Datafill tables required for Last Number Redial from Set

Table	Purpose of table
KSETLINE	Business Set And Data-Unit Line Assignment. This table contains the directory number appearances for business sets and data units.

Translation verification tools

Last Number Redial from Set does not use translation verification tools.

SERVORD

Option LNRA is assigned using the Service Order System (SERVORD) command ADO (add option). The DEO (delete option) command is used to remove option LNRA. Option LNRA allows an MBS to access any free DN on the set, and by activating option LNRA, have the last number dialed from the set automatically redialed.

Last Number Redial from Set (continued)

Table KSETLINE

Table KSETLINE (Business Set and Data Unit Line Assignment) defines the business set and data unit numbers supported by the switch and the hardware options assigned to each. The LNRA feature is assigned to key 1 of the business set (field KSETKEY, subfield KEY), but the capability of this feature applies to all DNs compatible with this feature. Field DNRESULT, subfield OPTLIST on the business set specifies option LNRA. The LNRA feature and datafill for this table are assigned through SERVORD.

SERVORD limitations and restrictions

Last Number Redial from Set has no SERVORD limitations and restrictions.

SERVORD prompts

The following table shows the SERVORD prompts used to assign Last Number Redial from Set to an existing line.

SERVORD prompts for Last Number Redial from Set

Prompt	Valid input	Explanation
DN_OR_LEN	7-digit DN or LEN	Specifies the 7-digit DN or LEN of the line to be changed. Enter the DN or LEN.
OPTKEY	1 to 69	Indicates the key on an MBS to which an option is assigned. Enter a value from 1 to 69.
OPTION	LNRA	Indicates the name of the option. Enter LNRA.
Note: Table KSETLINE is automatically datafilled when Last Number Redial from Set is assigned using SERVORD.		

SERVORD example for adding Last Number Redial from Set

The following SERVORD example shows how Last Number Redial from Set is added to key 5 of an MBS with LEN 0 0 1 5 to monitor another set with LEN 0 1 0 5 using the ADO command.

Last Number Redial from Set (end)

SERVORD example for Last Number Redial from Set in prompt mode

```
>
SO:
> ADO
SONUMBER: NOW 92 10 01 PM
>
DN_OR_LEN:
> 0 0 1 5
OPTKEY:
> 5
OPTION:
> LNRA
OPTKEY:
> $
```

SERVORD example for Last Number Redial from Set in no-prompt mode

```
> ADO $ 0 0 1 5 LNRA 0 1 0 5 Y $
```

MADN Bridging - 3 Way Call

Ordering codes

Functional group ordering code: MDC00008

Functionality ordering code: not applicable

Release applicability

MADN Bridging - 3 Way Call was introduced in BCS31.

Prerequisites

To operate, MADN Bridging - 3 Way Call has the following prerequisites:

- BAS Generic, BAS00003
- MDC MBS Minimum, MDC00007
- MDC Minimum, MDC00001

Description

MADN Bridging - 3 Way Call allows the end user of a multiple appearance directory number (MADN) single call arrangement (SCA) group to initiate a three-way call while the MADN is in a bridged state. This allows the end user to conference an additional external party into the call.

A MADN is a directory number (DN) that is shared by several lines. Each line is known as a MADN member. A group of lines is known as a MADN group. When a caller dials the MADN, any member of the group can answer the call. All MADN calls are initially made up of one MADN member and one external party. The term *external party* refers to the party who is not part of the MADN group.

This feature applies to MADN SCA groups. A MADN SCA group allows one call to be active on the MADN at a time. When a MADN member is talking to an external party, other MADN members can enter the call by going off-hook. This capability is known as bridging because it establishes a conference bridge. Prior to this feature, a MADN SCA member could not establish a three-way call once the MADN was in a bridged state. This limitation prevented a MADN member from adding an additional external party to the bridge. With MADN Bridging - 3 Way Call, a MADN member can activate three-way calling while the MADN is in a bridged state.

Operation

The functionality of three-way calling from a MADN is the same as for regular three-way calling with the following exception. A MADN member cannot call transfer the external party into the bridge. If the MADN member who initiates

MADN Bridging - 3 Way Call (continued)

the three-way call goes on-hook or presses the Release (RLS) key, the additional external party is disconnected from the call, not transferred into the bridge.

Three-way call chaining is supported with this feature. The external party can establish a three-way call chain with another external party. This capability allows many additional external parties to be added to the conference bridge.

Translations table flow

MADN Bridging - 3 Way Call does not affect translations table flow.

Limitations and restrictions

MADN Bridging - 3 Way Call removes the three-way call restriction for SCA MADNs. All other limitations and restrictions that apply to the three-way call features and MADN features are still in effect.

The following limitations and restrictions apply to MADN Bridging - 3 Way Call:

- A MADN member cannot call transfer the external party into the bridge. If the MADN member who initiates the three-way call goes on-hook or presses the RLS key, the additional external party is disconnected from the call, not transferred into the bridge.
- A MADN member is not notified of privacy setting changes while involved in a three-way call, nor can the member change the privacy setting.
- Only one MADN member is allowed to make a three-way call on the conference bridge. If another member attempts to make a second three-way call, the member receives negative acknowledgment (NACK) treatment. When the first three-way call is over, any member can establish a new three-way call. Note that the external party can also initiate a three-way call.
- A MADN member cannot call a meet-me conference number or a preset conference number as the second leg of the three-way call.
- A MADN member can use the Authorization Last or Account Code Last feature when dialing the second leg of the three-way call. However, a member cannot use voluntary authorization or account codes.

Interactions

The following features interact with MADN Bridging - 3 Way Call:

Autodial

The Autodial key can be used to dial the second leg of the three-way call.

Call Waiting Originating

Call Waiting Originating (CWO) can be used to impose call waiting on the second leg of the three-way call.

Dial Call Waiting

Dial Call Waiting can be used on the second leg of the three-way call.

Last Number Redial

Last Number Redial can be used to dial the second leg of the three-way call.

MADN Release

If the MADN group has the MADN Release (MREL) feature, all members of the group are idled when the original external party disconnects, except the member who is consulting or conferenced with an additional external party.

Activation/deactivation by the end user

The following procedure shows how MADN Bridging - 3 Way Call is activated and deactivated for a call involving two MADN members and two external parties.

Activation/deactivation of MADN Bridging - 3 Way Call by the end user

At your telephone

1 MADN member 1 goes off-hook.

Response:

Call is established between external calling party 1 and MADN member 1.

2 MADN member 2 goes off-hook.

Response:

Conference bridge is established between external calling party 1, MADN member 1, and MADN member 2.

3 MADN member 2 presses Call Transfer/Three-Way Calling (CXR/3WC) key.

Response:

Lamp on CXR/3WC key goes on. DN key blinks. MADN member 2 is excluded from the conference bridge and receives special dial tone.

Note: If MADN member 2 has a 2500 set instead of a Meridian business set (MBS), the member flashes the hookswitch instead of pressing the CXR/3WC key.

4 MADN member 2 dials external party 2.

Response:

MADN member 2 and external party 2 are connected.

5 MADN member 2 presses CXR/3WC key.

Response:

MADN Bridging - 3 Way Call (end)

MADN member 2 and external party 2 are included in the conference bridge.

Note: If MADN member 2 has a 2500 set instead of a Meridian business set (MBS), the member flashes the hookswitch instead of pressing the CXR/3WC key.

6 MADN member 2 presses CXR/3WC key.

Response:

MADN member 2 and external party 2 are excluded from the conference bridge.

Note: If MADN member 2 has a 2500 set instead of a Meridian business set (MBS), the member flashes the hookswitch instead of pressing the CXR/3WC key.

7 MADN member 2 presses the RLS key.

Response:

External party 2 is disconnected.

8 MADN member 2 presses DN key.

Response:

MADN member 2 is reconnected to the conference bridge.

Billing

MADN Bridging - 3 Way Call does not affect billing.

Station Message Detail Recording

MADN Bridging - 3 Way Call does not affect Station Message Detail Recording.

Datafilling office parameters

MADN Bridging - 3 Way Call does not affect office parameters.

Datafill sequence

MADN Bridging - 3 Way Call does not affect datafill.

Translation verification tools

MADN Bridging - 3 Way Call does not use translation verification tools.

SERVORD

MADN Bridging - 3 Way Call does not use SERVORD.

MADN Cut-off on Disconnect (COD)

Ordering codes

Functional group ordering code: MDC00008

Functionality ordering code: not applicable

Release applicability

MADN Cut-off on Disconnect (COD) was introduced in BCS30.

Prerequisites

To operate, MADN Cut-off on Disconnect (COD) has the following prerequisites:

- BAS Generic, BAS00003
- MDC MBS Minimum, MDC00007
- MDC Minimum, MDC00001

Description

MADN Cut-off on Disconnect (COD) introduces options MREL and MLAMP for single call arrangement (SCA) multiple appearance directory number (MADN) groups. These options enhance the operational flexibility of the (nonprivate) MADN SCA feature, and also align feature operation more closely with key system practice. Options MREL and MLAMP are independent. That is, MADN SCA groups can be assigned one or both options.

Option MREL is recommended for MDC end users with a high call usage. Option MLAMP is recommended for MADN SCA groups that need to know when a call is bridged or on hold and thus available to other group members. MADN Cut-off on Disconnect (COD) applies to 500/2500 sets and Meridian business sets (MBS).

> ***Note:*** The functionality for 500/2500 sets is the same as for MBSs. However, all references made to keys and lamp states do not apply, because 500/2500 sets do not have keys and lamps. In particular, an idle MADN group member with a 500/2500 set bridges into a call by going off-hook.

Operation

This section describes the operation of MADN Cut-off on Disconnect (COD).

Background

A MADN is a directory number (DN) that is associated with several line appearances. That is, a MADN appears on several stations (for example, a

MADN Cut-off on Disconnect (COD) (continued)

executive's station and a secretary's station). This group of line appearances is known as a MADN group, and each individual line appearance is a MADN group member.

Any MADN group member can originate a call. When there is an incoming call to the MADN, all line appearances are alerted, and any member can answer the call. When a MADN group member is involved in a call on the MADN, that member is said to be *active*.

All MADN calls are initially made up of one MADN group member and one external party. The term *external party* refers to the party that is not part of the MADN group member's group. There are two types of MADN groups: multiple call arrangement (MCA) and single call arrangement (SCA). With a MADN MCA group, each group member can be simultaneously active on a call with a different external party. With a MADN SCA group, however, only one call at a time can be active on the MADN.

MADN SCA groups also have the option to allow bridging. Bridging is a process whereby a MADN group member conferences into an existing call. The call must be nonprivate and in a stable talking state at the time of bridging.

The following figure illustrates an example of a MADN group. External calls come into the executive's office, and the secretary can answer, invoke autohold, or conference the executive using any of the three MADN DNs (extensions 3001, 3002, and 3003). The executive and the secretary are MADN group members.

MADN Cut-off on Disconnect (COD) (continued)

Example MADN group

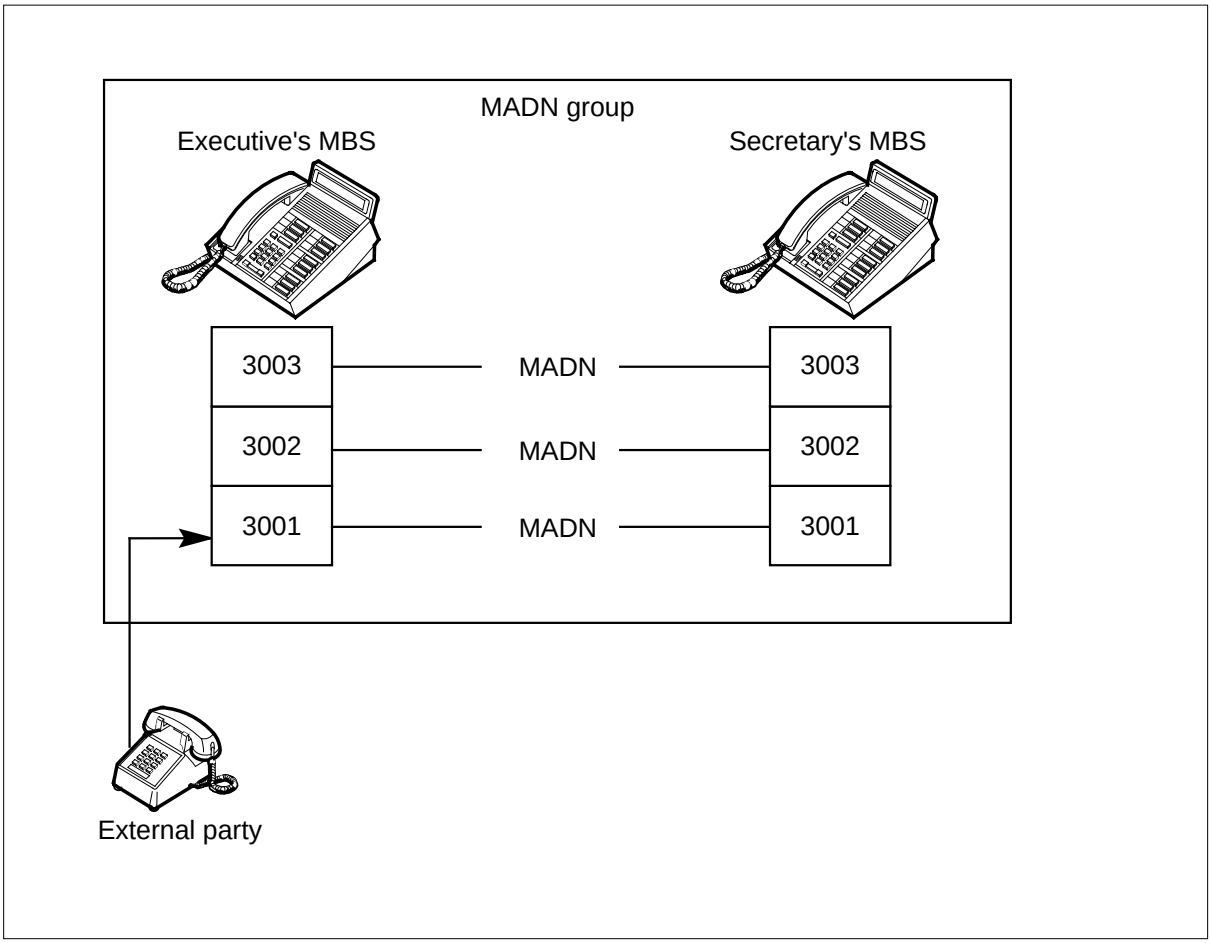

Option MREL

Option MREL makes it possible to customize the disconnection of external-party calls for MADN SCA groups with bridging. Prior to MADN Cut-off on Disconnect (COD), the bridged MADN group members remained active when the external party disconnected from the call. In many environments, the MADN group members could then discuss the details of the conference call. With option MREL, the bridge is taken down (released), ensuring that all MADN group members are automatically disconnected, and thereby giving incoming callers greater access to MADN DNs. MADN group members must originate another call if the details of the conference call need to be discussed. Option MREL is recommended for MDC end users with a high call usage.

When a MADN group is not bridged and an external party is disconnected, the MADN group member and MADN group are idled. Prior to MADN Cut-off

MADN Cut-off on Disconnect (COD) (continued)

on Disconnect (COD), if the external party is disconnected while the MADN group is bridged, the bridge is not affected. The DN is not free for other calls until one of the MADN group members releases the bridge. With option MREL assigned to the MADN group, the bridge is released when the external party is disconnected from the call, and the DN is free for other calls.

The following figure illustrates an application of option MREL. In this example, a MADN group consists of three stockbrokers: Jim, Tom, and Bob. Each stockbroker has an MBS with three DNs: 6001, 6002, and 6003. Furthermore, each DN is a MADN, and each MADN group has a status of nonprivate.

External party calling MADN group with bridging

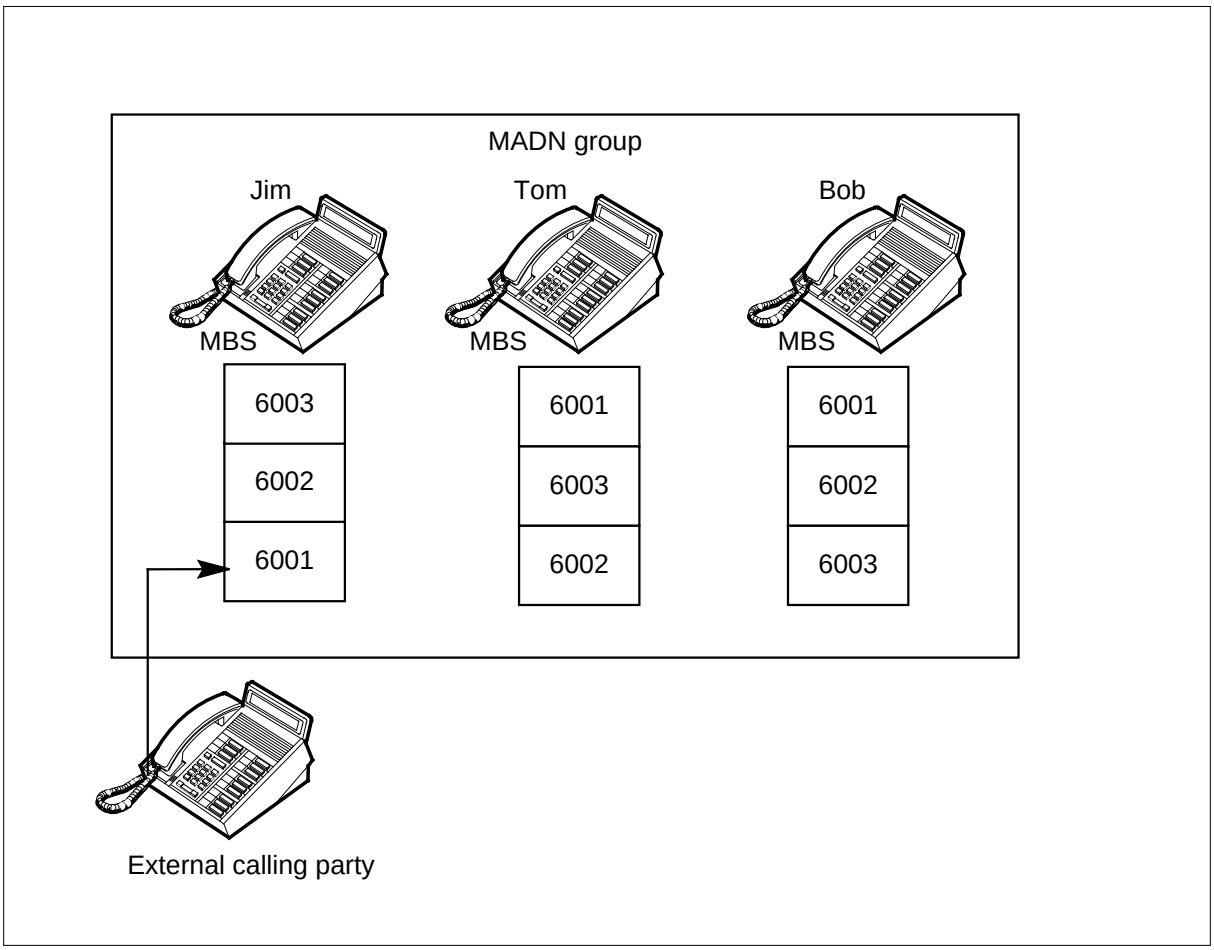

In the following figure, an external party places a call to stockbroker Jim on DN 6001. The three stockbrokers each answer the call on their MBSs,

MADN Cut-off on Disconnect (COD) (continued)

invoking MADN bridging and thus conferencing the call. The three MBSs are bridged on DN 6001 with the external party.

Realizing that stockbroker Jim has answered the call, stockbrokers Tom and Bob then respond to calls on other DNs by pressing the DN keys associated with DN 6002 or DN 6003. The first call on DN 6001 is therefore on autohold.

External party talking to bridged MADN group

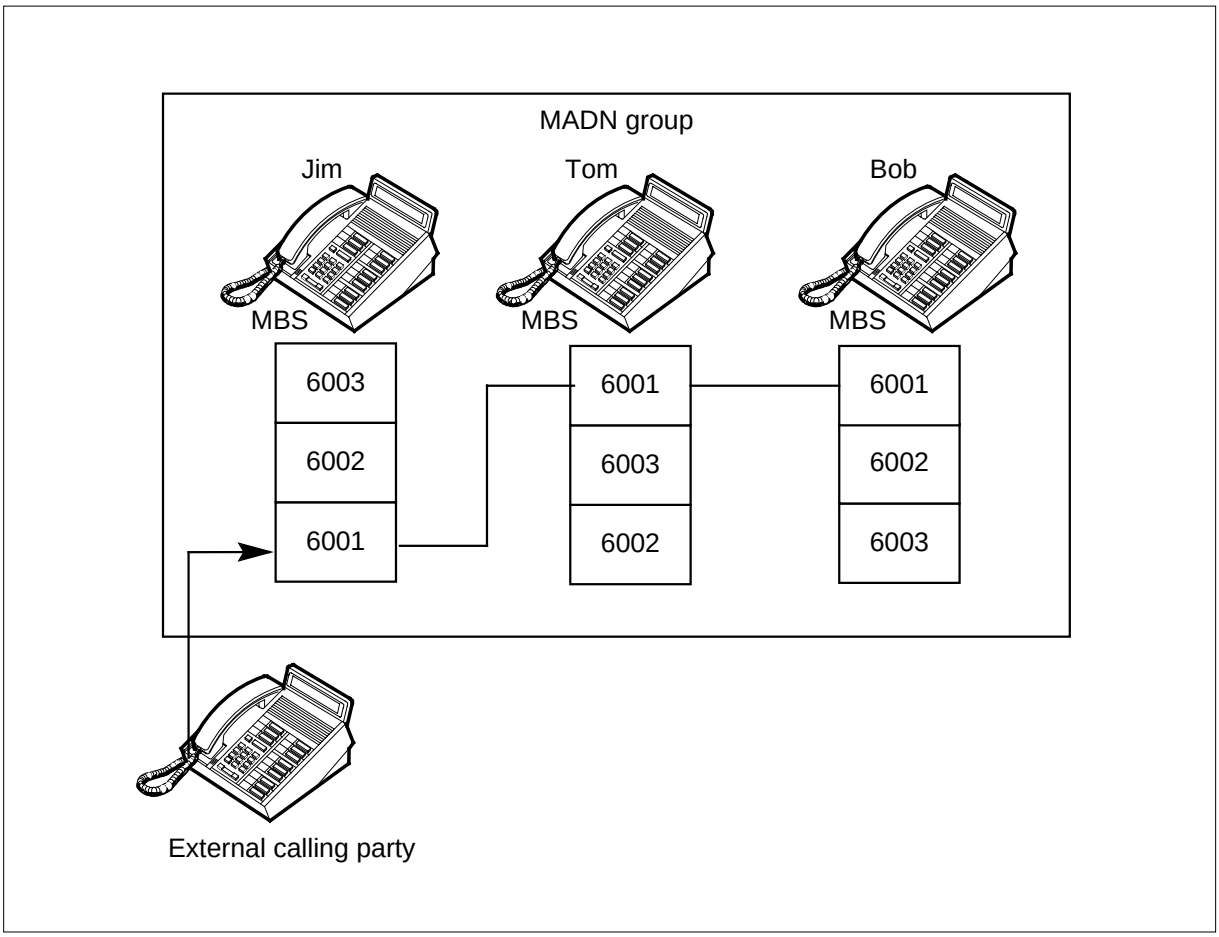

The external party now disconnects, and stockbroker Jim releases the call. Stockbroker Jim's MADN group does not idle because stockbrokers Tom and Bob are still bridged. All calls to DN 6001 receive busy tone until stockbroker Tom or Bob presses the DN key associated with stockbroker Jim's MADN group and release the bridge.

With option MREL, however, the MADN bridge is released, and all MADN group members are idle when the external party disconnects. Calls can then be made to or originated from stockbroker Jim's MADN group. In this way,

MADN Cut-off on Disconnect (COD) (continued)

MDC end users can improve usage of MADNs because the DN is immediately freed for other calls.

> ***Note:*** The usage of conference circuits is also more efficient with option MREL. When the external party disconnects a call, the conference circuits are immediately freed and can then be used for another conference.

With option MREL, bridge takedown occurs when the external party disconnects and no other party is being replaced as the external party. In the case where the external party is a preset conference member, the bridge is only taken down when the conference is originator controlled.

The following examples illustrate when takedown occurs. The MADN groups in the examples all have option MREL.

- The external party is the controller of a three-way call with call transfer. When the external party disconnects, the first leg is transferred to the second leg. If the second leg is a MADN bridge, the first leg is transferred to the bridge. The first leg then becomes the external party. Option MREL does not apply because there is still an external party connected to the bridge.
- The external party is the controller of a three-way call without call transfer. When the external party disconnects, the first leg and second leg are idled. If the second leg is a MADN bridge, option MREL applies, and the bridge is taken down because there is no external party connected to the bridge.

Option MLAMP

Option MLAMP emulates the lamp states on a key system. In a key system, the DN lamp winks only when a call is available for pickup by any MADN group member. A MADN group member's DN lamp remains steadily illuminated when the MADN group member presses another DN key (invoking autohold) and the MADN group is bridged. The corresponding DN lamps on all other MADN group members' sets remain off. When the call is bridged, only the lamp of the MADN group member who invoked autohold winks.

Option MLAMP is recommended for MADN groups that need to know when a call is bridged or on hold and thus available to other MADN group members. When a call is not bridged and the MADN group member invokes autohold, the lamp winks, indicating that the call is on hold and any MADN group member can pick up the call. Prior to MADN Cut-off on Disconnect (COD), the DN lamp winked at 120 impulses per minute when a MADN group member pressed another DN key.

MADN Cut-off on Disconnect (COD) (continued)

User interface

MADN Cut-off on Disconnect (COD) affects the command interpreter (CI) commands QDN (query directory number), QMADN (query multiple appearance directory number), QLEN (query line equipment number), and QGRP (query group).

The QDN, QMADN, and QGRP commands are used to verify options MREL and MLAMP when these options are assigned to a MADN group. When assigned to a 500/2500 set, options MREL and MLAMP also appear when the QLEN command is used. When assigned on an MBS, however, options MREL and MLAMP do not appear when the QLEN command is used. This is because several MADN groups could have appearances on an MBS, and each could have different MDNGRP information.

The following figure shows an example table editor display of the QGRP command to verify the MADN SCA group associated with DN 721-1000.

Example table editor display of the QGRP command

```
CI:
 >QGRP MDN 7211000
 ----------------------------------------------------

  MDN GROUP
  - -  - -
  PRIMARY:  HOST 00 0  08  08  KEY 1

  THE PRIMARY MEMBER HAS THE FOLLOWING OPTIONS:
  MREL  MLAMP

  THE NUMBER OF MEMBERS IN THE MADN SCA GROUP IS 3.
 ----------------------------------------------------
```

The following figure shows an example table editor display of the QMADN command to verify the MADN SCA group associated with DN 721-1000.

MADN Cut-off on Disconnect (COD) (continued)

Example table editor display of the QMADN command

```
CI:
>QMADN DISPLAY 7211000
-------------------------------------------------------
GROUP:  0   TYPE:  SCA      SIZE:  3
STATE:  IDLE      ACT:   1
PRL:  OFF         CTLR:  1    MODE:  AUTO
MFR:  N
BRG:  Y     TONE:  N        SIZE:  30
DNL:  3     CFW:   N        SSC:   N
EHLD:  N
MREL:  Y
MLAMP:  Y


<MEMBER #1>
>LEN HOST 00 0 03 24  DN 7211000
PRIM:  Y    XPM:   Y  TYPE:  MBS             MAP:Y
RING:  RNG  NAME:  N  CFMDN:   N
CHNL:  N    RNOC:  N  WORKT:   N  ASSO:  N
MTC:   N


<MEMBER #2>
>LEN  HOST 00 0 03 06  DN  7212000
PRIM:  Y    XPM:   Y  TYPE:  2500 SET        MAP:  Y
RING:  RNG  NAME:  N  CFMDN:   N
CHNL:  N    RNOC:  N  WORT:    N  ASSO:N
MTC:  N


<MEMBER #3>
>LEN HOST 00 0 03  09   DN 7213000
PRIM:  Y    XPM:   Y  TYPE:   MBS            MAP:Y
RING:  RNG  NAME:  N  CFMDN:   N
CHNL:  N    RNOC:  N  WORKT:   N   ASSO:  N
MTC:N

-------------------------------------------------------
```

The following figure shows an example table editor display of the QLEN command to verify the MADN SCA group associated with DN 722-7000.

MADN Cut-off on Disconnect (COD) (continued)

Example table editor display of the QLEN command

```
CI:
>QLEN  0 0 3 24
-------------------------------------------------------
LEN:  HOST 00 0 03 24
TYPE: MULTIPLE APPEARANCE DIRECTORY NUMBER
SNPA: 919
DIRECTORY NUMBER:  7227000
LINE CLASS CODE: MBS
CUSTGRP: MDCGRP1  SUBGRP:  0  NCOS:  0  RING: Y
ADDONS:  NONE  EXTENSION:  N
MADN INFO – TYPE:  SCA  PRIMARY:  Y
MADN SCA INFO – DENIAL TRTMT:  SILENCE  BRIDGING:  Y
   CONF SIZE:  10  BRIDGE_TONE:  Y  INITIAL_STAT:  PRIVATE
   PRL_MODE:  AUTO
CARDCODE: 6X21AC GND:  N  PADGRP: MBS BNV: NL MNO: Y
PM  NODE NUMBER:    16
PM TERMINAL NUMBER: 121
OPTIONS:


KEY         DN
---         --
  1         MDN   7227000  SCA  PRIMARY:  Y  RING:  ALWAYS

KEY         FEATURE
---         -----
-------------------------------------------------------
```

The following figure shows an example table editor display of the QDN command to verify the MADN SCA group associated with DN 722-1000.

MADN Cut-off on Disconnect (COD) (continued)

Example table editor display of the QDN command

```
CI:
>QDN  7221000
-------------------------------------------------------
DN: 7221000
TYPE: MULTIPLE APPEARANCE DIRECTORY NUMBER
SNPA: 919  SIG:  N/A  LNATTIDX:  N/A
LINE EQUIPMENT NUMBER:  HOST 00 0 3 24
PRIMARY LEN: HOST 00 0 3 24
LINE CLASS CODE:  MBS
KEY:  1
CUSTGRP: MDCGRP1  SUBGRP:  0  NCOS:  0  RING: Y
MADN INFO – TYPE:  SCA  PRIMARY:  Y
MADN SCA INFO – DENIAL TRMT:  SILENCE  BRIDGING:  N
CARDCODE: 6X21AC GND:N  PADGRP: MBS BNV: NL MNO: Y
PM  NODE NUMBER:    16
PM TERMINAL NUMBER: 121
OPTIONS:  MREL  MLAMP
MADN MEMBER LENS INFO:
HOST 00 0 03 24  KEY:  1  SCA  PRIMARY:  Y  RING:  ALWAYS
-------------------------------------------------------
```

Translations table flow

MADN Cut-off on Disconnect (COD) does not affect translations table flow.

Limitations and restrictions

The following limitations and restrictions apply to MADN Cut-off on Disconnect (COD):

- MADN Cut-off on Disconnect (COD) only applies to MADN SCA groups.
- Options MREL and MLAMP do not interfere with current MADN feature interactions. Option MREL only affects the takedown of the MADN bridge. Option MLAMP only affects the DN lamp states when a call is on hold.
- Options MREL and MLAMP can only be implemented through the Service Order System (SERVORD).
- Table MDNGRP can only be changed after MADN group members have been created in Table IBNLINES (IBN Line Assignment) or Table KSETLINE (Business Set and Data Unit Line Assignment) or through SERVORD.

MADN Cut-off on Disconnect (COD) (continued)

Interactions

MADN Cut-off on Disconnect (COD) has no functionality interactions.

Activation/deactivation by the end user

MADN Cut-off on Disconnect (COD) requires no activation or deactivation by the end user.

Billing

MADN Cut-off on Disconnect (COD) does not affect billing.

Station Message Detail Recording

MADN Cut-off on Disconnect (COD) does not affect Station Message Detail Recording.

Datafilling office parameters

MADN Cut-off on Disconnect (COD) does not affect office parameters.

Datafill sequence

The following table lists the tables that require datafill to implement MADN Cut-off on Disconnect (COD). The tables are listed in the order in which they are to be datafilled.

Note: The following table is datafilled through SERVORD; therefore, no datafill procedure or example is provided. Refer to “SERVORD" for an example of using SERVORD to datafill this table.

Datafill tables required for MADN Cut-off on Disconnect (COD)

Table	Purpose of table
MDNGRP	Multiple Appearance Directory Number Group. This table contains information associated with each multiple appearance directory number (MADN) group and for each member of a MADN group. These are change-only tables; tuples cannot be added or deleted.

Translation verification tools

MADN Cut-off on Disconnect (COD) does not use translation verification tools.

SERVORD

MADN Cut-off on Disconnect (COD) enhances the Service Order System (SERVORD) by allowing options MREL and MLAMP to be added to any member of a MADN SCA group with bridging. If bridging is removed from

MADN Cut-off on Disconnect (COD) (continued)

the MADN SCA group, the options are removed. In addition, if the group type is changed from SCA, options MREL and MLAMP are automatically removed from the MADN group.

Options MREL and MLAMP are independent. A specific MADN group can be assigned one or both options.

The following SERVORD commands can be used to modify options MREL and MLAMP:

- NEW-establish service
- OUT-remove service
- ADO-add option
- DEO-delete option

The CHF (change feature information for preexisting feature) command cannot be used with options MREL and MLAMP. Neither option has suboptions associated with it; therefore, there is no feature information to change. When the CHF command is used on either option, an error message is displayed stating that the CHF command does not apply to the option.

SERVORD limitations and restrictions

MADN Cut-off on Disconnect (COD) has no SERVORD limitations and restrictions.

SERVORD prompts

The following table shows the SERVORD prompts used to assign MADN Cut-off on Disconnect (COD) to an existing line.

SERVORD prompts for MADN Cut-off on Disconnect (COD) (Sheet 1 of 2)

Prompt	Valid input	Explanation
DN_OR_LEN	7-digit DN or LEN	Specifies the 7-digit DN or LEN of the line to be changed. Enter the DN or LEN.
DIR_NUMBER	7-digit DN	Indicates the DN assigned to a MADN line. Enter the 7-digit DN.
MDNTYPE	SCA	Specifies a multiple-access DN. Enter SCA.
Note: Table MDNGRP is automatically datafilled when MADN Cut-off on Disconnect (COD) is assigned using SERVORD.		

MADN Cut-off on Disconnect (COD) (continued)

SERVORD prompts for MADN Cut-off on Disconnect (COD) (Sheet 2 of 2)

Prompt	Valid input	Explanation
OPTION	MREL, MLAMP	Indicates the name of the option. Enter MREL or MLAMP.
OPTKEY	1 to 69	Indicates the key on an MBS to which an option is assigned. Enter a value from 1 to 69.
PRIMARY	Y, N	Indicates the primary member of a MADN group. Enter Y or N.
DENIAL_TRMT	TONE	Specifies audible treatment given to a MADN group member for denied access to a call. Enter TONE.
BRIDGING	Y, N	Indicates bridging capability for a MADN group. Enter Y or N.
BRIDGE_TONE	Y, N	Indicates whether a tone is heard when a MADN group member bridges into a call. Enter Y or N.
CONF_SIZE	3 to 30	Indicates the number of parties that can bridge into a MADN call. Enter a value from 3 to 30.
INIT_STAT	PRIVATE, NONPRIVATE	Indicates the initial status of a MADN call. Enter PRIVATE or NONPRIVATE.
PRL_MODE	MANUAL, AUTO	Indicates the privacy release mode for a MADN group. Enter MANUAL or AUTO.
Note: Table MDNGRP is automatically datafilled when MADN Cut-off on Disconnect (COD) is assigned using SERVORD.		

SERVORD example for implementing MADN Cut-off on Disconnect (COD)

The following SERVORD example shows how a new MADN SCA group is created by adding option MDN to an existing line on a 500/2500 set. The MADN SCA group is assigned option MREL.

MADN Cut-off on Disconnect (COD) (continued)

SERVORD example for MADN Cut-off on Disconnect (COD) in prompt mode - Adding option MREL to a new MADN SCA group using SERVORD

```
>
SO:
> ADO
SONUMBER:     NOW  92  1  1 PM
>
DN_OR_LEN:
> 7202000
OPTKEY:
> 2
OPTION:
> MDN
MDNTYPE:
> SCA
PRIMARY:
> Y
DIR_NUMBER:
> 7202000
DENIAL_TRMT:
> TONE
BRIDGING:
> Y
CONF_SIZE:
> 30
BRIDGE_TONE:
> N
INIT_STAT:
> PRIVATE
PRL_MODE:
>MANUAL
OPTKEY:
>2
OPTION:
>MREL
OPTKEY:
>$
```

SERVORD example for MADN Cut-off on Disconnect (COD) in no-prompt mode

```
> ADO $ 7202000 2 MDN SCA  Y 7202000 TONE Y 30 N PRIVATE
MANUAL 2 MREL $
```

The following service order example shows how options MREL and MLAMP are added to an existing MADN SCA group using the ADO command.

MADN Cut-off on Disconnect (COD) (end)

Adding options MREL and MLAMP to an existing MADN SCA group using SERVORD

```
>
SO:
> ADO
SONUMBER:     NOW  92  1  1 PM
>
DN_OR_LEN:
> 0 0 8 8
OPTKEY:
> 1
OPTION:
> MREL
OPTKEY:
> 1
OPTION:
> MLAMP
OPTKEY:
> $
```

SERVORD example for MADN Cut-off on Disconnect (COD) in no-prompt mode

```
>ADO $ 0 0 8 8 1 MREL 1 MLAMP $
```

MADN Ring Forward

Ordering codes

Functional group ordering code: MDC00008

Functionality ordering code: not applicable

Release applicability

BCS26 and up

Prerequisites

To operate, MADN Ring Forward has the following prerequisites:

- BAS Generic, BAS00003
- MDC MBS Minimum, MDC00007
- MDC Minimum, MDC00001

Description

The EBS Call Forwarding on a per Key Basis (MRF) feature provides more ringing options to single call arrangement (SCA) Multiple Appearance Directory Number (MADN). Without this feature, each appearance of a MADN could be designated to always ring or never ring for calls terminating on the MADN group.

With MRF, two additional ringing options are available. The appearances can ring from call termination until activation (abbreviated), or ring after activation (delayed). This feature also lets the end user of a Meridian business set (MBS) manually “push" the ringing for an incoming call to the appearances of the MADN designated for delayed ringing by pressing a button on the MBS designated for the MADN Ring Forward Manual (MRFM) feature.

Operation

The following paragraphs describe operation for MADN Ring Forward.

Background

The MRF feature allows the end user to determine how the ringing of a MADN is handled. For a call terminating on a MADN SCA group, the ringing can be applied to a set of appearances and can be moved or forwarded to another set after a designated time. The MRF feature provides the capability for the ring alerting associated with a call terminating on a MADN SCA group to be applied initially to one set of appearances of the MADN and then later to be forwarded to another set of appearances of the MADN. The other MADN ringing options are not affected by this feature.

MADN Ring Forward (continued)

Ring forwarding can be activated either automatically or manually. Automatic ring forwarding is controlled by a timer that is set for individual MADN groups. The automatic version can also be preempted manually by an MBS end user by operating a feature key on the MBS. The MRFM version is activated by a feature key on the MBS. That feature key is associated in datafill with one or more MADN appearances on the MBS, which have the MRF feature. When the manual version is activated by the MBS end user, calls currently incoming to all MADN groups associated with the MRFM key have their ringing forwarded (assuming that the feature has not been previously activated on those calls).

This feature can be assigned to MADN SCA groups with or without bridging capability assigned. (Refer to “Enhanced MADN Call Control" for a description of the assignment of bridging to MADN groups.)

Call handling

When this feature is activated (either automatically or manually), only the currently active call(s) on the associated MADN group(s) that have not had this feature activated against them are affected. In other words, the following calls are not affected:

- subsequent incoming calls
- calls that already have MRF activated

Ring alerting options

When this feature is assigned to a MADN group, the following ring alerting options can be assigned to the individual appearances of the MADN:

- ALWAYS—The MADN appearance rings from the time the call completes in the MADN group until the time the call is answered or abandoned.
- NEVER—Calls completing on the MADN group never cause ring alerting for this appearance of the MADN.
- ABBReviated—The MADN appearance rings from the time the call completes on the MADN group until the time the call is answered or abandoned, or until MRF takes effect either automatically or manually.
- DELAYed—The MADN appearance begins ringing when MRF takes effect on the incoming call.

Feature keys

The MRF feature key appearance on an MBS and the list of MADNs with which the MRFM key is associated are specified in datafill. A single MRFM key on an MBS can be used to activate MRF for all MADN appearances on the set that have the MRF option. An MBS can have more than one MRFM key assigned, and the keylists for the different MRFM keys can overlap. Only one

MADN Ring Forward (continued)

MRFM key can be assigned that affects all MADN appearances on the set that have the MRF option.

Translations table flow

The MADN Ring Forward translations tables are described in the following list:

- Table KSETFEAT (Business Set and Data Unit Feature) lists the line features assigned to business sets and data units. This feature adds line feature MRFM. This feature is a keylist feature. MRFM is assigned through SERVORD, which prompts for a list of keys on the set that applies to this feature.
- Table MDNGRP (Multiple Appearance Directory Number Group) contains one tuple for each MADN group for which at least one member has been datafilled. This table identifies the MADN Ring Forward option, and, if automatic, the MRFTIMER (MADN ring forward) is also assigned. Table MDNGRP is datafilled when the MRF feature is assigned in SERVORD.
- Table MDNMEM (Multiple Appearance Directory Number Member) contains the specific ringing type when MRF is assigned in Table MDNGRP. The ringing types are ALWAYS, NEVER, DELAY, or ABBR. This table is datafilled when the MRF feature is assigned in SERVORD.

Table MDNGRP and Table MDNMEM are change-only tables; tuples cannot be added to or deleted from these tables. Tuples are automatically created when an entry is made in Table IBNLINES (IBN Line Assignment) or in Table KSETLINE (Business Set and Data Unit Line Assignment) with format MDN. In addition, tuples can be automatically created by using the Service Order System (SERVORD) if an entry for that MADN group does not already exist. (Refer to “Enhanced MADN Call Control" for a more complete description of Table MDNGRP. Refer to “CFW for MADN Secondary Members" for a more complete description of Table MDNMEM.)

The MADN Ring Forward translations process is shown in the following flowchart. The flowchart and data show the assignment of the MRF and MRFM features through SERVORD and the specific information in the tables that apply to these features.

MADN Ring Forward (continued)

Table flow for MADN Ring Forward

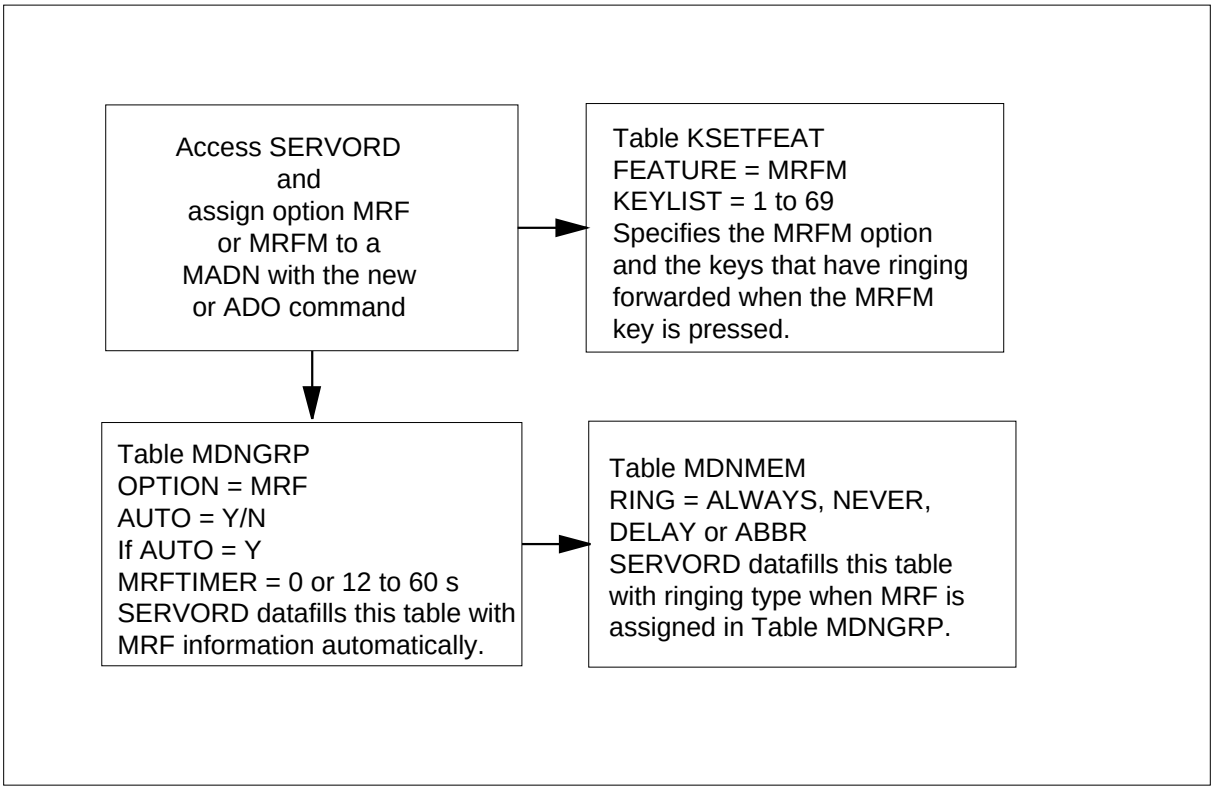

The following table lists the datafill content used in the flowchart.

Datafill example for MADN Ring Forward

Datafill table	Example data
MDNGRP	919 5552004 4 SCA TONE N (MRF Y 12) $
MDNMEM	HOST 00 0 00 04 1 5552004 Y ABBR $
KSETFEAT	HOST 00 0 00 04 1 MRFM MRFM $

Limitations and restrictions

The following limitations and restrictions apply to MADN Ring Forward:

- MRF cannot be applied to extension bridging (EXB) MADN groups or to multiple call arrangement (MCA) MADN groups; this feature only applies to SCA MADN groups.
- MRF cannot be deleted until all members have been assigned ring types of ALWAYS or NEVER in Table MDNMEM.

MADN Ring Forward (continued)

- Manual activation of MRF is supported only for key access, and is not supported by a 500/2500 set even though the set can be an appearance of the MADN group assigned the MRF feature.
- The keylist associated with an MRFM key can include any keys on a MADN that have this feature, regardless of the ringing option assigned to those particular MADN appearances. MADN appearances with the DELAY ringing option can be associated with an MRFM key. If the MRFM key is datafilled, operation of the key can cause the end user's set to start ringing (on the DELAY MADN appearances.) In other words, this key does not necessarily “push" ringing away from the activating set. In fact, the MRFM key can be datafilled to “pull" ringing to the activating set, if desired, by associating the key with DELAY MADN appearances on the set.
- Dialed code manual activation of MRF is outside the scope of this feature and is not supported. Also, it is not possible for a feature key to be assigned to a 500/2500 set or for an end user to manually activate MRF even if the set is an appearance of a MADN with MRF assigned.
- It is possible to datafill a configuration in which the combination of parts is invalid though individual parts are valid.
- A MADN group can be designated as having MRFM without designating any associated key. If none of the MBSs on which the MADN group members appear have an MRFM key associated with that MADN group, MRF never takes effect for that MADN group.
- For a MADN group with MRF, only the appearances with ringing options ALWAYS and ABBR ring at the beginning of the call. If none of the MADN appearances have ALWAYS or ABBR ringing options, the incoming call does not ring any set in the MADN group until MRF takes effect. If MRF never takes effect (as in the preceding example), the call never rings any appearance of the MADN.
- MRFM can be linked to MADN groups that do not have MRF ringing options assigned. When the MRFM key is pressed, a DFIL621 log is produced and the ringing state of a call does not change. The log indicates that no MRF ringing options are assigned to the MADNs of the LEN for the MRMF set.
- For a MADN group with MRF, only the MADN group members with ringing options DELAY or ALWAYS receive ringing after MRF takes effect. If none of the MADN group members have ALWAYS or DELAY ringing options, and if MRF is activated (automatically or manually), the call stops ringing, although it is still present on the MADN.

Interactions

MADN Ring Forward does not have any direct interactions with other MDC features nor does it affect the calls terminating on the MADN group. It only affects appearances in the group that receive ring alerting to announce the terminating calls. Two examples, discussed in detail here, are the Call Forwarding Don't Answer and Make Set Busy features.

Call Forwarding Don't Answer (CFD)

If the MADN group has CFD, terminating calls are forwarded based on the CFD timer and whether the MADN group has the MRF feature. If the MADN group has both CFD and MRF, and the MRF timer is set equal to or longer than the CFD timer, MRF is never activated automatically because the call is forwarded by CFD. If the MRF timer is shorter than the CFD timer, an unanswered incoming call has its ringing forwarded when the MRF timer expires, and then the call itself is forwarded by CFD when the CFD timer elapses.

If a MADN group has MRF and CFD, the timers for those features should not be set to identical values. If the timers are set to the same value, the operation of the two features can appear to be erratic to the end users. For example, if MRF is activated first, the DELAY ringing members can get a very brief ring splash, truncated by subsequent CFD activation. On the other hand, if CFD is activated first, the DELAY ringing members never receive ringing. This mode of operation appears to be defective to the end users, but the actual problem is that the timers should not be datafilled to identical values.

Make Set Busy (MSB)

When the MSB feature is activated for a set, ringing for that MBS is blocked. So, if MSB is active on an MBS, no calls terminating on the MBS cause it to receive ring alerting, regardless of the ring option assigned to any MADN group members on the set.

Activation/deactivation by the end user

The MRF feature can be activated either automatically or manually. When a MADN group is designated for manual MRF, only manual activation can access MRF for that group. When a MADN group has automatic MRF assigned, MRF can be activated either automatically or manually. This interaction results in the following three varieties of activation:

- AUTOmatic. The MADN is designated for automatic MRF (AUTO MRF) when the timer associated with the MADN group expires.
- AUTO override. The MADN is designated for automatic MRF (AUTO MRF), and an MBS end user (with an appearance of the MADN and with

MADN Ring Forward (continued)

an associated feature key on his or her MBS) presses the key before the timer associated with the MADN group elapses.

- MANUAL. The MADN is designated for MRFM, and an MBS end user (with an appearance of the MADN and with an associated feature key on his or her MBS) presses the MRFM key.

The timer used for AUTO MRF is assigned in datafill for each MADN group that has the AUTO MRF feature, and the time elapse can be 0 or 12 to 60 s. The ringing options for the appearances of the MADN (ALWAYS, DELAY, ABBR, and NEVER) are also set in datafill.

The MRFM feature key appearance on an MBS and the list of MADNs with which the key is associated are specified in datafill. A single key on an MBS can be used to activate MRF for all MADN appearances on the set with the MRF option. The MBS can have more than one MRFM key assigned, and the keylists for the different MRFM keys can overlap. Only one MRFM key is assigned that affects all MADN appearances on the set that have the MRF option.

Billing

MADN Ring Forward does not affect billing.

Station Message Detail Recording

MADN Ring Forward does not affect Station Message Detail Recording.

Datafilling office parameters

MADN Ring Forward does not affect office parameters.

Datafill sequence

The following table lists the tables that require datafill to implement MADN Ring Forward. The tables are listed in the order in which they are to be datafilled.

Note: These tables are datafilled through SERVORD; therefore, no datafill procedure or example is provided. Refer to “SERVORD" for an example of using SERVORD to datafill these tables.

Datafill tables required for MADN Ring Forward

Table	Purpose of table
MDNGRP	Multiple Appearance Directory Number Group. This table contain information associated with each multiple appearance directory number (MADN) group and for each member of a MADN group.
MDNMEM	Multiple Appearance Directory Number Member. This table contains the specific ringing type when MRF is assigned in Table MDNGRP.
KSETFEAT	Business Set and Data-Unit Feature. This table lists the line features that are assigned to the business sets and data units (DU) listed in table KSETLINE, and also the Meridian digital telephone sets and DUs listed in table IVDINV.

The MADN group does not appear in Table MDNGRP until a member of the group has been datafilled in Table IBNLINES or Table KSETLINE. When all members of a MADN group are deleted from Table IBNLINES and Table KSETLINE, the corresponding tuples in Table MDNGRP and Table MDNMEM are deleted automatically.

Before an appearance of the MADN can be assigned to the keylist of the MRFM, Table MDNGRP must be datafilled with the MRF option.

Translation verification tools

MADN Ring Forward does not use translation verification tools.

SERVORD

SERVORD is used to datafill tables MDNGRP, MDNMEM and KSETFEAT.

MADN Ring Forward (continued)

SERVORD limitations and restrictions

The following SERVORD limitations and restrictions apply to MADN Ring Forward:

- EBS Call Forwarding on a per Key Basis can be assigned to a MADN group when the first member of that group is created using SERVORD.
- MRFM can be assigned to keys on an MBS using SERVORD.
- Both options, MRF and MRFM, can be manipulated with the SERVORD commands NEW (establish service), ADO (add option), CHF (change feature information for preexisting feature), and DEO (delete option).
- MRF can only be assigned to MADN groups of type SCA.
- Option MDN must be assigned to a line before option MRF is assigned.
- Option MRF must be assigned to a MADN group before the system prompts the end user for the new field MRF_RING. The system prompts the end user for MRF_RING when new members are added to a MADN group that has been assigned MRF. This field overrides the RING field prompted with the MDN option.
- Every member of the MADN group must have ring type ALWAYS or NEVER before the MRF option can be removed with the DEO command. A ring type of NEVER cannot be assigned to the primary member of a MADN group if that member is on a 500/2500 set.

SERVORD prompts

The following table shows the SERVORD prompts used to assign EBS Call Forwarding on a per Key Basis to an existing line.

SERVORD prompts for MADN Ring Forward (Sheet 1 of 2)

Prompt	Valid input	Explanation
DN_OR_ LEN	7-digit DN or LEN	Specifies the 7-digit DN or LEN of the line to be changed. Enter the DN or LEN.
OPTKEY	1 to 69	Indicates the key on an MBS to which an option is assigned. Enter a value from 1 to 69.
OPTION	MRF, MRFM	Indicates the name of the option. Enter MRF, MRFM.
AUTO	Y, N	Indicates automatic forward ringing for MDN. Enter Y or N.
Note: Tables MDNGRP, MDNMEM, and KSETFEAT are automatically datafilled when MADN Ring Forward is assigned using SERVORD.		

MADN Ring Forward (continued)

SERVORD prompts for MADN Ring Forward (Sheet 2 of 2)

Prompt	Valid input	Explanation
KEYLIST	1 to 69	Specifies the key numbers of the DNs to which an option applies. Enter a value from 1 to 69.
MRF_TIMER	0, and 12 to 60 seconds	Specifies the time for the MDN ring forward timer. Enter a 0, and 12 to 60 seconds.
MRF_RING	ALWAYS, NEVER, ABBR, DELAY	Specifies how MDN ring forward is treated. Enter ALWAYS, NEVER, ABBR, or DELAY.
Note: Tables MDNGRP, MDNMEM, and KSETFEAT are automatically datafilled when MADN Ring Forward is assigned using SERVORD.		

SERVORD example for adding MADN Ring Forward

The following SERVORD example shows how MADN Ring Forward is added to an existing SCA MADN line using the SERVORD ADO command. The group is assigned MRF. The system prompts the end user for the MRF_RING to assign special ringing to the MADN group member.

The ringing type specified by MRF_RING overrides the RING field normally associated with the MDN option. The value in the RING field must be set to Y in order for MRF_RING to be ALWAYS, ABBR, or DELAY. RING must be N for MRF_RING to be NEVER. (This only applies for 500/2500 sets when MDN and MRF are being added at the same time.)

MADN Ring Forward (continued)

SERVORD example for Assigning MADN Ring Forward to an existing SCA MADN line in prompt mode

```
>ADO
SONUMBER:     NOW  92  1  2 AM
>
DN_OR_LEN:
> 00 0 00 04
OPTKEY:
>1
OPTION:
> MRF
AUTO:
> Y
MRF_TIMER:
> 12
MRF_RING:
> ABBR
OPTKEY:
> $
```

SERVORD example for MADN Ring Forward in no-prompt mode

```
> ADO $ 00 0 00 04 1 MRF Y 12 ABBR $
```

The following service order example shows how option MRFM is assigned to an MBS key with the ADO command. The system prompts the end user for a keylist.

When option MDN is removed from a key, and that key was previously in an MRFM keylist, it is automatically removed from the MRFM keylist. If all keys are removed from the keylist, the entire MRFM key is removed from the MBS automatically. (This does not apply to MRFM keys that are datafilled with a "$.")

For the MRFM keylist, a key that is not a MADN key and a key that is a MADN key but is not assigned MRF are invalid keys. When MRFM keylists are being datafilled and an invalid key is entered, the valid keys are datafilled, and the following message is displayed:

```
* WARNING * SOME KEYS WERE NOT ADDED TO MRFM KEYLIST
```

Duplicate keys are not valid in an MRFM keylist. For each MBS, there can be only one global MRFM key, MRFM $.

MADN Ring Forward (end)

SERVORD example for Assigning MADN Ring Forward to an MBS key in prompt mode

```
>ADO
SONUMBER:     NOW  90  1  2 AM
>
DN_OR_LEN:
> 02 01 02 22
OPTKEY:
> 5
OPTION:
>MRFM
KEYLIST:
> 1
KEYLIST:
> 2
KEYLIST:
> $
OPTKEY:
> $
```

SERVORD example for MADN Ring Forward in no-prompt mode

```
>ADO $ 02 01 02 22 5 MRFM 1 2 $ $
```

Make Set Busy Except GIC

Ordering codes

Functional group ordering code: MDC00008

Functionality ordering code: not applicable

Release applicability

BCS25 and up

Prerequisites

To operate, Make Set Busy Except GIC has the following prerequisites:

- BAS Generic, BAS00003
- MDC MBS Minimum, MDC00007
- MDC Minimum, MDC00001

Description

Make Set Busy Except GIC provides for exceptions to the Make Set Busy (MSB) feature on a keyset. This feature allows the end user to continue to receive Group Intercom (GIC) calls while the MSB feature is activated. It also allows the end user to continue to receive calls on certain directory numbers (DN) while the MSB feature is activated. Without this feature, the activation of MSB causes all incoming calls to receive busy tone or other treatment.

> ***Note:*** The term *keyset* refers to a telephone that has DN keys, feature keys, and lamps, for example, the Meridian Business Set (MBS).

This feature provides for the following types of MSB:

- MSB in which GIC calls are exempt from MSB
- MSB that includes certain DNs but allows calls to terminate on other DNs

Key-activated MSB and code-activated MSB interact. After you activate MSB on selected (possibly all) DNs by pressing the MSB key, you can use MSB activation and deactivation codes to alter the MSB configuration on your keyset.

The MSB lamp indicates that at least one DN is in the MSB state. Without Make Set Busy Except GIC, the MSB lamp indicates that all DNs are in the MSB state. Both key-activated and code-activated MSB can update the lamp.

Make Set Busy Except GIC (continued)

Operation

Exempting GIC calls from MSB

The system administrator can designate an intercom group to be exempt from MSB either by datafilling field IGNORMSB in Table KSETLINE (Business Set and Data Unit Line Assignment) or by using the ADO (add option) command in the Service Order System (SERVORD).

If field IGNORMSB in Table KSETLINE is set to Y, GIC calls in the intercom group override MSB. That is, GIC calls terminate normally, regardless of whether MSB is activated.

Changing the value of field IGNORMSB for any member of an intercom group changes the MSB exemption for the entire group.

The following figure shows how a keyset with GIC MSB exemption interacts with the MSB feature.

Make Set Busy Except GIC (continued)

GIC MSB exemption

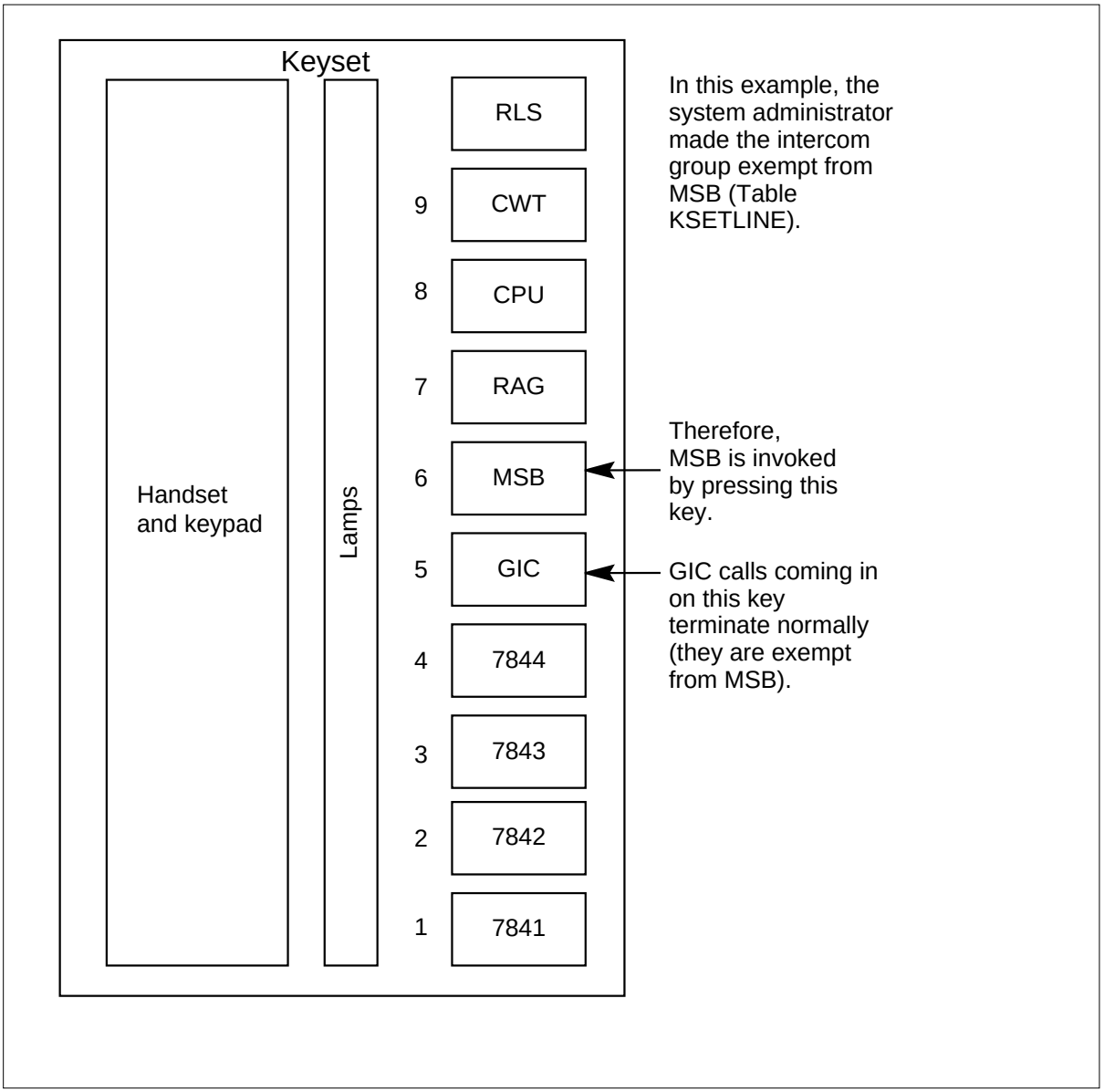

Selecting DNs for MSB

The system administrator can designate a subset of DN keys on a keyset that are to be affected by MSB. Field KEYLIST in Table KSETFEAT (Business Set and Data Unit Feature) contains a list of those DN keys that are included in MSB when MSB is activated. Incoming calls that terminate on these DNs receive busy tone during MSB. Incoming calls that terminate on other DN keys complete. SERVORD can also be used to datafill the MSB keylist.

Make Set Busy Except GIC (continued)

The following figure shows an example of MSB when a subset of the DN keys are selected for MSB.

MSB subset of the DN keys x

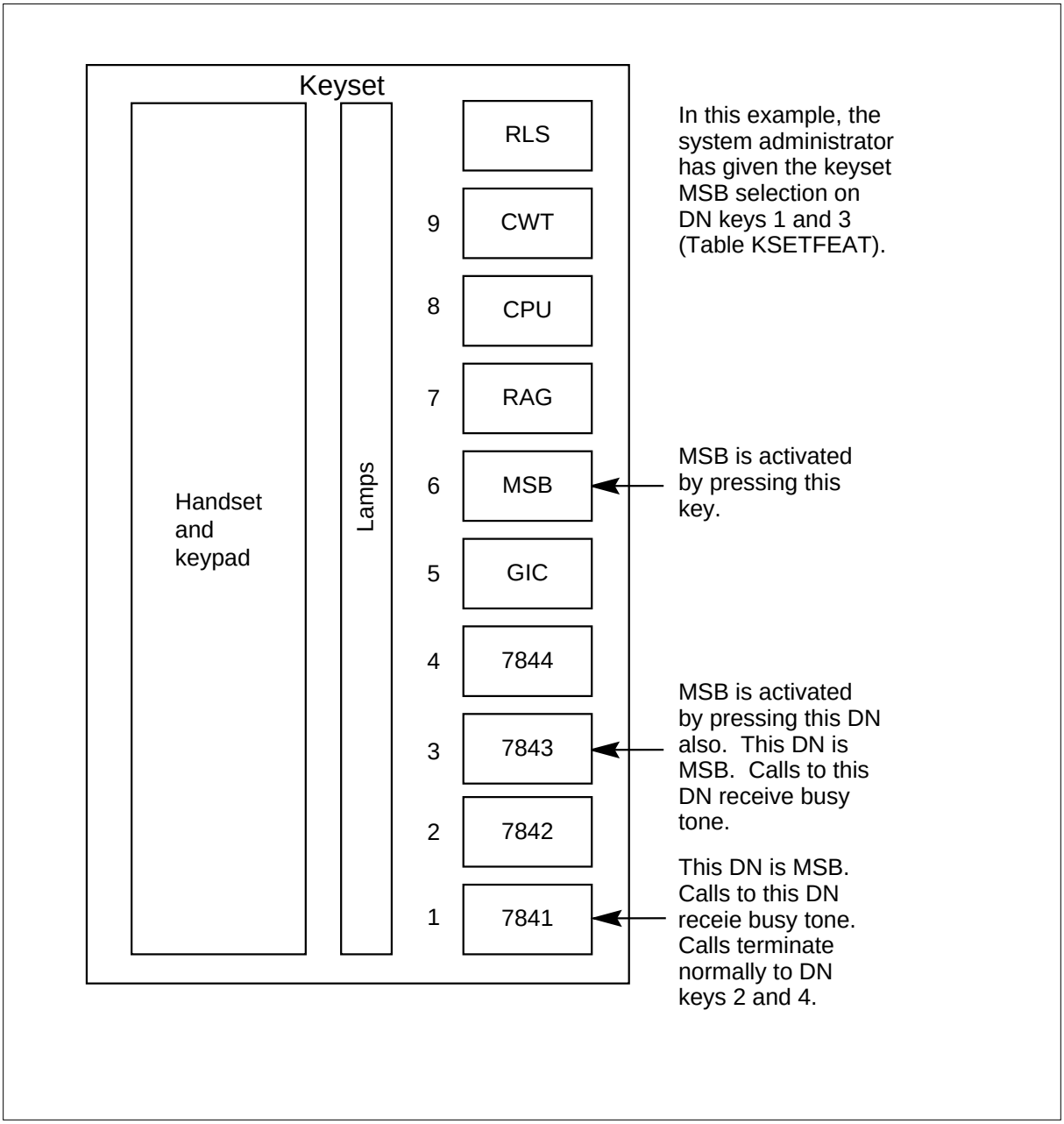

Make Set Busy Except GIC (continued)

Translations table flow

The Make Set Busy Except GIC translations tables are described in the following list:

- Table KSETFEAT (Business Set and Data Unit Feature) lists the line features assigned to business sets and data units. The MSB feature is assigned to a specific key (field FEATKEY, subfield KEY), and field KVAR, subfield KEYLIST specifies the DNs to be included when MSB is activated by the end user. The MSB feature and datafill for this table are assigned through SERVORD.
- Table KSETLINE (Business Set and Data Unit Line Assignment) defines the business set and data unit numbers supported by the switch and the hardware options assigned to each. The GIC feature is assigned to a specific key (field KSETKEY, subfield KEY), and field DNRESULT, subfield IGNORMSB, if set to Y, specifies that GIC is exempt from MSB when the feature is activated by the end user. The GIC feature and datafill for this table are assigned through SERVORD.

The Make Set Busy Except GIC translations process is shown in the flowchart in the following figure. The flowchart and data show the MSB and GIC features assigned to the business set through SERVORD and the specific information for the DNs included in MSB activation and whether GIC is exempt from MSB.

The Make Set Busy Except GIC translations tables are described in the following flowchart:

Make Set Busy Except GIC (continued)

Table flow for Make Set Busy Except GIC

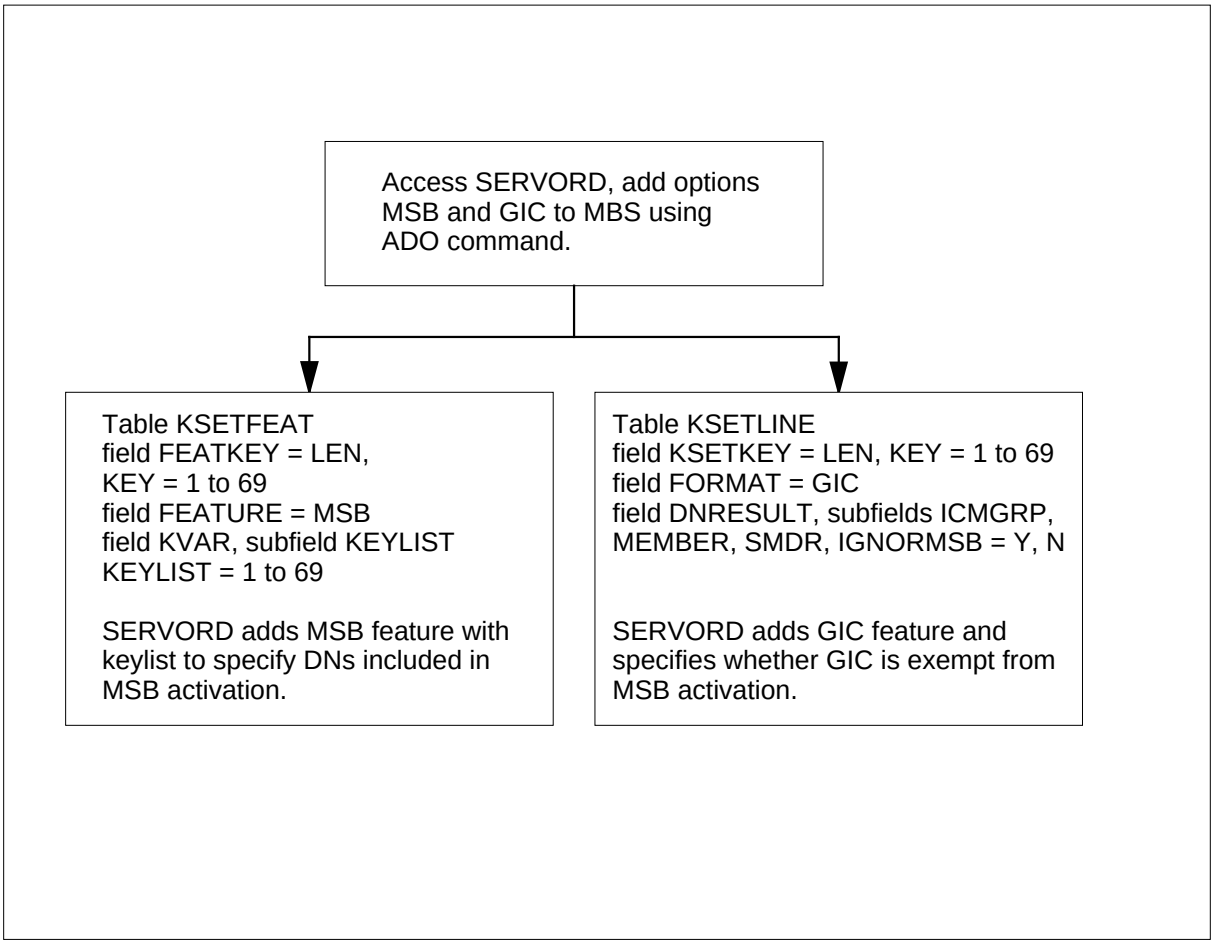

The following table lists the datafill content used in the flowchart.

Datafill example for Make Set Busy Except GIC (Sheet 1 of 2)

Item	Example data
LEN and key for MSB	HOST 02 0 00 13 5
DNs (keylist) for MSB activation	1,3
LEN and key for GIC	HOST 02 0 00 13 8
Datafill table	Example data

Make Set Busy Except GIC (continued)

Datafill example for Make Set Busy Except GIC (Sheet 2 of 2)

Item	Example data
KSETFEAT	HOST 02 0 00 13 5 MSB MSB N (1) (3) $
KSETLINE	HOST 02 0 00 13 8 GIC GICGRP1 3 N Y

Limitations and restrictions

The following limitations and restrictions apply to Make Set Busy Except GIC:

- Make Set Busy Except GIC applies only to keysets; that is, sets with various DN and feature pushbutton keys. Only keysets with an MSB key are affected by this feature.
- MSB and Uniform Call Distribution (UCD) are incompatible.
- MSB and Automatic Call Distribution (ACD) are incompatible. Attempts to exclude an ACD agent position (a keyset with an ACD INCALLS key) from MSB are blocked by datafill. Similarly, attempts to convert a non-ACD DN to an ACD INCALLS key are denied when MSB selections are applied to the set.
- Attempts to select feature keys or other non-DN keys for MSB are denied.
- The SERVORD CHF (change feature information for preexisting feature) command cannot be used for the GIC option.

Interactions

The following paragraphs describe the interactions between Make Set Busy Except GIC and other functionalities.

GIC exemption and DN NSB selection

GIC exemption always takes precedence over DN selection. This means that if the end user has GIC MSB exemption in Table KSETLINE, the GIC line is always exempt, regardless of DN MSB selection datafill in Table KSETFEAT. If GIC MSB exemption is removed, the system administrator can still use DN MSB selection (Table KSETFEAT) to exclude the GIC line from MSB.

MSB selection with ACD, MADN, and KSH

MSB and ACD are incompatible. Make Set Busy Except GIC interacts successfully with hunt groups, the Multiple Appearance Directory Number (MADN) feature, and the Key Short Hunt (KSH) feature. For hunt groups, a set that has been made busy does not stop a termination if the hunt DN appearance is not selected for MSB. A MADN can be exempted from MSB. The KSH feature terminates incoming calls on free DN appearances if the

original target DN appearance is unavailable. If KSH DNs are exempted from MSB, they can accept incoming calls even while MSB is active.

Activation/deactivation by the end user

Activation/deactivation of Make Set Busy Except GIC by the end user

At your telephone:

1 Press the MSB key to activate MSB.

Response:

When the MSB key is pressed, the two DNs selected by the MSB entry in Table KSETFEAT, keys 1 and 3, are made busy. The other DNs can still terminate incoming calls.

2 Code deactivate MSB on key 3 (7843):

Press DN key 3 and dial the code to deactivate MSB.

Response:

This removes MSB from the 7843 DN so that calls can now terminate there. Because key 1 is still MSB, the MSB lamp associated with the MSB key remains lit.

3 Code deactivate MSB on key 1 (7841):

Press DN key 1 and dial the code to deactivate MSB.

Response:

Because the entire set is now free from MSB, the MSB lamp turns off.

4 Code activate MSB on key 2 (7842):

Press DN key 2 and dial the code to deactivate MSB.

Response:

Because MSB is now active on at least one DN, the MSB lamp turns on.

5 Code activate MSB on key 1 (7841):

Press DN key 1 and dial the MSB activation code.

Response:

DNs 7841 and 7842 (keys 1 and 2) are now MSB and deny terminations. DNs 7843 and 7844 (keys 3 and 4) are not MSB and allow terminations.

6 Press the MSB key to deactivate MSB.

Response:

Since MSB is active for at least one DN, pressing the MSB key deactivates MSB for all DNs. The MSB lamp turns off.

7 Press the MSB key to activate MSB.

Response:

Since MSB is off on all DNs, pressing the MSB key activates MSB on the selected DNs 7841 and 7843 (keys 1 and 3). The MSB lamp turns on.

Make Set Busy Except GIC (continued)

Billing

Make Set Busy Except GIC does not affect billing.

Station Message Detail Recording

Make Set Busy Except GIC does not affect Station Message Detail Recording.

Datafilling office parameters

Make Set Busy Except GIC does not affect office parameters.

Datafill sequence

The following table lists the tables that require datafill to implement Make Set Busy Except GIC. The tables are listed in the order in which they are to be datafilled.

Note: These tables are datafilled through SERVORD; therefore, no datafill procedure or example is provided. Refer to “SERVORD" for an example of using SERVORD to datafill these tables.

Datafill tables required for Make Set Busy Except GIC

Table	Purpose of table
KSETLINE	Business Set And Data-Unit Line Assignment Table. This table contains the directory number appearances for business sets and data units.
KSETFEAT	Business Set and Data Unit Feature Table. This table lists the line features that are assigned to the business sets and data units (DU) listed in table KSETLINE, and also the Meridian digital telephone sets and DUs listed in table IVDINV.

Translation verification tools

Make Set Busy Except GIC does not use translation verification tools.

SERVORD

The Service Order System (SERVORD) can be used to add the MSB and GIC options to a line using the ADO (add option) command.

The CHF (change feature information for preexisting feature) command can be used to change the keylist for MSB. The CHF command cannot be used to change GIC parameters.

When the MSB option is added to a line, the DMS switch prompts for KEYLIST. The end user can enter up to 24 key numbers at this prompt (entering a dollar sign [$] indicates the end of the keylist). The keys entered must be DN keys. When the end user activates the MSB feature, MSB includes

Make Set Busy Except GIC (continued)

all DNs in the keylist. Any DNs that are not in the keylist are still available (not busy) during MSB.

If a dollar sign ($) is the only entry in the keylist, all DNs will be MSB.

When the GIC option is added to a line, the DMS switch prompts for GICNOMSB. The end user can enter Y or N at this prompt. Entering Y indicates that the group intercom is exempt from MSB. Entering N indicates that the group intercom is not exempt from MSB.

For intercom groups that already exist, the default value is N. If the intercom group did not previously exist, the default value is the current value for the group.

SERVORD limitations and restrictions

Make Set Busy Except GIC has no SERVORD limitations and restrictions.

SERVORD prompts

The following table shows the SERVORD prompts used to assign Make Set Busy Except GIC to an existing line.

SERVORD prompts for Make Set Busy Except GIC (Sheet 1 of 2)

Prompt	Valid input	Explanation
DN_OR_LEN	7-digit DN or LEN	Specifies the 7-digit DN or LEN of the line to be changed. Enter the DN or LEN.
OPTKEY	1 to 69	Indicates the key on an MBS to which an option is assigned. Enter a value from 1 to 69.
OPTION	MSB, GIC	Indicates the name of the option. Enter MSB or GIC.
KEYLIST	1 to 69	Specifies the key numbers of the DNs to which an option applies. Enter a value from 1 to 69.
GICNAME	Any name, up to 8	Indicates the name for the group intercom line. Enter a name of up to 8 characters.
GICMEMNO	Any number, up to 4 digits	Specifies the digits dialed to reach a line. Enter up to a 4 digit number.
Note: Tables KSETLINE and KSETFEAT are automatically datafilled when Make Set Busy Except GIC is assigned using SERVORD.		

Make Set Busy Except GIC (continued)

SERVORD prompts for Make Set Busy Except GIC (Sheet 2 of 2)

Prompt	Valid input	Explanation
GICSMDR	Y, N	Indicates whether SMDR records are required. Enter Y or N.
GICNOMSB	Y, N	Indicates whether group intercom calls are exempted from MSB. Enter Y or N.
Note: Tables KSETLINE and KSETFEAT are automatically datafilled when Make Set Busy Except GIC is assigned using SERVORD.		

SERVORD example for adding Make Set Busy Except GIC

The following service order example shows how MSB is added to a line using the ADO command. The KEYLIST contains keys 1, 3, and 4, meaning that these DNs will be included in MSB.

SERVORD example for Make Set Busy Except GIC in prompt mode - Adding MSB to an existing line using SERVORD

```
>ADO
SONUMBER:    NOW 87 10 10 PM
>
DN_OR_LEN:
> 2 1 2 22
OPTKEY:
> 5
OPTION:
> MSB
KEYLIST:
> 1
KEYLIST:
> 3
KEYLIST:
> 4
KEYLIST:
> $
OPTKEY:
> $
```

SERVORD example for Make Set Busy Except GIC in no-prompt mode

```
> ADO $ 2 1 2 22  5 MSB 1 3 4 $ $
```

Make Set Busy Except GIC (end)

The following example shows how the GIC option is added to a line using the ADO command. The value N is entered at the GICNOMSB prompt. This means that GIC is not exempt from MSB.

Adding GIC to an existing line using SERVORD

```
>ADO
SONUMBER:    NOW 87 10 10 PM
>
DN_OR_LEN:
>2 1 2 11
OPTKEY:
> 7
OPTION:
> GIC
GICNAME:
> GGRP01
GICMEMNO:
> 23
GICSMDR:
> N
GICNOMSB:
> N
OPTKEY:
> $
```

SERVORD example for Make Set Busy Except GIC in no-prompt mode

```
>ADO $ 2 1 2 11 7 GIC GGRP01 23 N N $
```

Music on Hold for EBS

Ordering codes

Functional group ordering code: MDC00008

Functionality ordering code: not applicable

Release applicability

NA011 and up

Prerequisites

To operate, Music on Hold for EBS has the following prerequisites:

- BAS Generic, BAS00003
- MDC MBS Minimum, MDC00007
- MDC Minimum, MDC00001

Description

Music on Hold for EBS provides music on hold for calls that terminate on Meridian business sets (MBS). When a call is on hold, the caller hears music, announcements, silence, or a combination of the three treatments.

Music on Hold for EBS provides for music on a customer group basis or on a per set basis within a customer group.

Option LMOH (Line Music on Hold) defines multiple audio sources across one customer group. The assignment of option LMOH is made through the Service Order System (SERVORD). The assignment of option LMOH appears in table KSETFEAT (Business Set and Data Unit Feature). The assignment of option LMOH to a business set with option KSMOH defines a music source for the line. The customer group audio source applies for option KSMOH if the assignment of option LMOH is not on the line. Table CUSTSTN (Customer Group Station Option) identifies the audio source for a customer group.

The default audio source in table CUSTSTN applies in the cases that follow:

- Assignment of option LMOH is on a line, but no entry for LMOH audio group is input in table AUDIO.
- Option LMOH is not on a line.

Operation

A business set end user places a call on hold or autohold (automatic hold). The called party connects to an audio source and hears music, announcement,

silence, or a combination of the three treatments. The announcement treatment includes ringback tone or silence. The called party hears ringback tone or silence until the start of the announcement cycle. The data input describes the number of cycles in the announcements. For the music treatment, the party on hold hears continuous music until acknowledgment or disconnect of the call on hold.

Audio sources are input by the operating company in table AUDIO (Audio Interlude). The call connects on the DN line when the end user takes the call off hold,

For a call between parties A and B, the following terminology describe a call:

- Party A presses the HOLD key to place party B on *hold*.
- Party A places party B on *autohold* by accessing another DN key on the set, pressing the call waiting (CWT) key, or pressing the three-way calling (3WC) key.

The *holder* is the line on the business set that places the call on hold or autohold. The *holdee* is the trunk or line that is placed on hold by the holder.

Basic two-party call

When, while in the talking state of a basic two-party call, the holder places the holdee on hold or autohold, an end user-defined audio source is connected to the holdee.

To remove a caller from hold, the holder presses the DN key associated with the held call. The call is then reestablished.

Since a call must be active on the business set before a business set end user can release a call, the holder cannot disconnect the call while the music on hold feature is active.

Translations table flow

The Music on Hold for EBS translations process is shown in the flowchart in the following figure. The flowchart and data show the preliminary tables (tables AUDIO and CUSTSTN) and assignment of Music on Hold for EBS through SERVORD. The specific information for Music on Hold for EBS must be identified in tables AUDIO and CUSTSTN prior to assignment of the feature to individual telephones. The individual MBS information is added to table KSETINV when Music on Hold for EBS assignment is made through SERVORD.

Music on Hold for EBS (continued)

The Music on Hold for EBS translations tables are described in the following list:

- Table AUDIO (Audio Interlude) specifies the type of broadcast made up of announcement, music, silence, ringing, repeat, or combination that is given for certain features associated with MDC. Field AUDIOKEY specifies in subfields GROUP and FTRINDEX the audio group and Music on Hold for EBS feature. Field CHOICE specifies the audio interlude given for the Music on Hold for EBS feature.
- Table CUSTSTN (Customer Group Station Option) contains customer group data for station-dependent features and is required for a switching unit with MDC features. Option KSMOH in Table CUSTSTN allows music on hold to be associated with a customer group and then assigned to individual business sets. Option KSMOH is assigned in fields OPTNAME and OPTION, and subfield ANNMUSIC is set to Y to prompt for subfield AUDIOGRP (audio group). Subfield AUDIOGRP specifies the name to access Table AUDIO for specific audio interlude for Music on Hold for EBS
- Table KSETINV (Business Set and Data Unit Inventory) defines the business set and data unit inventory data. In this table option KSMOH is added to subfield OPTION when this feature is assigned to an MBS through SERVORD.
- Table KSETFEAT (Business Set and Data Unit Feature) defines the business set and data unit features. Option LMOH allows multiple music sources for MBSs with KSMOH.

The Music on Hold for EBS translation process is shown in the flowchart that follows.

Music on Hold for EBS (continued)

Table flow for Music on Hold for EBS

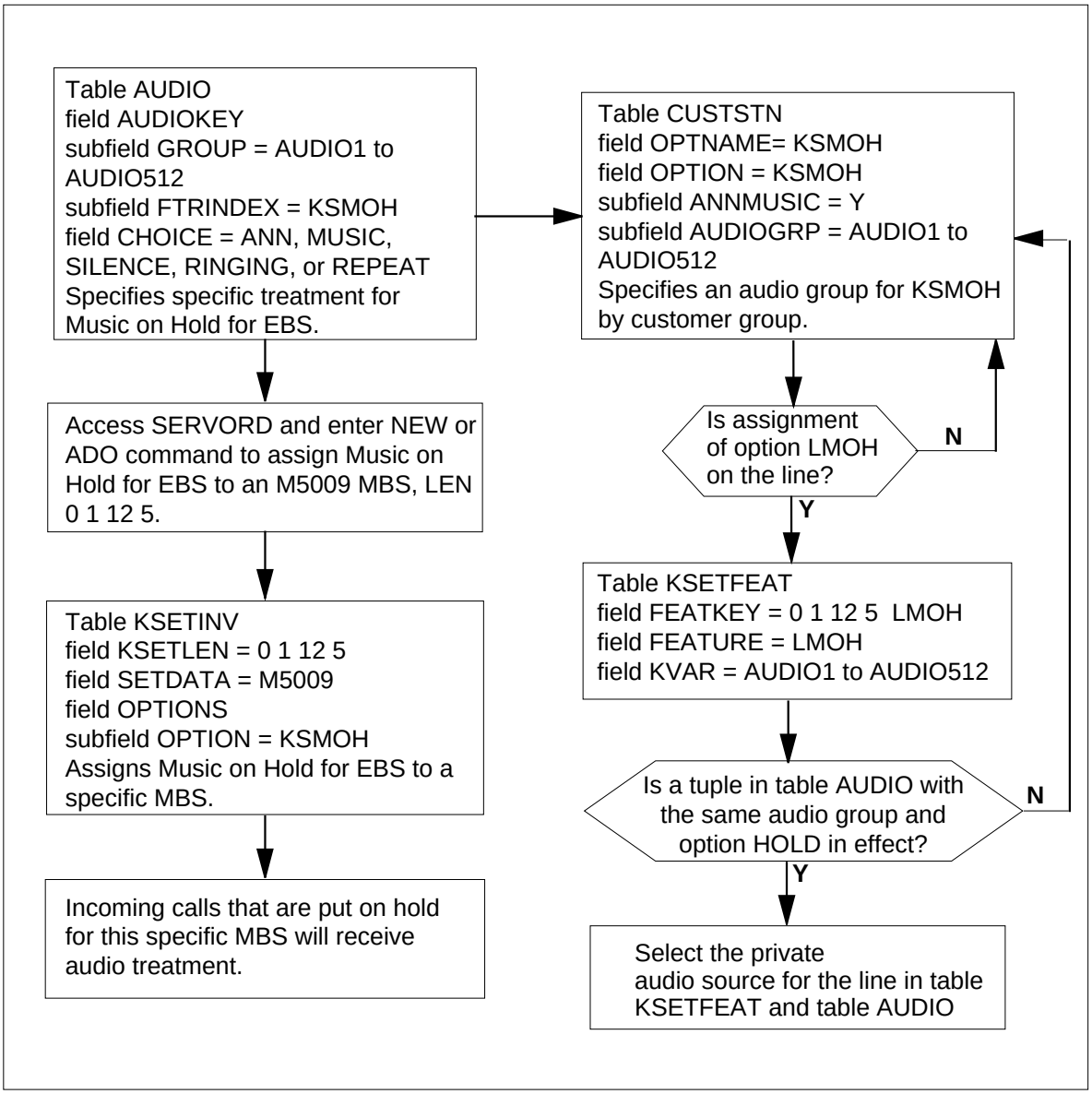

The following items show example data for Music on Hold for EBS:

- LEN for end user - 00 1 125
- Feature assigned - KSMOH

Music on Hold for EBS (continued)

The following table lists the datafill content used in the flowchart.

Datafill example for Music on Hold for EBS

Datafill table	Example data
AUDIO	AUDIO1 KSMOH MUSIC CWMUSICCLLI 1 $AUDIO2 KSMOH MUSIC RRMUSICCLLI 5 $
CUSTSTN	MDCGRP1 KSMOH KSMOH AUDIOGRP1
KSETINV	00 1 12 5 M5009 KSMOH
KSETFEAT	00 1 12 5 LMOH LMOH AUDIOGRP2

Limitations and restrictions

The following limitations and restrictions apply to Music on Hold for EBS:

- Option KSMOH cannot be assigned to a Meridian asynchronous voice and data option (MADO) integrated voice and data (IVD) set.
- Option KSMOH can be assigned to all types of Meridian business sets with the exception of ISDNKSET, PDATA, and DATA sets.
- Audio from the Music on Hold for EBS cannot be connected to data sets (MADO, DATA, and PDATA).
- The maximum number of sets in a customer group that can simultaneously supply audio using the music on hold feature is 1020.

Interactions

The following paragraphs describe the interactions between Music on Hold for EBS and other functionalities.

The following features interact with Music on Hold for EBS:

- Attendant Busy Verify Line (BVL)

  Music on Hold for EBS does not interact with BVL. If a two-party call is placed on hold and the held party is receiving audio from Music on Hold for EBS, the attendant cannot use the BVL feature to check whether one of the lines is active on a call.

- Attendant Console

  Music on Hold for EBS does not support any attendant console interactions. Therefore, Music on Hold for EBS does not supply audio when an attendant console is involved in a call. In addition, if an attendant console becomes involved in a call in which Music on Hold for EBS is supplying audio, the audio is removed.

Music on Hold for EBS (continued)

- Automatic Call Distribution (ACD)

  Music on Hold for EBS provides audio for ACD calls in the following manner:

  — CD INCALLS key

  If an ACD agent has a call active on the INCALLS key and places the call on hold, the holdee receives audio provided that the call is a two-party call. The audio stops when the call is reestablished or the holdee goes on-hook.

  — ACD observe (OBS) key

  If a supervisor has pressed the OBS key in order to observe an ACD agent's call to an external party, and the ACD agent places the external party on hold, audio is not supplied to the external party. However, if the supervisor disconnects himself or herself from the call while the call is still being held, music is supplied to the external party as soon as the supervisor releases himself or herself from the call.

  In addition, if an agent has placed a call on hold, a supervisor is not allowed to observe that call using his or her OBS key until after the call is taken off hold.

  — Emergency key (EMK)

  Music on Hold for EBS is not broadcast to the caller if an agent is in conference with a supervisor or a recording device. The conference or recording device is on the EMK and a caller external to the ACD group.

  Likewise, if either the supervisor or external party places the call on hold, music is not supplied to the held parties.

  Call supervisor (CLSUP) key and answer agent key (AAK). Once a call is established using the CLSUP key and AAK, the call is treated like a basic two-party call. Therefore, Music on Hold for EBS functions as it would for a basic two-party call.

  — Call agent (CAG) key

  Once a two-party call is established using the CAG key, the call is treated like any basic two-party call. Therefore, Music on Hold for EBS functions as it would for a basic two-party call.

  — Caller holds ACD agent

  If an ACD agent is active on a call with a party external to the ACD group and that party puts the agent on hold, the call is treated as a basic two-party call.

  If a party calls an ACD group and no ACD agent is available, the caller is put in the incoming call queue. The caller can then place the call on

Music on Hold for EBS (continued)

hold. If an ACD agent then becomes available and answers the call, the agent does not receive music.

- Automatic Line (AUL)

  Once a call is established using AUL, the line is treated like a basic DN. Therefore, Music on Hold for EBS interacts with AUL in the same manner as for a basic two-party call.

- Call Park (PRK) and Directed Call Park (DPRK)

  PRK and DPRK provide the capability for audio to be supplied to parked calls. Therefore, Music on Hold for EBS does not supply audio to calls parked with these features.

  In addition, Music on Hold for EBS does not provide audio if the parked party activates the hold/autohold feature. Consider the following two examples:

  — Party A parks party B. Party B then presses the hold key. Party C then unparks party B.

  — Party A parks party B. Party B then presses the hold key. The parked call recalls to party A. Party A answers the recall.

  At the end of both examples, the party connected to party B is on hold. However, in neither case does Music on Hold for EBS provide music to the held party.

- Call Transfer (CXR)

  Music on Hold for EBS supplies audio to a transferred party while the transfer is taking place. The following three examples illustrate how Music on Hold for EBS interacts with call transfer:

  — Party A calls party B. Party B presses the CXR key in order to transfer party A to party C. Party A is connected to audio from the time party B dials party C's DN until the time party B presses the CXR key a second time to conference the call before pressing the release key.

  — Party A calls party B. Party B presses the CXR key and dials party C's DN to transfer party A to party C. Before party B presses the CXR key a second time, party B goes on-hook, releasing party C. Therefore, the call is not transferred. However, party A is connected to audio until party B reestablishes his or her call with party A or until party A goes on-hook.

  — Party A calls party B. Party A places party B on hold. Party B places party A on autohold by calling party C. Party B then transfers party A to party C. If party C answered the call before being transferred, he or she hears music, since party A still has him or her on hold. If at the time party C was transferred, he or she was still ringing, when party C

does answer the call, he or she hears music, since, again, he or she is being held by party A.

- Call Waiting (CWT)

  If, while active on a DN, a business set end user presses the CWT key to answer an incoming call, Music on Hold for EBS supplies audio to the party that is on autohold.

  Likewise, if the business set end user presses the original DN on which the end user was active, audio is supplied to the party that is on autohold on the CWT key.

  In addition, if the business set end user accesses another DN, thereby placing both the party on the original DN and the one on the CWT key on autohold, audio is supplied to both parties being held.

- Conference Calls

  If a conference call is placed on hold by the conference controller or one of the conferees in the conference, Music on Hold for EBS does not supply audio. This statement is true for any type of conference call.

  However, if the controller of a conference has add-on capability such that he or she can add another party to the conference by using the CONF key and can toggle between the add-on and conference legs of the call, the following statements apply:

  — When the controller presses the CONF key to dial the DN of an add-on party, thereby placing the conference on hold, Music on Hold for EBS does not supply audio to the conference.

  — When the controller flips to the conference leg of the call, thereby placing the add-on party on hold, Music on Hold for EBS supplies audio to the add-on party.

  — When the controller flips to the add-on leg of the call by pressing the CONF key, Music on Hold for EBS does not supply music to the conference leg.

  — The conference features with add-on capability that receive audio from Music on Hold for EBS are conference six to 30-port and meet-me conference.

- Directed Call Pickup Barge-in (DCBI)

  Music on Hold for EBS does not interact with DCBI. If a two-party call is placed on hold and the held party is receiving audio from Music on Hold for EBS, the call cannot be picked up using the DCBI feature.

- Executive Busy Override (EBO)

Music on Hold for EBS (continued)

Music on Hold for EBS does not interact with EBO. If a two-party call is placed on hold and the held party is receiving audio from Music on Hold for EBS, the call cannot be interrupted using the EBO feature.

- Group Intercom (GIC)

  Music on Hold for EBS does not supply audio for GIC calls that are placed on hold or autohold.

- Intercom (ICM)

  Music on Hold for EBS does not supply audio for intercom calls that are placed on hold or autohold.

- Malicious Call Hold (MCH)

  Music on Hold for EBS does not supply music to calls that are placed on hold using MCH.

- Multiple Appearance Directory Number (MADN)

  Music on Hold interacts with the following MADN options:

  — MADN Single Call Arrangement (SCA) with bridging

  If a MADN group member places a call on hold or autohold after a conference has been established using any of the MADN bridging features, Music on Hold for EBS does not supply audio to the held parties. In addition, if all but one held party goes on-hook while the call is still being held, Music on Hold for EBS still does not supply audio to the remaining party.

  — MADN Single Call Arrangement (SCA) without bridging

  If a MADN group member is active on a call with a party external to the MADN group and puts that party on hold, Music on Hold for EBS supplies audio to the holdee until the call is reaccessed by a MADN group member or until the holdee goes on-hook.

  — MADN Multiple Call Arrangement (MCA)

  If a MADN group member is active on a call with a party external to the MADN group and puts that party on hold, the call is treated as a basic two-party call. The call is treated in the same manner if the external party is the holder and the MADN member is the holdee.

  — External party holds call

  If a party external to a MADN group is involved in a call with one MADN group member and places that member on hold, Music on Hold for EBS supplies audio to that MADN group member until the call is

reestablished with the external party or the MADN group member goes on-hook.

If in the above scenario the MADN group member presses the privacy release key while still in the held state and another MADN group member conferences into the call, audio is removed.

If an external party is involved in a three-way call or multiparty call with MADN group members, including a two-party call that became a multiparty call through the privacy release option, if that external party places the call on hold, Music on Hold for EBS does not supply audio.

- Mutual Hold

  Mutual hold is the term used to describe the case where the holdee places the holder on hold or autohold.

  Assuming that both parties have Music on Hold for EBS, the following example shows what happens in the case of mutual hold.

  — Party A places party B on hold. Party B then receives music. Party B places party A on hold. Since both parties are being held, neither party receives music.

  — However, if party A takes party B off hold, party A receives music since he or she is being held by party B. Likewise, if party B takes party A off hold, party B receives music since he or she is being held by party A.

- Three-Way Calling (3WC)

  Music on Hold for EBS supplies audio while a three-way call is in the consultation phase, but not while the call is in the conference phase.

  Consider the following example: Party A and party B are in a basic two-party call. Party A presses the 3WC key to call party C. In this case, the call between parties A and B is considered the first leg of the call, and the call between parties A and C is considered the second leg. Party B receives audio from Music on Hold for EBS once party A has dialed party C's DN. In addition, if party A receives treatment because he or she dialed an invalid DN, a partial DN, or nothing, party B receives audio.

  Once party C has answered the call, party A presses the DN key associated with the first leg of the call, thereby placing the second leg on autohold. In

Music on Hold for EBS (continued)

this case, party B is disconnected from the audio source, and party C is connected to the audio source.

Party A can toggle between the first and second legs of the call, each time supplying audio to the holdee.

Once party A conferences the call, however, the interactions are no longer defined in this manner, but as follows:

— If a call involving more than two parties is put on hold by one of the parties in the call, audio is not supplied to the held parties. However, if one of the parties that was placed on hold goes on-hook, audio is supplied to the remaining party.

— In addition, audio is not supplied in the following scenario: Party A and party B are in a basic two-party call. Party A puts party B on hold, thereby supplying audio to party B. Party B then makes a call to party C and conferences him or her into the call with party A. Audio is no longer supplied since the call is in conference.

Activation/deactivation by the end user

Music on Hold for EBS requires no activation or deactivation by the end user.

Billing

Music on Hold for EBS does not affect billing.

Station Message Detail Recording

Music on Hold for EBS does not affect Station Message Detail Recording.

Datafilling office parameters

Music on Hold for EBS does not affect office parameters.

Datafill sequence

The following table lists the tables that require datafill to implement Music on Hold for EBS. The tables are listed in the order in which they are to be datafilled.

Datafill tables required for Music on Hold for EBS

Table	Purpose of table
AUDIO	Audio Interlude. This table defines the audio interlude broadcasts for Integrated Business Network (IBN) audio groups and features. The broadcasts include announcement, music, silence, or ringing,
CUSTSTN	Customer Group Station Option. This table is required for a switching unit with North American translations and the Meridian Digital Centrex (MDC) or Residential Enhanced Services (RES). This table lists the station options assigned to each of the customer groups.
KSETFEAT (Note)	Business Set and Data Unit Feature. This table lists the line features that are assigned to the business sets and data units (DU) listed in table KSETLINE, and also the Meridian digital telephone sets and DUs listed in table IVDINV.
KSETINV	Business Set and Data Unit Feature. This table contains business set and data unit feature data.
Note: This table is datafilled through SERVORD; therefore, no datafill procedure is provided.	

Datafilling table AUDIO

Table AUDIO (Audio Interlude) contains the audio interlude broadcasts that are provided for certain features pertaining to MDC.

The Music on Hold feature is controlled by the datafill in tables CUSTSTN, KSETINV, KSETFEAT, and AUDIO.

The Music on Hold feature for option KSMOH is input for the customer group in table CUSTSTN. Field AUDIOGRP prompts for the name of an audio group in table AUDIO with the assignment of option Music on Hold for EBS.

The assignment of option LMOH is on a line, but no entry for LMOH audio group is input in table AUDIO. Option LMOH is input to table KSETFEAT through SERVORD. The SERVORD prompt for option LMOH requests the audio group name. The audio group for option KSMOH allows the audio source for the line rather than the customer group audio source.

Table AUDIO must be datafilled with an audio interlude for Music on Hold for EBS. For each Music on Hold for EBS audio group, an audio route list containing up to four audio sources can be datafilled.

Music on Hold for EBS (continued)

The following table shows the datafill specific to Music on Hold for EBS for table AUDIO. Only those fields that apply directly to Music on Hold for EBS are shown. For a description of the other fields, refer to the data schema section of this document.

Datafilling table AUDIO

Field	Subfield	Entry	Explanation and action
AUDIOKEY		see subfields	Audio Key. This field consists of subfields GROUP and FTRINDEX.
	GROUP	AUDIO1 to AUDIO512	Group. This subfield specifies the audio group name. Enter an audio group name from AUDIO1 to AUDIO512.
	FTRINDEX	KSMOH	Feature Index. This subfield specifies the feature that requires a broadcast. Enter KSMOH.
CHOICE		ANN, MUSIC, SILENCE, RINGING, or REPEAT	Audio Choice. This field specifies the audio choice. Enter ANN for announcement, MUSIC for continuous music, SILENCE for absence of announcement or music, RINGING for ringing, or REPEAT to repeat a sequence.

Datafill example for table AUDIO

The following example shows sample datafill for table AUDIO.

MAP display example for table AUDIO

```
AUDIOKEY                                        CHOICE
_____________________________________________________________________
AUDIO1   KSMOH          (MUSIC CWMUSICCLLI 1) $
AUDIO2   KSMOH         (MUSIC RRMUSICCLLI 5)  $
```

Datafilling table CUSTSTN

Table CUSTSTN (Customer Group Station Option) contains the station options assigned to each customer group.

The Music on Hold feature is controlled by the datafill in tables CUSTSTN, KSETINV, KSETFEAT, and AUDIO.

To assign the music on hold feature, option KSMOH must be assigned to the customer group in table CUSTSTN. When Music on Hold for EBS is added

as an option, field AUDIOGRP prompts for the name of an audio group from table AUDIO.

In addition to table CUSTSTN, table KSETINV must be datafilled to assign music on hold to each individual business set. Table KSETINV is for Meridian business sets (MBS). Field OPTION in this table must be datafilled with option KSMOH.

The following table shows the datafill specific to Music on Hold for EBS for table CUSTSTN. Only those fields that apply directly to Music on Hold for EBS are shown. For a description of the other fields, refer to the data schema section of this document.

Datafilling table CUSTSTN

Field	Subfield	Entry	Explanation and action
OPTNAME		KSMOH	Option Name. This subfield specifies the option music on hold for the business set. Enter KSMOH.
OPTION		KSMOH	Option. This subfield specifies the option music on hold for the business set. Enter KSMOH.
	ANNMUSIC	Y or N	Announcement or Music. This subfield specifies if an announcement or music is given to the calling party if the business set end user puts the call on hold in the customer group that has option KSMOH. Enter Y if an announcement or music is giventoapartythatisonhold;otherwise,enterN. ***Note:*** If ANNMUSIC is set Y, subfield AUDIOGRP requires datafill.
	AUDIOGRP	see explanation	Audio Group. This subfield defines the audio to be played for all business sets in the customer group that have option KSMOH. Enter the name of a Music on Hold for EBS audio group (AUDIO1 to AUDIO512) from table AUDIO.

Datafill example for table CUSTSTN

The following example shows sample datafill for table CUSTSTN.

Music on Hold for EBS (continued)

MAP display example for table CUSTSTN

```
CUSTNAME   OPTNAME    OPTION
_________________________________________________________
MDCGRP1    KSMOH      KSMOH                    AUDIO1
```

Translation verification tools

Music on Hold for EBS does not use translation verification tools.

SERVORD

This feature adds line option KSMOH (keyset music on hold). The Service Order System (SERVORD) commands that can be used with this option are ADO (add option), DEO (delete option), and NEW (establish service). Option KSMOH can only be applied to key number 1. Music on Hold for EBS can be assigned to the following line class codes (LCC):

- M5009
- M5209
- M5112
- M5212
- M5312

SERVORD limitations and restrictions

Music on Hold for EBS has no SERVORD limitations and restrictions.

SERVORD prompts

The following table shows the SERVORD prompts used to assign Music on Hold for EBS to an existing line.

SERVORD prompts for Music on Hold for EBS

Prompt	Valid input	Explanation
DN_OR_LEN	7-digit DN or LEN	Specifies the 7-digit DN or LEN of the line to be changed. Enter the DN or LEN.
OPTKEY	1 to 69	Indicates the key on an MBS to which an option is assigned. Enter a value from 1 to 69.
OPTION	KSMOH	Indicates the name of the option. Enter KSMOH.
Note: Table KSETINV is automatically datafilled when Music on Hold for EBS is assigned using SERVORD.		

SERVORD example for implementing Music on Hold for EBS

The following SERVORD example shows how Music on Hold for EBS, using option KSMOH is added to a business set using the ADO command.

SERVORD example for Music on Hold for EBS, using option KSMOH in prompt mode

```
SO:
> ADO
SONUMBER: NOW 92 10 01 PM
>
DN_OR_LEN:
> 21315
OPTKEY:
> 1
OPTION:
> KSMOH
OPTKEY:
> $
```

SERVORD example for Music on Hold for EBS, using option KSMOH in no-prompt mode

```
> ADO $ 2 1 3 15 1 KSMOH $
```

The following SERVORD example shows how Music on Hold for EBS, using option KSMOH is deleted from a business set using the DEO command.

SERVORD example for Music on Hold for EBS, deleting KSMOH in prompt mode

```
SO:
> DEO
SONUMBER: NOW 92 10 01 PM
>
DN_OR_LEN:
> 21315
OPTKEY:
> 1
OPTION:
> KSMOH
OPTKEY:
> $
```

Music on Hold for EBS (continued)

SERVORD example for Music on Hold for EBS, deleting KSMOH in no-prompt mode

```
> DEO $ 2 1 3 15 1 KSMOH $
```

The following SERVORD example shows how Music on Hold for EBS using option KSMOH is applied to a new business set using the NEW command.

Note: Whereas any valid key number can be used for the KEY to create a new line using the NEW command, the OPTKEY must be 1 in order to add option KSMOH to the set of the new line.

Music on Hold for EBS (continued)

SERVORD example for Music on Hold for EBS applying KSMOH to a new business set in prompt mode

```
SO:
> NEW
SONUMBER:  NOW 93 2 12 PM
>
DN:
> 1234567
LCC:
> PSET
GROUP
> CUST1
SUBGRP:
> 0
NCOS:
> 0
SNPA:
> 123
KEY:
> 1
RINGING:
> Y
LATANAME:
> NILLATA
LTG:
> 0
LEN:
> 21315
OPTKEY:
> 1
OPTION:
> KSMOH
OPTKEY:
> $
```

SERVORD example for Music on Hold for EBS applying KSMOH to a new business set in no-prompt mode

```
> NEW  $ 1234567 PSET CUST1 0 0 123 1 Y NILLATA 0 2 1 3 15 1
KSMOH $
```

Music on Hold for EBS (end)

The SERVORD prompts that assign LMOH to a line with option KSMOH appear in the following table.

Prompt	Valid input	Explanation
OPTION	LMOH	Defines the option assignment to the line.
AUDIOGRP	AUDIO1 to AUDIO512	Defines the audio group name.

Note: The system enters data in table KSETFEAT when assignment of LMOH occurs with the use of SERVORD.

The addition of LMOH to a business set with option KSMOH is in the following SERVORD example.

SERVORD example for addition of option LMOH in prompt mode

```
SO:
> ADO
SONUMBER:   NOW 93 1 1 AM
>
DN_OR_LEN:
> 0 0 1 21
OPTKEY:
>1
OPTION:
> LMOH
AUDIOGRP:
>AUDIO2
OPTION:
>$
```

SERVORD example for addition of option LMOH in no-prompt mode

```
> ADO $ 0 0 1 21  1  LMOH AUDIO2 $
```

Name Display for MADN Members

Ordering codes

Functional group ordering code: MDC00008

Functionality ordering code: not applicable

Release applicability

BCS26 and up

Prerequisites

To operate, Name Display for MADN Members has the following prerequisites:

- BAS Generic, BAS00003
- MDC Minimum, MDC00001
- MDC MBS Minimum, MDC00007

Description

Name Display for MADN Members enables end users to assign names to multiple appearance directory number (MADN) groups and to each secondary member of a MADN group. (Names can be assigned to primary members through the Calling Name Display feature [AE0581] in feature package NTX946AB.) Name Display for MADN Members allows each MADN group member to be identified by a group name and a unique member name. These names are displayed on Meridian business sets (MBS) with display during call activity in order to provide more detailed calling information to the parties involved in the call.

The name of a MADN group is associated with the MADN directory number (DN). The name of a MADN group member is associated with an individual's line equipment number (LEN) and an MBS key. A different name can be datafilled for each member, regardless of primary or secondary status of a member. If a member name is not datafilled, the group name is used.

Name Display for MADN Members is available for the M5209 and M5312 MBSs and for the SL-100 business set (NT4X20).

Operation

When a MADN group member originates a call, the originator's name is displayed on the terminating party's phone. For instance, if Mary Jones (a MADN group member) calls John Smith, Mary's number is displayed on John's phone.

Name Display for MADN Members (continued)

When a call terminates on the primary directory Number (PDN) of a MADN group member, the MADN group name is displayed on the originating party's phone before the call is answered, and the MADN group member's name is displayed after the call is answered. For example, if John Smith calls Mary Jones (a MADN group member), Mary's group name is displayed on John's phone before the call is answered, and Mary's name is displayed on John's phone after the call is answered.

A member name can contain a maximum of 15 characters and can consist of any combination of valid display characters. The valid display characters are numerals 0 to 9, uppercase A to Z, and the following symbols: period (.), colon (:), asterisk (*), octothorpe (#), and dash (-). A space must be entered as an underscore (_). Lowercase letters can be entered but are capitalized on the display.

The DN has a maximum of ten digits for display. Option DISPDIGS in Table CUSTSTN (Customer Group Station Option) determines the number of digits for display. The DN can be truncated, depending on the customer group option. If both the name and the DN do not fit on the display, only the name is displayed. If the name is not available, only the DN is displayed.

For network calls involving MADN group members, only the MADN group names are associated with a network ID. Option MEMDISP in Table DNATTRS (Directory Number Attributes) defines whether the MADN group member names are used for certain networks. Table DNATTRS contains option NAME, which assigns a name to the MADN group, and option SUPPRESS, which prevents the DN from displaying on network calls.

User interface

MADN group and member names are datafilled for each member through the Service Order System (SERVORD) or through table control. Each MADN group member is identified by a MADN group name and a MADN group member name.

In the table editor example in the following figure, the name associated with LEN 00 0 04 08 is changed from John to Mary on MBS key 3 using the table editor command CHA (change).

Name Display for MADN Members (continued)

Example table editor display of the CHA command

```
CI:
 >TABLE MDNMEM

  TABLE:  MDNMEM
  >CHA
   DN:
  >7227000
   KEY:
  >3
   PRIMARY:
  >N
   RING:
  >ALWAYS
   NAME:
  >MARY
   OPTION:
  >$
```

In the table editor example in the following figure, the name AUTO DEPT is added to the MADN group name associated with DN 613-722-7000 for the PRIVATE network using the table editor command ADD (add).

Example table editor display of the ADD command

```
CI:
 >TABLE DNATTRS

  TABLE:  DNATTRS
  >ADD
   KEY:
  >613 722 7000
   DATA:
  >PRIVATE NAME AUTO_DEPT
   DATA:
  >$
```

Name Display for MADN Members expands the query commands QDN (query directory number) and QLEN (query line equipment number) to show MADN group member names. The following figure shows an example MAP (maintenance and administration position) display of the QDN command. The MADN group member names are included with the MADN group member LEN information.

Name Display for MADN Members (continued)

MAP display example for the QDN command

```
CI:
>QDN  7227000
_____________________________________________________________
DN: 7227000
TYPE: MULTIPLE APPEARANCE DIRECTORY NUMBER
SNPA: 919  SIG:  N/A  LNATTIDX:  N/A
LINE EQUIPMENT NUMBER:  HOST 00 0 3 24
PRIMARY LEN: HOST 00 0 3 24
LINE CLASS CODE:  MBS
KEY:  1
CUSTGRP: MDCGRP1  SUBGRP:  0  NCOS:  0  RING: Y
MADN INFO – TYPE:  SCA  PRIMARY:  Y
CARDCODE: 6X21AC GND:  PADGRP: PPHON BNV: NL MNO: Y
PM  NODE NUMBER:    16
PM TERMINAL NUMBER: 121
DNGRPS OPTIONS:
NETNAME: PRIVATE
NAME: CARLING
NETNAME: PUBLIC
NAME: CARLING
ADDRESS: 91972NNNNN
OPTIONS:
3WC  NAME  PRIVATE  MEMDISP  PRIVATE  MDNNAME
MADN MEMBER LENS INFO:
   HOST 00 0 03 24  KEY:  1  SCA  PRIMARY:  Y  RING:  Y
                     NAME:  TOM
   HOST 00 0 04 08  KEY:  6  SCA  PRIMARY:     RING:  Y
                     NAME:  JOHN
   HOST 00 0 05 08  KEY:  6  SCA  PRIMARY:     RING:  Y
                     NAME:  KAREN
```

The following figure shows an example MAP display of the QLEN command. The MADN group name is included in the network options.

Name Display for MADN Members (continued)

MAP display example for the QLEN command

```
CI:
>QLEN  0 0 3 24
_____________________________________________________________
LEN:    HOST 00 0 03 24
TYPE: MULTIPLE APPEARANCE DIRECTORY NUMBER
SNPA: 919
DIRECTORY NUMBER:  7227000
LINE CLASS CODE: MBS
CUSTGRP: MDCGRP1  SUBGRP:  0  NCOS:  0  RING: Y
ADDONS:  NONE  EXTENSION:
MADN INFO – TYPE:  SCA  PRIMARY:  Y
CARDCODE: 6X21AC GND:  PADGRP: PPHON BNV: NL MNO: Y
PM  NODE NUMBER:    16
PM TERMINAL NUMBER: 121
DNGRPS OPTIONS:
NETNAME: PRIVATE
NAME: CARLING
NETNAME: PUBLIC
NAME: CARLING
ADDRESS: 91972NNNNN
OPTIONS:
3WC  MEMDISP  PRIVATE  NAME  PUBLIC  HOUSEWARE  SUPPRESS
PUBLIC MDNNAME

KEY     DN
---     --
  1     MDN 7227000  SCA  PRIMARY:  Y  RING:  Y
  2     DN  7227001
  3     DN  7227002

KEY     FEATURE
---     -------
  5        3WC
```

Name Display for MADN Members (continued)

Translations table flow

The Name Display for MADN Members translations tables are described in the following list:

- Table CUSTSTN (Customer Group Station Option) contains the station options assigned to each customer group. Option NAMEDISP indicates that a customer group has name display.
- Table DNATTRS (Directory Number Attributes) stores attributes for individual end user stations for up to two networks. Option MEMDISP, when present, allows the display of MADN group member names.
- Table MDNMEM (Multiple Appearance Directory Number Member) contains information associated with a MADN group. This information applies to all members of a MADN group. When a MADN group member is created or option MDN is added in SERVORD, entries are automatically added to Table MDNMEM. When a MADN group member is deleted in SERVORD, the corresponding entry is deleted from Table MDNMEM. This table is indexed by the MADN group member's LEN and MBS key number. Option MDNNAME is identified to assign a name to a MADN group member.

The Name Display for MADN Members translation process is shown in the flowchart that follows. The flowchart and data show the translation flow to assign Name Display for MADN Members to an MBS or SL-100 business set.

Name Display for MADN Members (continued)

Table flow for Name Display for MADN Members

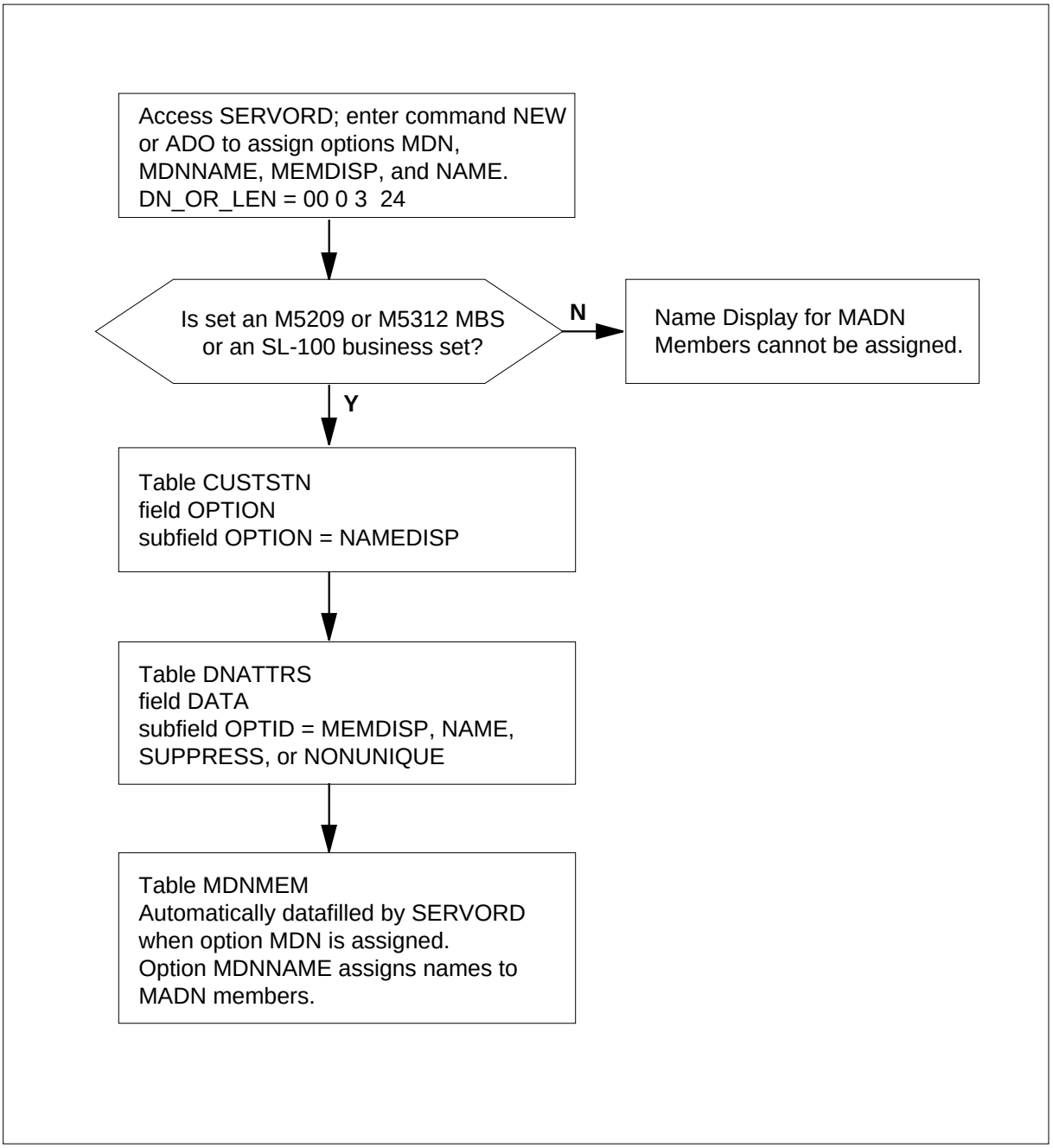

Name Display for MADN Members (continued)

The following table lists the datafill content used in the flowchart.

Datafill example for Name Display for MADN Members

Datafill table	Example data
DNATTRS	919 722 7000 (PUBLIC (MEMDISP) N N MARY_BROWN
CUSTSTN	MDCGRP1 CRRNOKSH NAMEDISP
MDNMEM	00 0 03 24 1 Y Y MDNNAME JSMITH $

Limitations and restrictions

The following limitations and restrictions apply to Name Display for MADN Members:

- When a MADN group member name is available, it is used instead of the MADN group name. These names are used for MADN call processing only.
- The MADN group member name can be associated with any network and can be prevented from displaying on any network.
- When MADN calls go across the network, only the MADN group names are associated with a network ID.
- The MADN feature must be assigned to the line prior to assigning option MDNNAME or MEMDISP in SERVORD.
- When a call is connected to a multiple bridge arrangement (MBA) or single bridge arrangement (SBA) MADN group member and a second call is initiated (as in three-way calling), bridging of other members does not update the display for the call.
- Option NAMEDISP must be assigned in Table CUSTSTN to activate Name Display for MADN Members.
- The calling display is immediately provided for calls terminating on the PDN of an MBS with display; otherwise, the calling display is given upon answer.

Interactions

The following features interact with Name Display for MADN Members:

- Multiple Appearance Directory Number
  - — When a call to or from a MADN single call arrangement (SCA) group member is put on hold, any other SCA group member can access the

call. When another group member accesses the call, the display is updated with the appropriate SCA group member's name.

— When a call to or from a MADN multiple call arrangement (MCA) group member is put on hold, the display clears until the hold is released. MCA group members who are not involved in the call are not affected by Name Display for MADN Members.

- Privacy Release

  — If a MADN SCA group member bridges into a call after the Privacy Release (PRL) feature has been activated, the MADN group members involved in the call are provided with the external party's identity.

Activation/deactivation by the end user

Name Display for MADN Members requires no activation or deactivation by the end user.

Billing

Name Display for MADN Members does not affect billing.

Station Message Detail Recording

Name Display for MADN Members does not affect Station Message Detail Recording.

Datafilling office parameters

Name Display for MADN Members does not affect office parameters.

Datafill sequence

The following table lists the tables that require datafill to implement Name Display for MADN Members. The tables are listed in the order in which they are to be datafilled.

Datafill tables required for Name Display for MADN Members

Table	Purpose of table
CUSTSTN	Customer Group Station Option Table
DNATTRS	Directory Number Attributes Table
MDNMEM (Note)	Multiple Appearance Directory Number Member Table
Note: This table is datafilled through SERVORD; therefore, no datafill procedure is provided.	

Name Display for MADN Members (continued)

Datafilling table CUSTSTN

Table CUSTSTN (Customer Group Station Option) contains the station options assigned to each customer group. Option NAMEDISP is added to Table CUSTSTN. This option indicates that a customer group has name display.

The following table shows the datafill specific to Name Display for MADN Members for table CUSTSTN. Only those fields that apply directly to Name Display for MADN Members are shown. For a description of the other fields, refer to the data schema section of this document.

Datafilling table CUSTSTN

Field	Subfield or refinement	Entry	Explanation and action
OPTION		see subfield	Option. This field consists of subfield OPTION.
	OPTION	NAMEDISP	Option. This subfield specifies the option. Enter NAMEDISP.

Datafill example for table CUSTSTN

The following example shows sample datafill for table CUSTSTN with option NAMEDISP datafilled.

MAP display example for table CUSTSTN

```
TABLE: CUSTSTN

  CUSTNAME              OPTNAME                      OPTION
_____________________________________________________________
 MDCGRP1               CRRNOKSH                   NAMEDISP
```

Datafilling table DNATTRS

Table DNATTRS (Directory Number Attributes) contains DN attributes for specific DNs and stores attributes for individual end user stations for up to two networks. Names can be stored in Table DNGRPS (Directory Number Groups) for a range of DNs. If both tables are datafilled for the same DN, the name from Table DNATTRS takes precedence. Option MEMDISP, when present, allows the display of MADN group member names.

Once a name has been assigned to a DN, the name is stored in Table DNATTRS with a network name of PUBLIC. If a line is taken out of service, the name for that DN is removed from Table DNATTRS.

Name Display for MADN Members (continued)

The following table shows the datafill specific to Name Display for MADN Members for table DNATTRS. Only those fields that apply directly to Name Display for MADN Members are shown. For a description of the other fields, refer to the data schema section of this document.

Datafilling table DNATTRS

Field	Subfield or refinement	Entry	Explanation and action
DATA		see subfields	Network Attributes. This field consists of several subfields. Only subfields NETNAME and NETOPTS pertain to this feature.
	NETNAME	alphanumeric	Logical Network Name. This subfield specifies the name of the network. Enter an alphanumeric name of up to 32 characters.
	NETOPTS	see subfield	Network Options List. This subfield consists of several subfields. Only subfield OPTID pertains to this feature.
	OPTID	NAME, MEMDISP, SUPPRESS, or NONUNIQUE	Network Option Identifier. This subfield specifies the options for each network. Enter NAME, MEMDISP, SUPPRESS, or NONUNIQUE.
If OPTID is set to NAME, subfield DNAME requires datafill.			
	DNAME	see explanation	Display Name. This subfield specifies the MADN group name associated with the station to be displayed. Enter a string of up to 15 characters.
If OPTID is set to SUPPRESS, subfields DN and NAME require datafill.			
	DN	Y or N	Directory Number. This subfield specifies whether the DN is suppressed. Enter Y or N.
	NAME	Y or N	Name. This subfield specifies whether the name associated with the DN is suppressed. Enter Y or N.

Datafill example for table DNATTRS

The following example shows sample datafill for table DNATTRS. In this example, option MEMDISP is associated with the network name PUBLIC, and the name Mary Brown is associated with the DN.

Name Display for MADN Members (continued)

MAP display example for table DNATTRS

```
TABLE: DNATTRS

  KEY                                                  DATA
                                                     OPTDATA

_____________________________________________________________
919 722 7000  (PUBLIC  ( MEMDISP )   N    N   MARY_BROWN
```

Translation verification tools

Name Display for MADN Members does not use translation verification tools.

SERVORD

Name Display for MADN Members enhances the Service Order System (SERVORD) by allowing names for MADN group members to be datafilled. This feature introduces two table options that can be added or deleted using SERVORD. Option MEMDISP, which allows a group member name to be sent across a particular network, is accessible by the ADO (add option), NEW (establish service), and DEO (delete option) commands. Option MDNNAME, which adds names for MADN group members, is accessible by the ADO, NEW, CHF (change feature information for preexisting feature), and DEO commands. Removing option MEMDISP by using the DEO command deletes the option for all network names.

For MADN group member names to be displayed, the MADN DN must be datafilled in Table DNATTRS with option MEMDISP datafilled in subfield OPTID. Option MDN must be assigned to a line before assigning option MDNNAME or MEMDISP.

SERVORD limitations and restrictions

Name Display for MADN Members has no SERVORD limitations and restrictions.

Name Display for MADN Members (continued)

SERVORD prompts

The following table shows the SERVORD prompts used to associate a name with Name Display for MADN Members on an MBS using options MDN, MDNNAME, and MEMDISP.

SERVORD prompts for Name Display for MADN Members

Prompt	Valid input	Explanation
DN_OR_LEN	7-digit DN or LEN	Specifies the 7-digit DN or LEN of the line to be changed. Enter the DN or LEN.
DISPLAYNAME	1- to 15-character name	Indicates the name to be displayed on an MBS. Enter a 1- to 15-character name.
DIR_NUMBER	7-digit DN	Indicates the DN assigned to an MADN line. Enter the 7-digit DN.
MDNTYPE	EXB, MCA, SCA	Specifies a multiple access DN. Enter EXB, MCA, or SCA.
NETNAME	Character string	Indicates the network name shown as a DN attribute. Enter the network name.
OPTION	MDN, MDNNAME, MEMDISP, NAME	Indicates the name of the option. Enter MDN, MDNNAME, MEMDISP, or NAME.
OPTKEY	1 to 69	Indicates the key on an MBS to which an option is assigned. Enter a value from 1 to 69.
PRIMARY	Y, N	Indicates whether the member is the primary member of a MADN group. Enter Y or N.
RING	Y, N	Specifies whether the ring from a telephone speaker is required in addition to the call waiting tone heard from the handset. Enter Y or N.
Note: Table MDNMEM is automatically datafilled when Name Display for MADN Members is assigned using SERVORD.		

SERVORD example for adding Name Display for MADN Members

The following SERVORD example shows how Name Display for MADN Members is added to a MADN DN using the ADO command.

Name Display for MADN Members (continued)

SERVORD example for Name Display for MADN Members in prompt mode

```
>ADO
SONUMBER:     NOW  87 10 01 PM
>
DN_OR_LEN:
> 554725
OPTION:
>M,DM
MDNTYPE:
> EXB
PRIMARY:
> Y
DIR_NUMBER:  5554725
> $
OPTION:
> $
```

SERVORD example for Name Display for MADN Members in no-prompt mode

```
> ADO   5554725  MDN  EXB  Y   $
```

The following SERVORD example shows how option MDNNAME Name Display for MADN Members is added to a MADN DN using the ADO command.

SERVORD example for Name Display for MADN Members in prompt mode

```
>ADO
SONUMBER:     NOW  87 10 01 PM
>
DN_OR_LEN:
> 5554725
LEN:
> 00 0 03 24
OPTKEY:
> 2
OPTION:
> MDNNAME
DISPLAYNAME:
> J_SMITH
OPTION:
> $
```

Name Display for MADN Members (end)

SERVORD example for Name Display for MADN Members in no-prompt mode

```
> ADO  5554725  00 0 03 24  2  MDNNAME   J_SMITH   $
```

The following SERVORD example shows how option MEMDISP Name Display for MADN Members is added to a MADN DN using the ADO command.

SERVORD example for Name Display for MADN Members in prompt mode

```
>ADO
SONUMBER:     NOW  87 10 01 PM
>
DN_OR_LEN:
>  5554725
LEN:
> 00 0 03 24
OPTKEY:
> 3
OPTION:
> MEMDISP
NETNAME:
> PUBLIC
NETNAME:
> $
OPTKEY:
> $
```

SERVORD example for Name Display for MADN Members in no-prompt mode

```
> ADO  5554725  00 0 03 24  3  MEMDISP  PUBLIC  $  $
```

Originating/Terminating Line Select (TLS)

Ordering codes

Functional group ordering code: MDC00008

Functionality ordering code: not applicable

Release applicability

BCS27 and up

Prerequisites

To operate, Originating/Terminating Line Select (TLS) has the following prerequisites:

- BAS Generic, BAS00003
- MDC MBS Minimum, MDC00007
- MDC Minimum, MDC00001

Description

Originating/Terminating Line Select offers the Meridian business set (MBS) end user a variety of line selection options for originating and terminating calls. Previously, when an MBS end user went off-hook to originate or answer a call, the primary directory number (PDN) on key 1 was automatically selected as the line on which the call was originated or answered. To access a different line, the end user had to press another directory number (DN) key.

Operation

Originating options

Originating/Terminating Line Select provides the following originating line selection (OLS) options:

- Option IDLE automatically connects the end user to an idle line when going off-hook. If more than one line is idle, the search for an idle line begins with the PDN up to the highest DN key until an idle line is selected. If no idle DNs are found, the end user hears silence. To override option IDLE, the end user can press the desired DN key before going off-hook.
- Option NOSELECT requires that the end user always manually select the originating line by pressing the desired DN key. Going off-hook does not select a DN for origination. The end user hears silence until a DN key is pressed, at which time the end user hears dial tone.

Options IDLE and NOSELECT are datafilled in Table KSETFEAT (Business Set and Data Unit Feature). If an originating line selection option is not

assigned to an MBS, the default is to access the PDN on key 1 automatically when the end user goes off-hook to answer a call.

Terminating options

Originating/Terminating Line Select provides the following terminating line selection (TLS) options:

- Option INCOMING allows the end user to answer an incoming call automatically when going off-hook. If more than one call is incoming, the first call received is the first one answered, and ringing calls are given priority over non-ringing calls. The end user can override option INCOMING by pressing a DN key before going off-hook.
- Option NOSELECT requires that the end user always manually select the line to be answered by pressing the desired DN key. Going off-hook does not answer an incoming call. The end user hears silence until a DN key is pressed.

Options INCOMING and NOSELECT are datafilled in Table KSETFEAT. If a terminating line selection option is not assigned to an MBS, the default is to access the PDN on key 1 automatically when the end user goes off-hook to answer a call. If the incoming call is not to the PDN, the end user must press the DN key associated with the incoming call.

When an unanswered call is incoming to an MBS, the terminating line selection option takes precedence over the originating line selection option. For example, assume that an MBS is assigned the originating option IDLE and the terminating option INCOMING. If an unanswered call is ringing the set and the end user goes off-hook, the incoming call is answered since the terminating option takes precedence over the originating option.

Translations table flow

The Originating/Terminating Line Select translations process is shown in the flowcharts in the following figures. The first flowchart and data show specific information that is entered in Table KSETFEAT when OLS is assigned through SERVORD and the result of calls originating to an MBS when options IDLE and NOSELECT are assigned. The second flowchart and data show specific information that is entered in Table KSETFEAT when TLS is assigned through SERVORD and the result of calls terminating on an MBS when options INCOMING and NOSELECT are assigned.

Originating/Terminating Line Select (TLS) (continued)

Table flow for Originating/Terminating Line Select (TLS) (OLS)

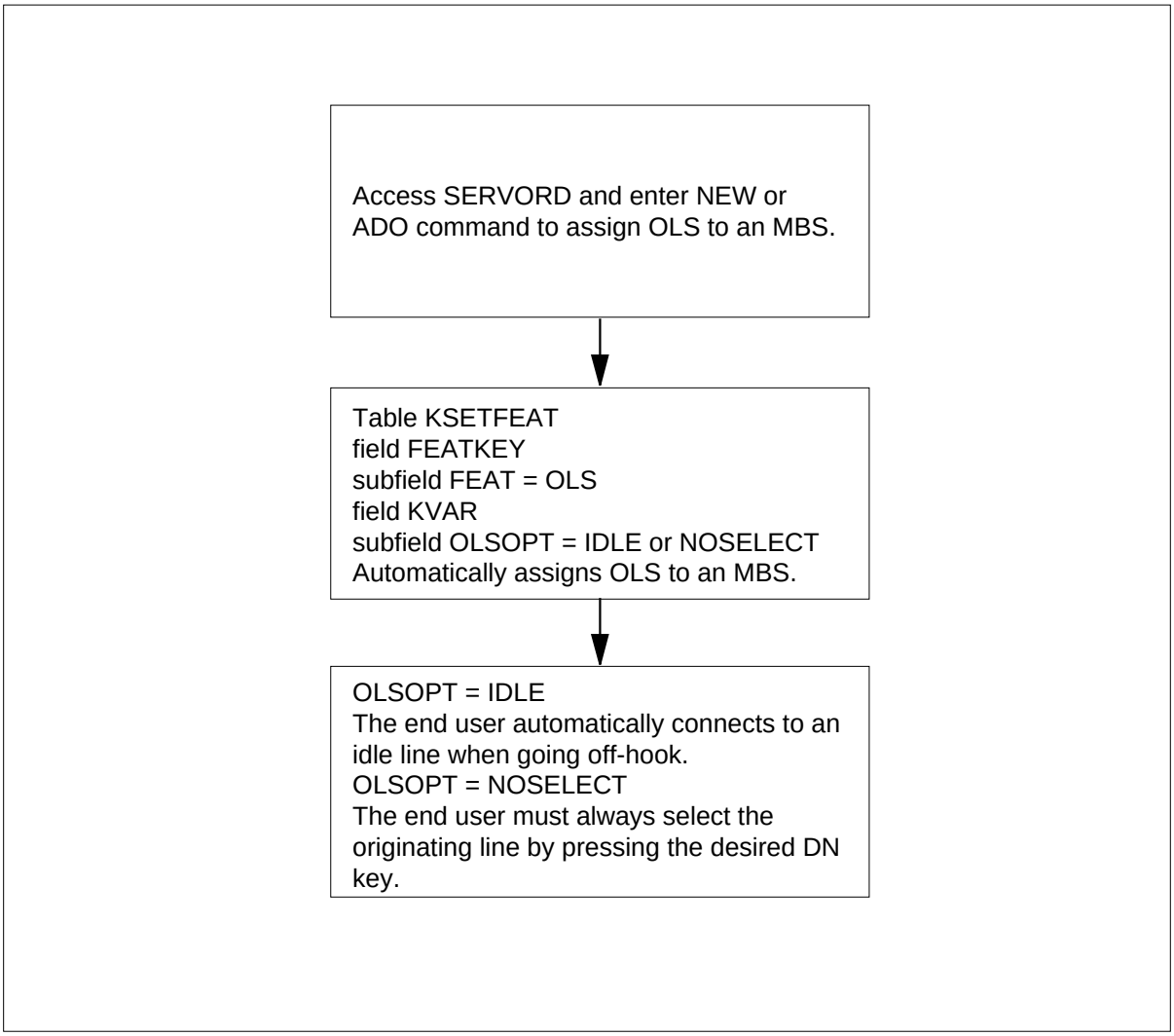

The following table lists the datafill content used in the flowchart.

The following items show example data for Originating/Terminating Line Select (OLS):

Originating/Terminating Line Select (TLS) (continued)

LEN of end user with OLS - 00 0 08 06

Datafill example for Originating/Terminating Line Select (TLS)

Datafill table	Example data
KSETFEAT	HOST 00 0 08 06 1 OLS OLS IDLE
	HOST 00 0 08 06 1 OLS OLS NOSELECT

Table flow for Originating/Terminating Line Select (TLS) (TLS)

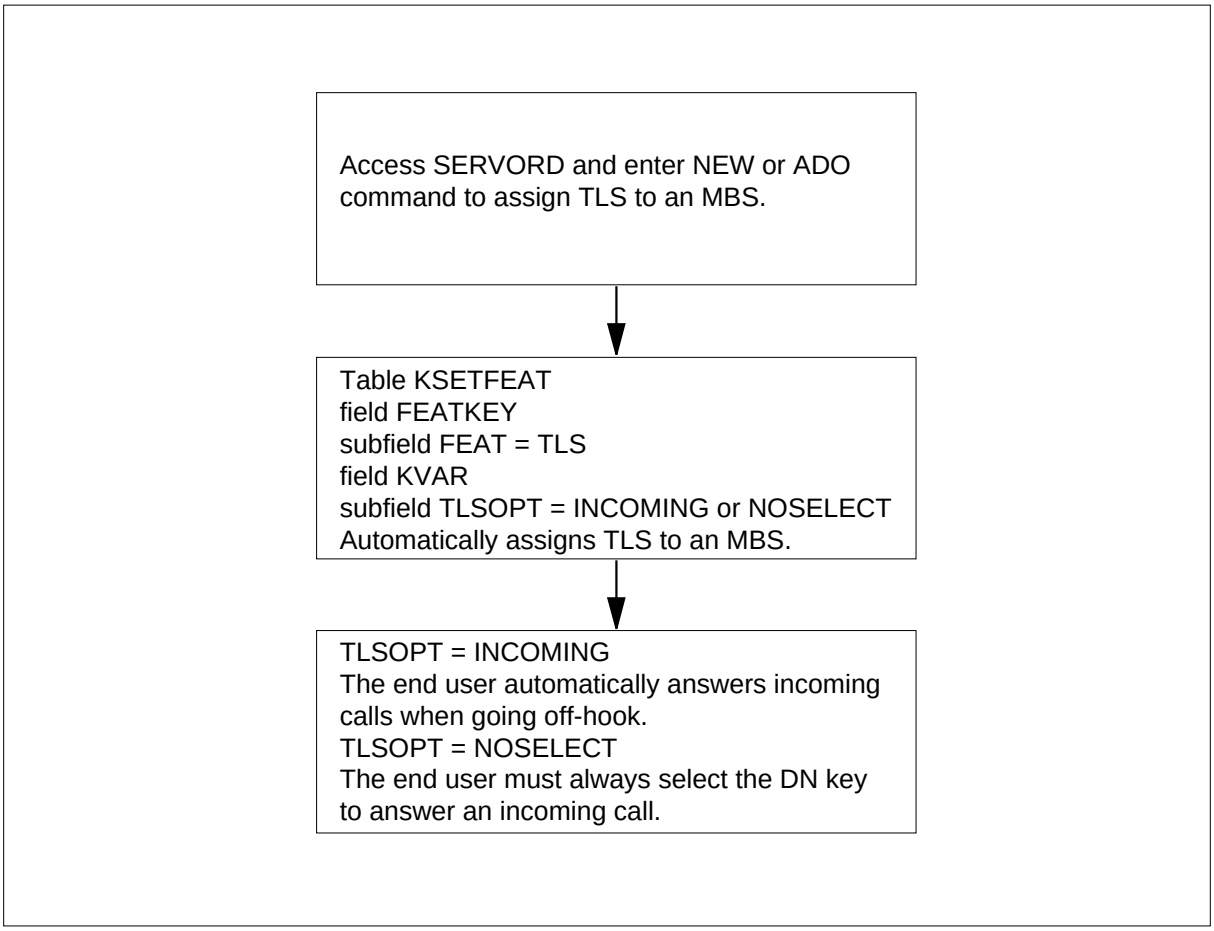

The following items show example data for Originating/Terminating Line Select (TLS):

LEN of end user with TLS - 00 0 08 05.

Originating/Terminating Line Select (TLS) (continued)

The following table lists the datafill content used in the flowchart.

Datafill example for Originating/Terminating Line Select (TLS)

Datafill table	Example data
KSETFEAT	HOST 00 0 08 05 1 TLS TLS INCOMING
	HOST 00 0 08 05 1 TLS TLS NOSELECT

Limitations and restrictions

The following limitations and restrictions apply to Originating/Terminating Line Select (TLS):

- Originating/Terminating Line Select cannot be assigned to a non-primary member of a multiple appearance directory number (MADN) group. This feature can only be assigned to the PDN of a MADN group.
- OLS and TLS line options cannot be datafilled for Automatic Call Distribution (ACD) sets.

Interactions

The following paragraphs describe the interactions between Originating/Terminating Line Select (TLS) and other functionalities.

The following features interact with Originating/Terminating Line Select:

- Auto Answer Back

  If Auto Answer Back is activated, calls that terminate on the PDN are automatically answered first regardless of the TLS option assigned.

- Group Intercom

  For the originating line option IDLE, a group intercom (GIC) key is not selected in the search for an idle line.

- Uniform Call Distribution

  Uniform Call Distribution (UCD) DNs cannot be selected by any of the OLS options.

Activation/deactivation by the end user

Originating/Terminating Line Select (TLS) requires no activation or deactivation by the end user.

Billing

Originating/Terminating Line Select (TLS) does not affect billing.

Station Message Detail Recording

Originating/Terminating Line Select (TLS) does not affect Station Message Detail Recording.

Datafilling office parameters

Originating/Terminating Line Select (TLS) does not affect office parameters.

Datafill sequence

The following table lists the tables that require datafill to implement Originating/Terminating Line Select (TLS). The tables are listed in the order in which they are to be datafilled.

Datafill tables required for Originating/Terminating Line Select (TLS)

Table	Purpose of table
KSETFEAT (Note)	Business Set and Data-Unit Feature. This table defines the line features that are assigned tobusiness sets and data units.
Note: This table is datafilled through SERVORD; therefore, no datafill procedure is provided.	

Translation verification tools

Originating/Terminating Line Select (TLS) does not use translation verification tools.

SERVORD

Originating/Terminating Line Select adds line options OLS and TLS to the Service Order System (SERVORD):

Note: Originating/Terminating Line Select can only be assigned to the PDN of a MADN group.

Table KSETFEAT

Table KSETFEAT (Business Set and Data Unit Feature) defines the line features that are assigned to business sets and data units.
Originating/Terminating Line Select requires that Table KSETFEAT be datafilled through SERVORD.

Options OLS and TLS can be assigned to lines that have the following line class codes (LCC):

- M2008
- M2009
- M2018

Originating/Terminating Line Select (TLS) (continued)

- M2112
- M2317
- M2616
- M3000
- M5009
- M5112
- M5209
- M5312.

The following SERVORD commands are used to add, delete, and change options OLS and TLS:

- ADO (add option)
- DEO (delete option)
- NEW (establish service)
- CHF (change feature information for preexisting feature).

SERVORD limitations and restrictions

Originating/Terminating Line Select (TLS) has no SERVORD limitations and restrictions.

SERVORD prompts

The following table shows the SERVORD prompts used to assign Originating/Terminating Line Select (TLS) to an MBS.

SERVORD prompts for Originating/Terminating Line Select (TLS) (Sheet 1 of 3)

Prompt	Valid input	Explanation
DN_OR_LEN	7-digit DN or LEN	Specifies the 7-digit DN or LEN of the line to be changed. Enter the DN or LEN.
GROUP	Up to 8 alphanumeric characters, beginning with an alphabetic character	Indicates the customer group identified with the LCC. Enter a 1- to 8-character alphanumeric name.
Note: Table KSETFEAT is automatically datafilled when Originating/Terminating Line Select is assigned using SERVORD.		

Originating/Terminating Line Select (TLS) (continued)

SERVORD prompts for Originating/Terminating Line Select (TLS) (Sheet 2 of 3)

Prompt	Valid input	Explanation
KEY	1 to 1023	Indicates the line hunt overflow route index that identifies the overflow route. Enter a value from 1 to 1023.
LCC	M2008, M2009, M2018, M2112, M2317, M2616, M3000, M5009, M5112, M5209, M5312	Indicates the line class code of the service to be established or deleted. Enter M2008, M2009, M2018, M2112, M2317, M2616, M3000, M5009, M5112, M5209, or M5312.
LATANAME	Alphanumeric	Indicates the calling local access and transport area name associated with the originator of the call. Enter an alphanumeric name.
LEN_OR_LTID	LEN or LTID	Indicates the LEN or logical terminal identifier of the DN to be changed. Enter a value from 0 to 255.
LTG	0 to 511	Indicates the line treatment group number. Enter a value from 0 to 511.
NCOS	0 to 511	Indicates the network class of service assigned to MDC trunks. Enter a value from 0 to 511.
OLSOPT	IDLE, NOSELECT	Specifies the originating line select option. Enter IDLE or NOSELECT.
OPTION	OLS, TLS	Indicates the name of the option. Enter OLS or TLS.
OPTKEY	1 to 69	Indicates the key on an MBS to which an option is assigned. Enter a value from 1 to 69.
RINGING	Y, N	Specifies whether the key on an MBS is assigned with ringing ability. Enter Y or N.
SNPA	3-digit SNPA	Indicates the serving numbering plan area. Enter the 3-digit SNPA.
Note: Table KSETFEAT is automatically datafilled when Originating/Terminating Line Select is assigned using SERVORD.		

Originating/Terminating Line Select (TLS) (continued)

SERVORD prompts for Originating/Terminating Line Select (TLS) (Sheet 3 of 3)

Prompt	Valid input	Explanation
SUBGRP	0 to 7	Indicates the subgroup number of the customer group to which the station or DN belongs. Enter a value from 0 to 7.
TLSOPT	INCOMING, NOSELECT	Specifies the terminating line select option. Enter INCOMING or NOSELECT.
Note: Table KSETFEAT is automatically datafilled when Originating/Terminating Line Select is assigned using SERVORD.		

Options OLS and TLS must be assigned to the PDN on key 1 of an MBS; that is, OPTKEY must equal 1. After option OLS or TLS is assigned to key 1, the key number appears in the option list of every DN on an MBS that is compatible with option OLS or TLS.

When option OLS or TLS is assigned to or deleted from a line through SERVORD, Table KSETFEAT is automatically datafilled.

SERVORD example for implementing Originating/Terminating Line Select (TLS)

The following SERVORD example shows how Originating/Terminating Line Select (TLS) is added to an MBS with OLS option IDLE using the NEW command.

Originating/Terminating Line Select (TLS) (continued)

SERVORD example for Originating/Terminating Line Select (TLS) adding OLS option IDLE to an MBS in prompt mode

```
SO:
>NEW
DN:
> 5551234
LCC:
> M5312
GROUP
> MDCGRP1
SUBGRP:
> (
NCOS:
> (
SNPA:
> 919
KEY:
> 1
RINGING:
> Y
LATANAME:
> NILLATA
LTG:
> (
LEN_OR_LTID:
> 2 1 3 15
OPTKEY:
> 1
OPTION:
> OLS
OLSOPT:
> IDLE
OPTKEY:
> $
```

SERVORD example for Originating/Terminating Line Select (TLS) in no-prompt mode

```
> NEW  5551234   M5312   MDCGRP1   0  0  919  1  Y  NILLATA  0  2 1 3
15  1 OLS  IDLE  $
```

The following SERVORD example shows how Originating/Terminating Line Select (TLS) is added to an MBS with TLS option INCOMING using the ADO command. Note that the OPTKEY is 1.

Originating/Terminating Line Select (TLS) (end)

SERVORD example for Originating/Terminating Line Select (TLS) adding TLS option INCOMING to an MBS in prompt mode

```
SO:
> ADO
DN_OR_LEN:
> 2 1 3 15
OPTKEY:
> 1
OPTION:
> TLS
TLSOPT:
> INCOMING
OPTKEY:
> $
```

SERVORD example for Originating/Terminating Line Select (TLS) in no-prompt mode

```
> ADO  2 1 3 15  1  TLS  INCOMING  $
```

Repeated Alert for MBS

Ordering codes

Functional group ordering code: MDC00008

Functionality ordering code: not applicable

Release applicability

BCS33 and up

Prerequisites

To operate, Repeated Alert for MBS has the following prerequisites:

- BAS Generic, BAS00003
- MDC MBS Minimum, MDC00007
- MDC Minimum, MDC00001

Description

Under standard operating procedures, when a call is sent to a Meridian business set (MBS) that is off-hook, a single alert tone is emitted, and the called party's directory number (DN) key lamp flashes at 60 impulses per minute (IPM).

Repeated Alert for MBS supplies the called party who is already active on another call with up to seven additional alert tones, which are emitted from the called party's receiver until the incoming call is answered, the incoming call is abandoned by the caller, or the repeated alert (RPA) counter expires. MBS end users who work in a noisy environment may miss the single alert tone and leave the call unanswered. Repeated Alert for MBS helps assure that all incoming calls are answered.

Repeated Alert for MBS provides additional alert tones to an MBS when a call terminates on a DN, multiple appearance directory number (MADN) group intercom (GIC) line, or Automatic Call Distribution (ACD) key, and the set is already active on another key.

Repeated Alert for MBS is available on DMS-100 switches and SL-100 switches that include the MDC software.

Operation

When Repeated Alert for MBS has been assigned to an MBS and its primary directory number (PDN) is already active on another call, any incoming call is sent to the MBS secondary directory number (SDN). An alert tone is then

Repeated Alert for MBS (continued)

emitted once every 6 s for a total of seven tones or until the caller abandons the call or the called party answers the call.

The following figure shows the Repeated Alert for MBS tone cadence, which consists of a 2-s buzz with 4 s of silence.

Repeated Alert for MBS tone cadence

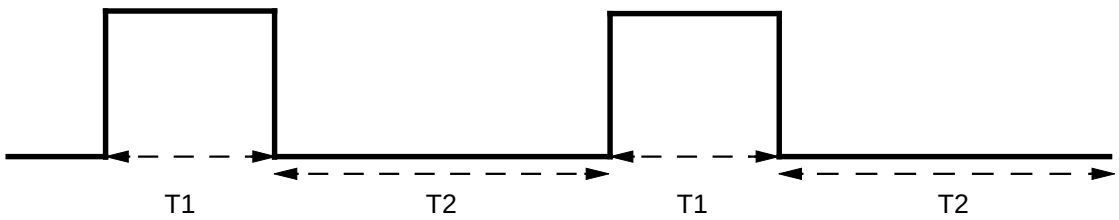

T1 = 2 s of buzzing
T2 = 4 s of silence

When Repeated Alert for MBS has been activated (that is, the call has been sent to the SDN since the PDN was busy), if all seven alert tones have been emitted and the PDN becomes idle, the MBS does not revert to ringing. The SDN key lamp flashes. In addition, if the PDN becomes idle before all seven alert tones have been emitted, the MBS does not revert to ringing, and the SDN lamp continues to flash.

If an MBS has at least three DN keys, it is possible for the Repeated Alert for MBS tone to be emitted more than seven times. If the PDN key is activated, the call is sent to the first SDN, and the RPA counter causes a set of seven alert tones to be emitted. After three tones have been emitted, the call is sent to the next SDN, which, in turn, resets the RPA counter and causes another set of seven alert tones to be emitted. If neither SDN call is answered (or abandoned), a total of ten alert tones are emitted.

Also, if an MBS has at least three DN keys, it is possible for the Repeated Alert for MBS tone to be reduced to less than 6 s if additional calls are sent to the MBS after Repeated Alert for MBS has been activated. For example, an incoming call is sent to the first SDN because the PDN was busy on another call. The Repeated Alert for MBS tone begins its cycle. Meanwhile, another incoming call is sent to the second SDN in the time frame in which the first Repeated Alert for MBS tone began to be emitted. This cycle produces an alert tone, and the RPA counter is reset.

Translations table flow

The Repeated Alert for MBS translations process is shown in the flowchart in the following figure. The flowchart and data show the translation flow for an MBS with option RPA and subfield RING in Table KSETINV set to Y.

Table flow for Repeated Alert for MBS

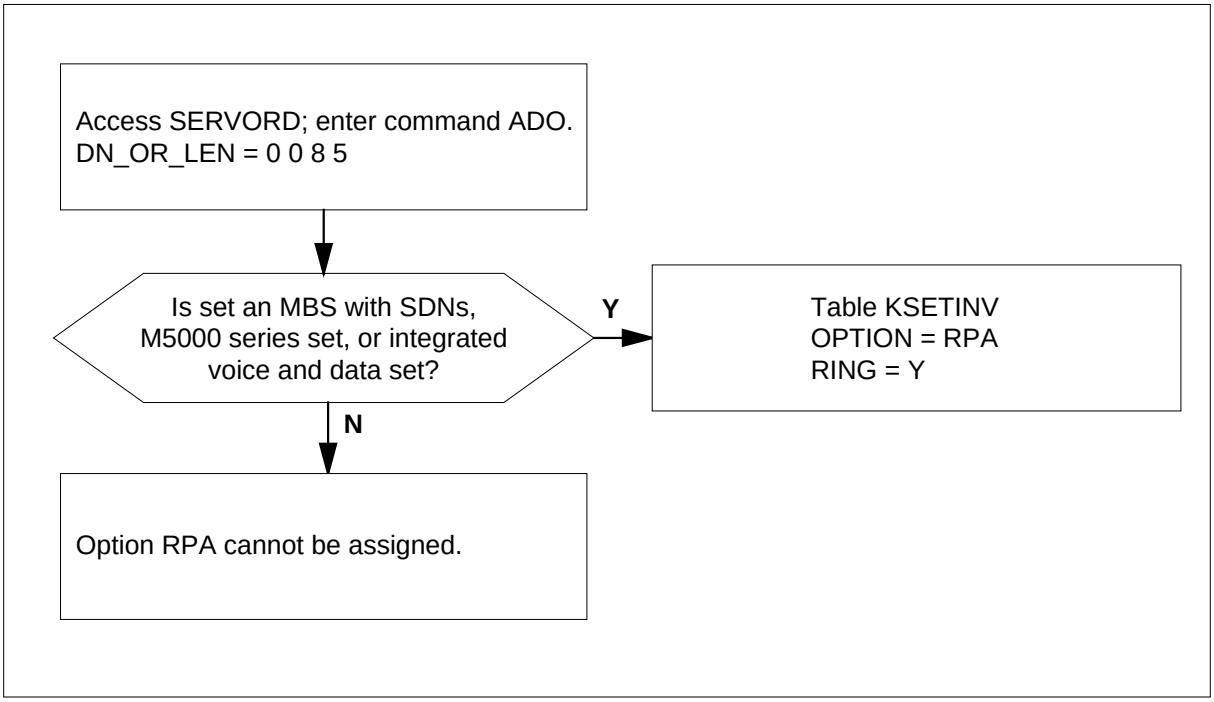

The following table lists the datafill content used in the flowchart.

Datafill example for Repeated Alert for MBS

Datafill table	Example data
KSETINV	HOST 0 0 8 5 M5009 (RPA) $

Limitations and restrictions

The following limitations and restrictions apply to Repeated Alert for MBS:

- Repeated Alert for MBS can only be assigned to the following MBS types:
  - MBSs with SDNs
  - M5000 series sets
- Repeated Alert for MBS is assignable only in cases where buzz alerting is used and is activated when a call is sent to an MBS that is busy.

Repeated Alert for MBS (continued)

- In order for Repeated Alert for MBS to operate, an MBS call must be active; that is, the called party is engaged in a telephone conversation, is dialing another party, has been placed on hold by the caller, or has activated Call Forwarding.
- Subfield RING in Table KSETINV must be set to Y.

  Note: GIC lines always ring on termination; therefore, subfield RING is not datafilled.

- Repeated Alert for MBS and Call Waiting are incompatible and cannot be assigned to the same MBS.
- Repeated Alert for MBS may be preempted by Call Forward Don't Answer (CFD), time-out, or abandonment of a call by the calling party. Once assigned to a set, Repeated Alert for MBS is always active.

Interactions

The following paragraphs describe the interactions between Repeated Alert for MBS and other functionalities.

The following features interact with Repeated Alert for MBS:

- Attendant Console Extended

  The standard seven RPA tones are emitted if an attendant console sends a call to an MBS with Repeated Alert for MBS activated. If the attendant releases the parties, Repeated Alert for MBS is reset, and seven additional RPA tones are emitted.

- Call Forward Don't Answer

  Calls presented on an MBS which has both RPA and Call Forward Don't Answer (CFD) active have the RPA tones stop as the CFD timer expires and calls are forwarded. For example, set A has three DN keys. DN key 1 is CFD to set B. RPA is active against all DN keys on set A. Two calls arrive on set A on keys 1 and 2 while DN key 3 is busy on a call. RPA tones are heard on set A until the CFD timer expires.

- Hold and Autohold

  If the caller places the PDN on hold and an incoming call is sent to an SDN on the same MBS, Repeated Alert for MBS is not activated. However, if the caller places the PDN on autohold and an incoming call is sent to an SDN on the same MBS, Repeated Alert for MBS is activated since the PDN is not in the active state.

- Multiple Appearance Directory Number

Repeated Alert for MBS cannot function if subfield RING in Table KSETINV is not set to Y for the DN to which a MADN has been assigned. This restriction applies to both single and multiple call appearances.

If MADN Ring Forward (MRF) is assigned to the DN, Repeated Alert for MBS functions as follows with each MRF_RING type:

— ALWAYS - seven alert tones then silence

— NEVER - no alert tones

— ABBR - seven alert tones then silence

— DELAY - delay period then seven alert tones

- Three-Way Calling and Call Transfer

  The standard seven RPA tones are emitted if the second leg of a three-way call or a call transfer is sent to an MBS with Repeated Alert for MBS activated. If the controller hangs up, the call is reconfigured to a two-party call. Repeated Alert for MBS is reset, and seven additional RPA tones are emitted.

Activation/deactivation by the end user

Repeated Alert for MBS requires no activation or deactivation by the end user.

Billing

Repeated Alert for MBS does not affect billing.

Station Message Detail Recording

Repeated Alert for MBS does not affect Station Message Detail Recording.

Datafilling office parameters

Repeated Alert for MBS does not affect office parameters.

Datafill sequence

The following table lists the tables that require datafill to implement Repeated Alert for MBS. The tables are listed in the order in which they are to be datafilled.

Datafill tables required for Repeated Alert for MBS

Table	Purpose of table
KSETINV (Note)	Business Set and Data-Unit Inventory. This table contains business set and data unit inventory data.
Note: This table is datafilled through SERVORD; therefore, no datafill procedure is provided.	

Repeated Alert for MBS (continued)

Translation verification tools

Repeated Alert for MBS does not use translation verification tools.

SERVORD

Repeated Alert for MBS is assigned to a DN appearance on an MBS using the Service Order System (SERVORD) commands ADO (add option), NEW (establish service), EST (establish a hunt or call pickup group), and ADD (add line to a hunt group). Repeated Alert for MBS is removed using the SERVORD command DEO (delete option).

SERVORD limitations and restrictions

Repeated Alert for MBS has no SERVORD limitations and restrictions.

SERVORD prompts

The following table shows the SERVORD prompts used to assign Repeated Alert for MBS to an existing line.

SERVORD prompts for Repeated Alert for MBS

Prompt	Valid input	Explanation
DN_OR_LEN	7-digit DN or LEN	Specifies the 7-digit DN or LEN of the line to be changed or displayed. Enter the DN or LEN.
OPTION	RPA	Indicates the name of the option. Enter RPA.
Note: Table KSETINV is automatically datafilled when Repeated Alert for MBS is assigned using SERVORD.		

SERVORD example for implementing Repeated Alert for MBS

The following SERVORD example shows how Repeated Alert for MBS is added to am existing line using the ADO command.

SERVORD example for Repeated Alert for MBS in prompt mode

```
>ADO
SONUMBER:     NOW  92  1  1 AM
>
DN_OR_LEN:
> 0 0 8 5
OPTION:
> RPA
OPTION:
> $
```

Repeated Alert for MBS (end)

SERVORD example for Repeated Alert for MBS in no-prompt mode

```
> ADO $ 0 0 8 5 RPA $
```

Repeated Alert for MBS and SERVORD command NEW

When using the SERVORD command NEW to create a DN on an MBS, ensure that subfield RING in Table KSETINV is set to Y in order for Repeated Alert for MBS to operate. If subfield RING is set to N, only the DN key lamp flashes at 60 IPM and no additional alert tones are emitted.

Repeated Alert for MBS and SERVORD command EST with hunt groups

When using the SERVORD command EST to create a multiline hunt group, a distributed line hunt group, or a directory number hunt group, ensure that subfield RING in Table KSETINV is set to Y in order for Repeated Alert for MBS to operate. If subfield RING is set to N, only the DN key lamp flashes at 60 IPM and no additional alert tones are emitted.

Repeated Alert for MBS and SERVORD command NEWACD

When using the SERVORD command NEWACD (establish a new ACD set) to create an ACD group, ensure that subfield RING in Table KSETINV is set to Y in order for Repeated Alert for MBS to operate.

Specific Key Ringback on Ring Again Request on EBS

Ordering codes

Functional group ordering code: MDC00008

Functionality ordering code: not applicable

Release applicability

BCS27 and up

Prerequisites

To operate, Specific Key Ringback on Ring Again Request on EBS (electronic business set) has the following prerequisites:

- BAS Generic, BAS00003
- MDC MBS Minimum, MDC00007
- MDC Minimum, MDC00001

Description

Specific Key Ringback on Ring Again Request on EBS is enabled by datafilling table CUSTSTN (Customer Group Station Option) with option RAGRCOPT assigned to the customer group. If option RAGRCOPT is datafilled, ring again recalls do not occur to busy MBSs (Meridian business sets).

Specific Key Ringback on Ring Again Request on EBS works with Network Wide Ring Again (AC0262), MBS Call Back Queuing (BC0931), and MBS Ring-Again Feature Key S/W (BV0813) on a single switching node.

Operation

Specific Key Ringback on Ring Again Request on EBS is activated by pressing the ring again key on an MBS. The following example shows how this feature works.

Party 1 has RAG assigned to an MBS, and option RAGRCOPT is datafilled for the customer group. Party 1 calls party 2, but party 2 is busy. Party 1 activates RAG by pressing the ring again key on an MBS. Party 1 is free to originate and receive other calls.

Later, party 2 becomes idle. Specific Key Ringback on Ring Again Request on EBS checks party 1 to determine if the MBS is idle. If the MBS is idle, the ring again recall occurs. If the MBS is not idle, the ring again recall does not occur until the MBS becomes idle.

Specific Key Ringback on Ring Again Request on EBS (continued)

An MBS is considered idle and can accept ring again recalls only if all the following conditions are met:

- None of the DNs (directory numbers) on an MBS is in use.
- The end user is not in the process of programming any feature on an MBS.
- The Intercom (ICM) feature is not in use on an MBS.
- The Group Intercom (GIC) feature is not in use on an MBS.
- The INCALLS key for Automatic Call Distribution (ACD) is not in use on an MBS.

Translations table flow

The Specific Key Ringback on Ring Again Request on EBS translations tables are described in the following list:

- Table KSETFEAT (Business Set and Data Unit Feature) defines the line features assigned to business sets and data units. This table is datafilled when the RAG feature is assigned in SERVORD (Service Order System).

  Note: Specific Key Ringback on Ring Again Request on EBS requires that Table KSETFEAT be datafilled to assign RAG to a specific MBS.

- Table KSETLINE (Business Set and Data Unit Line Assignment) defines the hardware location of the business sets, data units, and information about each DN appearance on the sets. This table is datafilled when the MBS or data unit is assigned in SERVORD.

  Note: Specific Key Ringback on Ring Again Request on EBS requires that Table KSETLINE be datafilled to assign the line to an MBS.

- Table CUSTSTN (Customer Group Station Option) defines the station options assigned to each customer group. Option RAGRCOPT in Table CUSTSTN specifies a ring again recall option to idle MBSs for a specific customer group.

The Specific Key Ringback on Ring Again Request on EBS translations process is shown in the flowchart in the following figure. The flowchart and data show the tables affected when the RAG feature and option RAGRCOPT prevent an MBS end user from receiving ring again recall while active on another call.

Specific Key Ringback on Ring Again Request on EBS (continued)

Table flow for Specific Key Ringback on Ring Again Request on EBS

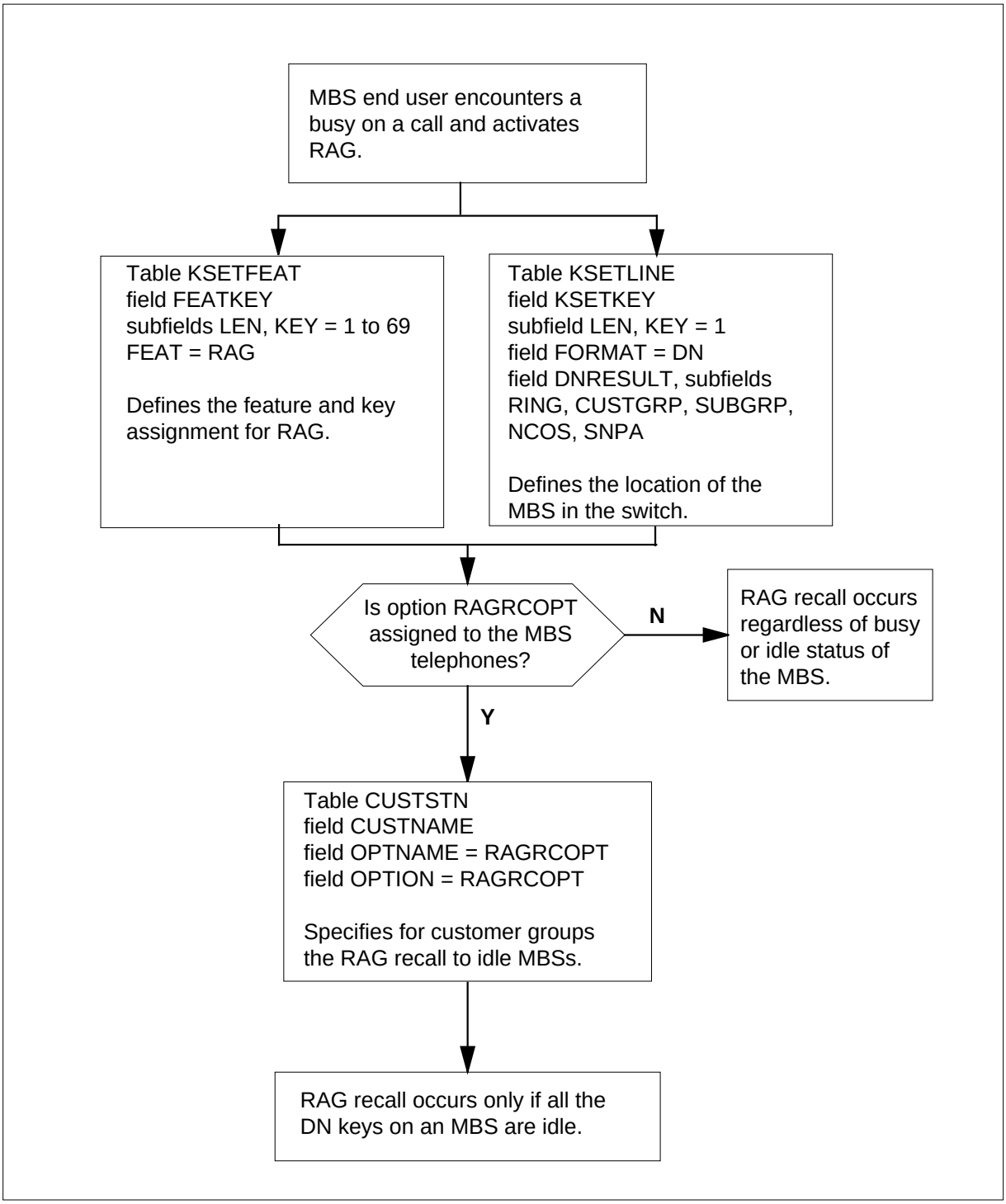

Specific Key Ringback on Ring Again Request on EBS (continued)

The following items show example data for Specific Key Ringback on Ring Again Request on EBS:

- LEN (line equipment number) and key of end user with RAG feature - 00 1 04 12 4
- DN of end user with RAG feature - 555 1234

The following table lists the datafill content used in the flowchart.

Datafill example for Specific Key Ringback on Ring Again Request on EBS

Datafill table	Example data
KSETFEAT	HOST 00 1 04 12 4 RAG RAG $
KSETLINE	HOST 00 1 04 12 1 DN Y 5551234 MDCGRP1 0 2 919 [RAG] $
CUSTSTN	MDCGRP1 RAGRCOPT RAGRCOPT

Limitations and restrictions

Specific Key Ringback on Ring Again Request on EBS has no limitations or restrictions.

Interactions

The following paragraphs describe the interactions between Specific Key Ringback on Ring Again Request on EBS and other functionalities.

The following features interact with Specific Key Ringback on Ring Again Request on EBS:

- Make Set Busy

  If the Make Set Busy (MSB) feature is activated, the set is still considered idle for the purposes of a ring again recall, and the recall occurs. The set is considered idle because a recall is technically a call origination on the part of the party who activated the Ring Again feature, and the MSB feature only prevents call terminations, not call originations.

- Multiple Appearance Directory Number

  There are two types of multiple appearance directory numbers (MADN): the single call arrangement (SCA) and the multiple call arrangement (MCA). With SCA MADN, only one call can be active on the MADN at any time. With MCA MADN, each MADN group member can be active

Specific Key Ringback on Ring Again Request on EBS (continued)

on a call. Each type of MADN interacts with the Specific Key Ringback on Ring Again Request on EBS feature in a different way.

— SCA MADN is considered busy if any occurrence in the MADN group is active in a call or if the MADN group is in a ringing state.

— MCA MADN is considered busy if the MADN occurrence on an MBS being recalled is busy, or if the MADN group is in a ringing state.

Incoming calls to an MCA MADN take precedence over ring again recalls when the MADN group is in a ringing state and a recall is pending. If an MBS has an MCA MADN that is active in a call and the rest of the MADN group is in a ringing state, the MADN key on an MBS begins ringing as soon as the active call is over. The ring again recall is kept pending until the MADN has no incoming or active calls.

Activation/deactivation by the end user

Specific Key Ringback on Ring Again Request on EBS requires no activation or deactivation by the end user.

Billing

Specific Key Ringback on Ring Again Request on EBS does not affect billing.

Station Message Detail Recording

Specific Key Ringback on Ring Again Request on EBS does not affect Station Message Detail Recording.

Datafilling office parameters

Specific Key Ringback on Ring Again Request on EBS does not affect office parameters.

Specific Key Ringback on Ring Again Request on EBS (continued)

Datafill sequence

The following table lists the tables that require datafill to implement Specific Key Ringback on Ring Again Request on EBS. The tables are listed in the order in which they are to be datafilled.

Datafill tables required for Specific Key Ringback on Ring Again Request on EBS

Table	Purpose of table
KSETFEAT (Note)	Business Set and Data-Unit Feature. This table defines the line features assigned to business sets and data units.
KSETLINE (Note)	Business Set and Data-Unit Line Assignment. This table defines the hardware location of the business sets and data units and information about each DN appearance on the sets
CUSTSTN	Customer Group Station Option. This table contains the station options assigned to each customer group.
Note: This table is datafilled through SERVORD; therefore, no datafill procedure is provided.	

Datafilling table CUSTSTN

Table CUSTSTN (Customer Group Station Option) contains the station options assigned to each customer group. Specific Key Ringback on Ring Again Request on EBS creates option RAGRCOPT. When option RAGRCOPT is assigned to a customer group, ring again, network wide ring again, and call-back queuing only recall to an MBS when the set is idle. If option RAGRCOPT is not datafilled, recalls occur whether an MBS is idle or not.

The following table shows the datafill specific to Specific Key Ringback on Ring Again Request on EBS for table CUSTSTN. Only those fields that apply directly to Specific Key Ringback on Ring Again Request on EBS are shown.

Specific Key Ringback on Ring Again Request on EBS (continued)

For a description of the other fields, refer to the data schema section of this document.

Datafilling table CUSTSTN

Field	Subfield or refinement	Entry	Explanation and action
CUSTNAME		alphanumeric	Customer Group Name. This field specifies the 1- to 16-character alphanumeric name that is assigned to the customer group. Enter the customer group name.
OPTNAME		RAGRCOPT	Option Name. This field specifies the name of the option. Enter RAGRCOPT.
OPTION		see subfield	Option. This field consists of subfield OPTION.
	OPTION	RAGRCOPT	Option. This subfield specifies the name of the option. Enter RAGRCOPT.

Datafill example for table CUSTSTN

The following example shows sample datafill for table CUSTSTN.

MAP display example for table CUSTSTN

```
CUSTNAME          OPTNAME          OPTION
_________________________________________________
MDCGRP1           RAGRCOPT         RAGRCOPT
```

Translation verification tools

Specific Key Ringback on Ring Again Request on EBS does not use translation verification tools.

SERVORD

SERVORD limitations and restrictions

Specific Key Ringback on Ring Again Request on EBS has no SERVORD limitations and restrictions.

Specific Key Ringback on Ring Again Request on EBS (continued)

SERVORD prompts

The following table shows the SERVORD prompts used to assign Specific Key Ringback on Ring Again Request on EBS to a line.

SERVORD prompts for Specific Key Ringback on Ring Again Request on EBS

Prompt	Valid input	Explanation
DN_OR_LEN	7-digit DN or LEN	Specifies the 7-digit DN or LEN of the line to be changed
OPTKEY	1 to 69	Indicates the key on an MBS to which an option is assigned
OPTION	RAG	Specifies the option to be assigned to a line. Enter RAG.
Note: Tables KSETLINE and KSETFEAT are automatically datafilled when Specific Key Ringback on Ring Again Request on EBS is assigned using SERVORD.		

SERVORD example for adding Specific Key Ringback on Ring Again Request on EBS

The following SERVORD example shows how Specific Key Ringback on Ring Again Request on EBS is added to key 5 on an MBS set using the ADO (add option) command.

SERVORD example for Specific Key Ringback on Ring Again Request on EBS adding option RAG in prompt mode

```
>ADO
SONUMBER:     NOW  87 10 01 PM
>
DN_OR_LEN:
> 5554725
OPTKEY:
> 5
OPTION:
> RAG
OPTKEY:
> $
```

Specific Key Ringback on Ring Again Request on EBS (end)

SERVORD example for Specific Key Ringback on Ring Again Request on EBS adding option RAG in no-prompt mode

```
> ADO   $   5554725   5  RAG   $
```

4 Datafilling MDC PRO

The following chapter describes the MDC PRO, MDC00009, functionality.

ARS default public network routing

Ordering codes

Functional group ordering code: MDC00009

Functionality ordering code: MDC00060

Release applicability

NA009 and up

Prerequisites

ARS default public network routing has no prerequisites.

Description

ARS default public network routing addresses the cost of ownership associated with a form of automatic route selection (ARS) where private calls are sent through public translations to access special routing configurations based on the call type. This translations is typically done to allow private customers to use the public network rather than their private routes for non-billable calls. The private customer uses a `non-SNPA' serving translation scheme (STS) in public translations to gain access to private or public routes.

> ***Note:*** ARS is an overloaded term in DMS. In this feature, ARS is not related to the ARS selector of the DMS routing tables (like table IBNRTE), or to anything else known as ARS other than that described above. In this context, ARS refers to the “automatic" selection, through datafill, of the public or private routes.

Previously, when a new NPA/NXX was opened, the operating company had to maintain the HNPA datafill for ARS customers to prevent ARS calls from going to vacant code.

This feature adds a new optional field to table HNPACONT, and an option to this field called `ARS'. The ARS option has, in turn, an optional subfield called `DEFAULT_RTEREF'. With this feature in place, the operating company can avoid vacant code in these cases by datafilling the ARS option and the DEFAULT_RTEREF sub-option for their ARS HNPACONT tuples.

Operation

This features provides the operating company with an “ARS escape route" that handles ARS calls in the public network when the dialed code is not datafilled in subtable HNPACONT.HNPACODE.

Translations table flow

The ARS default public network routing translations tables are described in the following list:

- Table IBNLINES
- Table STDPRTCT
- Table STDPRT
- Table HNPACONT
- Table HNPACONT.HNPACODE
- Table HNPACONT.RTEREF
- Table HNPACONT.IBNRTE

The ARS default public network routing translation process is shown in the flowchart that follows.

ARS default public network routing (continued)

Table flow for ARS default public network routing

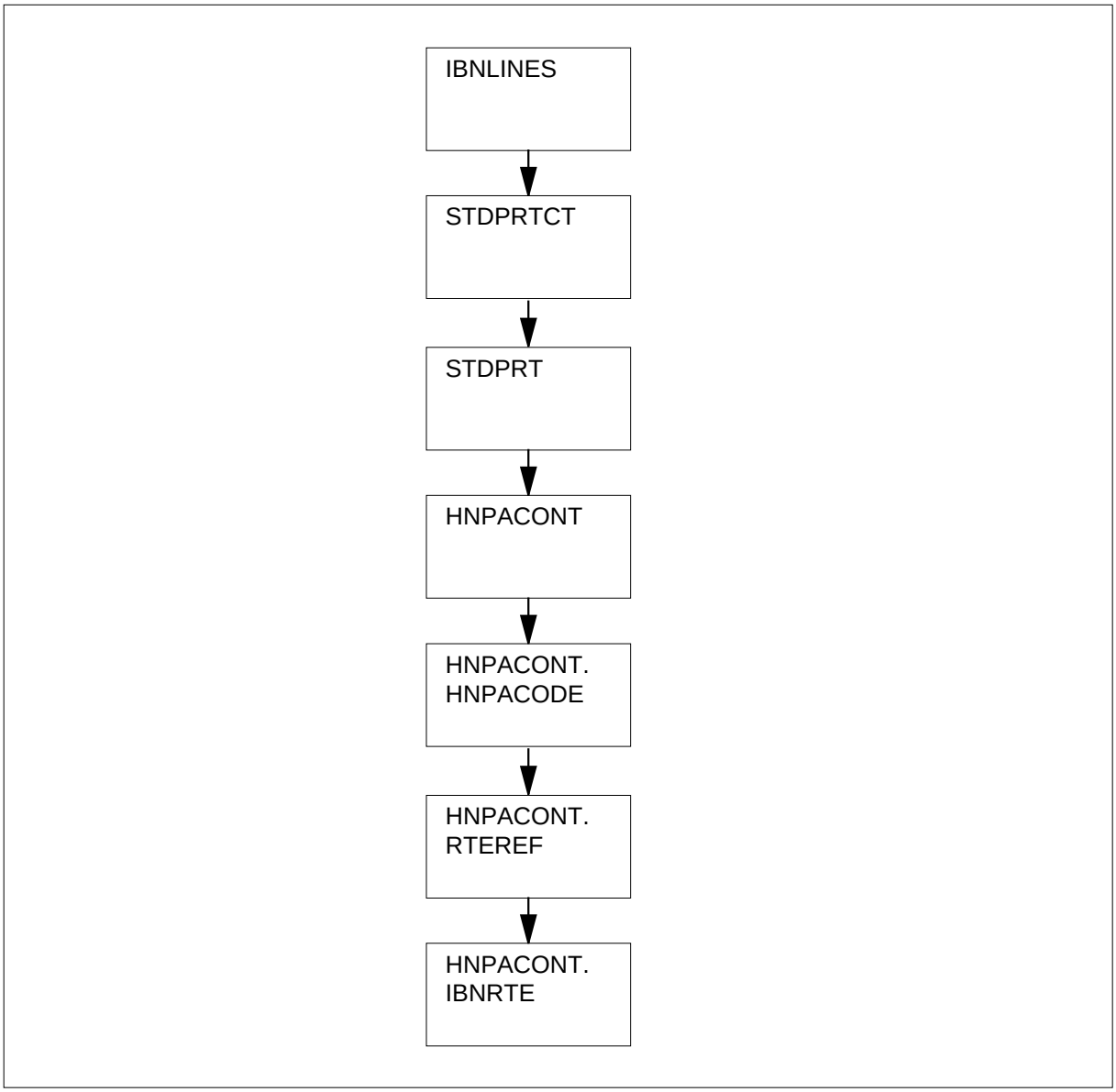

The following table lists the datafill content used in the flowchart.

Datafill example for ARS default public network routing (Sheet 1 of 2)

Datafill table	Example data
IBNLINES	HOST 00 0 00 14 0 DT STN IBN 6211234 COMKODAK 0 0 613 $
STDPRTCT	ARS1 (1) (65021) 0

ARS default public network routing (continued)

Datafill example for ARS default public network routing (Sheet 2 of 2)

Datafill table	Example data
STDPRT	16 19 N DD 1 NA
HNPACONT	001 Y 20 1 (5) (1) (3) (0) 1 *(ARS (DEFAULT_RTEREF 5)*$)$
HNPACODE	61 613 613 AMBI PFX HRTE 5 FRTE 43 613 AMBI PFX HRTE 5 FRTE 4
RTEREF	5 T IBNRTE 3
IBNRTE	3 VFG N N Y VFG1 0

Note: While the translations process involves several tables, only table HNPACONT requires datafill that is specific to ARS default public network routing. The following sections focus on table HNPACONT. The other tables are not discussed.

Limitations and restrictions

ARS default public network routing manipulates the dialed digits before sending the ARS call over the ARS default route; this is done so that a dialed prefix `1' can be restored to the dialed digits if necessary. Because of this, the route chosen as the ARS default route should not perform any digit manipulation itself (this can be ensured by using a DIGMAN index, or DMI, of 0).

When adding a new HNPACONT entry, the DEFAULT_RTEREF option cannot be added initially, since the HNPACONT tuple must reference a tuple that does not yet exist in subtable HNPACONT.RTEREF. To add a new HNPACONT tuple with the ARS option and the ARS DEFAULT_RTEREF suboption, follow these steps:

1. Add the HNPACONT tuple without the DEFAULT_RTEREF option (the ARS option can be added at this time)
2. Enter subtable HNPACONT.RTEREF and add the tuple that supports the HNPACONT tuple.
3. Return to the head table and change the HNPACONT tuple by adding the DEFAULT_RTEREF option.

Interactions

When the ARS option is datafilled (with or without the DEFAULT_RTEREF option), an LNP query is not done and the DN residency check is bypassed.

ARS default public network routing (continued)

Activation/deactivation by the end user

ARS default public network routing is activated through datafill.

Billing

ARS default public network routing does not affect billing.

Station Message Detail Recording

ARS default public network routing does not affect Station Message Detail Recording.

Datafilling office parameters

ARS default public network routing does not affect office parameters.

Datafill sequence

The following table lists the tables that require datafill to implement ARS default public network routing. The tables are listed in the order in which they are to be datafilled.

Datafill tables required for ARS default public network routing

Table	Purpose of table
HNPACONT	The home numbering plan area (HNPA) code subtables are as follows: • HNPACONT - List of home numbering plan area code subtables table record. • HNPACONT.HNPACODE - Home NPA code subtable record • HNPACONT.RTEREF - Home NPA route reference subtable record

Datafilling table HNPACONT

The following table shows the datafill specific to ARS default public network routing for table HNPACONT. Only those fields that apply directly to ARS

ARS default public network routing (continued)

default public network routing are shown. For a description of the other fields, refer to the data schema section of this document.

Note: The route entry in HNPACONT.RTEREF must be present before the route is referenced.

Datafilling table HNPACONT

Field	Subfield or refinement	Entry	Explanation and action
	ARS_ OPTION	DEFAULT_ RTEREF	*Automatic route selection option* Enter *DEFAULT_RTEREF* to select the default defined in subtable HNPACONT.RTEREF.
OPTIONS	RR	0 to 1023	*Extended route reference index* Enter the extended route reference index.

Datafill example for table HNPACONT

The following example shows sample datafill for table HNPACONT.

MAP display example for table HNPACONT

```
STS SNPA NORTREFS NOAMBIGC  RTEREF HNPACODE  ATTRIB  RTEMAP

OPTIONS
----------------------------------------------------------------------
001  N  64  159  (6)  (1)  (0)  (0)  0  (ARS  (DEFAULT_RTEREF  1)  $)$
```

ARS default public network routing (continued)

Error messages for table HNPACONT

The following error messages apply to table HNPACONT for ARS default public network routing.

Error messages for table HNPACONT

Error message	Explanation and action
`ARS default RTEREF must point to an entry in one of the IBN route tables (IBNRTE/2/3/4).`	The user has attempted to set the ARS default route to a route which is not in one of the IBN routing tables. Use an HNPACONT.RTEREF entry which points to one of the IBN routing tables (create one if necessary). See the section entitled “Datafilling Table HNPACONT" for instructions.

`The ARS DEFAULT_RTEREF must be added as follows:`
`-add the HNPACONT tuple without the DEFAULT_RTEREF option`
`-enter subtable RTEREF and add an entry`
`-change the HNPACONT tuple, adding the DEFAULT_RTEREF option`
	The user has attempted to add an HNPACONT entry with the ARS DEFAULT_RTEREF option (because the entry is being added, there is not yet any HNPACONT.RTEREF entries).
	Use an HNPACONT.RTEREF entry that points to one of the IBN routing tables (create one if necessary). See the section entitled “Datafilling Table HNPACONT" for instructions.

`The default rteref must be present in subtable RTEREF.`	The user has attempted to set the ARS default route to a non-existant HNPACONT.RTEREF entry. Find or create a valid HNPACONT.RTEREF entry to use for the ARS default route. Note that this entry must point to one of the IBN routing tables.
`Unknown ARS sub-option encountered, check swerr.`	This is a system error. Collect swerr and contact support personnel.
`Unknown HNPACONT option encountered, check swerr.`	This is a system error. Collect swerr and contact support personnel.

Translation verification tools

The following example shows the output from TRAVER when it is used to verify ARS default public network routing.

ARS default public network routing (continued)

TRAVER output example for ARS default public network routing

```
>traver l 6211234 916137221234 b
TABLE IBNLINES
HOST 00 0 00 14 0 DT STN IBN 6211234 COMKODAK 0 0 613 $
TABLE DNATTRS
TUPLE NOT FOUND
TABLE DNGRPS
TUPLE NOT FOUND
TABLE KSETFEAT
TUPLE NOT FOUND
TABLE CUSTSTN
COMKODAK AIN AIN CDPCODE
TABLE OFCVAR
AIN_OFFICE_TRIGGRP OFCTRIG
AIN Orig Attempt TDP: no subscribed trigger.
TABLE NCOS
COMKODAK 0 0 0 KDK0 ( OHQ 0 TONE_OHQ) ( CBQ 0 3 N 2) ( ACR N)$
TABLE CUSTHEAD: CUSTGRP, PRELIMXLA, CUSTXLA, FEATXLA, VACTRMT, AND
DIGCOL
COMKODAK PXDK CXDK FTCOMM 0 KDK
TABLE DIGCOL
KDK 9 RPT
NCOS PRELIM XLA name is NIL. Go to next XLA name.
TABLE IBNXLA: XLANAME PXDK
PXDK 9 NET N Y 1 Y POTS Y N GEN ( LATTR 80) ( EA NILC Y 0)$ $
TABLE DIGCOL
POTS specified: POTS digit collection
TABLE LINEATTR
80 IBN NONE NT NSCR 0 001 ARS1 ARS1... NILLATA 0 NIL NIL 00 N $
LCABILL OFF – BILLING DONE ON BASIS OF CALLTYPE
TABLE STDPRTCT
ARS1 (1) (65021) 0
. SUBTABLE STDPRT
. 16 19 N DD 1 NA
. SUBTABLE AMAPRT
. KEY NOT FOUND
. DEFAULT VALUE IS:   NONE OVRNONE  N
TABLE HNPACONT
001 Y 20 1 ( 5) ( 1) ( 3) ( 0) 1 (ARS (DEFAULT_RTEREF 5)$)$
 . SUBTABLE HNPACODE
 . USING DEFAULT ARS RTEREF, PUBLIC PREFIX DIGITS RESTORED.
 . SUBTABLE RTEREF
 .    5 T IBNRTE 3
 .  . TABLE IBNRTE
```

ARS default public network routing (end)

TRAVER output example for ARS default public network routing (continued)

```
 .  .    3 VFG N N Y VFG1 0
 .  . EXIT TABLE IBNRTE
EXIT TABLE HNPACONT
TABLE LCASCRCN
001 ARS1 (1) ARSP Y
 . SUBTABLE LCASCR
 . TUPLE NOT FOUND. DEFAULT IS NON–LOCAL
TABLE PFXTREAT
ARSP NP N NP UNDT
+++ TRAVER: SUCCESSFUL CALL TRACE +++

DIGIT TRANSLATION ROUTES

1 VFG: VFG1 16137221234 ST
TREATMENT ROUTES. TREATMENT IS: GNCT
1 T120
2 LKOUT

+++ TRAVER: SUCCESSFUL CALL TRACE +++
```

SERVORD

ARS default public network routing does not use SERVORD.

Authcode for MDR

Ordering codes

Functional group ordering code: MDC00009

Functionality ordering code: MDC00018

Release applicability

BCS29 and up

Prerequisites

To operate, Authcode for MDR has the following prerequisites:

- BAS Generic, BAS00003
- MDC PRO, MDC00009

Description

The Authcode for MDR feature is an enhancement to feature AF1455, MDR Data in the AMA Stream. This feature expands on feature AF1455 by providing new module code 102 (authorization code dialed). Authorization code (authcode) information is included in this new module code and appended to the AMA record.

An authcode is a set of digits dialed by the end user. Authcodes are used to identify the end user to the network, exclude unauthorized end users, assign a network class of service (NCOS) to an end user rather than to a station, and record the authcode in either a Station Message Detail Recording (SMDR) record or an Automatic Message Accounting (AMA) record for billing or analysis. This feature allows the authcode to be recorded in the AMA stream. This feature does not affect how authcodes function or their uses; it only affects the recording of authcodes in the AMA stream.

Operation

Since the Authcode for MDR feature is an enhancement to the MDR Data in the AMA Stream feature, it shares all functionality with that feature with the exception of adding module code 102. Refer to “MDR Data in the AMA Stream" for information on MDR in the AMA stream. This feature description focuses specifically on the addition of module code 102 and any changes this enhancement causes.

Module code 102 provides information concerning the dialing of authorization codes. The end user can enter an authcode before dialing the called number, after dialing the called number, or during the talking stage.

Authcode for MDR (continued)

This feature does not affect when an authcode is required by the end user. It only affects whether the authcode is recorded in an SMDR record (as it was before this feature) or whether module code 102 should be appended to the AMA record.

If the customer group is datafilled with option MDRRAO in Table CUSTSMDR and the end user dials an authcode, the authcode is recorded in the AMA stream. Otherwise, the authcode is recorded in the SMDR stream.

The Authcode for MDR feature only affects customer groups that are assigned option MDRRAO in Table CUSTSMDR. The size of AMA records generated by a customer group using an authcode and the MDR Data in the AMA Stream feature is increased by module code 102.

Translations table flow

Authcode for MDR does not change translations table flow for MDR data in the AMA stream. Refer to “MDR Data in the AMA Stream."

Limitations and restrictions

Authcode for MDR does not change limitations and restrictions for MDR data in the AMA stream. Refer to “MDR Data in the AMA Stream."

Interactions

Authcode for MDR has no functionality interactions. Refer to “MDR Data in the AMA Stream."

Activation/deactivation by the end user

Authcode for MDR requires no activation or deactivation by the end user.

Billing

The Authcode for MDR feature changes the format of AMA records by making use of module codes to attach authcode information. Before this feature was available, authcode information was only recorded in the SMDR stream. With this feature, if a switch is recording in Bellcore AMA format and the customer group is datafilled with option MDRRAO in Table CUSTSMDR, any authcode information dialed by an end user is recorded in module code 102 and appended to the AMA record. This feature only affects calls involving authcode.

Authcode for MDR (continued)

The following table lists the fields contained in module code 102

Module code 102 - authorization code dialed

Information	Number of characters
Module code 102	4
Significant digits in next field	4
Authorization code	16

The following three tables list the contents of the module code 102 fields.

Module code field

Character	Value	Meaning
1-3		Module code identification number
4		Sign (hex C)

Significant digits in next field field

Character	Meaning
1-3	Number of significant digits
4	Sign (hex C)

Authorization code field

Character	Meaning
1-15	Authorization digits dialed (right-justified)
16	Sign (hex C)

The following figure illustrates an example of module code 102.

Call code 102

```
MODULE CODE:102C SIG DIGITS NEXT FIELD:006C
 AUTHORIZATION_CODE:000000000123456C
```

Station Message Detail Recording

Authcode for MDR does not affect Station Message Detail Recording.

Datafilling office parameters

This feature creates extension block NUM_OF_MDR_EXT_BLOCKS. This office parameter controls the number of the MDR extension blocks that can be created. The value of this parameter should be based on the maximum number of MDR usage minutes during the peak hour of use. The default value is 100 when the feature is activated. An office not using MDRRAO should set this parameter to 0. NUM_OF_MDR_EXT_BLOCKS is activated by a cold restart. The memory requirement for each MDR extension block is 13 words. Underprovisioning for the parameter can cause the office to lose authcodes or account codes that are dialed by the MDC end user.

Offices using MDRRAO previously generated SMDR_RECORDING_UNITS for authcode calls. With this feature, the number of SMDR recording units can be reduced by the value of NUM_OF_MDR_EXT_BLOCKS. This is only advisable if the calculation for this parameter is based on traffic information.

Offices that do not have MDC or MDRRAO do not need to provision this parameter and should set NUM_OF_MDR_EXT_BLOCKS to 0. The value of this parameter should never exceed the number of LAMA recording units, nor should it exceed the number of MDC lines. Therefore, the smaller of the number of LAMA recording units or the number of MDC lines is the maximum value for NUM_OF_MDR_EXT_BLOCKS.

The following procedure identifies the datafill for NUM_OF_MDR_EXT_BLOCKS.

The following table shows the office parameters used by Authcode for MDR. For more information about office parameters, refer to *Office Parameters Reference Manual.*

Office parameters used by Authcode for MDR

Table name	Parameter name	Explanation and action
OFCENG	NUM_OF_MDR_EXT_BLOCKS	Controls the number of MDR extension blocks that can be created. Enter a value from 0 to 32,767. The default value is 100.

Datafill sequence

Authcode for MDR does not change datafill sequence for MDR data in the AMA stream. Refer to “MDR Data in the AMA Stream."

Translation verification tools

Authcode for MDR does not use translation verification tools.

Authcode for MDR (end)

SERVORD

Authcode for MDR does not use SERVORD.

Bellcore AMA Enhanced ARS Translations

Ordering codes

Functional group ordering code: MDC00009

Functionality ordering code: not applicable

Release applicability

BCS26 and up

Prerequisites

To operate, Bellcore AMA Enhanced ARS Translations has the following prerequisites:

- BAS Generic, BAS00003
- MDC Minimum, MDC00001

Description

This features does not create any changes in AMA record format. It does alter the method of producing existing records. Follow are the additions this feature makes to Automatic Route Selection (ARS) translations:

- An Integrated Business Network Outgoing Trunk (IBNTO) or an IBN Two-Way Trunk (IBNT2) can be designated as a special facility by adding the SPCLBLG option and the type of billing desired to the trunk group datafill. As long as the call terminates to an IBNTO or IBNT2 trunk with the special billing option assigned, an AMA record is generated, identifying the assigned billing type.
- The new (Plain old telephone service) POTS virtual facility group (VFG) option TOLLRST is added by this feature. This feature also allows POTS VFG option IBNPIC to override the primary interLATA carrier (PIC) of the VFG even when the line to the part of the call with VFG is not an equal access (EA) call.
- The option IBNPIC allows a primary interLATA carrier (PIC) assigned to an IBN line or to a customer group with the equal access (EA) option to be used to route an entire call.
- This feature changes the method of producing call codes 011, 021, 032, and 085. Refer to “Billing" in this feature description.

Bellcore AMA Enhanced ARS Translations (continued)

Operation

Option SPCLBLG

IBNTO and IBNT2 trunks may be designated as special facilities by adding option SPCLBLG to other types of billing. The types of billing are as follows:

- CCSA Common Control Switching Arrangement Sampling
- TDMTT Tandem Tie Trunk Facility
- FX Foreign Exchange Automatic Flexible Routing Facility
- ETS Electronic Tandem Switched Call Facility

Previous to this feature, the call type had to be direct dial (DD) in order for option SPCLBLG to generate a billing record. Now when a call terminates on an IBNT0 or IBNT2 trunk with option SPCLBLG, an AMA record is generated. The specific AMA record generated still depends on the type of special billing indicated by option SPCLBLG, however. The possible special billing designations and the AMA record generated for each one are shown in the following table.

Trunk types with SPCLBLG option	Call code generated
FX	Call Code 011
CCSA	Call Code 021
TDMTT	Call Code 032
ETS	Call Code 085

Note: Only one of the options shown can be added as a special billing option to a trunk group at one time. An attempt to add more than one special billing option to a trunk group results in a processing error.

These options are strictly special billing designations that an Operating Company can associate with IBNTO or IBNT2 trunk groups. Functionally, there is no difference between a CCSA, TDMTT, ETS, or FX facility and an IBN outgoing or two-way trunk facility. Refer to “Billing" in this feature description for detailed information on the call codes generated.

The FX, CCSA, TDMTT, and ETS options are terminating billing options when assigned to a trunk group. However, CCSA can operate as an originating billing option when assigned to an IBN line. CCSA and TDMTT can also be

assigned to Virtual Facility Groups. Refer to “Feature interactions" in this feature description.

Table VIRTGRPS

In Table VIRTGRPS (Virtual Facility Groups), the Call Detail Recording (CDR) option can be set to Y or N. If the CDR option is set to Y, an AMA record identified by call code 067 is generated. When the CDR option is set to Y and the CCSA (or TDMTT) option is assigned to the VFG in Table VIRTGRPS, an AMA record identified by call code 021 (032 if TDMTT) is produced instead of call code 067.

The following table summarizes the possible records generated when calls of different call types are translated using an incoming IBN VFG assigned the CCSA or TDMTT VFG options. For clarity, the following chart uses CCSA. This same situation exits for TDMTT, except that call code 032 is generated instead of call code 021.

VFG assigned CCSA	Routing and termination no special billing option	Heading
VFG with CCSA	IBN Trunk	CCSA (call code 021)
VFG with CCSA	IBN Line	CCSA (call code 021)
VFG with CCSA	POTS DD Translations	DD
VFG with CCSA	POTS EA Translations	EA
VFG with CCSA	POTS NP Translations	CCSA (call code 021)

Option IBNPIC

With this feature, the following applies to the IBNPIC option when assigned to the VFG:

- The first leg of the EA call can be NP when using a VFG to route the call. Then the call is identified as an EA call based on the retranslations from the VFG. If NP, the first leg does not use Equal Access translations and therefore does not generate an AMA record. When the first leg of the call is NP, the call is then only an EA call when the retranslations stage uses EA translations. The AMA record is then generated based on the second leg

Bellcore AMA Enhanced ARS Translations (continued)

of the call. If the call type is Equal Access (EA) for the first leg of the call, AMA records are generated for both legs of the call. Both records are not needed for recording. Therefore, setting call type to NP for the first leg of the call is the datafill that should be used.

- If the first leg of the call is EA, a PIC must have been assigned to the group or line. Otherwise, the call will be blocked.
- If option IBNPIC is assigned to the VFG, the PIC from the first leg of the call is used to route the call.
- If the call type is NP, only one AMA record is generated, based on translations for the second leg of the call.
- A call code 110 record is generated for the first leg of the call if the call type is EA. Another call code 110 record is generated for the retranslations from the VFG to the terminator part of the call.

POTS VFGs that have the EA option are allowed to carry equal access traffic. The VFGs use the PIC assigned to the VFG. When the IBNPIC option is present on the VFG, the software looks to see first if a PIC is assigned to the line. If not, software looks to see if the customer group is assigned a PIC.

Note: The EA PIC and the IBNPIC options are mutually exclusive. That is, Table Control will allow you to assign a PIC (using the EA PIC option) and the IBNPIC option to the VFG. However, the PIC on the VFG will not be used when the IBNPIC option is also present. The software will only look for the line or group PIC assigned to the first leg of the call when the IBNPIC option is assigned.

When the IBNPIC option is not present, the VFG PIC takes precedence and is used for the second leg of translation. Any PIC information (carrier and choice) used in the first leg of translation is ignored when the IBNPIC option is not assigned to the VFG.

Translations table flow

The Bellcore AMA Enhanced Automatic Route Selection Translations does not affect translations table flow.

Limitations and restrictions

The call code generation portion of this feature only applies to IBNTO and IBNT2 trunks and Bellcore AMA format.

The new option TOLLRST only applies to POTS VFGs. Also, IBN toll restrictions can only be datafilled in Table IBNXLA (IBN Translations) with the NET-DOD or the NET-GEN selectors.

The change to option IBNPIC only applies when using the NET-GEN or NET-DOD selectors in Table IBNXLA. However, note that a group PIC cannot be assigned in Table IBNXLA using the NET-DOD selector.

Interactions

The following paragraphs describe the interactions between Bellcore AMA Enhanced ARS Translations and other functionalities.

The ability to eliminate billing records from lines to VFGs for toll traffic is removed by this feature. If the first part of translations contains a call type of NP and the call terminates to the VFG, no billing record are produced for that part of the call. However, if the call type is changed to DD when the call terminates to the VFG, a billing record is produced. The DD call type indicates toll traffic and forces the generation of a billing record.

CCSA line option

Common Control Switching Arrangement (CCSA) service provides private communications facilities between Centrex and PBX end user locations. Certain IBN lines can be designated as members of the CCSA network by assigning the CCSA option.

Non-billable calls (datafilled as NP in subtable STDPRT) originating on an IBN line assigned the CCSA option produce an AMA record identified by call code 021. Billable calls (datafilled in subtable STDPRT as DD) originating from an IBN line assigned the CCSA option, do not generate an AMA record identified by call code 021. The CCSA option is ignored for billable (DD) calls.

When the CCSA line option is assigned, call code 021 is generated based on the attributes of the originating station, rather than the attributes of the terminating station. Calls can be originated from CCSA stations and can be routed to CCSA or to non-CCSA stations, both generating call code 021.

The CCSA line option is assigned in Table IBNLINES using SERVORD.

When determining the type of billing record to generate, table software checks for the CCSA option assigned to a line and generates an 021 record if no other billing requirements exist. Therefore, the CCSA line option is assigned a low priority for AMA recording. The following table summarizes billing records

Bellcore AMA Enhanced ARS Translations (continued)

produced for different call types when the call is originated from a line with the CCSA option assigned.

Call type		CCSA line option	No CCSA option
Direct Dial	(DD)	DD AMA Record	DD AMA Record
No Prefix	(NP)	CCSA AMA Record	No Record
Equal Access	(EA)	EA AMA Record	EA AMA Record

A billable (DD) call originated from a CCSA or non-CCSA line produces a DD AMA record. An Equal Access (EA) call originated from a CCSA or non-CCSA line, produces a billable EA AMA record. However, a non-billable (NP) call originated from a CCSA line produces an 021 AMA record to identify the line as part of the CCSA network. An AMA record is not generated when a non-billable (NP) call is originated from a non-CCSA line.

If the SDY (study) and CCSA options are both assigned to an IBN line, the CCSA option takes precedence for the originating line. The CCSA option, however, has no effect on the SDY option for terminating lines.

CCSA VFG option

The CCSA and TDMTT options can also be assigned to an IBN incoming Virtual Facility Group. A VFG with option CCSA assigned, generates an AMA record in Bellcore AMA format identified by call code 021. This record identifies the VFG as a member of a CCSA network.

> ***Note:*** Generating call codes 021 and 032 is based on the attributes of the originating facility (incoming VFG). The CCSA and TDMTT VFG options are applicable to incoming IBN VFGs only.

The CCSA (or TDMTT) option assigned to the VFG takes lowest priority in determining the type of billing record generated for the call. For instance, a CCSA VFG terminating using POTS DD or POTS EA billable translations will not generate call code 021. Therefore, call code 021 is produced when no other billing options apply to the call. AMA records generated by assigning the CCSA option in Table VIRTGRPS are used for study purposes to identify members of the CCSA network.

Activation/deactivation by the end user

Bellcore AMA Enhanced ARS Translations requires no activation or deactivation by the end user.

Billing

If the CCSA or TDMTT options are assigned to the VFG and the call terminates to an IBNTO or IBNT2 trunk with the CCSA or TDMTT option assigned, only one AMA record is generated. The terminating billing takes priority over the VFG billing. Therefore, the call code associated with the special billing option assigned to the trunk group is generated.

Bellcore AMA Enhanced Automatic Route Selection Translations does not create any changes in AMA record format. It does alter the method of producing the records for call codes 011, 021, 032, and 085. For details on these call codes, refer to *Bellcore Format Automatic Message Accounting Reference Guide*.

This feature removes the capability of eliminating billing records from lines to VFGs for DD call type. With ARS, the first part of translations must contain a call type of NP when the route contains a combination of dedicated trunks and VFGs. If a call terminates to a VFG when the call type is NP, no billing record is produced.

However, if the call type is changed to DD and a call terminates to a VFG, a billing record is produced. The DD call type indicates toll traffic and forces the generation of a billing record. If the call type is datafilled as DD in both parts of a call, then two billing records are produced. This is because the call type DD is generated for the originating line to the VFG, and from the VFG to the terminator.

Station Message Detail Recording

Bellcore AMA Enhanced ARS Translations does not affect Station Message Detail Recording.

Datafilling office parameters

Bellcore AMA Enhanced ARS Translations does not affect office parameters.

Bellcore AMA Enhanced ARS Translations (continued)

Datafill sequence

The following table lists the tables that require datafill to implement Bellcore AMA Enhanced ARS Translations. The tables are listed in the order in which they are to be datafilled.

Datafill tables required for Bellcore AMA Enhanced ARS Translations

Table	Purpose of table
VIRTGRPS	Virtual Facility Groups. This table provides a way to eliminate loop-around trunks.
VFGDATA (Note)	Virtual Facility Group Data Table. Each tuple in table VFGDATA contains the data for one end of the virtual facility group (VFG).
TRKGRP (IBNTO)	Trunk Group. This table contains some of the end user defined data associated with each trunk group existing in the switching unit.
TRKGRP (IBNT2)	Trunk Group. This table contains some of the end user defined data associated with each trunk group existing in the switching unit.
Note: Changing Table VIRTGRPS automatically changes Table VFGDATA; therefore, no datafill procedure is provided.	

Datafilling table VIRTGRPS

Table VIRTGRPS (Virtual Facility Groups) provides a way to eliminate loop-around trunks.

The OPTION field in Table VIRTGRPS now contains option TOLLRST. This new option allows a toll restriction to be carried through the second leg of translations. This option can be used when terminating to a VFG and retranslations are occurring.

The following table shows the datafill specific to Bellcore AMA Enhanced ARS Translations for table VIRTGRPS. Only those fields that apply directly

to Bellcore AMA Enhanced ARS Translations are shown. For a description of the other fields, refer to the data schema section of this document.

Datafilling table VIRTGRPS

Field	Subfield or refinement	Entry	Explanation and action
	BILLNUM	1 - 11 digits	Billing Number. Enter the Billing number (1-11 digits) to which the next leg of the call is to be charged.
OPTIONS		see subfield	Options. Enter the list of options and associated subfields that are assigned to the VFG. Each option and its subfield must be separated by a space.
	OPTION	TOLLRST	Option. This subfield specifies the option to be assigned. Enter TOLLRST.

Datafill example for table VIRTGRPS

The following example shows sample datafill for table VIRTGRPS.

MAP display example for table VIRTGRPS

```
 VIRTGRPS
KEY                                        DATA
                                         OPTIONS
_____________________________________________________________
ARSVFG        SIZE  3  POTS  9195559424  0  N
                            (IBNPIC)  (TOLLRST) $
```

Datafilling table TRKGRP

Table TRKGRP (Trunk Group) contains some of the end user defined data associated with each trunk group existing in the switching unit. Field SPCLBLG for IBNTO and IBNT2 trunks is changed to field FACTYPE to better reflect the function of the field. The facility types currently associated with field SPCLBLG (CCSA, FX, TDMTT, and ETS) are the same for field FACTYPE. Each of these facility options produces different billing records associated with the customer group to which the trunk belongs.

The following table shows the datafill specific to Bellcore AMA Enhanced ARS Translations for table TRKGRP. Only those fields that apply directly to

Bellcore AMA Enhanced ARS Translations (continued)

Bellcore AMA Enhanced ARS Translations are shown. For a description of the other fields, refer to the data schema section of this document.

Datafilling table TRKGRP

Field	Subfield or refinement	Entry	Explanation and action
GRPKEY		IBNTO, IBNT2	Trunk Group Key. This field contains the Common Language Location Identifier (CLLI) associated with the trunk. Ideally, it defines the type of trunk group. Enter IBNT0 or IBNT2.
GRPINFO		see subfields	Group Information. This field consists of several subfields. Only subfields CUSTNAME and OPTIONS apply to this feature.
	CUSTNAME	alphanumeric (1 - 16 characters)	Customer Group Name. This subfield defines the name of the customer group. Enter the 1- to 16-character name of the customer group to which the trunk group belongs.
	OPTIONS	OPTION	Options. This subfield consists of subfield OPTION.
	OPTION		Option. This subfield specifies the options and associated subfields assigned to the trunk group. Enter FACTYPE and the trunk type required.
If OPTION is set to FACTYPE, subfields CCSA, TDMTT, FX, or ETS require datafill.			
	CCSA	CCSA	Common Control Switching Arrangement. This subfield specifies the common control switching arrangement. Enter CCSA.
	TDMTT	TDMTT	Tandem Tie Trunk. This subfield specifies the tandem tie trunk. Enter TDMTT.
	FX	FX	Automatic Flexible Routing. This subfield specifies the automatic flexible routing. Enter FX.
	ETS	ETS	Electronic Tandem Switched Call. This subfield specifies the electronic tandem switched call. Enter ETS.

Datafill example for table TRKGRP

The following example shows sample datafill for table TRKGRP.

Bellcore AMA Enhanced ARS Translations (continued)

MAP display example for table TRKGRP

```
 TRKGRP
GRPKEY


GRPINFO
_____________________________________________________________
 CARYIBNTO
      IBNTO 0 ELO NCBN COMKODAK 0 MIDL ANSDISC 0 N 0 0 8
9
       N  N  N  N  N  N  (FACTYPE CCSA) $
```

Translation verification tools

The following example shows the output from TRAVER when option SPCLBLG is used during a DD call type.

Bellcore AMA Enhanced ARS Translations (continued)

TRAVER output example for Bellcore AMA Enhanced ARS Translations

```
>TRAVER L 6217858 66093331212 B
TABLE IBNLINES
HOST 00 0 00 09 DT STN IBN 6215878 IBNTST 0 0 613 $
TABLE NCOS
IBNTST 0 0 0 TST10 ( XLAS CXT1 NXLA NDGT) ( OHQ 0 SILENCE)
TABLE CUSTHEAD: CUSTGRP, PRELIMXLA, CUSTXLA, FEATXLA,
   AND DIGCOL
IBNTST NXLA CXT3 NXLA 0 TST1
TABLE DIGCOL
TUPLE NOT FOUND
Default is RPT
TABLE IBNXLA: XLANAME CXT1
CXT1 6 NET N N 1 Y POTS N N GEN (LATTR 0)$
TABLE DIGCOL
POTS specified: POTS digit collection
TABLE LINEATTR
0 1FR NONE NT NSCR 2 003 ARSE NLCA TOPS N 10 NIL NILSFC
   NILLATA 0 NIL NIL
TABLE STDPRTCT
ARSE ( 1) ( 0)
 . SUBTABLE STDPRT
 . 609 609 N DD 0 NA
 . SUBTABLE AMAPRT
 . DEFAULT VALUE IS:   NONE   N
TABLE HNPACONT
003 128 2 ( 44) ( 1) ( 0)
 . SUBTABLE HNPACODE
 . 609 609 FRTD 33
 . SUBTABLE RTEREF
 .    33 T IBNRTE 1
 .  . TABLE IBNRTE
 .  .    1 S N N N CARYIBNTO
 .  . EXIT TABLE IBNRTE
 . EXIT TABLE RTEREF
EXIT TABLE HNPACONT
+++ TRAVER: SUCCESSFUL CALL TRACE +++

DIGIT TRANSLATION ROUTES
1 CARYIBNTO       6093331212    ST
+++ TRAVER: SUCCESSFUL CALL TRACE +++
```

In the above example, line 21 shows the DD call type and line 31 is a trunk with option SPCLBLG applied. In this example, call code 021 is generated.

Bellcore AMA Enhanced ARS Translations (end)

The following example shows the output from TRAVER when option SPCLBLG is used during an NP call type.

TRAVER output example for Bellcore AMA Enhanced ARS Translations

```
>TRAVER L 6217858 86093331212 B
TABLE IBNLINES
HOST 00 0 00 09 DT STN IBN 6215878 IBNTST 0 0 613 $
TABLE NCOS
IBNTST 0 0 0 TST10 ( XLAS CXT1 NXLA NDGT) ( OHQ 0 SILENCE)
TABLE CUSTHEAD  CUSTGRP, PRELIMXLA, CUSTXLA, FEATXLA,
   AND DIGCOL
IBNTST NXLA CXT3 NXLA 0 TST1
TABLE DIGCOL
TUPLE NOT FOUND -- Default is RPT
TABLE IBNXLA: XLANAME CXT1
CXT1 5 NET N N 1 Y POTS N N GEN (LATTR 1)$
TABLE DIGCOL
POTS specified: POTS digit collection
TABLE LINEATTR
1 1FR NONE NT NSCR 2 003 ARSF NLCA TOPS N 10 NIL NILSFC
   NILLATA 0 NIL NIL
TABLE STDPRTCT
ARSF ( 1) ( 0)
 . SUBTABLE STDPRT
 . KEY NOT FOUND
 . DEFAULT VALUE IS:   N NP 0 NA
TABLE HNPACONT
003 128 2 ( 44) ( 1) ( 0)
 . SUBTABLE HNPACODE
 . 609 609 FRTD 33
 . SUBTABLE RTEREF
 .    33 T IBNRTE 1
 .  . TABLE IBNRTE
 .  .    1 S N N N CARYIBNTO
 .  . EXIT TABLE IBNRTE
 . EXIT TABLE RTEREF
EXIT TABLE HNPACONT
+++ TRAVER: SUCCESSFUL CALL TRACE +++

DIGIT TRANSLATION ROUTES
1 CARYIBNTO     6093331212    ST
```

In the above example, line 21 shows the NP call type and line 29 is a trunk with option SPCLBLG applied. In this example, call code 021 is also generated.

BOC AMA Call Code 032

Ordering codes

Functional group ordering code: MDC00009

Functionality ordering code: MDC00018

Release applicability

BCS29 and up

Prerequisites

To operate, BOC AMA Call Code 032 has the following prerequisites:

- BAS Generic, BAS00003
- MDC PRO, MDC00009

Description

The BOC AMA Call Code 032 feature allows the operating company to designate an IBN two-way or outgoing trunk as a common control signaling arrangement (CCSA) or a tandem tie trunk (TDMTT).

If a trunk group is designated as CCSA, calls routed through the trunk are recorded with code 021. Calls routed through the TDMTT trunk group are recorded as a code 032. These codes provide special billing designations that are automatically identified when the CCSA or TDMTT trunk group is accessed. With option TDMTT, up to 24 digits can be dialed. The feature does not add any new trunk group types.

Operation

CCSA and TDMTT are special billing designations that an operating company can associate with either new or existing IBNTO and IBNT2 trunk groups.

The CCSA or TDMTT designation is identified through datafill in Table TRKGRP. For billing to work properly, the calls routed through a CCSA or TDMTT must be identified in datafill as DOD DD (direct outward dialing direct dialing). Structure codes for the call codes and the condition corresponding to each are as follows:

Call code 021—(CCSA)

- 00001 answered
- 00002 unanswered
- 00101 long duration

Call code 032—(TDMTT)

- 00025 answered
- 00025 unanswered
- 00125 long duration

Translations table flow

The BOC AMA Call Code 032 does not affect translations table flow.

Limitations and restrictions

BOC AMA Call Code 032 has no limitations or restrictions.

Interactions

BOC AMA Call Code 032 has no functionality interactions.

Activation/deactivation by the end user

BOC AMA Call Code 032 requires no activation or deactivation by the end user.

Billing

BOC AMA Call Code 032 does not affect billing.

Station Message Detail Recording

BOC AMA Call Code 032 does not affect Station Message Detail Recording.

Datafilling office parameters

BOC AMA Call Code 032 does not affect office parameters.

Datafill sequence

The following table lists the tables that require datafill to implement BOC AMA Call Code 032 . The tables are listed in the order in which they are to be datafilled.

Datafill tables required for BOC AMA Call Code 032

Table	Purpose of table
TRKGRP	Trunk Group. This table contains information about trunk groups.

Datafilling table TRKGRP

Table TRKGRP (Trunk Group) contains some of the customer-defined data associated with each trunk group existing in the switching unit.

BOC AMA Call Code 032 (continued)

The following table shows the datafill specific to BOC AMA Call Code 032 for table TRKGRP. Only those fields that apply directly to BOC AMA Call Code 032 are shown. For a description of the other fields, refer to the data schema section of this document.

Datafilling table TRKGRP

Field	Subfield or refinement	Entry	Explanation and action
GRPKEY		see subfield	Group Key: This field consists of subfield CLLI.
	CLLI	trunk group code	Common Language Location Identifier This subfield specifies the code which is assigned to the trunk group in the CLLI table. Enter the code.
GRPTYP		IBNTO or IBNT2	Trunk Group Type: This field specifies the trunk group type outgoing or the trunk group type two way. Enter IBNTO or IBNT2.
OPTION		FACTYPE	Option: This field specifies the facility type option. Enter FACTYPE.
FACTYPE		CCSA, TDMTT, FX, or ETS	Facility Type: This field specifies the facility type. Enter CCSA (common control switching arrangement), TDMTT (tandem tie trunk), FX (automatic flexible routing), or ETS (electronic tandem switched call).

Datafill example for table TRKGRP

The following example shows sample datafill for table TRKGRP.

MAP display example for table TRKGRP

```
 TRKGRP

 GRPKEY

GRPINFO
_____________________________________________________________
MDCTRK
  IBNT2  3 PRAC NCON E911  0  ASEQ 0 $ ANSDISC 0 N N N N
    N N Y 5 2 Y 4 4 4 4 Y Y Y N N N N N N N  (FACTYPE
CCSA) $
```

Translation verification tools

BOC AMA Call Code 032 does not use translation verification tools.

BOC AMA Call Code 032 (end)

SERVORD

BOC AMA Call Code 032 does not use SERVORD.

CCSA Line Option

Ordering codes

Functional group ordering code: MDC00009

Functionality ordering code: not applicable

Release applicability

BCS20 and up

Prerequisites

To operate, CCSA Line Option has the following prerequisites:

- BAS Generic, BAS00003
- MDC Minimum, MDC00001

Description

CCSA Line Option allows an operating company to assign the CCSA option to an MDC line. A common control switching arrangement (CCSA) consists of operating company switching facilities that are connected to leased corporate tie-line networks. Common control central office switching equipment performs the switching functions for leased lines in the network. CCSA allows all stations in the network to dial one another regardless of the distance and without using exchange or toll facilities. Stations can also dial outside the network by using local, foreign exchange, or wide area telephone service (WATS) lines.

CCSA Line Option is used for billing purposes to identify the station as being a member of a CCSA network. Assigning the CCSA option to an MDC station causes a detailed Automatic Message Accounting (AMA) record to be generated. This AMA record is uniquely identified with a call code of 021. An 021 AMA record is produced only when no other billing requirements exist for the call. The CCSA option can only be assigned to MDC stations with a line class code of IBN.

The CCSDATA option in table AMAOPTS controls the precedence of Call Code 021 over Call Code 072 for CCSA data calls. It has no effect on non-CCSA calls. If the call is a CCSA data call and the CCSADATA option is set to ON in table AMAOPTS, the Call Code 072 record is replaced by a Call Code 021 record.

Operation

Operation of CCSA Line Option is transparent to the end user and is activated solely through datafill.

Translations table flow

CCSA Line Option does not affect translations table flow.

Limitations and restrictions

CCSA Line Option has no limitations or restrictions.

Interactions

CCSA Line Option has no functionality interactions.

Activation/deactivation by the end user

CCSA Line Option requires no activation or deactivation by the end user.

Billing

CCSA Line Option does not affect billing.

Station Message Detail Recording

CCSA Line Option does not affect Station Message Detail Recording.

Datafilling office parameters

CCSA Line Option does not affect office parameters.

Datafill sequence

The following table lists the tables that require datafill to implement CCSA Line Option. The tables are listed in the order in which they are to be datafilled.

Datafill tables required for CCSA Line Option

Table	Purpose of table
AMAOPTS	Table AMAOPTS controls the activation and scheduling of the recording options for local, toll, and high-revenue calls.
IBNLINES	The IBN line assignment table contains the line assignments for all IBN and RES lines, and AC station numbers.
Note: This table is datafilled through SERVORD; therefore, no datafill procedure is provided.	

Datafilling table AMAOPTS

Table AMAOPTS controls the activation and scheduling of the recording options for local, toll, and high-revenue calls. It contains one tuple for every option. A schedule, associated with every option, defines whether an option is active, active only at certain times, or not active.

CCSA Line Option (continued)

The following table shows the datafill for table AMAOPTS. Only those fields that apply directly to CCSA are shown. For a description of the other fields, refer to the data schema section of the *Translation Guide*.

Datafill example for table AMAOPTS

The following example shows sample datafill for table AMAOPTS.

```
OPTION                                                  SCHEDULE
_______________________________________________________________
CCSADATA                                                     OFF
```

Translation verification tools

CCSA Line Option does not use translation verification tools.

SERVORD

Option CCSA is assigned using the Service Order System (SERVORD) command ADO (add option). The DEO (delete option) command is used to remove option CCSA. Option CCSA allows all stations in a CCSA to dial one another regardless of distance and without using exchange or toll facilities.

The following table shows the SERVORD prompts used to assign CCSA Line Option to an existing line.

SERVORD limitations and restrictions

CCSA Line Option has no SERVORD limitations and restrictions.

SERVORD prompts

The following table shows the SERVORD prompts used to change CCSA Line Option to a destination.

SERVORD prompts for CCSA Line Option

Prompt	Valid input	Explanation
DN_OR_LEN	7-digit DN or LEN	Specifies the 7-digit DN or LEN of the line to be changed. Enter the DN or LEN.
OPTION	CCSA	Indicates the name of the option. Enter CCSA.
Note: Table IBNLINES is automatically datafilled when CCSA Line Option is assigned using SERVORD.		

CCSA Line Option (end)

SERVORD example for adding CCSA Line Option

The following SERVORD examples show how CCSA Line Option is added to <destination> using the CCSA Line Option command.

SERVORD example for CCSA Line Option in prompt mode

```
SO:

> ADO
SONUMBER:    NOW 87 10 10 PM
>
DN_OR_LEN:
> 6211011
OPTION:
> CCSA
OPTION:
> $
```

SERVORD example for CCSA Line Option in no-prompt mode

```
> ADO  $  6211011  CCSA  $
```

Customer Administration of Data

Ordering codes

Functional group ordering code: MDC00009

Functionality ordering code: not applicable

Release applicability

BCS19 and up

Prerequisites

To operate, Customer Administration of Data has the following prerequisites:

- BAS Generic, BAS00003
- MDC Minimum, MDC00001

Description

Customer Administration of Data enables the telephone operating company to define the access rights that a nontelephone company end user has to existing table editor functions and tables. The nontelephone company end user can then log into the DMS switch in the same way as for customer data change (CDC) and access data within the tables to which the telephone company has given access. This feature is an extension of feature BV1552, Customer Network Data Changes and uses the partition table editor (PTE) command

Operation

Feature BV1552, Customer Network Data Changes, introduced the concept of data ownership, in which a USER_ID is assigned an OWNER_ID, which is then associated with the data that the end user owns. Data ownership is defined in Tables CDCLENS (Customer Data Change Line), CDCDNS (Customer Data Change DN), and DATAOWNR (Data Owner). End users can access only the data that they own or data that is defined as PUBLIC by the telephone company.

The partitioned table editor (PTE) command is designed for end user manipulation of data tables. Nontelephone company end users can access tables only through the PTE command and only those tables for which they have been assigned access rights. The access rights can be one of the following:

- READ ONLY - end user can read the table
- CHANGE ONLY - end user can change the existing tuples in the table
- READ WRITE - end user can add tuples to or delete tuples from the table

Customer Administration of Data (continued)

Table VIRTGRPS (Virtual Facility Groups) is used to simulate, in software, finite resources such as lines or trunks. When a facility group is accessed from Table IBNRTE (IBN Route), the switch determines if there are any virtual facilities available. If there are no virtual facilities available, the call is blocked; otherwise, the facility is marked as used, and the call is routed.

The data for the trunks, which are distributed among multiple tuples in each of several tables, is contained in a single tuple in Table VIRTGRPS. It is difficult to enforce ownership of the tuples because one tuple contains fields that can be owned by three different owners:

- the two CUSTGRPs, one each for the incoming and outgoing ends of the virtual facility group (VFG)
- the telephone company's size information

To solve this ownership problem, this feature creates two new tables, Table VFGDATA (Virtual Facility Group Data) and Table VFGENG (Virtual Facility Group Engineering). These tables together contain three new tuples, which represent each tuple in Table VIRTGRPS. Each tuple in Table VFGDATA contains the data for one end of the VFG. Each end can be an IBN VFG or POTS VFG and can be either incoming or outgoing. Table VFGENG contains the size information for each VFG.

User interface

This feature creates a new command interpreter (CI) command, LISTTABS, which does the following:

- lists the tables to which the end user has access
- specifies the type of access the end user has to each table (READ WRITE, READ ONLY, or CHANGE ONLY)
- specifies whether or not ownership has been applied to each table

The following is an example of the execution of the LISTTABS command by an end user.

Customer Administration of Data (continued)

```
CI:
>LISTTABS

TABLE   ACCESS          OWNERSHIP
=====================================
TODHEAD READ WRITE          Y
DAYOWEEK    READ ONLY       Y
OHIP    CHANGE ONLY         N
REPLNAME    READ ONLY       N
DAYOYEAR    CHANGE ONLY     Y
```

Translations table flow

Customer Administration of Data does not affect translations table flow.

Limitations and restrictions

Customer Administration of Data has no limitations or restrictions.

The following limitations and restrictions apply to Customer Administration of Data:

- An owner of a VFG can change the NCOS, LSC, and ALSC of that VFG through the Service Order System (SERVORD). If the owner also has change access to Table VFGENG, he or she can change the size information of the VFG.
- An owner of one end of a VFG who has change access to Table VFGDATA can change all the data related to that end of the VFG. There is no need to change the data through SERVORD.
- Nontelephone company end users who own both ends of a VFG and the size information of the VFG should own the VFG in Table DATAOWNR.
- Nontelephone company end users who own only one end of a VFG, or own both ends of a VFG but do not own the size information of the VFG, should own only the VFG ENDS information in Table DATAOWNR.
- Nontelephone company end users should be allowed access only to tables that are datafilled in Table OWNTAB (Ownership). If a table is not datafilled in Table OWNTAB, the telephone operating company should assign the table a privilege class that nontelephone company end users will not be assigned.

Customer Administration of Data (continued)

- The following tables, which create new data when tuples are added to them, should be assigned access rights of READ ONLY or CHANGE ONLY for nontelephone company end users:
  - Table XLANAME (List of Translator Names)
  - Table HNPACONT (List of HNPA Code Subtables)
  - Table FNPACONT (List of FNPA Code Subtables)
  - Table FNPACONT.FNPASTS (List of FNPA STS Codes Subtables)
  - Table LCASCRCN (Local Calling Area Screening Control)
  - Table CLSVSCRC (Class of Service Screening Control)
  - Table COSMAP (Network Class of Service Mapping)
  - Table STDPRTCT (List of Standard Pretranslation Tables)
  - Table DIGCOL (IBN Digit Collection)
  - Table TODHEAD (Time of Day Head)
  - Table VFGENG (Virtual Facility Group Engineering)
  - Table IBNRTE (IBN Route)
- Nontelephone company end users can enter only T or SK for field CONDRTE of Table IBNRTE.
- Nontelephone company end users can enter only IBNRTE for field TABNAME when specifying T-type routes in Tables IBNXLA (IBN Translation) and IBNRTE.
- In the following types of fields, CDC end users are restricted to entering only data that belong to the CDC end user or to a public owner:
  - VFG_BILLING_REGISTER
  - CUSTOMER GROUP
  - LINE_ATTRIBUTES_INDEX
  - IBN_XLA_NAME
  - LINE_SCREENING_CODE
  - SUBGRP_DN
  - SERVING_TRANSLATION_SCHEME
  - PRETRANSLATOR_NAME
  - SCREENING_CLASS

Customer Administration of Data (continued)

Interactions

The following paragraphs describe the interactions between Customer Administration of Data and other functionalities.

This feature interacts with feature BV1552, Customer Network Data Changes as described in “Operation" in this feature description.

Activation/deactivation by the end user

Customer Administration of Data requires no activation or deactivation by the end user.

Billing

Customer Administration of Data does not affect billing.

Station Message Detail Recording

Customer Administration of Data does not affect Station Message Detail Recording.

Datafilling office parameters

Datafill procedure for CUSTOMER_DATA_CHANGE_LOGS

CUSTOMER_DATA_CHANGE_LOGS, an office parameter in Table OFCVAR (Variable Office), controls whether the DMS switch generates a CDC101 and CDC102 log report each time a CDC end user issues a SERVORD or PTE command. To activate command logging, the operating company must set the office parameter to Y.

The following procedure identifies the datafill for CUSTOMER_DATA_CHANGE_LOGS.

The following table shows the office parameters used by Customer Administration of Data. For more information about office parameters, refer to *Office Parameters Reference Manual.*

Datafill procedure for CUSTOMER_DATA_CHANGE_LOGS

Table name	Parameter name	Entry	Explanation and action
OFCVAR	CUSTOMER_DATA_CHANGE_LOGS	Y or N	Indicates whether the DMS switch generates a CDC101 or CDC102 log report each time a CDC end user issues a SERVORD or PTE command. Enter Y or N. The default value is N.

Datafill sequence

The following table lists the tables that require datafill to implement Customer Administration of Data. The tables are listed in the order in which they are to be datafilled.

Datafill tables required for Customer Administration of Data (Sheet 1 of 2)

Table	Purpose of table
OWNER	Owner Table. This table defines an owner ID and specifies whether other owner IDs are allowed to view their office data. An owner ID can be associated with more than one customer group.
CDCLENS	Customer Data Change Line Table. This table lists the line equipment numbers that are assigned to a customer group that has customer data change ability.
IBNLINES (Note)	IBN Line Assignments Table. This table contains the line assignments for data channel links for the Bulk Calling Line Identification (BCLID) feature under the format name of BL.
KSETINV (Note)	Business Set and Data-Unit Inventory Table. This table contains the line assignments for business sets.
CDCLOGON	Customer Data Change Logon Table. This table lists the logon user name associated with an owner name
Note: This table is datafilled through SERVORD; therefore, no datafill procedure is provided. Refer to “SERVORD" for an example of using SERVORD to datafill this table.	

Customer Administration of Data (continued)

Datafill tables required for Customer Administration of Data (Sheet 2 of 2)

Table	Purpose of table
CDCDNS	Customer Data Change Directory Number Table. This table lists the directory numbers assigned to a customer group that has customer data change capability. One entry is required for each single DN or block of consecutive DNs that are assigned to the customer group.
CDCOPTS	Customer Data Change Line Option Table. This table lists the line options that are assigned to a customer group that has customer data change capability. If a customer group has no entry in this table, the CDC users who own a line assigned to that customer cannot add any options to the line.
DATAOWNR	Data Owner Table. The customer data change (CDC) system enables the operating company to provide non-operating company users with the ability to view or change certain data on the switch. Each owner is identified by a unique owner name that corresponds to one or more CDC users.
VFGDATA	Virtual Facility Group Data. This table contains the data for one end of a VFG. Each end of a VFG can be an IBN VFG or a plain old telephone service (POTS) VFG, and can be either incoming or outgoing.
VFGENG	Virtual Facility Group Engineering. This table contains the size information for each VFG. Tuples are added to or deleted from this table through table VIRTGRPS. Only operating company end users are allowed access to table VIRTGRPS. Table VFGENG must be set to READ ONLY or CHANGE ONLY in table CUSTPROT (Customer Protection).
Note: This table is datafilled through SERVORD; therefore, no datafill procedure is provided. Refer to “SERVORD" for an example of using SERVORD to datafill this table.	

Datafilling table OWNER

Table OWNER defines an owner ID and specifies whether other owner IDs are allowed to view their office data. An owner ID can be associated with more than one customer group.

The telephone operating company defines in Table OWNER the owner ID of a subset of data in the switch. The owner is allowed to view or modify only the subset of data assigned to him or her.

The following table shows the datafill specific to Customer Administration of Data for table OWNER. Only those fields that apply directly to Customer

Administration of Data are shown. For a description of the other fields, refer to the data schema section of this document.

Datafilling table OWNER

Field	Subfield or refinement	Entry	Explanation and action
OWNER		1-8 character name	Owner. This field specifies the name of the owner assigned to the office data. Enter the 1- to 8-character name assigned to the owner.
PUBLIC		Y or N	Public. This field specifies whether other owners are allowed to view office data owned by this owner. Enter Y or N.

Datafill example for table OWNER

The following example shows sample datafill for Table OWNER with owner CARLING and with field PUBLIC set to N to indicate other owners cannot view office data assigned to owner CARLING.

MAP display example for table OWNER

```
OWNER                                                    PUBLIC
_____________________________________________________________________

CARLING                                                     N
```

Datafilling table CDCLENS

Table CDCLENS (Customer Data Change Line) contains the LENs that are associated with each owner ID. The LENs identified in this table can only be assigned in Table IBNLINES or Table KSETINV. Any LEN that is added to either of these tables with option CDC is automatically added to Table CDCLENS. The ownership information is used to restrict the LENs that can be queried or modified by CDC end users. Option CDC can only be deleted from a line by deleting the entry in Table CDCLENS.

The following table shows the datafill specific to Customer Administration of Data for table CDCLENS. Only those fields that apply directly to Customer

Customer Administration of Data (continued)

Administration of Data are shown. For a description of the other fields, refer to the data schema section of this document.

Datafilling table CDCLENS

Field	Subfield or refinement	Entry	Explanation and action
LEN		cthe LEN	Line Equipment Number. This field specifies the LEN owned by the customer group. Enter the LEN.
OWNER		1-8 character name	Owner. This field specifies the name of the owner. This name can be found in field OWNER of Table OWNER. Enter the 1- to 8-character name assigned to the owner.

Datafill example for table CDCLENS

The following example shows sample datafill for table CDCLENS.

MAP display example for table CDCLENS

```
LEN                                                OWNER
_____________________________________________________________

HOST 00 1 18 08                                  CARLING
```

Datafilling table CDCLOGON

Table CDCLOGON (Customer Data Change Logon) associates the logon user name, an owner ID, a user class, and POF privileges for the CDC end user. This table is used by SERVORD to determine if an end user is a CDC end user. Failure to enter the user name in Table CDCLOGON allows the end user access to all office data accessible by SERVORD.

The following table shows the datafill specific to Customer Administration of Data for table CDCLOGON. Only those fields that apply directly to Customer

Administration of Data are shown. For a description of the other fields, refer to the data schema section of this document.

Datafilling table CDCLOGON

Field	Subfield or refinement	Entry	Explanation and action
USERNAME		logon user name	User Name. This field specifies the logon user name assigned to the customer group. Enter the logon user name.
OWNER		1-8 character name	Owner. This field specifies the name of the owner. This name can be found in field OWNER of Table OWNER. Enter the 1- to 8-character name assigned to the owner.
CLASS		GENERAL, NONUSER, OBSERVER, or TELCO	Class. This field specifies the class assigned to the owner. Enter GENERAL, NONUSER, OBSERVER, or TELCO.
POF		Y or N	Pending Order File. This field specifies whether the CDC end user is allowed a POF. Enter Y or N.

Datafill example for table CDCLOGON

The following example shows sample datafill for table CDCLOGON.

MAP display example for table CDCLOGON

```
USERNAME   OWNER    CLASS    POF
_____________________________________________________________

PRATER    CARLING   GENERAL   Y
```

Datafilling table CDCDNS

Table CDCDNS (Customer Data Change DN) contains the DNs associated with a customer group. This table shows the owner ID associated with a range of DNS. One entry is required in this table for each single DN, or block of DNs, associated with each owner.

The following table shows the datafill specific to Customer Administration of Data for table CDCDNS. Only those fields that apply directly to Customer

Customer Administration of Data (continued)

Administration of Data are shown. For a description of the other fields, refer to the data schema section of this document.

Datafilling table CDCDNS

Field	Subfield or refinement	Entry	Explanation and action
OWNER		character 1-8 name	Owner. This field specifies the name assigned to the owner. This name can be found in field OWNER of Table OWNER. Enter the 1- to 8-character name assigned to the owner.

Datafill example for table CDCDNS

The following example shows sample datafill for table CDCDNS.

MAP display example for table CDCDNS

```
SNPA  NXX     FROMDIGS  TODIGS                    OWNER
_____________________________________________________
919 722 7000  5432      5439                    CARLING
```

Datafilling table CDCOPTS

Table CDCOPTS (Customer Data Change Line Option) contains a list of line options assigned to a customer group that the telephone operating company has purchased. These options are the only options that the CDC end user is allowed to access through SERVORD.

Note: If a customer group has no entry in this table, the CDC end users who own a line assigned to that customer group cannot add any options to that line.

The following table shows the datafill specific to Customer Administration of Data for table CDCOPTS. Only those fields that apply directly to Customer

Administration of Data are shown. For a description of the other fields, refer to the data schema section of this document.

Datafilling table CDCOPTS

Field	Subfield or refinement	Entry	Explanation and action
CUSTGRP		character 1-16 name	Customer Group. This field specifies the name of the customer group. Enter a 1- to 16-character name.
OPTIONS		CDC	Option List. This field specifies the list of line options assigned to the customer group. Enter CDC.

Datafill example for table CDCOPTS

The following example shows sample datafill for table CDCOPTS.

MAP display example for table CDCOPTS

```
CUSTGRP                                          OPTIONS
_____________________________________________________________

NBR                                                 CDC  $
```

Datafilling table DATAOWNR

Table DATAOWNR (Data Owner) contains the owner ID associated with various office data. This table is used by SERVORD to determine if an owner ID is allowed to view or modify various office data.

Note: Failure to enter any data in Table DATAOWNR prevents the CDC end user from accessing any office data other than that in Tables CDCLENS and CDCDNS.

The following table shows the datafill specific to Customer Administration of Data for table DATAOWNR. Only those fields that apply directly to Customer

Customer Administration of Data (continued)

Administration of Data are shown. For a description of the other fields, refer to the data schema section of this document.

Datafilling table DATAOWNR

Field	Subfield or refinement	Entry	Explanation and action
KEY		see subfields	Key. This field consists of subfields TABNAME and AUTHPART.
	TABNAME	AUTHPART	Table Name. This subfield specifies the table name. Enter AUTHPART.
	AUTHPART	character 1-16 name	Authorization Partition. This subfield specifies the name assigned to the authcode partition. Enter a 1- to 16-character name.
OWNER		character 1-8 name	Owner. This field specifies the name assigned to the owner. This name can be found in field OWNER of Table OWNER. Enter the 1- to 8-character name assigned to the owner.

Datafill example for table DATAOWNR

The following example shows sample datafill for table DATAOWNR.

MAP display example for table DATAOWNR

```
KEY                                                    OWNER
_______________________________________________________________

AUTHPART   NBR                                        CARLING
```

Datafilling table VFGDATA

Table VFGDATA (Virtual Facility Group Data) contains the data for one end of a VFG. Each end of a VFG can be an IBN VFG or a plain old telephone service (POTS) VFG, and can be either incoming or outgoing.

The following table shows the datafill specific to Customer Administration of Data for table VFGDATA. Only those fields that apply directly to Customer

Administration of Data are shown. For a description of the other fields, refer to the data schema section of this document.

Datafilling table VFGDATA

Field	Subfield or refinement	Entry	Explanation and action
KEY		see subfields	Key. This field consists of subfields VFGNAME and TYPEDIR.
	VFGNAME	alphanumeric	Virtual Facility Group Name. This subfield contains the name assigned to the VFG in Table VIRTGRPS. Enter an alphanumeric name.
	TYPEDIR	IBNVI, IBNVO, or POTSVI	Type and Direction. This subfield contains the type and direction for the IBN. Any entry outside of the range indicated for this field is invalid. Enter IBNVI, IBNVO, or POTSVI.
DATA		see subfield	Data. This field consists of subfield TYPEDIR.
	TYPEDIR	IBNVI, IBNVO, or POTSVI	Type and Direction. This subfield contains the type and direction for the IBN. Any entry outside of the range indicated for this field is invalid. Enter IBNVI, IBNVO, or POTSVI.

Datafill example for table VFGDATA

The following example shows sample datafill for table VFGDATA.

MAP display example for table VFGDATA

```
KEY                                DATA
_____________________________________________________________

REGOWT POTSVI       POTSVI N 112 N (VFGEA REG444 Y) $
```

Datafilling table VFGENG

Table VFGENG (Virtual Facility Group Engineering) contains the size information for each VFG. Tuples are added to or deleted from this table through Table VIRTGRPS. Only operating company end users are allowed access to Table VIRTGRPS. Table VFGENG must be set to READ ONLY or CHANGE ONLY in Table CUSTPROT (Customer Protection).

Customer Administration of Data (continued)

The following table shows the datafill specific to Customer Administration of Data for table VFGENG. Only those fields that apply directly to Customer Administration of Data are shown. For a description of the other fields, refer to the data schema section of this document.

Datafilling table VFGENG

Field	Subfield or refinement	Entry	Explanation and action
KEY		see subfield	Key. This field consists of subfield VIRTGRP.
	VIRTGRP	up to 6 characters	Virtual Facility Group Name. This subfield specifies the name assigned in Table VIRTGRPS to the VFG. Enter a name of up to 6 characters.
DATA		see subfield	Data. This field consists of subfield VFGTYPE.
	VFGTYPE	SIZE or USES	Virtual Facility Group Type. This subfield specifies the VFG type. Enter SIZE or USES.
Note: If subfield VFGTYPE contains the entry SIZE, datafill subfield SIZE with a value from 0 to 2048.			

Datafill example for table VFGENG

The following example shows sample datafill for table VFGENG.

MAP display example for table VFGENG

```
KEY                                                    DATA
_______________________________________________________________

REGOWT       SIZE                                      2
```

Translation verification tools

Customer Administration of Data does not use translation verification tools.

SERVORD

SERVORD limitations and restrictions

Customer Administration of Data changes the Service Order System (SERVORD) commands that prompt for LTG for customer data change (CDC) end users. SERVORD no longer prompts CDC end users for LTG. This feature also prevents CDC end users from accessing OPRT, ANCT, and UNDM intercepts. CDC end users can still access BLDN, AINT, and CANN intercepts.

Customer Administration of Data (continued)

Option CDC is assigned using the Service Order System (SERVORD) command ADO (add option) The DEO (delete option) command is used to remove option CDC. Option CDC allows the end user to modify line informatin. Any line with optin CDC can be modified.

SERVORD prompts

The following table shows the SERVORD prompts used to assign Customer Administration of Data to an existing line.

SERVORD prompts for Customer Administration of Data

Prompt	Valid input	Explanation
DN_OR_LEN	7-digit DN or LEN	Specifies the 7-digit DN or LEN of the line to be changed. Enter the DN or LEN.
OPTKEY	1 to 69	Indicates the key on an MBS to which an option is assigned. Enter a value from 1 to 69.
OPTION	CDC	Indicates the name of the option. Enter CDC.

Note: Tables IBNLINES and KSETFEAT is automatically datafilled when Customer Administration of Data is assigned using SERVORD.

SERVORD example for implementing Customer Administration of Data

The following SERVORD example shows how Customer Administration of Data option CDC is assigned to an existing line using the ADO command.

SERVORD example for Customer Administration of Data in prompt mode

```
SO:
>ADO
SONUMBER:    NOW 87 10 10 PM
>
DN_OR_LEN:
>6213000
OPTKEY:
>2
OPTION:
>CDC
CDC_OWNER:
>CIVIC
OPTKEY:
>$
```

Customer Administration of Data (continued)

SERVORD example for Customer Administration of Data in no-prompt mode

```
> ADO  $  6213000  2  CDC  CIVIC  $
```

Log reports

Log report CDC101 is generated if CDC command logging is enabled. When a CDC end user executes a SERVORD command, a report is automatically generated that records all CDC SERVORD commands. As a result, the telephone operating company can monitor the SERVORD commands that are entered by the CDC end user. The log report contains the entire command string as entered by the CDC end user. The log report command string can include a maximum of 300 characters and is generated by SERVORD at the completion of each command if the CUSTOMER_DATA_CHANGE_LOGS office parameter is set to Y.

CUSTOMER_DATA_CHANGE_LOGS, an office parameter in Table OFCVAR, controls whether the CDC101 log report is generated. To activate command logging, the operating company must set this office parameter to Y. The log system has limited storage capability. Therefore, only the most recent log reports are accessible through the output reporting system (LOGUTIL).

All SERVORD commands entered by CDC end users are documented by log report CDC101, which provides the following information:

- the owner with which the end user is associated
- the user name by which the end user logged on
- the text of the commands entered

CDC log reports can be sent to a log printer through the DMS-100 log system. The following steps must be taken to ensure that CDC commands are logged on a dedicated output device:

- Datafill Table LOGCLASS (Log Class) to link the CDC log reports to a unique log class.
- Datafill Table LOGDEV (Log Device) to link an output device to the class given in Table LOGCLASS.

An example of a CDC101 log report follows. This log report is generated by the SERVORD command ADO. It shows the owner with which the CDC end user is associated and the user name with which the CDC end user logged on.

An example of a CDC101 log report follows.

Customer Administration of Data (end)

```
CDC101  JUL15  18:54:39  5601  INFO CUSTOMER_DATA_CHANGE_COMMAND
   OWNER:       CARLING
   USER NAME:   PRATER
   COMMAND:     "ADO NOW 92 7 13 PM 7224111 (CXR CTALL) $"
```

Log report CDC102 is generated if CDC command logging is enabled and a CDC end user executes a PTE command. The report is only generated when adding, changing or deleting a tuple from a table.

The CDC102 log report provides the following information:

- the owner with which the end user is associated
- the user name by which the end user logged on
- the table the end user is accessing
- the name of the command
- the old data
- the new data

Log report CDC102 is generated after the PTE has completed processing of the command. If the command fails in the PTE, or if the end user aborts the command (by typing "N" to reject it), no report is generated.

An example of a CDC102 log report follows.

```
CDC102  APR01  12:00:00  2112  INFO CUSTOMER_DATA_CHANGE_COMMAND
   OWNER:       FRED
   USER NAME:   CIVIC
   TABLE:         TABLE:  IBNXLA
   COMMAND:       CHA
   OLD:  "FREDXLA  176  FEAT  N  N  CPU"
   NEW:  "FREDXLA  176  FEAT  N  N  RAG"
```

Customer Dialed Account Recording (CDAR)

Ordering codes

Functional group ordering code: MDC00009

Functionality ordering code: not applicable

Release applicability

BCS21 and up

Prerequisites

All the datafill information for this functionality is included in this document. However, prerequisite software and hardware is required for complete implementation.

Description

Customer Dialed Account Recording (CDAR) allows an account code to be entered into a Bellcore format Automatic Message Accounting (AMA) billing record. CDAR does not force an AMA record to be produced unless the call produces a billing record under normal circumstances.

Account codes are dialed by users, and identify individuals or groups for billing. For example, an account code is used to identify call activity for a specific department or client. The account code appears in the last field of the AMA record, within the CDAR number.

The CDAR number typically has the format 2XXXX or 3XXXX:

- 2XXXX is the standard format
- 3XXXX indicates that the AMA record for the call includes a trunk network number (TNN), in addition to the CDAR number.

Refer to the “MDC Variable CDAR" functionality description in *European DMS-100 Translations Guide, Volume 9*, 297-8041-3509, for information on how to enter variable-length account codes.

MDC Variable CDAR is controlled by software optionality control (SOC), so it cannot be activated until tariff conditions are met. Refer to the “Account Codes" functionality description in *European DMS-100 Translations Guide Volume 9*, 297-8041-3509, for additional information.

Customer Dialed Account Recording (CDAR) (continued)

Operation

A subscriber can access CDAR in one of the following three ways:

- Voluntary. The calling party dials the feature access code assigned to CDAR and waits for Special Dial Tone (SDT). On receiving SDT, the calling party dials the account code. Secondary dialtone is returned and the calling party dials the called party's Directory Number (DN) as normal. A Station Message Detail Recording (SMDR) record is generated.
- Compulsory. The calling party dials the called party's DN and waits for SDT. The SDT takes the form of a tone at 440 Hz and -13 dBm, followed by silence. On receiving SDT, the calling party dials the account code. The DMS switch then connects the call.

  The switch determines that an account code is required and that SDT must be generated, based on the caller's NCOS, or a dialed authorization code, or the data associated with the call.
- Flash. While active on a call, the calling party flashes, waits for SDT, and dials the feature access code assigned to CDAR. On receiving SDT for the second time, the calling party dials the account code and then flashes back to the call in progress. An SMDR record is generated. A second call can be made (on the second leg), which also generates an SMDR record.

Translations table flow

The CDAR translations tables are described in the following list:

- Table XLANAME (Translator Names) stores the default data, including the allowable digilator range, for each translator.
- Table CUSTHEAD (Customer Group Head) lists the names assigned to the blocks of data in table IBNXLA that store the data for the translation of digits. The account code capability (ACCT) option must be assigned.
- Table IBNXLA (IBN Translation) stores data for the digit translation of calls from an IBN station, attendant console, incoming IBN trunk group, or incoming side of a two-way IBN trunk group. The option ACCT must be datafilled.
- Table AMAOPTS (Automatic Message Accounting Options) is used to control the activation and scheduling of the recording options for AMA. The default values of these options are dependent on the entry in field FORMAT of table CRSFMT (Call Record Stream Format) where the entry in field KEY is AMA, which is datafilled automatically. Field AMASEL of table AMAOPTS should be set to ON to activate CDAR.

The CDAR translation process is shown in the flowchart that follows.

Customer Dialed Account Recording (CDAR) (continued)

Table flow for Customer Dialed Account Recording (CDAR)

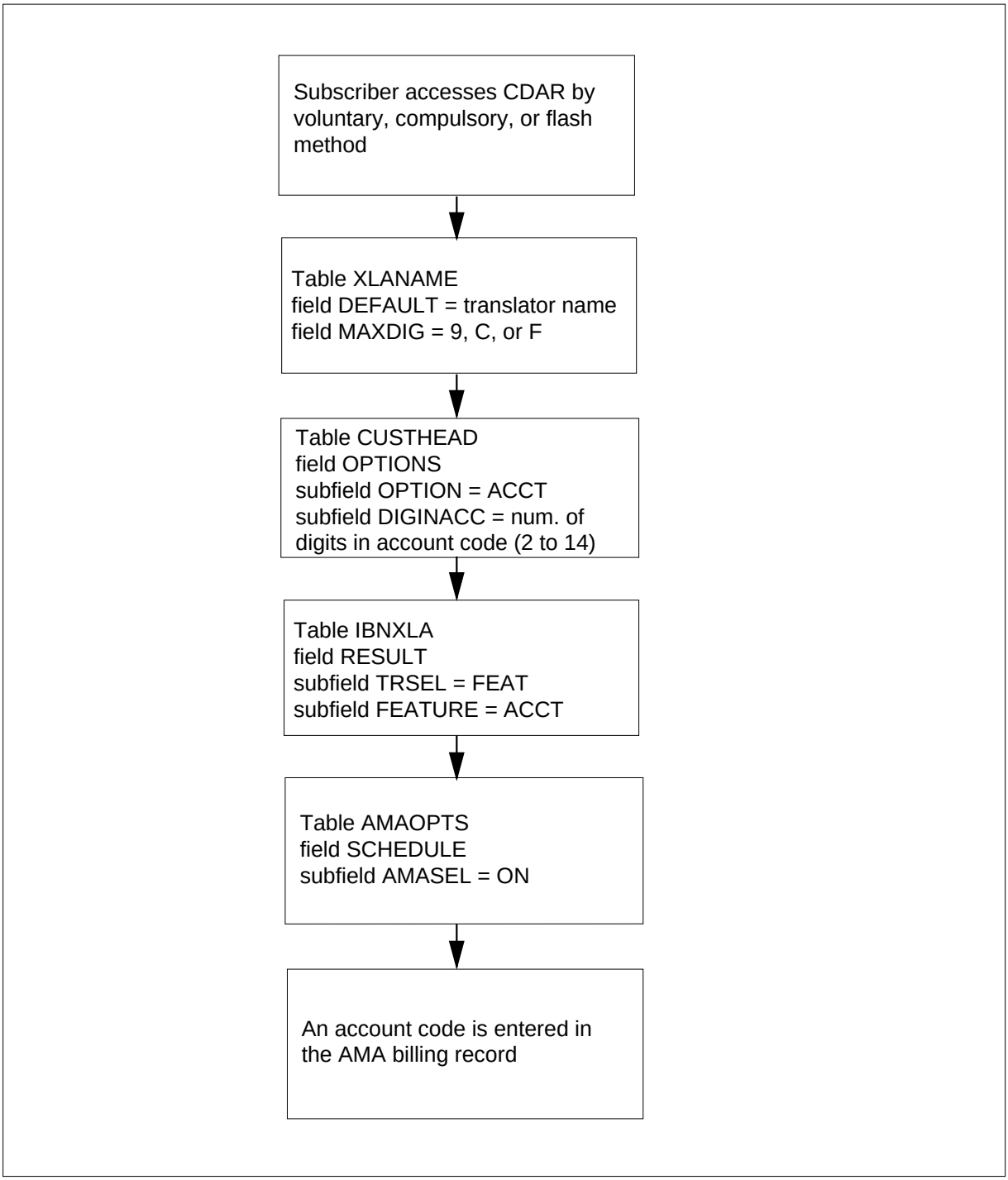

Customer Dialed Account Recording (CDAR) (continued)

The following table lists the datafill content used in the flowchart.

Datafill example for Customer Dialed Account Recording (CDAR)

Datafill table	Example data
XLANAME	DEFAULT MAXDIG BNRFEAT (9) $
CUSTHEAD	BNR BNRFEAT BNRDIG NIL (VACTRMT 0) (EXTNCOS 0) $ (ACCT 2 N N) $
IBNXLA	BNRFEAT 26 FEAT N Y N ACCT
AMAOPTS	CDAR ON

Limitations and restrictions

The following limitations and restrictions apply to Customer Dialed Account Recording (CDAR):

- The maximum number of account code digits that can be assigned is 14.
- All account code digits appear in the Station Message Detail Recording (SMDR) record.
- The default values of the AMA recording options set in table AMAOPTS are dependent on the entry in field FORMAT of table CRSFMT (Call Record Stream Format), where the entry in field KEY is AMA, which is datafilled automatically.

Interactions

Customer Dialed Account Recording (CDAR) has no functionality interactions.

Activation/deactivation by the end user

CDAR can be activated in three ways: voluntary, compulsory, and flash, as follows.

Activating voluntary CDAR

Subscriber off-hook

1 Dial the feature access code.

Response: The DMS-100 switch prompts with special dial tone (SDT).

2 Dial the account code.

Response: The DMS-100 switch prompts with secondary dial tone.

3 Dial the DN.

Response: The call is connected, and an SMDR record is generated.

Customer Dialed Account Recording (CDAR) (continued)

Activating compulsory CDAR

Subscriber 0ff-hook

1 Dial the DN.

Response: The DMS-100 switch prompts with SDT.

2 Dial the account code.

Response: The call is connected, and an SMDR record is generated.

Activating flash CDAR

Subscriber active on a call

1 Flash the switchhook.

Response: The DMS-100 switch prompts with SDT.

2 Dial the feature access code.

Response: The DMS-100 switch prompts with SDT.

3 Dial the account code.

4 Flash the switchhook again.

Response: The switch returns you to the call in progress, and generates an SMDR record. Alternatively, you can make a second call (on the second leg), and the switch generates an SMDR record for that call only.

Billing

CDAR does not affect billing.

Station Message Detail Recording

CDAR does not affect Station Message Detail Recording.

Datafilling office parameters

CDAR does not affect office parameters.

Customer Dialed Account Recording (CDAR) (continued)

Datafill sequence

The following table lists the tables that require datafill to implement Customer Dialed Account Recording (CDAR). The tables are listed in the order in which they are to be datafilled.

Datafill tables required for Customer Dialed Account Recording (CDAR)

Table	Purpose of table
XLANAME	Translator Names. This table stores the default data, including the allowable digilator range, for each translator.
CUSTHEAD	Customer Group Head. This table lists the names assigned to the blocks of data in table IBNXLA that store the data for the translation of digits. The account code capability (ACCT) option must be assigned.
IBNXLA	IBN Translation. This table stores data for the digit translation of calls from an IBN station, attendant console, incoming IBN trunk group, or incoming side of a two-way IBN trunk group. The option ACCT must be datafilled.
AMOPTS	AMA Options. This table is used to control the activation and scheduling of the recording options for AMA. Field AMASEL must be set to ON to activate CDAR.

Datafilling table XLANAME

The following table shows the datafill specific to CDAR for table XLANAME. Only those fields that apply directly to CDAR are shown. For a description of

Customer Dialed Account Recording (CDAR) (continued)

the other fields, refer to the description of table XLANAME in *European DMS-100 Translations Guide Volume 24*, 297-8041-350O.

Datafilling table XLANAME

Field	Subfield or refinement	Entry	Explanation and action
XLANAME		alphanumeric (1 to 8 characters)	Translator name. Enter the name that is assigned to the customer, feature, or preliminary translator.
DEFAULT		see subfield TRSEL in table IBNXLA	Default data. This field is a vector that consists of translation selector subfield TRSEL and the refinements dependent on this selector. It is identical to field RESULT in table IBNXLA. See the description of table IBNXLA in document 297-8041-350J for a full description of field RESULT and its refinements. ***Note:*** Due to the large number of TRSEL selector values and corresponding refinements, the RESULT refinement descriptions are not reproduced here.
CONTMARK		+ or $	Continuation mark. Enter + if additional information for this tuple is contained in the next record. Otherwise, enter $ to indicate the end of the tuple.
MAXDIG		9, C, or F	Maximum digit range. This field indicates the range of allowable values for the digilator portion of the specified translator's table IBNXLA key. Enter 9 to specify the range 0 to 9. This value is used for North America. Enter C to specify the range 0 to 9, A, B, and C. This value is used for Australia. Enter F to specify the range 0 to 9, A, B, C, D, E, and F. This value is used for Australia. Entries other than 9, C, or F are not valid. After field MAXDIG is datafilled for a particular tuple, the MAXDIG value can be changed only by deleting the entire tuple and reentering a new MAXDIG value. The default MAXDIG value is 9.

Datafill example for table XLANAME

The following example shows sample datafill for table XLANAME.

MAP display example for table XLANAME

```
XLANAME
DEFAULT
MAXDIG
-------------------------------------------------------
BNRFEAT                                    ( 9) $
```

Datafilling table CUSTHEAD

The following table shows the datafill specific to CDAR for table CUSTHEAD. Only those fields that apply directly to CDAR are shown. For a description of the other fields, refer to the *European DMS-100 Translations Guide Volume 18*, 297-8041-350I the data schema section of this document.

Datafilling table CUSTHEAD (Sheet 1 of 2)

Field	Subfield or refinement	Entry	Explanation and action
CUSTNAME		alphanumeric (1 to 16 characters)	Customer group name. Enter the name that is assigned to the customer group.
CUSTXLA		alphanumeric (1 to 8 characters)	Customer translator. Enter the name assigned to the block of data (customer translator) defined in table IBNXLA that specifies the data for the translation of digits originating from an IBN station, attendant console, incoming IBN trunk group, or incoming side of a two-way IBN trunk group. The translator name is defined in table XLANAME.
OPTIONS		see subfield	Options. This field consists of subfield OPTION.
	OPTION	ACCT	Option. Enter ACCT, and datafill the refinements DIGINACC and NOTIMOUT.

Customer Dialed Account Recording (CDAR) (continued)

Datafilling table CUSTHEAD (Sheet 2 of 2)

Field	Subfield or refinement	Entry	Explanation and action
	DIGINACC	2 to 14	Digits in account code. Enter the number of digits in the account code. ***Note:*** Field DIGINACC in table VARACCT, if datafilled, takes precedence over this entry.
	NOTIMOUT	Y or N	Time-out. Enter Y (yes) if no octothorpe (#) entry, or interdigit timer time-out is required for routing to begin, following the entry of an account code. If N (no) is entered, the call does not route until either an interdigit timer times-out, or an octothorpe (#) is entered.
	ACCTVAL	Y or N	Account code validation. The only valid entry for the DMS-100 switch is N.

Datafill example for table CUSTHEAD

The following example shows sample datafill for table CUSTHEAD.

MAP display example for table CUSTHEAD

```
CUSTNAME  CUSTXLA  DGCOLNM IDIGCOL
                                                        OPTIONS
_____________________________________________________________________

BNR       BNRFEAT   BNRDIG     NIL
                                 ( VACTRMT  0) ( EXTNCOS   0)$
                                  (ACCT   2   N  N)$
```

Datafilling table IBNXLA

The following table shows the datafill specific to CDAR for table IBNXLA. Only those fields that apply directly to CDAR are shown. For a description of the other fields, refer to *European DMS-100 Translations Guide Volume 19*, 297-8041-350J.

Datafilling table IBNXLA

Field	Subfield or refinement	Entry	Explanation and action
KEY		see subfields	Key. This field consists of subfields XLANAME and DGLIDX.
	XLANAME	1- 8 character name	Translator name. This subfield specifies the name that is assigned to the translator. Enter the 1- to 8-character name.
	DGLIDX	1-18 numeric	Digilator index. This subfield specifies the access code. Enter the 1- to 18-digit number assigned as the access code.
RESULT		see subfield	Result. This field consists of subfield TRSEL.
	TRSEL	FEAT	Translations selector. This subfield specifies the translations selector to be used. Enter FEAT. If TRSEL is set to FEAT, subfields ACR, SMDR, VCDR, and FEATURE require datafill.
	ACR	Y or N	Account code entry. This subfield specifies whether an account code is required. Enter Y or N.
	SMDR	Y or N	Station Message Detail Recording. This subfield specifies whether SMDR is required. Enter Y or N.
	VCDR	Y or N	Variable call detail recording. This subfield specifies whether VCDR is required. Enter Y or N.
	FEATURE	ACCT	Feature. This subfield specifies the feature assigned to a line. Enter ACCT.

Datafill example for table IBNXLA

The following example shows sample datafill for table IBNXLA.

Customer Dialed Account Recording (CDAR) (continued)

MAP display example for table IBNXLA

```
KEY                                    RESULT
_____________________________________________________________

BNRFEAT      26                      FEAT N Y N ACCT
```

Datafilling table AMAOPTS

The following table shows the datafill specific to CDAR for table AMAOPTS. Only those fields that apply directly to CDAR are shown. For a description of the other fields, refer to *European DMS-100 Translations Guide Volume 16*, 297-8041-350G.

Datafilling table AMAOPTS

Field	Subfield or refinement	Entry	Explanation and action
OPTION		see refinement	Option. This field consists of refinement AMAOPT.
	AMAOPT	alphanumeric	AMA option. This refinement defines the options. CDAR controls the recording of customer-dialed account codes. Enter CDAR.
SCHEDULE		see refinement	Schedule. This field consists of refinement AMASEL.
	AMASEL	ON, OFF, DEFAULT, PERIODIC, TIMED	AMA selector. This refinement determines how the option is activated. Enter ON to activate the option immediately.

Datafill example for table AMAOPTS

The following example shows sample datafill for table AMAOPTS.

Customer Dialed Account Recording (CDAR) (end)

MAP display example for table AMAOPTS

```
OPTION          SCHEDULE
-------------------------------------------------------
CDAR              ON
```

Translation verification tools

CDAR does not use translation verification tools.

SERVORD

CDAR does not use SERVORD.

Customer Network Data Changes

Ordering codes

Functional group ordering code: MDC00009

Functionality ordering code: not applicable

Release applicability

BCS18 and up

Prerequisites

To operate, Customer Network Data Changes has the following prerequisites:

- BAS Generic, BAS00003
- MDC PRO, MDC00009

Description

Customer Network Data Changes is an enhancement based on the Customer Service Change (CSC) feature. CSC is available only on Meridian business sets (MBS). Customer Network Data Changes allows the end user to change line options, features, and directory number (DN) assignments on MBSs, 500/2500 sets, and Datapath data units. The end user's access to data for any of these line types can be denied or restricted by the telephone operating company.

Customer Network Data Changes provides telephone operating companies with the means to allow their end users to view and modify certain translation and routing parameters from their own premises through the Service Order System (SERVORD). The end user can manipulate the following office data:

- network class of service (NCOS), line screening code (LSC), and alternate line screening code (ALSC) assigned to MDC trunks and virtual facility groups (VFG)
- NCOS, LSC, ALSC, terminating restriction code (TRC), and alternate terminating restriction code (ATRC) assigned to lines
- current time-of-day (TOD) system result for TOD routing
- NCOS assigned to authorization codes
- authorization codes (the end user can add, delete, and change authorization codes, and can query a range of authorization codes)

Operation

An end user is considered to be a Customer Data Change (CDC) end user if the user name entered at logon time appears in Table CDCLOGON (Customer

Customer Network Data Changes (continued)

Data Change Logon). Table CDCLOGON associates the logon user name, an owner ID, a user class, and pending order file (POF) privileges for the end user.

To implement Customer Network Data Changes, the telephone operating company defines, through a number of data tables, the office data that end users are allowed to view, query, or modify, and the method by which they are permitted to access the office data.

Data ownership

A primary concern to the telephone operating company implementing Customer Network Data Changes is that the end user is not allowed to view or modify another end user's data. To address this concern, Customer Network Data Changes includes two methods to specify and partition data ownership.

Data ownership allows the telephone operating company to define a large business or service as the owner of the office data for more than one customer group. This data owner does not have to be an MDC end user in order to own data for its customer group. End users can modify only the subset of data in a DMS switch to which the telephone operating company gives them access through datafill of ownership tables.

Command security

When a CDC end user logs on to SERVORD, he or she is prevented from executing certain commands that can disrupt system operation. Two methods are available to the telephone operating company to prevent the end user from executing certain commands: command screening and the CDCSETUP command:

- Command screening: Command screening prevents unauthorized use of command interpreter (CI) commands and relies on correct datafill of the command screening system. This method creates a command class and assigns to this command class the appropriate commands. The end user names used by CDC end users are assigned this command class alone. Commands available to CDC end users are assigned in Table CMDS (Command Screening). This table associates command classes with command names. It is this association that prevents CDC end users from using commands that can disrupt system operation.
- CDCSETUP command: A second method using command screening is for the telephone operating company to enter a CI command, CDCSETUP, into the end user's logon and restart profile files. When a CDC end user logs in, the CI command allows the telephone operating company to create a special CDC directory, add only the commands that the CDC end user is permitted to access, detach all other end user directories, and leave the CDC end user effectively isolated from the rest of the CI system.

Customer Network Data Changes (continued)

Reservation of line equipment numbers

Customer Network Data Changes uses Table CDCLENS (Customer Data Change Line), which allows an operating company to reserve LENs for use in Table IBNLINES (IBN Line Assignment).

Each tuple in Table CDCLENS contains a LEN and a customer group name. The customer group designated in each tuple is the owner of the LEN. Other customer groups are not allowed to datafill a LEN in Table IBNLINES that belongs to any other customer group.

A LEN can be added to Table CDCLENS if one of the following scenarios is present:

- The line is assigned in Table IBNLINES, and the customer group specified in Table IBNLINES is the owner of the added LEN in Table CDCLENS.
- The line appears in Table LNINV (Line Circuit Inventory) but does not appear in any other line table.
- The line appears in Table KSETINV (Business Set and Data Unit Inventory).
- Option CDC is added to the LEN in Tables IBNLINES and KSETINV.

User interface

Command screening prevents unauthorized use of CI commands and creates a command class and assigns to this command class the appropriate commands. The following CI commands are made available to the CDC end user with command screening.

DATE	show the current switch date
TIME	show the current switch time
LOGOUT	log the end user out of the DMS switch
PASSWORD	change the password
SERVORD	enter SERVORD
LEAVE	leave from a CI prompt
DEFAULT	set certain CDC parameters
RESET	reset certain CDC parameters
HELP	get help on SERVORD

QDN	query information about the hardware and software associated with a DN
QLEN	query information related to a specific LEN

To find out the current switch time, the CDC end user enters the following command:

```
>TIME
```

To query DN 722-4111, the CDC end user enters the following command:

```
>QDN 722 4111
```

To query LEN 02 0 0 1, the CDC end user enters the following command:

```
>QLEN 02 0 0 1
```

Translations table flow

The Customer Network Data Changes translations process is shown in the flowchart in the following figure. The flowchart and data show the translation flow to assign Customer Network Data Changes to an MBS, 500/2500 set, or Datapath data unit.

The Customer Network Data Changes translations tables are described in the following list:

- Table OWNER (Owner) defines an owner ID and specifies whether other owner IDs are allowed to view their office data. An owner ID can be associated with more than one customer group.
- Table DATAOWNR (Data Owner) contains the owner ID associated with various office data. This table is used by SERVORD to determine if an owner ID is allowed to view or modify various office data.
- Table KSETINV (Business Set and Data Unit Inventory) contains the station options assigned to each customer group. Option CDC allows the CDC end user to modify office data information.
- Table CDCDNS (Customer Data Change DN) contains the DNs associated with a customer group. This table shows the owner ID associated with a range of DNs.
- Table CDCOPTS (Customer Data Change Line Option) contains a list of line options that the telephone operating company has purchased. These options are the only options a CDC end user is allowed to access through SERVORD.

Customer Network Data Changes (continued)

- Table CDCLENS (Customer Data Change Line) stores ownership information for LENs. Table CDCLENS associates IBN customer groups with LENs in order to establish ownership of LENs. The ownership information is used to restrict the LENs that can be queried or modified by CDC end users.
- Table CDCLOGON (Customer Data Change Logon) associates the logon user name, an owner ID, a user class, and POF privileges for the CDC end user. This table is used by SERVORD to determine if an end user is a CDC end user. Failure to enter the user name in Table CDCLOGON allows the end user access to all office data accessible by SERVORD.
- Table IBNLINES (IBN Line Assignment) contains the line assignment for all MDC single lines and attendant console stations. This table is modified so that LENs can be owned by IBN customer groups. This table enforces the ownership of LENs established by Table CDCLENS.

The Customer Network Data Changes translation process is shown in the flowchart that follows.

Table flow for Customer Network Data Changes

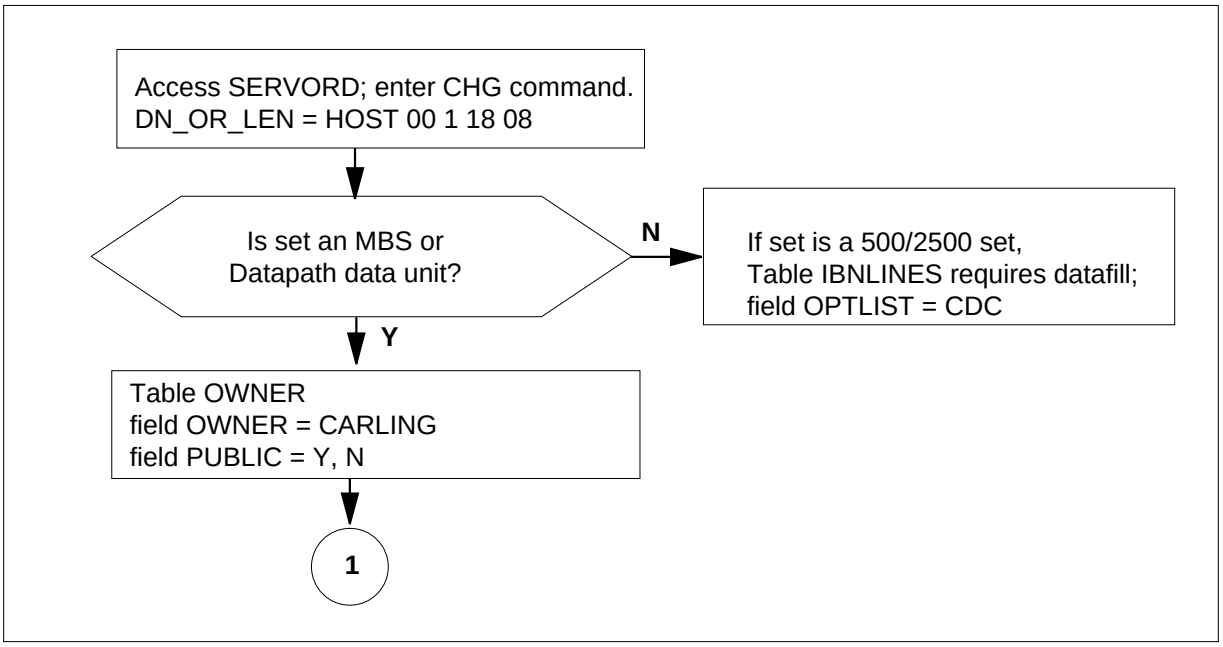

Customer Network Data Changes (continued)

Table flow for Customer Network Data Changes (continued)

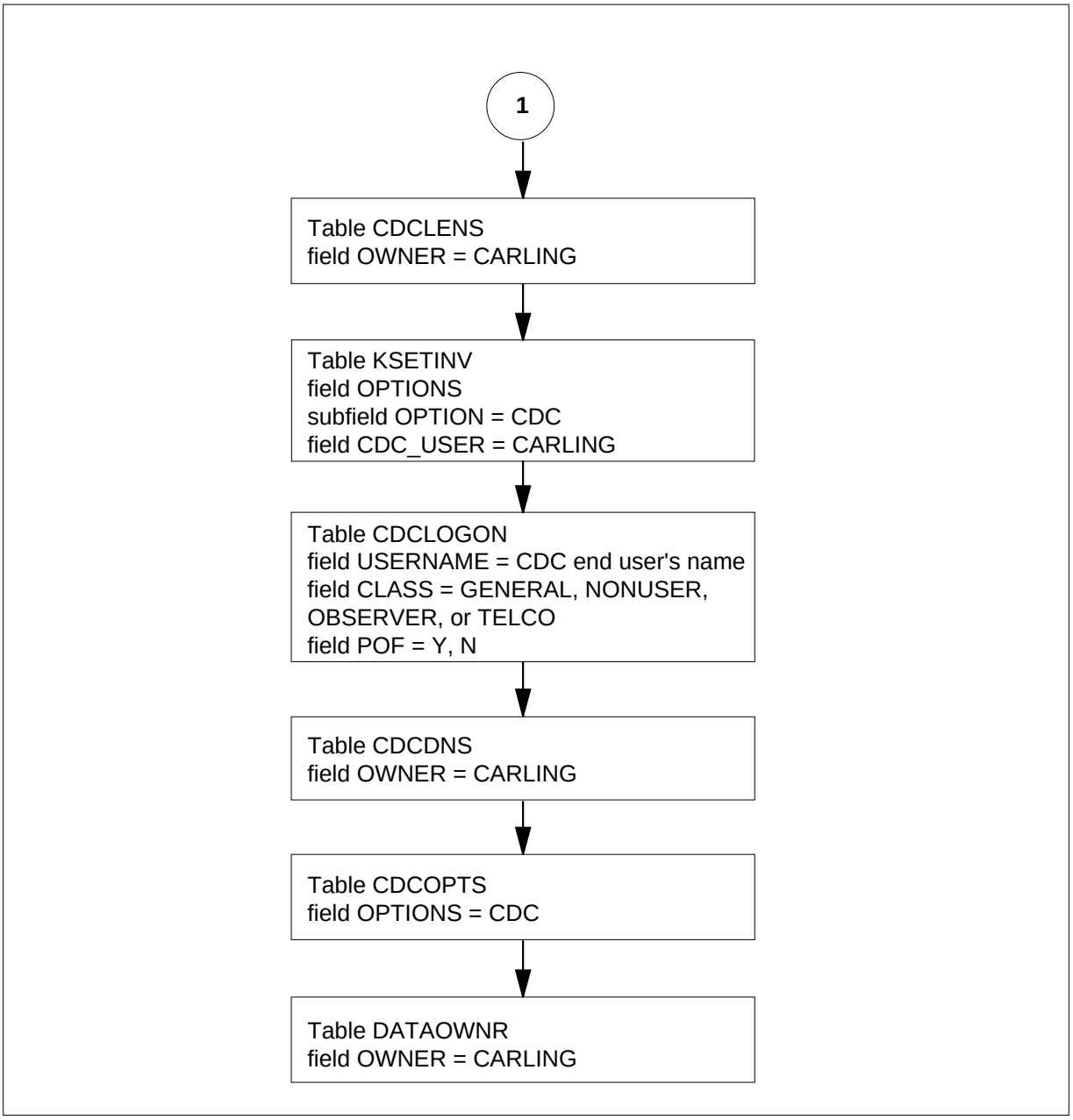

Customer Network Data Changes (continued)

The following table lists the datafill content used in the flowchart.

Datafill example for Customer Network Data Changes

Datafill table	Example data
OWNER	CARLING N
CDCLENS	HOST 00 1 18 08 CARLING
IBNLINES	HOST 00 1 18 08 0 DT STN IBN 7227000 100 CDC $
KSETINV	HOST 00 1 18 08 MDC Y N S1 E6 $ CDC CARLING
CDCLOGON	PRADER CARLING GENERAL Y
CDCDNS	919 722 7000 5432 5439 CARLING
CDCOPTS	NBR CDC $
DATAOWNR	AUTHPART NBR CARLING

Limitations and restrictions

Customer Network Data Changes has no limitations or restrictions.

The following limitations and restrictions apply to Customer Network Data Changes:

- The telephone operating company must define, through datafill, the DNs, LENs, and options that a CDC end user is allowed to query and modify.
- A LEN assigned in Table CDCLENS cannot be used in any other line table, except for Table IBNLINES and Table KSETINV.
- When a LEN appears in Table CDCLENS, it is reserved for IBN use only and cannot be used in any other line table. Conversely, when a LEN is deleted from Table CDCLENS, the LEN can be used in any other line table.
- When a LEN appears in both Table CDCLENS and Table IBNLINES, the customer group specified in the two tables must match.
- An owner must be specified when option CDC is added to a LEN in Table KSETINV.
- If there are no entries in Table CDCLENS for the owner, the end user cannot access any LENs or DNs in the office.
- There is one logon ID associated with each CDC end user.

Interactions

Customer Network Data Changes has no functionality interactions.

Activation/deactivation by the end user

Customer Network Data Changes requires no activation or deactivation by the end user.

Billing

Customer Network Data Changes does not affect billing.

Station Message Detail Recording

Customer Network Data Changes does not affect Station Message Detail Recording.

Datafilling office parameters

Datafill procedure for CUSTOMER_DATA_CHANGE_LOGS

The following table shows the office parameters used by Customer Network Data Changes. For more information about office parameters, refer to *Office Parameters Reference Manual.*

CUSTOMER_DATA_CHANGE_LOGS, an office parameter in Table OFCVAR (Variable Office), controls whether the DMS switch generates a CDC101 log report each time a CDC end user issues a SERVORD command. To activate command logging, the operating company must set the office parameter to Y.

The following procedure identifies the datafill for CUSTOMER_DATA_CHANGE_LOGS.

Datafill procedure for CUSTOMER_DATA_CHANGE_LOGS

Table name	Parameter name	Entry	Explanation and action
OFCVAR	CUSTOMER_DATA_CHANGE_LOGS	Y OR N	Indicates whether the DMS switch generates a CDC101 log report each time a CDC end user issues a SERVORD command. Enter Y or N. The default value is N.

Customer Network Data Changes (continued)

Datafill sequence

The following table lists the tables that require datafill to implement Customer Network Data Changes. The tables are listed in the order in which they are to be datafilled.

Datafill tables required for Customer Network Data Changes

Table	Purpose of table
OWNER	Owner Table. This table defines an owner ID and specifies whether other owner IDs are allowed to view their office data. An owner ID can be associated with more than one customer group.
CDCLENS	Customer Data Change Directory Number table. This table lists the directory numbers assigned to a customer group that has customer data change capability. One entry is required for each single DN or block of consecutive DNs that are assigned to the customer group.
IBNLINES (Note)	IBN Line Assignments table. This table contains the line assignments for data channel links for the Bulk Calling Line Identification (BCLI) feature under the format name of BL.
KSETINV (Note)	Business Set and Data-Unit Inventory table. This table lists the data for each business set and data unit.
CDCLOGON	Customer Data Change Logon table. This table lists the logon user name associated with an owner name
CDCDNS	Customer Data Change Directory Number table. This table lists the directory numbers assigned to a customer group that has customer data change capability. One entry is required for each single DN or block of consecutive DNs that are assigned to the customer group.
CDCOPTS	Customer Data Change Line Option table. This table lists the line options that are assigned to a customer group that has customer data change capability. If a customer group has no entry in this table, the CDC users who own a line assigned to that customer cannot add any options to the line.
DATAOWNR	Data Owner table. The customer data change (CDC) system enables the operating company to provide non-operating company users with the ability to view or change certain data on the switch. Each owner is identified by a unique owner name that corresponds to one or more CDC users.
Note: This table is datafilled through SERVORD; therefore, no datafill procedure or example is provided. Refer to “SERVORD" for an example of using SERVORD to datafill this table.	

Datafilling table OWNER

Table OWNER (Owner) defines an owner ID and specifies whether other owner IDs are allowed to view their office data. An owner ID can be associated with more than one customer group.

The telephone operating company defines in Table OWNER the owner ID of a subset of data in the switch. The owner is allowed to view or modify only the subset of data assigned to him or her.

The following table shows the datafill specific to Customer Network Data Changes for table OWNER. Only those fields that apply directly to Customer Network Data Changes are shown. For a description of the other fields, refer to the data schema section of this document.

Datafilling table OWNER

Field	Subfield or refinement	Entry	Explanation and action
OWNER		1-8 character name	Owner. This field specifies the name of the owner assigned to the office data. Enter the 1- to 8-character name assigned to the owner.
PUBLIC		Y or N	Public. This field specifies whether other owners are allowed to view office data owned by this owner. Enter Y or N.

Datafill example for table OWNER

The following example shows sample datafill for table OWNER.

MAP display example for table OWNER

```
OWNER                                                PUBLIC
_____________________________________________________________

CARLING                                                 N
```

Datafilling table CDCLENS

Table CDCLENS (Customer Data Change Line) contains the LENs that are associated with each owner ID. The LENs identified in this table can only be assigned in table IBNLINES or table KSETINV. Any LEN that is added to either of these tables with option CDC is automatically added to Table CDCLENS. The ownership information is used to restrict the LENs that can

Customer Network Data Changes (continued)

be queried or modified by CDC end users. Option CDC can only be deleted from a line by deleting the entry in Table CDCLENS.

The following table shows the datafill specific to Customer Network Data Changes for table CDCLENS. Only those fields that apply directly to Customer Network Data Changes are shown. For a description of the other fields, refer to the data schema section of this document.

Datafilling table CDCLENS

Field	Subfield or refinement	Entry	Explanation and action
LEN		the LEN	Line Equipment Number. This field specifies the LEN owned by the customer group. Enter the LEN.
OWNER		1-8 character name	Owner. This field specifies the name of the owner. This name can be found in field OWNER of Table OWNER. Enter the 1- to 8-character name assigned to the owner.

Datafill example for table CDCLENS

The following example shows sample datafill for table CDCLENS.

MAP display example for table CDCLENS

```
LEN                                                OWNER
_____________________________________________________________

HOST 00 1 18 08                                  CARLING
```

Datafilling table CDCLOGON

Table CDCLOGON (Customer Data Change Logon) associates the logon user name, an owner ID, a user class, and POF privileges for the CDC end user. This table is used by SERVORD to determine if an end user is a CDC end user. Failure to enter the user name in Table CDCLOGON allows the end user access to all office data accessible by SERVORD.

The following table shows the datafill specific to Customer Network Data Changes for table CDCLOGON. Only those fields that apply directly to

Customer Network Data Changes are shown. For a description of the other fields, refer to the data schema section of this document.

Datafilling table CDCLOGON

Field	Subfield or refinement	Entry	Explanation and action
USERNAME		logon user name	User Name. This field specifies the logon user name assigned to the customer group. Enter the logon user name.
OWNER		108 character name	Owner. This field specifies the name of the owner. This name can be found in field OWNER of Table OWNER. Enter the 1- to 8-character name assigned to the owner.
CLASS		GENERAL, NONUSER, OBSERVER, or TELCO	Class. This field specifies the class assigned to the owner. Enter GENERAL, NONUSER, OBSERVER, or TELCO.
POF		Y or N	Pending Order File. This field specifies whether the CDC end user is allowed a POF. Enter Y or N.

Datafill example for table CDCLOGON

The following example shows sample datafill for table CDCLOGON.

MAP display example for table CDCLOGON

```
USERNAME   OWNER    CLASS    POF
-------------------------------------------------------------
PRATER    CARLING  GENERAL   Y
```

Datafilling table CDCDNS

Table CDCDNS (Customer Data Change DN) contains the DNs associated with a customer group. This table shows the owner ID associated with a range of DNS. One entry is required in this table for each single DN, or block of DNs, associated with each owner.

The following table shows the datafill specific to Customer Network Data Changes for table CDCDNS. Only those fields that apply directly to Customer

Customer Network Data Changes (continued)

Network Data Changes are shown. For a description of the other fields, refer to the data schema section of this document.

Datafilling table CDCDNS

Field	Subfield or refinement	Entry	Explanation and action
OWNER		1-8 character name	Owner. This field specifies the name assigned to the owner. This name can be found in field OWNER of table OWNER. Enter the 1- to 8-character name assigned to the owner.

Datafill example for table CDCDNS

The following example shows sample datafill for table CDCDNS.

MAP display example for table CDCDNS

```
SNPA  NXX     FROMDIGS  TODIGS                    OWNER
_____________________________________________________
919 722 7000  5432      5439                    CARLING
```

Datafilling table CDCOPTS

Table CDCOPTS (Customer Data Change Line Option) contains a list of line options assigned to a customer group that the telephone operating company has purchased. These options are the only options that the CDC end user is allowed to access through SERVORD.

Note: If a customer group has no entry in this table, the CDC end users who own a line assigned to that customer group cannot add any options to that line.

The following table shows the datafill specific to Customer Network Data Changes for table CDCOPTS. Only those fields that apply directly to

Customer Network Data Changes are shown. For a description of the other fields, refer to the data schema section of this document.

Datafilling table CDCOPTS

Field	Subfield or refinement	Entry	Explanation and action
CUSTGRP		1-16 character name	Customer Group. This field specifies the name of the customer group. Enter a 1- to 16-character name.
OPTIONS		CDC	Option List. This field specifies the list of line options assigned to the customer group. Enter CDC.

Datafill example for table CDCOPTS

The following example shows sample datafill for table CDCOPTS.

MAP display example for table CDCOPTS

```
CUSTGRP                                          OPTIONS
_____________________________________________________________

NBR                                                 CDC  $
```

Datafilling table DATAOWNR

Table DATAOWNR (Data Owner) contains the owner ID associated with various office data. This table is used by SERVORD to determine if an owner ID is allowed to view or modify various office data.

Note: Failure to enter any data in table DATAOWNR prevents the CDC end user from accessing any office data other than that in Tables CDCLENS and CDCDNS.

The following table shows the datafill specific to Customer Network Data Changes for table DATAOWNER. Only those fields that apply directly to

Customer Network Data Changes (continued)

Customer Network Data Changes are shown. For a description of the other fields, refer to the data schema section of this document.

Datafilling table DATAOWNR

Field	Subfield or refinement	Entry	Explanation and action
KEY		see subfield	Key. This field consists of subfields TABNAME and AUTHPART.
	TABNAME	AUTHPART	Table Name. This subfield specifies the table name. Enter AUTHPART.
	AUTHPART	1-16 character name	Authorization Partition. This subfield specifies the name assigned to the authcode partition. Enter a 1- to 16-character name.
OWNER		1-8 character name	Owner. This field specifies the name assigned to the owner. This name can be found in field OWNER of Table OWNER. Enter the 1- to 8-character name assigned to the owner.

Datafill example for table DATAOWNR

The following example shows sample datafill for table DATAOWNR.

MAP display example for table DATAOWNR

```
KEY                                                    OWNER
_______________________________________________________________

AUTHPART   NBR                                        CARLING
```

Translation verification tools

Customer Network Data Changes does not use translation verification tools.

SERVORD

Customer Network Data Changes enables the CDC end user to query and modify information about DNs, line, trunks, routing and system parameters through SERVORD. All the existing SERVORD commands are enhanced to allow the CDC end user to enter LENs and DNs associated with MBSs, 500/2500 sets, and Datapath data units. SERVORD uses Tables DATAOWNR,

CDCDNS, and CDCLENS to determine whether a CDC end user is permitted to enter commands to query or modify office data.

Note: Tables IBNLINES and KSETINV are automatically datafilled when Customer Network Data Changes is assigned using SERVORD.

SERVORD limitations and restrictions

Customer Network Data Changes has no SERVORD limitations or restrictions.

SERVORD prompts

The following table shows the SERVORD prompts used to change an NCOS of a common language location identifier (CLLI) and an authorization code for an owner.

SERVORD prompts for Customer Network Data Changes (Sheet 1 of 2)

Prompt	Valid input	Explanation
DN_OR_LEN	7-digit DN or LEN	Specifies the 7-digit DN or LEN of the line to be changed. Enter the DN or LEN.
WHAT	CLLI, AUTH	Indicates the aspect of the line to be changed. Enter CLLI or AUTH.
AUTHPART	1- to 16-character alphanumeric name	Indicates the authorization partition name assigned to the customer group. Enter a 1- to 16-character alphanumeric name.
AUTHCODE	2 to 12 digits	Indicates the authorization code for the customer group. Enter 2 to 12 digits.
CLLI	1- to 8-character alphanumeric name	Indicates the CLLI for the trunk. Enter a 1- to 8-character alphanumeric name.
CDC_OWNER	1- to 8-character name	Indicates the owner ID for the CDC end user. Enter a 1- to 8-character name.
OPTKEY	1 to 69	Indicates the key on an MBS to which an option is assigned. Enter a value from 1 to 69.
OPTION	CDC	Indicates the name of the option. Enter CDC.

Customer Network Data Changes (continued)

SERVORD prompts for Customer Network Data Changes (Sheet 2 of 2)

Prompt	Valid input	Explanation
NCOS	0 to 511	Indicates the NCOS assigned to MDC trunks. Enter a value from 0 to 511.
NCOS_OR_TOBE	NCOS, TOBE	Specifies whether the NCOS or the authcode is to be changed. Enter NCOS or TOBE.
TRUNK_INFO	ALL, ALSC, CUST, LSC, NCOS, SUBGRP	Indicates the trunk information to be displayed or changed. Enter ALL, ALSC, CUST, LSC, NCOS, or SUBGRP.

SERVORD example for implementing Customer Network Data Changes

The following SERVORD example shows how Customer Network Data Changes is used to add option CDC using the ADO (add option) command.

SERVORD example for Customer Network Data Changes in prompt mode

```
SO:
>ADO
SONUMBER:     NOW  90  1  2 AM
>
DN_OR_LEN:
>7227000
OPTKEY:
>2

>CDC
CDC_OWNER:
>CARLING
OPTKEY:
>$
```

SERVORD example for Customer Network Data Changes in no-prompt mode

```
> ADO  $  7227000  2  CDC  CARLING  $
```

The following service order example shows how Customer Network Data Changes is used to change the authorization code of owner NBR from 12345 to 22222 using the CHG (change translation/routing information) command.

Customer Network Data Changes (continued)

SERVORD example for Changing the authorization code of an owner using SERVORD in prompt mode

```
SO:
>CHG
SONUMBER:     NOW  90  1  2 AM
>
WHAT:
>AUTH
AUTHPART:
>NBR
AUTHCODE:
>12345
NCOS_OR_TOBE:
>TOBE
AUTHCODE:
>22222
```

SERVORD example for Customer Network Data Changes in no-prompt mode

```
> CHG $ AUTH NBR 12345 TOBE 22222
```

The following service order example shows how Customer Network Data Changes is used to change the NCOS of a CLLI using the CHG command.

SERVORD example for Customer Network Data ChangesChanging the NCOS of a CLLI using SERVORD in prompt mode

```
SO:
>CHG
SONUMBER:     NOW  90  1  2 AM
>
WHAT:
>CLLI
TRUNK_INFO:
>RAL
NCOS_LSC_OR_ALS:
>NCOS
NCOS:
>47
```

Customer Network Data Changes (end)

SERVORD example for Customer Network Data ChangesChanging the NCOS of a CLLI in no-prompt mode

```
> CHG  $  CLLI  RAL  NCOS  47
```

Customer Screening at the Trunk Test Position

Ordering codes

Functional group ordering code: MDC00009

Functionality ordering code: not applicable

Release applicability

BCS18 and up

Prerequisites

To operate, Customer Screening at the Trunk Test Position has the following prerequisites:

- BAS Generic, BAS00003
- MDC PRO, MDC00009

Description

Customer Screening at the Trunk Test Position enables a telephone operating company to supply its centrex customers with trunk test positions (TTP), allowing those customers to maintain their own trunk facilities.

To do this, the telephone company must specify ownership of the individual trunks in such a way that the feature can recognize which trunks belong to each customer. The telephone company must also limit the customer's access to resources, allowing the customer to gain access only to resources owned by the customer, while preventing that customer from gaining access to resources belonging to other customers.

This feature also blanks out the top-level alarms of nontelephone company users' MAPs (maintenance and administration positions). The top-level alarms of telephone company users are not affected. The alarm level threshold is set for each trunk group in Table CLLIMTCE (Common Language Location Identifier Maintenance). Log reports TRK101, TRK102, and TRK103 give an alarm level change on a per trunk group basis.

Operation

This feature uses feature Customer Network Data Changes (BV1552) to specify the resources that each customer owns, and Enhanced Command Screening (BC0904) to screen the commands that each customer can use within a TTP.

Customer Screening at the Trunk Test Position (continued)

Ownership of resources

The Customer Network Data Changes feature allows the telephone operating company to associate each LOGON_ID with an OWNER, and to associate each OWNER with the data that define the resources that it owns, including trunk common language location identifiers (CLLI). An owner can define its data as PUBLIC, allowing the data to be seen by other owners.

The Customer Network Data Changes feature also allows the telephone operating company to assign a USER_CLASS to each LOGON_ID. The following USER_CLASSs can be assigned:

- TELCO—A LOGON_ID assigned this USER_CLASS can see and alter all data.
- GENERAL—A LOGON_ID assigned this USER_CLASS can see PUBLIC data but can alter only its own data.
- OBSERVER—A LOGON_ID assigned this USER_CLASS can see only the data that it owns.
- NON USER—A LOGON_ID assigned this USER_CLASS cannot see or alter any data.

Customer Screening at the Trunk Test Position does not fully support the Customer Network Data Changes feature. It does not support the user class OBSERVER; an OBSERVER is considered as a NON USER. It also does not recognize PUBLIC data; an owner cannot monitor another owner's data within the TTP, even if it is marked as PUBLIC.

Command screening

The Enhanced Command Screening feature allows the telephone operating company to screen commands by terminal and user. This screening is based on ownership, defined by the Customer Network Data Changes feature. The telephone operating company can therefore prevent a user from using a command that would access resources owned by another user.

TTP and trunk selection

To facilitate the screening of trunk selection by user, four TTP commands are altered by this feature: POST_, CKT_, STKSDR_, and CALLTRF.

With this feature, the POST_ command posts only the trunks that are owned by the customer issuing the command. It will not post trunks owned by another owner, even if the data is marked as PUBLIC. Because the other TTP commands can operate only on the trunks that are posted, the customer cannot access any trunk that it does not own.

Customer Screening at the Trunk Test Position (continued)

The CKT_ command connects the specified trunk to the trunk in the control position. With this feature, this command ensures that the specified trunk is owned by the user before it makes the connection.

The STKSDR_ command has an option that allows it to act on trunks other than the ones posted by the POST_ command. With this feature, the command now ensures that the trunk to be acted on is owned by the user issuing the command.

The CALLTRF command is valid only if the trunk in the posted position is a testline. Because testlines are shared resources, no customer can own one. With this feature, this command checks to ensure that the trunk in the linked position is owned by the user, then moves the linked circuit into the control position.

Because the customer is remotely situated, the headset and similar test trunks with copper appearances at the TTP are not supported. The following commands will therefore not operate successfully for the centrex customer:

- HSET
- JACK_
- MONPOST
- MONLINK
- MONTALK_
- CKTMON_
- CPOS_

Translations table flow

Customer Screening at the Trunk Test Position does not affect translations table flow.

Limitations and restrictions

Customer Screening at the Trunk Test Position has no limitations or restrictions.

Customer Screening at the Trunk Test Position (continued)

Interactions

The following paragraphs describe the interactions between Customer Screening at the Trunk Test Position and other functionalities.

- *Customer Network Data Changes (BV1552)* Customer Screening at the Trunk Test Position interacts with Customer Network Data Changes by using its resource ownership facility to specify ownership of resources.
- *Enhanced Command Screening (BC0904)* Customer Screening at the Trunk Test Position interacts with Enhanced Command Screening by using its command screening facility to protect the switch from unauthorized actions by the customer.

Activation/deactivation by the end user

Customer Screening at the Trunk Test Position requires no activation or deactivation by the end user.

User interface

The following TTP commands are affected by this feature:

- POST_
- CKT_
- STKSDR_
- CALLTRF

This feature does not alter the options or the parameters that can be used with the commands, however, a possible response has been added for the commands. If CLLI is entered as an option and the TTP does not own the CCLI, a new response, `TEST ACCESS DENIED`, is returned. In the case of CALLTRF, the command is also blocked.

Billing

Customer Screening at the Trunk Test Position does not affect billing.

Station Message Detail Recording

Customer Screening at the Trunk Test Position does not affect Station Message Detail Recording.

Datafilling office parameters

Customer Screening at the Trunk Test Position does not affect office parameters.

Datafill sequence

The following table lists the tables that require datafill to implement Customer Screening at the Trunk Test Position. The tables are listed in the order in which they are to be datafilled.

Datafill tables required for Customer Screening at the Trunk Test Position

Table	Purpose of table
CLLIMTCE	CLLI Maintenance Table. This table stores information for each trunk group common language location identifier, for each hardware tone group CLLI (that is, those listed in table STN), excluding CLLIs that are assigned to software tone groups (that is, those listed in table TONES), for each CLLI digital recording announcement machine (DRAM) trunk CLLI and for CLLI metallic test access driver (MTADRIVER).

Datafilling table CLLIMTCE

Table CLLIMTCE (Common Language Location Identifier Maintenance) contains the trunk group CLLI for each hardware group and the percentage of trunks or service circuits which can be removed from service before a specific type of alarm is displayed for a given CLLI.

The following table shows the datafill specific to Customer Screening at the Trunk Test Position for table CLLIMTCE. Only those fields that apply directly to Customer Screening at the Trunk Test Position are shown. For a description of the other fields, refer to the data schema section of this document.

Datafilling table CLLIMTCE (Sheet 1 of 2)

Field	Subfield or refinement	Entry	Explanation and action
CLLI		alphanumeric	Common Language Location Identifier. This field specifies the code in the CLLI table assigned to the trunk group by the operating company. Enter an alphanumeric CLLI name.
MINALM		1 to 101	Minor Alarm. This field specifies a minor alarm indication and the percentage of out-of-service trunks in the trunk group which activates the minor alarm. Enter a value from 1 to 101.

Customer Screening at the Trunk Test Position (end)

Datafilling table CLLIMTCE (Sheet 2 of 2)

Field	Subfield or refinement	Entry	Explanation and action
MAJALM		1 to 101	Major Alarm. This field specifies a major alarm indication and the percentage of out-of-service trunks in the trunk group which activates the major alarm. Enter a value from 1 to 101.
CRITALM		1 to 101	Critical Alarm. This field specifies a critical alarm indication and the percentage of out-of-service trunks in the trunk group which activates the critical alarm. Enter a value from 1 to 101.

Datafill example for table CLLIMTCE

The following table shows the datafill specific to Customer Screening at the Trunk Test Position for table CLLIMTCE. Only those fields that apply directly to Customer Screening at the Trunk Test Position are shown. For a description of the other fields, refer to the data schema section of this document.

MAP display example for table CLLIMTCE

```
CLLI     SCLLI   MINALM  MAJALM  CRITALM  SYNCTYPE
TSTNOIND  MWIDX  SIGTST  PRFXDIGS
_____________________________________________________

OTWAON23  OCOESS  10      30      50       SYN
0   0        Y        8
```

Translation verification tools

Customer Screening at the Trunk Test Position does not use translation verification tools.

SERVORD

Customer Screening at the Trunk Test Position does not use SERVORD.

Customer Service Change Via SERVORD

Ordering codes

Functional group ordering code: MDC00009

Functionality ordering code: not applicable

Release applicability

BCS16 and up

Prerequisites

To operate, Customer Service Change Via SERVORD has the following prerequisites:

- BAS Generic, BAS00003
- MDC PRO, MDC00009

Description

Customer Service Change via SERVORD allows MDC end users to change features and options assigned to their line equipment numbers (LEN) and directory numbers (DN) and to place their lines in and out of service. The operating company must define, through datafill, the DNs, LENs, and options that end users are allowed to manipulate. Customer Service Change via SERVORD also allows end users to change the assignments of stations to LENs in their customer group. For example, MDC end users can swap the DNs and assigned line options of up to 32 LENs.

Customer Service Change via SERVORD allows the operating company to

- reserve LENs and DNs for the exclusive use of selected MDC customer groups
- dedicate line circuits and associated wiring and hardware for the use of selected business end users
- permit authorized end users from MDC customer groups to log on to the DMS-100 switch at the MAP (maintenance and administration position), with access limited to service orders
- restrict authorized end users in a customer group to making changes exclusively to lines and DNs associated with their customer group

Operation

Command Security

An end user is considered to be a Customer Service Change user if the user name entered at logon time appears in table CDCLOGON (Customer Data Change Logon). When Customer Service Change users log on to the Service

Customer Service Change Via SERVORD (continued)

Order System (SERVORD), they are prevented from using commands that disrupt system operation. Existing DMS-100 features allow the operating company to control which commands are available to particular end users.

There are two methods available to the operating company to prevent end users from executing certain commands. The simplest method is to create a command class and assign to this command class the appropriate commands. The user names used by Customer Service Change users are assigned this command class alone. Commands available to Customer Service Change users are assigned in table CMDS (Command Screening). This table associates command classes with command names. It is this association that prevents Customer Service Change users from using commands that can disrupt system operation.

The dial-up ports designated for use by Customer Service Change users are assigned a command class in table TERMDEV (Terminal Device). This table associates command classes with terminal devices. Using this table, the dial-up ports used by Customer Service Change users can be restricted to an appropriate command class or classes regardless of the user name entered at logon time. This restricted command class ensures that Customer Service Change users are permitted to use only the commands for service orders.

The second method of preventing end users from executing certain commands is to assign appropriate logon profiles and restart profiles for user names assigned to Customer Service Change users. The logon profile is executed automatically when the Customer Service Change user logs in, unless the NOPROFILE command is entered as the first command. For Customer Service Change users, the logon profile can simply consist of the SERVORD command. The restart profile can simply consist of the LOGOUT command. These profiles restrict unauthorized end users from accessing the system.

The user names to be used by Customer Service Change users are datafilled in table CDCLOGON. In this table, each user name is associated with the appropriate IBN customer group name. It is this step that causes service orders to check ownership of DNs and LENs. Failure to enter the user name in table CDCLOGON allows the end user access to all lines and DNs in the office.

Reservation of line equipment numbers

Customer Service Change via SERVORD introduces table CDCLENS (Customer Data Change Line), which allows an operating company to reserve LENs for use in table IBNLINES (IBN Line Assignment).

Each tuple in table CDCLENS contains a LEN and a customer group name. The customer group designated in each tuple is the owner of the LEN. Other

customer groups are not allowed to datafill a LEN in table IBNLINES that belongs to any other customer group.

A LEN can be added to table CDCLENS if one of the following scenarios is present:

- The line is assigned in table IBNLINES, and the customer group specified in table IBNLINES is the owner of the added LEN in table CDCLENS.
- The line appears in table LNINV (Line Circuit Inventory) but does not appear in any other line table.

Table CDCLENS and table IBNLINES interactions

Ownership of a LEN can be removed by deleting the LEN in table CDCLENS. A LEN can be deleted from table CDCLENS at any time, regardless of whether the LEN also appears in table IBNLINES. The following guidelines apply to LENs:

- A LEN assigned in table CDCLENS can only be used in table IBNLINES, because it is reserved for IBN use only. Ownership of a LEN is removed by deleting the LEN from table CDCLENS. The LEN can then be used in any other line table. Only the operating company can delete the LEN from table CDCLENS.
- When a LEN is assigned in table CDCLENS and table IBNLINES, the LEN must be datafilled in each table as a separate data change. The order of entering the data changes is not important, because the end result is the same.
- When a tuple is added to or changed in table IBNLINES, the table determines if the LEN also appears in table CDCLENS. If the LEN is found in table CDCLENS, the customer group name must be the same in both tables. If the customer group name is not the same in both tables, the data modification order (DMO) is rejected.
- When a tuple is added to or changed in table CDCLENS, the table determines if the LEN appears in table IBNLINES. If the LEN is found in table IBNLINES, the customer group name must be the same in both tables. If the customer group name is not the same in both tables, the DMO is rejected.

When the LEN appears in both tables, the customer group name of a LEN cannot be changed in either table, unless it is changed by the operating company. To change the customer group name of a LEN, the operating company must delete the LEN from one of the tables. It is easier to delete the LEN from table CDCLENS than it is to delete the LEN from table IBNLINES, because table CDCLENS has the simpler data schema of the two tables.

Customer Service Change Via SERVORD (continued)

Line equipment number status

Table LNINV lists the data for each line card slot. An operating company or a customer group user determines the card status of a LEN by examining the data of a line card slot.

A LEN can have any of the following card statuses:

- When a LEN is temporarily taken out of service, it has the CUTOFF status.
- When a LEN is not assigned (but is available for assignment) in a line table, it has the HASU (hardware assigned, software unassigned) status.
- When a LEN appears in table CDCLENS but cannot be found in any other line table, it has the RESERVED status. When a LEN has the RESERVED status, it cannot be deleted from table LNINV. The LEN must be deleted first from table CDCLENS before it can be deleted from table LNINV. After the LEN is deleted from table CDCLENS, it is returned to the HASU status.
- When a LEN is not equipped with a line card, it has the UNEQUIP status.
- When a LEN is assigned to a working subscriber line and is also present in one of the line tables, it has the WORKING status. Also, if a LEN is datafilled in both table CDCLENS and table IBNLINES, it has the WORKING status. When the LEN is deleted from table CDCLENS and table IBNLINES, it automatically returns to the HASU status.

The following figure illustrates the possible sequences of additions and deletions of a LEN from tables CDCLENS and IBNLINES.

Customer Service Change Via SERVORD (continued)

Interactions of table CDCLENS and table IBNLINES with LENs

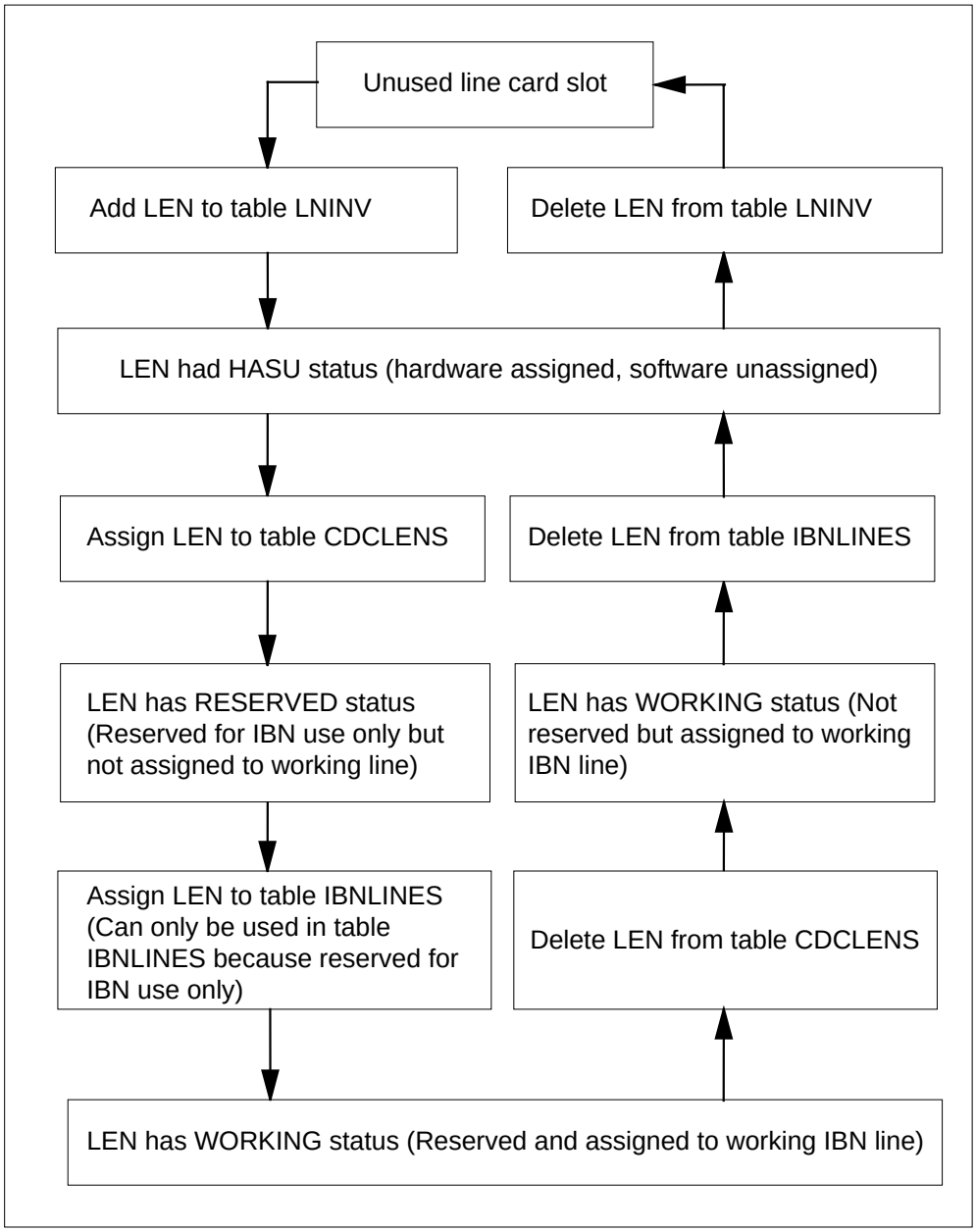

User interface

Customer Service Change Via SERVORD does not affect user interface.

Customer Service Change Via SERVORD (continued)

Translations table flow

The Customer Service Change Via SERVORD translations tables are described in the following list:

- (Line Circuit Inventory) lists the data for each line card slot.
- Table LNINV (Line Circuit Inventory) lists the data for each line card slot.
- Table CUSTHEAD (Customer Group Head) defines the public and private transaction capability application part (TCAP) translator names for each customer group
- Table CDCLENS (Customer Data Change Line) associates IBN customer groups with LENs in order to establish ownership of LENs. The ownership information is used to restrict the LENs that can be queried or modified by Customer Service Change users.
- Table CDCLOGON (Customer Data Change Logon) lists the logon user name that is associated with the appropriate IBN customer group name. It is this step that causes service orders to check ownership of DNs and LENs. Failure to enter the user name in table CDCLOGON allows the end user access to all lines and DNs in the office.
- Table IBNLINES (IBN Line Assignment) contains the line assignment for all MDC single lines and attendant console stations. This table is modified so that LENs can be owned by IBN customer groups. This table enforces the ownership of LENs established by table CDCLENS.

An attempt to add a line to or change an existing line in table IBNLINES is rejected if the customer group name differs from that specified in table CDCLENS. This restriction does not apply to lines whose LENs are absent from table CDCLENS. It is not necessary to datafill table CDCLENS in order to datafill table IBNLINES. These two tables can be datafilled in any order, but LENs are normally datafilled in table CDCLENS before they are datafilled in table IBNLINES.

The Customer Service Change Via SERVORD translation process is shown in the flowchart that follows.

Customer Service Change Via SERVORD (continued)

Table flow for Customer Service Change Via SERVORD

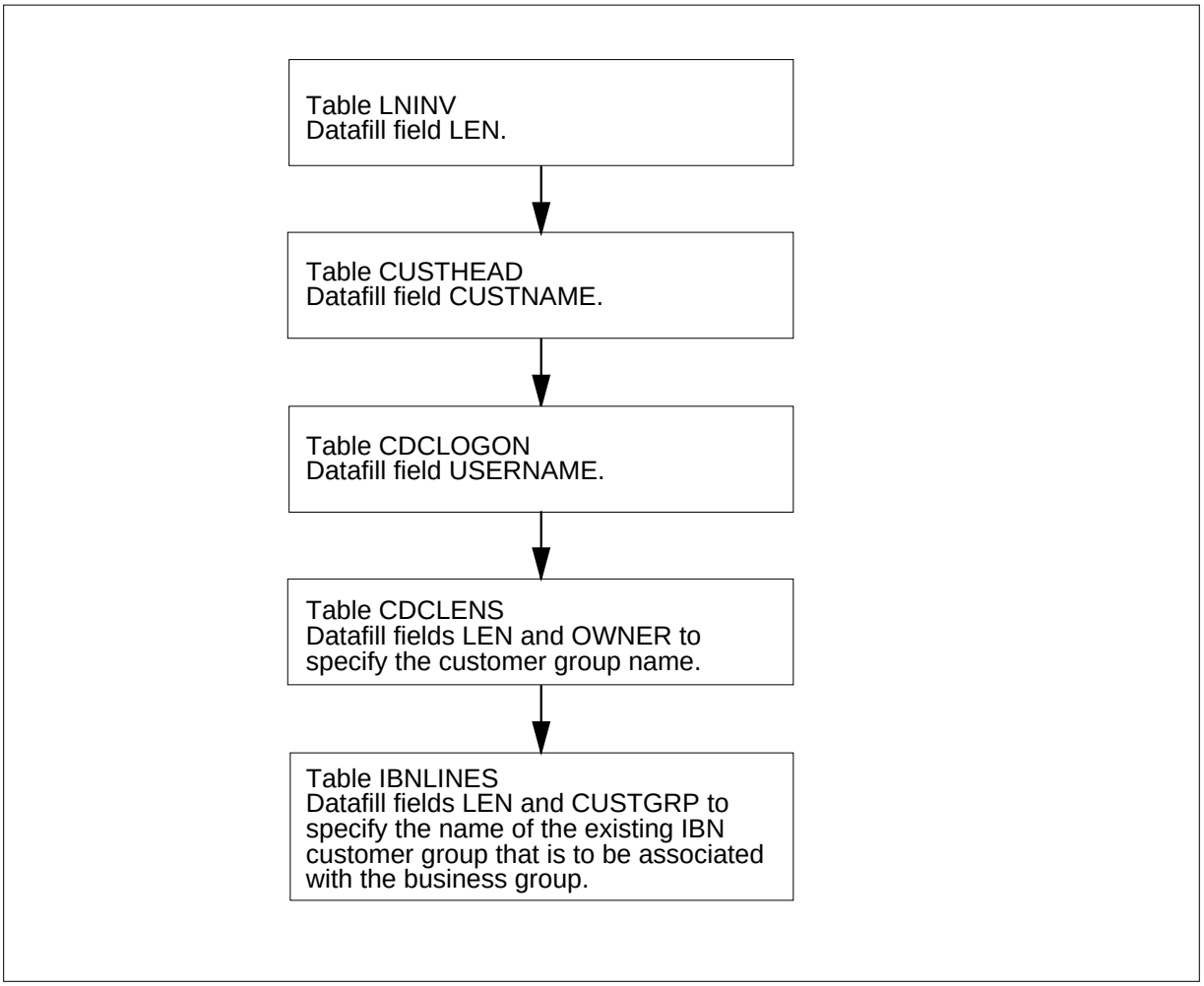

The following table lists the datafill content used in the flowchart.

Datafill example for Customer Service Change Via SERVORD

Datafill table	Example data
LNINV	HOST 00 1 18 08 2x17AB STDLN HASU N NL N NIL
CUSTHEAD	PRADER PRAXLA NDGT NIL (VACTRMT 0) (EX TNCOS 0) $
CDCLOGON	PRADER CARLING GENERAL Y
CDCLENS	HOST 00 1 18 08 CARLING
IBNLINES	HOST 00 1 18 08 0 DT STN IBN 5554667 CARLING 0 0 919 $

Customer Service Change Via SERVORD (continued)

Limitations and restrictions

The following limitations and restrictions apply to Customer Service Change Via SERVORD:

- Customer Service Change via SERVORD cannot be used with DMS-100 business sets. As a result, table KSETLINE (Business Set and Data Unit Line Assignment) has not been enhanced to enforce ownership of customer groups. Table KSETLINE does not accept LENs that appear in table CDCLENS.
- A LEN assigned in table CDCLENS cannot be used in any other line table, except table IBNLINES.
- When a LEN appears in table CDCLENS, it is reserved for IBN use only and cannot be used in any other line table. Conversely, when a LEN is deleted from table CDCLENS, the LEN can be used in any other line table.
- When a LEN appears in both table CDCLENS and table IBNLINES, the customer group specified in the two tables must match.

Interactions

Customer Service Change Via SERVORD has no functionality interactions.

Activation/deactivation by the end user

Customer Service Change Via SERVORD requires no activation or deactivation by the end user.

Billing

Customer Service Change Via SERVORD does not affect billing.

Station Message Detail Recording

Customer Service Change Via SERVORD does not affect Station Message Detail Recording.

Datafilling office parameters

Datafill procedure for CUSTOMER_DATA_CHANGE_LOGS

CUSTOMER_DATA_CHANGE_LOGS, an office parameter in table OFCVAR (Variable Office), controls whether the DMS switch generates a CDC101 log report each time a Customer Service Change user issues a SERVORD command. To activate command logging, the operating company must set the office parameter to Y.

The following table shows the office parameters used by Customer Service Change Via SERVORD. For more information about office parameters, refer to *Office Parameters Reference Manual.*

Office parameters used by Customer Service Change Via SERVORD

Table name	Parameter name	Explanation and action
OFCVAR	CUSTOMER_DATA_CHANGE_ LOGS	Indicates whether the DMS switch generates a CDC101 log report each time a Customer Service Change user issues a SERVORD command. Enter Y or N. N is the default value.

Datafill sequence

The following table lists the tables that require datafill to implement Customer Service Change Via SERVORD. The tables are listed in the order in which they are to be datafilled.

Datafill tables required for Customer Service Change Via SERVORD

Table	Purpose of table
LNINV	Line Circuit Inventory table. This table lists the data for each line card slot.
CUSTHEAD	Customer Group Head table. This table lists the names assigned to the blocks of data in table IBNXLA that store the data for the translation of digits.
CDCLOGON	Customer Data Change Logon Table. This table lists the logon user name associated with an owner name
CDCLENS	Customer Data Change Line Table. This table lists the line equipment numbers that are assigned to a customer group that has customer data change ability.
IBNLINES (Note)	IBN Line Assignments table. This table contains the line assignments for data channel links for the Bulk Calling Line Identification (BCLI) feature under the format name of BL. ***Note:*** This table is datafilled through SERVORD; therefore, no datafill procedure or example is provided. Refer to “SERVORD" for an example of using SERVORD to datafill this table.
Note: This table is datafilled through SERVORD; therefore, no datafill procedure is provided.	

Datafilling table LNINV

Table LNINV (Line Circuit Inventory) lists the data for each line card slot. The line that contains the LEN appears in this table. Customer Service Change via SERVORD permits a Customer Service Change user to query and change

Customer Service Change Via SERVORD (continued)

only those LENs that are datafilled in table LNINV. When a LEN has the RESERVED status, it cannot be deleted from table LNINV. The LEN must be deleted first from table CDCLENS before it can be deleted from table LNINV.

The following table shows the datafill specific to Customer Service Change Via SERVORD for table LNINV. Only those fields that apply directly to Customer Service Change Via SERVORD are shown. For a description of the other fields, refer to the data schema section of this document.

Datafilling table LNINV

Field	Subfield or refinement	Entry	Explanation and action
LEN		the LEN	Line Equipment Number. This field specifies the site, frame, unit, drawer, shelf, slot, and circuit number for the line. Enter the LEN.
STATUS		HASU, WORKING, UNEQUIP, CUTOFF, or RESERVED	Line Inventory Availability Status. This field specifies the line card status of the LEN. Enter HASU, WORKING, UNEQUIP, CUTOFF, or RESERVED.

Datafill example for table LNINV

The following example shows sample datafill for table LNINV.

MAP display example for table LNINV

```
LEN              CARDCODE  PDGRP  STATUS GND  BNV  MNO  CAR
_________________________________________________________
HOST 00 1 18 08  2x17AB  STDLN   HASU    N    NL   N  NIL
```

Datafilling table CUSTHEAD

Table CUSTHEAD (Customer Group Head) defines the public and private TCAP translator names for each customer group.

The following table shows the datafill specific to Customer Service Change Via SERVORD for table CUSTHEAD. Only those fields that apply directly to

Customer Service Change Via SERVORD are shown. For a description of the other fields, refer to the data schema section of this document.

Datafilling table CUSTHEAD

Field	Subfield or refinement	Entry	Explanation and action
CUSTNAME		customer group name	Customer Group Name. This field specifies the name assigned to the customer group. Enter the customer group name.

Datafill example for table CUSTHEAD

The following example shows sample datafill for table CUSTHEAD.

MAP display example for table CUSTHEAD

```
CUSTNAME  CUSTXLA  DGCOLNM  IDIGCOL OPTIONS
_________________________________________________________
PRADER    PRAXLA    NDGT     NIL   (VACTRMT 0) (EX TNCOS 0)$
```

Datafilling table CDCLENS

Table CDCLENS (Customer Data Change Line) associates IBN customer groups with LENs in order to establish ownership of LENs. Customer Service Change via SERVORD permits a Customer Service Change user to query and change only those LENs that are datafilled in table LNINV. When a LEN appears in table IBNLINES, it cannot be added to table CDCLENS under a different customer group.

The following table shows the datafill specific to Customer Service Change Via SERVORD for table CDCLENS. Only those fields that apply directly to

Customer Service Change Via SERVORD (continued)

Customer Service Change Via SERVORD are shown. For a description of the other fields, refer to the data schema section of this document.

Datafilling table CDCLENS

Field	Subfield or refinement	Entry	Explanation and action
LEN		the LEN	Line Equipment Number. This field specifies the LEN owned by the customer group. Enter the LEN.
OWNER		customer group name	Owner. This field specifies the name of the customer group that owns the LEN. Enter the customer group name.

Datafill example for table CDCLENS

The following example shows sample datafill for table CDCLENS.

MAP display example for table CDCLENS

```
LEN                 OWNER
_____________________________________________________________
HOST 00 1 18 08   CARLING
```

Datafilling table CDCLOGON

Table CDCLOGON (Customer Data Change Logon) lists the logon user name that is associated with the appropriate IBN customer group name. It is this step that causes service orders to check ownership of DNs and LENs. Failure to enter the user name in table CDCLOGON allows the end user access to all lines and DNs in the office.

The following table shows the datafill specific to Customer Service Change Via SERVORD for table CDCLOGON. Only those fields that apply directly to

Customer Service Change Via SERVORD are shown. For a description of the other fields, refer to the data schema section of this document.

Datafilling table CDCLOGON

Field	Subfield or refinement	Entry	Explanation and action
USERNAME		logon user name	User Name. This field specifies the logon user name assigned to the customer group. Enter the logon user name.
OWNER		the owner name	Owner. This field specifies the name assigned to the owner. Enter the owner name.

Datafill example for table CDCLOGON

The following example shows sample datafill for table CDCLOGON.

MAP display example for table CDCLOGON

```
USERNAME    OWNER      CLASS       POF
_______________________________________________________
PRATER     CARLING    GENERAL       Y
```

Translation verification tools

Customer Service Change Via SERVORD does not use translation verification tools.

SERVORD

SERVORD uses table CDCLENS to determine whether a Customer Service Change user is permitted to enter commands to query or modify a LEN. A SERVORD user whose customer group name is found in table CDCLOGON is considered to be a Customer Service Change user.

SERVORD checks table CDCLENS to determine which LEN belongs to that SERVORD user. The ownership check is accomplished by comparing the customer group field in table CDCLOGON to the customer group field in table CDCLENS.

SERVORD limitations and restrictions

Customer Service Change Via SERVORD has no SERVORD limitations and restrictions.

Customer Service Change Via SERVORD (end)

SERVORD prompts

The following table shows the SERVORD prompts used to change Customer Service Change Via SERVORD.

SERVORD prompts for Customer Service Change Via SERVORD

Prompt	Valid input	Explanation
LINE_INFO	CUST	Specifies the line information to be changed or displayed. Enter CUST.

SERVORD example for changing Customer Service Change Via SERVORD

The following SERVORD example shows how Customer Service Change Via SERVORD is added to using the SERVORD command.

SERVORD example for Customer Service Change Via SERVORD in prompt mode

```
>DSP
WHAT:
> LINE
DN_OR_LEN:
> HOST 00 1 18 08 1 CUST
OPTKEY:
> 1
LINE INFO:
> CUST
```

SERVORD example for Customer Service Change Via SERVORD in no-prompt mode

```
>DSP LINE HOST 00 1 18 08 1 CUST
```

Direct Inward Dialing (DID)

Ordering codes

Functional group ordering code: MDC00009

Functionality ordering code: not applicable

Release applicability

BCS08 and up

Prerequisites

To operate, Direct Inward Dialing (DID) has the following prerequisites:

- BAS Generic, BAS00003
- MDC Minimum, MDC00001

Description

Incoming calls from the exchange network (not special cicrcuits such as FX or WATS) may reach a specific customer group station without attendant assistance. The calling party dials the 7 digit directory number to reach the station.

Operation

With DID, a DMS-100 switch receives four to seven digits from a central office. The digits identify a line on the same (intraoffice) or another (interoffice) DMS-100. For interoffice calls, the digits are outpulsed on standard interbuilding tie trunks using dial pulse (DP), dual-tone multifrequency (DTMF), or multifrequency (MF) signaling.

Kodak DID digit reception and outpulsing

1ESS switches receive five digits in DP signaling. The digits identify a line on the same or another switch.

The 1ESS translates the first two digits received and outpulses four digits to another switch in DP (buildings 26 and 313) and MF (building 12) signaling.

Translations table flow

Direct Inward Dialing (DID) does not affect translations table flow.

Direct Inward Dialing (DID) (end)

Limitations and restrictions

The following limitations and restrictions apply to Direct Inward Dialing (DID):

- A standard loop 900- trunk must be used.
- Digit signaling can be DP, DTMF, or MF. For DTMF or MF signaling, the DMS-100 switch must have a DTMF or MF tone receiver, respectively.

Interactions

The following paragraphs describe the interactions between Direct Inward Dialing (DID) and other functionalities.

The Denied Incoming (DIN) feature interacts with Direct Inward Dialing (DID). If DIN is assigned to a line, DID access is denied and the caller is routed to an announcement or attendant, depending on DIN datafill. If the caller is routed to an announcement, it is not returned to the central office.

Activation/deactivation by the end user

Direct Inward Dialing (DID) requires no activation or deactivation by the end user.

Billing

Direct Inward Dialing (DID) does not affect billing.

Station Message Detail Recording

Direct Inward Dialing (DID) does not affect Station Message Detail Recording.

Datafilling office parameters

Direct Inward Dialing (DID) does not affect office parameters.

Datafill sequence

Direct Inward Dialing (DID) does not affect datafill.

Translation verification tools

Direct Inward Dialing (DID) does not use translation verification tools.

SERVORD

Direct Inward Dialing (DID) does not use SERVORD.

Index

A

ACD groups
datafilling Vol. 16, 11-8, Vol. 16, 12-13, Vol. 16, 13-16
ACDADMIN, table
datafilling Vol. 16, 2-51
ACDENLOG , table
datafilling Vol. 16, 2-287
ACDENLOG, table
datafilling Vol. 16, 2-217
ACDGRP, table
datafilling Vol. 12, 1-131, Vol. 15, 6-35, Vol. 16, 2-52, Vol. 16, 2-75, Vol. 16, 2-84, Vol. 16, 2-98, Vol. 16, 2-175, Vol. 16, 2-215, Vol. 16, 2-236, Vol. 16, 2-257, Vol. 16, 3-104, Vol. 16, 4-22, Vol. 16, 4-36, Vol. 16, 7-21, Vol. 16, 7-35, Vol. 16, 11-10, Vol. 16, 12-14, Vol. 16, 13-17
ACDLOGIN, table
datafilling Vol. 16, 2-54, Vol. 16, 2-198, Vol. 16, 2-216, Vol. 16, 11-13, Vol. 16, 12-21, Vol. 16, 13-23
ACDMISPL, table
datafilling Vol. 16, 2-73, Vol. 16, 2-113, Vol. 16, 2-256, Vol. 16, 4-24, Vol. 16, 11-9, Vol. 16, 12-14, Vol. 16, 13-16
ACDMISSP, table
datafilling Vol. 16, 2-74, Vol. 16, 11-9, Vol. 16, 12-14
ACDRTE, table
datafilling Vol. 16, 2-55, Vol. 16, 2-77, Vol. 16, 2-190, Vol. 16, 2-258, Vol. 16, 4-38, Vol. 16, 11-11, Vol. 16, 12-16, Vol. 16, 13-19
ACDSGRP, table
datafilling Vol. 16, 2-195, Vol. 16, 11-12, Vol. 16, 12-19
ACLANG, table
datafilling Vol. 12, 2-42
ACMSG, table
datafilling Vol. 12, 2-43, Vol. 13, 4-139
activating
2-Way Digital FX Trunk - Business Services Vol. 11, 2-4
3-Way Conference/Transfer Vol. 11, 2-11
3WC Dial 0 for 608 Cord Board Vol. 11, 2-19
3WC/Call Transfer for UCD Vol. 11, 2-28
3WC/CXR to 2500 Set Call Waiting Interactions Vol. 11, 2-32
6 Port Conference Circuit Use Control Vol. 11, 2-36
A/C Activate/Deactivate of CFU/CFI Vol. 12, 3-6
AC to IBNISUP Interworking Vol. 12, 3-13
Access Feature Grouping Vol. 15, 4-32
Access to CCSA (BV0420) Vol. 11, 2-44
Access to CO from PBX Vol. 11, 2-51
Access to ETN Vol. 11, 2-60
Access to Special Service Facilities Vol. 11, 2-65
ACD - Mgmt Rep 2 Way Data Stream Vol. 16, 2-70
ACD Access Feature Grouping Vol. 16, 2-4
ACD CompuCALL Vol. 16, 3-38
ACD Night Service Call Queue Clearing Vol. 16, 2-82
ACD Nodal Treatment in NACD Vol. 16, 4-5
ACD on 2500 Set Vol. 16, 2-93
ACD Remote Load Management I Vol. 16, 2-111
ACD Supergroup Vol. 16, 4-20
ACD-Load Management III Vol. 16, 2-43

AC-Extended Calls to CFB/CFD Vol. 11, 2-40
ANI Information in SMDR Output Vol. 12, 3-28
ARS - (Basic) (BV0506) Vol. 12, 3-86
Attendant Call Detail Entry Vol. 12, 3-41
Attendant Call Park Recall Timer Vol. 11, 2-74
Attendant Call Selection Vol. 11, 2-78
Attendant Camp-On Vol. 11, 2-84
Attendant Conference (Maximum Six Conferees) Vol. 11, 2-93
Attendant Console Call Hold Recall Vol. 11, 2-102
Attendant Console Display Vol. 11, 2-113
Attendant Console End-to-End Signalling Vol. 11, 2-117
Attendant Console OM on an Individual Console Basis Vol. 12, 2-17
Attendant Control of Trunk Group Access Vol. 11, 2-124
Attendant Control of VFG Vol. 12, 3-51
Attendant Display of Queued Calls by ICI Key Vol. 11, 2-130
Attendant Locked Loop Operation Vol. 11, 2-138
Attendant Message Waiting Vol. 12, 3-63
Attendant Release Upon Completion of Dialing Vol. 11, 2-141
Attendant Set Up Conference
10 or More Conferees Vol. 12, 3-73
Attendant Speed Calling Vol. 11, 2-146
Attendant to Recorded Announcement Vol. 11, 2-153
Attendant to UCD Vol. 11, 2-158
Attendant Transfer Vol. 11, 2-166
Attendent - Auto Dial Vol. 11, 2-68
Audio Input on Incoming Calls in Queue (BV0602) Vol. 11, 2-172
Audio Interlude (BC0946) Vol. 11, 2-181
Audio Table Expansion (AD0822) Vol. 11, 2-193
Authcode for MDR Vol. 14, 4-13
Authorization Codes (BV0494) Vol. 12, 3-82
Automatic Intercept System (AIS) Enhancement Vol. 11, 2-201
Automatic Line Vol. 11, 2-216
Automatic Line and MADN Vol. 14, 2-5
Automatic Recall Vol. 11, 2-222
Base ACD Vol. 16, 2-158
Bellcore AMA Enhanced Automatic Route Selection Translations Vol. 14, 4-22
Blind Transfer Recall Vol. 11, 2-236
Blind Transfer Recall Identification Vol. 11, 2-249
Block Calling Name/Number Delivery Blocking per Call Vol. 15, 7-9
BOC AMA Call Code 032 Vol. 14, 4-31
BR0747 CCSA VFG Option Vol. 15, 1-3
Business Set Busy Indicator Vol. 14, 2-11
Business Set Call Waiting Originate Vol. 14, 2-20
Business Set Dial Call Waiting Vol. 14, 2-30
Busy Verification - Stations Vol. 11, 2-262
Busy Verification - Trunks Vol. 11, 2-274
Call Back Queuing (Basic) Vol. 12, 3-96
Call Forcing Tone Optionality Vol. 16, 2-214
Call Forward All Calls Vol. 11, 2-288
Call Forward Busy Vol. 11, 2-298
Call Forward Busy - Inhibit Make & Inhibit Line Busy Vol. 12, 3-109
Call Forward Busy/Don't Answer - Internal/External Vol. 12, 3-124
Call Forward Do Not Answer and Call Waiting Interaction Vol. 11, 2-328, Vol. 12, 3-143
Call Forward No Answer Vol. 11, 2-312
Call Forward Prevention Enhancements Vol. 12, 3-161
Call Forward Timed Vol. 12, 3-188
Call Forward/Automatic Dial Display Vol. 14, 2-39
Call Forwarding of Call Waiting Calls Vol. 12, 3-197
Call Hold Vol. 11, 2-340
Call Park Vol. 11, 2-353
Call Park Recall Identification Vol. 14, 3-9
Call Pickup Vol. 11, 2-367
Call Pickup Transparency Vol. 11, 2-374
Call Request Call Processing Enhancements Vol. 11, 2-377, Vol. 12, 3-202
Call Request Retrieve/Key Short Hunt Interaction Control Vol. 12, 3-205
Call Transfer Enhancement Vol. 11, 2-383
Call Waiting Vol. 11, 2-397

Call Waiting - Originating Vol. 11, 2-416
Call waiting 1A transparency issues Vol. 12, 3-212
Call Waiting for 3-Way Calling Vol. 11, 2-405
Calling Name Delivery on MADN (CNAMD on MADN) Vol. 13, 2-5
Calling Name Inspect Key Vol. 15, 2-6
Calling Name/Number Delivery Blocking (CNNB) Vol. 15, 7-25
Calling Number and NCOS Display on Attendant Console Vol. 13, 4-26
Camp On with Music Vol. 11, 2-426
CCSA Line Option Vol. 14, 4-35
CFBL Inhibit Line Busy/Inhibit MB Enhancements Vol. 12, 3-225
CFD from Hunt Group Station Vol. 11, 2-434
CFD Interaction with Three-Way Calling Vol. 11, 2-443
CFGDA for Hunt Groups Vol. 11, 2-448
CFW for MADN Secondary Members Vol. 14, 3-19
Change EBS Features During Talking State Vol. 12, 3-230
Change Line Class Codes via SERVORD Vol. 12, 3-257
Class of Service Restrictions Vol. 11, 2-456
CLASS on MBS/MADN Base Vol. 13, 2-17
CLASS on MDC Base Vol. 13, 2-48
Class on MVP Base Vol. 13, 2-74
CLEN for EBS Vol. 12, 3-277
Code Call Access Vol. 11, 2-462
Code Calling - Line Termination Vol. 11, 2-470
Code Restriction Vol. 11, 2-478
CompuCALLEnhancements-Screen-Assisted Telephony Vol. 16, 3-134
CompuCALL Integration with ICCM Vol. 16, 7-16
CompuCALL Transport Enhancements Vol. 16, 5-18
Conference Join Vol. 11, 2-487
Control of Multiple Call Forwarding Vol. 12, 3-288
COT Enhancement Vol. 13, 2-81
CPU Datafill Enhancements Vol. 11, 2-494
Customer Administration of Data Vol. 14, 4-42
Customer Dialed Account Recording (CDAR) Vol. 14, 4-59
Customer Group Transparency Vol. 11, 2-501
Customer Network Data Changes Vol. 14, 4-75
Customer Screening at the Trunk Test Position Vol. 14, 4-90
Customer Service Change Via SERVORD Vol. 14, 4-100
Cut Through Dialing Vol. 12, 3-299
Cut Thru and Thru Dialing Interaction Vol. 12, 3-304
Cut Thru Dialing for IBN Lines & A/C Vol. 12, 3-312
Denied Incoming Vol. 11, 2-510
Dial - Call Waiting Vol. 11, 2-522
Dialtone Passback via PX Trunks for MDC Vol. 12, 3-319
Dictation Access and Control (DTMF Only) Vol. 11, 2-532
Direct Inward Dialing (DID) Vol. 14, 4-108
Direct Inward System Access (DISA) Vol. 12, 3-329
Direct Outward Dialing (DOD) Vol. 11, 2-537
Direct Station Selection/Busy Lamp Field for MBS Vol. 15, 3-5
Directed Call Park Vol. 11, 2-545
Directed Call Pickup - Barge In Vol. 11, 2-556
Directed Call Pickup - Non Barge In Vol. 11, 2-566
DISA
Invalid Authcode Treatment Option Vol. 12, 3-340
DISA - Remove Auth Code Timeout Vol. 12, 3-345
DISA Enhancements Vol. 12, 3-333
DISA Third Dial Tone Vol. 12, 3-351
Display Called About Number Vol. 16, 2-233
Distinctive and Ring Again Ringing Vol. 11, 2-571
Distinctive Call Waiting Ringback Vol. 12, 3-358

Distinctive Call Waiting Tones Vol. 11, 2-577
Distinctive Ringing Vol. 11, 2-584
Distinctive Ringing Enhancements Vol. 11, 2-596
Do Not Disturb Vol. 12, 2-24
DT after CFW Cancel and Spd Call Programming Vol. 12, 3-371
DTMF Outpulsing on a Line Vol. 11, 2-612
Dynamic Measurements Vol. 12, 2-32
E911 Single Button Transfer Operation Vol. 15, 3-22
EAEO - IBN PIC Using SERVORD Vol. 12, 3-376
EBS as a Message Center Vol. 14, 2-44
EBS as a Message Center - Enhancements Vol. 14, 2-52
EBS Call Forwarding on a per Key Basis Vol. 14, 3-40
ECM/SCAI Support for Non-ACD - Ph 1 Vol. 16, 3-150
End to End Signalling via Speed Call Vol. 11, 2-625
Enhanced EBS Reason Display Vol. 14, 2-85
Enhanced Handling of ACD Re-Enqueued Calls Vol. 16, 2-255
Enhanced MADN Call Control Vol. 14, 3-79
Enhanced SERVORD II Vol. 12, 3-389
ERWT for Lines, Trunks for ARS, Call Back Queue Features Vol. 12, 3-397
ESN - Answer Supervision Generation Vol. 12, 3-404
ESN - Authorization Codes Vol. 12, 3-411
ESN - Call-Back Queuing Vol. 12, 3-424
ESN - Network Automatic Route Selection (TEHO and HEHO) Vol. 15, 1-9
ESN - Network Class of Service Vol. 15, 1-25
ESN - Network Information Signals Vol. 15, 1-33
ESN - Network Speed Call Vol. 15, 1-55
ESN - Off-hook Queuing Vol. 12, 3-435
Executive Message Service Enhancement - Multi EMW per DN Vol. 14, 2-93
Executive Right of Way Vol. 11, 2-632
Fast Transfer for Meridian Business Set Vol. 15, 3-33
Flexible Console Alerting Vol. 11, 2-641
Flexible Display Language Vol. 12, 2-38
Flexible Intercept Vol. 11, 2-649
Flexible Station Controlled Conference (500/2500 Sets) Vol. 12, 3-448
Forced Announcements for NACD Vol. 16, 4-35
Generalized Distinctive Ringing Vol. 11, 2-652
Group Intercom All Call Vol. 14, 3-96
Group Number Feature Control Vol. 13, 1-6
IBN - Optional Call Forward Links Vol. 13, 1-78
IBN & ESB Compatibility Vol. 13, 1-76
IBN Auth Codes for Alternate Route Selection (ARS) Vol. 13, 1-46
IBN Call Forward Enhancements Vol. 13, 1-52
IBN Call Forward Validation Vol. 11, 2-661
IBN Cancel Call Waiting Vol. 11, 2-670
IBN Class 5 INWATS Vol. 13, 1-57
IBN Class 5 Psuedo OUTWATS Vol. 13, 1-65
IBN Feature Activation OMs I Vol. 11, 2-678
IBN ISUP NETINFO Translations Vol. 13, 3-15
IBN LCC Compatibility with FRO Line Option Vol. 11, 2-685
IBN Outpulsing to POTS Trunks Vol. 11, 2-702
IBN Quantity Control (100 Lines) Vol. 11, 2-706
IBN Trunks with ISUP Signalling Vol. 13, 1-92
IBNRTE Table Capacity Increase Vol. 11, 2-708
ICM Configuration Management Vol. 16, 9-33
ICM Variable Wrap Reporting Vol. 16, 9-103
IDDD via ARS Vol. 15, 1-128
Immediate Answer Reporting for IBN Vol. 11, 2-715
Immediate Notification of Priority Enqueued Calls Vol. 12, 2-45
Increase Auth Codes per Customer Group Vol. 13, 1-109

Increase in Number of IBN Customer Groups Vol. 11, 2-719
Increase Number of Equivalent DN Appearances for IBN Vol. 11, 2-724
Individual Page from GIC Vol. 14, 3-105
Interactive Display Menu on MBS Sets Vol. 15, 3-53
Interposition Calls and Transfers Vol. 11, 2-729
INWATS to Direct Inward System Access Vol. 13, 1-113
ISUP Shared Trunking Enhancement Vol. 13, 3-36
Killer Trunk Report Separation Vol. 15, 1-135
Last Number Redial (LNR) Vol. 12, 1-3
Last Number Redial from Set Vol. 14, 3-114
Lockout Vol. 12, 1-16
Loud Speaker & Radio Paging Access Vol. 12, 1-21
Loudspeaker Paging - Line Termination Vol. 12, 1-27
M5209 Introduction Vol. 14, 2-100
MACD Nodal Service Observing Vol. 16, 2-270
MACD PIN Configuration and Control Vol. 16, 2-284
MADN and Conference Interaction Vol. 12, 1-35
MADN Bridging - 3 Way Call Vol. 14, 3-119
MADN Cut-off on Disconnect (COD) Vol. 14, 3-131
MADN Ring Forward Vol. 14, 3-141
MADN Service Orders Vol. 14, 2-114
Make Set Busy Except GIC Vol. 14, 3-155
MAP Alarm Level Screening Vol. 15, 1-147
MAP Display for Attendant OM Vol. 12, 1-37
MBG Alternate Terminating Number Billing Vol. 13, 3-47
MBG Enabling of Feature Networking Vol. 13, 3-54
MBG Feature Networking Control Vol. 13, 3-59
MBG II - Support of IBN7 Trunk Features Vol. 13, 3-72
MBG III - Support of Private Numbering Plan Vol. 13, 3-80
MBG IV - Support of Network EMW Vol. 13, 3-116
MBG Redirection Enhancements for ISUP IBN Trunks Vol. 13, 4-37
MBS 30-Port Conference Vol. 12, 1-44
MBS Auto Answer Back Vol. 14, 2-132
MBS Automatic Dial Vol. 14, 2-140
MBS Automatic Line Vol. 14, 2-145
MBS Busy Override Vol. 14, 2-152
MBS Call Back Queuing Vol. 14, 2-167
MBS Call Forward All Calls Feature Key S/W Vol. 14, 2-182
MBS Call Park Vol. 14, 2-197
MBS Call Pickup Feature Key S/W Vol. 14, 2-213
MBS Call Waiting Vol. 14, 2-222
MBS Display Called Number Vol. 14, 2-228
MBS Display Calling Number Vol. 14, 2-236
MBS End to End Signalling Vol. 14, 2-242
MBS Feature Code Access Vol. 14, 2-246
MBS Feature Display Vol. 14, 2-253
MBS Group Intercom Vol. 14, 2-261
MBS Held Calls Vol. 14, 2-266
MBS II Templates Vol. 14, 2-121
MBS Individual Business Line Vol. 14, 2-272
MBS Intercom Vol. 14, 2-283
MBS Listen on Hold Vol. 14, 2-288
MBS MADN SCA/MCA (across Switch) Vol. 14, 2-293
MBS Make Set Busy Vol. 14, 2-301
MBS Malicious Call Hold Vol. 14, 2-311
MBS Message Waiting Vol. 13, 1-125
MBS Onhook Dialing Vol. 14, 2-315
MBS Power Feature - Name Programming Vol. 15, 3-69
MBS Privacy Release (across Switch) Vol. 14, 2-319
MBS Query Time Key Vol. 14, 2-330
MBS Ring-Again Feature Key S/W Vol. 14, 2-336
MBS Speed Calling Feature Key S/W Vol. 14, 2-346
MBS Three-Way Calling Transfer Vol. 14, 2-357

MDC AFG Add Option Vol. 15, 4-80
MDC Circuit Test Enhancement Vol. 14, 2-368
MDC Copy Feature Set Vol. 15, 4-65
MDC CUSTENG Robustness Vol. 12, 1-52
MDC DSS/BLF Set Based Vol. 15, 5-10
MDC Enhanced WATS Vol. 15, 1-155
MDC MBS Interactive Display Vol. 15, 4-92
MDC Single Button Transfer Vol. 15, 3-76
MDC Single Line Queue Vol. 15, 5-29
MDC Variable CDAR Vol. 13, 1-136
MDR Data in the AMA Stream Vol. 15, 1-202
Meet Me Page Vol. 13, 1-166
Meet-Me Conference Vol. 12, 1-62, Vol. 13, 1-155
Message Service - Leave Message Vol. 14, 2-383
Message Service - List Management Vol. 14, 2-402
Message Waiting Lamp Update - Link Phone Vol. 13, 1-177
Multi-location Business Group I Vol. 13, 3-124
Multipilot Directory Numbers on MLH Group Vol. 15, 1-220
Multiple Position Hunt with Queue Vol. 13, 1-194
Music on Hold for EBS Vol. 14, 3-170
MVP Dial Plan Vol. 12, 1-71
Name Display for MADN Members Vol. 14, 3-187
NAS Features Optionality Vol. 13, 4-40
Network Access Registers (NARS) Vol. 15, 6-19
Network Attendant Control Vol. 13, 4-46
Network Attendant Recall Vol. 13, 4-51
Network Camp-On-II Vol. 13, 4-55
Network Dial Plan Display Vol. 13, 4-60
Network Display Enhancement Vol. 13, 4-80
Network Feature Access Restriction Vol. 15, 8-8
Network Intelligent Call Management Vol. 16, 7-31
Network Message Waiting Indicator (MWI) Vol. 13, 4-88
Network Name Display Vol. 13, 4-107
Network Name Display for Attendant Consoles Vol. 13, 4-136
Network Wide Ring Again Vol. 13, 4-157
Networked ACD on CCS7 Vol. 16, 4-51
Networked ACD on PRA Vol. 16, 4-66
Networked EBS Display Vol. 13, 4-171
Night Service - Flexible Vol. 12, 1-80
Night Service Trunk Answer from Any Station - Fixed Vol. 12, 1-87
Night Service Trunk Answer From Any Station - TAFAS Vol. 12, 1-95
Non-Data Link Console Call Extension Vol. 13, 1-212
Off-hook Queuing Vol. 13, 1-221
OHQ, CBQ for OUTWATS VFG Vol. 13, 1-229
Optional Answer Supervision from Attendant Queue Vol. 12, 1-104
Originating/Terminating Line Select (TLS) Vol. 14, 3-198
Outgoing Restriction Control Vol. 15, 1-228
Override ACR for CFU Vol. 12, 1-110
Patch Source Inclusion I Vol. 12, 1-119
Patch Source Inclusion II Vol. 12, 1-130
Peg Counts on LDNs on Attendant Consoles Vol. 12, 2-50
Pending Order File (POF) Enhancements Vol. 15, 1-249
Permanent Hold (500/2500 Sets) Vol. 12, 1-141
Personal Call Screening of Call Forwarding Vol. 13, 1-241
PF Robustness - Call Forwarding per Key (CFK) Vol. 15, 4-106
PF Robustness - Call Pickup Separate Keys Compatibility Vol. 15, 4-121
Position Busy Vol. 12, 1-149
Power Feature Audit Trails Vol. 15, 3-89
Power Features Enhancements I Vol. 15, 3-102
Power Features Installer Application Vol. 15, 3-140
Preset Conference Vol. 13, 1-249
Preset Conference (Large) Vol. 15, 1-262
Query Functional Station Grouping Vol. 12, 1-157
Queuing OMs per Route Vol. 13, 1-274

Remove Timeout between Authcode/Secondary Dial Tone Vol. 13, 1-277
Repeated Alert for MBS Vol. 14, 3-209
Ring Again Vol. 12, 1-162
Ring Again Cancellation Timer Vol. 12, 1-170
Ring Again on Hunt Groups Vol. 12, 1-176
Ring Reminder Off/On Option per Line Vol. 13, 1-306
RLT with No Third Party Interaction Vol. 14, 1-7
Second and Third Delay Announcements Vol. 12, 1-187
Secrecy Vol. 12, 1-194
Semi-restricted Incoming Lines Call Intercept Vol. 12, 1-202
Separate SMDR Output Files by Cust Group Vol. 13, 1-310
Series completion Vol. 15, 1-279
Series completion enhancements Vol. 15, 1-286
Service Analysis for IBN Vol. 15, 1-292
SERVORD cleanup for MBS Vol. 14, 2-405
Setting Attendant Recall Timers to Zero Vol. 12, 1-208
Short Hunt on MBS Vol. 14, 2-418
Simplified Dialing Vol. 12, 1-212
SLE on MBS/MADN Vol. 13, 2-94
SLE on MDC Vol. 13, 2-123
SMDR Derived from Bellcore AMA Record Vol. 15, 1-294
SMDR for ONI Lines Vol. 13, 1-320
Special Intercept Through Service Orders Vol. 12, 1-236
Specific Key Ringback on Ring Again Request on EBS Vol. 14, 3-216
Speed Calling Group - Long List Vol. 12, 1-243
Speed Calling Individual - Short List Vol. 12, 1-250
Station Activated DND with Feature Active Reminder Vol. 12, 1-258
Station Activation of CFB/CFD Vol. 13, 1-328
Station Camp On for Meridian Business Set Vol. 15, 2-45
Station Message Detail Recording Vol. 13, 1-339
Station Message Waiting Vol. 13, 1-349
Station Specific Auth Codes Vol. 13, 1-358
Station Specific Authcode - CDC Enhancements Vol. 13, 1-367
Storing of 24 Dialed Digits Vol. 12, 1-265
Stuttered Dial Tone for Message Waiting Vol. 13, 1-373
Supervisory Console (Basic) Vol. 13, 1-379
Suspend and Restore Remote Call Forward Lines Vol. 13, 1-382
Teen Service on MDC Vol. 13, 2-132
Terminating Billing Option Vol. 15, 1-303
TGB/TAC Access thru Special Keys Vol. 12, 1-268
Through Dialing Vol. 12, 1-273
Time of Day NCOS Vol. 15, 1-313
Time of Day Routing Vol. 15, 1-325
Trouble Key on IBN Console Vol. 12, 1-277
Trunk Busy Verify Tone Vol. 12, 1-285
TVDS - II Vol. 15, 1-335
Two-Way Splitting Vol. 12, 1-292
UCD Night Service Invocation Enhancements Vol. 12, 1-296
UCD on EBS and UCD SD Point Vol. 15, 1-345
UCD Queue Status Lamp Vol. 12, 1-302
Uniform Call Distribution (to 500/2500 Telephone Sets) Vol. 12, 1-315
Uniform Call Distribution from Queue Vol. 12, 1-325
Variable Length/Same Leading Digit(s) Translation Vol. 12, 1-331
Variable Speed Call Access Code Vol. 12, 1-343
Variable Stutter Dial Tone Vol. 13, 1-387
Variable Types of Outpulsing on Same Call Vol. 12, 1-351
VFG INWATS Ovfl Totals to AMA Tape - IBN Vol. 13, 1-393
VFG Look Ahead Vol. 13, 1-400
VFG Usage Data Vol. 13, 1-405
Virtual Access to Private Networks Vol. 14, 1-87
VMX Interface Vol. 15, 1-363
Wild Card Key Vol. 12, 1-355

activation
ACD Interaction with IVR Vol. 16, 2-31
ICM Message Waiting Activation/Deactivation Vol. 16, 9-53
ADDSGRP, table
datafilling Vol. 16, 13-22
ADJNODE, table
datafilling Vol. 16, 4-53
routing Vol. 16, 13-11
ALTSCHED, table
datafilling Vol. 14, 2-373
AMAOPTS, table
datafilling Vol. 13, 1-146, Vol. 13, 1-395
ANNMEMS, table
announcements Vol. 16, 11-7, Vol. 16, 12-7, Vol. 16, 13-8
datafilling Vol. 11, 2-174
announcements
ACD Vol. 16, 11-5, Vol. 16, 12-5, Vol. 16, 13-5
ANNS, table
announcements Vol. 16, 11-6, Vol. 16, 12-7, Vol. 16, 13-7
datafilling Vol. 11, 2-173
ATTCONS, table
datafilling Vol. 11, 2-643, Vol. 12, 2-18, Vol. 12, 2-44
AUDIO, table
announcements Vol. 16, 11-6, Vol. 16, 12-7, Vol. 16, 13-7
datafilling Vol. 11, 2-176, Vol. 11, 2-182, Vol. 11, 2-194, Vol. 11, 2-355, Vol. 11, 2-427, Vol. 12, 1-104, Vol. 12, 1-188, Vol. 14, 2-32, Vol. 14, 2-202, Vol. 14, 3-171, Vol. 15, 2-47, Vol. 15, 5-31, Vol. 16, 2-173, Vol. 16, 4-39
AUTHCDE, table
datafilling Vol. 12, 3-413, Vol. 13, 1-115, Vol. 13, 1-360, Vol. 13, 1-368
AUTHPART, table
datafilling Vol. 12, 3-412, Vol. 13, 1-110, Vol. 13, 1-115, Vol. 13, 1-359
Automatic Call Distribution
datafilling Vol. 16, 1-46
functional groups Vol. 16, 1-62
signaling Vol. 16, 1-37
translations Vol. 16, 1-1

B

BANDSETS, table
datafilling Vol. 15, 1-162
BGDATA, table
datafilling Vol. 13, 3-38, Vol. 13, 3-72, Vol. 13, 3-86, Vol. 13, 3-117, Vol. 13, 3-125, Vol. 16, 3-58
BGLOCN, table
datafilling Vol. 13, 3-49, Vol. 13, 3-90
billing
2-Way Digital FX Trunk - Business Services Vol. 11, 2-4
3-Way Conference/Transfer Vol. 11, 2-12
3WC Dial 0 for 608 Cord Board Vol. 11, 2-19
3WC/Call Transfer for UCD Vol. 11, 2-29
3WC/CXR to 2500 Set Call Waiting Interactions Vol. 11, 2-32
6 Port Conference Circuit Use Control Vol. 11, 2-36
A/C Activate/Deactivate of CFU/CFI Vol. 12, 3-7
AC to IBNISUP Interworking Vol. 12, 3-13
Access Feature Grouping Vol. 15, 4-33
Access to CCSA (BV0420) Vol. 11, 2-45
Access to CO from PBX Vol. 11, 2-51
Access to ETN Vol. 11, 2-60
Access to Special Service Facilities Vol. 11, 2-65
Account Codes Vol. 12, 3-20
ACD - Mgmt Rep 2 Way Data Stream Vol. 16, 2-71
ACD Access Feature Grouping Vol. 16, 2-4
ACD CompuCALL Vol. 16, 3-38
ACD Night Service Call Queue Clearing Vol. 16, 2-83
ACD Nodal Treatment in NACD Vol. 16, 4-5
ACD on 2500 Set Vol. 16, 2-97
ACD Remote Load Management I Vol. 16, 2-111
ACD Supergroup Vol. 16, 4-20
ACD-Load Management III Vol. 16, 2-43
AC-Extended Calls to CFB/CFD Vol. 11, 2-40
ANI Information in SMDR Output Vol. 12, 3-29

ARS - (Basic) (BV0506) Vol. 12, 3-86
Attendant Call Detail Entry Vol. 12, 3-43
Attendant Call Park Recall Timer Vol. 11, 2-74
Attendant Call Selection Vol. 11, 2-78
Attendant Camp-On Vol. 11, 2-84
Attendant Conference (Maximum Six Conferees) Vol. 11, 2-93
Attendant Console Call Hold Recall Vol. 11, 2-103
Attendant Console Display Vol. 11, 2-113
Attendant Console End-to-End Signalling Vol. 11, 2-118
Attendant Console OM on an Individual Console Basis Vol. 12, 2-18
Attendant Control of Trunk Group Access Vol. 11, 2-124
Attendant Control of VFG Vol. 12, 3-53
Attendant Display of Queued Calls by ICI Key Vol. 11, 2-131
Attendant Locked Loop Operation Vol. 11, 2-139
Attendant Message Waiting Vol. 12, 3-65
Attendant Release Upon Completion of Dialing Vol. 11, 2-142
Attendant Set Up Conference
10 or More Conferees Vol. 12, 3-74
Attendant Speed Calling Vol. 11, 2-147
Attendant to Recorded Announcement Vol. 11, 2-153
Attendant to UCD Vol. 11, 2-158
Attendant Transfer Vol. 11, 2-167
Attendent - Auto Dial Vol. 11, 2-70
Audio Input on Incoming Calls in Queue (BV0602) Vol. 11, 2-172
Audio Interlude (BC0946) Vol. 11, 2-182
Audio Table Expansion (AD0822) Vol. 11, 2-193
Authcode for MDR Vol. 14, 4-13
Authorization Codes (BV0494) Vol. 12, 3-82
Automatic Intercept System (AIS) Enhancement Vol. 11, 2-201
Automatic Line Vol. 11, 2-217
Automatic Line and MADN Vol. 14, 2-5
Automatic Recall Vol. 11, 2-222
Base ACD Vol. 16, 2-166
Bellcore AMA Enhanced Automatic Route Selection Translations Vol. 14, 4-23
Blind Transfer Recall Vol. 11, 2-236
Blind Transfer Recall Identification Vol. 11, 2-250
Block Calling Name/Number Delivery Blocking per Call Vol. 15, 7-9
BOC AMA Call Code 032 Vol. 14, 4-31
BR0747 CCSA VFG Option Vol. 15, 1-3
Business Set Busy Indicator Vol. 14, 2-14
Business Set Call Waiting Originate Vol. 14, 2-20
Business Set Dial Call Waiting Vol. 14, 2-31
Busy Verification - Stations Vol. 11, 2-263
Busy Verification - Trunks Vol. 11, 2-274
Call Back Queuing (Basic) Vol. 12, 3-96
Call Forcing Tone Optionality Vol. 16, 2-214
Call Forward All Calls Vol. 11, 2-288
Call Forward Busy Vol. 11, 2-298
Call Forward Busy - Inhibit Make & Inhibit Line Busy Vol. 12, 3-110
Call Forward Busy/Don't Answer - Internal/External Vol. 12, 3-126
Call Forward Do Not Answer and Call Waiting Interaction Vol. 11, 2-328, Vol. 12, 3-143
Call Forward No Answer Vol. 11, 2-312
Call Forward Prevention Enhancements Vol. 12, 3-161
Call Forward Timed Vol. 12, 3-188
Call Forward/Automatic Dial Display Vol. 14, 2-39
Call Forwarding of Call Waiting Calls Vol. 12, 3-197
Call Hold Vol. 11, 2-341
Call Park Vol. 11, 2-354
Call Park Recall Identification Vol. 14, 3-9
Call Pickup Vol. 11, 2-368
Call Pickup Transparency Vol. 11, 2-374
Call Request Call Processing Enhancements Vol. 11, 2-377, Vol. 12, 3-202
Call Request Retrieve/Key Short Hunt Interaction Control Vol. 12, 3-205
Call Transfer Enhancement Vol. 11, 2-383
Call Waiting Vol. 11, 2-397
Call Waiting - Originating Vol. 11, 2-416
Call waiting 1A transparency issues Vol. 12, 3-212

Call Waiting for 3-Way Calling
Vol. 11, 2-405
Calling Name Delivery on MADN (CNAMD on MADN) Vol. 13, 2-5
Calling Name Inspect Key Vol. 15, 2-22
Calling Name/Number Delivery Blocking (CNNB) Vol. 15, 7-26
Calling Number and NCOS Display on Attendant Console Vol. 13, 4-26
Camp On with Music Vol. 11, 2-426
CCSA Line Option Vol. 14, 4-35
CFBL Inhibit Line Busy/Inhibit MB Enhancements Vol. 12, 3-225
CFD from Hunt Group Station Vol. 11, 2-434
CFD Interaction with Three-Way Calling
Vol. 11, 2-443
CFGDA for Hunt Groups Vol. 11, 2-449
CFW for MADN Secondary Members
Vol. 14, 3-20
Change EBS Features During Talking State
Vol. 12, 3-231
Change Line Class Codes via SERVORD
Vol. 12, 3-257
Class of Service Restrictions Vol. 11, 2-456
CLASS on MBS/MADN Base Vol. 13, 2-17
CLASS on MDC Base Vol. 13, 2-48
Class on MVP Base Vol. 13, 2-74
CLEN for EBS Vol. 12, 3-277
Code Call Access Vol. 11, 2-462
Code Calling - Line Termination
Vol. 11, 2-471
Code Restriction Vol. 11, 2-478
CompuCALLEnhancements-Screen-Assisted Telephony Vol. 16, 3-134
CompuCALL Integration with ICCM
Vol. 16, 7-16
CompuCALL Transport Enhancements
Vol. 16, 5-18
Conference Join Vol. 11, 2-489
Control of Multiple Call Forwarding
Vol. 12, 3-288
COT Enhancement Vol. 13, 2-82
CPU Datafill Enhancements Vol. 11, 2-495
Customer Administration of Data
Vol. 14, 4-42
Customer Dialed Account Recording (CDAR) Vol. 14, 4-60
Customer Group Transparency
Vol. 11, 2-501
Customer Network Data Changes
Vol. 14, 4-75
Customer Screening at the Trunk Test Position Vol. 14, 4-90
Customer Service Change Via SERVORD
Vol. 14, 4-100
Cut Through Dialing Vol. 12, 3-299
Cut Thru and Thru Dialing Interaction
Vol. 12, 3-304
Cut Thru Dialing for IBN Lines & A/C
Vol. 12, 3-312
Denied Incoming Vol. 11, 2-510
Dial - Call Waiting Vol. 11, 2-523
Dialtone Passback via PX Trunks for MDC
Vol. 12, 3-319
Dictation Access and Control (DTMF Only)
Vol. 11, 2-532
Direct Inward Dialing (DID) Vol. 14, 4-108
Direct Inward System Access (DISA)
Vol. 12, 3-330
Direct Outward Dialing (DOD)
Vol. 11, 2-537
Direct Station Selection/Busy Lamp Field for MBS Vol. 15, 3-15
Directed Call Park Vol. 11, 2-547
Directed Call Pickup - Barge In
Vol. 11, 2-556
Directed Call Pickup - Non Barge In
Vol. 11, 2-567
DISA
Invalid Authcode Treatment Option
Vol. 12, 3-340
DISA - Remove Auth Code Timeout
Vol. 12, 3-345
DISA Enhancements Vol. 12, 3-333
DISA Third Dial Tone Vol. 12, 3-351
Display Called About Number Vol. 16, 2-233
Distinctive and Ring Again Ringing
Vol. 11, 2-572
Distinctive Call Waiting Ringback
Vol. 12, 3-358
Distinctive Call Waiting Tones
Vol. 11, 2-577
Distinctive Ringing Vol. 11, 2-584

Distinctive Ringing Enhancements Vol. 11, 2-596
Do Not Disturb Vol. 12, 2-24
DT after CFW Cancel and Spd Call Programming Vol. 12, 3-371
DTMF Outpulsing on a Line Vol. 11, 2-613
Dynamic Measurements Vol. 12, 2-32
E911 Single Button Transfer Operation Vol. 15, 3-25
EAEO - IBN PIC Using SERVORD Vol. 12, 3-377
EBS as a Message Center Vol. 14, 2-44
EBS as a Message Center - Enhancements Vol. 14, 2-58
EBS Call Forwarding on a per Key Basis Vol. 14, 3-45
ECM/SCAI Support for Non-ACD - Ph 1 Vol. 16, 3-150
End to End Signalling via Speed Call Vol. 11, 2-625
Enhanced EBS Reason Display Vol. 14, 2-85
Enhanced Handling of ACD Re-Enqueued Calls Vol. 16, 2-255
Enhanced MADN Call Control Vol. 14, 3-79
Enhanced SERVORD II Vol. 12, 3-390
ERWT for Lines, Trunks for ARS, Call Back Queue Features Vol. 12, 3-397
ESN - Answer Supervision Generation Vol. 12, 3-405
ESN - Authorization Codes Vol. 12, 3-411
ESN - Call-Back Queuing Vol. 12, 3-426
ESN - Network Automatic Route Selection (TEHO and HEHO) Vol. 15, 1-9
ESN - Network Class of Service Vol. 15, 1-25
ESN - Network Information Signals Vol. 15, 1-33
ESN - Network Speed Call Vol. 15, 1-55
ESN - Off-hook Queuing Vol. 12, 3-435
Executive Message Service Enhancement - Multi EMW per DN Vol. 14, 2-93
Executive Right of Way Vol. 11, 2-632
Fast Transfer for Meridian Business Set Vol. 15, 3-36
Flexible Console Alerting Vol. 11, 2-642
Flexible Display Language Vol. 12, 2-39
Flexible Intercept Vol. 11, 2-649
Flexible Station Controlled Conference (500/2500 Sets) Vol. 12, 3-451
Forced Announcements for NACD Vol. 16, 4-36
Generalized Distinctive Ringing Vol. 11, 2-652
Group Intercom All Call Vol. 14, 3-98
Group Number Feature Control Vol. 13, 1-17
IBN - Optional Call Forward Links Vol. 13, 1-78
IBN & ESB Compatibility Vol. 13, 1-76
IBN Auth Codes for Alternate Route Selection (ARS) Vol. 13, 1-46
IBN Call Forward Enhancements Vol. 13, 1-52
IBN Call Forward Validation Vol. 11, 2-665
IBN Cancel Call Waiting Vol. 11, 2-670
IBN Class 5 INWATS Vol. 13, 1-57
IBN Class 5 Psuedo OUTWATS Vol. 13, 1-65
IBN Feature Activation OMs I Vol. 11, 2-678
IBN ISUP NETINFO Translations Vol. 13, 3-15
IBN LCC Compatibility with FRO Line Option Vol. 11, 2-685
IBN Outpulsing to POTS Trunks Vol. 11, 2-702
IBN Quantity Control (100 Lines) Vol. 11, 2-706
IBN Trunks with ISUP Signalling Vol. 13, 1-92
IBNRTE Table Capacity Increase Vol. 11, 2-708
ICM Configuration Management Vol. 16, 9-33
ICM Message Waiting Activation/Deactivation Vol. 16, 9-53
ICM TAPI Extensions Vol. 16, 9-74
ICM Three-Way Call Enhanced Status Reporting Vol. 16, 9-93
ICM Variable Wrap Reporting Vol. 16, 9-103
ICM Workqueue Re-Engineering Vol. 16, 9-110
IDDD via ARS Vol. 15, 1-128
Immediate Answer Reporting for IBN Vol. 11, 2-715

Immediate Notification of Priority Enqueued Calls Vol. 12, 2-46
Increase Auth Codes per Customer Group Vol. 13, 1-110
Increase in Number of IBN Customer Groups Vol. 11, 2-719
Increase Number of Equivalent DN Appearances for IBN Vol. 11, 2-725
Individual Page from GIC Vol. 14, 3-105
Interactive Display Menu on MBS Sets Vol. 15, 3-56
Interposition Calls and Transfers Vol. 11, 2-730
INWATS to Direct Inward System Access Vol. 13, 1-114
ISUP Shared Trunking Enhancement Vol. 13, 3-36
Killer Trunk Report Separation Vol. 15, 1-137
Last Number Redial (LNR) Vol. 12, 1-3
Last Number Redial from Set Vol. 14, 3-114
Lockout Vol. 12, 1-17
Loud Speaker & Radio Paging Access Vol. 12, 1-21
Loudspeaker Paging - Line Termination Vol. 12, 1-27
M5209 Introduction Vol. 14, 2-100
MACD Nodal Service Observing Vol. 16, 2-271
MACD PIN Configuration and Control Vol. 16, 2-285
MADN and Conference Interaction Vol. 12, 1-36
MADN Bridging - 3 Way Call Vol. 14, 3-120
MADN Cut-off on Disconnect (COD) Vol. 14, 3-131
MADN Ring Forward Vol. 14, 3-142
MADN Service Orders Vol. 14, 2-114
Make Set Busy Except GIC Vol. 14, 3-156
MAP Alarm Level Screening Vol. 15, 1-148
MAP Display for Attendant OM Vol. 12, 1-39
MBG Alternate Terminating Number Billing Vol. 13, 3-47
MBG Enabling of Feature Networking Vol. 13, 3-55
MBG Feature Networking Control Vol. 13, 3-60
MBG II - Support of IBN7 Trunk Features Vol. 13, 3-72
MBG III - Support of Private Numbering Plan Vol. 13, 3-80
MBG IV - Support of Network EMW Vol. 13, 3-116
MBG Redirection Enhancements for ISUP IBN Trunks Vol. 13, 4-37
MBS 30-Port Conference Vol. 12, 1-47
MBS Auto Answer Back Vol. 14, 2-132
MBS Automatic Dial Vol. 14, 2-140
MBS Automatic Line Vol. 14, 2-145
MBS Busy Override Vol. 14, 2-153
MBS Call Back Queuing Vol. 14, 2-167
MBS Call Forward All Calls Feature Key S/W Vol. 14, 2-182
MBS Call Park Vol. 14, 2-198
MBS Call Pickup Feature Key S/W Vol. 14, 2-213
MBS Call Waiting Vol. 14, 2-222
MBS Display Called Number Vol. 14, 2-228
MBS Display Calling Number Vol. 14, 2-236
MBS End to End Signalling Vol. 14, 2-242
MBS Feature Code Access Vol. 14, 2-246
MBS Feature Display Vol. 14, 2-253
MBS Group Intercom Vol. 14, 2-261
MBS Held Calls Vol. 14, 2-266
MBS II Templates Vol. 14, 2-121
MBS Individual Business Line Vol. 14, 2-272
MBS Intercom Vol. 14, 2-283
MBS Listen on Hold Vol. 14, 2-288
MBS MADN SCA/MCA (across Switch) Vol. 14, 2-293
MBS Make Set Busy Vol. 14, 2-301
MBS Malicious Call Hold Vol. 14, 2-311
MBS Message Waiting Vol. 13, 1-125
MBS Onhook Dialing Vol. 14, 2-315
MBS Power Feature - Name Programming Vol. 15, 3-69
MBS Privacy Release (across Switch) Vol. 14, 2-320
MBS Query Time Key Vol. 14, 2-330
MBS Ring-Again Feature Key S/W Vol. 14, 2-336

MBS Speed Calling Feature Key S/W
Vol. 14, 2-346
MBS Three-Way Calling Transfer
Vol. 14, 2-358
MDC AFG Add Option Vol. 15, 4-80
MDC Circuit Test Enhancement
Vol. 14, 2-368
MDC Copy Feature Set Vol. 15, 4-65
MDC CUSTENG Robustness Vol. 12, 1-52
MDC DSS/BLF Set Based Vol. 15, 5-17
MDC Enhanced WATS Vol. 15, 1-155
MDC MBS Interactive Display Vol. 15, 4-92
MDC Single Button Transfer Vol. 15, 3-78
MDC Single Line Queue Vol. 15, 5-30
MDC to 10-digit routing Vol. 15, 10-8
MDC to Universal routing Vol. 15, 11-9
MDR Data in the AMA Stream
Vol. 15, 1-202
Meet Me Page Vol. 13, 1-169
Meet-Me Conference Vol. 12, 1-62
Meet-Me Conference Feature Expansion
Vol. 13, 1-155
Message Service - Leave Message
Vol. 14, 2-384
Message Service - List Management
Vol. 14, 2-402
Message Waiting Lamp Update - Link Phone Vol. 13, 1-177
Multi-location Business Group I
Vol. 13, 3-124
Multipilot Directory Numbers on MLH Group Vol. 15, 1-220
Multiple Position Hunt with Queue
Vol. 13, 1-194
Music on Hold for EBS Vol. 14, 3-170
MVP Dial Plan Vol. 12, 1-71
Name Display for MADN Members
Vol. 14, 3-187
NAS Features Optionality Vol. 13, 4-40
Network Access Registers (NARS)
Vol. 15, 6-19
Network Attendant Control Vol. 13, 4-47
Network Attendant Recall Vol. 13, 4-51
Network Camp-On-II Vol. 13, 4-55
Network Dial Plan Display Vol. 13, 4-60
Network Display Enhancement Vol. 13, 4-80
Network Feature Access Restriction
Vol. 15, 8-10
Network Intelligent Call Management
Vol. 16, 7-31
Network Message Waiting Indicator (MWI)
Vol. 13, 4-88
Network Name Display Vol. 13, 4-107
Network Name Display for Attendant Consoles Vol. 13, 4-136
Network Wide Ring Again Vol. 13, 4-160
Networked ACD on CCS7 Vol. 16, 4-51
Networked ACD on PRA Vol. 16, 4-66
Networked EBS Display Vol. 13, 4-171
Night Service - Flexible Vol. 12, 1-80
Night Service Trunk Answer from Any Station - Fixed Vol. 12, 1-87
Night Service Trunk Answer From Any Station - TAFAS Vol. 12, 1-95
Non-Data Link Console Call Extension
Vol. 13, 1-215
Off-hook Queuing Vol. 13, 1-221
OHQ, CBQ for OUTWATS VFG
Vol. 13, 1-229
Optional Answer Supervision from Attendant Queue Vol. 12, 1-104
Originating/Terminating Line Select (TLS)
Vol. 14, 3-198
Outgoing Restriction Control Vol. 15, 1-233
Override ACR for CFU Vol. 12, 1-111
Patch Source Inclusion I Vol. 12, 1-119
Patch Source Inclusion II Vol. 12, 1-130
Peg Counts on LDNs on Attendant Consoles
Vol. 12, 2-50
Pending Order File (POF) Enhancements
Vol. 15, 1-249
Permanent Hold (500/2500 Sets)
Vol. 12, 1-141
Personal Call Screening of Call Forwarding
Vol. 13, 1-242
PF Robustness - Call Forwarding per Key (CFK) Vol. 15, 4-109
PF Robustness - Call Pickup Separate Keys Compatibility Vol. 15, 4-135
Position Busy Vol. 12, 1-149
Power Feature Audit Trails Vol. 15, 3-91
Power Features Enhancements I
Vol. 15, 3-121

Power Features Installer Application Vol. 15, 3-141
Preset Conference Vol. 13, 1-249
Preset Conference (Large) Vol. 15, 1-262
Query Functional Station Grouping Vol. 12, 1-157
Queueing OMs per Route Vol. 13, 1-274
Remove Timeout between Authcode/Secondary Dial Tone Vol. 13, 1-277
Repeated Alert for MBS Vol. 14, 3-209
Ring Again Vol. 12, 1-163
Ring Again Cancellation Timer Vol. 12, 1-170
Ring Again on Hunt Groups Vol. 12, 1-177
Ring Reminder Off/On Option per Line Vol. 13, 1-306
RLT with No Third Party Interaction Vol. 14, 1-7
Second and Third Delay Announcements Vol. 12, 1-187
Secrecy Vol. 12, 1-194
Semi-restricted Incoming Lines Call Intercept Vol. 12, 1-202
Separate SMDR Output Files by Cust Group Vol. 13, 1-310
Series completion Vol. 15, 1-279
SERVORD cleanup for MBS Vol. 14, 2-406
Setting Attendant Recall Timers to Zero Vol. 12, 1-208
Short Hunt on MBS Vol. 14, 2-418
Simplified Dialing Vol. 12, 1-212
SLE on MBS/MADN Vol. 13, 2-94
SLE on MDC Vol. 13, 2-123
SMDR Derived from Bellcore AMA Record Vol. 15, 1-294
SMDR for ONI Lines Vol. 13, 1-320
Special Intercept Through Service Orders Vol. 12, 1-236
Specific Key Ringback on Ring Again Request on EBS Vol. 14, 3-216
Speed Calling Group - Long List Vol. 12, 1-243
Speed Calling Individual - Short List Vol. 12, 1-250
Station Activated DND with Feature Active Reminder Vol. 12, 1-258
Station Activation of CFB/CFD Vol. 13, 1-330
Station Camp On for Meridian Business Set Vol. 15, 2-46
Station Message Detail Recording Vol. 13, 1-339
Station Message Waiting Vol. 13, 1-349
Station Specific Auth Codes Vol. 13, 1-358
Station Specific Authcode - CDC Enhancements Vol. 13, 1-367
Storing of 24 Dialed Digits Vol. 12, 1-265
Stuttered Dial Tone for Message Waiting Vol. 13, 1-373
Supervisory Console (Basic) Vol. 13, 1-379
Suspend and Restore Remote Call Forward Lines Vol. 13, 1-382
Teen Service on MDC Vol. 13, 2-132
Terminating Billing Option Vol. 15, 1-304
TGB/TAC Access thru Special Keys Vol. 12, 1-269
Through Dialing Vol. 12, 1-274
Time of Day NCOS Vol. 15, 1-314
Time of Day Routing Vol. 15, 1-325
Trouble Key on IBN Console Vol. 12, 1-277
Trunk Busy Verify Tone Vol. 12, 1-287
TVDS - II Vol. 15, 1-335
Two-Way Splitting Vol. 12, 1-293
UCD Night Service Invocation Enhancements Vol. 12, 1-297
UCD on EBS and UCD SD Point Vol. 15, 1-347
UCD Queue Status Lamp Vol. 12, 1-302
Uniform Call Distribution (to 500/2500 Telephone Sets) Vol. 12, 1-315
Uniform Call Distribution from Queue Vol. 12, 1-326
Variable Length/Same Leading Digit(s) Translation Vol. 12, 1-331
Variable Speed Call Access Code Vol. 12, 1-343
Variable Stutter Dial Tone Vol. 13, 1-387
Variable Types of Outpulsing on Same Call Vol. 12, 1-351
VFG INWATS Ovfl Totals to AMA Tape - IBN Vol. 13, 1-394
VFG Look Ahead Vol. 13, 1-401

VFG Usage Data Vol. 13, 1-405
Virtual Access to Private Networks Vol. 14, 1-88
VMX Interface Vol. 15, 1-366
Wild Card Key Vol. 12, 1-355
Business Set Busy Indicator, table
datafilling Vol. 14, 2-14

C

C7GTT, table
datafilling Vol. 13, 4-98
C7GTTYPE, table
datafilling Vol. 13, 4-97
C7LINK, table
translations Vol. 16, 12-11
C7LKSET, table
translations Vol. 16, 12-11
C7LOCSSN, table
datafilling Vol. 13, 4-100, Vol. 13, 4-162
translations Vol. 16, 12-12
C7NETSSN, table
datafilling Vol. 13, 4-99, Vol. 13, 4-161
translations Vol. 16, 12-12
C7NETWRK, table
translations Vol. 16, 12-10
C7RPLSSN, table
datafilling Vol. 13, 4-101
C7RSSCRN, table
datafilling Vol. 13, 4-101
C7RTESET, table
translations Vol. 16, 12-11
C7TRKMEM, table
datafilling Vol. 13, 1-105
translations Vol. 16, 12-13
CAARRMTC, table
routing Vol. 16, 13-10
Call flow Vol. 16, 13-27
call flow Vol. 16, 11-18, Vol. 16, 12-24
CALLCHR (incoming), table
datafilling Vol. 15, 1-50
CDCDNS, table
datafilling Vol. 14, 4-47, Vol. 14, 4-79
CDCLENS, table
datafilling Vol. 14, 4-45, Vol. 14, 4-77, Vol. 14, 4-103
CDCLOGON, table
datafilling Vol. 14, 4-46, Vol. 14, 4-78, Vol. 14, 4-104, Vol. 15, 1-251
CDCOPTS, table
datafilling Vol. 14, 4-48, Vol. 14, 4-80
CFFPDPLN, table
datafilling Vol. 12, 3-162
CFFPTYPE, table
datafilling Vol. 12, 3-167
CFX, table
datafilling Vol. 14, 3-48
CGNSCRN, table
datafilling Vol. 14, 1-95
CLLI, table
announcements Vol. 16, 11-6, Vol. 16, 12-6, Vol. 16, 13-6
datafilling Vol. 11, 2-203, Vol. 11, 2-263, Vol. 11, 2-275, Vol. 11, 2-417, Vol. 11, 2-471, Vol. 11, 2-557, Vol. 11, 2-578, Vol. 11, 2-579, Vol. 11, 2-633, Vol. 12, 1-28, Vol. 12, 3-399, Vol. 12, 3-405, Vol. 12, 3-436, Vol. 13, 1-97, Vol. 13, 1-222, Vol. 13, 1-250, Vol. 13, 2-134, Vol. 14, 2-154, Vol. 15, 1-263
CLLIMTCE, table
datafilling Vol. 14, 4-91, Vol. 15, 1-148
CLLIMTCE.DIAGDATA, table
datafilling Vol. 14, 2-372
CMDS, table
datafilling Vol. 16, 2-44
CODEBLK, table
datafilling Vol. 11, 2-481, Vol. 15, 1-130
CODECALL, table
datafilling Vol. 11, 2-464, Vol. 11, 2-473
COSDATA (outgoing and incoming), table
datafilling Vol. 15, 1-47
COSDATA, table
datafilling Vol. 13, 3-21, Vol. 15, 1-19, Vol. 15, 1-27, Vol. 15, 1-62
COSMAP (outgoing and incoming), table
datafilling Vol. 15, 1-38
COSMAP, table
datafilling Vol. 13, 3-18, Vol. 15, 1-20, Vol. 15, 1-26, Vol. 15, 1-57
CRSFMT, table
datafilling Vol. 13, 1-311
CRSMAP, table
datafilling Vol. 13, 1-316

CUSTACD, table
datafilling Vol. 16, 2-286
CUSTANN, table
datafilling Vol. 12, 1-237
CUSTCONS , table
datafilling Vol. 11, 2-185
CUSTCONS, table
datafilling Vol. 11, 2-41, Vol. 11, 2-75, Vol. 11, 2-85, Vol. 11, 2-103, Vol. 11, 2-142, Vol. 11, 2-223, Vol. 11, 2-428, Vol. 12, 1-17, Vol. 12, 1-194, Vol. 12, 1-208, Vol. 12, 1-326, Vol. 12, 3-306
CUSTENG, table
contents Vol. 16, 11-4, Vol. 16, 12-4, Vol. 16, 13-4
datafilling Vol. 11, 2-37, Vol. 11, 2-329, Vol. 11, 2-502, Vol. 12, 1-52, Vol. 12, 1-63, Vol. 12, 3-144, Vol. 12, 3-453, Vol. 13, 1-156, Vol. 13, 1-251, Vol. 13, 4-27, Vol. 15, 1-210, Vol. 15, 1-265, Vol. 15, 1-370, Vol. 15, 6-26
CUSTFAM, table
datafilling Vol. 11, 2-501
CUSTHEAD, table
contents Vol. 16, 11-4, Vol. 16, 12-4, Vol. 16, 13-5
datafilling Vol. 11, 2-61, Vol. 11, 2-94, Vol. 11, 2-177, Vol. 11, 2-184, Vol. 11, 2-357, Vol. 12, 1-73, Vol. 12, 1-105, Vol. 12, 3-20, Vol. 12, 3-43, Vol. 12, 3-74, Vol. 12, 3-300, Vol. 12, 3-305, Vol. 12, 3-313, Vol. 12, 3-346, Vol. 12, 3-398, Vol. 12, 3-414, Vol. 12, 3-436, Vol. 12, 3-452, Vol. 13, 1-46, Vol. 13, 1-116, Vol. 13, 1-140, Vol. 13, 1-157, Vol. 13, 1-170, Vol. 13, 1-278, Vol. 13, 1-360, Vol. 13, 1-401, Vol. 13, 2-54, Vol. 14, 1-98, Vol. 14, 4-102, Vol. 15, 1-316
CUSTNTWK, table
datafilling Vol. 12, 1-172, Vol. 13, 2-52, Vol. 13, 3-22, Vol. 13, 3-60, Vol. 13, 4-29, Vol. 13, 4-41, Vol. 13, 4-64, Vol. 13, 4-109, Vol. 13, 4-111, Vol. 13, 4-138, Vol. 13, 4-164, Vol. 15, 4-93, Vol. 16, 3-103, Vol. 16, 11-12
routing Vol. 16, 13-15
translations Vol. 16, 12-13
customer groups
defining Vol. 16, 11-2, Vol. 16, 12-2, Vol. 16, 13-3
CUSTSMDR, table
datafilling Vol. 11, 2-703, Vol. 12, 3-406, Vol. 13, 1-106, Vol. 13, 1-316, Vol. 13, 1-322, Vol. 13, 1-341, Vol. 15, 1-211, Vol. 15, 1-295
CUSTSTN (option DRING), table
datafilling Vol. 14, 3-13
CUSTSTN (option READSISP), table
datafilling Vol. 14, 3-11
CUSTSTN, table
contents Vol. 16, 11-4, Vol. 16, 12-5, Vol. 16, 13-5
datafilling Vol. 11, 2-12, Vol. 11, 2-187, Vol. 11, 2-240, Vol. 11, 2-252, Vol. 11, 2-315, Vol. 11, 2-344, Vol. 11, 2-345, Vol. 11, 2-358, Vol. 11, 2-386, Vol. 11, 2-418, Vol. 11, 2-436, Vol. 11, 2-524, Vol. 11, 2-558, Vol. 11, 2-586, Vol. 11, 2-599, Vol. 11, 2-626, Vol. 11, 2-654, Vol. 11, 2-666, Vol. 12, 1-96, Vol. 12, 1-120, Vol. 12, 1-144, Vol. 12, 1-145, Vol. 12, 1-170, Vol. 12, 1-202, Vol. 12, 1-259, Vol. 12, 1-346, Vol. 12, 2-25, Vol. 12, 3-97, Vol. 12, 3-197, Vol. 12, 3-206, Vol. 12, 3-289, Vol. 12, 3-427, Vol. 13, 1-53, Vol. 13, 1-78, Vol. 13, 1-242, Vol. 13, 2-56, Vol. 13, 4-167, Vol. 13, 4-171, Vol. 14, 1-8, Vol. 14, 2-33, Vol. 14, 2-59, Vol. 14, 2-88, Vol. 14, 2-171, Vol. 14, 2-183, Vol. 14, 2-229, Vol. 14, 2-237, Vol. 14, 2-254, Vol. 14, 2-302, Vol. 14, 2-337, Vol. 14, 3-105, Vol. 14, 3-172, Vol. 14, 3-188, Vol. 14, 3-217, Vol. 15, 1-234, Vol. 15, 1-347, Vol. 15, 2-23, Vol. 15, 2-50, Vol. 15, 7-13, Vol. 15, 8-11, Vol. 16, 2-100

D

datafill
ICM Message Waiting Activation/Deactivation Vol. 16, 9-54, Vol. 16, 9-56
datafill related
ACD Interaction with IVR Vol. 16, 2-32
datafill sequence
2-Way Digital FX Trunk - Business Services Vol. 11, 2-5
3-Way Conference/Transfer Vol. 11, 2-12
3WC Dial 0 for 608 Cord Board Vol. 11, 2-20
3WC/Call Transfer for UCD Vol. 11, 2-29

3WC/CXR to 2500 Set Call Waiting Interactions Vol. 11, 2-32
6 Port Conference Circuit Use Control Vol. 11, 2-37
A/C Activate/Deactivate of CFU/CFI Vol. 12, 3-7
AC to IBNISUP Interworking Vol. 12, 3-13
Access Feature Grouping Vol. 15, 4-33
Access to CCSA (BV0420) Vol. 11, 2-45
Access to CO from PBX Vol. 11, 2-51
Access to ETN Vol. 11, 2-61
Access to Special Service Facilities Vol. 11, 2-65
Account Codes Vol. 12, 3-20
ACD - Mgmt Rep 2 Way Data Stream Vol. 16, 2-72
ACD Access Feature Grouping Vol. 16, 2-5
ACD Interaction with IVR Vol. 16, 2-32
ACD Night Service Call Queue Clearing Vol. 16, 2-84
ACD Nodal Treatment in NACD Vol. 16, 4-6
ACD on 2500 Set Vol. 16, 2-97
ACD Remote Load Management I Vol. 16, 2-112
ACD Supergroup Vol. 16, 4-21
ACD-Load Management III Vol. 16, 2-43
AC-Extended Calls to CFB/CFD Vol. 11, 2-41
ANI Information in SMDR Output Vol. 12, 3-31
ARS - (Basic) (BV0506) Vol. 12, 3-87
Attendant Call Detail Entry Vol. 12, 3-43
Attendant Call Park Recall Timer Vol. 11, 2-74
Attendant Call Selection Vol. 11, 2-78
Attendant Camp-On Vol. 11, 2-85
Attendant Conference (Maximum Six Conferees) Vol. 11, 2-94
Attendant Console Call Hold Recall Vol. 11, 2-103
Attendant Console Display Vol. 11, 2-113
Attendant Console End-to-End Signalling Vol. 11, 2-119
Attendant Console OM on an Individual Console Basis Vol. 12, 2-18
Attendant Control of Trunk Group Access Vol. 11, 2-125
Attendant Control of VFG Vol. 12, 3-53
Attendant Display of Queued Calls by ICI Key Vol. 11, 2-132
Attendant Message Waiting Vol. 12, 3-66
Attendant Release Upon Completion of Dialing Vol. 11, 2-142
Attendant Set Up Conference
10 or More Conferees Vol. 12, 3-74
Attendant Speed Calling Vol. 11, 2-148
Attendant to Recorded Announcement Vol. 11, 2-153
Attendant to UCD Vol. 11, 2-159
Attendant Transfer Vol. 11, 2-167
Attendent - Auto Dial Vol. 11, 2-70
Audio Input on Incoming Calls in Queue (BV0602) Vol. 11, 2-173
Audio Interlude (BC0946) Vol. 11, 2-182
Audio Table Expansion (AD0822) Vol. 11, 2-194
Authcode for MDR Vol. 14, 4-15
Authorization Codes (BV0494) Vol. 12, 3-82
Automatic Intercept System (AIS) Enhancement Vol. 11, 2-202
Automatic Line Vol. 11, 2-217
Automatic Line and MADN Vol. 14, 2-5
Automatic Recall Vol. 11, 2-223
Base ACD Vol. 16, 2-171
Bellcore AMA Enhanced Automatic Route Selection Translations Vol. 14, 4-24
Blind Transfer Recall Vol. 11, 2-240
Blind Transfer Recall Identification Vol. 11, 2-250
BOC AMA Call Code 032 Vol. 14, 4-31
BR0747 CCSA VFG Option Vol. 15, 1-3
Business Set Call Waiting Originate Vol. 14, 2-21
Business Set Dial Call Waiting Vol. 14, 2-31
Busy Verification - Stations Vol. 11, 2-263
Busy Verification - Trunks Vol. 11, 2-275
Call Back Queuing (Basic) Vol. 12, 3-97
Call Forcing Tone Optionality Vol. 16, 2-214
Call Forward All Calls Vol. 11, 2-289
Call Forward Busy Vol. 11, 2-298
Call Forward Busy - Inhibit Make & Inhibit Line Busy Vol. 12, 3-110
Call Forward Busy/Don't Answer - Internal/External Vol. 12, 3-128

Call Forward Do Not Answer and Call Waiting Interaction Vol. 11, 2-329, Vol. 12, 3-144
Call Forward Indication Vol. 15, 9-7
Call Forward No Answer Vol. 11, 2-313
Call Forward Prevention Enhancements Vol. 12, 3-161
Call Forward Timed Vol. 12, 3-188
Call Forward/Automatic Dial Display Vol. 14, 2-40
Call Forwarding of Call Waiting Calls Vol. 12, 3-197
Call Hold Vol. 11, 2-342
Call Park Vol. 11, 2-355
Call Park Recall Identification Vol. 14, 3-9
Call Pickup Vol. 11, 2-369
Call Pickup Transparency Vol. 11, 2-374
Call Request Call Processing Enhancements Vol. 11, 2-377, Vol. 12, 3-202
Call Request Retrieve/Key Short Hunt Interaction Control Vol. 12, 3-206
Call Transfer Enhancement Vol. 11, 2-386
Call Waiting Vol. 11, 2-398
Call Waiting - Originating Vol. 11, 2-417
Call waiting 1A transparency issues Vol. 12, 3-212
Call Waiting for 3-Way Calling Vol. 11, 2-406
Calling Name Delivery on MADN (CNAMD on MADN) Vol. 13, 2-6
Calling Name Inspect Key Vol. 15, 2-22
Calling Name/Number Delivery Blocking (CNNB) Vol. 15, 7-26
Calling Number and NCOS Display on Attendant Console Vol. 13, 4-27
Camp On with Music Vol. 11, 2-427
CCSA Line Option Vol. 14, 4-35
CFBL Inhibit Line Busy/Inhibit MB Enhancements Vol. 12, 3-225
CFD from Hunt Group Station Vol. 11, 2-435
CFD Interaction with Three-Way Calling Vol. 11, 2-444
CFGDA for Hunt Groups Vol. 11, 2-449
CFW for MADN Secondary Members Vol. 14, 3-21
Change EBS Features During Talking State Vol. 12, 3-231
Change Line Class Codes via SERVORD Vol. 12, 3-257
Class of Service Restrictions Vol. 11, 2-457
CLASS on MBS/MADN Base Vol. 13, 2-17
CLASS on MDC Base Vol. 13, 2-48
Class on MVP Base Vol. 13, 2-74
CLEN for EBS Vol. 12, 3-278
Code Call Access Vol. 11, 2-463
Code Calling - Line Termination Vol. 11, 2-471
Code Restriction Vol. 11, 2-479
CompuCALLEnhancements-Screen-Assisted Telephony Vol. 16, 3-135
CompuCALL Integration with ICCM Vol. 16, 7-18
CompuCALL Transport Enhancements Vol. 16, 5-18
Conference Join Vol. 11, 2-490
Control of Multiple Call Forwarding Vol. 12, 3-289
COT Enhancement Vol. 13, 2-84
CPU Datafill Enhancements Vol. 11, 2-495
Customer Administration of Data Vol. 14, 4-43
Customer Dialed Account Recording (CDAR) Vol. 14, 4-61
Customer Group Transparency Vol. 11, 2-501
Customer Network Data Changes Vol. 14, 4-76
Customer Screening at the Trunk Test Position Vol. 14, 4-91
Customer Service Change Via SERVORD Vol. 14, 4-101
Cut Through Dialing Vol. 12, 3-299
Cut Thru and Thru Dialing Interaction Vol. 12, 3-305
Cut Thru Dialing for IBN Lines & A/C Vol. 12, 3-313
Denied Incoming Vol. 11, 2-511
Dial - Call Waiting Vol. 11, 2-523
Dialtone Passback via PX Trunks for MDC Vol. 12, 3-319
Dictation Access and Control (DTMF Only) Vol. 11, 2-533
Direct Inward Dialing (DID) Vol. 14, 4-108

Direct Inward System Access (DISA) Vol. 12, 3-330
Direct Outward Dialing (DOD) Vol. 11, 2-538
Direct Station Selection/Busy Lamp Field for MBS Vol. 15, 3-16
Directed Call Park Vol. 11, 2-548
Directed Call Pickup - Barge In Vol. 11, 2-557
Directed Call Pickup - Non Barge In Vol. 11, 2-567
DISA
Invalid Authcode Treatment Option Vol. 12, 3-341
DISA - Remove Auth Code Timeout Vol. 12, 3-346
DISA Enhancements Vol. 12, 3-333
DISA Third Dial Tone Vol. 12, 3-352
Display Called About Number Vol. 16, 2-234
Distinctive and Ring Again Ringing Vol. 11, 2-572
Distinctive Call Waiting Ringback Vol. 12, 3-359
Distinctive Call Waiting Tones Vol. 11, 2-578
Distinctive Ringing Vol. 11, 2-584
Distinctive Ringing Enhancements Vol. 11, 2-597
Do Not Disturb Vol. 12, 2-24
DT after CFW Cancel and Spd Call Programming Vol. 12, 3-371
DTMF Outpulsing on a Line Vol. 11, 2-615
Dynamic Measurements Vol. 12, 2-33
E911 Single Button Transfer Operation Vol. 15, 3-25
EAEO - IBN PIC Using SERVORD Vol. 12, 3-378
EBS as a Message Center Vol. 14, 2-45
EBS as a Message Center - Enhancements Vol. 14, 2-59
EBS Call Forwarding on a per Key Basis Vol. 14, 3-45
ECM/SCAI Support for Non-ACD - Ph 1 Vol. 16, 3-150
End to End Signalling via Speed Call Vol. 11, 2-626
Enhanced EBS Reason Display Vol. 14, 2-86
Enhanced Handling of ACD Re-Enqueued Calls Vol. 16, 2-255
Enhanced MADN Call Control Vol. 14, 3-80
Enhanced SERVORD II Vol. 12, 3-390
ERWT for Lines, Trunks for ARS, Call Back Queue Features Vol. 12, 3-398
ESN - Answer Supervision Generation Vol. 12, 3-405
ESN - Authorization Codes Vol. 12, 3-412
ESN - Call-Back Queuing Vol. 12, 3-426
ESN - Network Automatic Route Selection (TEHO and HEHO) Vol. 15, 1-10
ESN - Network Class of Service Vol. 15, 1-26
ESN - Network Information Signals Vol. 15, 1-34
ESN - Network Speed Call Vol. 15, 1-56
ESN - Off-hook Queuing Vol. 12, 3-435
Executive Message Service Enhancement - Multi EMW per DN Vol. 14, 2-93
Executive Right of Way Vol. 11, 2-633
Fast Transfer for Meridian Business Set Vol. 15, 3-37
Flexible Console Alerting Vol. 11, 2-643
Flexible Display Language Vol. 12, 2-39
Flexible Intercept Vol. 11, 2-649
Flexible Station Controlled Conference (500/2500 Sets) Vol. 12, 3-452
Forced Announcements for NACD Vol. 16, 4-36
Generalized Distinctive Ringing Vol. 11, 2-653
Group Intercom All Call Vol. 14, 3-98
Group Number Feature Control Vol. 13, 1-18
IBN - Optional Call Forward Links Vol. 13, 1-78
IBN & ESB Compatibility Vol. 13, 1-76
IBN Auth Codes for Alternate Route Selection (ARS) Vol. 13, 1-46
IBN Call Forward Enhancements Vol. 13, 1-53
IBN Call Forward Validation Vol. 11, 2-666
IBN Cancel Call Waiting Vol. 11, 2-670
IBN Class 5 INWATS Vol. 13, 1-58
IBN Class 5 Psuedo OUTWATS Vol. 13, 1-66
IBN Feature Activation OMs I Vol. 11, 2-679

IBN ISUP NETINFO Translations Vol. 13, 3-16
IBN LCC Compatibility with FRO Line Option Vol. 11, 2-685
IBN Outpulsing to POTS Trunks Vol. 11, 2-703
IBN Quantity Control (100 Lines) Vol. 11, 2-706
IBN Trunks with ISUP Signalling Vol. 13, 1-96
IBNRTE Table Capacity Increase Vol. 11, 2-709
ICM Configuration Management Vol. 16, 9-33
ICM Message Waiting Activation/Deactivation Vol. 16, 9-54
ICM TAPI Extensions Vol. 16, 9-75
ICM Three-Way Call Enhanced Status Reporting Vol. 16, 9-93
ICM Variable Wrap Reporting Vol. 16, 9-103
ICM Workqueue Re-Engineering Vol. 16, 9-110
IDDD via ARS Vol. 15, 1-128
Immediate Answer Reporting for IBN Vol. 11, 2-716
Immediate Notification of Priority Enqueued Calls Vol. 12, 2-46
Increase Auth Codes per Customer Group Vol. 13, 1-110
Increase in Number of IBN Customer Groups Vol. 11, 2-719
Increase Number of Equivalent DN Appearances for IBN Vol. 11, 2-725
Individual Page from GIC Vol. 14, 3-105
Interactive Display Menu on MBS Sets Vol. 15, 3-56
Interposition Calls and Transfers Vol. 11, 2-730
INWATS to Direct Inward System Access Vol. 13, 1-114
ISUP Shared Trunking Enhancement Vol. 13, 3-37
Killer Trunk Report Separation Vol. 15, 1-138
Last Number Redial (LNR) Vol. 12, 1-4
Last Number Redial from Set Vol. 14, 3-114
Lockout Vol. 12, 1-17
Loud Speaker & Radio Paging Access Vol. 12, 1-22
Loudspeaker Paging - Line Termination Vol. 12, 1-28
M5209 Introduction Vol. 14, 2-100
MACD Nodal Service Observing Vol. 16, 2-271
MACD PIN Configuration and Control Vol. 16, 2-286
MADN and Conference Interaction Vol. 12, 1-36
MADN Bridging - 3 Way Call Vol. 14, 3-120
MADN Cut-off on Disconnect (COD) Vol. 14, 3-131
MADN Ring Forward Vol. 14, 3-143
MADN Service Orders Vol. 14, 2-115
Make Set Busy Except GIC Vol. 14, 3-156
MAP Alarm Level Screening Vol. 15, 1-148
MAP Display for Attendant OM Vol. 12, 1-39
MBG Alternate Terminating Number Billing Vol. 13, 3-49
MBG Enabling of Feature Networking Vol. 13, 3-55
MBG Feature Networking Control Vol. 13, 3-60
MBG II - Support of IBN7 Trunk Features Vol. 13, 3-72
MBG III - Support of Private Numbering Plan Vol. 13, 3-85
MBG IV - Support of Network EMW Vol. 13, 3-116
MBG Redirection Enhancements for ISUP IBN Trunks Vol. 13, 4-38
MBS 30-Port Conference Vol. 12, 1-48
MBS Auto Answer Back Vol. 14, 2-133
MBS Automatic Dial Vol. 14, 2-140
MBS Automatic Line Vol. 14, 2-145
MBS Busy Override Vol. 14, 2-154
MBS Call Back Queuing Vol. 14, 2-168
MBS Call Forward All Calls Feature Key S/W Vol. 14, 2-183
MBS Call Park Vol. 14, 2-199
MBS Call Pickup Feature Key S/W Vol. 14, 2-214
MBS Call Waiting Vol. 14, 2-223
MBS Display Called Number Vol. 14, 2-229

MBS Display Calling Number Vol. 14, 2-237
MBS End to End Signalling Vol. 14, 2-242
MBS Feature Code Access Vol. 14, 2-247
MBS Feature Display Vol. 14, 2-254
MBS Group Intercom Vol. 14, 2-262
MBS Held Calls Vol. 14, 2-266
MBS II Templates Vol. 14, 2-121
MBS Individual Business Line Vol. 14, 2-273
MBS Intercom Vol. 14, 2-284
MBS Listen on Hold Vol. 14, 2-288
MBS MADN SCA/MCA (across Switch) Vol. 14, 2-294
MBS Make Set Busy Vol. 14, 2-302
MBS Malicious Call Hold Vol. 14, 2-312
MBS Message Waiting Vol. 13, 1-126
MBS Onhook Dialing Vol. 14, 2-315
MBS Power Feature - Name Programming Vol. 15, 3-70
MBS Privacy Release (across Switch) Vol. 14, 2-320
MBS Query Time Key Vol. 14, 2-330
MBS Ring-Again Feature Key S/W Vol. 14, 2-337
MBS Speed Calling Feature Key S/W Vol. 14, 2-347
MBS Three-Way Calling Transfer Vol. 14, 2-359
MDC AFG Add Option Vol. 15, 4-81
MDC Circuit Test Enhancement Vol. 14, 2-370
MDC Copy Feature Set Vol. 15, 4-65
MDC CUSTENG Robustness Vol. 12, 1-52
MDC DSS/BLF Set Based Vol. 15, 5-18
MDC Enhanced WATS Vol. 15, 1-156
MDC MBS Interactive Display Vol. 15, 4-93
MDC Single Button Transfer Vol. 15, 3-79
MDC Single Line Queue Vol. 15, 5-30
MDC to 10-digit routing Vol. 15, 10-9
MDC to Universal routing Vol. 15, 11-10
MDC Variable CDAR Vol. 13, 1-137
MDR Data in the AMA Stream Vol. 15, 1-210
Meet Me Page Vol. 13, 1-170
Meet-Me Conference Vol. 12, 1-63
Meet-Me Conference Feature Expansion Vol. 13, 1-156
Message Service - Leave Message Vol. 14, 2-384
Message Waiting Indicator (MWI) Vol. 13, 4-94
Message Waiting Lamp Update - Link Phone Vol. 13, 1-178
Multi-location Business Group I Vol. 13, 3-125
Multipilot Directory Numbers on MLH Group Vol. 15, 1-221
Multiple Position Hunt with Queue Vol. 13, 1-195
Music on Hold for EBS Vol. 14, 3-171
MVP Dial Plan Vol. 12, 1-71
Name Display for MADN Members Vol. 14, 3-187
NAS Features Optionality Vol. 13, 4-41
Network Access Registers (NARS) Vol. 15, 6-20
Network Attendant Control Vol. 13, 4-47
Network Attendant Recall Vol. 13, 4-51
Network Dial Plan Display Vol. 13, 4-61
Network Display Enhancement Vol. 13, 4-80
Network Feature Access Restriction Vol. 15, 8-11
Network Intelligent Call Management Vol. 16, 7-32
Network Name Display Vol. 13, 4-108
Network Name Display for Attendant Consoles Vol. 13, 4-136
Network Wide Ring Again Vol. 13, 4-160
Networked ACD on CCS7 Vol. 16, 4-52
Networked ACD on PRA Vol. 16, 4-66
Networked EBS Display Vol. 13, 4-171
Night Service - Flexible Vol. 12, 1-81
Night Service Trunk Answer from Any Station - Fixed Vol. 12, 1-88
Night Service Trunk Answer From Any Station - TAFAS Vol. 12, 1-96
Non-Data Link Console Call Extension Vol. 13, 1-215
Off-hook Queuing Vol. 13, 1-222
OHQ, CBQ for OUTWATS VFG Vol. 13, 1-229
Optional Answer Supervision from Attendant Queue Vol. 12, 1-104

Originating/Terminating Line Select (TLS) Vol. 14, 3-199
Outgoing Restriction Control Vol. 15, 1-233
Override ACR for CFU Vol. 12, 1-111
Patch Source Inclusion I Vol. 12, 1-120
Patch Source Inclusion II Vol. 12, 1-131
Peg Counts on LDNs on Attendant Consoles Vol. 12, 2-50
Pending Order File (POF) Enhancements Vol. 15, 1-250
Permanent Hold (500/2500 Sets) Vol. 12, 1-142
Personal Call Screening of Call Forwarding Vol. 13, 1-242
PF Robustness - Call Forwarding per Key (CFK) Vol. 15, 4-110
PF Robustness - Call Pickup Separate Keys Compatibility Vol. 15, 4-135
Position Busy Vol. 12, 1-150
Power Feature Audit Trails Vol. 15, 3-91
Power Features Enhancements I Vol. 15, 3-121
Power Features Installer Application Vol. 15, 3-141
Preset Conference Vol. 13, 1-250
Preset Conference (Large) Vol. 15, 1-263
Query Functional Station Grouping Vol. 12, 1-157
Queueing OMs per Route Vol. 13, 1-274
Remove Timeout between Authcode/Secondary Dial Tone Vol. 13, 1-278
Repeated Alert for MBS Vol. 14, 3-209
Ring Again Vol. 12, 1-163
Ring Again Cancellation Timer Vol. 12, 1-170
Ring Again on Hunt Groups Vol. 12, 1-177
Ring Reminder Off/On Option per Line Vol. 13, 1-306
RLT with No Third Party Interaction Vol. 14, 1-8
Second and Third Delay Announcements Vol. 12, 1-188
Secrecy Vol. 12, 1-194
Semi-restricted Incoming Lines Call Intercept Vol. 12, 1-202
Separate SMDR Output Files by Cust Group Vol. 13, 1-311
Series completion Vol. 15, 1-280
Series completion enhancements Vol. 15, 1-286
Service Analysis for IBN Vol. 15, 1-292
SERVORD cleanup for MBS Vol. 14, 2-406
Setting Attendant Recall Timers to Zero Vol. 12, 1-208
Short Hunt on MBS Vol. 14, 2-419
Simplified Dialing Vol. 12, 1-213
SLE on MBS/MADN Vol. 13, 2-95
SLE on MDC Vol. 13, 2-123
SMDR Derived from Bellcore AMA Record Vol. 15, 1-295
SMDR for ONI Lines Vol. 13, 1-322
Special Intercept Through Service Orders Vol. 12, 1-237
Specific Key Ringback on Ring Again Request on EBS Vol. 14, 3-217
Speed Calling Group - Long List Vol. 12, 1-243
Speed Calling Individual - Short List Vol. 12, 1-251
Station Activated DND with Feature Active Reminder Vol. 12, 1-259
Station Activation of CFB/CFD Vol. 13, 1-331
Station Camp On for Meridian Business Set Vol. 15, 2-47
Station Message Detail Recording Vol. 13, 1-341
Station Message Waiting Vol. 13, 1-349
Station Specific Auth Codes Vol. 13, 1-358
Station Specific Authcode - CDC Enhancements Vol. 13, 1-367
Storing of 24 Dialed Digits Vol. 12, 1-265
Stuttered Dial Tone for Message Waiting Vol. 13, 1-374
Supervisory Console (Basic) Vol. 13, 1-379
Suspend and Restore Remote Call Forward Lines Vol. 13, 1-382
Teen Service on MDC Vol. 13, 2-132
Terminating Billing Option Vol. 15, 1-305
TGB/TAC Access thru Special Keys Vol. 12, 1-269
Through Dialing Vol. 12, 1-274
Time of Day NCOS Vol. 15, 1-314
Time of Day Routing Vol. 15, 1-325

Trouble Key on IBN Console Vol. 12, 1-278
Trunk Busy Verify Tone Vol. 12, 1-287
TVDS - II Vol. 15, 1-336
Two-Way Splitting Vol. 12, 1-293
UCD Night Service Invocation Enhancements Vol. 12, 1-297
UCD on EBS and UCD SD Point Vol. 15, 1-347
UCD Queue Status Lamp Vol. 12, 1-303
Uniform Call Distribution (to 500/2500 Telephone Sets) Vol. 12, 1-316
Uniform Call Distribution from Queue Vol. 12, 1-326
Variable Length/Same Leading Digit(s) Translation Vol. 12, 1-331
Variable Speed Call Access Code Vol. 12, 1-344
Variable Stutter Dial Tone Vol. 13, 1-387
Variable Types of Outpulsing on Same Call Vol. 12, 1-352
VFG INWATS Ovfl Totals to AMA Tape - IBN Vol. 13, 1-395
VFG Look Ahead Vol. 13, 1-401
VFG Usage Data Vol. 13, 1-405
Virtual Access to Private Networks Vol. 14, 1-91
VMX Interface Vol. 15, 1-367
Wild Card Key Vol. 12, 1-355
DATAOWNR, table
datafilling Vol. 14, 4-49, Vol. 14, 4-81
DAYOWEEK, table
datafilling Vol. 15, 1-319, Vol. 15, 1-329
DAYOYEAR, table
datafilling Vol. 15, 1-320, Vol. 15, 1-330
DAYTYPES, table
datafilling Vol. 15, 1-317, Vol. 15, 1-327
deactivating
2-Way Digital FX Trunk - Business Services Vol. 11, 2-4
3-Way Conference/Transfer Vol. 11, 2-11
3WC Dial 0 for 608 Cord Board Vol. 11, 2-19
3WC/Call Transfer for UCD Vol. 11, 2-28
3WC/CXR to 2500 Set Call Waiting Interactions Vol. 11, 2-32
6 Port Conference Circuit Use Control Vol. 11, 2-36
A/C Activate/Deactivate of CFU/CFI Vol. 12, 3-6
AC to IBNISUP Interworking Vol. 12, 3-13
Access Feature Grouping Vol. 15, 4-32
Access to CCSA (BV0420) Vol. 11, 2-44
Access to CO from PBX Vol. 11, 2-51
Access to ETN Vol. 11, 2-60
Access to Special Service Facilities Vol. 11, 2-65
ACD - Mgmt Rep 2 Way Data Stream Vol. 16, 2-70
ACD Access Feature Grouping Vol. 16, 2-4
ACD CompuCALL Vol. 16, 3-38
ACD Night Service Call Queue Clearing Vol. 16, 2-82
ACD Nodal Treatment in NACD Vol. 16, 4-5
ACD on 2500 Set Vol. 16, 2-93
ACD Remote Load Management I Vol. 16, 2-111
ACD Supergroup Vol. 16, 4-20
ACD-Load Management III Vol. 16, 2-43
AC-Extended Calls to CFB/CFD Vol. 11, 2-40
ANI Information in SMDR Output Vol. 12, 3-28
ARS - (Basic) (BV0506) Vol. 12, 3-86
Attendant Call Detail Entry Vol. 12, 3-41
Attendant Call Park Recall Timer Vol. 11, 2-74
Attendant Call Selection Vol. 11, 2-78
Attendant Camp-On Vol. 11, 2-84
Attendant Conference (Maximum Six Conferees) Vol. 11, 2-93
Attendant Console Call Hold Recall Vol. 11, 2-102
Attendant Console Display Vol. 11, 2-113
Attendant Console End-to-End Signalling Vol. 11, 2-117
Attendant Console OM on an Individual Console Basis Vol. 12, 2-17
Attendant Control of Trunk Group Access Vol. 11, 2-124
Attendant Control of VFG Vol. 12, 3-51
Attendant Display of Queued Calls by ICI Key Vol. 11, 2-130
Attendant Locked Loop Operation Vol. 11, 2-138

Attendant Message Waiting Vol. 12, 3-63
Attendant Release Upon Completion of Dialing Vol. 11, 2-141
Attendant Set Up Conference
10 or More Conferees Vol. 12, 3-73
Attendant Speed Calling Vol. 11, 2-146
Attendant to Recorded Announcement
Vol. 11, 2-153
Attendant to UCD Vol. 11, 2-158
Attendant Transfer Vol. 11, 2-166
Attendent - Auto Dial Vol. 11, 2-68
Audio Input on Incoming Calls in Queue (BV0602) Vol. 11, 2-172
Audio Interlude (BC0946) Vol. 11, 2-181
Audio Table Expansion (AD0822)
Vol. 11, 2-193
Authcode for MDR Vol. 14, 4-13
Authorization Codes (BV0494) Vol. 12, 3-82
Automatic Intercept System (AIS) Enhancement Vol. 11, 2-201
Automatic Line Vol. 11, 2-216
Automatic Line and MADN Vol. 14, 2-5
Automatic Recall Vol. 11, 2-222
Base ACD Vol. 16, 2-158
Bellcore AMA Enhanced Automatic Route Selection Translations Vol. 14, 4-22
Blind Transfer Recall Vol. 11, 2-236
Blind Transfer Recall Identification
Vol. 11, 2-249
Block Calling Name/Number Delivery Blocking per Call Vol. 15, 7-9
BOC AMA Call Code 032 Vol. 14, 4-31
BR0747 CCSA VFG Option Vol. 15, 1-3
Business Set Busy Indicator Vol. 14, 2-11
Business Set Call Waiting Originate
Vol. 14, 2-20
Business Set Dial Call Waiting Vol. 14, 2-30
Busy Verification - Stations Vol. 11, 2-262
Busy Verification - Trunks Vol. 11, 2-274
Call Back Queuing (Basic) Vol. 12, 3-96
Call Forcing Tone Optionality Vol. 16, 2-214
Call Forward All Calls Vol. 11, 2-288
Call Forward Busy Vol. 11, 2-298
Call Forward Busy - Inhibit Make & Inhibit Line Busy Vol. 12, 3-109
Call Forward Busy/Don't Answer - Internal/External Vol. 12, 3-124
Call Forward Do Not Answer and Call Waiting Interaction Vol. 11, 2-328, Vol. 12, 3-143
Call Forward No Answer Vol. 11, 2-312
Call Forward Prevention Enhancements
Vol. 12, 3-161
Call Forward Timed Vol. 12, 3-188
Call Forward/Automatic Dial Display
Vol. 14, 2-39
Call Forwarding of Call Waiting Calls
Vol. 12, 3-197
Call Hold Vol. 11, 2-340
Call Park Vol. 11, 2-353
Call Park Recall Identification Vol. 14, 3-9
Call Pickup Vol. 11, 2-367
Call Pickup Transparency Vol. 11, 2-374
Call Request Call Processing Enhancements
Vol. 11, 2-377, Vol. 12, 3-202
Call Request Retrieve/Key Short Hunt Interaction Control Vol. 12, 3-205
Call Transfer Enhancement Vol. 11, 2-383
Call Waiting Vol. 11, 2-397
Call Waiting - Originating Vol. 11, 2-416
Call waiting 1A transparency issues
Vol. 12, 3-212
Call Waiting for 3-Way Calling
Vol. 11, 2-405
Calling Name Delivery on MADN (CNAMD on MADN) Vol. 13, 2-5
Calling Name Inspect Key Vol. 15, 2-6
Calling Name/Number Delivery Blocking (CNNB) Vol. 15, 7-25
Calling Number and NCOS Display on Attendant Console Vol. 13, 4-26
Camp On with Music Vol. 11, 2-426
CCSA Line Option Vol. 14, 4-35
CFBL Inhibit Line Busy/Inhibit MB Enhancements Vol. 12, 3-225
CFD from Hunt Group Station Vol. 11, 2-434
CFD Interaction with Three-Way Calling
Vol. 11, 2-443
CFGDA for Hunt Groups Vol. 11, 2-448
CFW for MADN Secondary Members
Vol. 14, 3-19
Change EBS Features During Talking State
Vol. 12, 3-230
Change Line Class Codes via SERVORD
Vol. 12, 3-257

Class of Service Restrictions Vol. 11, 2-456
CLASS on MBS/MADN Base Vol. 13, 2-17
CLASS on MDC Base Vol. 13, 2-48
Class on MVP Base Vol. 13, 2-74
CLEN for EBS Vol. 12, 3-277
Code Call Access Vol. 11, 2-462
Code Calling - Line Termination
Vol. 11, 2-470
Code Restriction Vol. 11, 2-478
CompuCALLEnhancements-Screen-Assisted Telephony Vol. 16, 3-134
CompuCALL Integration with ICCM
Vol. 16, 7-16
CompuCALL Transport Enhancements
Vol. 16, 5-18
Conference Join Vol. 11, 2-487
Control of Multiple Call Forwarding
Vol. 12, 3-288
COT Enhancement Vol. 13, 2-81
CPU Datafill Enhancements Vol. 11, 2-494
Customer Administration of Data
Vol. 14, 4-42
Customer Dialed Account Recording (CDAR) Vol. 14, 4-59
Customer Group Transparency
Vol. 11, 2-501
Customer Network Data Changes
Vol. 14, 4-75
Customer Screening at the Trunk Test Position Vol. 14, 4-90
Customer Service Change Via SERVORD
Vol. 14, 4-100
Cut Through Dialing Vol. 12, 3-299
Cut Thru and Thru Dialing Interaction
Vol. 12, 3-304
Cut Thru Dialing for IBN Lines & A/C
Vol. 12, 3-312
Denied Incoming Vol. 11, 2-510
Dial - Call Waiting Vol. 11, 2-522
Dialtone Passback via PX Trunks for MDC
Vol. 12, 3-319
Dictation Access and Control (DTMF Only)
Vol. 11, 2-532
Direct Inward Dialing (DID) Vol. 14, 4-108
Direct Inward System Access (DISA)
Vol. 12, 3-329
Direct Outward Dialing (DOD)
Vol. 11, 2-537
Direct Station Selection/Busy Lamp Field for MBS Vol. 15, 3-5
Directed Call Park Vol. 11, 2-545
Directed Call Pickup - Barge In
Vol. 11, 2-556
Directed Call Pickup - Non Barge In
Vol. 11, 2-566
DISA
Invalid Authcode Treatment Option
Vol. 12, 3-340
DISA - Remove Auth Code Timeout
Vol. 12, 3-345
DISA Enhancements Vol. 12, 3-333
DISA Third Dial Tone Vol. 12, 3-351
Display Called About Number Vol. 16, 2-233
Distinctive and Ring Again Ringing
Vol. 11, 2-571
Distinctive Call Waiting Ringback
Vol. 12, 3-358
Distinctive Call Waiting Tones
Vol. 11, 2-577
Distinctive Ringing Vol. 11, 2-584
Distinctive Ringing Enhancements
Vol. 11, 2-596
Do Not Disturb Vol. 12, 2-24
DT after CFW Cancel and Spd Call Programming Vol. 12, 3-371
DTMF Outpulsing on a Line Vol. 11, 2-612
Dynamic Measurements Vol. 12, 2-32
E911 Single Button Transfer Operation
Vol. 15, 3-22
EAEO - IBN PIC Using SERVORD
Vol. 12, 3-376
EBS as a Message Center Vol. 14, 2-44
EBS as a Message Center - Enhancements
Vol. 14, 2-52
EBS Call Forwarding on a per Key Basis
Vol. 14, 3-40
ECM/SCAI Support for Non-ACD - Ph 1
Vol. 16, 3-150
Enhanced EBS Reason Display Vol. 14, 2-85
Enhanced Handling of ACD Re-Enqueued Calls Vol. 16, 2-255
Enhanced MADN Call Control Vol. 14, 3-79
Enhanced SERVORD II Vol. 12, 3-389

ERWT for Lines, Trunks for ARS, Call Back Queue Features Vol. 12, 3-397
ESN - Answer Supervision Generation Vol. 12, 3-404
ESN - Authorization Codes Vol. 12, 3-411
ESN - Call-Back Queuing Vol. 12, 3-424
ESN - Network Automatic Route Selection (TEHO and HEHO) Vol. 15, 1-9
ESN - Network Class of Service Vol. 15, 1-25
ESN - Network Information Signals Vol. 15, 1-33
ESN - Network Speed Call Vol. 15, 1-55
ESN - Off-hook Queuing Vol. 12, 3-435
Executive Message Service Enhancement - Multi EMW per DN Vol. 14, 2-93
Executive Right of Way Vol. 11, 2-632
Fast Transfer for Meridian Business Set Vol. 15, 3-33
Flexible Console Alerting Vol. 11, 2-641
Flexible Display Language Vol. 12, 2-38
Flexible Intercept Vol. 11, 2-649
Flexible Station Controlled Conference (500/2500 Sets) Vol. 12, 3-448
Forced Announcements for NACD Vol. 16, 4-35
Generalized Distinctive Ringing Vol. 11, 2-652
Group Intercom All Call Vol. 14, 3-96
Group Number Feature Control Vol. 13, 1-6
IBN - Optional Call Forward Links Vol. 13, 1-78
IBN & ESB Compatibility Vol. 13, 1-76
IBN Auth Codes for Alternate Route Selection (ARS) Vol. 13, 1-46
IBN Call Forward Enhancements Vol. 13, 1-52
IBN Call Forward Validation Vol. 11, 2-661
IBN Cancel Call Waiting Vol. 11, 2-670
IBN Class 5 INWATS Vol. 13, 1-57
IBN Class 5 Psuedo OUTWATS Vol. 13, 1-65
IBN Feature Activation OMs I Vol. 11, 2-678
IBN ISUP NETINFO Translations Vol. 13, 3-15
IBN LCC Compatibility with FRO Line Option Vol. 11, 2-685
IBN Outpulsing to POTS Trunks Vol. 11, 2-702
IBN Quantity Control (100 Lines) Vol. 11, 2-706
IBN Trunks with ISUP Signalling Vol. 13, 1-92
IBNRTE Table Capacity Increase Vol. 11, 2-708
ICM Configuration Management Vol. 16, 9-33
ICM Variable Wrap Reporting Vol. 16, 9-103
IDDD via ARS Vol. 15, 1-128
Immediate Answer Reporting for IBN Vol. 11, 2-715
Immediate Notification of Priority Enqueued Calls Vol. 12, 2-45
Increase Auth Codes per Customer Group Vol. 13, 1-109
Increase in Number of IBN Customer Groups Vol. 11, 2-719
Increase Number of Equivalent DN Appearances for IBN Vol. 11, 2-724
Individual Page from GIC Vol. 14, 3-105
Interactive Display Menu on MBS Sets Vol. 15, 3-53
Interposition Calls and Transfers Vol. 11, 2-729
INWATS to Direct Inward System Access Vol. 13, 1-113
ISUP Shared Trunking Enhancement Vol. 13, 3-36
Killer Trunk Report Separation Vol. 15, 1-135
Last Number Redial (LNR) Vol. 12, 1-3
Last Number Redial from Set Vol. 14, 3-114
Lockout Vol. 12, 1-16
Loud Speaker & Radio Paging Access Vol. 12, 1-21
Loudspeaker Paging - Line Termination Vol. 12, 1-27
M5209 Introduction Vol. 14, 2-100
MACD Nodal Service Observing Vol. 16, 2-270
MACD PIN Configuration and Control Vol. 16, 2-284
MADN and Conference Interaction Vol. 12, 1-35

MADN Bridging - 3 Way Call Vol. 14, 3-119
MADN Cut-off on Disconnect (COD) Vol. 14, 3-131
MADN Ring Forward Vol. 14, 3-141
MADN Service Orders Vol. 14, 2-114
Make Set Busy Except GIC Vol. 14, 3-155
MAP Alarm Level Screening Vol. 15, 1-147
MAP Display for Attendant OM Vol. 12, 1-37
MBG Alternate Terminating Number Billing Vol. 13, 3-47
MBG Enabling of Feature Networking Vol. 13, 3-54
MBG Feature Networking Control Vol. 13, 3-59
MBG II - Support of IBN7 Trunk Features Vol. 13, 3-72
MBG III - Support of Private Numbering Plan Vol. 13, 3-80
MBG IV - Support of Network EMW Vol. 13, 3-116
MBG Redirection Enhancements for ISUP IBN Trunks Vol. 13, 4-37
MBS 30-Port Conference Vol. 12, 1-44
MBS Auto Answer Back Vol. 14, 2-132
MBS Automatic Dial Vol. 14, 2-140
MBS Automatic Line Vol. 14, 2-145
MBS Busy Override Vol. 14, 2-152
MBS Call Back Queuing Vol. 14, 2-167
MBS Call Forward All Calls Feature Key S/W Vol. 14, 2-182
MBS Call Park Vol. 14, 2-197
MBS Call Pickup Feature Key S/W Vol. 14, 2-213
MBS Call Waiting Vol. 14, 2-222
MBS Display Called Number Vol. 14, 2-228
MBS Display Calling Number Vol. 14, 2-236
MBS End to End Signalling Vol. 14, 2-242
MBS Feature Code Access Vol. 14, 2-246
MBS Feature Display Vol. 14, 2-253
MBS Group Intercom Vol. 14, 2-261
MBS Held Calls Vol. 14, 2-266
MBS II Templates Vol. 14, 2-121
MBS Individual Business Line Vol. 14, 2-272
MBS Intercom Vol. 14, 2-283
MBS Listen on Hold Vol. 14, 2-288
MBS MADN SCA/MCA (across Switch) Vol. 14, 2-293
MBS Make Set Busy Vol. 14, 2-301
MBS Malicious Call Hold Vol. 14, 2-311
MBS Message Waiting Vol. 13, 1-125
MBS Onhook Dialing Vol. 14, 2-315
MBS Power Feature - Name Programming Vol. 15, 3-69
MBS Privacy Release (across Switch) Vol. 14, 2-319
MBS Query Time Key Vol. 14, 2-330
MBS Ring-Again Feature Key S/W Vol. 14, 2-336
MBS Speed Calling Feature Key S/W Vol. 14, 2-346
MBS Three-Way Calling Transfer Vol. 14, 2-357
MDC AFG Add Option Vol. 15, 4-80
MDC Circuit Test Enhancement Vol. 14, 2-368
MDC Copy Feature Set Vol. 15, 4-65
MDC CUSTENG Robustness Vol. 12, 1-52
MDC DSS/BLF Set Based Vol. 15, 5-10
MDC Enhanced WATS Vol. 15, 1-155
MDC MBS Interactive Display Vol. 15, 4-92
MDC Single Button Transfer Vol. 15, 3-76
MDC Single Line Queue Vol. 15, 5-29
MDC Variable CDAR Vol. 13, 1-136
MDR Data in the AMA Stream Vol. 15, 1-202
Meet Me Page Vol. 13, 1-166
Meet-Me Conference Vol. 12, 1-62, Vol. 13, 1-155
Message Service - Leave Message Vol. 14, 2-383
Message Service - List Management Vol. 14, 2-402
Message Waiting Lamp Update - Link Phone Vol. 13, 1-177
Multi-location Business Group I Vol. 13, 3-124
Multipilot Directory Numbers on MLH Group Vol. 15, 1-220
Multiple Position Hunt with Queue Vol. 13, 1-194
Music on Hold for EBS Vol. 14, 3-170
MVP Dial Plan Vol. 12, 1-71

Name Display for MADN Members Vol. 14, 3-187
NAS Features Optionality Vol. 13, 4-40
Network Access Registers (NARS) Vol. 15, 6-19
Network Attendant Control Vol. 13, 4-46
Network Attendant Recall Vol. 13, 4-51
Network Camp-On-II Vol. 13, 4-55
Network Dial Plan Display Vol. 13, 4-60
Network Display Enhancement Vol. 13, 4-80
Network Feature Access Restriction Vol. 15, 8-8
Network Intelligent Call Management Vol. 16, 7-31
Network Message Waiting Indicator (MWI) Vol. 13, 4-88
Network Name Display Vol. 13, 4-107
Network Name Display for Attendant Consoles Vol. 13, 4-136
Network Wide Ring Again Vol. 13, 4-157
Networked ACD on CCS7 Vol. 16, 4-51
Networked ACD on PRA Vol. 16, 4-66
Networked EBS Display Vol. 13, 4-171
Night Service - Flexible Vol. 12, 1-80
Night Service Trunk Answer from Any Station - Fixed Vol. 12, 1-87
Night Service Trunk Answer From Any Station - TAFAS Vol. 12, 1-95
Non-Data Link Console Call Extension Vol. 13, 1-212
Off-hook Queuing Vol. 13, 1-221
OHQ, CBQ for OUTWATS VFG Vol. 13, 1-229
Optional Answer Supervision from Attendant Queue Vol. 12, 1-104
Originating/Terminating Line Select (TLS) Vol. 14, 3-198
Outgoing Restriction Control Vol. 15, 1-228
Override ACR for CFU Vol. 12, 1-110
Patch Source Inclusion I Vol. 12, 1-119
Patch Source Inclusion II Vol. 12, 1-130
Peg Counts on LDNs on Attendant Consoles Vol. 12, 2-50
Pending Order File (POF) Enhancements Vol. 15, 1-249
Permanent Hold (500/2500 Sets) Vol. 12, 1-141
Personal Call Screening of Call Forwarding Vol. 13, 1-241
PF Robustness - Call Forwarding per Key (CFK) Vol. 15, 4-106
PF Robustness - Call Pickup Separate Keys Compatibility Vol. 15, 4-121
Position Busy Vol. 12, 1-149
Power Feature Audit Trails Vol. 15, 3-89
Power Features Enhancements I Vol. 15, 3-102
Power Features Installer Application Vol. 15, 3-140
Preset Conference Vol. 13, 1-249
Preset Conference (Large) Vol. 15, 1-262
Query Functional Station Grouping Vol. 12, 1-157
Queueing OMs per Route Vol. 13, 1-274
Remove Timeout between Authcode/Secondary Dial Tone Vol. 13, 1-277
Repeated Alert for MBS Vol. 14, 3-209
Ring Again Vol. 12, 1-162
Ring Again Cancellation Timer Vol. 12, 1-170
Ring Again on Hunt Groups Vol. 12, 1-176
Ring Reminder Off/On Option per Line Vol. 13, 1-306
RLT with No Third Party Interaction Vol. 14, 1-7
Second and Third Delay Announcements Vol. 12, 1-187
Secrecy Vol. 12, 1-194
Semi-restricted Incoming Lines Call Intercept Vol. 12, 1-202
Separate SMDR Output Files by Cust Group Vol. 13, 1-310
Series completion Vol. 15, 1-279
Series completion enhancements Vol. 15, 1-286
Service Analysis for IBN Vol. 15, 1-292
SERVORD cleanup for MBS Vol. 14, 2-405
Setting Attendant Recall Timers to Zero Vol. 12, 1-208
Short Hunt on MBS Vol. 14, 2-418
Simplified Dialing Vol. 12, 1-212
SLE on MBS/MADN Vol. 13, 2-94
SLE on MDC Vol. 13, 2-123

SMDR Derived from Bellcore AMA Record Vol. 15, 1-294
SMDR for ONI Lines Vol. 13, 1-320
Special Intercept Through Service Orders Vol. 12, 1-236
Specific Key Ringback on Ring Again Request on EBS Vol. 14, 3-216
Speed Calling Group - Long List Vol. 12, 1-243
Speed Calling Individual - Short List Vol. 12, 1-250
Station Activated DND with Feature Active Reminder Vol. 12, 1-258
Station Activation of CFB/CFD Vol. 13, 1-328
Station Camp On for Meridian Business Set Vol. 15, 2-45
Station Message Detail Recording Vol. 13, 1-339
Station Message Waiting Vol. 13, 1-349
Station Specific Auth Codes Vol. 13, 1-358
Station Specific Authcode - CDC Enhancements Vol. 13, 1-367
Storing of 24 Dialed Digits Vol. 12, 1-265
Stuttered Dial Tone for Message Waiting Vol. 13, 1-373
Supervisory Console (Basic) Vol. 13, 1-379
Suspend and Restore Remote Call Forward Lines Vol. 13, 1-382
Teen Service on MDC Vol. 13, 2-132
Terminating Billing Option Vol. 15, 1-303
TGB/TAC Access thru Special Keys Vol. 12, 1-268
Through Dialing Vol. 12, 1-273
Time of Day NCOS Vol. 15, 1-313
Time of Day Routing Vol. 15, 1-325
Trouble Key on IBN Console Vol. 12, 1-277
Trunk Busy Verify Tone Vol. 12, 1-285
TVDS - II Vol. 15, 1-335
Two-Way Splitting Vol. 12, 1-292
UCD Night Service Invocation Enhancements Vol. 12, 1-296
UCD on EBS and UCD SD Point Vol. 15, 1-345
UCD Queue Status Lamp Vol. 12, 1-302
Uniform Call Distribution (to 500/2500 Telephone Sets) Vol. 12, 1-315
Uniform Call Distribution from Queue Vol. 12, 1-325
Variable Length/Same Leading Digit(s) Translation Vol. 12, 1-331
Variable Speed Call Access Code Vol. 12, 1-343
Variable Stutter Dial Tone Vol. 13, 1-387
Variable Types of Outpulsing on Same Call Vol. 12, 1-351
VFG INWATS Ovfl Totals to AMA Tape - IBN Vol. 13, 1-393
VFG Look Ahead Vol. 13, 1-400
VFG Usage Data Vol. 13, 1-405
Virtual Access to Private Networks Vol. 14, 1-87
VMX Interface Vol. 15, 1-363
Wild Card Key Vol. 12, 1-355

deactivation
ICM Message Waiting Activation/Deactivation Vol. 16, 9-53

description
2-Way Digital FX Trunk - Business Services Vol. 11, 2-2
3-Way Conference/Transfer Vol. 11, 2-7
3WC Dial 0 for 608 Cord Board Vol. 11, 2-16
3WC/Call Transfer for UCD Vol. 11, 2-22
3WC/CXR to 2500 Set Call Waiting Interactions Vol. 11, 2-30
6 Port Conference Circuit Use Control Vol. 11, 2-35
A/C Activate/Deactivate of CFU/CFI Vol. 12, 3-2
AC to IBNISUP Interworking Vol. 12, 3-11
Access Feature Grouping Vol. 15, 4-2
Access to CCSA (BV0420) Vol. 11, 2-43
Access to CO from PBX Vol. 11, 2-50
Access to ETN Vol. 11, 2-57
Access to Special Service Facilities Vol. 11, 2-64
Account Codes Vol. 12, 3-15
ACD - Mgmt Rep 2 Way Data Stream Vol. 16, 2-62
ACD Access Feature Grouping Vol. 16, 2-2
ACD CompuCALL Vol. 16, 3-2
ACD Interaction with IVR Vol. 16, 2-29

ACD Night Service Call Queue Clearing Vol. 16, 2-79
ACD Nodal Treatment in NACD Vol. 16, 4-2
ACD on 2500 Set Vol. 16, 2-86
ACD Remote Load Management I Vol. 16, 2-106
ACD Supergroup Vol. 16, 4-8
ACD-Load Management III Vol. 16, 2-34
AC-Extended Calls to CFB/CFD Vol. 11, 2-39
ANI Information in SMDR Output Vol. 12, 3-24
ARS - (Basic) (BV0506) Vol. 12, 3-85
Attendant Call Detail Entry Vol. 12, 3-37
Attendant Call Park Recall Timer Vol. 11, 2-72
Attendant Call Selection Vol. 11, 2-77
Attendant Camp-On Vol. 11, 2-80
Attendant Conference (Maximum Six Conferees) Vol. 11, 2-89
Attendant Console Call Hold Recall Vol. 11, 2-100
Attendant Console Display Vol. 11, 2-105
Attendant Console End-to-End Signalling Vol. 11, 2-114
Attendant Console OM on an Individual Console Basis Vol. 12, 2-2
Attendant Control of Trunk Group Access Vol. 11, 2-122
Attendant Control of VFG Vol. 12, 3-48
Attendant Display of Queued Calls by ICI Key Vol. 11, 2-127
Attendant Locked Loop Operation Vol. 11, 2-136
Attendant Message Waiting Vol. 12, 3-57
Attendant Release Upon Completion of Dialing Vol. 11, 2-140
Attendant Set Up Conference
10 or More Conferees Vol. 12, 3-70
Attendant Speed Calling Vol. 11, 2-144
Attendant to Recorded Announcement Vol. 11, 2-152
Attendant to UCD Vol. 11, 2-154
Attendant Transfer Vol. 11, 2-166
Attendent - Auto Dial Vol. 11, 2-66
Audio Input on Incoming Calls in Queue (BV0602) Vol. 11, 2-169
Audio Interlude (BC0946) Vol. 11, 2-179
Audio Table Expansion (AD0822) Vol. 11, 2-192
Authcode for MDR Vol. 14, 4-12
Authorization Codes (BV0494) Vol. 12, 3-81
Automatic Intercept System (AIS) Enhancement Vol. 11, 2-196
Automatic Line Vol. 11, 2-216
Automatic Line and MADN Vol. 14, 2-2
Automatic Recall Vol. 11, 2-219
Base ACD Vol. 16, 2-114
Bellcore AMA Enhanced Automatic Route Selection Translations Vol. 14, 4-17
Blind Transfer Recall Vol. 11, 2-231
Blind Transfer Recall Identification Vol. 11, 2-244
Block Calling Name/Number Delivery Blocking per Call Vol. 15, 7-2
BOC AMA Call Code 032 Vol. 14, 4-30
BR0747 CCSA VFG Option Vol. 15, 1-2
Business Set Busy Indicator Vol. 14, 2-8
Business Set Call Waiting Originate Vol. 14, 2-17
Business Set Dial Call Waiting Vol. 14, 2-25
Busy Verification - Stations Vol. 11, 2-258
Busy Verification - Trunks Vol. 11, 2-269
Call Back Queuing (Basic) Vol. 12, 3-92
Call Forcing Tone Optionality Vol. 16, 2-209
Call Forward All Calls Vol. 11, 2-283
Call Forward Busy Vol. 11, 2-293
Call Forward Busy - Inhibit Make & Inhibit Line Busy Vol. 12, 3-100
Call Forward Busy/Don't Answer - Internal/External Vol. 12, 3-116
Call Forward Do Not Answer and Call Waiting Interaction Vol. 11, 2-321, Vol. 12, 3-136
Call Forward Indication Vol. 15, 9-2
Call Forward No Answer Vol. 11, 2-304
Call Forward Prevention Enhancements Vol. 12, 3-149
Call Forward Timed Vol. 12, 3-178
Call Forward/Automatic Dial Display Vol. 14, 2-38
Call Forwarding of Call Waiting Calls Vol. 12, 3-191
Call Hold Vol. 11, 2-334
Call Park Vol. 11, 2-348

Call Park Recall Identification Vol. 14, 3-2
Call Pickup Vol. 11, 2-364
Call Pickup Transparency Vol. 11, 2-373
Call Request Call Processing Enhancements Vol. 11, 2-375, Vol. 12, 3-200
Call Request Retrieve/Key Short Hunt Interaction Control Vol. 12, 3-203
Call Transfer Enhancement Vol. 11, 2-378
Call Waiting Vol. 11, 2-391
Call Waiting - Originating Vol. 11, 2-411
Call waiting 1A transparency issues Vol. 12, 3-208
Call Waiting for 3-Way Calling Vol. 11, 2-404
Calling Name Delivery on MADN (CNAMD on MADN) Vol. 13, 2-2
Calling Name Inspect Key Vol. 15, 2-2
Calling Name/Number Delivery Blocking (CNNB) Vol. 15, 7-20
Calling Number and NCOS Display on Attendant Console Vol. 13, 4-2
Camp On with Music Vol. 11, 2-422
CCSA Line Option Vol. 14, 4-34
CFBL Inhibit Line Busy/Inhibit MB Enhancements Vol. 12, 3-215
CFD from Hunt Group Station Vol. 11, 2-432
CFD Interaction with Three-Way Calling Vol. 11, 2-440
CFGDA for Hunt Groups Vol. 11, 2-445
CFW for MADN Secondary Members Vol. 14, 3-17
Change EBS Features During Talking State Vol. 12, 3-230
Change Line Class Codes via SERVORD Vol. 12, 3-239
Class of Service Restrictions Vol. 11, 2-455
CLASS on MBS/MADN Base Vol. 13, 2-9
CLASS on MDC Base Vol. 13, 2-28
Class on MVP Base Vol. 13, 2-66
CLEN for EBS Vol. 12, 3-272
Code Call Access Vol. 11, 2-461
Code Calling - Line Termination Vol. 11, 2-467
Code Restriction Vol. 11, 2-477
CompuCALLEnhancements-Screen-Assisted Telephony Vol. 16, 3-121
CompuCALL Integration with ICCM Vol. 16, 7-2
CompuCALL Transport Enhancements Vol. 16, 5-12
Conference Join Vol. 11, 2-484
Control of Multiple Call Forwarding Vol. 12, 3-282
COT Enhancement Vol. 13, 2-76
CPU Datafill Enhancements Vol. 11, 2-493
Customer Administration of Data Vol. 14, 4-38
Customer Dialed Account Recording (CDAR) Vol. 14, 4-56
Customer Group Transparency Vol. 11, 2-500
Customer Network Data Changes Vol. 14, 4-68
Customer Screening at the Trunk Test Position Vol. 14, 4-87
Customer Service Change Via SERVORD Vol. 14, 4-93
Cut Through Dialing Vol. 12, 3-296
Cut Thru and Thru Dialing Interaction Vol. 12, 3-303
Cut Thru Dialing for IBN Lines & A/C Vol. 12, 3-309
Denied Incoming Vol. 11, 2-505
Dial - Call Waiting Vol. 11, 2-517
Dialtone Passback via PX Trunks for MDC Vol. 12, 3-316
Dictation Access and Control (DTMF Only) Vol. 11, 2-529
Direct Inward Dialing (DID) Vol. 14, 4-107
Direct Inward System Access (DISA) Vol. 12, 3-327
Direct Outward Dialing (DOD) Vol. 11, 2-536
Direct Station Selection/Busy Lamp Field for MBS Vol. 15, 3-2
Directed Call Park Vol. 11, 2-541
Directed Call Pickup - Barge In Vol. 11, 2-553
Directed Call Pickup - Non Barge In Vol. 11, 2-563
DISA
Invalid Authcode Treatment Option Vol. 12, 3-338

DISA - Remove Auth Code Timeout Vol. 12, 3-344
DISA Enhancements Vol. 12, 3-332
DISA Third Dial Tone Vol. 12, 3-348
Display Called About Number Vol. 16, 2-221
Distinctive and Ring Again Ringing Vol. 11, 2-571
Distinctive Call Waiting Ringback Vol. 12, 3-355
Distinctive Call Waiting Tones Vol. 11, 2-576
Distinctive Ringing Vol. 11, 2-582
Distinctive Ringing Enhancements Vol. 11, 2-588
Do Not Disturb Vol. 12, 2-21
DT after CFW Cancel and Spd Call Programming Vol. 12, 3-369
DTMF Outpulsing on a Line Vol. 11, 2-606
Dynamic Measurements Vol. 12, 2-29
E911 Single Button Transfer Operation Vol. 15, 3-21
EAEO - IBN PIC Using SERVORD Vol. 12, 3-374
EBS as a Message Center Vol. 14, 2-41
EBS as a Message Center - Enhancements Vol. 14, 2-47
EBS Call Forwarding on a per Key Basis Vol. 14, 3-26
ECM/SCAI Support for Non-ACD - Ph 1 Vol. 16, 3-144
End to End Signalling via Speed Call Vol. 11, 2-618
Enhanced EBS Reason Display Vol. 14, 2-63
Enhanced Handling of ACD Re-Enqueued Calls Vol. 16, 2-238
Enhanced MADN Call Control Vol. 14, 3-54
Enhanced SERVORD II Vol. 12, 3-385
ERWT for Lines, Trunks for ARS, Call Back Queue Features Vol. 12, 3-396
ESN - Answer Supervision Generation Vol. 12, 3-403
ESN - Authorization Codes Vol. 12, 3-409
ESN - Call-Back Queuing Vol. 12, 3-420
ESN - Network Automatic Route Selection (TEHO and HEHO) Vol. 15, 1-7
ESN - Network Class of Service Vol. 15, 1-24
ESN - Network Information Signals Vol. 15, 1-29
ESN - Network Speed Call Vol. 15, 1-54
ESN - Off-hook Queuing Vol. 12, 3-431
Executive Message Service Enhancement - Multi EMW per DN Vol. 14, 2-91
Executive Right of Way Vol. 11, 2-628
Fast Transfer for Meridian Business Set Vol. 15, 3-29
Flexible Console Alerting Vol. 11, 2-638
Flexible Display Language Vol. 12, 2-34
Flexible Intercept Vol. 11, 2-648
Flexible Station Controlled Conference (500/2500 Sets) Vol. 12, 3-441
Forced Announcements for NACD Vol. 16, 4-29
Generalized Distinctive Ringing Vol. 11, 2-651
Group Intercom All Call Vol. 14, 3-90
Group Number Feature Control Vol. 13, 1-2
IBN - Optional Call Forward Links Vol. 13, 1-77
IBN & ESB Compatibility Vol. 13, 1-72
IBN Auth Codes for Alternate Route Selection (ARS) Vol. 13, 1-42
IBN Call Forward Enhancements Vol. 13, 1-50
IBN Call Forward Validation Vol. 11, 2-658
IBN Cancel Call Waiting Vol. 11, 2-668
IBN Class 5 INWATS Vol. 13, 1-56
IBN Class 5 Psuedo OUTWATS Vol. 13, 1-63
IBN Feature Activation OMs I Vol. 11, 2-673
IBN ISUP NETINFO Translations Vol. 13, 3-2
IBN LCC Compatibility with FRO Line Option Vol. 11, 2-680
IBN Outpulsing to POTS Trunks Vol. 11, 2-700
IBN Quantity Control (100 Lines) Vol. 11, 2-705
IBN Trunks with ISUP Signalling Vol. 13, 1-80
IBNRTE Table Capacity Increase Vol. 11, 2-707
ICM Configuration Management Vol. 16, 9-30

ICM Message Waiting Activation/Deactivation Vol. 16, 9-46
ICM TAPI Extensions Vol. 16, 9-65
ICM Three-Way Call Enhanced Status Reporting Vol. 16, 9-80
ICM Variable Wrap Reporting Vol. 16, 9-96
ICM Workqueue Re-Engineering Vol. 16, 9-106
IDDD via ARS Vol. 15, 1-88
Immediate Answer Reporting for IBN Vol. 11, 2-714
Immediate Notification of Priority Enqueued Calls Vol. 12, 2-45
Increase Auth Codes per Customer Group Vol. 13, 1-108
Increase in Number of IBN Customer Groups Vol. 11, 2-717
Increase Number of Equivalent DN Appearances for IBN Vol. 11, 2-721
Individual Page from GIC Vol. 14, 3-101
Interactive Display Menu on MBS Sets Vol. 15, 3-44
Interposition Calls and Transfers Vol. 11, 2-726
INWATS to Direct Inward System Access Vol. 13, 1-112
ISUP Shared Trunking Enhancement Vol. 13, 3-25
Killer Trunk Report Separation Vol. 15, 1-133
Last Number Redial (LNR) Vol. 12, 1-2
Last Number Redial from Set Vol. 14, 3-110
Lockout Vol. 12, 1-16
Loud Speaker & Radio Paging Access Vol. 12, 1-19
Loudspeaker Paging - Line Termination Vol. 12, 1-25
MACD Nodal Service Observing Vol. 16, 2-261
MACD PIN Configuration and Control Vol. 16, 2-276
MADN and Conference Interaction Vol. 12, 1-32
MADN Bridging - 3 Way Call Vol. 14, 3-117
MADN Cut-off on Disconnect (COD) Vol. 14, 3-121
MADN Ring Forward Vol. 14, 3-136
MADN Service Orders Vol. 14, 2-111
Make Set Busy Except GIC Vol. 14, 3-148
MAP Alarm Level Screening Vol. 15, 1-145
MAP Display for Attendant OM Vol. 12, 1-37
MBG Alternate Terminating Number Billing Vol. 13, 3-45
MBG Enabling of Feature Networking Vol. 13, 3-51
MBG Feature Networking Control Vol. 13, 3-56
MBG II - Support of IBN7 Trunk Features Vol. 13, 3-63
MBG III - Support of Private Numbering Plan Vol. 13, 3-75
MBG IV - Support of Network EMW Vol. 13, 3-110
MBG Redirection Enhancements for ISUP IBN Trunks Vol. 13, 4-33
MBS 30-Port Conference Vol. 12, 1-40
MBS Auto Answer Back Vol. 14, 2-130
MBS Automatic Dial Vol. 14, 2-136
MBS Automatic Line Vol. 14, 2-143
MBS Busy Override Vol. 14, 2-148
MBS Call Back Queuing Vol. 14, 2-160
MBS Call Forward All Calls Feature Key S/W Vol. 14, 2-177
MBS Call Park Vol. 14, 2-189
MBS Call Pickup Feature Key S/W Vol. 14, 2-209
MBS Call Waiting Vol. 14, 2-218
MBS Display Called Number Vol. 14, 2-226
MBS Display Calling Number Vol. 14, 2-233
MBS End to End Signalling Vol. 14, 2-241
MBS Feature Code Access Vol. 14, 2-243
MBS Feature Display Vol. 14, 2-248
MBS Group Intercom Vol. 14, 2-257
MBS Held Calls Vol. 14, 2-265
MBS II Templates Vol. 14, 2-119
MBS Individual Business Line Vol. 14, 2-267
MBS Intercom Vol. 14, 2-280
MBS Listen on Hold Vol. 14, 2-287
MBS MADN SCA/MCA (across Switch) Vol. 14, 2-289
MBS Make Set Busy Vol. 14, 2-297
MBS Malicious Call Hold Vol. 14, 2-307

MBS Message Waiting Vol. 13, 1-123
MBS Onhook Dialing Vol. 14, 2-314
MBS Power Feature - Name Programming Vol. 15, 3-62
MBS Privacy Release (across Switch) Vol. 14, 2-316
MBS Query Time Key Vol. 14, 2-328
MBS Ring-Again Feature Key S/W Vol. 14, 2-333
MBS Speed Calling Feature Key S/W Vol. 14, 2-341
MBS Three-Way Calling Transfer Vol. 14, 2-355
MDC AFG Add Option Vol. 15, 4-71
MDC Circuit Test Enhancement Vol. 14, 2-361
MDC Copy Feature Set Vol. 15, 4-58
MDC CUSTENG Robustness Vol. 12, 1-51
MDC DSS/BLF Set Based Vol. 15, 5-2
MDC Enhanced WATS Vol. 15, 1-150
MDC MBS Interactive Display Vol. 15, 4-88
MDC Single Button Transfer Vol. 15, 3-75
MDC Single Line Queue Vol. 15, 5-25
MDC to 10-digit routing Vol. 15, 10-4
MDC to Universal routing Vol. 15, 11-5
MDC Variable CDAR Vol. 13, 1-129
MDR Data in the AMA Stream Vol. 15, 1-194
Meet Me Page Vol. 13, 1-162
Meet-Me Conference Vol. 12, 1-56
Meet-Me Conference Feature Expansion Vol. 13, 1-149
Message Service - Leave Message Vol. 14, 2-376
Message Service - List Management Vol. 14, 2-392
Message Waiting Lamp Update - Link Phone Vol. 13, 1-176
Multi-location Business Group I Vol. 13, 3-120
Multipilot Directory Numbers on MLH Group Vol. 15, 1-216
Multiple Position Hunt with Queue Vol. 13, 1-182
Music on Hold for EBS Vol. 14, 3-160
MVP Dial Plan Vol. 12, 1-68
Name Display for MADN Members Vol. 14, 3-179
NAS Features Optionality Vol. 13, 4-39
Network Access Registers (NARS) Vol. 15, 6-2
Network Attendant Control Vol. 13, 4-44
Network Attendant Recall Vol. 13, 4-48
Network Camp-On-II Vol. 13, 4-52
Network Dial Plan Display Vol. 13, 4-56
Network Display Enhancement Vol. 13, 4-73
Network Feature Access Restriction Vol. 15, 8-2
Network Intelligent Call Management Vol. 16, 7-26
Network Message Waiting Indicator (MWI) Vol. 13, 4-83
Network Name Display Vol. 13, 4-103
Network Name Display for Attendant Consoles Vol. 13, 4-115
Network Wide Ring Again Vol. 13, 4-140
Networked ACD on CCS7 Vol. 16, 4-42
Networked ACD on PRA Vol. 16, 4-57
Networked EBS Display Vol. 13, 4-169
Night Service - Flexible Vol. 12, 1-78
Night Service Trunk Answer from Any Station - Fixed Vol. 12, 1-86
Night Service Trunk Answer From Any Station - TAFAS Vol. 12, 1-93
Non-Data Link Console Call Extension Vol. 13, 1-210
Off-hook Queuing Vol. 13, 1-219
OHQ, CBQ for OUTWATS VFG Vol. 13, 1-228
Optional Answer Supervision from Attendant Queue Vol. 12, 1-101
Originating/Terminating Line Select (TLS) Vol. 14, 3-194
Outgoing Restriction Control Vol. 15, 1-225
Override ACR for CFU Vol. 12, 1-107
Patch Source Inclusion I Vol. 12, 1-115
Patch Source Inclusion II Vol. 12, 1-125
Peg Counts on LDNs on Attendant Consoles Vol. 12, 2-49
Pending Order File (POF) Enhancements Vol. 15, 1-246
Permanent Hold (500/2500 Sets) Vol. 12, 1-134

Personal Call Screening of Call Forwarding Vol. 13, 1-236
PF Robustness - Call Forwarding per Key (CFK) Vol. 15, 4-101
PF Robustness - Call Pickup Separate Keys Compatibility Vol. 15, 4-118
Position Busy Vol. 12, 1-148
Power Feature Audit Trails Vol. 15, 3-84
Power Features Enhancements I Vol. 15, 3-95
Power Features Installer Application Vol. 15, 3-131
Preset Conference Vol. 13, 1-245
Preset Conference (Large) Vol. 15, 1-256
Query Functional Station Grouping Vol. 12, 1-152
Queueing OMs per Route Vol. 13, 1-261
Remove Timeout between Authcode/Secondary Dial Tone Vol. 13, 1-276
Repeated Alert for MBS Vol. 14, 3-205
Ring Again Vol. 12, 1-158
Ring Again Cancellation Timer Vol. 12, 1-167
Ring Again on Hunt Groups Vol. 12, 1-175
Ring Reminder Off/On Option per Line Vol. 13, 1-304
RLT with No Third Party Interaction Vol. 14, 1-2
Second and Third Delay Announcements Vol. 12, 1-182
Secrecy Vol. 12, 1-193
Semi-restricted Incoming Lines Call Intercept Vol. 12, 1-196
Separate SMDR Output Files by Cust Group Vol. 13, 1-309
Series completion Vol. 15, 1-273
Series completion enhancements Vol. 15, 1-282
Service Analysis for IBN Vol. 15, 1-287
SERVORD cleanup for MBS Vol. 14, 2-403
Setting Attendant Recall Timers to Zero Vol. 12, 1-207
Short Hunt on MBS Vol. 14, 2-415
Simplified Dialing Vol. 12, 1-211
SLE on MBS/MADN Vol. 13, 2-88
SLE on MDC Vol. 13, 2-106
SMDR Derived from Bellcore AMA Record Vol. 15, 1-293
SMDR for ONI Lines Vol. 13, 1-319
Special Intercept Through Service Orders Vol. 12, 1-235
Specific Key Ringback on Ring Again Request on EBS Vol. 14, 3-212
Speed Calling Group - Long List Vol. 12, 1-240
Speed Calling Individual - Short List Vol. 12, 1-245
Station Activated DND with Feature Active Reminder Vol. 12, 1-255
Station Activation of CFB/CFD Vol. 13, 1-325
Station Camp On for Meridian Business Set Vol. 15, 2-33
Station Message Detail Recording Vol. 13, 1-337
Station Message Waiting Vol. 13, 1-345
Station Specific Auth Codes Vol. 13, 1-355
Station Specific Authcode - CDC Enhancements Vol. 13, 1-364
Storing of 24 Dialed Digits Vol. 12, 1-264
Stuttered Dial Tone for Message Waiting Vol. 13, 1-372
Supervisory Console (Basic) Vol. 13, 1-378
Suspend and Restore Remote Call Forward Lines Vol. 13, 1-381
Teen Service on MDC Vol. 13, 2-125
Terminating Billing Option Vol. 15, 1-297
TGB/TAC Access thru Special Keys Vol. 12, 1-267
Through Dialing Vol. 12, 1-273
Time of Day NCOS Vol. 15, 1-312
Time of Day Routing Vol. 15, 1-324
Trouble Key on IBN Console Vol. 12, 1-275
Trunk Busy Verify Tone Vol. 12, 1-282
TVDS - II Vol. 15, 1-333
Two-Way Splitting Vol. 12, 1-292
UCD Night Service Invocation Enhancements Vol. 12, 1-294
UCD on EBS and UCD SD Point Vol. 15, 1-340
UCD Queue Status Lamp Vol. 12, 1-301
Uniform Call Distribution (to 500/2500 Telephone Sets) Vol. 12, 1-310

Uniform Call Distribution from Queue Vol. 12, 1-324
Variable Length/Same Leading Digit(s) Translation Vol. 12, 1-329
Variable Speed Call Access Code Vol. 12, 1-335
Variable Stutter Dial Tone Vol. 13, 1-385
Variable Types of Outpulsing on Same Call Vol. 12, 1-350
VFG INWATS Ovfl Totals to AMA Tape - IBN Vol. 13, 1-388
VFG Look Ahead Vol. 13, 1-397
VFG Usage Data Vol. 13, 1-404
Virtual Access to Private Networks Vol. 14, 1-39
VMX Interface Vol. 15, 1-360
Wild Card Key Vol. 12, 1-354
DIGCOL, table
contents Vol. 16, 11-2, Vol. 16, 12-3, Vol. 16, 13-3
datafilling Vol. 12, 3-353
DIGMAN (outgoing), table
datafilling Vol. 15, 1-48
DIGMAN, table
datafilling Vol. 12, 1-213, Vol. 12, 1-352, Vol. 12, 3-89, Vol. 12, 3-407, Vol. 13, 1-61, Vol. 13, 1-120, Vol. 15, 1-22
DIRPPOOL, table
datafilling Vol. 13, 1-312, Vol. 15, 1-138
DIRPSSYS, table
datafilling Vol. 13, 1-314, Vol. 15, 1-140
DNATTRS, table
datafilling Vol. 14, 3-188, Vol. 15, 7-16, Vol. 16, 2-201, Vol. 16, 11-14, Vol. 16, 12-21, Vol. 16, 13-24
DNGRPS, table
datafilling Vol. 15, 7-15
DNOWN, table
datafilling Vol. 14, 1-100
DNREGION, table
datafilling Vol. 13, 2-49, Vol. 13, 4-61
DNREVXLA, table
datafilling Vol. 13, 2-50, Vol. 13, 4-62
DNROUTE, table
datafilling Vol. 11, 2-162, Vol. 11, 2-732, Vol. 12, 1-319, Vol. 12, 2-50, Vol. 12, 3-67, Vol. 12, 3-330, Vol. 12, 3-334, Vol. 12, 3-341, Vol. 13, 1-59, Vol. 13, 1-119, Vol. 15, 1-264, Vol. 15, 6-33, Vol. 16, 2-197, Vol. 16, 11-13, Vol. 16, 12-20, Vol. 16, 13-23
DRAMS, table
announcements Vol. 16, 11-5, Vol. 16, 12-6, Vol. 16, 13-6
DRMUSERS, table
announcements Vol. 16, 11-7, Vol. 16, 12-8, Vol. 16, 13-8

F

FNMAP (dedicated key and lamp), table
datafilling Vol. 12, 1-81
FNMAP (wild card key), table
datafilling Vol. 12, 1-82
FNMAP for dedicated key/lamp assignment, table
datafilling Vol. 12, 3-44
FNMAP for Wild Card key assignment, table
datafilling Vol. 12, 3-45
FNMAP, table
datafilling Vol. 11, 2-71, Vol. 11, 2-75, Vol. 11, 2-79, Vol. 11, 2-86, Vol. 11, 2-95, Vol. 11, 2-119, Vol. 11, 2-125, Vol. 11, 2-132, Vol. 11, 2-148, Vol. 11, 2-225, Vol. 11, 2-265, Vol. 11, 2-277, Vol. 11, 2-298, Vol. 11, 2-317, Vol. 11, 2-429, Vol. 11, 2-644, Vol. 11, 2-731, Vol. 12, 1-97, Vol. 12, 1-150, Vol. 12, 1-269, Vol. 12, 1-278, Vol. 12, 1-288, Vol. 12, 1-327, Vol. 12, 2-26, Vol. 12, 2-40, Vol. 12, 3-8, Vol. 12, 3-54, Vol. 12, 3-66, Vol. 12, 3-75, Vol. 12, 3-82, Vol. 13, 1-178, Vol. 13, 1-349, Vol. 13, 1-374, Vol. 15, 1-235
FTRGDEFS , table
datafilling Vol. 15, 4-34
FTRGDEFS, table
datafilling Vol. 15, 4-81, Vol. 15, 8-13
FTRGOPTS, table
datafilling Vol. 12, 3-292, Vol. 14, 1-9, Vol. 15, 3-16, Vol. 15, 3-37, Vol. 15, 3-56, Vol. 15, 3-122, Vol. 15, 3-144, Vol. 15, 4-37, Vol. 15, 4-83, Vol. 15, 4-97, Vol. 15, 4-113, Vol. 15, 4-138, Vol. 15, 5-18, Vol. 15, 8-16
functional groups
MDC to 10-digit routing Vol. 15, 10-3
MDC to Universal routing Vol. 15, 11-4

G

GDLADEV, table
datafilling Vol. 16, 11-15, Vol. 16, 12-23, Vol. 16, 13-25

H

HNPACONT.HNPACODE (outgoing), table
datafilling Vol. 15, 1-46
HNPACONT.RTEREF (outgoing), table
datafilling Vol. 15, 1-46

I

IACINV, table
datafilling Vol. 14, 2-102
IBNFEAT, table
datafilling Vol. 16, 3-139, Vol. 16, 11-17
IBNRTE (outgoing), table
datafilling Vol. 15, 1-39
IBNRTE, table
datafilling Vol. 11, 2-615, Vol. 11, 2-709, Vol. 12, 3-88, Vol. 12, 3-322, Vol. 12, 3-438, Vol. 13, 1-47, Vol. 13, 1-59, Vol. 13, 1-68, Vol. 13, 1-118, Vol. 13, 1-224, Vol. 13, 1-230, Vol. 13, 3-95, Vol. 14, 2-173, Vol. 14, 2-275, Vol. 15, 1-13, Vol. 15, 1-164, Vol. 15, 1-314, Vol. 15, 1-326, Vol. 15, 6-30
routing Vol. 16, 13-15
translations Vol. 16, 12-13
IBNTREAT, table
datafilling Vol. 14, 2-303
IBNXLA (activation access code), table
datafilling Vol. 13, 1-171
IBNXLA (answerback access code), table
datafilling Vol. 13, 1-173
IBNXLA (outgoing and incoming), table
datafilling Vol. 15, 1-43
IBNXLA selector FEAT, table
datafilling Vol. 12, 1-121
IBNXLA selector REPL, table
datafilling Vol. 12, 1-122
IBNXLA, table
contents Vol. 16, 11-3, Vol. 16, 12-4, Vol. 16, 13-4
datafilling Vol. 11, 2-48, Vol. 11, 2-55, Vol. 11, 2-163, Vol. 11, 2-280, Vol. 11, 2-289, Vol. 11, 2-314, Vol. 11, 2-342, Vol. 11, 2-359, Vol. 11, 2-370, Vol. 11, 2-459, Vol. 11, 2-463, Vol. 11, 2-472, Vol. 11, 2-482, Vol. 11, 2-525, Vol. 11, 2-533, Vol. 11, 2-538, Vol. 11, 2-549, Vol. 11, 2-560, Vol. 11, 2-567, Vol. 11, 2-635, Vol. 11, 2-649, Vol. 11, 2-670, Vol. 12, 1-4, Vol. 12, 1-22, Vol. 12, 1-30, Vol. 12, 1-97, Vol. 12, 1-142, Vol. 12, 1-164, Vol. 12, 1-179, Vol. 12, 1-251, Vol. 12, 1-260, Vol. 12, 1-299, Vol. 12, 1-320, Vol. 12, 1-332, Vol. 12, 1-344, Vol. 12, 3-22, Vol. 12, 3-128, Vol. 12, 3-301, Vol. 12, 3-307, Vol. 12, 3-314, Vol. 12, 3-417, Vol. 12, 3-454, Vol. 13, 1-60, Vol. 13, 1-69, Vol. 13, 1-142, Vol. 13, 1-232, Vol. 13, 1-257, Vol. 13, 1-331, Vol. 13, 1-343, Vol. 13, 1-350, Vol. 13, 1-361, Vol. 13, 3-92, Vol. 14, 2-34, Vol. 14, 2-156, Vol. 14, 2-184, Vol. 14, 2-204, Vol. 14, 2-214, Vol. 14, 2-276, Vol. 14, 2-321, Vol. 14, 2-347, Vol. 14, 3-47, Vol. 14, 3-80, Vol. 14, 4-65, Vol. 15, 1-18, Vol. 15, 1-61, Vol. 15, 1-236, Vol. 15, 1-270, Vol. 15, 1-337, Vol. 15, 1-370, Vol. 15, 3-70, Vol. 15, 3-143, Vol. 15, 6-22, Vol. 15, 7-10, Vol. 15, 7-26, Vol. 15, 10-10, Vol. 15, 11-11, Vol. 16, 2-98
IBNXLA/XLANAME, table
datafilling Vol. 15, 1-169
ICIDATA , table
datafilling Vol. 11, 2-316
ICIDATA, table
datafilling Vol. 11, 2-87, Vol. 11, 2-98, Vol. 11, 2-134, Vol. 11, 2-227, Vol. 11, 2-300, Vol. 11, 2-430, Vol. 11, 2-733, Vol. 12, 1-84, Vol. 12, 1-88, Vol. 12, 1-99, Vol. 12, 2-27, Vol. 12, 2-47, Vol. 12, 3-68, Vol. 12, 3-78, Vol. 13, 1-351
INSTALL, table
datafilling Vol. 15, 3-142
interactions
2-Way Digital FX Trunk - Business Services Vol. 11, 2-4
3-Way Conference/Transfer Vol. 11, 2-11
3WC Dial 0 for 608 Cord Board Vol. 11, 2-17
3WC/Call Transfer for UCD Vol. 11, 2-27
3WC/CXR to 2500 Set Call Waiting Interactions Vol. 11, 2-32
6 Port Conference Circuit Use Control Vol. 11, 2-36

A/C Activate/Deactivate of CFU/CFI Vol. 12, 3-5
AC to IBNISUP Interworking Vol. 12, 3-13
Access Feature Grouping Vol. 15, 4-31
Access to CCSA (BV0420) Vol. 11, 2-44
Access to CO from PBX Vol. 11, 2-51
Access to ETN Vol. 11, 2-60
Access to Special Service Facilities Vol. 11, 2-65
Account Codes Vol. 12, 3-17
ACD - Mgmt Rep 2 Way Data Stream Vol. 16, 2-69
ACD Access Feature Grouping Vol. 16, 2-4
ACD Interaction with IVR Vol. 16, 2-31
ACD Night Service Call Queue Clearing Vol. 16, 2-81
ACD Nodal Treatment in NACD Vol. 16, 4-5
ACD on 2500 Set Vol. 16, 2-91
ACD Remote Load Management I Vol. 16, 2-111
ACD Supergroup Vol. 16, 4-19
ACD-Load Management III Vol. 16, 2-43
AC-Extended Calls to CFB/CFD Vol. 11, 2-40
ANI Information in SMDR Output Vol. 12, 3-28
ARS - (Basic) (BV0506) Vol. 12, 3-86
Attendant Call Detail Entry Vol. 12, 3-40
Attendant Call Park Recall Timer Vol. 11, 2-74
Attendant Call Selection Vol. 11, 2-78
Attendant Camp-On Vol. 11, 2-83
Attendant Conference (Maximum Six Conferees) Vol. 11, 2-92
Attendant Console Call Hold Recall Vol. 11, 2-102
Attendant Console Display Vol. 11, 2-112
Attendant Console End-to-End Signalling Vol. 11, 2-116
Attendant Console OM on an Individual Console Basis Vol. 12, 2-16
Attendant Control of Trunk Group Access Vol. 11, 2-124
Attendant Control of VFG Vol. 12, 3-51
Attendant Display of Queued Calls by ICI Key Vol. 11, 2-130
Attendant Locked Loop Operation Vol. 11, 2-137
Attendant Message Waiting Vol. 12, 3-62
Attendant Release Upon Completion of Dialing Vol. 11, 2-141
Attendant Set Up Conference
10 or More Conferees Vol. 12, 3-73
Attendant Speed Calling Vol. 11, 2-146
Attendant to Recorded Announcement Vol. 11, 2-153
Attendant to UCD Vol. 11, 2-158
Attendant Transfer Vol. 11, 2-166
Attendent - Auto Dial Vol. 11, 2-68
Audio Input on Incoming Calls in Queue (BV0602) Vol. 11, 2-172
Audio Interlude (BC0946) Vol. 11, 2-180
Audio Table Expansion (AD0822) Vol. 11, 2-193
Authcode for MDR Vol. 14, 4-13
Authorization Codes (BV0494) Vol. 12, 3-82
Automatic Intercept System (AIS) Enhancement Vol. 11, 2-201
Automatic Line Vol. 11, 2-216
Automatic Line and MADN Vol. 14, 2-4
Automatic Recall Vol. 11, 2-222
Base ACD Vol. 16, 2-157
Bellcore AMA Enhanced Automatic Route Selection Translations Vol. 14, 4-21
Blind Transfer Recall Vol. 11, 2-233
Block Calling Name/Number Delivery Blocking per Call Vol. 15, 7-8
BOC AMA Call Code 032 Vol. 14, 4-31
BR0747 CCSA VFG Option Vol. 15, 1-3
Business Set Call Waiting Originate Vol. 14, 2-20
Business Set Dial Call Waiting Vol. 14, 2-29
Busy Verification - Stations Vol. 11, 2-262
Busy Verification - Trunks Vol. 11, 2-273
Call Back Queuing (Basic) Vol. 12, 3-96
Call Forcing Tone Optionality Vol. 16, 2-214
Call Forward All Calls Vol. 11, 2-287
Call Forward Busy Vol. 11, 2-296
Call Forward Busy - Inhibit Make & Inhibit Line Busy Vol. 12, 3-109
Call Forward Busy/Don't Answer - Internal/External Vol. 12, 3-123

Call Forward Do Not Answer and Call Waiting Interaction Vol. 11, 2-327, Vol. 12, 3-142
Call Forward Indication Vol. 15, 9-6
Call Forward No Answer Vol. 11, 2-310
Call Forward Prevention Enhancements Vol. 12, 3-157
Call Forward Timed Vol. 12, 3-183
Call Forward/Automatic Dial Display Vol. 14, 2-39
Call Forwarding of Call Waiting Calls Vol. 12, 3-196
Call Hold Vol. 11, 2-340
Call Park Vol. 11, 2-353
Call Park Recall Identification Vol. 14, 3-8
Call Pickup Vol. 11, 2-367
Call Pickup Transparency Vol. 11, 2-374
Call Request Call Processing Enhancements Vol. 11, 2-377, Vol. 12, 3-202
Call Request Retrieve/Key Short Hunt Interaction Control Vol. 12, 3-204
Call Transfer Enhancement Vol. 11, 2-382
Call Waiting Vol. 11, 2-395
Call Waiting - Originating Vol. 11, 2-414
Call waiting 1A transparency issues Vol. 12, 3-211
Call Waiting for 3-Way Calling Vol. 11, 2-405
Calling Name Delivery on MADN (CNAMD on MADN) Vol. 13, 2-4
Calling Name Inspect Key Vol. 15, 2-6
Calling Name/Number Delivery Blocking (CNNB) Vol. 15, 7-25
Calling Number and NCOS Display on Attendant Console Vol. 13, 4-26
Camp On with Music Vol. 11, 2-426
CCSA Line Option Vol. 14, 4-35
CFBL Inhibit Line Busy/Inhibit MB Enhancements Vol. 12, 3-224
CFD from Hunt Group Station Vol. 11, 2-433
CFD Interaction with Three-Way Calling Vol. 11, 2-443
CFGDA for Hunt Groups Vol. 11, 2-448
CFW for MADN Secondary Members Vol. 14, 3-19
Change EBS Features During Talking State Vol. 12, 3-230
Change Line Class Codes via SERVORD Vol. 12, 3-257
Class of Service Restrictions Vol. 11, 2-456
CLASS on MBS/MADN Base Vol. 13, 2-15
CLASS on MDC Base Vol. 13, 2-42
Class on MVP Base Vol. 13, 2-71
CLEN for EBS Vol. 12, 3-277
Code Call Access Vol. 11, 2-462
Code Calling - Line Termination Vol. 11, 2-470
Code Restriction Vol. 11, 2-478
CompuCALLEnhancements-Screen-Assisted Telephony Vol. 16, 3-132
CompuCALL Integration with ICCM Vol. 16, 7-16
CompuCALL Transport Enhancements Vol. 16, 5-18
Conference Join Vol. 11, 2-487
Control of Multiple Call Forwarding Vol. 12, 3-287
COT Enhancement Vol. 13, 2-81
CPU Datafill Enhancements Vol. 11, 2-494
Customer Administration of Data Vol. 14, 4-42
Customer Dialed Account Recording (CDAR) Vol. 14, 4-59
Customer Group Transparency Vol. 11, 2-501
Customer Network Data Changes Vol. 14, 4-75
Customer Screening at the Trunk Test Position Vol. 14, 4-90
Customer Service Change Via SERVORD Vol. 14, 4-100
Cut Through Dialing Vol. 12, 3-298
Cut Thru and Thru Dialing Interaction Vol. 12, 3-304
Cut Thru Dialing for IBN Lines & A/C Vol. 12, 3-311
Denied Incoming Vol. 11, 2-510
Dial - Call Waiting Vol. 11, 2-520
Dialtone Passback via PX Trunks for MDC Vol. 12, 3-319
Dictation Access and Control (DTMF Only) Vol. 11, 2-532
Direct Inward Dialing (DID) Vol. 14, 4-108

Direct Inward System Access (DISA) Vol. 12, 3-329
Direct Outward Dialing (DOD) Vol. 11, 2-537
Direct Station Selection/Busy Lamp Field for MBS Vol. 15, 3-13
Directed Call Park Vol. 11, 2-542
Directed Call Pickup - Barge In Vol. 11, 2-554
Directed Call Pickup - Non Barge In Vol. 11, 2-564
DISA
Invalid Authcode Treatment Option Vol. 12, 3-340
DISA - Remove Auth Code Timeout Vol. 12, 3-345
DISA Enhancements Vol. 12, 3-333
DISA Third Dial Tone Vol. 12, 3-351
Display Called About Number Vol. 16, 2-231
Distinctive and Ring Again Ringing Vol. 11, 2-571
Distinctive Call Waiting Ringback Vol. 12, 3-358
Distinctive Call Waiting Tones Vol. 11, 2-577
Distinctive Ringing Vol. 11, 2-584
Distinctive Ringing Enhancements Vol. 11, 2-595
Do Not Disturb Vol. 12, 2-24
DT after CFW Cancel and Spd Call Programming Vol. 12, 3-370
DTMF Outpulsing on a Line Vol. 11, 2-611
Dynamic Measurements Vol. 12, 2-32
E911 Single Button Transfer Operation Vol. 15, 3-22
EAEO - IBN PIC Using SERVORD Vol. 12, 3-376
EBS as a Message Center Vol. 14, 2-43
EBS Call Forwarding on a per Key Basis Vol. 14, 3-39
ECM/SCAI Support for Non-ACD - Ph 1 Vol. 16, 3-149
End to End Signalling via Speed Call Vol. 11, 2-622
Enhanced EBS Reason Display Vol. 14, 2-85
Enhanced Handling of ACD Re-Enqueued Calls Vol. 16, 2-253
Enhanced MADN Call Control Vol. 14, 3-75
Enhanced SERVORD II Vol. 12, 3-389
ERWT for Lines, Trunks for ARS, Call Back Queue Features Vol. 12, 3-397
ESN - Answer Supervision Generation Vol. 12, 3-404
ESN - Authorization Codes Vol. 12, 3-410
ESN - Call-Back Queuing Vol. 12, 3-423
ESN - Network Automatic Route Selection (TEHO and HEHO) Vol. 15, 1-9
ESN - Network Class of Service Vol. 15, 1-25
ESN - Network Information Signals Vol. 15, 1-33
ESN - Network Speed Call Vol. 15, 1-55
ESN - Off-hook Queuing Vol. 12, 3-434
Executive Message Service Enhancement - Multi EMW per DN Vol. 14, 2-92
Executive Right of Way Vol. 11, 2-631
Fast Transfer for Meridian Business Set Vol. 15, 3-32
Flexible Console Alerting Vol. 11, 2-641
Flexible Display Language Vol. 12, 2-37
Flexible Intercept Vol. 11, 2-649
Flexible Station Controlled Conference (500/2500 Sets) Vol. 12, 3-445
Forced Announcements for NACD Vol. 16, 4-35
Generalized Distinctive Ringing Vol. 11, 2-652
Group Intercom All Call Vol. 14, 3-95
Group Number Feature Control Vol. 13, 1-6
IBN - Optional Call Forward Links Vol. 13, 1-78
IBN & ESB Compatibility Vol. 13, 1-73
IBN Auth Codes for Alternate Route Selection (ARS) Vol. 13, 1-44
IBN Call Forward Enhancements Vol. 13, 1-52
IBN Call Forward Validation Vol. 11, 2-660
IBN Cancel Call Waiting Vol. 11, 2-669
IBN Class 5 INWATS Vol. 13, 1-57
IBN Class 5 Psuedo OUTWATS Vol. 13, 1-65
IBN Feature Activation OMs I Vol. 11, 2-678
IBN ISUP NETINFO Translations Vol. 13, 3-15

IBN LCC Compatibility with FRO Line Option Vol. 11, 2-685
IBN Outpulsing to POTS Trunks Vol. 11, 2-702
IBN Quantity Control (100 Lines) Vol. 11, 2-705
IBN Trunks with ISUP Signalling Vol. 13, 1-89
IBNRTE Table Capacity Increase Vol. 11, 2-708
ICM Configuration Management Vol. 16, 9-32
ICM Message Waiting Activation/Deactivation Vol. 16, 9-53
ICM TAPI Extensions Vol. 16, 9-74
ICM Three-Way Call Enhanced Status Reporting Vol. 16, 9-92
ICM Variable Wrap Reporting Vol. 16, 9-102
ICM Workqueue Re-Engineering Vol. 16, 9-110
IDDD via ARS Vol. 15, 1-127
Immediate Answer Reporting for IBN Vol. 11, 2-715
Immediate Notification of Priority Enqueued Calls Vol. 12, 2-45
Increase Auth Codes per Customer Group Vol. 13, 1-109
Increase in Number of IBN Customer Groups Vol. 11, 2-719
Increase Number of Equivalent DN Appearances for IBN Vol. 11, 2-724
Individual Page from GIC Vol. 14, 3-104
Interactive Display Menu on MBS Sets Vol. 15, 3-52
Interposition Calls and Transfers Vol. 11, 2-729
INWATS to Direct Inward System Access Vol. 13, 1-113
ISUP Shared Trunking Enhancement Vol. 13, 3-34
Killer Trunk Report Separation Vol. 15, 1-134
Last Number Redial (LNR) Vol. 12, 1-3
Last Number Redial from Set Vol. 14, 3-113
Lockout Vol. 12, 1-16
Loud Speaker & Radio Paging Access Vol. 12, 1-21
Loudspeaker Paging - Line Termination Vol. 12, 1-27
M5209 Introduction Vol. 14, 2-100
MACD Nodal Service Observing Vol. 16, 2-270
MACD PIN Configuration and Control Vol. 16, 2-283
MADN and Conference Interaction Vol. 12, 1-35
MADN Bridging - 3 Way Call Vol. 14, 3-118
MADN Cut-off on Disconnect (COD) Vol. 14, 3-131
MADN Ring Forward Vol. 14, 3-141
MADN Service Orders Vol. 14, 2-114
Make Set Busy Except GIC Vol. 14, 3-154
MAP Alarm Level Screening Vol. 15, 1-147
MAP Display for Attendant OM Vol. 12, 1-37
MBG Alternate Terminating Number Billing Vol. 13, 3-47
MBG Enabling of Feature Networking Vol. 13, 3-54
MBG Feature Networking Control Vol. 13, 3-59
MBG II - Support of IBN7 Trunk Features Vol. 13, 3-71
MBG III - Support of Private Numbering Plan Vol. 13, 3-80
MBG IV - Support of Network EMW Vol. 13, 3-116
MBG Redirection Enhancements for ISUP IBN Trunks Vol. 13, 4-36
MBS 30-Port Conference Vol. 12, 1-43
MBS Auto Answer Back Vol. 14, 2-132
MBS Automatic Dial Vol. 14, 2-139
MBS Automatic Line Vol. 14, 2-145
MBS Busy Override Vol. 14, 2-151
MBS Call Back Queuing Vol. 14, 2-165
MBS Call Forward All Calls Feature Key S/W Vol. 14, 2-181
MBS Call Park Vol. 14, 2-195
MBS Call Pickup Feature Key S/W Vol. 14, 2-212
MBS Call Waiting Vol. 14, 2-221
MBS Display Called Number Vol. 14, 2-228
MBS Display Calling Number Vol. 14, 2-236
MBS End to End Signalling Vol. 14, 2-241

MBS Feature Code Access Vol. 14, 2-245
MBS Feature Display Vol. 14, 2-249
MBS Group Intercom Vol. 14, 2-260
MBS Held Calls Vol. 14, 2-265
MBS II Templates Vol. 14, 2-120
MBS Individual Business Line Vol. 14, 2-271
MBS Intercom Vol. 14, 2-283
MBS Listen on Hold Vol. 14, 2-287
MBS MADN SCA/MCA (across Switch) Vol. 14, 2-291
MBS Make Set Busy Vol. 14, 2-300
MBS Malicious Call Hold Vol. 14, 2-310
MBS Message Waiting Vol. 13, 1-125
MBS Onhook Dialing Vol. 14, 2-315
MBS Power Feature - Name Programming Vol. 15, 3-68
MBS Privacy Release (across Switch) Vol. 14, 2-319
MBS Query Time Key Vol. 14, 2-330
MBS Ring-Again Feature Key S/W Vol. 14, 2-335
MBS Speed Calling Feature Key S/W Vol. 14, 2-345
MBS Three-Way Calling Transfer Vol. 14, 2-357
MDC AFG Add Option Vol. 15, 4-80
MDC Circuit Test Enhancement Vol. 14, 2-368
MDC Copy Feature Set Vol. 15, 4-62
MDC CUSTENG Robustness Vol. 12, 1-52
MDC DSS/BLF Set Based Vol. 15, 5-7
MDC Enhanced WATS Vol. 15, 1-155
MDC MBS Interactive Display Vol. 15, 4-92
MDC Single Button Transfer Vol. 15, 3-76
MDC Single Line Queue Vol. 15, 5-29
MDC Variable CDAR Vol. 13, 1-136
MDR Data in the AMA Stream Vol. 15, 1-201
Meet Me Page Vol. 13, 1-165
Meet-Me Conference Vol. 12, 1-61
Meet-Me Conference Feature Expansion Vol. 13, 1-154
Message Service - Leave Message Vol. 14, 2-383
Message Service - List Management Vol. 14, 2-400
Message Waiting Lamp Update - Link Phone Vol. 13, 1-177
Multi-location Business Group I Vol. 13, 3-124
Multipilot Directory Numbers on MLH Group Vol. 15, 1-220
Multiple Position Hunt with Queue Vol. 13, 1-194
Music on Hold for EBS Vol. 14, 3-164
MVP Dial Plan Vol. 12, 1-69
Name Display for MADN Members Vol. 14, 3-186
NAS Features Optionality Vol. 13, 4-40
Network Access Registers (NARS) Vol. 15, 6-17
Network Attendant Control Vol. 13, 4-46
Network Attendant Recall Vol. 13, 4-50
Network Camp-On-II Vol. 13, 4-54
Network Dial Plan Display Vol. 13, 4-60
Network Display Enhancement Vol. 13, 4-79
Network Feature Access Restriction Vol. 15, 8-7
Network Intelligent Call Management Vol. 16, 7-31
Network Message Waiting Indicator (MWI) Vol. 13, 4-88
Network Name Display Vol. 13, 4-106
Network Name Display for Attendant Consoles Vol. 13, 4-135
Network Wide Ring Again Vol. 13, 4-153
Networked ACD on CCS7 Vol. 16, 4-51
Networked ACD on PRA Vol. 16, 4-65
Networked EBS Display Vol. 13, 4-171
Night Service - Flexible Vol. 12, 1-80
Night Service Trunk Answer from Any Station - Fixed Vol. 12, 1-87
Night Service Trunk Answer From Any Station - TAFAS Vol. 12, 1-95
Non-Data Link Console Call Extension Vol. 13, 1-212
Off-hook Queuing Vol. 13, 1-220
OHQ, CBQ for OUTWATS VFG Vol. 13, 1-229
Optional Answer Supervision from Attendant Queue Vol. 12, 1-104
Originating/Terminating Line Select (TLS) Vol. 14, 3-198

Outgoing Restriction Control Vol. 15, 1-228
Override ACR for CFU Vol. 12, 1-110
Patch Source Inclusion I Vol. 12, 1-118
Patch Source Inclusion II Vol. 12, 1-130
Peg Counts on LDNs on Attendant Consoles Vol. 12, 2-50
Pending Order File (POF) Enhancements Vol. 15, 1-248
Permanent Hold (500/2500 Sets) Vol. 12, 1-140
Personal Call Screening of Call Forwarding Vol. 13, 1-240
PF Robustness - Call Forwarding per Key (CFK) Vol. 15, 4-106
PF Robustness - Call Pickup Separate Keys Compatibility Vol. 15, 4-121
Position Busy Vol. 12, 1-149
Power Feature Audit Trails Vol. 15, 3-88
Power Features Enhancements I Vol. 15, 3-102
Power Features Installer Application Vol. 15, 3-139
Preset Conference Vol. 13, 1-248
Preset Conference (Large) Vol. 15, 1-261
Query Functional Station Grouping Vol. 12, 1-156
Queueing OMs per Route Vol. 13, 1-274
Remove Timeout between Authcode/Secondary Dial Tone Vol. 13, 1-277
Repeated Alert for MBS Vol. 14, 3-208
Ring Again Vol. 12, 1-161
Ring Again Cancellation Timer Vol. 12, 1-170
Ring Reminder Off/On Option per Line Vol. 13, 1-306
RLT with No Third Party Interaction Vol. 14, 1-6
Second and Third Delay Announcements Vol. 12, 1-187
Secrecy Vol. 12, 1-193
Semi-restricted Incoming Lines Call Intercept Vol. 12, 1-202
Separate SMDR Output Files by Cust Group Vol. 13, 1-310
Series completion Vol. 15, 1-278
Series completion enhancements Vol. 15, 1-282
Service Analysis for IBN Vol. 15, 1-292
SERVORD cleanup for MBS Vol. 14, 2-405
Setting Attendant Recall Timers to Zero Vol. 12, 1-208
Short Hunt on MBS Vol. 14, 2-417
Simplified Dialing Vol. 12, 1-212
SLE on MBS/MADN Vol. 13, 2-93
SLE on MDC Vol. 13, 2-116
SMDR Derived from Bellcore AMA Record Vol. 15, 1-294
SMDR for ONI Lines Vol. 13, 1-320
Special Intercept Through Service Orders Vol. 12, 1-236
Specific Key Ringback on Ring Again Request on EBS Vol. 14, 3-215
Speed Calling Group - Long List Vol. 12, 1-242
Speed Calling Individual - Short List Vol. 12, 1-250
Station Activated DND with Feature Active Reminder Vol. 12, 1-256
Station Activation of CFB/CFD Vol. 13, 1-327
Station Camp On for Meridian Business Set Vol. 15, 2-42
Station Message Detail Recording Vol. 13, 1-338
Station Message Waiting Vol. 13, 1-347
Station Specific Auth Codes Vol. 13, 1-358
Station Specific Authcode - CDC Enhancements Vol. 13, 1-367
Storing of 24 Dialed Digits Vol. 12, 1-265
Stuttered Dial Tone for Message Waiting Vol. 13, 1-373
Supervisory Console (Basic) Vol. 13, 1-379
Suspend and Restore Remote Call Forward Lines Vol. 13, 1-382
Teen Service on MDC Vol. 13, 2-131
Terminating Billing Option Vol. 15, 1-302
TGB/TAC Access thru Special Keys Vol. 12, 1-268
Through Dialing Vol. 12, 1-273
Time of Day NCOS Vol. 15, 1-313
Time of Day Routing Vol. 15, 1-325
Trouble Key on IBN Console Vol. 12, 1-276
Trunk Busy Verify Tone Vol. 12, 1-284
TVDS - II Vol. 15, 1-335

Two-Way Splitting Vol. 12, 1-292
UCD Night Service Invocation Enhancements Vol. 12, 1-295
UCD on EBS and UCD SD Point Vol. 15, 1-345
UCD Queue Status Lamp Vol. 12, 1-302
Uniform Call Distribution (to 500/2500 Telephone Sets) Vol. 12, 1-314
Uniform Call Distribution from Queue Vol. 12, 1-325
Variable Length/Same Leading Digit(s) Translation Vol. 12, 1-331
Variable Speed Call Access Code Vol. 12, 1-343
Variable Stutter Dial Tone Vol. 13, 1-386
Variable Types of Outpulsing on Same Call Vol. 12, 1-351
VFG INWATS Ovfl Totals to AMA Tape - IBN Vol. 13, 1-393
VFG Look Ahead Vol. 13, 1-400
VFG Usage Data Vol. 13, 1-404
Virtual Access to Private Networks Vol. 14, 1-87
VMX Interface Vol. 15, 1-362
Wild Card Key Vol. 12, 1-354
ISUPDEST, table
datafilling Vol. 13, 1-103
translations Vol. 16, 12-12

K

KSETFEAT, table
datafilling Vol. 16, 3-140
KSETINV, table
datafilling Vol. 16, 11-17
KSETKEYS, table
datafilling Vol. 16, 2-5
KSETLINE, table
datafilling Vol. 16, 2-219, Vol. 16, 11-16

L

LCCOPT, table
datafilling Vol. 15, 5-32
LCMINV, table
datafilling Vol. 11, 2-572, Vol. 11, 2-585, Vol. 11, 2-597, Vol. 11, 2-653, Vol. 12, 1-164, Vol. 12, 1-178, Vol. 13, 2-138
limitations
2-Way Digital FX Trunk - Business Services Vol. 11, 2-4
3-Way Conference/Transfer Vol. 11, 2-11
3WC Dial 0 for 608 Cord Board Vol. 11, 2-16
3WC/Call Transfer for UCD Vol. 11, 2-27
3WC/CXR to 2500 Set Call Waiting Interactions Vol. 11, 2-32
6 Port Conference Circuit Use Control Vol. 11, 2-35
A/C Activate/Deactivate of CFU/CFI Vol. 12, 3-5
AC to IBNISUP Interworking Vol. 12, 3-13
Access Feature Grouping Vol. 15, 4-28
Access to CCSA (BV0420) Vol. 11, 2-44
Access to CO from PBX Vol. 11, 2-51
Access to ETN Vol. 11, 2-60
Access to Special Service Facilities Vol. 11, 2-65
Account Codes Vol. 12, 3-17
ACD - Mgmt Rep 2 Way Data Stream Vol. 16, 2-68
ACD Access Feature Grouping Vol. 16, 2-4
ACD CompuCALL Vol. 16, 3-29
ACD Interaction with IVR Vol. 16, 2-31
ACD Night Service Call Queue Clearing Vol. 16, 2-81
ACD Nodal Treatment in NACD Vol. 16, 4-5
ACD on 2500 Set Vol. 16, 2-89
ACD Remote Load Management I Vol. 16, 2-111
ACD Supergroup Vol. 16, 4-19
ACD-Load Management III Vol. 16, 2-42
AC-Extended Calls to CFB/CFD Vol. 11, 2-40
ANI Information in SMDR Output Vol. 12, 3-25
ARS - (Basic) (BV0506) Vol. 12, 3-86
Attendant Call Detail Entry Vol. 12, 3-40
Attendant Call Park Recall Timer Vol. 11, 2-74
Attendant Call Selection Vol. 11, 2-78
Attendant Camp-On Vol. 11, 2-83
Attendant Conference (Maximum Six Conferees) Vol. 11, 2-92

Attendant Console Call Hold Recall Vol. 11, 2-102
Attendant Console Display Vol. 11, 2-112
Attendant Console End-to-End Signalling Vol. 11, 2-115
Attendant Console OM on an Individual Console Basis Vol. 12, 2-15
Attendant Control of Trunk Group Access Vol. 11, 2-123
Attendant Control of VFG Vol. 12, 3-51
Attendant Display of Queued Calls by ICI Key Vol. 11, 2-130
Attendant Locked Loop Operation Vol. 11, 2-137
Attendant Message Waiting Vol. 12, 3-62
Attendant Release Upon Completion of Dialing Vol. 11, 2-141
Attendant Set Up Conference
10 or More Conferees Vol. 12, 3-73
Attendant Speed Calling Vol. 11, 2-146
Attendant to Recorded Announcement Vol. 11, 2-153
Attendant to UCD Vol. 11, 2-157
Attendant Transfer Vol. 11, 2-166
Attendent - Auto Dial Vol. 11, 2-68
Audio Input on Incoming Calls in Queue (BV0602) Vol. 11, 2-172
Audio Interlude (BC0946) Vol. 11, 2-180
Audio Table Expansion (AD0822) Vol. 11, 2-193
Authcode for MDR Vol. 14, 4-13
Authorization Codes (BV0494) Vol. 12, 3-82
Automatic Intercept System (AIS) Enhancement Vol. 11, 2-201
Automatic Line Vol. 11, 2-216
Automatic Line and MADN Vol. 14, 2-3
Automatic Recall Vol. 11, 2-222
Base ACD Vol. 16, 2-155
Bellcore AMA Enhanced Automatic Route Selection Translations Vol. 14, 4-20
Blind Transfer Recall Vol. 11, 2-232
Blind Transfer Recall Identification Vol. 11, 2-249
Block Calling Name/Number Delivery Blocking per Call Vol. 15, 7-8
BOC AMA Call Code 032 Vol. 14, 4-31
BR0747 CCSA VFG Option Vol. 15, 1-3
Business Set Busy Indicator Vol. 14, 2-11
Business Set Call Waiting Originate Vol. 14, 2-19
Business Set Dial Call Waiting Vol. 14, 2-29
Busy Verification - Stations Vol. 11, 2-261
Busy Verification - Trunks Vol. 11, 2-272
Call Back Queuing (Basic) Vol. 12, 3-95
Call Forcing Tone Optionality Vol. 16, 2-213
Call Forward All Calls Vol. 11, 2-287
Call Forward Busy Vol. 11, 2-296
Call Forward Busy - Inhibit Make & Inhibit Line Busy Vol. 12, 3-109
Call Forward Busy/Don't Answer - Internal/External Vol. 12, 3-122
Call Forward Do Not Answer and Call Waiting Interaction Vol. 11, 2-327, Vol. 12, 3-142
Call Forward Indication Vol. 15, 9-5
Call Forward No Answer Vol. 11, 2-310
Call Forward Prevention Enhancements Vol. 12, 3-157
Call Forward Timed Vol. 12, 3-182
Call Forward/Automatic Dial Display Vol. 14, 2-39
Call Forwarding of Call Waiting Calls Vol. 12, 3-196
Call Hold Vol. 11, 2-340
Call Park Vol. 11, 2-353
Call Park Recall Identification Vol. 14, 3-8
Call Pickup Vol. 11, 2-367
Call Pickup Transparency Vol. 11, 2-374
Call Request Call Processing Enhancements Vol. 11, 2-376, Vol. 12, 3-201
Call Request Retrieve/Key Short Hunt Interaction Control Vol. 12, 3-204
Call Transfer Enhancement Vol. 11, 2-381
Call Waiting Vol. 11, 2-395
Call Waiting - Originating Vol. 11, 2-413
Call waiting 1A transparency issues Vol. 12, 3-210
Calling Name Delivery on MADN (CNAMD on MADN) Vol. 13, 2-4
Calling Name Inspect Key Vol. 15, 2-5
Calling Name/Number Delivery Blocking (CNNB) Vol. 15, 7-25
Calling Number and NCOS Display on Attendant Console Vol. 13, 4-25
Camp On with Music Vol. 11, 2-425

CCSA Line Option Vol. 14, 4-35
CFBL Inhibit Line Busy/Inhibit MB Enhancements Vol. 12, 3-223
CFD from Hunt Group Station Vol. 11, 2-433
CFD Interaction with Three-Way Calling Vol. 11, 2-443
CFGDA for Hunt Groups Vol. 11, 2-447
CFW for MADN Secondary Members Vol. 14, 3-19
Change EBS Features During Talking State Vol. 12, 3-230
Change Line Class Codes via SERVORD Vol. 12, 3-256
Class of Service Restrictions Vol. 11, 2-456
CLASS on MBS/MADN Base Vol. 13, 2-13
CLASS on MDC Base Vol. 13, 2-40
Class on MVP Base Vol. 13, 2-69
CLEN for EBS Vol. 12, 3-276
Code Call Access Vol. 11, 2-462
Code Calling - Line Termination Vol. 11, 2-470
Code Restriction Vol. 11, 2-478
CompuCALLEnhancements-Screen-Assisted Telephony Vol. 16, 3-132
CompuCALL Integration with ICCM Vol. 16, 7-15
CompuCALL Transport Enhancements Vol. 16, 5-17
Conference Join Vol. 11, 2-486
Control of Multiple Call Forwarding Vol. 12, 3-286
COT Enhancement Vol. 13, 2-80
CPU Datafill Enhancements Vol. 11, 2-494
Customer Administration of Data Vol. 14, 4-40
Customer Dialed Account Recording (CDAR) Vol. 14, 4-59
Customer Group Transparency Vol. 11, 2-501
Customer Network Data Changes Vol. 14, 4-74
Customer Screening at the Trunk Test Position Vol. 14, 4-89
Customer Service Change Via SERVORD Vol. 14, 4-100
Cut Through Dialing Vol. 12, 3-297
Cut Thru and Thru Dialing Interaction Vol. 12, 3-304
Cut Thru Dialing for IBN Lines & A/C Vol. 12, 3-310
Denied Incoming Vol. 11, 2-510
Dial - Call Waiting Vol. 11, 2-519
Dialtone Passback via PX Trunks for MDC Vol. 12, 3-318
Dictation Access and Control (DTMF Only) Vol. 11, 2-531
Direct Inward Dialing (DID) Vol. 14, 4-108
Direct Inward System Access (DISA) Vol. 12, 3-329
Direct Outward Dialing (DOD) Vol. 11, 2-537
Direct Station Selection/Busy Lamp Field for MBS Vol. 15, 3-12
Directed Call Park Vol. 11, 2-542
Directed Call Pickup - Barge In Vol. 11, 2-554
Directed Call Pickup - Non Barge In Vol. 11, 2-563
DISA
Invalid Authcode Treatment Option Vol. 12, 3-340
DISA - Remove Auth Code Timeout Vol. 12, 3-345
DISA Enhancements Vol. 12, 3-333
DISA Third Dial Tone Vol. 12, 3-351
Display Called About Number Vol. 16, 2-231
Distinctive Call Waiting Ringback Vol. 12, 3-357
Distinctive Call Waiting Tones Vol. 11, 2-577
Distinctive Ringing Vol. 11, 2-583
Distinctive Ringing Enhancements Vol. 11, 2-595
Do Not Disturb Vol. 12, 2-23
DT after CFW Cancel and Spd Call Programming Vol. 12, 3-370
DTMF Outpulsing on a Line Vol. 11, 2-611
Dynamic Measurements Vol. 12, 2-32
E911 Single Button Transfer Operation Vol. 15, 3-22
EAEO - IBN PIC Using SERVORD Vol. 12, 3-376
EBS as a Message Center Vol. 14, 2-43

EBS Call Forwarding on a per Key Basis Vol. 14, 3-38
ECM/SCAI Support for Non-ACD - Ph 1 Vol. 16, 3-149
End to End Signalling via Speed Call Vol. 11, 2-622
Enhanced EBS Reason Display Vol. 14, 2-85
Enhanced Handling of ACD Re-Enqueued Calls Vol. 16, 2-253
Enhanced MADN Call Control Vol. 14, 3-75
Enhanced SERVORD II Vol. 12, 3-389
ERWT for Lines, Trunks for ARS, Call Back Queue Features Vol. 12, 3-397
ESN - Answer Supervision Generation Vol. 12, 3-404
ESN - Authorization Codes Vol. 12, 3-410
ESN - Call-Back Queuing Vol. 12, 3-423
ESN - Network Automatic Route Selection (TEHO and HEHO) Vol. 15, 1-9
ESN - Network Class of Service Vol. 15, 1-25
ESN - Network Information Signals Vol. 15, 1-32
ESN - Network Speed Call Vol. 15, 1-55
ESN - Off-hook Queuing Vol. 12, 3-433
Executive Message Service Enhancement - Multi EMW per DN Vol. 14, 2-92
Executive Right of Way Vol. 11, 2-631
Fast Transfer for Meridian Business Set Vol. 15, 3-32
Flexible Console Alerting Vol. 11, 2-641
Flexible Display Language Vol. 12, 2-37
Flexible Intercept Vol. 11, 2-648
Flexible Station Controlled Conference (500/2500 Sets) Vol. 12, 3-445
Forced Announcements for NACD Vol. 16, 4-35
Generalized Distinctive Ringing Vol. 11, 2-652
Group Intercom All Call Vol. 14, 3-94
Group Number Feature Control Vol. 13, 1-5
IBN - Optional Call Forward Links Vol. 13, 1-77
IBN & ESB Compatibility Vol. 13, 1-73
IBN Auth Codes for Alternate Route Selection (ARS) Vol. 13, 1-44
IBN Call Forward Enhancements Vol. 13, 1-52
IBN Call Forward Validation Vol. 11, 2-660
IBN Cancel Call Waiting Vol. 11, 2-669
IBN Class 5 INWATS Vol. 13, 1-57
IBN Class 5 Psuedo OUTWATS Vol. 13, 1-65
IBN Feature Activation OMs I Vol. 11, 2-678
IBN ISUP NETINFO Translations Vol. 13, 3-14
IBN LCC Compatibility with FRO Line Option Vol. 11, 2-684
IBN Outpulsing to POTS Trunks Vol. 11, 2-702
IBN Quantity Control (100 Lines) Vol. 11, 2-705
IBN Trunks with ISUP Signalling Vol. 13, 1-88
IBNRTE Table Capacity Increase Vol. 11, 2-708
ICM Configuration Management Vol. 16, 9-32
ICM Message Waiting Activation/Deactivation Vol. 16, 9-52
ICM TAPI Extensions Vol. 16, 9-74
ICM Three-Way Call Enhanced Status Reporting Vol. 16, 9-92
ICM Variable Wrap Reporting Vol. 16, 9-101
ICM Workqueue Re-Engineering Vol. 16, 9-110
IDDD via ARS Vol. 15, 1-127
Immediate Answer Reporting for IBN Vol. 11, 2-715
Immediate Notification of Priority Enqueued Calls Vol. 12, 2-45
Increase Auth Codes per Customer Group Vol. 13, 1-109
Increase in Number of IBN Customer Groups Vol. 11, 2-718
Increase Number of Equivalent DN Appearances for IBN Vol. 11, 2-724
Individual Page from GIC Vol. 14, 3-104
Interactive Display Menu on MBS Sets Vol. 15, 3-52
Interposition Calls and Transfers Vol. 11, 2-729

INWATS to Direct Inward System Access Vol. 13, 1-112
ISUP Shared Trunking Enhancement Vol. 13, 3-34
Killer Trunk Report Separation Vol. 15, 1-134
Last Number Redial (LNR) Vol. 12, 1-2
Last Number Redial from Set Vol. 14, 3-113
Lockout Vol. 12, 1-16
Loud Speaker & Radio Paging Access Vol. 12, 1-20
Loudspeaker Paging - Line Termination Vol. 12, 1-26
M5209 Introduction Vol. 14, 2-99
MACD Nodal Service Observing Vol. 16, 2-269
MACD PIN Configuration and Control Vol. 16, 2-281
MADN and Conference Interaction Vol. 12, 1-35
MADN Bridging - 3 Way Call Vol. 14, 3-118
MADN Cut-off on Disconnect (COD) Vol. 14, 3-130
MADN Ring Forward Vol. 14, 3-139
MADN Service Orders Vol. 14, 2-114
Make Set Busy Except GIC Vol. 14, 3-154
MAP Alarm Level Screening Vol. 15, 1-147
MAP Display for Attendant OM Vol. 12, 1-37
MBG Alternate Terminating Number Billing Vol. 13, 3-46
MBG Enabling of Feature Networking Vol. 13, 3-54
MBG Feature Networking Control Vol. 13, 3-59
MBG II - Support of IBN7 Trunk Features Vol. 13, 3-71
MBG III - Support of Private Numbering Plan Vol. 13, 3-79
MBG IV - Support of Network EMW Vol. 13, 3-116
MBG Redirection Enhancements for ISUP IBN Trunks Vol. 13, 4-36
MBS 30-Port Conference Vol. 12, 1-43
MBS Auto Answer Back Vol. 14, 2-132
MBS Automatic Dial Vol. 14, 2-138
MBS Automatic Line Vol. 14, 2-145
MBS Busy Override Vol. 14, 2-151
MBS Call Back Queuing Vol. 14, 2-165
MBS Call Forward All Calls Feature Key S/W Vol. 14, 2-181
MBS Call Park Vol. 14, 2-194
MBS Call Pickup Feature Key S/W Vol. 14, 2-212
MBS Call Waiting Vol. 14, 2-220
MBS Display Called Number Vol. 14, 2-228
MBS Display Calling Number Vol. 14, 2-236
MBS End to End Signalling Vol. 14, 2-241
MBS Feature Code Access Vol. 14, 2-245
MBS Feature Display Vol. 14, 2-249
MBS Group Intercom Vol. 14, 2-259
MBS Held Calls Vol. 14, 2-265
MBS II Templates Vol. 14, 2-120
MBS Individual Business Line Vol. 14, 2-270
MBS Intercom Vol. 14, 2-282
MBS Listen on Hold Vol. 14, 2-287
MBS MADN SCA/MCA (across Switch) Vol. 14, 2-291
MBS Make Set Busy Vol. 14, 2-300
MBS Malicious Call Hold Vol. 14, 2-309
MBS Message Waiting Vol. 13, 1-125
MBS Onhook Dialing Vol. 14, 2-314
MBS Power Feature - Name Programming Vol. 15, 3-68
MBS Privacy Release (across Switch) Vol. 14, 2-319
MBS Query Time Key Vol. 14, 2-330
MBS Ring-Again Feature Key S/W Vol. 14, 2-335
MBS Speed Calling Feature Key S/W Vol. 14, 2-345
MBS Three-Way Calling Transfer Vol. 14, 2-357
MDC AFG Add Option Vol. 15, 4-80
MDC Circuit Test Enhancement Vol. 14, 2-367
MDC Copy Feature Set Vol. 15, 4-61
MDC CUSTENG Robustness Vol. 12, 1-51
MDC DSS/BLF Set Based Vol. 15, 5-7
MDC Enhanced WATS Vol. 15, 1-155
MDC MBS Interactive Display Vol. 15, 4-92
MDC Single Button Transfer Vol. 15, 3-76
MDC Single Line Queue Vol. 15, 5-28

MDC to 10-digit routing Vol. 15, 10-8
MDC to Universal routing Vol. 15, 11-9
MDC Variable CDAR Vol. 13, 1-135
MDR Data in the AMA Stream Vol. 15, 1-200
Meet Me Page Vol. 13, 1-165
Meet-Me Conference Vol. 12, 1-61
Meet-Me Conference Feature Expansion Vol. 13, 1-154
Message Service - Leave Message Vol. 14, 2-381
Message Service - List Management Vol. 14, 2-400
Message Waiting Lamp Update - Link Phone Vol. 13, 1-177
Multi-location Business Group I Vol. 13, 3-123
Multipilot Directory Numbers on MLH Group Vol. 15, 1-220
Multiple Position Hunt with Queue Vol. 13, 1-193
Music on Hold for EBS Vol. 14, 3-164
MVP Dial Plan Vol. 12, 1-69
Name Display for MADN Members Vol. 14, 3-186
NAS Features Optionality Vol. 13, 4-40
Network Access Registers (NARS) Vol. 15, 6-16
Network Attendant Control Vol. 13, 4-46
Network Attendant Recall Vol. 13, 4-50
Network Camp-On-II Vol. 13, 4-53
Network Dial Plan Display Vol. 13, 4-59
Network Display Enhancement Vol. 13, 4-78
Network Feature Access Restriction Vol. 15, 8-6
Network Intelligent Call Management Vol. 16, 7-30
Network Message Waiting Indicator (MWI) Vol. 13, 4-87
Network Name Display Vol. 13, 4-106
Network Name Display for Attendant Consoles Vol. 13, 4-135
Network Wide Ring Again Vol. 13, 4-153
Networked ACD on CCS7 Vol. 16, 4-50
Networked ACD on PRA Vol. 16, 4-65
Networked EBS Display Vol. 13, 4-170
Night Service - Flexible Vol. 12, 1-80
Night Service Trunk Answer from Any Station - Fixed Vol. 12, 1-87
Night Service Trunk Answer From Any Station - TAFAS Vol. 12, 1-94
Non-Data Link Console Call Extension Vol. 13, 1-211
Off-hook Queuing Vol. 13, 1-220
OHQ, CBQ for OUTWATS VFG Vol. 13, 1-228
Optional Answer Supervision from Attendant Queue Vol. 12, 1-103
Originating/Terminating Line Select (TLS) Vol. 14, 3-198
Outgoing Restriction Control Vol. 15, 1-227
Override ACR for CFU Vol. 12, 1-110
Patch Source Inclusion I Vol. 12, 1-118
Patch Source Inclusion II Vol. 12, 1-130
Peg Counts on LDNs on Attendant Consoles Vol. 12, 2-50
Pending Order File (POF) Enhancements Vol. 15, 1-248
Permanent Hold (500/2500 Sets) Vol. 12, 1-139
Personal Call Screening of Call Forwarding Vol. 13, 1-240
PF Robustness - Call Forwarding per Key (CFK) Vol. 15, 4-105
PF Robustness - Call Pickup Separate Keys Compatibility Vol. 15, 4-121
Position Busy Vol. 12, 1-148
Power Feature Audit Trails Vol. 15, 3-87
Power Features Enhancements I Vol. 15, 3-101
Power Features Installer Application Vol. 15, 3-139
Preset Conference Vol. 13, 1-248
Preset Conference (Large) Vol. 15, 1-260
Query Functional Station Grouping Vol. 12, 1-156
Queueing OMs per Route Vol. 13, 1-274
Remove Timeout between Authcode/Secondary Dial Tone Vol. 13, 1-277
Repeated Alert for MBS Vol. 14, 3-207
Ring Again Vol. 12, 1-161
Ring Again Cancellation Timer Vol. 12, 1-169
Ring Again on Hunt Groups Vol. 12, 1-176

Ring Reminder Off/On Option per Line Vol. 13, 1-306
RLT with No Third Party Interaction Vol. 14, 1-6
Second and Third Delay Announcements Vol. 12, 1-187
Secrecy Vol. 12, 1-193
Semi-restricted Incoming Lines Call Intercept Vol. 12, 1-202
Separate SMDR Output Files by Cust Group Vol. 13, 1-310
Series completion Vol. 15, 1-277
Series completion enhancements Vol. 15, 1-282
Service Analysis for IBN Vol. 15, 1-292
SERVORD cleanup for MBS Vol. 14, 2-405
Setting Attendant Recall Timers to Zero Vol. 12, 1-208
Short Hunt on MBS Vol. 14, 2-417
Simplified Dialing Vol. 12, 1-212
SLE on MBS/MADN Vol. 13, 2-91
SLE on MDC Vol. 13, 2-114
SMDR Derived from Bellcore AMA Record Vol. 15, 1-294
SMDR for ONI Lines Vol. 13, 1-320
Special Intercept Through Service Orders Vol. 12, 1-236
Specific Key Ringback on Ring Again Request on EBS Vol. 14, 3-215
Speed Calling Group - Long List Vol. 12, 1-242
Speed Calling Individual - Short List Vol. 12, 1-249
Station Activated DND with Feature Active Reminder Vol. 12, 1-256
Station Activation of CFB/CFD Vol. 13, 1-327
Station Camp On for Meridian Business Set Vol. 15, 2-42
Station Message Detail Recording Vol. 13, 1-338
Station Message Waiting Vol. 13, 1-347
Station Specific Auth Codes Vol. 13, 1-358
Station Specific Authcode - CDC Enhancements Vol. 13, 1-367
Storing of 24 Dialed Digits Vol. 12, 1-265
Stuttered Dial Tone for Message Waiting Vol. 13, 1-373
Supervisory Console (Basic) Vol. 13, 1-379
Suspend and Restore Remote Call Forward Lines Vol. 13, 1-382
Teen Service on MDC Vol. 13, 2-130
Terminating Billing Option Vol. 15, 1-302
TGB/TAC Access thru Special Keys Vol. 12, 1-268
Through Dialing Vol. 12, 1-273
Time of Day NCOS Vol. 15, 1-313
Time of Day Routing Vol. 15, 1-325
Trouble Key on IBN Console Vol. 12, 1-276
Trunk Busy Verify Tone Vol. 12, 1-283
TVDS - II Vol. 15, 1-334
Two-Way Splitting Vol. 12, 1-292
UCD Night Service Invocation Enhancements Vol. 12, 1-295
UCD on EBS and UCD SD Point Vol. 15, 1-344
UCD Queue Status Lamp Vol. 12, 1-302
Uniform Call Distribution (to 500/2500 Telephone Sets) Vol. 12, 1-313
Uniform Call Distribution from Queue Vol. 12, 1-325
Variable Length/Same Leading Digit(s) Translation Vol. 12, 1-330
Variable Speed Call Access Code Vol. 12, 1-341
Variable Stutter Dial Tone Vol. 13, 1-386
Variable Types of Outpulsing on Same Call Vol. 12, 1-351
VFG INWATS Ovfl Totals to AMA Tape - IBN Vol. 13, 1-393
VFG Look Ahead Vol. 13, 1-400
VFG Usage Data Vol. 13, 1-404
Virtual Access to Private Networks Vol. 14, 1-85
VMX Interface Vol. 15, 1-361
Wild Card Key Vol. 12, 1-354
LINEATTR (outgoing), table datafilling Vol. 15, 1-42
LINEATTR, table datafilling Vol. 13, 1-66, Vol. 13, 1-231, Vol. 14, 2-122, Vol. 15, 1-166, Vol. 15, 10-12, Vol. 15, 11-14

LMRNG, table
datafilling Vol. 11, 2-574, Vol. 11, 2-586, Vol. 11, 2-599, Vol. 11, 2-656, Vol. 13, 2-137
LNINV, table
datafilling Vol. 12, 3-278, Vol. 14, 2-100, Vol. 14, 2-371, Vol. 14, 4-101
LTCALLS, table
routing Vol. 16, 13-15
LTCINV, table
datafilling Vol. 14, 2-101
routing Vol. 16, 13-10
LTCPSINV, table
routing Vol. 16, 13-11
LTDATA, table
routing Vol. 16, 13-14
LTDEF, table
routing Vol. 16, 13-14
LTGRP, table
routing Vol. 16, 13-13
LTMAP, table
routing Vol. 16, 13-14

M

Meridian Digital Centrex
datafilling Vol. 11, 1-6
functional groups Vol. 11, 1-35
translations Vol. 11, 1-1
MMCONF, table
datafilling Vol. 12, 1-64, Vol. 13, 1-158, Vol. 15, 6-31
MPC, table
datafilling Vol. 16, 3-46, Vol. 16, 11-14, Vol. 16, 12-22, Vol. 16, 13-25
MPCLINK, table
datafilling Vol. 16, 3-50, Vol. 16, 11-14, Vol. 16, 12-23, Vol. 16, 13-25
MPHCON, table
datafilling Vol. 13, 1-200
MPHGRP, table
datafilling Vol. 13, 1-198
MTAHORIZ, table
datafilling Vol. 14, 2-371

N

NACDGRP, table
datafilling Vol. 12, 1-132, Vol. 16, 4-6, Vol. 16, 4-25, Vol. 16, 4-37, Vol. 16, 4-54, Vol. 16, 4-69, Vol. 16, 11-12, Vol. 16, 12-18, Vol. 16, 13-21
NARDATA, table
datafilling Vol. 15, 6-20
NC0OS, table
contents Vol. 16, 13-5
NCOS (outgoing and incoming), table
datafilling Vol. 15, 1-40
NCOS with XLAS option , table
datafilling Vol. 14, 2-170
NCOS, table
contents Vol. 16, 11-4, Vol. 16, 12-5
datafilling Vol. 11, 2-20, Vol. 11, 2-457, Vol. 11, 2-479, Vol. 12, 3-98, Vol. 12, 3-352, Vol. 12, 3-401, Vol. 12, 3-416, Vol. 12, 3-428, Vol. 12, 3-439, Vol. 13, 1-226, Vol. 14, 2-168, Vol. 14, 2-274, Vol. 15, 1-11, Vol. 15, 1-129, Vol. 15, 6-28
NETNAMES, table
datafilling Vol. 13, 3-21, Vol. 13, 4-28, Vol. 13, 4-108, Vol. 13, 4-137, Vol. 15, 7-14
routing Vol. 16, 13-15
network configuration
ACD with CCS7 Vol. 16, 12-1
ACD WITH PRI Vol. 16, 13-1
single-node example Vol. 16, 11-1
NOPADDR, table
datafilling Vol. 16, 11-15, Vol. 16, 12-23, Vol. 16, 13-26
NOPAPPLN, table
datafilling Vol. 16, 11-15, Vol. 16, 12-24, Vol. 16, 13-26
NPENDING, table
datafilling Vol. 15, 1-252
NSTAFAS, table
datafilling Vol. 12, 1-99

O

OCCNAME, table
datafilling Vol. 15, 1-157

OFCENG, table
datafilling Vol. 16, 11-9, Vol. 16, 12-13, Vol. 16, 13-16
office parameters
2-Way Digital FX Trunk - Business Services Vol. 11, 2-4
3-Way Conference/Transfer Vol. 11, 2-12
3WC Dial 0 for 608 Cord Board Vol. 11, 2-19
3WC/Call Transfer for UCD Vol. 11, 2-29
3WC/CXR to 2500 Set Call Waiting Interactions Vol. 11, 2-32
6 Port Conference Circuit Use Control Vol. 11, 2-36
A/C Activate/Deactivate of CFU/CFI Vol. 12, 3-7
AC to IBNISUP Interworking Vol. 12, 3-13
Access Feature Grouping Vol. 15, 4-33
Access to CCSA (BV0420) Vol. 11, 2-45
Access to CO from PBX Vol. 11, 2-51
Access to ETN Vol. 11, 2-61
Access to Special Service Facilities Vol. 11, 2-65
Account Codes Vol. 12, 3-20
ACD - Mgmt Rep 2 Way Data Stream Vol. 16, 2-72
ACD Access Feature Grouping Vol. 16, 2-5
ACD CompuCALL Vol. 16, 3-39
ACD Interaction with IVR Vol. 16, 2-31
ACD Night Service Call Queue Clearing Vol. 16, 2-83
ACD Nodal Treatment in NACD Vol. 16, 4-5
ACD on 2500 Set Vol. 16, 2-97
ACD Remote Load Management I Vol. 16, 2-111
ACD Supergroup Vol. 16, 4-21
ACD-Load Management III Vol. 16, 2-43
AC-Extended Calls to CFB/CFD Vol. 11, 2-40
ANI Information in SMDR Output Vol. 12, 3-30
ARS - (Basic) (BV0506) Vol. 12, 3-87
Attendant Call Detail Entry Vol. 12, 3-43
Attendant Call Park Recall Timer Vol. 11, 2-74
Attendant Call Selection Vol. 11, 2-78
Attendant Camp-On Vol. 11, 2-84
Attendant Conference (Maximum Six Conferees) Vol. 11, 2-93
Attendant Console Call Hold Recall Vol. 11, 2-103
Attendant Console Display Vol. 11, 2-113
Attendant Console End-to-End Signalling Vol. 11, 2-118
Attendant Console OM on an Individual Console Basis Vol. 12, 2-18
Attendant Control of Trunk Group Access Vol. 11, 2-125
Attendant Control of VFG Vol. 12, 3-53
Attendant Display of Queued Calls by ICI Key Vol. 11, 2-131
Attendant Locked Loop Operation Vol. 11, 2-139
Attendant Message Waiting Vol. 12, 3-65
Attendant Release Upon Completion of Dialing Vol. 11, 2-142
Attendant Set Up Conference
10 or More Conferees Vol. 12, 3-74
Attendant Speed Calling Vol. 11, 2-148
Attendant to Recorded Announcement Vol. 11, 2-153
Attendant to UCD Vol. 11, 2-158
Attendant Transfer Vol. 11, 2-167
Attendent - Auto Dial Vol. 11, 2-70
Audio Input on Incoming Calls in Queue (BV0602) Vol. 11, 2-172
Audio Interlude (BC0946) Vol. 11, 2-182
Audio Table Expansion (AD0822) Vol. 11, 2-193
Authcode for MDR Vol. 14, 4-15
Authorization Codes (BV0494) Vol. 12, 3-82
Automatic Intercept System (AIS) Enhancement Vol. 11, 2-202
Automatic Line Vol. 11, 2-217
Automatic Line and MADN Vol. 14, 2-5
Automatic Recall Vol. 11, 2-222
Base ACD Vol. 16, 2-168
Bellcore AMA Enhanced Automatic Route Selection Translations Vol. 14, 4-23
Blind Transfer Recall Vol. 11, 2-239
Blind Transfer Recall Identification Vol. 11, 2-250
Block Calling Name/Number Delivery Blocking per Call Vol. 15, 7-10

BOC AMA Call Code 032 Vol. 14, 4-31
BR0747 CCSA VFG Option Vol. 15, 1-3
Business Set Busy Indicator Vol. 14, 2-14
Business Set Call Waiting Originate Vol. 14, 2-20
Business Set Dial Call Waiting Vol. 14, 2-31
Busy Verification - Stations Vol. 11, 2-263
Busy Verification - Trunks Vol. 11, 2-275
Call Back Queuing (Basic) Vol. 12, 3-96
Call Forcing Tone Optionality Vol. 16, 2-214
Call Forward All Calls Vol. 11, 2-289
Call Forward Busy Vol. 11, 2-298
Call Forward Busy - Inhibit Make & Inhibit Line Busy Vol. 12, 3-110
Call Forward Busy/Don't Answer - Internal/External Vol. 12, 3-127
Call Forward Do Not Answer and Call Waiting Interaction Vol. 11, 2-328, Vol. 12, 3-143
Call Forward No Answer Vol. 11, 2-312
Call Forward Prevention Enhancements Vol. 12, 3-161
Call Forward Timed Vol. 12, 3-188
Call Forward/Automatic Dial Display Vol. 14, 2-40
Call Forwarding of Call Waiting Calls Vol. 12, 3-197
Call Hold Vol. 11, 2-341
Call Park Vol. 11, 2-354
Call Park Recall Identification Vol. 14, 3-9
Call Pickup Vol. 11, 2-368
Call Pickup Transparency Vol. 11, 2-374
Call Request Call Processing Enhancements Vol. 11, 2-377, Vol. 12, 3-202
Call Request Retrieve/Key Short Hunt Interaction Control Vol. 12, 3-205
Call Transfer Enhancement Vol. 11, 2-385
Call Waiting Vol. 11, 2-398
Call Waiting - Originating Vol. 11, 2-416
Call waiting 1A transparency issues Vol. 12, 3-212
Call Waiting for 3-Way Calling Vol. 11, 2-406
Calling Name Delivery on MADN (CNAMD on MADN) Vol. 13, 2-6
Calling Name Inspect Key Vol. 15, 2-22
Calling Name/Number Delivery Blocking (CNNB) Vol. 15, 7-26
Calling Number and NCOS Display on Attendant Console Vol. 13, 4-27
Camp On with Music Vol. 11, 2-427
CCSA Line Option Vol. 14, 4-35
CFBL Inhibit Line Busy/Inhibit MB Enhancements Vol. 12, 3-225
CFD from Hunt Group Station Vol. 11, 2-434
CFD Interaction with Three-Way Calling Vol. 11, 2-444
CFGDA for Hunt Groups Vol. 11, 2-449
CFW for MADN Secondary Members Vol. 14, 3-20
Change EBS Features During Talking State Vol. 12, 3-231
Change Line Class Codes via SERVORD Vol. 12, 3-257
Class of Service Restrictions Vol. 11, 2-457
CLASS on MBS/MADN Base Vol. 13, 2-17
CLASS on MDC Base Vol. 13, 2-48
Class on MVP Base Vol. 13, 2-74
CLEN for EBS Vol. 12, 3-278
Code Call Access Vol. 11, 2-463
Code Calling - Line Termination Vol. 11, 2-471
Code Restriction Vol. 11, 2-479
CompuCALLEnhancements-Screen-Assisted Telephony Vol. 16, 3-135
CompuCALL Integration with ICCM Vol. 16, 7-17
CompuCALL Transport Enhancements Vol. 16, 5-18
Conference Join Vol. 11, 2-489
Control of Multiple Call Forwarding Vol. 12, 3-288
COT Enhancement Vol. 13, 2-84
CPU Datafill Enhancements Vol. 11, 2-495
Customer Administration of Data Vol. 14, 4-42
Customer Dialed Account Recording (CDAR) Vol. 14, 4-60
Customer Group Transparency Vol. 11, 2-501
Customer Network Data Changes Vol. 14, 4-75
Customer Screening at the Trunk Test Position Vol. 14, 4-90

Customer Service Change Via SERVORD Vol. 14, 4-100
Cut Through Dialing Vol. 12, 3-299
Cut Thru and Thru Dialing Interaction Vol. 12, 3-304
Cut Thru Dialing for IBN Lines & A/C Vol. 12, 3-312
Denied Incoming Vol. 11, 2-510
Dial - Call Waiting Vol. 11, 2-523
Dialtone Passback via PX Trunks for MDC Vol. 12, 3-319
Dictation Access and Control (DTMF Only) Vol. 11, 2-533
Direct Inward Dialing (DID) Vol. 14, 4-108
Direct Inward System Access (DISA) Vol. 12, 3-330
Direct Outward Dialing (DOD) Vol. 11, 2-538
Direct Station Selection/Busy Lamp Field for MBS Vol. 15, 3-16
Directed Call Park Vol. 11, 2-547
Directed Call Pickup - Barge In Vol. 11, 2-557
Directed Call Pickup - Non Barge In Vol. 11, 2-567
DISA
Invalid Authcode Treatment Option Vol. 12, 3-340
DISA - Remove Auth Code Timeout Vol. 12, 3-345
DISA Enhancements Vol. 12, 3-333
DISA Third Dial Tone Vol. 12, 3-351
Display Called About Number Vol. 16, 2-233
Distinctive and Ring Again Ringing Vol. 11, 2-572
Distinctive Call Waiting Ringback Vol. 12, 3-358
Distinctive Call Waiting Tones Vol. 11, 2-577
Distinctive Ringing Vol. 11, 2-584
Distinctive Ringing Enhancements Vol. 11, 2-596
Do Not Disturb Vol. 12, 2-24
DT after CFW Cancel and Spd Call Programming Vol. 12, 3-371
DTMF Outpulsing on a Line Vol. 11, 2-614
Dynamic Measurements Vol. 12, 2-33
E911 Single Button Transfer Operation Vol. 15, 3-25
EAEO - IBN PIC Using SERVORD Vol. 12, 3-377
EBS as a Message Center Vol. 14, 2-44
EBS as a Message Center - Enhancements Vol. 14, 2-58
EBS Call Forwarding on a per Key Basis Vol. 14, 3-45
ECM/SCAI Support for Non-ACD - Ph 1 Vol. 16, 3-150
End to End Signalling via Speed Call Vol. 11, 2-625
Enhanced EBS Reason Display Vol. 14, 2-85
Enhanced Handling of ACD Re-Enqueued Calls Vol. 16, 2-255
Enhanced MADN Call Control Vol. 14, 3-79
Enhanced SERVORD II Vol. 12, 3-390
ERWT for Lines, Trunks for ARS, Call Back Queue Features Vol. 12, 3-398
ESN - Answer Supervision Generation Vol. 12, 3-405
ESN - Authorization Codes Vol. 12, 3-411
ESN - Call-Back Queuing Vol. 12, 3-426
ESN - Network Automatic Route Selection (TEHO and HEHO) Vol. 15, 1-9
ESN - Network Class of Service Vol. 15, 1-25
ESN - Network Information Signals Vol. 15, 1-34
ESN - Network Speed Call Vol. 15, 1-55
ESN - Off-hook Queuing Vol. 12, 3-435
Executive Message Service Enhancement - Multi EMW per DN Vol. 14, 2-93
Executive Right of Way Vol. 11, 2-632
Fast Transfer for Meridian Business Set Vol. 15, 3-36
Flexible Console Alerting Vol. 11, 2-642
Flexible Display Language Vol. 12, 2-39
Flexible Intercept Vol. 11, 2-649
Flexible Station Controlled Conference (500/2500 Sets) Vol. 12, 3-451
Forced Announcements for NACD Vol. 16, 4-36
Generalized Distinctive Ringing Vol. 11, 2-653
Group Intercom All Call Vol. 14, 3-98

Group Number Feature Control Vol. 13, 1-17
IBN - Optional Call Forward Links Vol. 13, 1-78
IBN & ESB Compatibility Vol. 13, 1-76
IBN Auth Codes for Alternate Route Selection (ARS) Vol. 13, 1-46
IBN Call Forward Enhancements Vol. 13, 1-52
IBN Call Forward Validation Vol. 11, 2-666
IBN Cancel Call Waiting Vol. 11, 2-670
IBN Class 5 INWATS Vol. 13, 1-58
IBN Class 5 Psuedo OUTWATS Vol. 13, 1-65
IBN Feature Activation OMs I Vol. 11, 2-679
IBN ISUP NETINFO Translations Vol. 13, 3-16
IBN LCC Compatibility with FRO Line Option Vol. 11, 2-685
IBN Outpulsing to POTS Trunks Vol. 11, 2-703
IBN Quantity Control (100 Lines) Vol. 11, 2-706
IBN Trunks with ISUP Signalling Vol. 13, 1-96
IBNRTE Table Capacity Increase Vol. 11, 2-708
ICM Configuration Management Vol. 16, 9-33
ICM Message Waiting Activation/Deactivation Vol. 16, 9-54
ICM Variable Wrap Reporting Vol. 16, 9-103
IDDD via ARS Vol. 15, 1-128
Immediate Answer Reporting for IBN Vol. 11, 2-716
Immediate Notification of Priority Enqueued Calls Vol. 12, 2-46
Increase Auth Codes per Customer Group Vol. 13, 1-110
Increase in Number of IBN Customer Groups Vol. 11, 2-719
Increase Number of Equivalent DN Appearances for IBN Vol. 11, 2-725
Individual Page from GIC Vol. 14, 3-105
Interactive Display Menu on MBS Sets Vol. 15, 3-56
Interposition Calls and Transfers Vol. 11, 2-730
INWATS to Direct Inward System Access Vol. 13, 1-114
ISUP Shared Trunking Enhancement Vol. 13, 3-37
Killer Trunk Report Separation Vol. 15, 1-137
Last Number Redial (LNR) Vol. 12, 1-3
Last Number Redial from Set Vol. 14, 3-114
Lockout Vol. 12, 1-17
Loud Speaker & Radio Paging Access Vol. 12, 1-21
Loudspeaker Paging - Line Termination Vol. 12, 1-28
M5209 Introduction Vol. 14, 2-100
MACD Nodal Service Observing Vol. 16, 2-271
MACD PIN Configuration and Control Vol. 16, 2-285
MADN and Conference Interaction Vol. 12, 1-36
MADN Bridging - 3 Way Call Vol. 14, 3-120
MADN Cut-off on Disconnect (COD) Vol. 14, 3-131
MADN Ring Forward Vol. 14, 3-142
MADN Service Orders Vol. 14, 2-114
Make Set Busy Except GIC Vol. 14, 3-156
MAP Alarm Level Screening Vol. 15, 1-148
MAP Display for Attendant OM Vol. 12, 1-39
MBG Alternate Terminating Number Billing Vol. 13, 3-48
MBG Enabling of Feature Networking Vol. 13, 3-55
MBG Feature Networking Control Vol. 13, 3-60
MBG II - Support of IBN7 Trunk Features Vol. 13, 3-72
MBG III - Support of Private Numbering Plan Vol. 13, 3-84
MBG IV - Support of Network EMW Vol. 13, 3-116
MBG Redirection Enhancements for ISUP IBN Trunks Vol. 13, 4-38
MBS 30-Port Conference Vol. 12, 1-48
MBS Auto Answer Back Vol. 14, 2-132
MBS Automatic Dial Vol. 14, 2-140
MBS Automatic Line Vol. 14, 2-145

MBS Busy Override Vol. 14, 2-153
MBS Call Back Queuing Vol. 14, 2-167
MBS Call Forward All Calls Feature Key S/W Vol. 14, 2-182
MBS Call Park Vol. 14, 2-198
MBS Call Pickup Feature Key S/W Vol. 14, 2-213
MBS Call Waiting Vol. 14, 2-223
MBS Display Called Number Vol. 14, 2-229
MBS Display Calling Number Vol. 14, 2-237
MBS End to End Signalling Vol. 14, 2-242
MBS Feature Code Access Vol. 14, 2-246
MBS Feature Display Vol. 14, 2-253
MBS Group Intercom Vol. 14, 2-262
MBS Held Calls Vol. 14, 2-266
MBS II Templates Vol. 14, 2-121
MBS Individual Business Line Vol. 14, 2-272
MBS Intercom Vol. 14, 2-284
MBS Listen on Hold Vol. 14, 2-288
MBS MADN SCA/MCA (across Switch) Vol. 14, 2-293
MBS Make Set Busy Vol. 14, 2-301
MBS Malicious Call Hold Vol. 14, 2-311
MBS Message Waiting Vol. 13, 1-126
MBS Onhook Dialing Vol. 14, 2-315
MBS Power Feature - Name Programming Vol. 15, 3-69
MBS Privacy Release (across Switch) Vol. 14, 2-320
MBS Query Time Key Vol. 14, 2-330
MBS Ring-Again Feature Key S/W Vol. 14, 2-337
MBS Speed Calling Feature Key S/W Vol. 14, 2-346
MBS Three-Way Calling Transfer Vol. 14, 2-358
MDC AFG Add Option Vol. 15, 4-80
MDC Circuit Test Enhancement Vol. 14, 2-369
MDC Copy Feature Set Vol. 15, 4-65
MDC CUSTENG Robustness Vol. 12, 1-52
MDC DSS/BLF Set Based Vol. 15, 5-18
MDC Enhanced WATS Vol. 15, 1-156
MDC MBS Interactive Display Vol. 15, 4-92
MDC Single Button Transfer Vol. 15, 3-78
MDC Single Line Queue Vol. 15, 5-30
MDC to 10-digit routing Vol. 15, 10-8
MDC to Universal routing Vol. 15, 11-9
MDC Variable CDAR Vol. 13, 1-137
MDR Data in the AMA Stream Vol. 15, 1-208
Meet Me Page Vol. 13, 1-169
Meet-Me Conference Vol. 12, 1-62
Meet-Me Conference Feature Expansion Vol. 13, 1-155
Message Service - Leave Message Vol. 14, 2-384
Message Service - List Management Vol. 14, 2-402
Message Waiting Lamp Update - Link Phone Vol. 13, 1-178
Multi-location Business Group I Vol. 13, 3-125
Multipilot Directory Numbers on MLH Group Vol. 15, 1-221
Multiple Position Hunt with Queue Vol. 13, 1-194
Music on Hold for EBS Vol. 14, 3-170
MVP Dial Plan Vol. 12, 1-71
Name Display for MADN Members Vol. 14, 3-187
NAS Features Optionality Vol. 13, 4-40
Network Access Registers (NARS) Vol. 15, 6-19
Network Attendant Control Vol. 13, 4-47
Network Attendant Recall Vol. 13, 4-51
Network Camp-On-II Vol. 13, 4-55
Network Dial Plan Display Vol. 13, 4-60
Network Display Enhancement Vol. 13, 4-80
Network Feature Access Restriction Vol. 15, 8-10
Network Intelligent Call Management Vol. 16, 7-32
Network Message Waiting Indicator (MWI) Vol. 13, 4-88
Network Name Display Vol. 13, 4-107
Network Name Display for Attendant Consoles Vol. 13, 4-136
Network Wide Ring Again Vol. 13, 4-160
Networked ACD on CCS7 Vol. 16, 4-51
Networked ACD on PRA Vol. 16, 4-66
Networked EBS Display Vol. 13, 4-171
Night Service - Flexible Vol. 12, 1-81

Night Service Trunk Answer from Any Station - Fixed Vol. 12, 1-88
Night Service Trunk Answer From Any Station - TAFAS Vol. 12, 1-95
Non-Data Link Console Call Extension Vol. 13, 1-215
Off-hook Queuing Vol. 13, 1-221
OHQ, CBQ for OUTWATS VFG Vol. 13, 1-229
Optional Answer Supervision from Attendant Queue Vol. 12, 1-104
Originating/Terminating Line Select (TLS) Vol. 14, 3-199
Outgoing Restriction Control Vol. 15, 1-233
Override ACR for CFU Vol. 12, 1-111
Patch Source Inclusion I Vol. 12, 1-119
Patch Source Inclusion II Vol. 12, 1-130
Peg Counts on LDNs on Attendant Consoles Vol. 12, 2-50
Pending Order File (POF) Enhancements Vol. 15, 1-249
Permanent Hold (500/2500 Sets) Vol. 12, 1-141
Personal Call Screening of Call Forwarding Vol. 13, 1-242
PF Robustness - Call Forwarding per Key (CFK) Vol. 15, 4-110
PF Robustness - Call Pickup Separate Keys Compatibility Vol. 15, 4-135
Position Busy Vol. 12, 1-150
Power Feature Audit Trails Vol. 15, 3-91
Power Features Enhancements I Vol. 15, 3-121
Power Features Installer Application Vol. 15, 3-141
Preset Conference Vol. 13, 1-250
Preset Conference (Large) Vol. 15, 1-262
Query Functional Station Grouping Vol. 12, 1-157
Queueing OMs per Route Vol. 13, 1-274
Remove Timeout between Authcode/Secondary Dial Tone Vol. 13, 1-278
Repeated Alert for MBS Vol. 14, 3-209
Ring Again Vol. 12, 1-163
Ring Again Cancellation Timer Vol. 12, 1-170
Ring Again on Hunt Groups Vol. 12, 1-177
Ring Reminder Off/On Option per Line Vol. 13, 1-306
RLT with No Third Party Interaction Vol. 14, 1-7
Second and Third Delay Announcements Vol. 12, 1-187
Secrecy Vol. 12, 1-194
Semi-restricted Incoming Lines Call Intercept Vol. 12, 1-202
Separate SMDR Output Files by Cust Group Vol. 13, 1-311
Series completion Vol. 15, 1-280
Series completion enhancements Vol. 15, 1-286
Service Analysis for IBN Vol. 15, 1-292
SERVORD cleanup for MBS Vol. 14, 2-406
Setting Attendant Recall Timers to Zero Vol. 12, 1-208
Short Hunt on MBS Vol. 14, 2-419
Simplified Dialing Vol. 12, 1-212
SLE on MBS/MADN Vol. 13, 2-95
SLE on MDC Vol. 13, 2-123
SMDR Derived from Bellcore AMA Record Vol. 15, 1-294
SMDR for ONI Lines Vol. 13, 1-321
Special Intercept Through Service Orders Vol. 12, 1-236
Specific Key Ringback on Ring Again Request on EBS Vol. 14, 3-216
Speed Calling Group - Long List Vol. 12, 1-243
Speed Calling Individual - Short List Vol. 12, 1-251
Station Activated DND with Feature Active Reminder Vol. 12, 1-259
Station Activation of CFB/CFD Vol. 13, 1-330
Station Camp On for Meridian Business Set Vol. 15, 2-46
Station Message Detail Recording Vol. 13, 1-340
Station Message Waiting Vol. 13, 1-349
Station Specific Auth Codes Vol. 13, 1-358
Station Specific Authcode - CDC Enhancements Vol. 13, 1-367
Storing of 24 Dialed Digits Vol. 12, 1-265

Stuttered Dial Tone for Message Waiting Vol. 13, 1-374
Supervisory Console (Basic) Vol. 13, 1-379
Suspend and Restore Remote Call Forward Lines Vol. 13, 1-382
Teen Service on MDC Vol. 13, 2-132
Terminating Billing Option Vol. 15, 1-304
TGB/TAC Access thru Special Keys Vol. 12, 1-269
Through Dialing Vol. 12, 1-274
Time of Day NCOS Vol. 15, 1-314
Time of Day Routing Vol. 15, 1-325
Trouble Key on IBN Console Vol. 12, 1-277
Trunk Busy Verify Tone Vol. 12, 1-287
TVDS - II Vol. 15, 1-335
Two-Way Splitting Vol. 12, 1-293
UCD Night Service Invocation Enhancements Vol. 12, 1-297
UCD on EBS and UCD SD Point Vol. 15, 1-347
UCD Queue Status Lamp Vol. 12, 1-303
Uniform Call Distribution (to 500/2500 Telephone Sets) Vol. 12, 1-315
Uniform Call Distribution from Queue Vol. 12, 1-326
Variable Length/Same Leading Digit(s) Translation Vol. 12, 1-331
Variable Speed Call Access Code Vol. 12, 1-344
Variable Stutter Dial Tone Vol. 13, 1-387
Variable Types of Outpulsing on Same Call Vol. 12, 1-351
VFG INWATS Ovfl Totals to AMA Tape - IBN Vol. 13, 1-395
VFG Look Ahead Vol. 13, 1-401
VFG Usage Data Vol. 13, 1-405
Virtual Access to Private Networks Vol. 14, 1-89
VMX Interface Vol. 15, 1-367
Wild Card Key Vol. 12, 1-355
OFRT, table
datafilling Vol. 11, 2-209, Vol. 12, 3-87, Vol. 12, 3-371
operation
2-Way Digital FX Trunk - Business Services Vol. 11, 2-2
3-Way Conference/Transfer Vol. 11, 2-8
3WC Dial 0 for 608 Cord Board Vol. 11, 2-16
3WC/Call Transfer for UCD Vol. 11, 2-22
3WC/CXR to 2500 Set Call Waiting Interactions Vol. 11, 2-30
6 Port Conference Circuit Use Control Vol. 11, 2-35
A/C Activate/Deactivate of CFU/CFI Vol. 12, 3-2
AC to IBNISUP Interworking Vol. 12, 3-11
Access Feature Grouping Vol. 15, 4-17
Access to CCSA (BV0420) Vol. 11, 2-44
Access to CO from PBX Vol. 11, 2-50
Access to ETN Vol. 11, 2-57
Access to Special Service Facilities Vol. 11, 2-64
Account Codes Vol. 12, 3-16
ACD - Mgmt Rep 2 Way Data Stream Vol. 16, 2-65
ACD Access Feature Grouping Vol. 16, 2-2
ACD Interaction with IVR Vol. 16, 2-30
ACD Night Service Call Queue Clearing Vol. 16, 2-79
ACD Nodal Treatment in NACD Vol. 16, 4-2
ACD on 2500 Set Vol. 16, 2-86
ACD Remote Load Management I Vol. 16, 2-107
ACD Supergroup Vol. 16, 4-11
ACD-Load Management III Vol. 16, 2-38
AC-Extended Calls to CFB/CFD Vol. 11, 2-39
ANI Information in SMDR Output Vol. 12, 3-25
ARS - (Basic) (BV0506) Vol. 12, 3-86
Attendant Call Detail Entry Vol. 12, 3-37
Attendant Call Park Recall Timer Vol. 11, 2-72
Attendant Call Selection Vol. 11, 2-77
Attendant Camp-On Vol. 11, 2-80
Attendant Conference (Maximum Six Conferees) Vol. 11, 2-89
Attendant Console Call Hold Recall Vol. 11, 2-100
Attendant Console Display Vol. 11, 2-105
Attendant Console End-to-End Signalling Vol. 11, 2-114

Attendant Console OM on an Individual Console Basis Vol. 12, 2-2
Attendant Control of Trunk Group Access Vol. 11, 2-122
Attendant Control of VFG Vol. 12, 3-48
Attendant Display of Queued Calls by ICI Key Vol. 11, 2-127
Attendant Locked Loop Operation Vol. 11, 2-136
Attendant Message Waiting Vol. 12, 3-57
Attendant Release Upon Completion of Dialing Vol. 11, 2-140
Attendant Set Up Conference
10 or More Conferees Vol. 12, 3-70
Attendant Speed Calling Vol. 11, 2-144
Attendant to Recorded Announcement Vol. 11, 2-152
Attendant to UCD Vol. 11, 2-154
Attendant Transfer Vol. 11, 2-166
Attendent - Auto Dial Vol. 11, 2-66
Audio Input on Incoming Calls in Queue (BV0602) Vol. 11, 2-170
Audio Interlude (BC0946) Vol. 11, 2-180
Audio Table Expansion (AD0822) Vol. 11, 2-192
Authcode for MDR Vol. 14, 4-12
Authorization Codes (BV0494) Vol. 12, 3-81
Automatic Intercept System (AIS) Enhancement Vol. 11, 2-196
Automatic Line Vol. 11, 2-216
Automatic Line and MADN Vol. 14, 2-2
Automatic Recall Vol. 11, 2-219
Base ACD Vol. 16, 2-114
Bellcore AMA Enhanced Automatic Route Selection Translations Vol. 14, 4-18
Blind Transfer Recall Vol. 11, 2-231
Blind Transfer Recall Identification Vol. 11, 2-244
Block Calling Name/Number Delivery Blocking per Call Vol. 15, 7-3
BOC AMA Call Code 032 Vol. 14, 4-30
BR0747 CCSA VFG Option Vol. 15, 1-2
Business Set Busy Indicator Vol. 14, 2-8
Business Set Call Waiting Originate Vol. 14, 2-17
Business Set Dial Call Waiting Vol. 14, 2-25
Busy Verification - Stations Vol. 11, 2-258
Busy Verification - Trunks Vol. 11, 2-269
Call Back Queuing (Basic) Vol. 12, 3-93
Call Forcing Tone Optionality Vol. 16, 2-209
Call Forward All Calls Vol. 11, 2-284
Call Forward Busy Vol. 11, 2-293
Call Forward Busy - Inhibit Make & Inhibit Line Busy Vol. 12, 3-100
Call Forward Busy/Don't Answer - Internal/External Vol. 12, 3-117
Call Forward Do Not Answer and Call Waiting Interaction Vol. 11, 2-321, Vol. 12, 3-136
Call Forward Indication Vol. 15, 9-2
Call Forward No Answer Vol. 11, 2-304
Call Forward Prevention Enhancements Vol. 12, 3-149
Call Forward Timed Vol. 12, 3-178
Call Forward/Automatic Dial Display Vol. 14, 2-38
Call Forwarding of Call Waiting Calls Vol. 12, 3-191
Call Hold Vol. 11, 2-335
Call Park Vol. 11, 2-348
Call Park Recall Identification Vol. 14, 3-2
Call Pickup Vol. 11, 2-364
Call Pickup Transparency Vol. 11, 2-373
Call Request Call Processing Enhancements Vol. 11, 2-376, Vol. 12, 3-201
Call Request Retrieve/Key Short Hunt Interaction Control Vol. 12, 3-203
Call Transfer Enhancement Vol. 11, 2-378
Call Waiting Vol. 11, 2-391
Call Waiting - Originating Vol. 11, 2-411
Call waiting 1A transparency issues Vol. 12, 3-208
Call Waiting for 3-Way Calling Vol. 11, 2-404
Calling Name Delivery on MADN (CNAMD on MADN) Vol. 13, 2-3
Calling Name Inspect Key Vol. 15, 2-2
Calling Name/Number Delivery Blocking (CNNB) Vol. 15, 7-22
Calling Number and NCOS Display on Attendant Console Vol. 13, 4-3
Camp On with Music Vol. 11, 2-422
CCSA Line Option Vol. 14, 4-34
CFBL Inhibit Line Busy/Inhibit MB Enhancements Vol. 12, 3-215

CFD from Hunt Group Station Vol. 11, 2-432
CFD Interaction with Three-Way Calling Vol. 11, 2-441
CFGDA for Hunt Groups Vol. 11, 2-445
CFW for MADN Secondary Members Vol. 14, 3-18
Change EBS Features During Talking State Vol. 12, 3-230
Change Line Class Codes via SERVORD Vol. 12, 3-239
Class of Service Restrictions Vol. 11, 2-456
Class on MVP Base Vol. 13, 2-67
CLEN for EBS Vol. 12, 3-272
Code Call Access Vol. 11, 2-461
Code Calling - Line Termination Vol. 11, 2-467
Code Restriction Vol. 11, 2-477
CompuCALLEnhancements-Screen-Assisted Telephony Vol. 16, 3-123
CompuCALL Integration with ICCM Vol. 16, 7-3
CompuCALL Transport Enhancements Vol. 16, 5-12
Conference Join Vol. 11, 2-485
Control of Multiple Call Forwarding Vol. 12, 3-282
COT Enhancement Vol. 13, 2-76
CPU Datafill Enhancements Vol. 11, 2-493
Customer Administration of Data Vol. 14, 4-38
Customer Dialed Account Recording (CDAR) Vol. 14, 4-57
Customer Group Transparency Vol. 11, 2-500
Customer Network Data Changes Vol. 14, 4-68
Customer Screening at the Trunk Test Position Vol. 14, 4-87
Customer Service Change Via SERVORD Vol. 14, 4-93
Cut Through Dialing Vol. 12, 3-296
Cut Thru and Thru Dialing Interaction Vol. 12, 3-303
Cut Thru Dialing for IBN Lines & A/C Vol. 12, 3-309
Denied Incoming Vol. 11, 2-505
Dial - Call Waiting Vol. 11, 2-517
Dialtone Passback via PX Trunks for MDC Vol. 12, 3-316
Dictation Access and Control (DTMF Only) Vol. 11, 2-529
Direct Inward Dialing (DID) Vol. 14, 4-107
Direct Inward System Access (DISA) Vol. 12, 3-327
Direct Outward Dialing (DOD) Vol. 11, 2-536
Direct Station Selection/Busy Lamp Field for MBS Vol. 15, 3-2
Directed Call Park Vol. 11, 2-541
Directed Call Pickup - Barge In Vol. 11, 2-553
Directed Call Pickup - Non Barge In Vol. 11, 2-563
DISA
Invalid Authcode Treatment Option Vol. 12, 3-338
DISA - Remove Auth Code Timeout Vol. 12, 3-344
DISA Enhancements Vol. 12, 3-333
DISA Third Dial Tone Vol. 12, 3-350
Display Called About Number Vol. 16, 2-223
Distinctive and Ring Again Ringing Vol. 11, 2-571
Distinctive Call Waiting Ringback Vol. 12, 3-356
Distinctive Call Waiting Tones Vol. 11, 2-576
Distinctive Ringing Vol. 11, 2-583
Distinctive Ringing Enhancements Vol. 11, 2-588
Do Not Disturb Vol. 12, 2-21
DT after CFW Cancel and Spd Call Programming Vol. 12, 3-369
DTMF Outpulsing on a Line Vol. 11, 2-606
Dynamic Measurements Vol. 12, 2-29
E911 Single Button Transfer Operation Vol. 15, 3-21
EAEO - IBN PIC Using SERVORD Vol. 12, 3-374
EBS as a Message Center Vol. 14, 2-42
EBS as a Message Center - Enhancements Vol. 14, 2-47
EBS Call Forwarding on a per Key Basis Vol. 14, 3-26

ECM/SCAI Support for Non-ACD - Ph 1 Vol. 16, 3-144
End to End Signalling via Speed Call Vol. 11, 2-618
Enhanced EBS Reason Display Vol. 14, 2-63
Enhanced Handling of ACD Re-Enqueued Calls Vol. 16, 2-239
Enhanced MADN Call Control Vol. 14, 3-54
Enhanced SERVORD II Vol. 12, 3-386
ERWT for Lines, Trunks for ARS, Call Back Queue Features Vol. 12, 3-396
ESN - Answer Supervision Generation Vol. 12, 3-403
ESN - Authorization Codes Vol. 12, 3-410
ESN - Call-Back Queuing Vol. 12, 3-421
ESN - Network Automatic Route Selection (TEHO and HEHO) Vol. 15, 1-8
ESN - Network Class of Service Vol. 15, 1-24
ESN - Network Information Signals Vol. 15, 1-29
ESN - Network Speed Call Vol. 15, 1-54
ESN - Off-hook Queuing Vol. 12, 3-432
Executive Message Service Enhancement - Multi EMW per DN Vol. 14, 2-91
Executive Right of Way Vol. 11, 2-628
Fast Transfer for Meridian Business Set Vol. 15, 3-29
Flexible Console Alerting Vol. 11, 2-638
Flexible Display Language Vol. 12, 2-34
Flexible Intercept Vol. 11, 2-648
Flexible Station Controlled Conference (500/2500 Sets) Vol. 12, 3-441
Forced Announcements for NACD Vol. 16, 4-29
Generalized Distinctive Ringing Vol. 11, 2-651
Group Intercom All Call Vol. 14, 3-90
Group Number Feature Control Vol. 13, 1-3
IBN - Optional Call Forward Links Vol. 13, 1-77
IBN & ESB Compatibility Vol. 13, 1-73
IBN Auth Codes for Alternate Route Selection (ARS) Vol. 13, 1-42
IBN Call Forward Enhancements Vol. 13, 1-51
IBN Call Forward Validation Vol. 11, 2-658
IBN Cancel Call Waiting Vol. 11, 2-668
IBN Class 5 INWATS Vol. 13, 1-56
IBN Class 5 Psuedo OUTWATS Vol. 13, 1-63
IBN Feature Activation OMs I Vol. 11, 2-674
IBN ISUP NETINFO Translations Vol. 13, 3-2
IBN LCC Compatibility with FRO Line Option Vol. 11, 2-680
IBN Outpulsing to POTS Trunks Vol. 11, 2-700
IBN Quantity Control (100 Lines) Vol. 11, 2-705
IBN Trunks with ISUP Signalling Vol. 13, 1-80
IBNRTE Table Capacity Increase Vol. 11, 2-707
ICM Configuration Management Vol. 16, 9-30
ICM Message Waiting Activation/Deactivation Vol. 16, 9-50
ICM TAPI Extensions Vol. 16, 9-65
ICM Three-Way Call Enhanced Status Reporting Vol. 16, 9-81
ICM Variable Wrap Reporting Vol. 16, 9-97
ICM Workqueue Re-Engineering Vol. 16, 9-106
IDDD via ARS Vol. 15, 1-89
Immediate Answer Reporting for IBN Vol. 11, 2-714
Immediate Notification of Priority Enqueued Calls Vol. 12, 2-45
Increase Auth Codes per Customer Group Vol. 13, 1-109
Increase in Number of IBN Customer Groups Vol. 11, 2-717
Increase Number of Equivalent DN Appearances for IBN Vol. 11, 2-722
Individual Page from GIC Vol. 14, 3-101
Interactive Display Menu on MBS Sets Vol. 15, 3-45
Interposition Calls and Transfers Vol. 11, 2-726
INWATS to Direct Inward System Access Vol. 13, 1-112
ISUP Shared Trunking Enhancement Vol. 13, 3-25

Killer Trunk Report Separation Vol. 15, 1-134
Last Number Redial (LNR) Vol. 12, 1-2
Last Number Redial from Set Vol. 14, 3-110
Lockout Vol. 12, 1-16
Loud Speaker & Radio Paging Access Vol. 12, 1-19
Loudspeaker Paging - Line Termination Vol. 12, 1-25
MACD Nodal Service Observing Vol. 16, 2-261
MACD PIN Configuration and Control Vol. 16, 2-276
MADN and Conference Interaction Vol. 12, 1-32
MADN Bridging - 3 Way Call Vol. 14, 3-117
MADN Cut-off on Disconnect (COD) Vol. 14, 3-121
MADN Ring Forward Vol. 14, 3-136
MADN Service Orders Vol. 14, 2-111
Make Set Busy Except GIC Vol. 14, 3-149
MAP Alarm Level Screening Vol. 15, 1-145
MAP Display for Attendant OM Vol. 12, 1-37
MBG Alternate Terminating Number Billing Vol. 13, 3-46
MBG Enabling of Feature Networking Vol. 13, 3-51
MBG Feature Networking Control Vol. 13, 3-57
MBG II - Support of IBN7 Trunk Features Vol. 13, 3-63
MBG III - Support of Private Numbering Plan Vol. 13, 3-75
MBG IV - Support of Network EMW Vol. 13, 3-110
MBG Redirection Enhancements for ISUP IBN Trunks Vol. 13, 4-33
MBS 30-Port Conference Vol. 12, 1-40
MBS Auto Answer Back Vol. 14, 2-130
MBS Automatic Dial Vol. 14, 2-136
MBS Automatic Line Vol. 14, 2-143
MBS Busy Override Vol. 14, 2-148
MBS Call Back Queuing Vol. 14, 2-161
MBS Call Forward All Calls Feature Key S/W Vol. 14, 2-178
MBS Call Park Vol. 14, 2-189
MBS Call Pickup Feature Key S/W Vol. 14, 2-209
MBS Call Waiting Vol. 14, 2-218
MBS Display Called Number Vol. 14, 2-226
MBS Display Calling Number Vol. 14, 2-233
MBS End to End Signalling Vol. 14, 2-241
MBS Feature Code Access Vol. 14, 2-243
MBS Feature Display Vol. 14, 2-248
MBS Group Intercom Vol. 14, 2-257
MBS Held Calls Vol. 14, 2-265
MBS II Templates Vol. 14, 2-119
MBS Individual Business Line Vol. 14, 2-267
MBS Intercom Vol. 14, 2-280
MBS Listen on Hold Vol. 14, 2-287
MBS MADN SCA/MCA (across Switch) Vol. 14, 2-289
MBS Make Set Busy Vol. 14, 2-297
MBS Malicious Call Hold Vol. 14, 2-308
MBS Message Waiting Vol. 13, 1-123
MBS Onhook Dialing Vol. 14, 2-314
MBS Power Feature - Name Programming Vol. 15, 3-62
MBS Privacy Release (across Switch) Vol. 14, 2-316
MBS Query Time Key Vol. 14, 2-328
MBS Ring-Again Feature Key S/W Vol. 14, 2-333
MBS Speed Calling Feature Key S/W Vol. 14, 2-342
MBS Three-Way Calling Transfer Vol. 14, 2-355
MDC AFG Add Option Vol. 15, 4-71
MDC Circuit Test Enhancement Vol. 14, 2-361
MDC Copy Feature Set Vol. 15, 4-58
MDC CUSTENG Robustness Vol. 12, 1-51
MDC DSS/BLF Set Based Vol. 15, 5-4
MDC Enhanced WATS Vol. 15, 1-150
MDC MBS Interactive Display Vol. 15, 4-88
MDC Single Button Transfer Vol. 15, 3-75
MDC Single Line Queue Vol. 15, 5-25
MDC to 10-digit routing Vol. 15, 10-4
MDC to Universal routing Vol. 15, 11-5
MDC Variable CDAR Vol. 13, 1-129
MDR Data in the AMA Stream Vol. 15, 1-196

Meet Me Page Vol. 13, 1-162
Meet-Me Conference Vol. 12, 1-58
Meet-Me Conference Feature Expansion Vol. 13, 1-150
Message Service - Leave Message Vol. 14, 2-376
Message Service - List Management Vol. 14, 2-393
Message Waiting Lamp Update - Link Phone Vol. 13, 1-176
Multi-location Business Group I Vol. 13, 3-120
Multipilot Directory Numbers on MLH Group Vol. 15, 1-216
Multiple Position Hunt with Queue Vol. 13, 1-190
Music on Hold for EBS Vol. 14, 3-160
MVP Dial Plan Vol. 12, 1-68
Name Display for MADN Members Vol. 14, 3-179
NAS Features Optionality Vol. 13, 4-39
Network Access Registers (NARS) Vol. 15, 6-2
Network Attendant Control Vol. 13, 4-44
Network Attendant Recall Vol. 13, 4-49
Network Camp-On-II Vol. 13, 4-52
Network Dial Plan Display Vol. 13, 4-56
Network Display Enhancement Vol. 13, 4-74
Network Feature Access Restriction Vol. 15, 8-2
Network Intelligent Call Management Vol. 16, 7-26
Network Message Waiting Indicator (MWI) Vol. 13, 4-84
Network Name Display Vol. 13, 4-103
Network Name Display for Attendant Consoles Vol. 13, 4-115
Network Wide Ring Again Vol. 13, 4-140
Networked ACD on CCS7 Vol. 16, 4-44
Networked ACD on PRA Vol. 16, 4-59
Networked EBS Display Vol. 13, 4-170
Night Service - Flexible Vol. 12, 1-78
Night Service Trunk Answer from Any Station - Fixed Vol. 12, 1-86
Night Service Trunk Answer From Any Station - TAFAS Vol. 12, 1-94
Non-Data Link Console Call Extension Vol. 13, 1-210
Off-hook Queuing Vol. 13, 1-219
OHQ, CBQ for OUTWATS VFG Vol. 13, 1-228
Optional Answer Supervision from Attendant Queue Vol. 12, 1-101
Originating/Terminating Line Select (TLS) Vol. 14, 3-194
Outgoing Restriction Control Vol. 15, 1-225
Override ACR for CFU Vol. 12, 1-107
Patch Source Inclusion I Vol. 12, 1-115
Patch Source Inclusion II Vol. 12, 1-125
Peg Counts on LDNs on Attendant Consoles Vol. 12, 2-49
Pending Order File (POF) Enhancements Vol. 15, 1-246
Permanent Hold (500/2500 Sets) Vol. 12, 1-134
Personal Call Screening of Call Forwarding Vol. 13, 1-236
PF Robustness - Call Forwarding per Key (CFK) Vol. 15, 4-102
PF Robustness - Call Pickup Separate Keys Compatibility Vol. 15, 4-119
Position Busy Vol. 12, 1-148
Power Feature Audit Trails Vol. 15, 3-84
Power Features Enhancements I Vol. 15, 3-95
Power Features Installer Application Vol. 15, 3-131
Preset Conference Vol. 13, 1-245
Preset Conference (Large) Vol. 15, 1-256
Query Functional Station Grouping Vol. 12, 1-156
Queueing OMs per Route Vol. 13, 1-261
Remove Timeout between Authcode/Secondary Dial Tone Vol. 13, 1-276
Repeated Alert for MBS Vol. 14, 3-205
Ring Again Vol. 12, 1-158
Ring Again Cancellation Timer Vol. 12, 1-167
Ring Again on Hunt Groups Vol. 12, 1-176
Ring Reminder Off/On Option per Line Vol. 13, 1-304
RLT with No Third Party Interaction Vol. 14, 1-2

Second and Third Delay Announcements Vol. 12, 1-182
Secrecy Vol. 12, 1-193
Semi-restricted Incoming Lines Call Intercept Vol. 12, 1-196
Separate SMDR Output Files by Cust Group Vol. 13, 1-310
Series completion Vol. 15, 1-273
Series completion enhancements Vol. 15, 1-282
Service Analysis for IBN Vol. 15, 1-288
SERVORD cleanup for MBS Vol. 14, 2-403
Setting Attendant Recall Timers to Zero Vol. 12, 1-207
Short Hunt on MBS Vol. 14, 2-415
Simplified Dialing Vol. 12, 1-211
SMDR Derived from Bellcore AMA Record Vol. 15, 1-293
SMDR for ONI Lines Vol. 13, 1-319
Special Intercept Through Service Orders Vol. 12, 1-235
Specific Key Ringback on Ring Again Request on EBS Vol. 14, 3-212
Speed Calling Group - Long List Vol. 12, 1-240
Speed Calling Individual - Short List Vol. 12, 1-246
Station Activated DND with Feature Active Reminder Vol. 12, 1-256
Station Activation of CFB/CFD Vol. 13, 1-325
Station Camp On for Meridian Business Set Vol. 15, 2-34
Station Message Detail Recording Vol. 13, 1-337
Station Message Waiting Vol. 13, 1-345
Station Specific Auth Codes Vol. 13, 1-355
Station Specific Authcode - CDC Enhancements Vol. 13, 1-364
Storing of 24 Dialed Digits Vol. 12, 1-264
Stuttered Dial Tone for Message Waiting Vol. 13, 1-372
Supervisory Console (Basic) Vol. 13, 1-378
Suspend and Restore Remote Call Forward Lines Vol. 13, 1-381
Teen Service on MDC Vol. 13, 2-126
Terminating Billing Option Vol. 15, 1-297
TGB/TAC Access thru Special Keys Vol. 12, 1-267
Through Dialing Vol. 12, 1-273
Time of Day NCOS Vol. 15, 1-312
Time of Day Routing Vol. 15, 1-324
Trouble Key on IBN Console Vol. 12, 1-275
Trunk Busy Verify Tone Vol. 12, 1-282
TVDS - II Vol. 15, 1-333
Two-Way Splitting Vol. 12, 1-292
UCD Night Service Invocation Enhancements Vol. 12, 1-294
UCD on EBS and UCD SD Point Vol. 15, 1-340
UCD Queue Status Lamp Vol. 12, 1-301
Uniform Call Distribution (to 500/2500 Telephone Sets) Vol. 12, 1-310
Uniform Call Distribution from Queue Vol. 12, 1-324
Variable Length/Same Leading Digit(s) Translation Vol. 12, 1-329
Variable Speed Call Access Code Vol. 12, 1-336
Variable Stutter Dial Tone Vol. 13, 1-385
Variable Types of Outpulsing on Same Call Vol. 12, 1-350
VFG INWATS Ovfl Totals to AMA Tape - IBN Vol. 13, 1-388
VFG Look Ahead Vol. 13, 1-397
VFG Usage Data Vol. 13, 1-404
Virtual Access to Private Networks Vol. 14, 1-41
VMX Interface Vol. 15, 1-360
Wild Card Key Vol. 12, 1-354
OPTOPT, table
datafilling Vol. 15, 5-33
ordering code
ACD00001 Vol. 16, 2-29
ordering codes
2-Way Digital FX Trunk - Business Services Vol. 11, 2-2
Access to CO from PBX Vol. 11, 2-50
ACD00001 Vol. 16, 2-2, Vol. 16, 2-62, Vol. 16, 2-79, Vol. 16, 2-86, Vol. 16, 2-106, Vol. 16, 2-114, Vol. 16, 2-221, Vol. 16, 2-238, Vol. 16, 2-261, Vol. 16, 2-276
ACD00002 Vol. 16, 3-2, Vol. 16, 3-121, Vol. 16, 3-144

ACD00004 Vol. 16, 4-2, Vol. 16, 4-8, Vol. 16, 4-29, Vol. 16, 4-42, Vol. 16, 4-57
ACD00005 Vol. 16, 2-62, Vol. 16, 2-106
ACD00006 Vol. 16, 2-2, Vol. 16, 2-261, Vol. 16, 2-276
ACD00007
ACD00008 Vol. 16, 3-2
ACD00009 Vol. 16, 4-42
ACD00010 Vol. 16, 4-57
ACD0008 Vol. 16, 3-144
ADC00001 Vol. 16, 2-34
Attendant Console OM on an Individual Console Basis Vol. 12, 2-2
Attendant to Recorded Announcement Vol. 11, 2-152
Call Forcing Tone Optionality Vol. 16, 2-209
Call Pickup Vol. 11, 2-364
Call Request Call Processing Enhancements Vol. 11, 2-375
Call Request Retrieve/Key Short Hunt Interaction Control Vol. 12, 3-203
CCSA Line Option Vol. 14, 4-34
Change Line Class Codes via SERVORD Vol. 12, 3-239
CLASS on MDC Base Vol. 13, 2-28
Code Restriction Vol. 11, 2-477
Conference Join Vol. 11, 2-484
Distinctive and Ring Again Ringing Vol. 11, 2-571
EBS as a Message Center Vol. 14, 2-41
ECM/SCAI Support for Non-ACD-Ph I Vol. 16, 3-144
Enhanced EBS Reason Display Vol. 14, 2-63
Fast Transfer for Meridian Business Set Vol. 15, 3-29
ICM00001 Vol. 16, 5-12
ICM00010 Vol. 16, 7-2
ICM00013 Vol. 16, 7-26
ICM00050 Vol. 16, 9-30, Vol. 16, 9-65, Vol. 16, 9-80, Vol. 16, 9-96, Vol. 16, 9-106
ICM0050 Vol. 16, 9-46
MBG Enabling of Feature Networking Vol. 13, 3-51
MBS Auto Answer Back Vol. 14, 2-130
MBS Three-Way Calling Transfer Vol. 14, 2-355
MDC AFG Add Option Vol. 15, 4-71
MDC CUSTENG Robustness Vol. 12, 1-51
MDC DSS/BLF Set Based Vol. 15, 5-2
MDC MBS Interactive Display Vol. 15, 4-88
MDC Minimum Vol. 12, 1-40
MDC Single Button Transfer Vol. 15, 3-75
MDC to 10-digit routing Vol. 15, 10-4
MDC to Universal routing Vol. 15, 11-5
MDC00001 Vol. 11, 2-2, Vol. 11, 2-7, Vol. 11, 2-16, Vol. 11, 2-22, Vol. 11, 2-30, Vol. 11, 2-34, Vol. 11, 2-39, Vol. 11, 2-43, Vol. 11, 2-57, Vol. 11, 2-64, Vol. 11, 2-66, Vol. 11, 2-72, Vol. 11, 2-77, Vol. 11, 2-80, Vol. 11, 2-89, Vol. 11, 2-100, Vol. 11, 2-105, Vol. 11, 2-114, Vol. 11, 2-122, Vol. 11, 2-127, Vol. 11, 2-136, Vol. 11, 2-140, Vol. 11, 2-144, Vol. 11, 2-152, Vol. 11, 2-154, Vol. 11, 2-166, Vol. 11, 2-169, Vol. 11, 2-179, Vol. 11, 2-192, Vol. 11, 2-196, Vol. 11, 2-219, Vol. 11, 2-244, Vol. 11, 2-258, Vol. 11, 2-269, Vol. 11, 2-283, Vol. 11, 2-293, Vol. 11, 2-304, Vol. 11, 2-334, Vol. 11, 2-348, Vol. 11, 2-364, Vol. 11, 2-373, Vol. 11, 2-375, Vol. 11, 2-378, Vol. 11, 2-391, Vol. 11, 2-411, Vol. 11, 2-422, Vol. 11, 2-432, Vol. 11, 2-440, Vol. 11, 2-445, Vol. 11, 2-455, Vol. 11, 2-461, Vol. 11, 2-467, Vol. 11, 2-493, Vol. 11, 2-500, Vol. 11, 2-505, Vol. 11, 2-517, Vol. 11, 2-529, Vol. 11, 2-536, Vol. 11, 2-541, Vol. 11, 2-553, Vol. 11, 2-563, Vol. 11, 2-571, Vol. 11, 2-576, Vol. 11, 2-582, Vol. 11, 2-588, Vol. 11, 2-606, Vol. 11, 2-618, Vol. 11, 2-628, Vol. 11, 2-638, Vol. 11, 2-648, Vol. 11, 2-651, Vol. 11, 2-658, Vol. 11, 2-668, Vol. 11, 2-680, Vol. 11, 2-700, Vol. 11, 2-705, Vol. 11, 2-707, Vol. 11, 2-714, Vol. 11, 2-717, Vol. 11, 2-721, Vol. 11, 2-726, Vol. 12, 1-2, Vol. 12, 1-19, Vol. 12, 1-25, Vol. 12, 1-32, Vol. 12, 1-37, Vol. 12, 1-56, Vol. 12, 1-68, Vol. 12, 1-78, Vol. 12, 1-93, Vol. 12, 1-101, Vol. 12, 1-107, Vol. 12, 1-115, Vol. 12, 1-125, Vol. 12, 1-134, Vol. 12, 1-148, Vol. 12, 1-152, Vol. 12, 1-158, Vol. 12, 1-167, Vol. 12, 1-175, Vol. 12, 1-182, Vol. 12, 1-193, Vol. 12, 1-196, Vol. 12, 1-207, Vol. 12, 1-211, Vol. 12, 1-224, Vol. 12, 1-235, Vol. 12, 1-240, Vol. 12, 1-245, Vol. 12, 1-255, Vol. 12, 1-264, Vol. 12, 1-267, Vol. 12, 1-273, Vol. 12, 1-275, Vol. 12, 1-282, Vol. 12, 1-292, Vol. 12, 1-294, Vol. 12, 1-301, Vol. 12, 1-310,

Vol. 12, 1-324, Vol. 12, 1-329, Vol. 12, 1-335, Vol. 12, 1-350, Vol. 12, 1-354, Vol. 12, 3-441, Vol. 13, 1-378
MDC00002 Vol. 12, 2-21, Vol. 12, 2-29, Vol. 12, 2-34, Vol. 12, 2-45, Vol. 12, 2-49
MDC00003 Vol. 11, 2-216, Vol. 11, 2-231, Vol. 11, 2-321, Vol. 11, 2-404, Vol. 11, 2-673, Vol. 12, 1-16, Vol. 12, 3-2, Vol. 12, 3-11, Vol. 12, 3-15, Vol. 12, 3-24, Vol. 12, 3-37, Vol. 12, 3-48, Vol. 12, 3-57, Vol. 12, 3-70, Vol. 12, 3-81, Vol. 12, 3-85, Vol. 12, 3-92, Vol. 12, 3-100, Vol. 12, 3-116, Vol. 12, 3-136, Vol. 12, 3-149, Vol. 12, 3-178, Vol. 12, 3-191, Vol. 12, 3-200, Vol. 12, 3-203, Vol. 12, 3-215, Vol. 12, 3-230, Vol. 12, 3-239, Vol. 12, 3-265, Vol. 12, 3-272, Vol. 12, 3-282, Vol. 12, 3-296, Vol. 12, 3-303, Vol. 12, 3-309, Vol. 12, 3-316, Vol. 12, 3-327, Vol. 12, 3-332, Vol. 12, 3-338, Vol. 12, 3-344, Vol. 12, 3-348, Vol. 12, 3-355, Vol. 12, 3-369, Vol. 12, 3-374, Vol. 12, 3-385, Vol. 12, 3-396, Vol. 12, 3-403, Vol. 12, 3-409, Vol. 12, 3-420, Vol. 12, 3-431, Vol. 12, 3-441, Vol. 13, 1-2, Vol. 13, 1-42, Vol. 13, 1-50, Vol. 13, 1-56, Vol. 13, 1-63, Vol. 13, 1-72, Vol. 13, 1-77, Vol. 13, 1-80, Vol. 13, 1-108, Vol. 13, 1-112, Vol. 13, 1-123, Vol. 13, 1-129, Vol. 13, 1-149, Vol. 13, 1-162, Vol. 13, 1-176, Vol. 13, 1-182, Vol. 13, 1-210, Vol. 13, 1-219, Vol. 13, 1-228, Vol. 13, 1-236, Vol. 13, 1-245, Vol. 13, 1-261, Vol. 13, 1-276, Vol. 13, 1-304, Vol. 13, 1-309, Vol. 13, 1-319, Vol. 13, 1-325, Vol. 13, 1-337, Vol. 13, 1-345, Vol. 13, 1-355, Vol. 13, 1-364, Vol. 13, 1-372, Vol. 13, 1-381, Vol. 13, 1-385, Vol. 13, 1-388, Vol. 13, 1-397, Vol. 13, 1-404
MDC00004 Vol. 13, 2-2, Vol. 13, 2-9, Vol. 13, 2-28, Vol. 13, 2-66, Vol. 13, 2-76, Vol. 13, 2-88, Vol. 13, 2-106, Vol. 13, 2-125
MDC00005 Vol. 13, 3-2, Vol. 13, 3-25, Vol. 13, 3-45, Vol. 13, 3-51, Vol. 13, 3-56, Vol. 13, 3-63, Vol. 13, 3-75, Vol. 13, 3-110, Vol. 13, 3-120
MDC00006 Vol. 13, 4-2, Vol. 13, 4-33, Vol. 13, 4-39, Vol. 13, 4-44, Vol. 13, 4-48, Vol. 13, 4-52, Vol. 13, 4-56, Vol. 13, 4-73, Vol. 13, 4-83, Vol. 13, 4-103, Vol. 13, 4-115, Vol. 13, 4-140, Vol. 13, 4-169, Vol. 14, 1-2, Vol. 14, 1-39, Vol. 15, 8-2
MDC00007 Vol. 11, 2-375, Vol. 14, 2-2, Vol. 14, 2-8, Vol. 14, 2-17, Vol. 14, 2-25, Vol. 14, 2-38, Vol. 14, 2-41, Vol. 14, 2-47, Vol. 14, 2-63, Vol. 14, 2-91, Vol. 14, 2-111, Vol. 14, 2-119, Vol. 14, 2-130, Vol. 14, 2-136, Vol. 14, 2-143, Vol. 14, 2-148, Vol. 14, 2-160, Vol. 14, 2-177, Vol. 14, 2-189, Vol. 14, 2-209, Vol. 14, 2-218, Vol. 14, 2-226, Vol. 14, 2-233, Vol. 14, 2-241, Vol. 14, 2-243, Vol. 14, 2-248, Vol. 14, 2-257, Vol. 14, 2-265, Vol. 14, 2-267, Vol. 14, 2-280, Vol. 14, 2-287, Vol. 14, 2-289, Vol. 14, 2-297, Vol. 14, 2-307, Vol. 14, 2-314, Vol. 14, 2-316, Vol. 14, 2-328, Vol. 14, 2-333, Vol. 14, 2-341, Vol. 14, 2-355, Vol. 14, 2-361, Vol. 14, 2-376, Vol. 14, 2-392, Vol. 14, 2-403, Vol. 14, 2-415, Vol. 14, 3-54
MDC00008 Vol. 14, 3-2, Vol. 14, 3-17, Vol. 14, 3-26, Vol. 14, 3-90, Vol. 14, 3-101, Vol. 14, 3-110, Vol. 14, 3-117, Vol. 14, 3-121, Vol. 14, 3-136, Vol. 14, 3-148, Vol. 14, 3-160, Vol. 14, 3-179, Vol. 14, 3-194, Vol. 14, 3-205, Vol. 14, 3-212
MDC00009 Vol. 14, 4-12, Vol. 14, 4-17, Vol. 14, 4-30, Vol. 14, 4-34, Vol. 14, 4-38, Vol. 14, 4-56, Vol. 14, 4-68, Vol. 14, 4-87, Vol. 14, 4-93, Vol. 14, 4-107, Vol. 15, 1-2, Vol. 15, 1-7, Vol. 15, 1-24, Vol. 15, 1-29, Vol. 15, 1-54, Vol. 15, 1-88, Vol. 15, 1-145, Vol. 15, 1-150, Vol. 15, 1-194, Vol. 15, 1-216, Vol. 15, 1-225, Vol. 15, 1-246, Vol. 15, 1-256, Vol. 15, 1-287, Vol. 15, 1-293, Vol. 15, 1-297, Vol. 15, 1-312, Vol. 15, 1-333, Vol. 15, 1-340, Vol. 15, 1-360, Vol. 15, 4-2, Vol. 15, 7-2
MDC00012 Vol. 15, 2-2, Vol. 15, 2-33
MDC00013 Vol. 15, 3-2, Vol. 15, 3-21, Vol. 15, 3-29, Vol. 15, 3-44, Vol. 15, 3-62, Vol. 15, 3-75, Vol. 15, 3-84, Vol. 15, 3-95, Vol. 15, 3-131
MDC00014 Vol. 15, 4-58, Vol. 15, 4-143
MDC00016 Vol. 15, 6-2
MDC00018 Vol. 14, 4-12, Vol. 14, 4-30, Vol. 15, 1-194
MDC00020 Vol. 13, 1-236
MDC00033 Vol. 15, 7-20
MDC00038 Vol. 13, 1-129

MDC00042 Vol. 12, 3-178
MDC00061 Vol. 12, 3-149
MDC00063 Vol. 13, 2-76
MDC00068 Vol. 15, 9-2
N1000022 Vol. 13, 4-56
Network Dial Plan Display Vol. 13, 4-56
Network Display Enhancement Vol. 13, 4-73
Network Name Display Vol. 13, 4-103
PF Robustness - Call Forwarding per Key (CFK) Vol. 15, 4-101
PF Robustness - Call Pickup Separate Keys Compatibility Vol. 15, 4-118
Power Features Installer Application Vol. 15, 3-131
RES00005 Vol. 13, 4-56
Semi-restricted Incoming Lines Call Intercept Vol. 12, 1-196
SLE on MDC Vol. 13, 2-106
UCD on EBS and UCD SD Point Vol. 15, 1-340
Variable Stutter Dial Tone Vol. 13, 1-385
overflow formulas
NACD Vol. 16, 11-18, Vol. 16, 12-24, Vol. 16, 13-26
OWATZONE, table
datafilling Vol. 13, 1-70, Vol. 13, 1-234
OWNER, table
datafilling Vol. 14, 4-44, Vol. 14, 4-77, Vol. 15, 1-250

P

PACMAN (incoming), table
datafilling Vol. 15, 1-51
PADDATA, table
routing Vol. 16, 11-7, Vol. 16, 12-8, Vol. 16, 13-9
PFCTRL, table
datafilling Vol. 15, 3-92, Vol. 15, 3-125, Vol. 15, 3-144, Vol. 15, 4-94, Vol. 15, 4-110, Vol. 15, 4-136
PRECONF, table
datafilling Vol. 13, 1-252, Vol. 15, 1-266, Vol. 15, 6-32
preparing to datafill
MDC to 10-digit routing Vol. 15, 10-2
MDC to Universal routing Vol. 15, 11-1
prerequisites
2-Way Digital FX Trunk - Business Services Vol. 11, 2-2
3-Way Conference/Transfer Vol. 11, 2-7
3WC Dial 0 for 608 Cord Board Vol. 11, 2-16
3WC/Call Transfer for UCD Vol. 11, 2-22
3WC/CXR to 2500 Set Call Waiting Interactions Vol. 11, 2-30
A/C Activate/Deactivate of CFU/CFI Vol. 12, 3-2
AC to IBNISUP Interworking Vol. 12, 3-11
Access to CO from PBX Vol. 11, 2-50
ACD - Mgmt Rep 2 Way Data Stream Vol. 16, 2-62
ACD Access Feature Grouping Vol. 16, 2-2
ACD CompuCALL Vol. 16, 3-2
ACD Night Service Call Queue Clearing Vol. 16, 2-79
ACD Nodal Treatment in NACD Vol. 16, 4-2
ACD on 2500 Set Vol. 16, 2-86
ACD Remote Load Management I Vol. 16, 2-106
ACD-Load Management III Vol. 16, 2-34
AC-Extended Calls to CFB/CFD Vol. 11, 2-39
Attendant Call Detail Entry Vol. 12, 3-37
Attendant Call Park Recall Timer Vol. 11, 2-72
Attendant Call Selection Vol. 11, 2-77
Attendant Camp-On Vol. 11, 2-80
Attendant Conference (Maximum Six Conferees) Vol. 11, 2-89
Attendant Console Call Hold Recall Vol. 11, 2-100
Attendant Console Display Vol. 11, 2-105
Attendant Console End-to-End Signalling Vol. 11, 2-114
Attendant Console OM on an Individual Console Basis Vol. 12, 2-2
Attendant Control of Trunk Group Access Vol. 11, 2-122
Attendant Control of VFG Vol. 12, 3-48
Attendant Display of Queued Calls by ICI Key Vol. 11, 2-127
Attendant Locked Loop Operation Vol. 11, 2-136

Attendant Message Waiting Vol. 12, 3-57
Attendant Release Upon Completion of Dialing Vol. 11, 2-140
Attendant Set Up Conference
10 or More Conferees Vol. 12, 3-70
Attendant Speed Calling Vol. 11, 2-144
Attendant to Recorded Announcement
Vol. 11, 2-152
Attendant to UCD Vol. 11, 2-154
Attendant Transfer Vol. 11, 2-166
Attendent - Auto Dial Vol. 11, 2-66
Audio Interlude (BC0946) Vol. 11, 2-179
Audio Table Expansion (AD0822)
Vol. 11, 2-192
Authcode for MDR Vol. 11, 2-34,
Vol. 11, 2-43, Vol. 11, 2-57, Vol. 11, 2-64,
Vol. 11, 2-169, Vol. 11, 2-455, Vol. 11, 2-461,
Vol. 11, 2-500, Vol. 11, 2-529, Vol. 11, 2-536,
Vol. 12, 1-167, Vol. 12, 1-182, Vol. 12, 1-211,
Vol. 12, 1-235, Vol. 12, 1-301, Vol. 12, 1-329,
Vol. 12, 1-335, Vol. 12, 1-350, Vol. 12, 3-15,
Vol. 12, 3-81, Vol. 12, 3-85, Vol. 12, 3-296,
Vol. 12, 3-303, Vol. 12, 3-309, Vol. 12, 3-327,
Vol. 12, 3-409, Vol. 13, 1-276, Vol. 13, 1-309,
Vol. 13, 1-319, Vol. 13, 1-337, Vol. 13, 1-345,
Vol. 13, 1-372, Vol. 13, 1-381, Vol. 13, 1-388,
Vol. 13, 1-397, Vol. 13, 1-404, Vol. 13, 2-125,
Vol. 14, 2-403, Vol. 14, 4-12, Vol. 14, 4-30,
Vol. 14, 4-38, Vol. 14, 4-56, Vol. 14, 4-68,
Vol. 14, 4-93, Vol. 14, 4-107, Vol. 15, 1-2,
Vol. 15, 1-7, Vol. 15, 1-29, Vol. 15, 1-287,
Vol. 15, 1-293, Vol. 15, 1-297, Vol. 15, 1-312,
Vol. 15, 1-333, Vol. 15, 1-360
Automatic Intercept System (AIS) Enhancement Vol. 11, 2-196
Automatic Line Vol. 11, 2-216
Automatic Line and MADN Vol. 14, 2-2
Automatic Recall Vol. 11, 2-219
Base ACD Vol. 16, 2-114
Bellcore AMA Enhanced Automatic Route Selection Translations Vol. 14, 4-17
Blind Transfer Recall Vol. 11, 2-231
Blind Transfer Recall Identification
Vol. 11, 2-244
Block Calling Name/Number Delivery Blocking per Call Vol. 15, 7-2
Business Set Busy Indicator Vol. 14, 2-8
Business Set Call Waiting Originate
Vol. 14, 2-17
Business Set Dial Call Waiting Vol. 14, 2-25
Busy Verification - Stations Vol. 11, 2-258
Busy Verification - Trunks Vol. 11, 2-269
Call Back Queuing (Basic) Vol. 12, 3-92
Call Forcing Tone Optionality Vol. 16, 2-209
Call Forward All Calls Vol. 11, 2-283
Call Forward Busy Vol. 11, 2-293
Call Forward Busy - Inhibit Make & Inhibit Line Busy Vol. 12, 3-100
Call Forward Busy/Don't Answer - Internal/External Vol. 12, 3-116
Call Forward Do Not Answer and Call Waiting Interaction Vol. 11, 2-321, Vol. 12, 3-136
Call Forward No Answer Vol. 11, 2-304
Call Forward Prevention Enhancements
Vol. 12, 3-149
Call Forward Timed Vol. 12, 3-178
Call Forward/Automatic Dial Display
Vol. 14, 2-38
Call Forwarding of Call Waiting Calls
Vol. 12, 3-191
Call Hold Vol. 11, 2-334
Call Park Vol. 11, 2-348
Call Park Recall Identification Vol. 14, 3-2
Call Pickup Vol. 11, 2-364
Call Pickup Transparency Vol. 11, 2-373
Call Request Call Processing Enhancements
Vol. 11, 2-375, Vol. 12, 3-200
Call Request Retrieve/Key Short Hunt Interaction Control Vol. 12, 3-203
Call Transfer Enhancement Vol. 11, 2-378
Call Waiting Vol. 11, 2-391
Call Waiting - Originating Vol. 11, 2-411
Call waiting 1A transparency issues
Vol. 12, 3-208
Call Waiting for 3-Way Calling
Vol. 11, 2-404
Calling Name Delivery on MADN (CNAMD on MADN) Vol. 13, 2-2
Calling Name Inspect Key Vol. 15, 2-2
Calling Name/Number Delivery Blocking (CNNB) Vol. 15, 7-20
Calling Number and NCOS Display on Attendant Console Vol. 13, 4-2
Camp On with Music Vol. 11, 2-422

CCSA Line Option Vol. 14, 4-34
CFBL Inhibit Line Busy/Inhibit MB Enhancements Vol. 12, 3-215
CFD from Hunt Group Station Vol. 11, 2-432
CFD Interaction with Three-Way Calling Vol. 11, 2-440
CFGDA for Hunt Groups Vol. 11, 2-445
CFW for MADN Secondary Members Vol. 14, 3-17
Change EBS Features During Talking State Vol. 12, 3-230
Change Line Class Codes via SERVORD Vol. 12, 3-239
CLASS on MBS/MADN Base Vol. 13, 2-9
CLASS on MDC Base Vol. 13, 2-28
Class on MVP Base Vol. 13, 2-66
CLEN for EBS Vol. 12, 3-272
Code Calling - Line Termination Vol. 11, 2-467
Code Restriction Vol. 11, 2-477
CompuCALLEnhancements-Screen-Assisted Telephony Vol. 16, 3-121
CompuCALL Integration with ICCM Vol. 16, 7-2
CompuCALL Transport Enhancements Vol. 16, 5-12
Conference Join Vol. 11, 2-484
Control of Multiple Call Forwarding Vol. 12, 3-282
COT Enhancement Vol. 13, 2-76
CPU Datafill Enhancements Vol. 11, 2-493
Customer Screening at the Trunk Test Position Vol. 14, 4-87
Denied Incoming Vol. 11, 2-505
Dial - Call Waiting Vol. 11, 2-517
Dialtone Passback via PX Trunks for MDC Vol. 12, 3-316
Direct Station Selection/Busy Lamp Field for MBS Vol. 15, 3-2
Directed Call Park Vol. 11, 2-541
Directed Call Pickup - Barge In Vol. 11, 2-553
Directed Call Pickup - Non Barge In Vol. 11, 2-563
DISA
Invalid Authcode Treatment Option Vol. 12, 3-338
DISA - Remove Auth Code Timeout Vol. 12, 3-344
DISA Definable Timeout Destination Vol. 11, 2-673, Vol. 12, 3-24, Vol. 12, 3-385, Vol. 12, 3-420, Vol. 13, 1-56
DISA Enhancements Vol. 12, 3-332
DISA Third Dial Tone Vol. 12, 3-348
Display Called About Number Vol. 16, 2-221
Distinctive and Ring Again Ringing Vol. 11, 2-571
Distinctive Call Waiting Ringback Vol. 12, 3-355
Distinctive Call Waiting Tones Vol. 11, 2-576
Distinctive Ringing Vol. 11, 2-582
Distinctive Ringing Enhancements Vol. 11, 2-588
Do Not Disturb Vol. 12, 2-21
DT after CFW Cancel and Spd Call Programming Vol. 12, 3-369
DTMF Outpulsing on a Line Vol. 11, 2-606
Dynamic Measurements Vol. 12, 2-29
E911 Single Button Transfer Operation Vol. 15, 3-21
EAEO - IBN PIC Using SERVORD Vol. 12, 3-374
EBS as a Message Center Vol. 14, 2-41
EBS as a Message Center - Enhancements Vol. 14, 2-47
EBS Call Forwarding on a per Key Basis Vol. 14, 3-26
ECM/SCAI Support for Non-ACD - Ph 1 Vol. 16, 3-144
End to End Signalling via Speed Call Vol. 11, 2-618
Enhanced EBS Reason Display Vol. 14, 2-63
Enhanced Handling of ACD Re-Enqueued Calls Vol. 16, 2-238
Enhanced MADN Call Control Vol. 14, 3-54
ERWT for Lines, Trunks for ARS, Call Back Queue Features Vol. 12, 3-396
ESN - Answer Supervision Generation Vol. 12, 3-403
ESN - Network Class of Service Vol. 15, 1-24
ESN - Network Speed Call Vol. 15, 1-54
ESN - Off-hook Queuing Vol. 12, 3-431

Executive Message Service Enhancement - Multi EMW per DN Vol. 14, 2-91
Executive Right of Way Vol. 11, 2-628
Fast Transfer for Meridian Business Set Vol. 15, 3-29
Flexible Console Alerting Vol. 11, 2-638
Flexible Display Language Vol. 12, 2-34
Flexible Intercept Vol. 11, 2-648
Flexible Station Controlled Conference (500/2500 Sets) Vol. 12, 3-441
Forced Announcements for NACD Vol. 16, 4-29
Generalized Distinctive Ringing Vol. 11, 2-651
Group Intercom All Call Vol. 14, 3-90
Group Number Feature Control Vol. 13, 1-2
IBN - Optional Call Forward Links Vol. 13, 1-77
IBN & ESB Compatibility Vol. 13, 1-72
IBN Auth Codes for Alternate Route Selection (ARS) Vol. 13, 1-42
IBN Call Forward Enhancements Vol. 13, 1-50
IBN Call Forward Validation Vol. 11, 2-658
IBN Cancel Call Waiting Vol. 11, 2-668
IBN Class 5 Psuedo OUTWATS Vol. 13, 1-63
IBN ISUP NETINFO Translations Vol. 13, 3-2
IBN LCC Compatibility with FRO Line Option Vol. 11, 2-680
IBN Outpulsing to POTS Trunks Vol. 11, 2-700
IBN Quantity Control (100 Lines) Vol. 11, 2-705
IBN Trunks with ISUP Signalling Vol. 13, 1-80
IBNRTE Table Capacity Increase Vol. 11, 2-707
ICM Configuration Management Vol. 16, 9-30
ICM Variable Wrap Reporting Vol. 16, 9-96
IDDD via ARS Vol. 15, 1-88
Immediate Answer Reporting for IBN Vol. 11, 2-714
Immediate Notification of Priority Enqueued Calls Vol. 12, 2-45
Increase Auth Codes per Customer Group Vol. 13, 1-108
Increase in Number of IBN Customer Groups Vol. 11, 2-717
Increase Number of Equivalent DN Appearances for IBN Vol. 11, 2-721
Individual Page from GIC Vol. 14, 3-101
Interactive Display Menu on MBS Sets Vol. 15, 3-44
Interposition Calls and Transfers Vol. 11, 2-726
INWATS to Direct Inward System Access Vol. 13, 1-112
ISUP Shared Trunking Enhancement Vol. 13, 3-25
Killer Trunk Report Separation Vol. 15, 1-133
Last Number Redial (LNR) Vol. 12, 1-2
Last Number Redial from Set Vol. 14, 3-110
Lockout Vol. 12, 1-16
Loud Speaker & Radio Paging Access Vol. 12, 1-19
Loudspeaker Paging - Line Termination Vol. 12, 1-25
MACD Nodal Service Observing Vol. 16, 2-261
MACD PIN Configuration and Control Vol. 16, 2-276
MADN and Conference Interaction Vol. 12, 1-32
MADN Bridging - 3 Way Call Vol. 14, 3-117
MADN Cut-off on Disconnect (COD) Vol. 14, 3-121
MADN Ring Forward Vol. 14, 3-136
MADN Service Orders Vol. 14, 2-111
Make Set Busy Except GIC Vol. 14, 3-148
MAP Alarm Level Screening Vol. 15, 1-145
MAP Display for Attendant OM Vol. 12, 1-37
MBG Alternate Terminating Number Billing Vol. 13, 3-45
MBG Enabling of Feature Networking Vol. 13, 3-51
MBG Feature Networking Control Vol. 13, 3-56
MBG II - Support of IBN7 Trunk Features Vol. 13, 3-63

MBG III - Support of Private Numbering Plan Vol. 13, 3-75
MBG IV - Support of Network EMW Vol. 13, 3-110
MBG Redirection Enhancements for ISUP IBN Trunks Vol. 13, 4-33
MBS 30-Port Conference Vol. 12, 1-40
MBS Auto Answer Back Vol. 14, 2-130
MBS Automatic Dial Vol. 14, 2-136
MBS Automatic Line Vol. 14, 2-143
MBS Busy Override Vol. 14, 2-148
MBS Call Back Queuing Vol. 14, 2-160
MBS Call Waiting Vol. 14, 2-218
MBS Display Called Number Vol. 14, 2-226
MBS Display Calling Number Vol. 14, 2-233
MBS Feature Code Access Vol. 14, 2-243
MBS Feature Display Vol. 14, 2-248
MBS II Templates Vol. 14, 2-119
MBS Individual Business Line Vol. 14, 2-267
MBS Listen on Hold Vol. 14, 2-177, Vol. 14, 2-189, Vol. 14, 2-209, Vol. 14, 2-241, Vol. 14, 2-257, Vol. 14, 2-265, Vol. 14, 2-280, Vol. 14, 2-287
MBS MADN SCA/MCA (across Switch) Vol. 14, 2-289
MBS Make Set Busy Vol. 14, 2-297
MBS Malicious Call Hold Vol. 14, 2-307
MBS Message Waiting Vol. 13, 1-123
MBS Onhook Dialing Vol. 14, 2-314
MBS Power Feature - Name Programming Vol. 15, 3-62
MBS Privacy Release (across Switch) Vol. 14, 2-316
MBS Query Time Key Vol. 14, 2-328
MBS Ring-Again Feature Key S/W Vol. 14, 2-333
MBS Speed Calling Feature Key S/W Vol. 14, 2-341
MBS Three-Way Calling Transfer Vol. 14, 2-355
MDC AFG Add Option Vol. 15, 4-71
MDC Circuit Test Enhancement Vol. 14, 2-361
MDC Copy Feature Set Vol. 15, 4-58
MDC CUSTENG Robustness Vol. 12, 1-51
MDC DSS/BLF Set Based Vol. 15, 5-2
MDC Enhanced WATS Vol. 15, 1-150
MDC MBS Interactive Display Vol. 15, 4-88
MDC Single Button Transfer Vol. 15, 3-75
MDC Single Line Queue Vol. 15, 5-25
MDC to 10-digit routing Vol. 15, 10-4
MDC to Universal routing Vol. 15, 11-5
MDC Variable CDAR Vol. 13, 1-129
MDR Data in the AMA Stream Vol. 15, 1-194
Meet Me Page Vol. 13, 1-162
Meet-Me Conference Vol. 12, 1-56
Meet-Me Conference Feature Expansion Vol. 13, 1-149
Message Service - Leave Message Vol. 14, 2-376
Message Service - List Management Vol. 14, 2-392
Message Waiting Lamp Update - Link Phone Vol. 13, 1-176
Multi-location Business Group I Vol. 13, 3-120
Multipilot Directory Numbers on MLH Group Vol. 15, 1-216
Multiple Position Hunt with Queue Vol. 13, 1-182
Music on Hold for EBS Vol. 14, 3-160
MVP Dial Plan Vol. 12, 1-68
Name Display for MADN Members Vol. 14, 3-179
NAS Features Optionality Vol. 13, 4-39
Network Access Registers (NARS) Vol. 15, 6-2
Network Attendant Control Vol. 13, 4-44
Network Attendant Recall Vol. 13, 4-48
Network Camp-On-II Vol. 13, 4-52
Network Dial Plan Display Vol. 13, 4-56
Network Display Enhancement Vol. 13, 4-73
Network Feature Access Restriction Vol. 15, 8-2
Network Intelligent Call Management Vol. 16, 7-26
Network Message Waiting Indicator (MWI) Vol. 13, 4-83
Network Name Display Vol. 13, 4-103
Network Name Display for Attendant Consoles Vol. 13, 4-115
Network Wide Ring Again Vol. 13, 4-140

Networked ACD on CCS7 Vol. 16, 4-42
Networked ACD on PRA Vol. 16, 4-57
Networked EBS Display Vol. 13, 4-169
Night Service - Flexible Vol. 12, 1-78
Night Service Trunk Answer from Any Station - Fixed Vol. 12, 1-86
Night Service Trunk Answer From Any Station - TAFAS Vol. 12, 1-93
Non-Data Link Console Call Extension Vol. 13, 1-210
Off-hook Queuing Vol. 13, 1-219
OHQ, CBQ for OUTWATS VFG Vol. 13, 1-228
Optional Answer Supervision from Attendant Queue Vol. 12, 1-101
Originating/Terminating Line Select (TLS) Vol. 14, 3-194
Outgoing Restriction Control Vol. 15, 1-225
Override ACR for CFU Vol. 12, 1-107
Patch Source Inclusion I Vol. 12, 1-115
Patch Source Inclusion II Vol. 12, 1-125
Peg Counts on LDNs on Attendant Consoles Vol. 12, 2-49
Pending Order File (POF) Enhancements Vol. 15, 1-246
Permanent Hold (500/2500 Sets) Vol. 12, 1-134
Personal Call Screening of Call Forwarding Vol. 13, 1-236
PF Robustness - Call Forwarding per Key (CFK) Vol. 15, 4-101
PF Robustness - Call Pickup Separate Keys Compatibility Vol. 15, 4-118
Position Busy Vol. 12, 1-148
Power Feature Audit Trails Vol. 15, 3-84
Power Features Enhancements I Vol. 15, 3-95
Power Features Installer Application Vol. 15, 3-131
Preset Conference Vol. 13, 1-245
Preset Conference (Large) Vol. 15, 1-256
Query Functional Station Grouping Vol. 12, 1-152
Queueing OMs per Route Vol. 13, 1-261
Repeated Alert for MBS Vol. 14, 3-205
Ring Again Vol. 12, 1-158
Ring Again on Hunt Groups Vol. 12, 1-175
Ring Reminder Off/On Option per Line Vol. 13, 1-304
RLT with No Third Party Interaction Vol. 14, 1-2
Secrecy Vol. 12, 1-193
Semi-restricted Incoming Lines Call Intercept Vol. 12, 1-196
Series completion Vol. 15, 1-273
Series completion enhancements Vol. 15, 1-282
Setting Attendant Recall Timers to Zero Vol. 12, 1-207
Short Hunt on MBS Vol. 14, 2-415
SLE on MBS/MADN Vol. 13, 2-88
SLE on MDC Vol. 13, 2-106
Specific Key Ringback on Ring Again Request on EBS Vol. 14, 3-212
Speed Calling Group - Long List Vol. 12, 1-240
Speed Calling Individual - Short List Vol. 12, 1-245
Station Activated DND with Feature Active Reminder Vol. 12, 1-255
Station Activation of CFB/CFD Vol. 13, 1-325
Station Camp On for Meridian Business Set Vol. 15, 2-33
Station Specific Auth Codes Vol. 13, 1-355
Station Specific Authcode - CDC Enhancements Vol. 13, 1-364
Storing of 24 Dialed Digits Vol. 12, 1-264
Supervisory Console (Basic) Vol. 13, 1-378
TGB/TAC Access thru Special Keys Vol. 12, 1-267
Through Dialing Vol. 12, 1-273
Time of Day Routing Vol. 15, 1-324
Trouble Key on IBN Console Vol. 12, 1-275
Trunk Busy Verify Tone Vol. 12, 1-282
Two-Way Splitting Vol. 12, 1-292
UCD Night Service Invocation Enhancements Vol. 12, 1-294
UCD on EBS and UCD SD Point Vol. 15, 1-340
Uniform Call Distribution (to 500/2500 Telephone Sets) Vol. 12, 1-310
Uniform Call Distribution from Queue Vol. 12, 1-324

Variable Stutter Dial Tone Vol. 13, 1-385
Virtual Access to Private Networks Vol. 14, 1-39
Wild Card Key Vol. 12, 1-354
PRTN2CCD, table
datafilling Vol. 15, 1-131

R

RCCINV, table
datafilling Vol. 14, 2-103
RCSINV, table
datafilling Vol. 13, 2-140
RCTINV, table
datafilling Vol. 13, 2-143
RCUINV, table
datafilling Vol. 13, 2-141
REASON, table
datafilling Vol. 14, 3-9
REASONS, table
datafilling Vol. 11, 2-250, Vol. 13, 2-18, Vol. 13, 4-80, Vol. 14, 2-86, Vol. 14, 2-385, Vol. 15, 2-25, Vol. 15, 2-51, Vol. 15, 2-52
release applicability
ACD Interaction with IVR Vol. 16, 2-29
REMNACD, table
datafilling Vol. 16, 4-54, Vol. 16, 4-68, Vol. 16, 12-18, Vol. 16, 13-21
REPLCODE, table
datafilling Vol. 15, 1-59
REPLNAME, table
datafilling Vol. 15, 1-58
requirements
ACD Interaction with IVR Vol. 16, 2-29
ICM Message Waiting Activation/Deactivation Vol. 16, 9-46
RESFEAT, table
datafilling Vol. 13, 2-95
RESOFC, table
datafilling Vol. 15, 7-12
restrictions
2-Way Digital FX Trunk - Business Services Vol. 11, 2-4
3-Way Conference/Transfer Vol. 11, 2-11
3WC Dial 0 for 608 Cord Board Vol. 11, 2-16
3WC/Call Transfer for UCD Vol. 11, 2-27
3WC/CXR to 2500 Set Call Waiting Interactions Vol. 11, 2-32
6 Port Conference Circuit Use Control Vol. 11, 2-35
A/C Activate/Deactivate of CFU/CFI Vol. 12, 3-5
AC to IBNISUP Interworking Vol. 12, 3-13
Access Feature Grouping Vol. 15, 4-28
Access to CCSA (BV0420) Vol. 11, 2-44
Access to CO from PBX Vol. 11, 2-51
Access to ETN Vol. 11, 2-60
Access to Special Service Facilities Vol. 11, 2-65
Account Codes Vol. 12, 3-17
ACD - Mgmt Rep 2 Way Data Stream Vol. 16, 2-68
ACD Access Feature Grouping Vol. 16, 2-4
ACD CompuCALL Vol. 16, 3-29
ACD Interaction with IVR Vol. 16, 2-31
ACD Night Service Call Queue Clearing Vol. 16, 2-81
ACD Nodal Treatment in NACD Vol. 16, 4-5
ACD on 2500 Set Vol. 16, 2-89
ACD Remote Load Management I Vol. 16, 2-111
ACD Supergroup Vol. 16, 4-19
ACD-Load Management III Vol. 16, 2-42
AC-Extended Calls to CFB/CFD Vol. 11, 2-40
ANI Information in SMDR Output Vol. 12, 3-25
ARS - (Basic) (BV0506) Vol. 12, 3-86
Attendant Call Detail Entry Vol. 12, 3-40
Attendant Call Park Recall Timer Vol. 11, 2-74
Attendant Call Selection Vol. 11, 2-78
Attendant Camp-On Vol. 11, 2-83
Attendant Conference (Maximum Six Conferees) Vol. 11, 2-92
Attendant Console Call Hold Recall Vol. 11, 2-102
Attendant Console Display Vol. 11, 2-112
Attendant Console End-to-End Signalling Vol. 11, 2-115
Attendant Console OM on an Individual Console Basis Vol. 12, 2-15

Attendant Control of Trunk Group Access Vol. 11, 2-123
Attendant Control of VFG Vol. 12, 3-51
Attendant Display of Queued Calls by ICI Key Vol. 11, 2-130
Attendant Locked Loop Operation Vol. 11, 2-137
Attendant Message Waiting Vol. 12, 3-62
Attendant Release Upon Completion of Dialing Vol. 11, 2-141
Attendant Set Up Conference
10 or More Conferees Vol. 12, 3-73
Attendant Speed Calling Vol. 11, 2-146
Attendant to Recorded Announcement Vol. 11, 2-153
Attendant to UCD Vol. 11, 2-157
Attendant Transfer Vol. 11, 2-166
Attendent - Auto Dial Vol. 11, 2-68
Audio Input on Incoming Calls in Queue (BV0602) Vol. 11, 2-172
Audio Interlude (BC0946) Vol. 11, 2-180
Audio Table Expansion (AD0822) Vol. 11, 2-193
Authcode for MDR Vol. 14, 4-13
Authorization Codes (BV0494) Vol. 12, 3-82
Automatic Intercept System (AIS) Enhancement Vol. 11, 2-201
Automatic Line Vol. 11, 2-216
Automatic Line and MADN Vol. 14, 2-3
Automatic Recall Vol. 11, 2-222
Base ACD Vol. 16, 2-155
Bellcore AMA Enhanced Automatic Route Selection Translations Vol. 14, 4-20
Blind Transfer Recall Vol. 11, 2-232
Blind Transfer Recall Identification Vol. 11, 2-249
Block Calling Name/Number Delivery Blocking per Call Vol. 15, 7-8
BOC AMA Call Code 032 Vol. 14, 4-31
BR0747 CCSA VFG Option Vol. 15, 1-3
Business Set Busy Indicator Vol. 14, 2-11
Business Set Call Waiting Originate Vol. 14, 2-19
Business Set Dial Call Waiting Vol. 14, 2-29
Busy Verification - Stations Vol. 11, 2-261
Busy Verification - Trunks Vol. 11, 2-272
Call Back Queuing (Basic) Vol. 12, 3-95
Call Forcing Tone Optionality Vol. 16, 2-213
Call Forward All Calls Vol. 11, 2-287
Call Forward Busy Vol. 11, 2-296
Call Forward Busy - Inhibit Make & Inhibit Line Busy Vol. 12, 3-109
Call Forward Busy/Don't Answer - Internal/External Vol. 12, 3-122
Call Forward Do Not Answer and Call Waiting Interaction Vol. 11, 2-327, Vol. 12, 3-142
Call Forward Indication Vol. 15, 9-5
Call Forward No Answer Vol. 11, 2-310
Call Forward Prevention Enhancements Vol. 12, 3-157
Call Forward Timed Vol. 12, 3-182
Call Forward/Automatic Dial Display Vol. 14, 2-39
Call Forwarding of Call Waiting Calls Vol. 12, 3-196
Call Hold Vol. 11, 2-340
Call Park Vol. 11, 2-353
Call Park Recall Identification Vol. 14, 3-8
Call Pickup Vol. 11, 2-367
Call Pickup Transparency Vol. 11, 2-374
Call Request Call Processing Enhancements Vol. 11, 2-376, Vol. 12, 3-201
Call Request Retrieve/Key Short Hunt Interaction Control Vol. 12, 3-204
Call Transfer Enhancement Vol. 11, 2-381
Call Waiting Vol. 11, 2-395
Call Waiting - Originating Vol. 11, 2-413
Call waiting 1A transparency issues Vol. 12, 3-210
Calling Name Delivery on MADN (CNAMD on MADN) Vol. 13, 2-4
Calling Name Inspect Key Vol. 15, 2-5
Calling Name/Number Delivery Blocking (CNNB) Vol. 15, 7-25
Calling Number and NCOS Display on Attendant Console Vol. 13, 4-25
Camp On with Music Vol. 11, 2-425
CCSA Line Option Vol. 14, 4-35
CFBL Inhibit Line Busy/Inhibit MB Enhancements Vol. 12, 3-223
CFD from Hunt Group Station Vol. 11, 2-433
CFD Interaction with Three-Way Calling Vol. 11, 2-443
CFGDA for Hunt Groups Vol. 11, 2-447

CFW for MADN Secondary Members
Vol. 14, 3-19
Change EBS Features During Talking State
Vol. 12, 3-230
Change Line Class Codes via SERVORD
Vol. 12, 3-256
Class of Service Restrictions Vol. 11, 2-456
CLASS on MBS/MADN Base Vol. 13, 2-13
CLASS on MDC Base Vol. 13, 2-40
Class on MVP Base Vol. 13, 2-69
CLEN for EBS Vol. 12, 3-276
Code Call Access Vol. 11, 2-462
Code Calling - Line Termination
Vol. 11, 2-470
Code Restriction Vol. 11, 2-478
CompuCALLEnhancements-Screen-Assist-ed Telephony Vol. 16, 3-132
CompuCALL Integration with ICCM
Vol. 16, 7-15
CompuCALL Transport Enhancements
Vol. 16, 5-17
Conference Join Vol. 11, 2-486
Control of Multiple Call Forwarding
Vol. 12, 3-286
COT Enhancement Vol. 13, 2-80
CPU Datafill Enhancements Vol. 11, 2-494
Customer Administration of Data
Vol. 14, 4-40
Customer Dialed Account Recording (CDAR) Vol. 14, 4-59
Customer Group Transparency
Vol. 11, 2-501
Customer Network Data Changes
Vol. 14, 4-74
Customer Screening at the Trunk Test Posi-tion Vol. 14, 4-89
Customer Service Change Via SERVORD
Vol. 14, 4-100
Cut Through Dialing Vol. 12, 3-297
Cut Thru and Thru Dialing Interaction
Vol. 12, 3-304
Cut Thru Dialing for IBN Lines & A/C
Vol. 12, 3-310
Denied Incoming Vol. 11, 2-510
Dial - Call Waiting Vol. 11, 2-519
Dialtone Passback via PX Trunks for MDC
Vol. 12, 3-318
Dictation Access and Control (DTMF Only)
Vol. 11, 2-531
Direct Inward Dialing (DID) Vol. 14, 4-108
Direct Inward System Access (DISA)
Vol. 12, 3-329
Direct Outward Dialing (DOD)
Vol. 11, 2-537
Direct Station Selection/Busy Lamp Field for MBS Vol. 15, 3-12
Directed Call Park Vol. 11, 2-542
Directed Call Pickup - Barge In
Vol. 11, 2-554
Directed Call Pickup - Non Barge In
Vol. 11, 2-563
DISA
Invalid Authcode Treatment Option
Vol. 12, 3-340
DISA - Remove Auth Code Timeout
Vol. 12, 3-345
DISA Enhancements Vol. 12, 3-333
DISA Third Dial Tone Vol. 12, 3-351
Display Called About Number Vol. 16, 2-231
Distinctive Call Waiting Ringback
Vol. 12, 3-357
Distinctive Call Waiting Tones
Vol. 11, 2-577
Distinctive Ringing Vol. 11, 2-583
Distinctive Ringing Enhancements
Vol. 11, 2-595
Do Not Disturb Vol. 12, 2-23
DT after CFW Cancel and Spd Call Pro-gramming Vol. 12, 3-370
DTMF Outpulsing on a Line Vol. 11, 2-611
Dynamic Measurements Vol. 12, 2-32
E911 Single Button Transfer Operation
Vol. 15, 3-22
EAEO - IBN PIC Using SERVORD
Vol. 12, 3-376
EBS as a Message Center Vol. 14, 2-43
EBS Call Forwarding on a per Key Basis
Vol. 14, 3-38
ECM/SCAI Support for Non-ACD - Ph 1
Vol. 16, 3-149
End to End Signalling via Speed Call
Vol. 11, 2-622
Enhanced EBS Reason Display Vol. 14, 2-85

Enhanced Handling of ACD Re-Enqueued Calls Vol. 16, 2-253
Enhanced MADN Call Control Vol. 14, 3-75
Enhanced SERVORD II Vol. 12, 3-389
ERWT for Lines, Trunks for ARS, Call Back Queue Features Vol. 12, 3-397
ESN - Answer Supervision Generation Vol. 12, 3-404
ESN - Authorization Codes Vol. 12, 3-410
ESN - Call-Back Queuing Vol. 12, 3-423
ESN - Network Automatic Route Selection (TEHO and HEHO) Vol. 15, 1-9
ESN - Network Class of Service Vol. 15, 1-25
ESN - Network Information Signals Vol. 15, 1-32
ESN - Network Speed Call Vol. 15, 1-55
ESN - Off-hook Queuing Vol. 12, 3-433
Executive Message Service Enhancement - Multi EMW per DN Vol. 14, 2-92
Executive Right of Way Vol. 11, 2-631
Fast Transfer for Meridian Business Set Vol. 15, 3-32
Flexible Console Alerting Vol. 11, 2-641
Flexible Display Language Vol. 12, 2-37
Flexible Intercept Vol. 11, 2-648
Flexible Station Controlled Conference (500/2500 Sets) Vol. 12, 3-445
Forced Announcements for NACD Vol. 16, 4-35
Generalized Distinctive Ringing Vol. 11, 2-652
Group Intercom All Call Vol. 14, 3-94
Group Number Feature Control Vol. 13, 1-5
IBN - Optional Call Forward Links Vol. 13, 1-77
IBN & ESB Compatibility Vol. 13, 1-73
IBN Auth Codes for Alternate Route Selection (ARS) Vol. 13, 1-44
IBN Call Forward Enhancements Vol. 13, 1-52
IBN Call Forward Validation Vol. 11, 2-660
IBN Cancel Call Waiting Vol. 11, 2-669
IBN Class 5 INWATS Vol. 13, 1-57
IBN Class 5 Psuedo OUTWATS Vol. 13, 1-65
IBN Feature Activation OMs I Vol. 11, 2-678
IBN ISUP NETINFO Translations Vol. 13, 3-14
IBN LCC Compatibility with FRO Line Option Vol. 11, 2-684
IBN Outpulsing to POTS Trunks Vol. 11, 2-702
IBN Quantity Control (100 Lines) Vol. 11, 2-705
IBN Trunks with ISUP Signalling Vol. 13, 1-88
IBNRTE Table Capacity Increase Vol. 11, 2-708
ICM Configuration Management Vol. 16, 9-32
ICM Message Waiting Activation/Deactivation Vol. 16, 9-52
ICM TAPI Extensions Vol. 16, 9-74
ICM Three-Way Call Enhanced Status Reporting Vol. 16, 9-92
ICM Variable Wrap Reporting Vol. 16, 9-101
ICM Workqueue Re-Engineering Vol. 16, 9-110
IDDD via ARS Vol. 15, 1-127
Immediate Answer Reporting for IBN Vol. 11, 2-715
Immediate Notification of Priority Enqueued Calls Vol. 12, 2-45
Increase Auth Codes per Customer Group Vol. 13, 1-109
Increase in Number of IBN Customer Groups Vol. 11, 2-718
Increase Number of Equivalent DN Appearances for IBN Vol. 11, 2-724
Individual Page from GIC Vol. 14, 3-104
Interactive Display Menu on MBS Sets Vol. 15, 3-52
Interposition Calls and Transfers Vol. 11, 2-729
INWATS to Direct Inward System Access Vol. 13, 1-112
ISUP Shared Trunking Enhancement Vol. 13, 3-34
Killer Trunk Report Separation Vol. 15, 1-134
Last Number Redial (LNR) Vol. 12, 1-2
Last Number Redial from Set Vol. 14, 3-113
Lockout Vol. 12, 1-16

Loud Speaker & Radio Paging Access Vol. 12, 1-20
Loudspeaker Paging - Line Termination Vol. 12, 1-26
M5209 Introduction Vol. 14, 2-99
MACD Nodal Service Observing Vol. 16, 2-269
MACD PIN Configuration and Control Vol. 16, 2-281
MADN and Conference Interaction Vol. 12, 1-35
MADN Bridging - 3 Way Call Vol. 14, 3-118
MADN Cut-off on Disconnect (COD) Vol. 14, 3-130
MADN Ring Forward Vol. 14, 3-139
MADN Service Orders Vol. 14, 2-114
Make Set Busy Except GIC Vol. 14, 3-154
MAP Alarm Level Screening Vol. 15, 1-147
MAP Display for Attendant OM Vol. 12, 1-37
MBG Alternate Terminating Number Billing Vol. 13, 3-46
MBG Enabling of Feature Networking Vol. 13, 3-54
MBG Feature Networking Control Vol. 13, 3-59
MBG II - Support of IBN7 Trunk Features Vol. 13, 3-71
MBG III - Support of Private Numbering Plan Vol. 13, 3-79
MBG IV - Support of Network EMW Vol. 13, 3-116
MBG Redirection Enhancements for ISUP IBN Trunks Vol. 13, 4-36
MBS 30-Port Conference Vol. 12, 1-43
MBS Auto Answer Back Vol. 14, 2-132
MBS Automatic Dial Vol. 14, 2-138
MBS Automatic Line Vol. 14, 2-145
MBS Busy Override Vol. 14, 2-151
MBS Call Back Queuing Vol. 14, 2-165
MBS Call Forward All Calls Feature Key S/W Vol. 14, 2-181
MBS Call Park Vol. 14, 2-194
MBS Call Pickup Feature Key S/W Vol. 14, 2-212
MBS Call Waiting Vol. 14, 2-220
MBS Display Called Number Vol. 14, 2-228
MBS Display Calling Number Vol. 14, 2-236
MBS End to End Signalling Vol. 14, 2-241
MBS Feature Code Access Vol. 14, 2-245
MBS Feature Display Vol. 14, 2-249
MBS Group Intercom Vol. 14, 2-259
MBS Held Calls Vol. 14, 2-265
MBS II Templates Vol. 14, 2-120
MBS Individual Business Line Vol. 14, 2-270
MBS Intercom Vol. 14, 2-282
MBS Listen on Hold Vol. 14, 2-287
MBS MADN SCA/MCA (across Switch) Vol. 14, 2-291
MBS Make Set Busy Vol. 14, 2-300
MBS Malicious Call Hold Vol. 14, 2-309
MBS Message Waiting Vol. 13, 1-125
MBS Onhook Dialing Vol. 14, 2-314
MBS Power Feature - Name Programming Vol. 15, 3-68
MBS Privacy Release (across Switch) Vol. 14, 2-319
MBS Query Time Key Vol. 14, 2-330
MBS Ring-Again Feature Key S/W Vol. 14, 2-335
MBS Speed Calling Feature Key S/W Vol. 14, 2-345
MBS Three-Way Calling Transfer Vol. 14, 2-357
MDC AFG Add Option Vol. 15, 4-80
MDC Circuit Test Enhancement Vol. 14, 2-367
MDC Copy Feature Set Vol. 15, 4-61
MDC CUSTENG Robustness Vol. 12, 1-51
MDC DSS/BLF Set Based Vol. 15, 5-7
MDC Enhanced WATS Vol. 15, 1-155
MDC MBS Interactive Display Vol. 15, 4-92
MDC Single Button Transfer Vol. 15, 3-76
MDC Single Line Queue Vol. 15, 5-28
MDC to 10-digit routing Vol. 15, 10-8
MDC to Universal routing Vol. 15, 11-9
MDC Variable CDAR Vol. 13, 1-135
MDR Data in the AMA Stream Vol. 15, 1-200
Meet Me Page Vol. 13, 1-165
Meet-Me Conference Vol. 12, 1-61
Meet-Me Conference Feature Expansion Vol. 13, 1-154

Message Service - Leave Message Vol. 14, 2-381
Message Service - List Management Vol. 14, 2-400
Message Waiting Lamp Update - Link Phone Vol. 13, 1-177
Multi-location Business Group I Vol. 13, 3-123
Multipilot Directory Numbers on MLH Group Vol. 15, 1-220
Multiple Position Hunt with Queue Vol. 13, 1-193
Music on Hold for EBS Vol. 14, 3-164
MVP Dial Plan Vol. 12, 1-69
Name Display for MADN Members Vol. 14, 3-186
NAS Features Optionality Vol. 13, 4-40
Network Access Registers (NARS) Vol. 15, 6-16
Network Attendant Control Vol. 13, 4-46
Network Attendant Recall Vol. 13, 4-50
Network Camp-On-II Vol. 13, 4-53
Network Dial Plan Display Vol. 13, 4-59
Network Display Enhancement Vol. 13, 4-78
Network Feature Access Restriction Vol. 15, 8-6
Network Intelligent Call Management Vol. 16, 7-30
Network Message Waiting Indicator (MWI) Vol. 13, 4-87
Network Name Display Vol. 13, 4-106
Network Name Display for Attendant Consoles Vol. 13, 4-135
Network Wide Ring Again Vol. 13, 4-153
Networked ACD on CCS7 Vol. 16, 4-50
Networked ACD on PRA Vol. 16, 4-65
Networked EBS Display Vol. 13, 4-170
Night Service - Flexible Vol. 12, 1-80
Night Service Trunk Answer from Any Station - Fixed Vol. 12, 1-87
Night Service Trunk Answer From Any Station - TAFAS Vol. 12, 1-94
Non-Data Link Console Call Extension Vol. 13, 1-211
Off-hook Queuing Vol. 13, 1-220
OHQ, CBQ for OUTWATS VFG Vol. 13, 1-228
Optional Answer Supervision from Attendant Queue Vol. 12, 1-103
Originating/Terminating Line Select (TLS) Vol. 14, 3-198
Outgoing Restriction Control Vol. 15, 1-227
Override ACR for CFU Vol. 12, 1-110
Patch Source Inclusion I Vol. 12, 1-118
Patch Source Inclusion II Vol. 12, 1-130
Peg Counts on LDNs on Attendant Consoles Vol. 12, 2-50
Pending Order File (POF) Enhancements Vol. 15, 1-248
Permanent Hold (500/2500 Sets) Vol. 12, 1-139
Personal Call Screening of Call Forwarding Vol. 13, 1-240
PF Robustness - Call Forwarding per Key (CFK) Vol. 15, 4-105
PF Robustness - Call Pickup Separate Keys Compatibility Vol. 15, 4-121
Position Busy Vol. 12, 1-148
Power Feature Audit Trails Vol. 15, 3-87
Power Features Enhancements I Vol. 15, 3-101
Power Features Installer Application Vol. 15, 3-139
Preset Conference Vol. 13, 1-248
Preset Conference (Large) Vol. 15, 1-260
Query Functional Station Grouping Vol. 12, 1-156
Queueing OMs per Route Vol. 13, 1-274
Remove Timeout between Authcode/Secondary Dial Tone Vol. 13, 1-277
Repeated Alert for MBS Vol. 14, 3-207
Ring Again Vol. 12, 1-161
Ring Again Cancellation Timer Vol. 12, 1-169
Ring Again on Hunt Groups Vol. 12, 1-176
Ring Reminder Off/On Option per Line Vol. 13, 1-306
RLT with No Third Party Interaction Vol. 14, 1-6
Second and Third Delay Announcements Vol. 12, 1-187
Secrecy Vol. 12, 1-193
Semi-restricted Incoming Lines Call Intercept Vol. 12, 1-202

Separate SMDR Output Files by Cust Group Vol. 13, 1-310
Series completion Vol. 15, 1-277
Series completion enhancements Vol. 15, 1-282
Service Analysis for IBN Vol. 15, 1-292
SERVORD cleanup for MBS Vol. 14, 2-405
Setting Attendant Recall Timers to Zero Vol. 12, 1-208
Short Hunt on MBS Vol. 14, 2-417
Simplified Dialing Vol. 12, 1-212
SLE on MBS/MADN Vol. 13, 2-91
SLE on MDC Vol. 13, 2-114
SMDR Derived from Bellcore AMA Record Vol. 15, 1-294
SMDR for ONI Lines Vol. 13, 1-320
Special Intercept Through Service Orders Vol. 12, 1-236
Specific Key Ringback on Ring Again Request on EBS Vol. 14, 3-215
Speed Calling Group - Long List Vol. 12, 1-242
Speed Calling Individual - Short List Vol. 12, 1-249
Station Activated DND with Feature Active Reminder Vol. 12, 1-256
Station Activation of CFB/CFD Vol. 13, 1-327
Station Camp On for Meridian Business Set Vol. 15, 2-42
Station Message Detail Recording Vol. 13, 1-338
Station Message Waiting Vol. 13, 1-347
Station Specific Auth Codes Vol. 13, 1-358
Station Specific Authcode - CDC Enhancements Vol. 13, 1-367
Storing of 24 Dialed Digits Vol. 12, 1-265
Stuttered Dial Tone for Message Waiting Vol. 13, 1-373
Supervisory Console (Basic) Vol. 13, 1-379
Suspend and Restore Remote Call Forward Lines Vol. 13, 1-382
Teen Service on MDC Vol. 13, 2-130
Terminating Billing Option Vol. 15, 1-302
TGB/TAC Access thru Special Keys Vol. 12, 1-268
Through Dialing Vol. 12, 1-273
Time of Day NCOS Vol. 15, 1-313
Time of Day Routing Vol. 15, 1-325
Trouble Key on IBN Console Vol. 12, 1-276
Trunk Busy Verify Tone Vol. 12, 1-283
TVDS - II Vol. 15, 1-334
Two-Way Splitting Vol. 12, 1-292
UCD Night Service Invocation Enhancements Vol. 12, 1-295
UCD on EBS and UCD SD Point Vol. 15, 1-344
UCD Queue Status Lamp Vol. 12, 1-302
Uniform Call Distribution (to 500/2500 Telephone Sets) Vol. 12, 1-313
Uniform Call Distribution from Queue Vol. 12, 1-325
Variable Length/Same Leading Digit(s) Translation Vol. 12, 1-330
Variable Speed Call Access Code Vol. 12, 1-341
Variable Stutter Dial Tone Vol. 13, 1-386
Variable Types of Outpulsing on Same Call Vol. 12, 1-351
VFG INWATS Ovfl Totals to AMA Tape - IBN Vol. 13, 1-393
VFG Look Ahead Vol. 13, 1-400
VFG Usage Data Vol. 13, 1-404
Virtual Access to Private Networks Vol. 14, 1-85
VMX Interface Vol. 15, 1-361
Wild Card Key Vol. 12, 1-354
routing
trunk and call Vol. 16, 13-8
trunk groups Vol. 16, 11-7, Vol. 16, 12-8

S

SCAICOMS, table
datafilling Vol. 16, 3-54, Vol. 16, 5-19
SCAIGRP, table
datafilling Vol. 16, 3-61
SCAIPROF, table
datafilling Vol. 16, 3-99, Vol. 16, 7-19
SCAISSRV, table
datafilling Vol. 16, 2-234, Vol. 16, 3-64, Vol. 16, 3-135, Vol. 16, 3-151, Vol. 16, 7-18, Vol. 16, 7-33, Vol. 16, 9-103

SCGRP, table
datafilling Vol. 13, 1-195
SDGRP, table
datafilling Vol. 11, 2-685, Vol. 12, 1-303, Vol. 13, 1-197
servord
ICM Message Waiting Activation/Deactivation Vol. 16, 9-64
SFWALARM, table
datafilling Vol. 15, 1-321, Vol. 15, 1-331
signaling
MDC to 10-digit routing Vol. 15, 10-2
MDC to Universal routing Vol. 15, 11-1
SLELIST, table
datafilling Vol. 13, 2-97
SORLIST, table
datafilling Vol. 15, 1-237
station message detail recording
ACD Interaction with IVR Vol. 16, 2-31
ICM Message Waiting Activation/Deactivation Vol. 16, 9-54
STDPRTCT.STDPRT, table
datafilling Vol. 12, 3-322
STN, table
datafilling Vol. 11, 2-264, Vol. 11, 2-276, Vol. 11, 2-398, Vol. 11, 2-406, Vol. 11, 2-419, Vol. 11, 2-525, Vol. 11, 2-559, Vol. 11, 2-580, Vol. 11, 2-634, Vol. 12, 3-400, Vol. 12, 3-437, Vol. 13, 1-223, Vol. 13, 1-255, Vol. 13, 2-135, Vol. 14, 2-155, Vol. 15, 1-269
SUBGRP, table
datafilling Vol. 12, 2-46
SVRCKT, table
datafilling Vol. 12, 1-29

T

table flow
2-Way Digital FX Trunk - Business Services Vol. 11, 2-3
3-Way Conference/Transfer Vol. 11, 2-9
3WC Dial 0 for 608 Cord Board Vol. 11, 2-16
3WC/Call Transfer for UCD Vol. 11, 2-27
3WC/CXR to 2500 Set Call Waiting Interactions Vol. 11, 2-32
6 Port Conference Circuit Use Control Vol. 11, 2-35
A/C Activate/Deactivate of CFU/CFI Vol. 12, 3-4
AC to IBNISUP Interworking Vol. 12, 3-13
Access Feature Grouping Vol. 15, 4-26
Access to CCSA (BV0420) Vol. 11, 2-44
Access to CO from PBX Vol. 11, 2-50
Access to ETN Vol. 11, 2-58
Access to Special Service Facilities Vol. 11, 2-64
Account Codes Vol. 12, 3-17
ACD - Mgmt Rep 2 Way Data Stream Vol. 16, 2-66
ACD Access Feature Grouping Vol. 16, 2-3
ACD CompuCALL Vol. 16, 3-26
ACD Interaction with IVR Vol. 16, 2-30
ACD Night Service Call Queue Clearing Vol. 16, 2-80
ACD Nodal Treatment in NACD Vol. 16, 4-3
ACD on 2500 Set Vol. 16, 2-87
ACD Remote Load Management I Vol. 16, 2-107
ACD Supergroup Vol. 16, 4-16
ACD-Load Management III Vol. 16, 2-41
AC-Extended Calls to CFB/CFD Vol. 11, 2-39
ANI Information in SMDR Output Vol. 12, 3-25
ARS - (Basic) (BV0506) Vol. 12, 3-86
Attendant Call Detail Entry Vol. 12, 3-38
Attendant Call Park Recall Timer Vol. 11, 2-72
Attendant Call Selection Vol. 11, 2-78
Attendant Camp-On Vol. 11, 2-81
Attendant Conference (Maximum Six Conferees) Vol. 11, 2-89
Attendant Console Call Hold Recall Vol. 11, 2-101
Attendant Console Display Vol. 11, 2-112
Attendant Console End-to-End Signalling Vol. 11, 2-115
Attendant Console OM on an Individual Console Basis Vol. 12, 2-14
Attendant Control of Trunk Group Access Vol. 11, 2-123
Attendant Control of VFG Vol. 12, 3-49

Attendant Display of Queued Calls by ICI Key Vol. 11, 2-128
Attendant Locked Loop Operation Vol. 11, 2-137
Attendant Message Waiting Vol. 12, 3-60
Attendant Release Upon Completion of Dialing Vol. 11, 2-141
Attendant Set Up Conference
10 or More Conferees Vol. 12, 3-70
Attendant Speed Calling Vol. 11, 2-144
Attendant to Recorded Announcement Vol. 11, 2-153
Attendant to UCD Vol. 11, 2-154
Attendant Transfer Vol. 11, 2-166
Audio Input on Incoming Calls in Queue (BV0602) Vol. 11, 2-170
Audio Interlude (BC0946) Vol. 11, 2-180
Audio Table Expansion (AD0822) Vol. 11, 2-193
Authcode for MDR Vol. 14, 4-13
Authorization Codes (BV0494) Vol. 12, 3-82
Automatic Intercept System (AIS) Enhancement Vol. 11, 2-199
Automatic Line Vol. 11, 2-216
Automatic Line and MADN Vol. 14, 2-3
Automatic Recall Vol. 11, 2-220
Base ACD Vol. 16, 2-150
Bellcore AMA Enhanced Automatic Route Selection Translations Vol. 14, 4-20
Blind Transfer Recall Vol. 11, 2-232
Blind Transfer Recall Identification Vol. 11, 2-247
Block Calling Name/Number Delivery Blocking per Call Vol. 15, 7-4
BOC AMA Call Code 032 Vol. 14, 4-31
BR0747 CCSA VFG Option Vol. 15, 1-2
Business Set Busy Indicator Vol. 14, 2-9
Business Set Call Waiting Originate Vol. 14, 2-18
Business Set Dial Call Waiting Vol. 14, 2-26
Busy Verification - Stations Vol. 11, 2-258
Busy Verification - Trunks Vol. 11, 2-269
Call Back Queuing (Basic) Vol. 12, 3-95
Call Forcing Tone Optionality Vol. 16, 2-212
Call Forward All Calls Vol. 11, 2-285
Call Forward Busy Vol. 11, 2-294
Call Forward Busy - Inhibit Make & Inhibit Line Busy Vol. 12, 3-102
Call Forward Busy/Don't Answer - Internal/External Vol. 12, 3-118
Call Forward Do Not Answer and Call Waiting Interaction Vol. 11, 2-324, Vol. 12, 3-139
Call Forward Indication Vol. 15, 9-4
Call Forward No Answer Vol. 11, 2-307
Call Forward Prevention Enhancements Vol. 12, 3-152
Call Forward Timed Vol. 12, 3-180
Call Forward/Automatic Dial Display Vol. 14, 2-39
Call Forwarding of Call Waiting Calls Vol. 12, 3-194
Call Hold Vol. 11, 2-335
Call Park Vol. 11, 2-349
Call Park Recall Identification Vol. 14, 3-6
Call Pickup Vol. 11, 2-365
Call Pickup Transparency Vol. 11, 2-373
Call Request Call Processing Enhancements Vol. 11, 2-376, Vol. 12, 3-201
Call Request Retrieve/Key Short Hunt Interaction Control Vol. 12, 3-204
Call Transfer Enhancement Vol. 11, 2-380
Call Waiting Vol. 11, 2-393
Call Waiting - Originating Vol. 11, 2-412
Call waiting 1A transparency issues Vol. 12, 3-210
Call Waiting for 3-Way Calling Vol. 11, 2-404
Calling Name Delivery on MADN (CNAMD on MADN) Vol. 13, 2-4
Calling Name Inspect Key Vol. 15, 2-3
Calling Name/Number Delivery Blocking (CNNB) Vol. 15, 7-22
Calling Number and NCOS Display on Attendant Console Vol. 13, 4-25
Camp On with Music Vol. 11, 2-423
CCSA Line Option Vol. 14, 4-35
CFBL Inhibit Line Busy/Inhibit MB Enhancements Vol. 12, 3-220
CFD from Hunt Group Station Vol. 11, 2-433
CFD Interaction with Three-Way Calling Vol. 11, 2-443
CFGDA for Hunt Groups Vol. 11, 2-447

CFW for MADN Secondary Members
Vol. 14, 3-19
Change EBS Features During Talking State
Vol. 12, 3-230
Change Line Class Codes via SERVORD
Vol. 12, 3-256
Class of Service Restrictions Vol. 11, 2-456
CLASS on MBS/MADN Base Vol. 13, 2-13
CLASS on MDC Base Vol. 13, 2-40
Class on MVP Base Vol. 13, 2-68
CLEN for EBS Vol. 12, 3-273
Code Call Access Vol. 11, 2-462
Code Calling - Line Termination
Vol. 11, 2-468
Code Restriction Vol. 11, 2-478
CompuCALLEnhancements-Screen-Assist-ed Telephony Vol. 16, 3-130
CompuCALL Integration with ICCM
Vol. 16, 7-14
CompuCALL Transport Enhancements
Vol. 16, 5-17
Conference Join Vol. 11, 2-485
Control of Multiple Call Forwarding
Vol. 12, 3-284
COT Enhancement Vol. 13, 2-79
CPU Datafill Enhancements Vol. 11, 2-494
Customer Administration of Data
Vol. 14, 4-40
Customer Dialed Account Recording (CDAR) Vol. 14, 4-57
Customer Group Transparency
Vol. 11, 2-500
Customer Network Data Changes
Vol. 14, 4-71
Customer Screening at the Trunk Test Position Vol. 14, 4-89
Customer Service Change Via SERVORD
Vol. 14, 4-98
Cut Through Dialing Vol. 12, 3-297
Cut Thru and Thru Dialing Interaction
Vol. 12, 3-303
Cut Thru Dialing for IBN Lines & A/C
Vol. 12, 3-310
Denied Incoming Vol. 11, 2-508
Dial - Call Waiting Vol. 11, 2-519
Dialtone Passback via PX Trunks for MDC
Vol. 12, 3-317
Dictation Access and Control (DTMF Only)
Vol. 11, 2-531
Direct Inward Dialing (DID) Vol. 14, 4-107
Direct Inward System Access (DISA)
Vol. 12, 3-327
Direct Outward Dialing (DOD)
Vol. 11, 2-536
Direct Station Selection/Busy Lamp Field for MBS Vol. 15, 3-3
Directed Call Park Vol. 11, 2-542
Directed Call Pickup - Barge In
Vol. 11, 2-554
Directed Call Pickup - Non Barge In
Vol. 11, 2-563
DISA
Invalid Authcode Treatment Option
Vol. 12, 3-338
DISA - Remove Auth Code Timeout
Vol. 12, 3-345
DISA Enhancements Vol. 12, 3-333
DISA Third Dial Tone Vol. 12, 3-351
Display Called About Number Vol. 16, 2-229
Distinctive and Ring Again Ringing
Vol. 11, 2-571
Distinctive Call Waiting Ringback
Vol. 12, 3-357
Distinctive Call Waiting Tones
Vol. 11, 2-576
Distinctive Ringing Vol. 11, 2-583
Distinctive Ringing Enhancements
Vol. 11, 2-593
Do Not Disturb Vol. 12, 2-22
DT after CFW Cancel and Spd Call Programming Vol. 12, 3-370
DTMF Outpulsing on a Line Vol. 11, 2-609
Dynamic Measurements Vol. 12, 2-32
E911 Single Button Transfer Operation
Vol. 15, 3-21
EAEO - IBN PIC Using SERVORD
Vol. 12, 3-376
EBS as a Message Center Vol. 14, 2-42
EBS as a Message Center - Enhancements
Vol. 14, 2-52
EBS Call Forwarding on a per Key Basis
Vol. 14, 3-34
ECM/SCAI Support for Non-ACD - Ph 1
Vol. 16, 3-146

End to End Signalling via Speed Call
Vol. 11, 2-621
Enhanced EBS Reason Display Vol. 14, 2-83
Enhanced Handling of ACD Re-Enqueued Calls Vol. 16, 2-251
Enhanced MADN Call Control Vol. 14, 3-70
Enhanced SERVORD II Vol. 12, 3-389
ERWT for Lines, Trunks for ARS, Call Back Queue Features Vol. 12, 3-397
ESN - Answer Supervision Generation
Vol. 12, 3-404
ESN - Authorization Codes Vol. 12, 3-410
ESN - Call-Back Queuing Vol. 12, 3-423
ESN - Network Automatic Route Selection (TEHO and HEHO) Vol. 15, 1-8
ESN - Network Class of Service
Vol. 15, 1-25
ESN - Network Information Signals
Vol. 15, 1-31
ESN - Network Speed Call Vol. 15, 1-55
ESN - Off-hook Queuing Vol. 12, 3-432
Executive Message Service Enhancement - Multi EMW per DN Vol. 14, 2-92
Executive Right of Way Vol. 11, 2-629
Fast Transfer for Meridian Business Set
Vol. 15, 3-30
Flexible Console Alerting Vol. 11, 2-639
Flexible Display Language Vol. 12, 2-35
Flexible Intercept Vol. 11, 2-648
Flexible Station Controlled Conference (500/2500 Sets) Vol. 12, 3-443
Forced Announcements for NACD
Vol. 16, 4-31
Generalized Distinctive Ringing
Vol. 11, 2-652
Group Intercom All Call Vol. 14, 3-93
Group Number Feature Control Vol. 13, 1-5
IBN - Optional Call Forward Links
Vol. 13, 1-77
IBN & ESB Compatibility Vol. 13, 1-73
IBN Auth Codes for Alternate Route Selection (ARS) Vol. 13, 1-44
IBN Call Forward Enhancements
Vol. 13, 1-52
IBN Call Forward Validation Vol. 11, 2-658
IBN Cancel Call Waiting Vol. 11, 2-669
IBN Class 5 INWATS Vol. 13, 1-57
IBN Class 5 Psuedo OUTWATS
Vol. 13, 1-64
IBN Feature Activation OMs I Vol. 11, 2-678
IBN ISUP NETINFO Translations
Vol. 13, 3-13
IBN LCC Compatibility with FRO Line Option Vol. 11, 2-681
IBN Outpulsing to POTS Trunks
Vol. 11, 2-702
IBN Quantity Control (100 Lines)
Vol. 11, 2-705
IBN Trunks with ISUP Signalling
Vol. 13, 1-88
IBNRTE Table Capacity Increase
Vol. 11, 2-708
ICM Configuration Management
Vol. 16, 9-32
ICM Message Waiting Activation/Deactivation Vol. 16, 9-50
ICM TAPI Extensions Vol. 16, 9-73
ICM Three-Way Call Enhanced Status Reporting Vol. 16, 9-91
ICM Variable Wrap Reporting Vol. 16, 9-100
ICM Workqueue Re-Engineering
Vol. 16, 9-109
IDDD via ARS Vol. 15, 1-126
Immediate Answer Reporting for IBN
Vol. 11, 2-714
Immediate Notification of Priority Enqueued Calls Vol. 12, 2-45
Increase Auth Codes per Customer Group
Vol. 13, 1-109
Increase in Number of IBN Customer Groups Vol. 11, 2-718
Increase Number of Equivalent DN Appearances for IBN Vol. 11, 2-724
Individual Page from GIC Vol. 14, 3-101
Interactive Display Menu on MBS Sets
Vol. 15, 3-50
Interposition Calls and Transfers
Vol. 11, 2-727
INWATS to Direct Inward System Access
Vol. 13, 1-112
ISUP Shared Trunking Enhancement
Vol. 13, 3-30
Killer Trunk Report Separation
Vol. 15, 1-134

Last Number Redial (LNR) Vol. 12, 1-2
Last Number Redial from Set Vol. 14, 3-111
Lockout Vol. 12, 1-16
Loud Speaker & Radio Paging Access Vol. 12, 1-20
Loudspeaker Paging - Line Termination Vol. 12, 1-26
M5209 Introduction Vol. 14, 2-99
MACD Nodal Service Observing Vol. 16, 2-268
MACD PIN Configuration and Control Vol. 16, 2-279
MADN and Conference Interaction Vol. 12, 1-35
MADN Bridging - 3 Way Call Vol. 14, 3-118
MADN Cut-off on Disconnect (COD) Vol. 14, 3-130
MADN Ring Forward Vol. 14, 3-138
MADN Service Orders Vol. 14, 2-112
Make Set Busy Except GIC Vol. 14, 3-152
MAP Alarm Level Screening Vol. 15, 1-147
MAP Display for Attendant OM Vol. 12, 1-37
MBG Alternate Terminating Number Billing Vol. 13, 3-46
MBG Enabling of Feature Networking Vol. 13, 3-54
MBG Feature Networking Control Vol. 13, 3-59
MBG II - Support of IBN7 Trunk Features Vol. 13, 3-71
MBG III - Support of Private Numbering Plan Vol. 13, 3-77
MBG IV - Support of Network EMW Vol. 13, 3-114
MBG Redirection Enhancements for ISUP IBN Trunks Vol. 13, 4-36
MBS 30-Port Conference Vol. 12, 1-41
MBS Auto Answer Back Vol. 14, 2-130
MBS Automatic Dial Vol. 14, 2-137
MBS Automatic Line Vol. 14, 2-143
MBS Busy Override Vol. 14, 2-149
MBS Call Back Queuing Vol. 14, 2-161
MBS Call Forward All Calls Feature Key S/W Vol. 14, 2-178
MBS Call Park Vol. 14, 2-190
MBS Call Pickup Feature Key S/W Vol. 14, 2-210
MBS Call Waiting Vol. 14, 2-219
MBS Display Called Number Vol. 14, 2-226
MBS Display Calling Number Vol. 14, 2-234
MBS End to End Signalling Vol. 14, 2-241
MBS Feature Code Access Vol. 14, 2-245
MBS Feature Display Vol. 14, 2-249
MBS Group Intercom Vol. 14, 2-258
MBS Held Calls Vol. 14, 2-265
MBS II Templates Vol. 14, 2-120
MBS Individual Business Line Vol. 14, 2-267
MBS Intercom Vol. 14, 2-281
MBS Listen on Hold Vol. 14, 2-287
MBS MADN SCA/MCA (across Switch) Vol. 14, 2-290
MBS Make Set Busy Vol. 14, 2-298
MBS Malicious Call Hold Vol. 14, 2-308
MBS Message Waiting Vol. 13, 1-123
MBS Onhook Dialing Vol. 14, 2-314
MBS Power Feature - Name Programming Vol. 15, 3-66
MBS Privacy Release (across Switch) Vol. 14, 2-317
MBS Query Time Key Vol. 14, 2-328
MBS Ring-Again Feature Key S/W Vol. 14, 2-334
MBS Speed Calling Feature Key S/W Vol. 14, 2-342
MBS Three-Way Calling Transfer Vol. 14, 2-355
MDC AFG Add Option Vol. 15, 4-77
MDC Circuit Test Enhancement Vol. 14, 2-367
MDC Copy Feature Set Vol. 15, 4-61
MDC CUSTENG Robustness Vol. 12, 1-51
MDC DSS/BLF Set Based Vol. 15, 5-4
MDC Enhanced WATS Vol. 15, 1-152
MDC MBS Interactive Display Vol. 15, 4-90
MDC Single Button Transfer Vol. 15, 3-75
MDC Single Line Queue Vol. 15, 5-28
MDC Variable CDAR Vol. 13, 1-132
MDR Data in the AMA Stream Vol. 15, 1-199
Meet Me Page Vol. 13, 1-163
Meet-Me Conference Vol. 12, 1-58

Meet-Me Conference Feature Expansion Vol. 13, 1-152
Message Service - Leave Message Vol. 14, 2-380
Message Service - List Management Vol. 14, 2-400
Message Waiting Lamp Update - Link Phone Vol. 13, 1-177
Multi-location Business Group I Vol. 13, 3-123
Multipilot Directory Numbers on MLH Group Vol. 15, 1-220
Multiple Position Hunt with Queue Vol. 13, 1-191
Music on Hold for EBS Vol. 14, 3-161
MVP Dial Plan Vol. 12, 1-68
Name Display for MADN Members Vol. 14, 3-184
NAS Features Optionality Vol. 13, 4-40
Network Access Registers (NARS) Vol. 15, 6-10
Network Attendant Control Vol. 13, 4-46
Network Attendant Recall Vol. 13, 4-50
Network Camp-On-II Vol. 13, 4-53
Network Dial Plan Display Vol. 13, 4-57
Network Display Enhancement Vol. 13, 4-78
Network Feature Access Restriction Vol. 15, 8-3
Network Intelligent Call Management Vol. 16, 7-28
Network Message Waiting Indicator (MWI) Vol. 13, 4-87
Network Name Display Vol. 13, 4-104
Network Name Display for Attendant Consoles Vol. 13, 4-132
Network Wide Ring Again Vol. 13, 4-152
Networked ACD on CCS7 Vol. 16, 4-44
Networked ACD on PRA Vol. 16, 4-63
Networked EBS Display Vol. 13, 4-170
Night Service - Flexible Vol. 12, 1-79
Night Service Trunk Answer from Any Station - Fixed Vol. 12, 1-86
Night Service Trunk Answer From Any Station - TAFAS Vol. 12, 1-94
Non-Data Link Console Call Extension Vol. 13, 1-211
Off-hook Queuing Vol. 13, 1-220
OHQ, CBQ for OUTWATS VFG Vol. 13, 1-228
Optional Answer Supervision from Attendant Queue Vol. 12, 1-102
Originating/Terminating Line Select (TLS) Vol. 14, 3-195
Outgoing Restriction Control Vol. 15, 1-227
Override ACR for CFU Vol. 12, 1-109
Patch Source Inclusion I Vol. 12, 1-116
Patch Source Inclusion II Vol. 12, 1-127
Peg Counts on LDNs on Attendant Consoles Vol. 12, 2-49
Pending Order File (POF) Enhancements Vol. 15, 1-248
Permanent Hold (500/2500 Sets) Vol. 12, 1-135
Personal Call Screening of Call Forwarding Vol. 13, 1-238
PF Robustness - Call Forwarding per Key (CFK) Vol. 15, 4-104
PF Robustness - Call Pickup Separate Keys Compatibility Vol. 15, 4-119
Position Busy Vol. 12, 1-148
Power Feature Audit Trails Vol. 15, 3-86
Power Features Enhancements I Vol. 15, 3-98
Power Features Installer Application Vol. 15, 3-137
Preset Conference Vol. 13, 1-248
Preset Conference (Large) Vol. 15, 1-260
Query Functional Station Grouping Vol. 12, 1-156
Queueing OMs per Route Vol. 13, 1-274
Remove Timeout between Authcode/Secondary Dial Tone Vol. 13, 1-277
Repeated Alert for MBS Vol. 14, 3-207
Ring Again Vol. 12, 1-159
Ring Again Cancellation Timer Vol. 12, 1-168
Ring Again on Hunt Groups Vol. 12, 1-176
Ring Reminder Off/On Option per Line Vol. 13, 1-305
RLT with No Third Party Interaction Vol. 14, 1-4
Second and Third Delay Announcements Vol. 12, 1-187
Secrecy Vol. 12, 1-193

Semi-restricted Incoming Lines Call Intercept Vol. 12, 1-200
Separate SMDR Output Files by Cust Group Vol. 13, 1-310
Series completion Vol. 15, 1-275
Series completion enhancements Vol. 15, 1-282
Service Analysis for IBN Vol. 15, 1-292
SERVORD cleanup for MBS Vol. 14, 2-405
Setting Attendant Recall Timers to Zero Vol. 12, 1-208
Short Hunt on MBS Vol. 14, 2-415
Simplified Dialing Vol. 12, 1-212
SLE on MBS/MADN Vol. 13, 2-91
SLE on MDC Vol. 13, 2-113
SMDR Derived from Bellcore AMA Record Vol. 15, 1-294
SMDR for ONI Lines Vol. 13, 1-320
Special Intercept Through Service Orders Vol. 12, 1-236
Specific Key Ringback on Ring Again Request on EBS Vol. 14, 3-213
Speed Calling Group - Long List Vol. 12, 1-240
Speed Calling Individual - Short List Vol. 12, 1-247
Station Activation of CFB/CFD Vol. 13, 1-326
Station Camp On for Meridian Business Set Vol. 15, 2-36
Station Message Detail Recording Vol. 13, 1-338
Station Message Waiting Vol. 13, 1-347
Station Specific Auth Codes Vol. 13, 1-356
Station Specific Authcode - CDC Enhancements Vol. 13, 1-365
Storing of 24 Dialed Digits Vol. 12, 1-265
Stuttered Dial Tone for Message Waiting Vol. 13, 1-373
Supervisory Console (Basic) Vol. 13, 1-378
Suspend and Restore Remote Call Forward Lines Vol. 13, 1-381
Teen Service on MDC Vol. 13, 2-128
Terminating Billing Option Vol. 15, 1-298
TGB/TAC Access thru Special Keys Vol. 12, 1-268
Through Dialing Vol. 12, 1-273
Time of Day NCOS Vol. 15, 1-313
Time of Day Routing Vol. 15, 1-324
Trouble Key on IBN Console Vol. 12, 1-276
Trunk Busy Verify Tone Vol. 12, 1-282
TVDS - II Vol. 15, 1-334
Two-Way Splitting Vol. 12, 1-292
UCD Night Service Invocation Enhancements Vol. 12, 1-295
UCD on EBS and UCD SD Point Vol. 15, 1-341
UCD Queue Status Lamp Vol. 12, 1-302
Uniform Call Distribution (to 500/2500 Telephone Sets) Vol. 12, 1-311
Uniform Call Distribution from Queue Vol. 12, 1-325
Variable Length/Same Leading Digit(s) Translation Vol. 12, 1-330
Variable Stutter Dial Tone Vol. 13, 1-386
Variable Types of Outpulsing on Same Call Vol. 12, 1-350
VFG INWATS Ovfl Totals to AMA Tape - IBN Vol. 13, 1-393
VFG Look Ahead Vol. 13, 1-398
VFG Usage Data Vol. 13, 1-404
Virtual Access to Private Networks Vol. 14, 1-82
VMX Interface Vol. 15, 1-361
Wild Card Key Vol. 12, 1-354
TCAPTRID, table
datafilling Vol. 13, 4-95
TERMDEV, table
datafilling Vol. 16, 2-47
TIMEODAY, table
datafilling Vol. 15, 1-318, Vol. 15, 1-329
TMTCNTL subtable TREAT, table
datafilling Vol. 12, 3-290
TMTCNTL.TREAT, table
datafilling Vol. 11, 2-210
TMTMAP, table
datafilling Vol. 11, 2-212
TODHEAD, table
datafilling Vol. 15, 1-317, Vol. 15, 1-328
translating
2-Way Digital FX Trunk - Business Services Vol. 11, 2-2
3-Way Conference/Transfer Vol. 11, 2-7

3WC Dial 0 for 608 Cord Board
Vol. 11, 2-16
3WC/Call Transfer for UCD Vol. 11, 2-22
3WC/CXR to 2500 Set Call Waiting Interactions Vol. 11, 2-30, Vol. 11, 2-404
6 Port Conference Use Control Vol. 11, 2-34
A/C Activate/Deactivate of CFU/CFI
Vol. 12, 3-2
AC to IBNISUP Interworking Vol. 12, 3-11
Access Feature Grouping Vol. 15, 4-2
Access to CCSA Vol. 11, 2-43
Access to CO from PBX Vol. 11, 2-50
Access to ETN Vol. 11, 2-57
Access to Special Service Facilities
Vol. 11, 2-64
Account Codes Vol. 12, 3-15
ACD - Mgmt Rep 2 Way Data Stream
Vol. 16, 2-62
ACD Access Feature Grouping Vol. 16, 2-2
ACD CompuCALL Vol. 16, 3-2
ACD Interaction with IVR Vol. 16, 2-29
ACD Night Service Call Queue Clearing
Vol. 16, 2-79
ACD Nodal Treatment in NACD Vol. 16, 4-2
ACD on 2500 Set Vol. 16, 2-86
ACD Remote Load Management I
Vol. 16, 2-106
ACD Supergroup Vol. 16, 4-8
ACD-Load Management III Vol. 16, 2-34
AC-Extended Calls to CFB/CFD
Vol. 11, 2-39
AF1565 change speed call controller
Vol. 12, 3-265
ANI Information in SMDR Output
Vol. 12, 3-24
Attendant - Auto Dial Vol. 11, 2-66
Attendant Call Detail Entry Vol. 12, 3-37
Attendant Call Park Recall Timer
Vol. 11, 2-72
Attendant Call Selection Vol. 11, 2-77
Attendant Camp-On Vol. 11, 2-80
Attendant Conference (Maximum Six Conferees) Vol. 11, 2-89
Attendant Console Call Hold Recall
Vol. 11, 2-100
Attendant Console Display Vol. 11, 2-105
Attendant Console End to End Signalling
Vol. 11, 2-114
Attendant Console OM on an Individual Console Basis Vol. 12, 2-2
Attendant Control of Trunk Group Access
Vol. 11, 2-122
Attendant Control of VFG Vol. 12, 3-48
Attendant Display of Queued Calls by ICI Key Vol. 11, 2-127
Attendant Locked Loop Operation
Vol. 11, 2-136
Attendant Mesage Waiting Vol. 12, 3-57
Attendant Release Upon Completion of Dialing Vol. 11, 2-140
Attendant Set Up Conference
10 or More Conferees Vol. 12, 3-70
Attendant Speed Calling Vol. 11, 2-144
Attendant to Recorded Announcement
Vol. 11, 2-152
Attendant to UCD Vol. 11, 2-154
Attendant Transfer Vol. 11, 2-166
Audio Input on Incoming Calls in Queue
Vol. 11, 2-169
Audio Interlude Vol. 11, 2-179
Audio Table Expansion Vol. 11, 2-192
Authcode for MDR Vol. 14, 4-12
Authorization Codes Vol. 12, 3-81
Automatic Intercept System (AIS) Enhancement Vol. 11, 2-196
Automatic Line Vol. 11, 2-216
Automatic Line and MADN Vol. 14, 2-2
Automatic Recall Vol. 11, 2-219
Automatic Routing System - (Basic)
Vol. 12, 3-85
Base ACD Vol. 16, 2-114
Bellcore AMA Enhanced Automatic Route Selection Translations Vol. 14, 4-17
Blind Transfer Recall Vol. 11, 2-231
Block Calling Name/Number Delivery Blocking per Call Vol. 15, 7-2
BOC AMA Call Code 032 Vol. 14, 4-30
Business Set Busy Indicator Vol. 14, 2-8
Business Set Call Waiting Originate
Vol. 14, 2-17
Business Set Dial Call Waiting Vol. 14, 2-25
Busy Verification - Stations Vol. 11, 2-258
Busy Verification - Trunks Vol. 11, 2-269

Call Back Queuing (Basic) Vol. 12, 3-92
Call Forcing Tone Optionality Vol. 16, 2-209
Call Forward All Calls Vol. 11, 2-283
Call Forward Busy Vol. 11, 2-293
Call Forward Busy - Inhibit Make & Inhibit Line Busy Vol. 12, 3-100
Call Forward Busy/Don't Answer - Internal/External Vol. 12, 3-116
Call Forward Do Not Answer and Call Waiting Interaction Vol. 11, 2-321, Vol. 12, 3-136
Call Forward Don't Answer Vol. 11, 2-304
Call Forward Indication Vol. 15, 9-2
Call Forward Prevention Enhancements Vol. 12, 3-149
Call Forward Timed Vol. 12, 3-178
Call Forward/Automatic Dial Display Vol. 14, 2-38
Call Forwarding of Call Waiting Calls Vol. 12, 3-191
Call Hold Vol. 11, 2-334
Call Park Vol. 11, 2-348
Call Park Recall Identification Vol. 14, 3-2
Call Pickup Vol. 11, 2-364
Call Pickup Transparency Vol. 11, 2-373
Call Request Call Processing Enhancements Vol. 11, 2-375, Vol. 12, 3-200
Call Request Retrieve/Key Short Hunt Interaction Control Vol. 12, 3-203
Call Transfer Enhancement Vol. 11, 2-378
Call Waiting Vol. 11, 2-391
Call Waiting - Originating Vol. 11, 2-411
Call waiting 1A transparency issues Vol. 12, 3-208
Calling Name Delivery on MADN (CNAMD on MADN) Vol. 13, 2-2
Calling Name Inspect Key Vol. 15, 2-2
Calling Name/Number Delivery Blocking (CNNB) Vol. 15, 7-20
Calling Number and NCOS Display on Attendant Console Vol. 13, 4-2
Camp On with Music Vol. 11, 2-422
CCSA Line Option Vol. 14, 4-34
CFBL Inhibit Line Busy/Inhibit MB Enhancements Vol. 12, 3-215
CFD from Hunt Group Station Vol. 11, 2-432
CFD Interaction with Three-Way Calling Vol. 11, 2-440
CFGDA for Hunt Groups Vol. 11, 2-445
CFW for MADN Secondary Members Vol. 14, 3-17
Change EBS Features During Talking State Vol. 12, 3-230
Change Line Class Codes via SERVORD Vol. 12, 3-239
Class of Service Restrictions Vol. 11, 2-455
CLASS on MBS/MADN Base Vol. 13, 2-9
Class on MVP Base Vol. 13, 2-66
CLEN for EBS Vol. 12, 3-272
Code Call Access Vol. 11, 2-461
Code Calling - Line Termination Vol. 11, 2-467
Code Restriction Vol. 11, 2-477
CompuCALLEnhancements-Screen-Assisted Telephony Vol. 16, 3-121
CompuCALL Integration with ICCM Vol. 16, 7-2
CompuCALL Transport Enhancements Vol. 16, 5-12
Conference Join Vol. 11, 2-484
Control of Multiple Call Forwarding Vol. 12, 3-282
COT Enhancement Vol. 13, 2-76
CPU Datafill Enhancements Vol. 11, 2-493
Customer Administration of Data Vol. 14, 4-38
Customer Dialed Account Recording (CDAR) Vol. 14, 4-56
Customer Group Transparency Vol. 11, 2-500
Customer Network Data Changes Vol. 14, 4-68
Customer Service Change Via SERVORD Vol. 14, 4-87, Vol. 14, 4-93
Cut Through Dialing Vol. 12, 3-296
Cut Thru and Thru Dialing Interaction Vol. 12, 3-303
Cut Thru Dialing for IBN Lines & A/C Vol. 12, 3-309
Denied Incoming Vol. 11, 2-505
Dial - Call Waiting Vol. 11, 2-517
Dialtone Passback via PX Trunks for MDC Vol. 12, 3-316
Dictation Access and Control (DTMF Only) Vol. 11, 2-529

Direct Inward Dialing (DID) Vol. 14, 4-107
Direct Inward System Access (DISA) Vol. 12, 3-327
Direct Outward Dialing (DOD) Vol. 11, 2-536
Direct Station Selection/Busy Lamp Field for MBS Vol. 15, 3-2
Directed Call Park Vol. 11, 2-541
Directed Call Pickup - Barge In Vol. 11, 2-553
Directed Call Pickup - Non Barge In Vol. 11, 2-563
DISA
Invalid Authcode Treatment Option Vol. 12, 3-338
DISA - Remove Auth Code Timeout Vol. 12, 3-344
DISA Enhancements Vol. 12, 3-332
DISA Third Dial Tone Vol. 12, 3-348
Display Called About Number Vol. 16, 2-221
Distinctive and Ring Again Ringing Vol. 11, 2-571
Distinctive Call Waiting Ringback Vol. 12, 3-355
distinctive call waiting tones Vol. 11, 2-576
Distinctive Ringing Vol. 11, 2-582
Distinctive Ringing Enhancements Vol. 11, 2-588
Do Not Disturb Vol. 12, 2-21
Dt After CFW Cancel and Spd Call Programming Vol. 12, 3-369
DTMF Outpulsing on a Line Vol. 11, 2-606
E911 Single Button Transfer Operation Vol. 15, 3-21
EAEO - IBN PIC Using SERVORD Vol. 12, 3-374
EBS as a Message Center - Enhancements Vol. 14, 2-47
EBS Call Forwarding on a per Key Basis Vol. 14, 3-26
End-to-End Signalling via Speed Call Vol. 11, 2-618
Enhanced Handling of ACD Re-Enqueued Calls Vol. 16, 2-238
Enhanced MADN Call Control Vol. 14, 3-54
Enhanced SERVORD II Vol. 12, 3-385
ERWT for Lines, Trunks for ARS, Call Back Queue Features Vol. 12, 3-396
ESN - Answer Supervision Generation Vol. 12, 3-403
ESN - Authorization Codes Vol. 12, 3-409
ESN - Call-Back Queuing Vol. 12, 3-420
ESN - Network Class of Service Vol. 15, 1-24
ESN - Network Information Signals Vol. 15, 1-29
ESN - Network Speed Call Vol. 15, 1-54
ESN - Off-hook Queuing Vol. 12, 3-431
ESN Detail Record Vol. 15, 1-2
ESN-Network Automatic Route Selection TEHO and HEHO Vol. 15, 1-7
Executive Message Service Enhancement - Multi EMW per DN Vol. 14, 2-91
Executive Right of Way Vol. 11, 2-628
Flexible Console Alerting Vol. 11, 2-638
Flexible Display Language Vol. 12, 2-34
Flexible Intercept Vol. 11, 2-648
Flexible Station Controlled Conference (500/2500 Sets) Vol. 12, 3-441
Forced Announcements for NACD Vol. 16, 4-29
Generalized Distinctive Ringing Vol. 11, 2-651
Group Intercom All Call Vol. 14, 3-90
Group Number Feature Control Vol. 13, 1-2
IBN - Optional Call Forward Links Vol. 13, 1-77
IBN & ESB Compatibility Vol. 13, 1-72
IBN Auth Codes for Alternate Route Selection (ARS) Vol. 13, 1-42
IBN Call Forward Validation Vol. 11, 2-658
IBN Cancel Call Waiting Vol. 11, 2-668
IBN Class 5 INWATS Vol. 13, 1-56
IBN Class 5 Psuedo OUTWATS Vol. 13, 1-63
IBN Feature Activation OMs I Vol. 11, 2-673
IBN ISUP NETINFO Translations Vol. 13, 3-2
IBN LCC Compatibility with FRO Line Option Vol. 11, 2-680
IBN Outpulsing to POTS Trunks Vol. 11, 2-700

IBN Quantity Control (100 Lines) Vol. 11, 2-705
IBN Trunks with ISUP Signalling Vol. 13, 1-80
IBNRTE Table Capacity Increase Vol. 11, 2-707
ICM Configuration Management Vol. 16, 9-30
ICM Message Waiting Activation/Deactivation Vol. 16, 9-46
ICM TAPI Extensions Vol. 16, 9-65
ICM Three-Way Call Enhanced Status Reporting Vol. 16, 9-80
ICM Variable Wrap Reporting Vol. 16, 9-96
ICM Workqueue Re-Engineering Vol. 16, 9-106
IDDD via ARS Vol. 15, 1-88
Immediate Answer Reporting for IBN Vol. 11, 2-714
Immediate Notification of Priority Enqueued Calls Vol. 12, 2-45
Increase Auth Codes per Customer Group Vol. 13, 1-108
Increase in Number of IBN Customer Groups Vol. 11, 2-717
Increase Number of Equivalent DN Appearances for IBN Vol. 11, 2-721
Individual Page from GIC Vol. 14, 3-101
Interactive Display Menu on MBS Sets Vol. 15, 3-44
Interposition Calls and Transfers Vol. 11, 2-726
INWATS to Direct Inward System Access Vol. 13, 1-112
ISUP Shared Trunking Enhancement Vol. 13, 3-25
Killer Trunk Report Separation Vol. 15, 1-133
last number redial (lnr) Vol. 12, 1-2
Last Number Redial from Set Vol. 14, 3-110
Lockout Vol. 12, 1-16
Loud Speaker & Radio Paging Access Vol. 12, 1-19
Loudspeaker Paging - Line Termination Vol. 12, 1-25
MACD Nodal Service Observing Vol. 16, 2-261
MACD PIN Configuration and Control Vol. 16, 2-276
madn and conference interaction Vol. 12, 1-32
MADN Bridging - 3 Way Call Vol. 14, 3-117
MADN Cut-off on Disconnect (COD) Vol. 14, 3-121
MADN Ring Forward Vol. 14, 3-136
MADN Service Orders Vol. 14, 2-111
Make Set Busy Except GIC Vol. 14, 3-148
MAP Alarm Level Screening Vol. 15, 1-145
MAP Display for Attendant OM Vol. 12, 1-37
MBG Alternate Terminating Number Billing Vol. 13, 3-45
MBG Enabling of Feature Networking Vol. 13, 3-51
MBG Feature Networking Control Vol. 13, 3-56
MBG II - Support of IBN7 Trunk Features Vol. 13, 3-63
MBG III - Support of Private Numbering Plan Vol. 13, 3-75
MBG IV - Support of Network EMW Vol. 13, 3-110
MBG Redirection Enhancements for ISUP IBN Trunks Vol. 13, 4-33
MBS 30-Port Conference Vol. 12, 1-40
MBS Auto Answer Back Vol. 14, 2-130
MBS Automatic Dial Vol. 14, 2-136
MBS Automatic Line Vol. 14, 2-143
MBS Busy Override Vol. 14, 2-148
MBS Call Back Queuing Vol. 14, 2-160
MBS Call Park Vol. 14, 2-189
MBS Call Pickup Feature Key S/W Vol. 14, 2-209
MBS Call Waiting Vol. 14, 2-218
MBS Display Called Number Vol. 14, 2-226
MBS Display Calling Number Vol. 14, 2-233
MBS End to End Signalling Vol. 14, 2-241
MBS Feature Code Access Vol. 14, 2-243
MBS Feature Display Vol. 14, 2-248
MBS Group Intercom Vol. 14, 2-257
MBS Held Calls Vol. 14, 2-265
MBS II Templates Vol. 14, 2-119
MBS Individual Business Line Vol. 14, 2-267

MBS Intercom Vol. 14, 2-280
MBS Listen on Hold Vol. 14, 2-287
MBS MADN SCA/MCA (across Switch) Vol. 14, 2-289
MBS Make Set Busy Vol. 14, 2-297
MBS Malicious Call Hold Vol. 14, 2-307
MBS Message Waiting Vol. 13, 1-123
MBS Onhook Dialing Vol. 14, 2-314
MBS Power Feature - Name Programming Vol. 15, 3-62
MBS Privacy Release (across Switch) Vol. 14, 2-316
MBS Query Time Key Vol. 14, 2-328
MBS Ring-Again Feature Key S/W Vol. 14, 2-333
MBS Speed Calling Feature Key S/W Vol. 14, 2-341
MBS Three-Way Calling Transfer Vol. 14, 2-355
MDC AFG Add Option Vol. 15, 4-71
MDC Circuit Test Enhancement Vol. 14, 2-361
MDC Copy Feature Set Vol. 15, 4-58
MDC CUSTENG Robustness Vol. 12, 1-51
MDC DSS/BLF Set Based Vol. 15, 5-2
MDC Enhanced WATS Vol. 15, 1-150
MDC MBS Interactive Display Vol. 15, 4-88
MDC Single Button Transfer Vol. 15, 3-75
MDC to 10-digit routing Vol. 15, 10-4
MDC to Universal routing Vol. 15, 11-5
MDC Variable CDAR Vol. 13, 1-129
MDR Data in the AMA Stream Vol. 15, 1-194
meet me conference Vol. 12, 1-56
meet me conference feature expansion Vol. 13, 1-149
Meet Me Page Vol. 13, 1-162
message service - list management Vol. 14, 2-392
message service-leave message Vol. 14, 2-376
Message Waiting Lamp Update - Link Phone Vol. 13, 1-176
Multi-location Business Group I Vol. 13, 3-120
Multipilot Directory Numbers on MLH Group Vol. 11, 2-244, Vol. 12, 2-29, Vol. 13, 1-50, Vol. 14, 2-177, Vol. 15, 1-216
Multiple Position Hunt with Queue Vol. 13, 1-182
Music on Hold for EBS Vol. 14, 3-160
MVP Dial Plan Vol. 12, 1-68
Name Display for MADN Members Vol. 14, 3-179
NAS Features Optionality Vol. 13, 4-39
Network Access Registers (NARS) Vol. 15, 6-2
Network Attendant Control Vol. 13, 4-44
Network Attendant Recall Vol. 13, 4-48
Network Camp-On II Vol. 13, 4-52
Network Dial Plan Display Vol. 13, 4-56
Network Display Enhancement Vol. 13, 4-73
Network Feature Access Restriction Vol. 15, 8-2
Network Intelligent Call Management Vol. 16, 7-26
Network Message Waiting Indicator (MWI) Vol. 13, 4-83
Network Name Display Vol. 13, 4-103
Network Name Display for Attendant Consoles Vol. 13, 4-115
Network Wide Ring Again Vol. 13, 4-140
Networked ACD on CCS7 Vol. 16, 4-42
Networked ACD on PRA Vol. 16, 4-57
Networked EBS Display Vol. 13, 4-169
Night Service - Flexible Vol. 12, 1-78
Night Service Trunk Answer from Any Station - Fixed Vol. 12, 1-86
Night Service Trunk Answer From Any Station-TAFAS Vol. 12, 1-93
Non-Data Link Console Call Extension Vol. 13, 1-210
Off-hook Queuing Vol. 13, 1-219
OHQ, CBQ for OUTWATS VFG Vol. 13, 1-228
Optional Answer Supervision from Attendant Queue Vol. 12, 1-101
Originating/Terminating Line Select (TLS) Vol. 14, 3-194
Outgoing Restriction Control Vol. 15, 1-225
Override ACR for CFU Vol. 12, 1-107

Patch Source Inclusion I Vol. 12, 1-115
Patch Source Inclusion II Vol. 12, 1-125
Peg Counts on LDNs on Attendant Consoles Vol. 12, 2-49
Pending Order File (POF) Enhancements Vol. 15, 1-246
permanent hold (500/2500 sets) Vol. 12, 1-134
Personal Call Screening of Call Forwarding Vol. 13, 1-236
PF Robustness - Call Forwarding per Key (CFK) Vol. 15, 4-101
PF Robustness - Call Pickup Separate Keys Compatibility Vol. 15, 4-118
PF Robustness - Enforced Password Vol. 15, 4-143
Position Busy Vol. 12, 1-148
Power Feature Audit Trails Vol. 15, 3-84
Power Features Enhancements I Vol. 15, 3-95
Power Features Installer Application Vol. 15, 3-131
Preset Conference Vol. 13, 1-245
Preset Conference (Large) Vol. 15, 1-256
Query Functional Station Grouping Vol. 12, 1-152
Queueing OMs per Route Vol. 13, 1-261
Remove Timeout between Authcode/Secondary Dial Tone Vol. 13, 1-276
Repeated Alert for MBS Vol. 14, 3-205
ring again Vol. 12, 1-158
Ring Again Cancellation Timer Vol. 12, 1-167
ring again on hung groups Vol. 12, 1-175
ring reminder off/on option per line Vol. 13, 1-304
RLT with No Third Party Interaction Vol. 14, 1-2
Second and Third Delay Announcements Vol. 12, 1-182
Secrecy Vol. 12, 1-193
Semi-restricted Incoming Lines Call Intercept Vol. 12, 1-196
Separate SMDR Files by Cust Group Vol. 13, 1-309
Series completion Vol. 15, 1-273
Series completion enhancements Vol. 15, 1-282
Service Analysis for IBN Vol. 15, 1-287
SERVORD cleanup for MBS Vol. 14, 2-403
Setting Attendant Recall Timers to Zero Vol. 12, 1-207
Short Hunt on MBS Vol. 14, 2-415
Simplified Dialing Vol. 12, 1-211
SLE on MBS/MADN Vol. 13, 2-88
SMDR Derived from Bellcore AMA Record Vol. 15, 1-293
SMDR for ONI Lines Vol. 13, 1-319
Special Intercept Through Service Orders Vol. 12, 1-235
Specific Key Ringback on Ring Again Request on EBS Vol. 14, 3-212
speed calling group - long list Vol. 12, 1-240
speed calling individual - short list Vol. 12, 1-245
Station Activated DND with Feature Active Reminder Vol. 12, 1-255
station activation of cfb/cfd Vol. 13, 1-325
Station Camp On for Meridian Business Set Vol. 15, 2-33
Station Message Detail Recording Vol. 13, 1-337
Station Message Waiting Vol. 13, 1-345
station specific auth codes Vol. 13, 1-355
station specific authcode-cdc enhancements Vol. 13, 1-364
Storing of 24 Dialed Digits Vol. 12, 1-264
Stuttered Dial Tone for Message Waiting Vol. 13, 1-372
Supervisory Console (Basic) Vol. 13, 1-378
Suspend and Restore Remote Call Forward Lines Vol. 13, 1-381
Teen Service on MDC Vol. 13, 2-125
Terminating Billing Option Vol. 15, 1-297
TGB/TAC Access thru Special Keys Vol. 12, 1-267
Through Dialing Vol. 12, 1-273
Time of Day NCOS Vol. 15, 1-312
Time of Day Routing Vol. 15, 1-324
Trouble Key on IBN Console Vol. 12, 1-275
Trunk Busy Verify Tone Vol. 12, 1-282
TVDS - II Vol. 15, 1-333

Two Way Splitting Vol. 12, 1-292
UCD Night Service Invocation Enhancements Vol. 12, 1-294
UCD on EBS and UCD SD Point Vol. 15, 1-340
UCD Queue Status Lamp Vol. 12, 1-301
uniform call distribution (to 500/2500 telephone sets) Vol. 12, 1-310
Uniform Call Distribution from Queue Vol. 12, 1-324
Variable Length/Same Leading Digit(s) Translation Vol. 12, 1-329
Variable Speed Call Access Code Vol. 12, 1-335
Variable Stutter Dial Tone Vol. 13, 1-385
Variable Types of Outpulsing on Same Call Vol. 12, 1-350
VFG INWATS Ovfl Totals to AMA Tape Vol. 13, 1-388
VFG Look Ahead Vol. 13, 1-397
VFG Usage Data Vol. 13, 1-404
Virtual Access to Private Networks Vol. 14, 1-39
VMX Interface Vol. 15, 1-360
Wild Card Key Vol. 12, 1-354
translations
CCS7 Vol. 16, 12-9
TRBLCODE, table
datafilling Vol. 12, 1-280
TRKGRP (outgoing), table
datafilling Vol. 15, 1-37
TRKGRP, table
datafilling Vol. 11, 2-5, Vol. 11, 2-47, Vol. 11, 2-52, Vol. 11, 2-62, Vol. 11, 2-204, Vol. 11, 2-511, Vol. 12, 3-324, Vol. 13, 1-98, Vol. 13, 3-16, Vol. 14, 1-92, Vol. 14, 2-273, Vol. 14, 4-25, Vol. 14, 4-31, Vol. 15, 1-12, Vol. 15, 1-213
routing Vol. 16, 11-8, Vol. 16, 12-8, Vol. 16, 13-12
TRKMEM, table
datafilling Vol. 11, 2-55, Vol. 11, 2-207, Vol. 13, 1-104
routing Vol. 16, 11-8, Vol. 16, 12-9, Vol. 16, 13-13
TRKSGRP, table
datafilling Vol. 11, 2-53, Vol. 11, 2-206, Vol. 12, 3-325, Vol. 13, 1-102, Vol. 13, 3-18, Vol. 14, 1-93
routing Vol. 16, 11-8, Vol. 16, 12-9, Vol. 16, 13-12
TVDSTRKS, table
datafilling Vol. 15, 1-338

U

UCDGRP, table
datafilling Vol. 11, 2-159, Vol. 11, 2-189, Vol. 12, 1-297, Vol. 12, 1-305, Vol. 12, 1-316, Vol. 14, 2-93, Vol. 15, 1-306, Vol. 15, 1-350, Vol. 15, 6-34
understanding
MDC to 10-digit routing Vol. 15, 10-1
MDC to Universal routing Vol. 15, 11-1

V

VARACCT, table
datafilling Vol. 13, 1-147
VFGDATA, table
datafilling Vol. 12, 3-380, Vol. 14, 4-50
VFGENG, table
datafilling Vol. 14, 4-51
VIRTGRPS, table
datafilling Vol. 11, 2-512, Vol. 12, 3-321, Vol. 12, 3-378, Vol. 13, 1-58, Vol. 13, 1-67, Vol. 13, 1-117, Vol. 14, 4-24, Vol. 15, 1-4, Vol. 15, 1-158, Vol. 15, 1-305
VMXTAB, table
datafilling Vol. 15, 1-368
VRTGRPS, table
datafilling Vol. 13, 1-230

W

WATSAUTH, table
datafilling Vol. 15, 1-167
WATSBAND, table
datafilling Vol. 15, 1-160
WCKCODES, table
datafilling Vol. 11, 2-97, Vol. 11, 2-120, Vol. 11, 2-133, Vol. 11, 2-150, Vol. 11, 2-267, Vol. 11, 2-279, Vol. 11, 2-645, Vol. 12, 1-83, Vol. 12, 1-270, Vol. 12, 1-279, Vol. 12, 1-290,

Vol. 12, 1-356, Vol. 12, 2-41, Vol. 12, 3-8,
Vol. 12, 3-46, Vol. 12, 3-55, Vol. 12, 3-78,
Vol. 12, 3-83

X

XESAINV, table
datafilling Vol. 14, 2-104
XLANAME, table
contents Vol. 16, 11-3, Vol. 16, 12-3,
Vol. 16, 13-4
datafilling Vol. 12, 1-72, Vol. 12, 1-331,
Vol. 13, 1-138, Vol. 14, 3-46, Vol. 15, 1-10,
Vol. 15, 1-56, Vol. 15, 1-336, Vol. 15, 6-24,
Vol. 15, 10-9, Vol. 15, 11-10

Z

ZONEORDR, table
datafilling Vol. 13, 1-70, Vol. 13, 1-233

DMS-100 Family

North American DMS-100

Translations Guide Volume 14 of 20

Meridian Digital Centrex (MDC) Part 4 of 6

Product Documentation - Dept. 3423
Nortel Networks
P.O. Box 13010
RTP, NC 27709-3010
Telephone: 1-877-662-5669
email: cits@nortelnetworks.com

Copyright © 1996-2001 Nortel Networks,
All Rights Reserved

NORTEL NETWORKS CONFIDENTIAL: The information contained herein is the property of Nortel Networks and is strictly confidential. Except as expressly authorized in writing by Nortel Networks, the holder shall keep all information contained herein confidential, shall disclose the information only to its employees with a need to know, and shall protect the information, in whole or in part, from disclosure and dissemination to third parties with the same degree of care it uses to protect its own confidential information, but with no less than reasonable care. Except as expressly authorized in writing by Nortel Networks, the holder is granted no rights to use the information contained herein.

Information is subject to change without notice. Nortel Networks reserves the right to make changes in design or components as progress in engineering and manufacturing may warrant. Changes or modification to the DMS-100 without the express consent of Nortel Networks may void its warranty and void the user's authority to operate the equipment.

Nortel Networks, the Nortel Networks logo, the Globemark, How the World Shares Ideas, Unified Networks, DMS, DMS-100, Helmsman, MAP, Meridian, Nortel, Northern Telecom, NT, and SuperNode are trademarks of Nortel Networks.

Publication number: 297-8001-350
Product release: LEC0015 and up
Document release: Standard 14.02
Date: May 2001
Printed in the United States of America

NORTEL NETWORKS™