Critical Release Notice

Publication number: 297-8021-547
Publication release: Standard 17.04

The content of this customer NTP supports the SN07 (DMS) software release.

Bookmarks used in this NTP highlight the changes between the NA015 baseline and the current release. The bookmarks provided are color-coded to identify release-specific content changes. NTP volumes that do not contain bookmarks indicate that the NA015 baseline remains unchanged and is valid for the current release.

Bookmark Color Legend

Black: Applies to content for the NA015 baseline that is valid through the current release.

Red: Applies to new or modified content for NA017 that is valid through the current release.

Blue: Applies to new or modified content for NA018 (SN05 DMS) that is valid through the current release.

Green: Applies to new or modified content for SN06 (DMS) that is valid through the current release.

Purple: Applies to new or modified content for SN07 (DMS) that is valid through the current release.

Attention!
Adobe® Acrobat® Reader™ 5.0 or higher is required to view bookmarks in color.

Publication History

September 2004

Standard release 17.04 for software release SN07 (DMS). This release is current for the SN07 (DMS) software release, although no changes have been made for SN07 (DMS) features.

Volume 2

Modified procedure - Bus interface cards in an LCD
Modified procedure - NTBX71 in an LCME
Modified procedure - NT9X30 in an LPP LIS

Volume 3

Modified procedure - NT2X70 in an XPM

Volumes 5

All of the changes below are due to CR Q00855532:

Modified procedure - NT6X40 in an SMA
Modified procedure - NT6X40 in an SMA-MVI-20
Modified procedure - NT6X40 in an SMA2
Modified procedure - NT6X40 in an SMS
Modified procedure - NT6X40 in an SMU

March 2004

Standard release 17.03 for software release SN06 (DMS). Updates made for this release are shown below:

Volume 1

Modified card replacement procedure: Power converter cards in a SuperNode SE 16k ENET - Card NT9X30AB is Manufacture Discontinued and is replaced by new card NT9X30AC (Note - there is a bookmark for each changed reference).

Volume 2

No changes

Volume 3

Modified card replacement procedure: Power converter cards in trunk and service modules.

Volumes 4 - 7

No changes

September 2003

Standard release 17.02 for software release SN06 (DMS). Updates made for this release are shown below:

Volume 1

Modified card replacement procedure: Power converter cards in a Supernode SE CM/SLM.

Volume 2

Modified card replacement procedure: NT6X30 in LCE-type frames.

Volumes 3 - 7

No changes

June 2003

Preliminary release 17.01 for software release SN06 (DMS). Updates for this release are shown below:

Volume 1

No changes

Volume 2

No changes

Volume 3

Added new card replacement procedure: SPM NTLX99BA STM-1 for DMS Spectrum Peripheral Module.

Volumes 4 - 7

No changes

This page is intentionally blank

297-8021-547

DMS-100 Family

North American DMS-100

Card Replacement Procedures

Volume 1 of 7

LET0015 and up Standard 14.02 May 2001

NORTEL NETWORKS™

DMS-100 Family

North American DMS-100

Card Replacement Procedures

Volume 1 of 7

Publication number: 297-8021-547
Product release: LET0015 and up
Document release: Standard 14.02
Date: May 2001

Copyright © 1996-2001 Nortel Networks,
All Rights Reserved

Printed in the United States of America

NORTEL NETWORKS CONFIDENTIAL: The information contained herein is the property of Nortel Networks and is strictly confidential. Except as expressly authorized in writing by Nortel Networks, the holder shall keep all information contained herein confidential, shall disclose the information only to its employees with a need to know, and shall protect the information, in whole or in part, from disclosure and dissemination to third parties with the same degree of care it uses to protect its own confidential information, but with no less than reasonable care. Except as expressly authorized in writing by Nortel Networks, the holder is granted no rights to use the information contained herein.

Information is subject to change without notice. Nortel Networks reserves the right to make changes in design or components as progress in engineering and manufacturing may warrant. Changes or modification to the DMS-100 without the express consent of Nortel Networks may void its warranty and void the user's authority to operate the equipment.

Nortel Networks, the Nortel Networks logo, the Globemark, How the World Shares Ideas, Unified Networks, DMS, DMS-100, Helmsman, MAP, Meridian, Nortel, Northern Telecom, NT, and SuperNode are trademarks of Nortel Networks.

Contents

Card Replacement Procedures
Volume 1 of 7

NTP Summary Contents **vii**

About this document **xxvii**

How to check the version and issue of this document xxvii
References in this document xxvii
What precautionary messages mean xxviii
How commands, parameters, and responses are represented xxix
Input prompt (>) xxix
Commands and fixed parameters xxix
Variables xxix
Responses xxix

1 Breaker interface panel card replacement procedures **1-1**

Introduction 1-1
Application 1-1
Common procedures 1-1
Action 1-1
Recording card replacement activities 1-2
Circuit breaker in a BIP 1-3
NTNY24 in a BIP 1-7
NTNY25 in a BIP 1-11

2 SuperNode computing module card replacement procedures **2-1**

Introduction 2-1
Application 2-1
Common procedures 2-1
Action 2-2
Recording card replacement activities 2-2
SuperNode CM shelf layouts 2-3
NT9X20 in a SuperNode CM 2-5
System cards in a SuperNode CM 2-22

3 SuperNode SE computing module and system load module card replacement procedures 3-1

Introduction 3-1
Application 3-1
Common procedures 3-1
Action 3-2
Recording card replacement activities 3-2
SuperNode SE CM/SLM shelf layouts 3-3
NT9X44 in a SuperNode SE CM/SLM 3-5
NT9X46 in a SuperNode SE CM/SLM 3-27
NT9X62 in a SuperNode SE CM/SLM 3-45
Power converter cards in a SuperNode SE CM/SLM 3-67
Replace system cards in a SuperNode SE CM/SLM 3-85

4 Digital carrier module card replacement procedures 4-1

Introduction 4-1
Application 4-1
Common procedures 4-1
Action 4-1
Recording card replacement activities 4-2
DCM shelf layouts 4-3
Control complex cards in a digital carrier module 4-8
NT2X35 in a digital carrier module 4-13
NT2X36 in a digital carrier module 4-27
NT3X65 in a digital echo suppressor 4-37
Power converter cards in a digital carrier module 4-47

5 Enhanced link peripheral processor card replacement procedures 5-1

Introduction 5-1
Application 5-1
Common procedures 5-1
Action 5-1
Recording card replacement activities 5-2
ELPP shelf layouts 5-3
Common fill paddle boards in an ELPP LIS 5-9
HLIU cards in an ELPP LIS 5-17
HSLR cards in an ELPP LIS 5-27
NT9X13 in an ELPP LIM unit 5-36
System and power cards in an ELPP LIM unit 5-48

6 SuperNode SE enhanced network card replacement procedures 6-1

Introduction 6-1
Application 6-1
Common procedures 6-1
Action 6-2
Recording card replacement activities 6-2
SuperNode SE ENET shelf designs 6-3

Crosspoint and interface cards in a SuperNode SE 16k ENET 6-7
Crosspoint and interface cards in a SuperNode SE 32k ENET 6-31
Power converter cards in a SuperNode SE 16k ENET 6-53
System cards in a SuperNode SE 16k ENET 6-77
System cards in a SuperNode SE 32k ENET 6-100

7 File processor card replacement procedures 7-1

Introduction 7-1
Application 7-1
Common procedures 7-1
Action 7-1
Recording card replacement activities 7-2
SuperNode Multicomputing Base shelf layouts 7-3
NT9X89 in a storage device shelf in a file processor 7-6
NT9X90 in a storage device shelf in a file processor 7-18
NT9X91 in a storage device shelf in a file processor 7-33
System cards in a file processor 7-43

8 Frame supervisory panel and modular supervisory panel card replacement procedures 8-1

Introduction 8-1
Application 8-1
Common procedures 8-1
Action 8-1
Recording card replacement activities 8-2
FSP cards in a 42-in. (106.7-cm) SuperNode cabinet 8-3
NT0X36 in a cabinetized input/output equipment frame 8-8
NT0X36 in a cabinetized trunk module equipment frame 8-29
NT0X36 in an input/output equipment frame 8-53
NT0X36 in an international cabinet auxiliary module 8-74
NT0X91 in a CPCE frame 8-98
NT0X91 in a digital carrier equipment frame 8-112
NT0X91 in a line module equipment frame 8-123
NT0X91 in an MS6E 8-133
NT0X91 in an MS7E, ST7E, or ST6E 8-147
NT0X91 in a network equipment frame 8-159
NT0X91 in a trunk module equipment frame 8-172
NT6X36 in LCE-type frames and CLCE 8-192
NTRX41 in MSP in streamline B cabinets 8-197

9 Input/output device card replacement procedures 9-1

Introduction 9-1
Application 9-1
Common procedures 9-1
Action 9-1
Recording card replacement activities 9-2
IOD shelf layouts 9-3
Disk drive and magnetic tape controller cards in an IOC 9-10
NT1X67 in an IOC 9-21
NT1X78 in an IOE DDU shelf 9-28

NT1X89 in an IOC shelf 9-37
NT2X70 in an IOC 9-44
NTFX30 in an ISM 9-61
NTFX31 in an ISM 9-77
NTFX32AA in an ISM 9-92
System cards in an IOC 9-97

NTP Summary Contents

Card Replacement Procedures
Volume 1 of 7

About this document **Vol. 1, xxvii**

How to check the version and issue of this document Vol. 1, xxvii
References in this document Vol. 1, xxvii
What precautionary messages mean Vol. 1, xxviii
How commands, parameters, and responses are represented Vol. 1, xxix
Input prompt (>) Vol. 1, xxix
Commands and fixed parameters Vol. 1, xxix
Variables Vol. 1, xxix
Responses Vol. 1, xxix

1 Breaker interface panel card replacement procedures **Vol. 1, 1-1**

Introduction Vol. 1, 1-1
Application Vol. 1, 1-1
Common procedures Vol. 1, 1-1
Action Vol. 1, 1-1
Recording card replacement activities Vol. 1, 1-2
Circuit breaker in a BIP Vol. 1, 1-3
NTNY24 in a BIP Vol. 1, 1-7
NTNY25 in a BIP Vol. 1, 1-11

2 SuperNode computing module card replacement procedures **Vol. 1, 2-1**

Introduction Vol. 1, 2-1
Application Vol. 1, 2-1
Common procedures Vol. 1, 2-1
Action Vol. 1, 2-2
Recording card replacement activities Vol. 1, 2-2
SuperNode CM shelf layouts Vol. 1, 2-3
NT9X20 in a SuperNode CM Vol. 1, 2-5
System cards in a SuperNode CM Vol. 1, 2-22

3 SuperNode SE computing module and system load module card replacement procedures Vol. 1, 3-1

Introduction Vol. 1, 3-1
Application Vol. 1, 3-1
Common procedures Vol. 1, 3-1
Action Vol. 1, 3-2
Recording card replacement activities Vol. 1, 3-2
SuperNode SE CM/SLM shelf layouts Vol. 1, 3-3
NT9X44 in a SuperNode SE CM/SLM Vol. 1, 3-5
NT9X46 in a SuperNode SE CM/SLM Vol. 1, 3-27
NT9X62 in a SuperNode SE CM/SLM Vol. 1, 3-45
Power converter cards in a SuperNode SE CM/SLM Vol. 1, 3-67
Replace system cards in a SuperNode SE CM/SLM Vol. 1, 3-85

4 Digital carrier module card replacement procedures Vol. 1, 4-1

Introduction Vol. 1, 4-1
Application Vol. 1, 4-1
Common procedures Vol. 1, 4-1
Action Vol. 1, 4-1
Recording card replacement activities Vol. 1, 4-2
DCM shelf layouts Vol. 1, 4-3
Control complex cards in a digital carrier module Vol. 1, 4-8
NT2X35 in a digital carrier module Vol. 1, 4-13
NT2X36 in a digital carrier module Vol. 1, 4-27
NT3X65 in a digital echo suppressor Vol. 1, 4-37
Power converter cards in a digital carrier module Vol. 1, 4-47

5 Enhanced link peripheral processor card replacement procedures Vol. 1, 5-1

Introduction Vol. 1, 5-1
Application Vol. 1, 5-1
Common procedures Vol. 1, 5-1
Action Vol. 1, 5-1
Recording card replacement activities Vol. 1, 5-2
ELPP shelf layouts Vol. 1, 5-3
Common fill paddle boards in an ELPP LIS Vol. 1, 5-9
HLIU cards in an ELPP LIS Vol. 1, 5-17
HSLR cards in an ELPP LIS Vol. 1, 5-27
NT9X13 in an ELPP LIM unit Vol. 1, 5-36
System and power cards in an ELPP LIM unit Vol. 1, 5-48

6 SuperNode SE enhanced network card replacement procedures Vol. 1, 6-1

Introduction Vol. 1, 6-1
Application Vol. 1, 6-1
Common procedures Vol. 1, 6-1
Action Vol. 1, 6-2

Recording card replacement activities Vol. 1, 6-2
SuperNode SE ENET shelf designs Vol. 1, 6-3
Crosspoint and interface cards in a SuperNode SE 16k ENET Vol. 1, 6-7
Crosspoint and interface cards in a SuperNode SE 32k ENET Vol. 1, 6-31
Power converter cards in a SuperNode SE 16k ENET Vol. 1, 6-53
System cards in a SuperNode SE 16k ENET Vol. 1, 6-77
System cards in a SuperNode SE 32k ENET Vol. 1, 6-100

7 File processor card replacement procedures Vol. 1, 7-1

Introduction Vol. 1, 7-1
Application Vol. 1, 7-1
Common procedures Vol. 1, 7-1
Action Vol. 1, 7-1
Recording card replacement activities Vol. 1, 7-2
SuperNode Multicomputing Base shelf layouts Vol. 1, 7-3
NT9X89 in a storage device shelf in a file processor Vol. 1, 7-6
NT9X90 in a storage device shelf in a file processor Vol. 1, 7-18
NT9X91 in a storage device shelf in a file processor Vol. 1, 7-33
System cards in a file processor Vol. 1, 7-43

8 Frame supervisory panel and modular supervisory panel card replacement procedures Vol. 1, 8-1

Introduction Vol. 1, 8-1
Application Vol. 1, 8-1
Common procedures Vol. 1, 8-1
Action Vol. 1, 8-1
Recording card replacement activities Vol. 1, 8-2
FSP cards in a 42-in. (106.7-cm) SuperNode cabinet Vol. 1, 8-3
NT0X36 in a cabinetized input/output equipment frame Vol. 1, 8-8
NT0X36 in a cabinetized trunk module equipment frame Vol. 1, 8-29
NT0X36 in an input/output equipment frame Vol. 1, 8-53
NT0X36 in an international cabinet auxiliary module Vol. 1, 8-74
NT0X91 in a CPCE frame Vol. 1, 8-98
NT0X91 in a digital carrier equipment frame Vol. 1, 8-112
NT0X91 in a line module equipment frame Vol. 1, 8-123
NT0X91 in an MS6E Vol. 1, 8-133
NT0X91 in an MS7E, ST7E, or ST6E Vol. 1, 8-147
NT0X91 in a network equipment frame Vol. 1, 8-159
NT0X91 in a trunk module equipment frame Vol. 1, 8-172
NT6X36 in LCE-type frames and CLCE Vol. 1, 8-192
NTRX41 in MSP in streamline B cabinets Vol. 1, 8-197

9 Input/output device card replacement procedures Vol. 1, 9-1

Introduction Vol. 1, 9-1
Application Vol. 1, 9-1
Common procedures Vol. 1, 9-1
Action Vol. 1, 9-1

Recording card replacement activities Vol. 1, 9-2
IOD shelf layouts Vol. 1, 9-3
Disk drive and magnetic tape controller cards in an IOC Vol. 1, 9-10
NT1X67 in an IOC Vol. 1, 9-21
NT1X78 in an IOE DDU shelf Vol. 1, 9-28
NT1X89 in an IOC shelf Vol. 1, 9-37
NT2X70 in an IOC Vol. 1, 9-44
NTFX30 in an ISM Vol. 1, 9-61
NTFX31 in an ISM Vol. 1, 9-77
NTFX32AA in an ISM Vol. 1, 9-92
System cards in an IOC Vol. 1, 9-97

Card Replacement Procedures
Volume 2 of 7

1 Line concentrating module card replacement procedures Vol. 2, 1-1

Introduction Vol. 2, 1-1
Application Vol. 2, 1-1
Common procedures Vol. 2, 1-1
Action Vol. 2, 1-1
Recording card replacement activities Vol. 2, 1-2
LCM shelf layouts Vol. 2, 1-3
Bus interface cards in an LCD Vol. 2, 1-13
Control complex cards in LCM-type PMs Vol. 2, 1-31
Line cards in an LCE line drawer Vol. 2, 1-39
NT6X30 in LCE-type frames Vol. 2, 1-47
NTBX71 in an LCME Vol. 2, 1-62
Power cards in an LCE line drawer Vol. 2, 1-73
Power cards in LCM-type PMs Vol. 2, 1-79

2 Line module card replacement procedures Vol. 2, 2-1

Introduction Vol. 2, 2-1
Application Vol. 2, 2-1
Common procedures Vol. 2, 2-1
Action Vol. 2, 2-1
Recording card replacement activities Vol. 2, 2-2
LM shelf layouts Vol. 2, 2-3
Control complex cards in a line module controller Vol. 2, 2-9
Interface and power converter cards in an LM line drawer Vol. 2, 2-16
Line cards in an LM line drawer Vol. 2, 2-24
NT2X05 in a line module controller Vol. 2, 2-30
NT2X70 in a line module controller Vol. 2, 2-36

3 Link peripheral processor card replacement procedures Vol. 2, 3-1

Introduction Vol. 2, 3-1
Application Vol. 2, 3-1
Common procedures Vol. 2, 3-1
Action Vol. 2, 3-1
Recording card replacement activities Vol. 2, 3-2
LPP shelf layouts Vol. 2, 3-3
APU cards in an LPP LIS Vol. 2, 3-9
Common fill paddle boards in an LPP LIS Vol. 2, 3-36
EIU cards in an LPP LIS Vol. 2, 3-47
LIU7 cards in an LPP LIS Vol. 2, 3-57
FRIU cards in an LPP LIS Vol. 2, 3-68
NIU processor and controller cards in an LPP LIS Vol. 2, 3-82
NT9X13 in an LPP LIM unit Vol. 2, 3-89
NT9X30 in an LPP LIS Vol. 2, 3-100
NT9X74 in an LPP LIS Vol. 2, 3-126
NTDX16 in an LPP LIS Vol. 2, 3-140
NTEX28 in an NIU in an LPP LIS Vol. 2, 3-145
System and power cards in an LPP LIM unit Vol. 2, 3-155
VPU cards in an LPP LIS Vol. 2, 3-168
XLIU cards in an LPP LIS Vol. 2, 3-177

4 SuperNode SE LIS or ENI card replacement procedures Vol. 2, 4-1

Introduction Vol. 2, 4-1
Application Vol. 2, 4-1
Common procedures Vol. 2, 4-1
Action Vol. 2, 4-1
Recording card replacement activities Vol. 2, 4-2
SuperNode SE link interface shelf layouts Vol. 2, 4-3
Common fill cards in a SuperNode SE LIS or ENI shelf Vol. 2, 4-6
EIU cards in a SuperNode SE LIS Vol. 2, 4-13
FRIU cards in a SuperNode SE LIS Vol. 2, 4-24
LIU7 cards in a SuperNode SE LIS or ENI shelf Vol. 2, 4-38
NIU cards in a SuperNode SE LIS Vol. 2, 4-49
NT9X30 in a SuperNode SE LIS Vol. 2, 4-64
XLIU cards in a SuperNode SE LIS Vol. 2, 4-91

5 MTM card replacement procedures Vol. 2, 5-1

NT1X76 in an MTM Vol. 2, 5-2
NT3X67 in an MTM Vol. 2, 5-10

6 SuperNode message switch card replacement procedures Vol. 2, 6-1

Introduction Vol. 2, 6-1
Application Vol. 2, 6-1
Common procedures Vol. 2, 6-1
Action Vol. 2, 6-2

Recording card replacement activities Vol. 2, 6-2
SuperNode MS shelf layouts Vol. 2, 6-3
Interface cards in a SuperNode MS Vol. 2, 6-5
Manually busying LIM-to-MS SR128 links Vol. 2, 6-26
Returning LIM-to-MS SR128 links to service Vol. 2, 6-33
System cards in a SuperNode MS Vol. 2, 6-39

7 SuperNode SE message switch card replacement procedures Vol. 2, 7-1

Introduction Vol. 2, 7-1
Application Vol. 2, 7-1
Common procedures Vol. 2, 7-1
Action Vol. 2, 7-2
Recording card replacement activities Vol. 2, 7-2
SuperNode SE message switch shelf layouts Vol. 2, 7-3
Interface paddle boards in a SuperNode SE MS Vol. 2, 7-5
System cards in a SuperNode SE MS Vol. 2, 7-25

8 Message switch and buffer card replacement procedures Vol. 2, 8-1

Introduction Vol. 2, 8-1
Application Vol. 2, 8-1
Common procedures Vol. 2, 8-1
Action Vol. 2, 8-1
Recording card replacement activities Vol. 2, 8-2
MSB shelf layouts Vol. 2, 8-3
Control complex cards in an MSB Vol. 2, 8-12
NT2X70 in an MSB Vol. 2, 8-20
NT2X70 in an ST7G or STCM Vol. 2, 8-35
NT6X40 in an MSB Vol. 2, 8-48
NT6X68 in an MSB Vol. 2, 8-55
Processor and memory cards in an MSB Vol. 2, 8-62
Signaling terminal cards in an MSB Vol. 2, 8-70

9 SuperNode network card replacement procedures Vol. 2, 9-1

Introduction Vol. 2, 9-1
Application Vol. 2, 9-1
Common procedures Vol. 2, 9-1
Action Vol. 2, 9-2
Recording card replacement activities Vol. 2, 9-2
Network shelf layouts Vol. 2, 9-3
Crosspoint and interface cards in a 64k or 128k ENET Vol. 2, 9-15
Power converter cards in JNET shelves Vol. 2, 9-40
System cards in a 64k or 128k ENET Vol. 2, 9-49
System, interface, and crosspoint cards in JNET shelves Vol. 2, 9-72

10 Office alarm unit card replacement procedures Vol. 2, 10-1

Introduction Vol. 2, 10-1
Application Vol. 2, 10-1
Common procedures Vol. 2, 10-1
Action Vol. 2, 10-1
Recording card replacement activities Vol. 2, 10-2
OAU shelf layouts Vol. 2, 10-3
Control and circuit cards in the office alarm unit Vol. 2, 10-7
Power converter cards in the office alarm unit Vol. 2, 10-14

11 Remote line module card replacement procedures Vol. 2, 11-1

Introduction Vol. 2, 11-1
Application Vol. 2, 11-1
Common procedures Vol. 2, 11-1
Action Vol. 2, 11-1
Recording card replacement activities Vol. 2, 11-2
RLM shelf layouts Vol. 2, 11-3
Control complex cards in a remote line controller Vol. 2, 11-9
Line cards in an RLM line drawer Vol. 2, 11-16
NT2X05 in a remote line controller Vol. 2, 11-22
NT2X70 in a remote line controller Vol. 2, 11-28

Card Replacement Procedures Volume 3 of 7

1 Remote oscillator shelf card replacement procedures Vol. 3, 1-1

Introduction Vol. 3, 1-1
Application Vol. 3, 1-1
Common procedures Vol. 3, 1-1
Action Vol. 3, 1-1
Recording card replacement activities Vol. 3, 1-2
Remote oscillator shelf layouts Vol. 3, 1-3
NT1X78 in a remote oscillator shelf Vol. 3, 1-5
NT3X16 in a remote oscillator shelf Vol. 3, 1-14

2 Single shelf link peripheral processor card replacement procedures Vol. 3, 2-1

Introduction Vol. 3, 2-1
Application Vol. 3, 2-1
Common procedures Vol. 3, 2-1
Action Vol. 3, 2-1
Recording card replacement activities Vol. 3, 2-2
SSLPP shelf layouts Vol. 3, 2-3
Common fill cards in an SSLPP Vol. 3, 2-7

EIU cards in an SSLPP Vol. 3, 2-17
FRIU cards in an SSLPP Vol. 3, 2-29
LIU7 cards in an SSLPP Vol. 3, 2-44
NIU cards in an SSLPP Vol. 3, 2-57
Power converter cards in an SSLPP Vol. 3, 2-74
XLIU cards in an SSLPP Vol. 3, 2-105

3 SuperNode system load module card replacement procedures Vol. 3, 3-1

Introduction Vol. 3, 3-1
Application Vol. 3, 3-1
Common procedures Vol. 3, 3-1
Action Vol. 3, 3-2
Recording card replacement activities Vol. 3, 3-2
SuperNode SLM shelf layouts Vol. 3, 3-3
NT9X44 in a SuperNode SLM Vol. 3, 3-5
SPM NTLX60AA FIL with DSP RM DMS-Spectrum Peripheral Module Vol. 3, 3-26
SPM NTLX61AA SIM card DMS-Spectrum Peripheral Module Vol. 3, 3-37
SPM NTLX63AA CEM card DMS-Spectrum Peripheral Module Vol. 3, 3-45
SPM NTLX65BA DSP RM DMS-Spectrum Peripheral Module Vol. 3, 3-64
SPM NTLX71AA OC3 card DMS-Spectrum Peripheral Module Vol. 3, 3-78
SPM NTLX82AA CEM card DMS-Spectrum Peripheral Module Vol. 3, 3-99
SPM NTLX82BA CEM card DMS-Spectrum Peripheral Module Vol. 3, 3-118
System cards in a SuperNode SLM Vol. 3, 3-137

4 TOPS message switch card replacement procedures Vol. 3, 4-1

TMS shelf layouts Vol. 3, 4-2
NT2X70 in a TMS Vol. 3, 4-8
NT6X series in a TMS Vol. 3, 4-17
NT6X69 in a TMS Vol. 3, 4-19
NTBX01 in a TMS Vol. 3, 4-30
NTBX02 in a TMS Vol. 3, 4-37
NTMX77 in a TMS Vol. 3, 4-48

5 TOPS MP card replacement procedures Vol. 3, 5-1

NT2X70 in a TPC Vol. 3, 5-2
NTNX62 in a TPC Vol. 3, 5-7
NTNX63 in a TPC Vol. 3, 5-12
NTNX64 in a TPC Vol. 3, 5-17
NTNX65 in a TPC Vol. 3, 5-22
NTNX66 in a TPC Vol. 3, 5-27
NTNX68 in a TPC Vol. 3, 5-33
NTOM36 Keyboard Vol. 3, 5-40
NTOM90 in an MP Vol. 3, 5-45

NTOM92 in an MP Vol. 3, 5-52
Placing an MP position in service (integrated) Vol. 3, 5-57
Removing an MP position from service (integrated) Vol. 3, 5-62

6 Trunk module card replacement procedures Vol. 3, 6-1

Introduction Vol. 3, 6-1
Application Vol. 3, 6-1
Common procedures Vol. 3, 6-1
Action Vol. 3, 6-1
Recording card replacement activities Vol. 3, 6-2
TM shelf layouts Vol. 3, 6-3
Control complex cards in trunk and service modules Vol. 3, 6-27
Enhanced digital test unit or digital test unit cards in trunk and service modules Vol. 3, 6-37
Metallic test unit cards in trunk and service modules Vol. 3, 6-44
NT3X08AA in an MTM Vol. 3, 6-64
Power converter cards in trunk and service modules Vol. 3, 6-69
Single-card PMs in trunk and service modules Vol. 3, 6-84
Trunk, maintenance, and service cards in trunk and service modules Vol. 3, 6-93

7 Universal Edge 9000 card replacement procedures Vol. 3, 7-1

Introduction Vol. 3, 7-1
Application Vol. 3, 7-1
Common procedures Vol. 3, 7-1
Action Vol. 3, 7-1
Recording card replacement activities Vol. 3, 7-2
UEN shelf layout Vol. 3, 7-3
Control cards in a UEN shelf Vol. 3, 7-5
Line cards in a UEN shelf Vol. 3, 7-14
NTNP20 in a UEN shelf Vol. 3, 7-19

8 XPM card replacement procedures Vol. 3, 8-1

Introduction Vol. 3, 8-1
Application Vol. 3, 8-1
Common procedures Vol. 3, 8-1
Action Vol. 3, 8-1
Recording card replacement activities Vol. 3, 8-2
XPM shelf layouts Vol. 3, 8-3
Back plane cards in an XPM Vol. 3, 8-19
Control complex cards in an XPM Vol. 3, 8-31
NT2X70 in an XPM Vol. 3, 8-42
NT6X40 in an XPM Vol. 3, 8-59
NT6X48 in LGC, PLGC, LTC, PLTC Vol. 3, 8-72
NT6X48 in MSB7 Vol. 3, 8-82
NT6X78 in an XPM Vol. 3, 8-90
NT7X03 in an XPM Vol. 3, 8-97
NT7X07AA in an LTCI Vol. 3, 8-106
NTBX02 in an XPM Vol. 3, 8-115

P-side interface cards in an XPM Vol. 3, 8-124
Processor and memory cards in an XPM Vol. 3, 8-147

9 Card replacement common procedures Vol. 3, 9-1

Introduction Vol. 3, 9-1
Application Vol. 3, 9-1
Action Vol. 3, 9-1
Activating CCS7 links Vol. 3, 9-2
Activity switch with memory match Vol. 3, 9-11
Card removal and replacement process Vol. 3, 9-19
Cleaning fiber-optic components and assemblies Vol. 3, 9-24
Correcting a load mismatch Vol. 3, 9-32
Deactivating CCS7 links Vol. 3, 9-47
Failure to switch clock mastership Vol. 3, 9-55
Loading a PM Vol. 3, 9-64
Manually busying LIM-to-MS DS30 links Vol. 3, 9-76
Manually busying Series II PM and CPM C-side links Vol. 3, 9-82
Manually busying SMA C-side links Vol. 3, 9-89
Manually busying SMA2 C-side links Vol. 3, 9-95
Memory extension in the SuperNode CM Vol. 3, 9-101
Memory extension in the SuperNode SE CM Vol. 3, 9-119
Moving an XSG to a spare XLIU Vol. 3, 9-137
Placing an MP position in service (standalone) Vol. 3, 9-145
Removing an MP position from service (standalone) Vol. 3, 9-150
Removing and replacing a card Vol. 3, 9-156
Replacing a card Vol. 3, 9-160
Replacing a card STAR or RLD Vol. 3, 9-166
Replacing a line card Vol. 3, 9-172
Reseating cards in equipment shelves Vol. 3, 9-179
Returning a card for repair or replacement Vol. 3, 9-184
Returning LIM-to-MS DS30 links to service Vol. 3, 9-188
Switching the clock source Vol. 3, 9-193
Unseating cards in equipment shelves Vol. 3, 9-200
Verifying load compatibility of SuperNode cards Vol. 3, 9-204

Card Replacement Procedures
Volume 4 of 7

1 XPM card replacement procedures Vol. 4, 1-1

NT0X10 in an IOPAC RMM Vol. 4, 1-2
NT0X10 in an OPM RMM Vol. 4, 1-6
NT0X10 in an RLCM-EDC RMM Vol. 4, 1-10
NT0X10 in an RLCM RMM Vol. 4, 1-14
NT0X10 in an RSC RMM Vol. 4, 1-18
NT0X10 in an RSC-S (DS-1) Model A RMM Vol. 4, 1-25
NT0X10 in an RSC-S (DS-1) Model B RMM Vol. 4, 1-31
NT0X10 in an RSC-S (PCM-30) Model A RMM Vol. 4, 1-37
NT0X10 in an RSC-S (PCM-30) Model B RMM Vol. 4, 1-43

NT0X91 in an IOPAC FSP Vol. 4, 1-49
NT0X91 in an RLCM Vol. 4, 1-61
NT0X91 in an RSC Vol. 4, 1-74
NT0X91AA in an OPM Vol. 4, 1-90
NT0X91AE in an OPM Vol. 4, 1-96
NT0X91AE in an RLCE Vol. 4, 1-105
NT2X06 in an IOPAC RMM Vol. 4, 1-114
NT2X06 in an OPM RMM Vol. 4, 1-121
NT2X06 in an RLCM RMM Vol. 4, 1-129
NT2X06 in an RSC RMM Vol. 4, 1-136
NT2X06 in an RSC-S (DS-1) Model A RMM Vol. 4, 1-144
NT2X06 in an RSC-S (DS-1) Model B RMM Vol. 4, 1-153
NT2X06 in an RSC-S (PCM-30) Model A RMM Vol. 4, 1-162
NT2X09 in an IOPAC RMM Vol. 4, 1-171
NT2X09 in an OPM RMM Vol. 4, 1-178
NT2X09 in an RLCM RMM Vol. 4, 1-186
NT2X09 in an RSC RMM Vol. 4, 1-194
NT2X09 in an RSC-S (DS-1) Model A RMM Vol. 4, 1-202
NT2X09 in an RSC-S (DS-1) Model B RMM Vol. 4, 1-211
NT2X09 in an RSC-S (PCM-30) Model A RMM Vol. 4, 1-220
NT2X10 in an OPM RMM Vol. 4, 1-229
NT2X10 in an RLCM RMM Vol. 4, 1-233
NT2X10 in an RSC RMM Vol. 4, 1-237
NT2X10 in an RSC-S (DS-1) Model A RMM Vol. 4, 1-244
NT2X10 in an RSC-S (DS-1) Model B RMM Vol. 4, 1-251
NT2X10 in an RSC-S (PCM-30) Model A RMM Vol. 4, 1-258
NT2X11 in an OPAC RMM Vol. 4, 1-265
NT2X11 in an OPM RMM Vol. 4, 1-270
NT2X11 in an RLCM-EDC RMM Vol. 4, 1-274
NT2X11 in an RLCM RMM Vol. 4, 1-278
NT2X11 in an RSC RMM Vol. 4, 1-282
NT2X11 in an RSC-S (DS-1) Model A RMM Vol. 4, 1-289
NT2X11 in an RSC-S (DS-1) Model B RMM Vol. 4, 1-298
NT2X11 in an RSC-S (PCM-30) Model A RMM Vol. 4, 1-307
NT2X48 in an IOPAC RMM Vol. 4, 1-316
NT2X48 in an OPM RMM Vol. 4, 1-321
NT2X48 in an RLCM RMM Vol. 4, 1-326
NT2X55 in an RSC RMM Vol. 4, 1-331
NT2X57 in an IOPAC RMM Vol. 4, 1-338
NT2X57 in an OPM RMM Vol. 4, 1-342
NT2X57 in an RLCM-EDC RMM Vol. 4, 1-346
NT2X57 in an RLCM RMM Vol. 4, 1-350
NT2X57 in an RSC RMM Vol. 4, 1-355
NT2X57 in an RSC-S (DS-1) Model A RMM Vol. 4, 1-362
NT2X57 in an RSC-S (DS-1) Model B RMM Vol. 4, 1-369
NT2X57 in an RSC-S (PCM-30) Model A RMM Vol. 4, 1-376
NT2X59 in an IOPAC RMM Vol. 4, 1-383
NT2X59 in an OPM RMM Vol. 4, 1-387
NT2X59 in an RLCM-EDC RMM Vol. 4, 1-394
NT2X59 in an RLCM RMM Vol. 4, 1-401
NT2X59 in an RSC RMM Vol. 4, 1-406

NT2X59 in an RSC-S (DS-1) Model A RMM Vol. 4, 1-413
NT2X59 in an RSC-S (DS-1) Model B RMM Vol. 4, 1-420
NT2X59 in an RSC-S (PCM-30) Model A RMM Vol. 4, 1-427
NT2X70 in an IOPAC HIE Vol. 4, 1-434
NT2X70 in an OPM HIE Vol. 4, 1-441
NT2X70 in an RLCM-EDC HIE Vol. 4, 1-455
NT2X70 in an RLCM HIE Vol. 4, 1-464
NT2X70 in an RSC Vol. 4, 1-478
NT2X70 in an SMA Vol. 4, 1-490
NT2X70 in an SMA-MVI-20 Vol. 4, 1-498
NT2X70 in an SMS Vol. 4, 1-506
NT2X70 in an SMS-R Vol. 4, 1-517
NT2X70 in an SMU Vol. 4, 1-526
NT2X90 in an IOPAC RMM Vol. 4, 1-533
NT2X90 in an OPAC RMM Vol. 4, 1-538
NT2X90 in an OPM RMM Vol. 4, 1-543
NT2X90 in an RLCM-EDC RMM Vol. 4, 1-551
NT2X90 in an RLCM RMM Vol. 4, 1-557
NT2X90 in an RSC RMM Vol. 4, 1-562
NT2X90 in an RSC-S (DS-1) Model A RMM Vol. 4, 1-569
NT2X90 in an RSC-S (DS-1) Model B RMM Vol. 4, 1-576
NT3X04 in an RSC RMM Vol. 4, 1-583
NT3X09 in an IOPAC RMM Vol. 4, 1-590
NT3X09 in an OPAC RMM Vol. 4, 1-596
NT3X09 in an OPM RMM Vol. 4, 1-601
NT3X09 in an RLCM-EDC RMM Vol. 4, 1-607
NT3X09 in an RLCM RMM Vol. 4, 1-612
NT3X09 in an RSC RMM Vol. 4, 1-617
NT3X09 in an RSC-S (DS-1) Model A RMM Vol. 4, 1-624
NT3X09 in an RSC-S (DS-1) Model B RMM Vol. 4, 1-634
NT3X09 in an RSC-S (PCM-30) Model B RMM Vol. 4, 1-644
NT3X82 in an RSC RMM Vol. 4, 1-653
NT3X83 in an RSC RMM Vol. 4, 1-660
NT4X97 in an IOPAC RMM Vol. 4, 1-668
NT4X97 in an RSC-S (PCM-30) Model A RMM Vol. 4, 1-673
NT4X97 in an RSC-S (PCM-30) Model B RMM Vol. 4, 1-680
NT4X98 in an IOPAC RMM Vol. 4, 1-687
NT4X98 in an RSC-S (PCM-30) Model B RMM Vol. 4, 1-694
NT6X17 in an IOPAC ILCM Vol. 4, 1-703
NT6X17 in an OPM Vol. 4, 1-707
NT6X17 in an RLCM Vol. 4, 1-711
NT6X17 in an RSC LCM Vol. 4, 1-715
NT6X17 in an RSC-S (DS-1) Model A LCME Vol. 4, 1-723
NT6X17 in an RSC-S (DS-1) Model B LCME Vol. 4, 1-731
NT6X17 in a STAR or RLD Vol. 4, 1-739
NT6X18 in an IOPAC ILCM Vol. 4, 1-743
NT6X18 in an OPAC LCM Vol. 4, 1-747
NT6X18 in an OPM Vol. 4, 1-751
NT6X18 in an RLCM Vol. 4, 1-755
NT6X18 in an RSC LCM Vol. 4, 1-759
NT6X18 in an RSC-S (DS-1) Model A LCME Vol. 4, 1-767

NT6X18 in an RSC-S (DS-1) Model B LCME Vol. 4, 1-775
NT6X18 in a STAR or RLD Vol. 4, 1-783
NT6X19 in an IOPAC ILCM Vol. 4, 1-787
NT6X19 in an OPM Vol. 4, 1-791
NT6X19 in an RLCM Vol. 4, 1-795
NT6X19 in an RSC LCM Vol. 4, 1-799
NT6X19 in an RSC-S (DS-1) Model A LCME Vol. 4, 1-807
NT6X19 in an RSC-S (DS-1) Model B LCME Vol. 4, 1-815
NT6X19 in a STAR or RLD Vol. 4, 1-823
NT6X20 in an IOPAC ILCM Vol. 4, 1-827
NT6X20 in an OPM Vol. 4, 1-831
NT6X20 in an RLCM Vol. 4, 1-835
NT6X20 in an RSC LCM Vol. 4, 1-839
NT6X20 in an RSC-S (DS-1) Model A LCME Vol. 4, 1-847
NT6X20 in an RSC-S (DS-1) Model B LCME Vol. 4, 1-855
NT6X20 in a STAR or RLD Vol. 4, 1-863
NT6X21 in an IOPAC ILCM Vol. 4, 1-867
NT6X21 in an OPM Vol. 4, 1-871
NT6X21 in an RLCM Vol. 4, 1-875
NT6X21 in an RLCM-EDC LCM Vol. 4, 1-879
NT6X21 in an RSC-S (DS-1) Model A LCME Vol. 4, 1-883
NT6X21 in an RSC-S (DS-1) Model B LCME Vol. 4, 1-893
NT6X21 in an RSC-S (PCM-30) Model A LCME Vol. 4, 1-902
NT6X21 in an RSC-S (PCM-30) Model B LCME Vol. 4, 1-911
NT6X21 in a STAR or RLD Vol. 4, 1-920
NT6X27 in an IOPAC HIE Vol. 4, 1-924
NT6X27 in an OPM HIE Vol. 4, 1-931
NT6X27 in an RLCM HIE Vol. 4, 1-938
NT6X30 in an RSC LCM Vol. 4, 1-945
NT6X30 in an RSC-S (DS-1) Model A LCME Vol. 4, 1-960
NT6X30 in an RSC-S (DS-1) Model B LCME Vol. 4, 1-974
NT6X30 in an RSC-S (PCM-30) Model A LCME Vol. 4, 1-988
NT6X30 in an RSC-S (PCM-30) Model B LCME Vol. 4, 1-1002
NT6X36 in an IOPAC FSP Vol. 4, 1-1016
NT6X36 in an OPM Vol. 4, 1-1021
NT6X36 in an RLCM-EDC FSP Vol. 4, 1-1026
NT6X36 in an RLCM FSP Vol. 4, 1-1031
NT6X36 in an RSC-S FSP for CRSC or CEXT Vol. 4, 1-1036

Card Replacement Procedures
Volume 5 of 7

1 XPM card replacement procedures (continued) Vol. 5, 1-1
NT6X40 in an SMA Vol. 5, 1-2
NT6X40 in an SMA-MVI-20 Vol. 5, 1-14
NT6X40 in an SMA2 Vol. 5, 1-26
NT6X40 in an SMS Vol. 5, 1-38
NT6X40 in an SMU Vol. 5, 1-51

NT6X41 in an SMA Vol. 5, 1-64
NT6X41 in an SMA-MVI-20 Vol. 5, 1-71
NT6X41 in an SMS Vol. 5, 1-78
NT6X41 in an SMS-R Vol. 5, 1-87
NT6X41 in an SMU Vol. 5, 1-95
NT6X42 in an SMA Vol. 5, 1-101
NT6X42 in an SMA-MVI-20 Vol. 5, 1-107
NT6X42 in an SMS Vol. 5, 1-114
NT6X42 in an SMS-R Vol. 5, 1-122
NT6X44 in an RSC Vol. 5, 1-130
NT6X44 in an SMA Vol. 5, 1-138
NT6X44 in an SMA-MVI-20 Vol. 5, 1-144
NT6X44 in an SMS Vol. 5, 1-150
NT6X44 in an SMS-R Vol. 5, 1-158
NT6X45 in an IOPAC HIE Vol. 5, 1-166
NT6X45 in an OPAC HIE Vol. 5, 1-172
NT6X45 in an OPM HIE Vol. 5, 1-178
NT6X45 in an RLCM HIE Vol. 5, 1-184
NT6X47 in an IOPAC HIE Vol. 5, 1-190
NT6X47 in an OPM HIE Vol. 5, 1-196
NT6X47 in an RLCM HIE Vol. 5, 1-202
NT6X48 in an RSC Vol. 5, 1-208
NT6X50 in an OPAC HIE Vol. 5, 1-216
NT6X50 in an OPM HIE Vol. 5, 1-223
NT6X50 in an RLCM-EDC HIE Vol. 5, 1-230
NT6X50 in an RLCM HIE Vol. 5, 1-237
NT6X50 in an RSC Vol. 5, 1-244
NT6X50 in an SMA Vol. 5, 1-259
NT6X50 in an SMA-MVI-20 Vol. 5, 1-275
NT6X51 in an IOPAC ILCM Vol. 5, 1-291
NT6X51 in an OPAC LCM Vol. 5, 1-298
NT6X51 in an OPM Vol. 5, 1-305
NT6X51 in an RLCM Vol. 5, 1-312
NT6X51 in an RLCM-EDC Vol. 5, 1-319
NT6X51 in an RSC-S (DS-1) Model A LCM Vol. 5, 1-324
NT6X51 in an RSC-S (DS-1) Model B LCME Vol. 5, 1-332
NT6X51 in an RSC-S (PCM-30) Model A LCM Vol. 5, 1-339
NT6X51 in an RSC-S (PCM-30) Model B LCM Vol. 5, 1-347
NT6X52 in an IOPAC ILCM Vol. 5, 1-355
NT6X52 in an OPAC LCM Vol. 5, 1-361
NT6X52 in an OPM Vol. 5, 1-367
NT6X52 in an RLCM Vol. 5, 1-373
NT6X52 in an RLCM-EDC Vol. 5, 1-379
NT6X52 in an RSC LCM Vol. 5, 1-384
NT6X52 in an RSC-S (DS-1) Model A LCME Vol. 5, 1-392
NT6X52 in an RSC-S (DS-1) Model B LCME Vol. 5, 1-401
NT6X52 in an RSC-S (PCM-30) Model A LCME Vol. 5, 1-410
NT6X53 in an IOPAC ILCM Vol. 5, 1-418
NT6X53 in an OPAC LCM Vol. 5, 1-425
NT6X53 in an OPM Vol. 5, 1-432
NT6X53 in an RLCM Vol. 5, 1-444

NT6X53 in an RLCM-EDC Vol. 5, 1-453
NT6X53 in an RSC LCM Vol. 5, 1-460
NT6X53 in an RSC-S (DS-1) Model A LCM(E) Vol. 5, 1-469
NT6X53 in an RSC-S (DS-1) Model B LCM(E) Vol. 5, 1-478
NT6X53 in a STAR Vol. 5, 1-487
NT6X54 in an IOPAC ILCM Vol. 5, 1-493
NT6X54 in an OPAC LCM Vol. 5, 1-500
NT6X54 in an OPM Vol. 5, 1-509
NT6X54 in an RLCM Vol. 5, 1-518
NT6X54 in an RLCM-EDC Vol. 5, 1-527
NT6X54 in an RSC Vol. 5, 1-533
NT6X54 in an RSC-S (DS-1) Model A LCM(E) Vol. 5, 1-542
NT6X54 in an RSC-S (DS-1) Model B LCM(E) Vol. 5, 1-549
NT6X54 in a STAR Vol. 5, 1-556
NT6X60 in an IOPAC HIE Vol. 5, 1-565
NT6X60 in an OPAC HIE Vol. 5, 1-572
NT6X60 in an OPM HIE Vol. 5, 1-579
NT6X60 in an RLCM HIE Vol. 5, 1-587
NT6X69 in an RSC-M Vol. 5, 1-595
NT6X69 in an RSC RCC/RCC2 Vol. 5, 1-605
NT6X69 in an RSC-S (DS-1) Model A RCC2 Vol. 5, 1-613
NT6X69 in an RSC-S (DS-1) Model B RCC2 Vol. 5, 1-622
NT6X69 in an RSC-S (PCM-30) Model A RCO2 Vol. 5, 1-630
NT6X69 in an RSC-S (PCM-30) Model B RCO2 Vol. 5, 1-639
NT6X69 in an SMA Vol. 5, 1-648
NT6X69 in an SMA-MVI-20 Vol. 5, 1-654
NT6X69 in an SMS Vol. 5, 1-661
NT6X69 in an SMS-R Vol. 5, 1-670
NT6X69 in an SMU Vol. 5, 1-678
NT6X71 in an IOPAC ILCM Vol. 5, 1-684
NT6X71 in an OPM Vol. 5, 1-688
NT6X71 in an RLCM Vol. 5, 1-692
NT6X71 in an RSC LCM Vol. 5, 1-696
NT6X71 in an RSC-S (DS-1) Model A LCME Vol. 5, 1-705
NT6X71 in an RSC-S (DS-1) Model B LCME Vol. 5, 1-713
NT6X71 in a STAR or RLD Vol. 5, 1-721
NT6X72 in an RSC Vol. 5, 1-725
NT6X73 in an IOPAC HIE Vol. 5, 1-734
NT6X73 in an OPAC HIE Vol. 5, 1-738
NT6X73 in an OPM HIE Vol. 5, 1-742
NT6X73 in an RLCM-EDC HIE Vol. 5, 1-746
NT6X73 in an RLCM HIE Vol. 5, 1-751
NT6X74 in an IOPAC RMM Vol. 5, 1-755
NT6X74 in an OPM RMM Vol. 5, 1-761
NT6X74 in an RLCM-EDC RMM Vol. 5, 1-768
NT6X74 in an RLCM RMM Vol. 5, 1-775
NT6X74 in an RSC RMM Vol. 5, 1-782
NT6X74 in an RSC-S (DS-1) Model A RMM Vol. 5, 1-790
NT6X74 in an RSC-S (DS-1) Model B RMM Vol. 5, 1-799
NT6X74 in an RSC-S (PCM-30) Model A RMM Vol. 5, 1-808
NT6X75 in an IOPAC HIE Vol. 5, 1-817

NT6X75 in an OPAC HIE Vol. 5, 1-824
NT6X75 in an OPM HIE Vol. 5, 1-831
NT6X75 in an RLCM HIE Vol. 5, 1-838
NT6X76 in an RSC LCME Vol. 5, 1-845
NT6X76 in an RSC-S (DS-1) Model A LCME Vol. 5, 1-853
NT6X76 in an RSC-S (DS-1) Model B LCME Vol. 5, 1-861
NT6X76 in a STAR or RLD Vol. 5, 1-869
NT6X78 in an RSC-M Vol. 5, 1-876
NT6X78 in an RSC RCC/RCC2 Vol. 5, 1-883
NT6X78 in an RSC-S (DS-1) Model A RCC2 Vol. 5, 1-891
NT6X78 in an RSC-S (DS-1) Model B RCC2 Vol. 5, 1-898
NT6X78 in an RSC-S (PCM-30) Model A RCO2 Vol. 5, 1-905
NT6X78 in an RSC-S (PCM-30) Model B RCO2 Vol. 5, 1-912
NT6X78 in an SMA Vol. 5, 1-919
NT6X78 in an SMA-MVI-20 Vol. 5, 1-925
NT6X78 in an SMA2 Vol. 5, 1-932
NT6X78 in an SMS Vol. 5, 1-939
NT6X78 in an SMU Vol. 5, 1-946
NT6X80 in an SMA Vol. 5, 1-951
NT6X80 in an SMA-MVI-20 Vol. 5, 1-957
NT6X80 in an SMS Vol. 5, 1-964
NT6X80 in an SMS-R Vol. 5, 1-972
NT6X80 in an SMU Vol. 5, 1-981

Card Replacement Procedures
Volume 6 of 7

1 XPM card replacement procedures (continued) Vol. 6, 1-1
NT6X85 in an SMS Vol. 6, 1-2
NT6X85 in an SMS-R Vol. 6, 1-13
NT6X85 in an SMU Vol. 6, 1-24
NT6X86 in an SMS Vol. 6, 1-30
NT6X86 in an SMS-R Vol. 6, 1-39
NT6X87 in an RSC LCME Vol. 6, 1-48
NT6X87 in an RSC-S (DS-1) Model B LCME Vol. 6, 1-56
NT6X92 in an RSC-M Vol. 6, 1-64
NT6X92 in an RSC RCC/RCC2 Vol. 6, 1-71
NT6X92 in an RSC-S (DS-1) Model A RCC2 Vol. 6, 1-79
NT6X92 in an RSC-S (DS-1) Model B RCC2 Vol. 6, 1-87
NT6X92 in an RSC-S (PCM-30) Model A RCO2 Vol. 6, 1-95
NT6X92 in an RSC-S (PCM-30) Model B RCO2 Vol. 6, 1-104
NT6X92 in an SMA Vol. 6, 1-112
NT6X92 in an SMA-MVI-20 Vol. 6, 1-118
NT6X92 in an SMA2 Vol. 6, 1-125
NT6X92 in an SMS Vol. 6, 1-132
NT6X92 in an SMU Vol. 6, 1-140
NT6X99 in an IOPAC ILCM Vol. 6, 1-146
NT6X99 in an OPAC LCM Vol. 6, 1-150

NT6X99 in an OPM Vol. 6, 1-154
NT6X99 in an RLCM Vol. 6, 1-158
NT6X99 in an RSC LCM Vol. 6, 1-162
NT6X99 in an RSC-S (DS-1) Model A LCME Vol. 6, 1-170
NT6X99 in an RSC-S (DS-1) Model B LCME Vol. 6, 1-178
NT6X99 in a STAR or RLD Vol. 6, 1-186
NT7X05 in an RSC RCC/RCC2 Vol. 6, 1-190
NT7X05 in an RSC-S (DS-1) Model A RCC2 Vol. 6, 1-198
NT7X05 in an RSC-S (DS-1) Model B RCC2 Vol. 6, 1-207
NT7X05 in an RSC-S (PCM-30) Model A RCO2 Vol. 6, 1-216
NT7X05 in an RSC-S (PCM-30) Model B RCO2 Vol. 6, 1-225
NT7X05 in an SMS Vol. 6, 1-234
NT7X05 in an SMS-R Vol. 6, 1-243
NT7X05 in an SMU Vol. 6, 1-252
NT8X02 in an OPAC BCU Vol. 6, 1-261
NT8X02 in an OPM BCU Vol. 6, 1-265
NT8X18 in an SMS-R Vol. 6, 1-270
NTAX74 in an RSC-S (DS-1) Model A RCC2 Vol. 6, 1-281
NTAX74 in an RSC-S (DS-1) Model B RCC2 Vol. 6, 1-292
NTAX74 in an RSC-S (PCM-30) Model A RCO2 Vol. 6, 1-303
NTAX74 in an RSC-S (PCM-30) Model B RCO2 Vol. 6, 1-315
NTAX74 in an SMA Vol. 6, 1-327
NTAX74 in an SMA-MVI-20 Vol. 6, 1-337
NTAX74 in an SMA2 Vol. 6, 1-347
NTAX78 in an SMA Vol. 6, 1-355
NTAX78 in an SMA-MVI-20 Vol. 6, 1-362
NTAX78 in an SMU Vol. 6, 1-369
NTBX01 in an RSC RCC2 Vol. 6, 1-374
NTBX01 in an RSC-S (DS-1) Model A RCC2 Vol. 6, 1-381
NTBX01 in an RSC-S (DS-1) Model B RCC2 Vol. 6, 1-390
NTBX01 in an RSC-S (PCM-30) Model A RCO2 Vol. 6, 1-399
NTBX01 in an RSC-S (PCM-30) Model B RCO2 Vol. 6, 1-408
NTBX01 in an SMA Vol. 6, 1-417
NTBX01 in an SMA-MVI-20 Vol. 6, 1-423
NTBX01 in an SMA2 Vol. 6, 1-430
NTBX01 in an SMU Vol. 6, 1-437
NTBX02 in an RSC RCC2 Vol. 6, 1-443
NTBX02 in an RSC-S (DS-1) Model A RCC2 Vol. 6, 1-456
NTBX02 in an RSC-S (DS-1) Model B RCC2 Vol. 6, 1-469
NTBX02 in an RSC-S (PCM-30) Model A RCO2 Vol. 6, 1-482
NTBX02 in an RSC-S (PCM-30) Model B RCO2 Vol. 6, 1-495
NTBX02 in an SMA Vol. 6, 1-508
NTBX02 in an SMA-MVI-20 Vol. 6, 1-515
NTBX02 in an SMA2 Vol. 6, 1-523
NTBX02 in an SMU Vol. 6, 1-529
NTBX26 in an RSC LCME Vol. 6, 1-538
NTBX26 in an RSC-S (DS-1) Model A LCME Vol. 6, 1-546
NTBX26 in an RSC-S (DS-1) Model B LCME Vol. 6, 1-554
NTBX27 in an RSC LCME Vol. 6, 1-562
NTBX27 in an RSC-S (DS-1) Model A LCME Vol. 6, 1-570
NTBX27 in an RSC-S (DS-1) Model B LCME Vol. 6, 1-578

NTBX27 in a STAR or RLD Vol. 6, 1-586
NTBX34 in an RSC LCME Vol. 6, 1-593
NTBX34 in an RSC-S (DS-1) Model A LCME Vol. 6, 1-601
NTBX34 in an RSC-S (DS-1) Model B LCME Vol. 6, 1-611
NTBX34 in an RSC-S (PCM-30) Model A LCME Vol. 6, 1-621
NTBX35 in an RSC LCME Vol. 6, 1-630
NTBX35 in an RSC-S (DS-1) Model A LCME Vol. 6, 1-638
NTBX35 in an RSC-S (DS-1) Model B LCME Vol. 6, 1-648
NTBX35 in an RSC-S (PCM-30) Model A LCME Vol. 6, 1-658
NTBX36 in an RSC LCME Vol. 6, 1-667
NTBX36 in an RSC-S (DS-1) Model A LCME Vol. 6, 1-677
NTBX36 in an RSC-S (DS-1) Model B LCME Vol. 6, 1-687
NTBX72 in an RSC LCME Vol. 6, 1-697
NTBX72 in an RSC-S (DS-1) Model A LCME Vol. 6, 1-706
NTBX72 in an RSC-S (DS-1) Model B LCME Vol. 6, 1-715
NTBX72 in an RSC-S (PCM-30) Model A LCME Vol. 6, 1-724
NTEX17 in an RLCM Vol. 6, 1-733
NTEX17 in an RSC LCM Vol. 6, 1-743
NTEX17 in an RSC-S (DS-1) Model A LCME Vol. 6, 1-753
NTEX17 in an RSC-S (DS-1) Model B LCM Vol. 6, 1-763
NTEX17 in a STAR Vol. 6, 1-773
NTEX54 in an RLCM Vol. 6, 1-783
NTEX54 in an RSC LCM Vol. 6, 1-800
NTEX54 in an RSC-S (DS-1) Model A LCME Vol. 6, 1-817
NTEX54 in an RSC-S (DS-1) Model B LCM Vol. 6, 1-834
NTEX54 in a STAR Vol. 6, 1-851
NTMX45 in an IOPAC HIE Vol. 6, 1-868
NTMX45 in an OPAC HIE Vol. 6, 1-878
NTMX45 in an OPM HIE Vol. 6, 1-888
NTMX45 in an RLCM HIE Vol. 6, 1-898
NTMX71 in an RSC Vol. 6, 1-908
NTMX71 in an SMA Vol. 6, 1-916
NTMX71 in an SMA-MVI-20 Vol. 6, 1-924
NTMX71 in an SMS Vol. 6, 1-932
NTMX71 in an SMU Vol. 6, 1-940
NTMX72 in an RSC-M Vol. 6, 1-949
NTMX72 in an RSC RCC2 Vol. 6, 1-957
NTMX72 in an RSC-S (DS-1) Model A RCC2 Vol. 6, 1-966
NTMX72 in an RSC-S (DS-1) Model B RCC2 Vol. 6, 1-975
NTMX72 in an RSC-S (PCM-30) Model A RCO2 Vol. 6, 1-984
NTMX72 in an RSC-S (PCM-30) Model B RCO2 Vol. 6, 1-993
NTMX72 in an SMA2 Vol. 6, 1-1002

Card Replacement Procedures
Volume 7 of 7

1 XPM card replacement procedures (continued) Vol. 7, 1-1
NTMX73 in an RSC-M Vol. 7, 1-2

NTMX73 in an RSC RCC2 Vol. 7, 1-9
NTMX73 in an RSC-S (DS-1) Model A RCC2 Vol. 7, 1-17
NTMX73 in an RSC-S (DS-1) Model B RCC2 Vol. 7, 1-26
NTMX73 in an RSC-S (PCM-30) Model A RCO2 Vol. 7, 1-36
NTMX73 in an RSC-S (PCM-30) Model B RCO2 Vol. 7, 1-45
NTMX73 in an SMA2 Vol. 7, 1-54
NTMX74 in an RSC-M Vol. 7, 1-60
NTMX74 in an RSC RCC2 Vol. 7, 1-69
NTMX74 in an RSC-S (DS-1) Model A RCC2 Vol. 7, 1-77
NTMX74 in an RSC-S (DS-1) Model B RCC2 Vol. 7, 1-86
NTMX74 in an RSC-S (PCM-30) Model A RCO2 Vol. 7, 1-95
NTMX74 in an RSC-S (PCM-30) Model B RCO2 Vol. 7, 1-104
NTMX75 in an RSC-M Vol. 7, 1-113
NTMX75 in an RSC RCC2 Vol. 7, 1-120
NTMX75 in an RSC-S (DS-1) Model A RCC2 Vol. 7, 1-128
NTMX75 in an RSC-S (DS-1) Model B RCC2 Vol. 7, 1-136
NTMX75 in an RSC-S (PCM-30) Model A RCO2 Vol. 7, 1-144
NTMX75 in an RSC-S (PCM-30) Model B RCO2 Vol. 7, 1-153
NTMX75 in an SMA2 Vol. 7, 1-162
NTMX76 in an RSC-M Vol. 7, 1-168
NTMX76 in an RSC RCC2 Vol. 7, 1-175
NTMX76 in an RSC-S (DS-1) Model A RCC2 Vol. 7, 1-182
NTMX76 in an RSC-S (DS-1) Model B RCC2 Vol. 7, 1-188
NTMX76 in an RSC-S (PCM-30) Model A RCO2 Vol. 7, 1-195
NTMX76 in an RSC-S (PCM-30) Model B RCO2 Vol. 7, 1-205
NTMX76 in an SMA2 Vol. 7, 1-214
NTMX77 in an RSC Vol. 7, 1-221
NTMX77 in an RSC-M Vol. 7, 1-234
NTMX77 in an RSC-S (DS-1) Model A RCC2 Vol. 7, 1-241
NTMX77 in an RSC-S (DS-1) Model B RCC2 Vol. 7, 1-254
NTMX77 in an RSC-S (PCM-30) Model A RCO2 Vol. 7, 1-267
NTMX77 in an RSC-S (PCM-30) Model B RCO2 Vol. 7, 1-280
NTMX77 in an SMS Vol. 7, 1-293
NTMX77 in an SMS-R Vol. 7, 1-306
NTMX77 in an SMU Vol. 7, 1-318
NTMX79 in an RSC EXT Vol. 7, 1-333
NTMX79 in an RSC-M Vol. 7, 1-343
NTMX79 in an RSC-S (DS-1) Model A EXT Vol. 7, 1-349
NTMX79 in an RSC-S (DS-1) Model B EXT Vol. 7, 1-359
NTMX79 in an RSC-S (PCM-30) Model A EXT Vol. 7, 1-370
NTMX79 in an RSC-S (PCM-30) Model B EXT Vol. 7, 1-380
NTMX79 in an SMA2 Vol. 7, 1-390
NTMX81 in an RSC RCC2 Vol. 7, 1-397
NTMX81 in an RSC-S (DS-1) Model A RCC2 Vol. 7, 1-409
NTMX81 in an RSC-S (DS-1) Model B RCC2 Vol. 7, 1-421
NTMX81 in an SMA2 Vol. 7, 1-435
NTMX81 in a STAR Vol. 7, 1-451
NTMX82 in an RSC-M Vol. 7, 1-465
NTMX82 in an RSC-S (PCM-30) Model A RCO2 Vol. 7, 1-476
NTMX82 in an RSC-S (PCM-30) Model B RCO2 Vol. 7, 1-486
NTMX87 in an RSC-M Vol. 7, 1-496

NTMX87 in an RSC RCC2 Vol. 7, 1-508
NTMX87 in an RSC-S (DS-1) Model A RCC2 Vol. 7, 1-528
NTMX87 in an RSC-S (DS-1) Model B RCC2 Vol. 7, 1-548
NTMX87 in an RSC-S (PCM-30) Model A RCO2 Vol. 7, 1-571
NTMX87 in an RSC-S (PCM-30) Model B RCO2 Vol. 7, 1-592
NTMX87 in an SMA2 Vol. 7, 1-613
NTRX41 in an IOPAC MSP Vol. 7, 1-630
NTRX41 in an OPAC MSP Vol. 7, 1-635
NTRX41 in an RSC-M/MSP Vol. 7, 1-640
NTRX41 in an RSC MSP Vol. 7, 1-645
NTRX41 in an RSC-S (DS-1) Model B MSP Vol. 7, 1-650
NTRX41 in an SMA2 MSP Vol. 7, 1-655
NTRX42 in an IOPAC MSP Vol. 7, 1-660
NTRX42 in an OPAC MSP Vol. 7, 1-677
NTRX42 in an RSC-M/MSP Vol. 7, 1-695
NTRX42 in an RSC MSP Vol. 7, 1-707
NTRX42 in an RSC-S (DS-1) Model B MSP Vol. 7, 1-726
NTRX42 in an RSC-S (PCM-30) Model B MSP Vol. 7, 1-746
NTRX42 in an SMA2 MSP Vol. 7, 1-766
NTRX43 in an IOPAC MSP Vol. 7, 1-778
NTRX43 in an OPAC MSP Vol. 7, 1-785
NTRX43 in an RSC-M/MSP Vol. 7, 1-792
NTRX43 in an RSC MSP Vol. 7, 1-800
NTRX43 in an RSC-S (DS-1) Model B MSP Vol. 7, 1-808
NTRX43 in an SMA2 MSP Vol. 7, 1-816
NTRX44 in an IOPAC MSP Vol. 7, 1-824
NTRX44 in an OPAC MSP Vol. 7, 1-836
NTRX44 in an RSC MSP Vol. 7, 1-848
NTRX44 in an RSC-S (DS-1) Model B MSP Vol. 7, 1-858
NTRX54 in an RSC-M/MSP Vol. 7, 1-868
NTRX54 in an RSC MSP Vol. 7, 1-875
NTRX54 in an RSC-S (DS-1) Model B MSP Vol. 7, 1-882
NTRX54 in an SMA2 MSP Vol. 7, 1-889
NTRX66 MSP Vol. 7, 1-896
NTTR46 in an RLD Vol. 7, 1-902
NTTR47 in an RLD Vol. 7, 1-908
NTTR60 in a STAR Vol. 7, 1-914
NTTR66 in an RLD Vol. 7, 1-921
NTTR67 in an RLD Vol. 7, 1-927
NTTR70 in an RLD Vol. 7, 1-934
NTTR71 in an RLD Vol. 7, 1-941
NTTR72 in an RLD Vol. 7, 1-946
NTTR73 in a STAR Vol. 7, 1-952
NTTR74 in a STAR Vol. 7, 1-956
NTTR75 in a STAR Vol. 7, 1-962
NTTR76 in a STAR Vol. 7, 1-970
NTTR77 in a STAR Vol. 7, 1-979
NTTR87 in a STAR Vol. 7, 1-986

About this document

How to check the version and issue of this document

The version and issue of the document are indicated by numbers, for example, 01.01.

The first two digits indicate the version. The version number increases each time the document is updated to support a new software release. For example, the first release of a document is 01.01. In the *next* software release cycle, the first release of the same document is 02.01.

The second two digits indicate the issue. The issue number increases each time the document is revised but rereleased in the *same* software release cycle. For example, the second release of a document in the same software release cycle is 01.02.

To determine which version of this document applies to the software in your office and how documentation for your product is organized, check the release information in *Product Documentation Directory*, 297-8991-001.

References in this document

The following documents are referred to in this document:

- *1-Meg Modem Service Network Implementation Manual*, 297-8063-200
- *Alarm Clearing and Performance Monitoring Procedures*
- *Customer Data Schema Reference Manual*, 297-8021-351
- *Digital Recorded Announcement Machine DRAM and EDRAM Guide*, 297-1001-527
- *Routine Maintenance Procedures*

As of NA0011 (LEC and LET) and EUR010 (EUR) releases, any references to the data schema section of the Translations Guide will be mapped to the *Customer Data Schema Reference Manual*.

What precautionary messages mean

The types of precautionary messages used in NT documents include attention boxes and danger, warning, and caution messages.

An attention box identifies information that is necessary for the proper performance of a procedure or task or the correct interpretation of information or data. Danger, warning, and caution messages indicate possible risks.

Examples of the precautionary messages follow.

ATTENTION - Information needed to perform a task

ATTENTION

If the unused DS-3 ports are not deprovisioned before a DS-1/VT Mapper is installed, the DS-1 traffic will not be carried through the DS-1/VT Mapper, even though the DS-1/VT Mapper is properly provisioned.

DANGER - Possibility of personal injury

DANGER

Risk of electrocution

Do not open the front panel of the inverter unless fuses F1, F2, and F3 have been removed. The inverter contains high-voltage lines. Until the fuses are removed, the high-voltage lines are active, and you risk being electrocuted.

WARNING - Possibility of equipment damage

WARNING

Damage to the backplane connector pins

Align the card before seating it, to avoid bending the backplane connector pins. Use light thumb pressure to align the card with the connectors. Next, use the levers on the card to seat the card into the connectors.

CAUTION - Possibility of service interruption or degradation

> **CAUTION**
> **Possible loss of service**
> Before continuing, confirm that you are removing the card from the inactive unit of the peripheral module. Subscriber service will be lost if you remove a card from the active unit.

How commands, parameters, and responses are represented

Commands, parameters, and responses in this document conform to the following conventions.

Input prompt (>)

An input prompt (>) indicates that the information that follows is a command:

```
>BSY
```

Commands and fixed parameters

Commands and fixed parameters that are entered at a MAP terminal are shown in uppercase letters:

```
>BSY CTRL
```

Variables

Variables are shown in lowercase letters:

```
>BSY  CTRL  ctrl_no
```

The letters or numbers that the variable represents must be entered. Each variable is explained in a list that follows the command string.

Responses

Responses correspond to the MAP display and are shown in a different type:

```
FP 3 Busy CTRL 0: Command request has been submitted.

FP 3 Busy CTRL 0: Command passed.
```

1 Breaker interface panel card replacement procedures

Introduction

This chapter contains card replacement procedures for the Universal Edge 9000 (UEN) breaker interface panel (BIP).

Each procedure contains the following sections:

- Application
- Common procedures
- Action

Application

This section identifies the BIP card(s) included in the replacement procedure.

Common procedures

This section lists common procedures for the BIP card replacement procedure. A common procedure is a series of steps that repeat in maintenance procedures. The removal and replacement of a card is an example of a common procedure. Common procedures are in the common procedures chapter in this NTP.

Do not use common procedures unless the step-action procedure directs you to do so.

Action

This section contains a summary flowchart and a list of steps. Use the flowchart to review the procedure. Follow the steps to perform the procedure.

Recording card replacement activities

When you replace a card, record the following information in office records:

- the serial number of the card you replaced
- the date you replaced the card
- the reason you replaced the card

Circuit breaker in a BIP

Application

Use this procedure to replace the breakers in the NTNY17 breaker interface panel (BIP) identified in the table that follows.

Part number	Name
A0829305	10 Amp plug-in circuit breaker
A0829380	15 Amp plug-in circuit breaker

Common procedures

This procedure does not refer to any common procedures.

Next level of maintenance

Repeat this procedure if it is not successful when you first perform the procedure.

A problem can occur that requires the help of the local maintenance personnel. Gather all important logs, reports, and system information (that is, product type and current software load) for analysis. The related logs, maintenance notes, and system information help make sure that the next level of maintenance and support can find the problem. More detail about logs appears in the *Log Report Reference Manual*.

Action

The flowchart that follows provides a summary of this procedure. Use the instructions in the step action procedure that follows the flowchart to replace the card.

Circuit breaker in a BIP (continued)

Summary of replacing alarm Circuit breaker in BIP

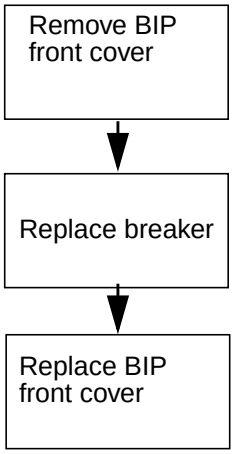

This flowchart summarizes the procedure.

Use the instructions that follow this flowchart to perform the procedure.

Circuit breaker in a BIP (continued)

Replacing a Circuit breaker module in a BIP

At your current location

1 Proceed only if you have been directed to this card replacement procedure from a step in a maintenance procedure, are using the procedure for verifying or accepting cards, or have been directed to this procedure by your maintenance support group.

2 Obtain a replacement breaker. Verify that the replacement breaker has the same product equipment code (PEC), including suffix, as the breaker that is to be removed.

At the UEN frame

3 Make sure the UEN shelf components are redundantly powered from the PDC feeds.

Breaker interface panel

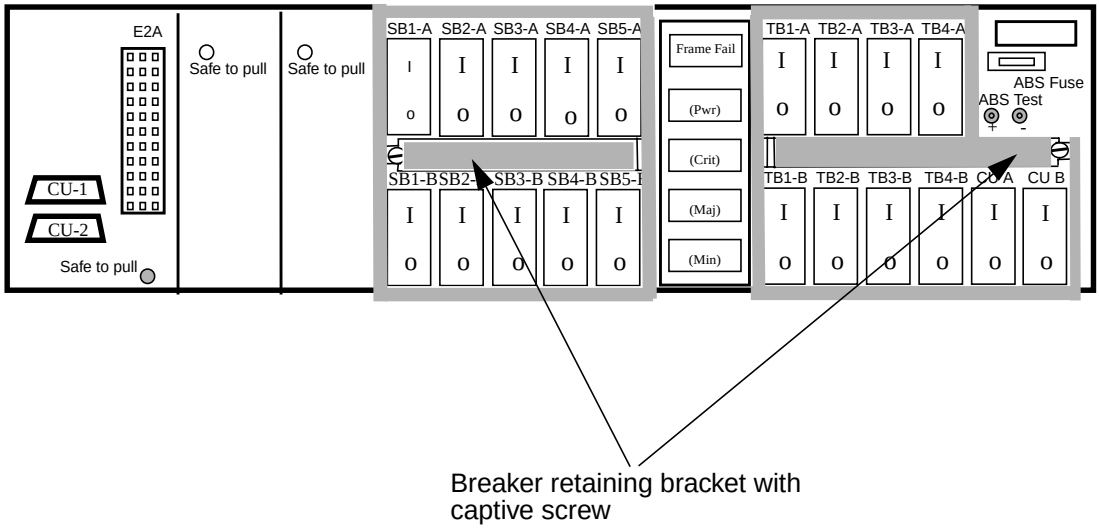

Note: This procedure can be performed on equipment in service without the need to power down the shelves. However, it is recommended that this procedure be performed during periods of low traffic.

4 Remove the BIP front cover by pulling it towards you.

5 Record the position (on or off) of the circuit breaker to be replaced (SB1A to SB5A, SB1B to SB5B, TB1-A to TB4-A, TB1-B to TB4-B, CUA and CUB) depending on the circuit breaker being replaced.

Note: Turning off the circuit breaker generates a minor alarm because the circuit breaker A or B power failure alarm points are enabled. If an audible alarm is generated, press the alarm cut-off (ACO) button.

6 At the BIP, turn off the circuit breaker noted in step 5 that needs to be replaced.

Circuit breaker in a BIP (end)

7 Remove the breaker retaining bracket that runs between and around the outside of the two rows of breakers by loosening the captive screw on the right or left side of the bar, depending on the breaker to be replaced. See the “Breaker interface panel” figure.

8 Pull the breaker out.

9 Insert the replacement circuit breaker into the empty slot.

10 Replace the breaker retaining bracket by locking the left or right side of the bar into place, then swinging the bar into place until the captive screw aligns with the screw hole.

11 Use a slot screwdriver to fasten the captive screw on the retaining bar into place.

12 Switch the circuit breaker to the On position.

13 Replace the BIP cover.

14 Verify that the alarm generated in step 5 clears.

15 The procedure is complete.

NTNY24 in a BIP

Application

Use this procedure to replace the NTNY24 card in the NTNY17 breaker interface panel (BIP) identified in the table that follows.

PEC	Suffixes	Name
NTNY24	AA	Alarm card assembly

If you cannot identify the PEC, suffix, and shelf or frame for the card you want to replace, refer to the “Index” in this document. The index lists the cards, shelves, and frames in this card replacement NTP.

Common procedures

This procedure refers to the “Returning a card for repair or replacement” common procedure.

Do not go to the common procedure unless the step-action procedure directs you to do so.

Next level of maintenance

Repeat this procedure if it is not successful when you first perform the procedure.

A problem can occur that requires the help of the local maintenance personnel. Gather all important logs, reports, and system information (that is, product type and current software load) for analysis. The related logs, maintenance notes, and system information help make sure that the next level of maintenance and support can find the problem. More detail about logs appears in the *Log Report Reference Manual*.

Action

The flowchart that follows provides a summary of this procedure. Use the instructions in the step action procedure that follows the flowchart to replace the card.

NTNY24
in a BIP (continued)

Summary of replacing alarm NTNY24 in BIP

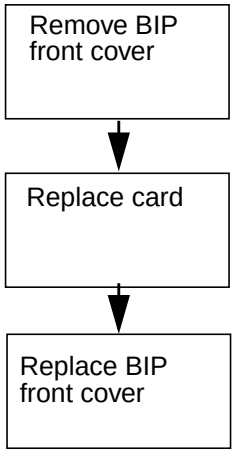

This flowchart summarizes the procedure.

Use the instructions that follow this flowchart to perform the procedure.

NTNY24
in a BIP (continued)

Replacing alarm NTNY24 in a BIP

At your current location

1 Proceed only if you have been directed to this card replacement procedure from a step in a maintenance procedure, are using the procedure for verifying or accepting cards, or have been directed to this procedure by your maintenance support group.

2 Obtain a replacement card. Verify that the replacement card has the same product equipment code (PEC), including suffix, as the card that is to be removed.

At the UEN frame

3 Remove the BIP front cover.

4 Loosen the two hold-down screws on the faceplate of the alarm card

5 Disconnect the two cooling unit alarm connectors on the face of the alarm card and if equipped, use a tie-wrap tool to remove the alarm leads from the E2A connector.

6 Remove the card from the BIP, as shown in the following figure.

Front view of BIP with the alarm card extended

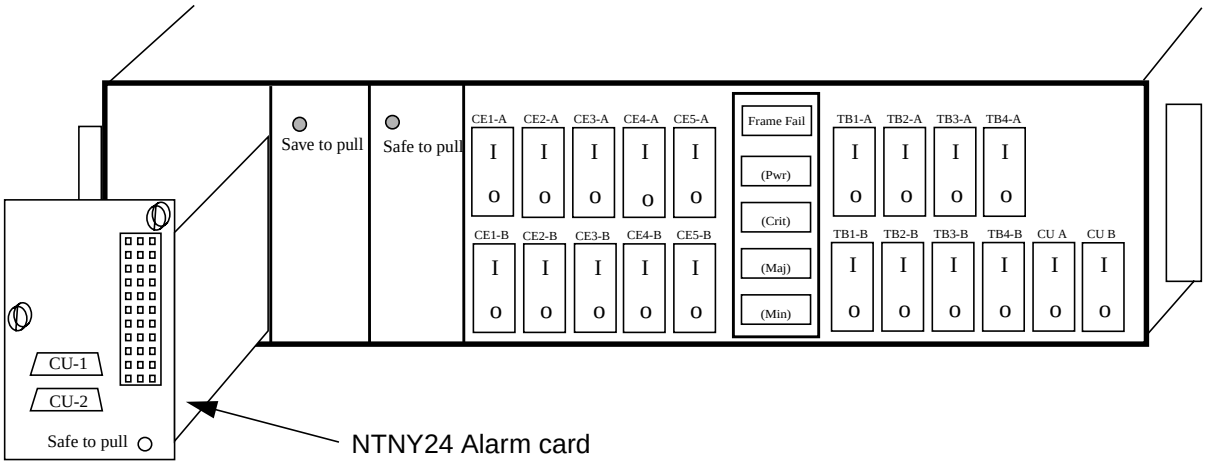

7 Insert a replacement alarm card in the BIP and fasten the card into place with the two hold-down screws.

8 Reconnect the two cooling unit alarm cables to the connectors on the face of the alarm card. Use a tie-wrap tool to reconnect the alarm leads to the E2A connector.

9 Replace the BIP front cover.

NTNY24
in a BIP (end)

10 The next action depends on the reason that you perform this procedure.

If a maintenance procedure	Do
directed you to this procedure	step 11
did not direct you to this procedure	step 12

11 Return to the maintenance procedure that directed you to this procedure. Continue as directed by the maintenance procedure.

12 Perform the “Returning a card for repair or replacement” procedure in this document and return to this step.

13 The procedure is complete.

NTNY25 in a BIP

Application

Use this procedure to replace the NTNY25 card in the NTNY17 breaker interface panel (BIP) identified in the table that follows.

PEC	Suffixes	Name
NTNY25	AA	Talk battery filter

If you cannot identify the PEC, suffix, and shelf or frame for the card you want to replace, refer to the “Index” in this document. The index lists the cards, shelves, and frames in this card replacement NTP.

Common procedures

This procedure refers to the “Returning a card for repair or replacement” common procedure.

Do not go to the common procedure unless the step-action procedure directs you to do so.

Next level of maintenance

Repeat this procedure if it is not successful when you first perform the procedure.

A problem can occur that requires the help of the local maintenance personnel. Gather all important logs, reports, and system information (that is, product type and current software load) for analysis. The related logs, maintenance notes, and system information help make sure that the next level of maintenance and support can find the problem. More detail about logs appears in the *Log Report Reference Manual*.

Action

The flowchart that follows provides a summary of this procedure. Use the instructions in the step action procedure that follows the flowchart to replace the card.

NTNY25
in a BIP (continued)

Summary of replacing an NTNY25 in a BIP

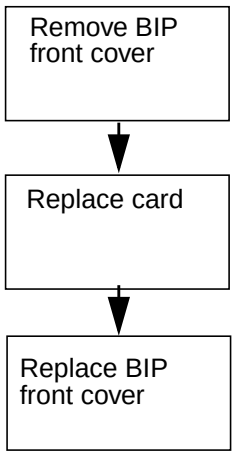

This flowchart summarizes the procedure.

Use the instructions that follow this flowchart to perform the procedure.

NTNY25
in a BIP (continued)

Replacing an NTNY25 in a BIP

At your current location

1 Proceed only if you have been directed to this card replacement procedure from a step in a maintenance procedure, are using the procedure for verifying or accepting cards, or have been directed to this procedure by your maintenance support group.

2 Obtain a replacement card. Verify that the replacement card has the same product equipment code (PEC), including suffix, as the card that is to be removed.

At the UEN frame

3 Remove the BIP front cover.

Note: The talk battery filter (TBF) card should always be engaged and disengaged from a powered up BIP for proper circuit reset and fast discharge of the talk battery filter card's capacitors.

4

WARNING
Static electricity damage
Wear a wrist strap that connects to the wrist-strap grounding point to handle cards. The wrist-strap grounding point is on the local craft access panel (LCAP). The wrist strap protects the cards against static electricity damage.

DANGER
Risk of electrical shock
To avoid possible shock hazard when removing the talk battery filter card, handle the card only by the faceplate. Risk of electrical shock is no longer present after 3 minutes, at which time the internal capacitor has fully discharged.

NTNY25
in a BIP (continued)

DANGER

Risk of equipment damage

Do not place the talk battery filter card on a conductive surface, as it contains a large capacitor that can discharge. Place the card on a nonconductive surface for 3 minutes until the capacitor has had a chance to fully discharge internally.

Do not reinsert the same card until it has had a chance to fully discharge, which takes approximately 3 minutes. Reinserting a card that has not fully discharged may cause voltage transients on the talk battery leads.

Loosen the hold-down screw on the faceplace of the talk battery filter card.

5 Hold the talk battery filter card by its faceplate and carefully remove the card from the BIP, as shown in the following figure. Do not place the card on a conductive surface.

Front view of BIP with talk battery card extended

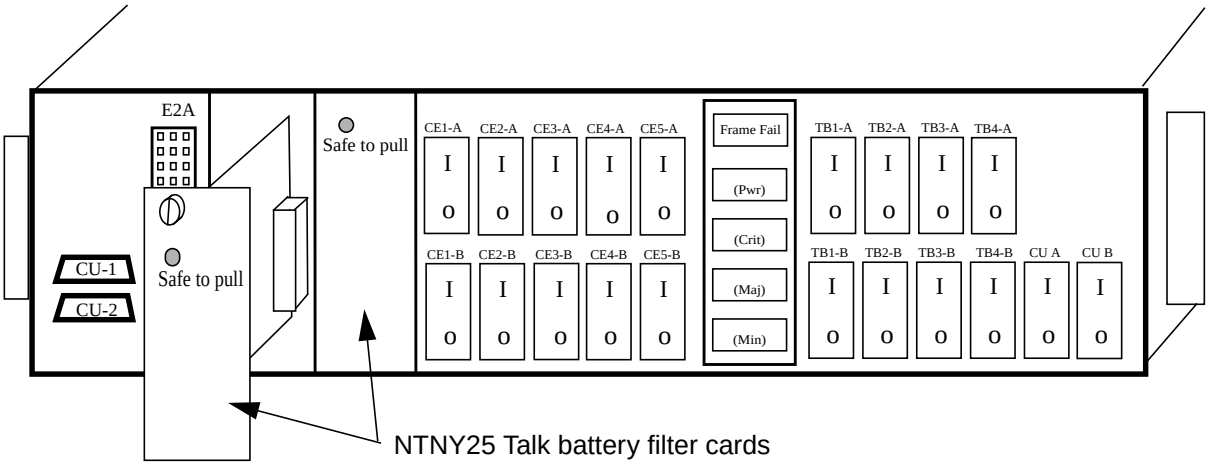

6 Insert a replacement talk battery filter card in the BIP and fasten the card into place with the hold-down screw.

7 Replace the BIP front cover.

8 The next action depends on the reason that you perform this procedure.

If a maintenance procedure	Do
directed you to this procedure	step 9
did not direct you to this procedure	step 10

NTNY25 in a BIP (end)

9 Return to the maintenance procedure that directed you to this procedure. Continue as directed by the maintenance procedure.

10 Perform the “Returning a card for repair or replacement” procedure in this document and return to this step.

11 The procedure is complete.

2 SuperNode computing module card replacement procedures

Introduction

This chapter provides card replacement procedures for the SuperNode computing module (CM). The first section in this chapter provides designs that show SuperNode CM shelf designs.

Card replacement procedures for the SuperNode SE CM appear in the chapter “SuperNode SE computing module and system load module card replacement procedures".

Card replacement procedures for the frame supervisory panel (FSP) and modular supervisory panel (MSP) are in the chapter “Frame supervisory panel and maintenance supervisory panel card replacement procedures".

Each procedure contains the following sections:

- Application
- Common procedures
- Action

Application

This section identifies the CM card(s) covered by the replacement procedure.

Common procedures

This section lists common procedures included in the CM card replacement procedure. A common procedure is a series of steps repeated within maintenance procedures. Common procedures include procedures like the steps for the removal and replacement of a card. Common procedures appear in the common procedures chapter in this NTP.

Do not go to the common procedure unless the step-action procedure directs you.

Action

This procedure contains a summary flowchart and a list of steps. Use the flowchart to review the procedure. Follow the steps to perform the procedure.

Recording card replacement activities

When you replace a card, record the following information in office records:

- the serial number of the card replaced
- the date you replaced the card
- the reason you replaced the card

SuperNode CM shelf layouts

Application

This procedure provides the following design diagrams:

- two-plane combined core cabinet (DPCC)
- SuperNode computing module (CM)

Dual-plane combined core cabinet

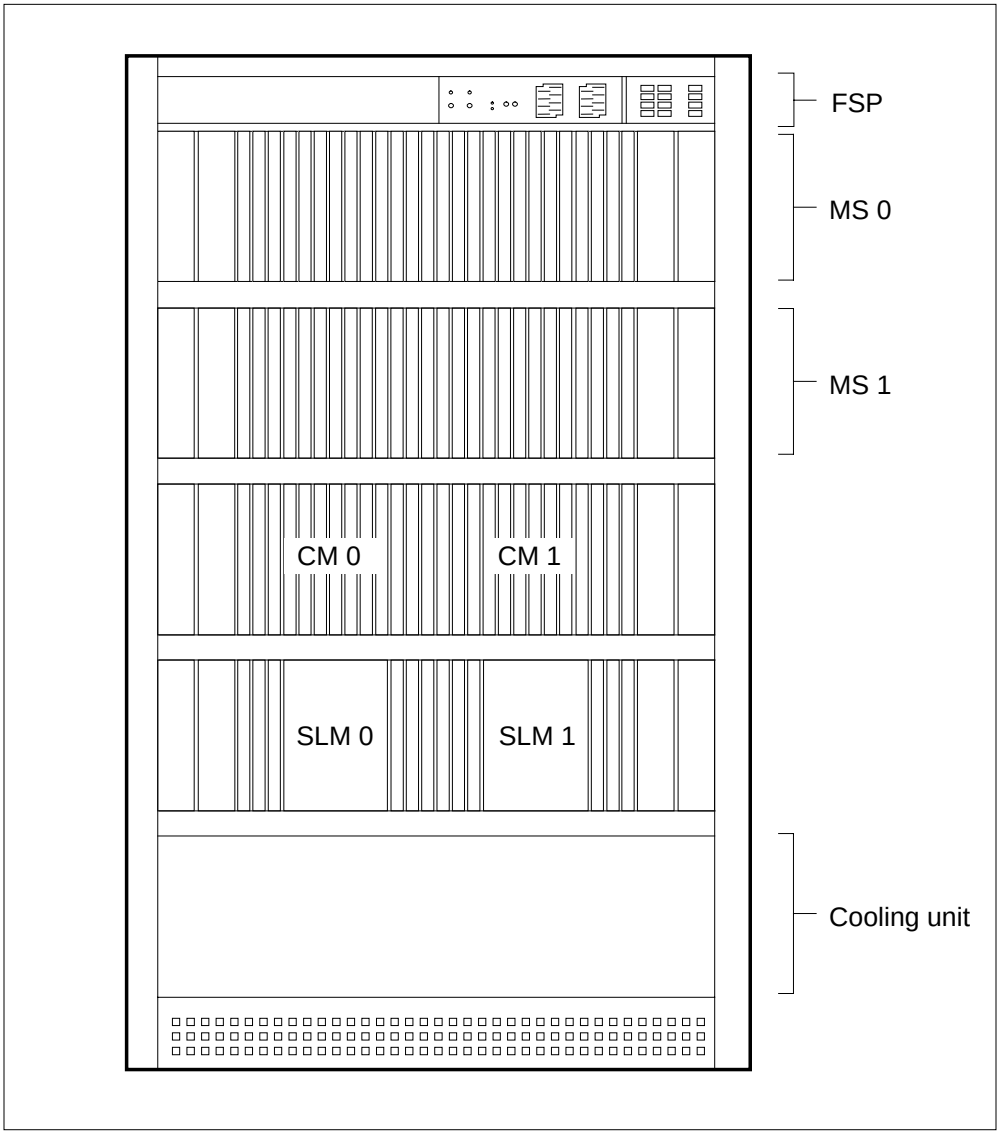

SuperNode CM shelf layouts (end)

SuperNode computing module

	Paddle boards		*Cards*		
			NT9X30	+5V 86-A power converter card	36F
			NT9X31	–5V 20-A power converter card	33F
32R	NT9X21	CM-bus terminator PB	NT9X14	Memory card	32F
31R	NT9X27AA	CM-bus extender PB	NT9X14	Memory card	31F
30R	NT9X19	Filler faceplate	NT9X14	Memory card	30F
29R	NT9X19	Filler faceplate	NT9X14	Memory card	29F
28R	NT9X19	Filler faceplate	NT9X14	Memory card	28F
27R	NT9X19	Filler faceplate	NT9X14	Memory card	27F
26R	NT9X19	Filler faceplate	NT9X14	Memory card	26F
25R	NT9X19	Filler faceplate	NT9X14	Memory card	25F
24R	NT9X19	Filler faceplate	NT9X14	Memory card	24F
23R	NT9X22	CM subsystem clock PB	NT9X14	Memory card	23F
22R	NT9X20	DS512 PB	NT9X12	CPU port card	22F
21R	NT9X20	DS512 PB	NT9X12	CPU port card	21F
20R	NT9X26	RTIF PB	NT9X10/NT9X13	CPU card	20F
19R	NT9X26	RTIF PB	NT9X10/NT9X13	CPU card	19F
18R	NT9X20	DS512 PB	NT9X12	CPU port card	18F
17R	NT9X20	DS512 PB	NT9X12	CPU port card	17F
16R	NT9X22	CM subsystem clock PB	NT9X14	Memory card	16F
15R	NT9X19	Filler faceplate	NT9X14	Memory card	15F
14R	NT9X19	Filler faceplate	NT9X14	Memory card	14F
13R	NT9X19	Filler faceplate	NT9X14	Memory card	13F
12R	NT9X19	Filler faceplate	NT9X14	Memory card	12F
11R	NT9X19	Filler faceplate	NT9X14	Memory card	11F
10R	NT9X19	Filler faceplate	NT9X14	Memory card	10F
09R	NT9X19	Filler faceplate	NT9X14	Memory card	09F
08R	NT9X27AA	CM-bus extender PB	NT9X14	Memory card	08F
07R	NT9X21	CM-bus terminator PB	NT9X14	Memory card	07F
			NT9X30	+5V 86-A power converter card	04F
			NT9X31	–5V 20-A power converter card	01F

Rear *Front*

NT9X20 in a SuperNode CM

Application

Use this procedure to replace a NT9X20 in a SuperNode computing module (CM), as listed in the following table.

PEC	Suffix	Card name	Shelf or frame name
NT9X20	AA	DS512 paddle board	CM
NT9X20	BB	DS512 interface CM-MS EN-MS paddle board	CM

Refer to the Index if you cannot identify the following features for the card you want to replace:

- the product engineering code (PEC)
- the PEC suffix
- the provisioned shelf or frame

The Index provides a list of the cards, shelves, and frames in this card replacement book.

Common procedures

This procedure refers to the following common procedures:

- *Verifying load compatibility of SuperNode cards*
- *Activity switch with memory match*
- *Switching the clock source*

Do not go to the common procedure unless the step-action procedure directs you to go.

Action

This procedure contains a summary flowchart and a list of steps. Use the flowchart to review the procedure. Follow the steps to perform the procedure.

NT9X20
in a SuperNode CM (continued)

Summary of replacing NT9X20 in a SuperNode CM

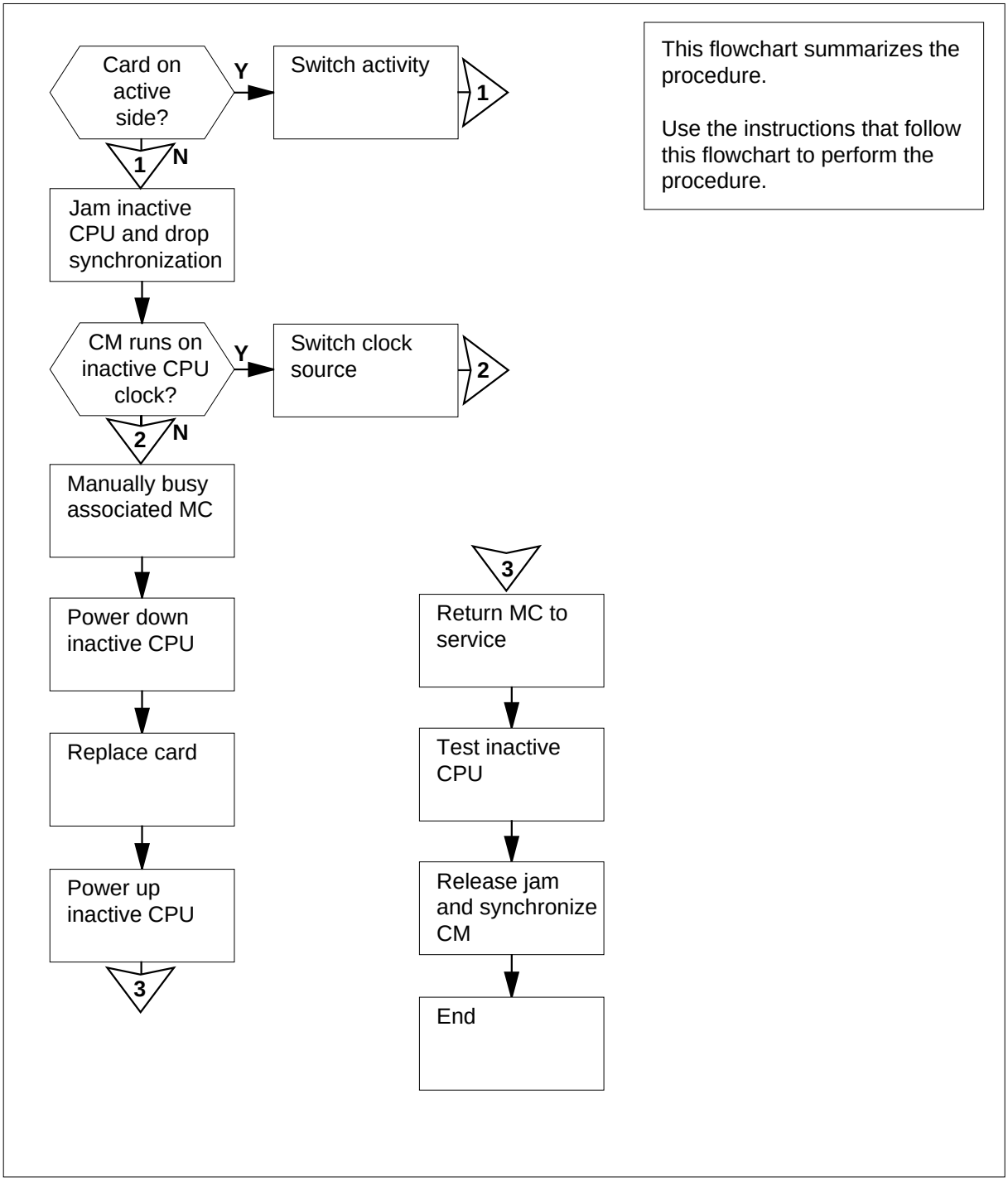

NT9X20
in a SuperNode CM (continued)

NT9X20 in a SuperNode CM

At the MAP terminal

1 Obtain a replacement card. Make sure that the replacement card has the same PEC and PEC suffix as the card you want to replace.

2 Perform the procedure *Verifying load compatibility of SuperNode cards* in this document. Complete the procedure and return to this point.

3 To access the CM level of the MAP display, type

`>MAPCI;MTC;CM`

and press the Enter key.

Example of a MAP display:

```
CM  Sync  Act  CPU0  CPU1 Jam Memory CMMnt  MC  PMC
 0   no  cpu 1   .     .  yes   .      .   mbsy  .
```

4 Determine if the card that you replace associates with the active CPU or the inactive CPU.

Note: The active CPU appears under the Act header on the MAP display. In the example in step 3, the active CPU is CPU 1

If the card	Do
associates with the inactive CPU	step 5
associates with the active CPU	step 12

5 Determine if the inactive CPU jammed.

Note: The word yes under the Jam header indicates that the inactive CPU jammed. A blank field indicates that the CPU is not jammed.

If the inactive CPU	Do
is not jammed	step 6
is jammed	step 8

NT9X20
in a SuperNode CM (continued)

At the CM reset terminal for the inactive CPU

6

> **DANGER**
> **Loss of service**
> Make sure that you do not jam the active CPU. If you jam the active CPU while the CM is not in sync, a cold restart occurs. The word Active on the top of the display identifies the reset terminal for the active CPU.

To jam the inactive CPU, type

>\JAM

and press the Enter key.

RTIF response:

```
Please confirm: (YES/NO)
```

7 To confirm the command, type

>YES

and press the Enter key.

RTIF response:

```
JAM DONE
```

At the MAP terminal

8 Determine if the CM is synchronized.

Note: A dot (.) or EccOn under the Sync header indicates that the CM is synchronized. The word NO means that the CM is not synchronized.

If the CM	Do
is synchronized	step 9
is not synchronized	step 13

9 To drop synchronization, type

>DPSYNC

and press the Enter key.

If the response	Do
is About to drop sync with CPU n active. The inactive CPU is JAMMED. Do you want to continue? Please confirm ("YES", "Y", "NO", or "N"):	step 10
is other than listed here	step 42

10 To confirm the command, type

>YES

and press the Enter key.

Example of a MAP response:

```
Maintenance action submitted.
Running in simplex mode with active CPU n.
```

At the CM reset terminal for the inactive CPU

11 Wait until A1 flashes on the reset terminal for the inactive CPU.

Note: Allow 5-min for A1 to begin to flash.

If A1	Do
flashes	step 13
does not flash	step 42

12 Perform the procedure *Activity switch with memory match* in this document. Complete the procedure and return to this point.

NT9X20
in a SuperNode CM (continued)

At the MAP terminal

13

> **WARNING**
> **Loss of service**
> Make sure that the CM runs on the clock of the inactive CPU. A cold restart or a system image reload can occur if you power down the inactive side of the CM. Do not power down the inactive side of the CM while the CM runs on the clock of the inactive CPU.

To determine if the CM runs on the clock of the inactive CPU, type

`>INSYNC`

and press the Enter key.

Example of a MAP response:

```
CPU pair is NOT insync, CPU 0 is active.
CM is running on active CPU clock.

Memory Error Correction is ENABLED.

The Inactive CPU is Jammed.
```

If the CM	Do
runs on the clock of the inactive CPU	step 14
runs on the clock of the active CPU	step 15

14 To run the CM on the clock of the active CPU, perform the procedure *Switching the clock source*. This procedure is in this document. Complete the procedure and return to this point.

15 To access the MC level of the MAP display, type

`>MC`

and press the Enter key.

Example of a MAP display:

```
MC 0    MC 1
mbsy      .
```

NT9X20
in a SuperNode CM (continued)

16 Determine the state of the message controller (MC) on the inactive CPU.

Note: The word mbsy under the MC header means that the MC is manually busy.

If the state of the MC	Do
is `mbsy`	step 18
is not `mbsy`	step 17

17

WARNING
Loss of service
Make sure that you busy the MC that corresponds to the inactive CPU. A warm restart occurs if you power down the plane with the wrong MC busied.

To manually busy the MC, type

`>BSY mc_number`

and press the Enter key.

where

mc_number
is the number of the MC on the inactive side (0 or 1)

Example of a MAP response:

```
Maintenance action submitted.
MC busied OK.
```

If the MC	Do
busied	step 18
did not busy	step 42

NT9X20
in a SuperNode CM (continued)

At the CM shelf

18

> **WARNING**
> **Static electricity damage**
> Wear a wrist strap that connects to the wrist-strap grounding point to handle circuit cards. The wrist strap grounding point is on a frame supervisory panel (FSP) or modular supervisory panel (MSP). The wrist strap protects the cards against static electricity damage.

Power down the inactive CPU as follows:

a Press down and release the power switch on the faceplate of the NT9X30 power converter on the inactive side of the CM shelf.

> ***Note:*** For CPU 0, the power converter is in slots 4F through 6F. For CPU 1, the power converter is in slots 36F through 38F.

b Press down and release the power switch on the faceplate of the NT9X31 power converter on the inactive side of the CM shelf.

> ***Note:*** For CPU 0, the power converter is in slots 1F through 3F. For CPU 1, the power converter is in slots 33F through 35F.

19 Locate the card on the shelf.

20

> **DANGER**
> **Do not hold card by levers only**
> If you hold a card only by the levers, you can break the levers. When you pull the card half way out of the shelf, carefully grasp the card from below. Provide support while you continue to remove the card from the shelf. Make sure you do not touch any wires or internal parts on the card.

Open the locking levers on the card that you want to replace.

NT9X20
in a SuperNode CM (continued)

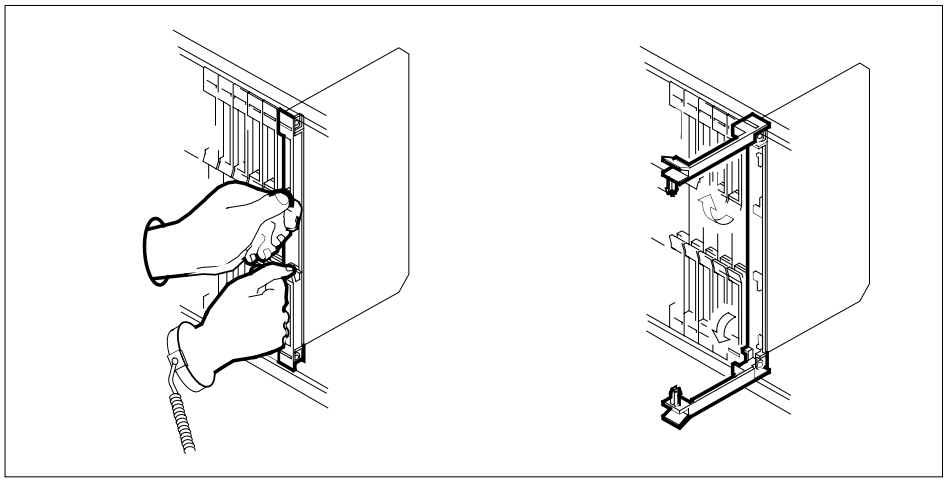

21

DANGER
Damage to fiber cables
When you handle fiber cables, make sure you do not crimp or bend fiber cables to a radius of less than 25 mm (1 in.).

Label each fiber cable. Use Transmit for the top cable and Receive for the bottom cable.

22 Disconnect the fiber cables from the faceplate of the card as follows:

a Loosen the fiber connections, with the locking levers open.

b Carefully push in and turn the fiber cable connector counter clockwise one half turn until the connector slides from its receptacle.

Note: Refer to the figure on the next page.

NT9X20
in a SuperNode CM (continued)

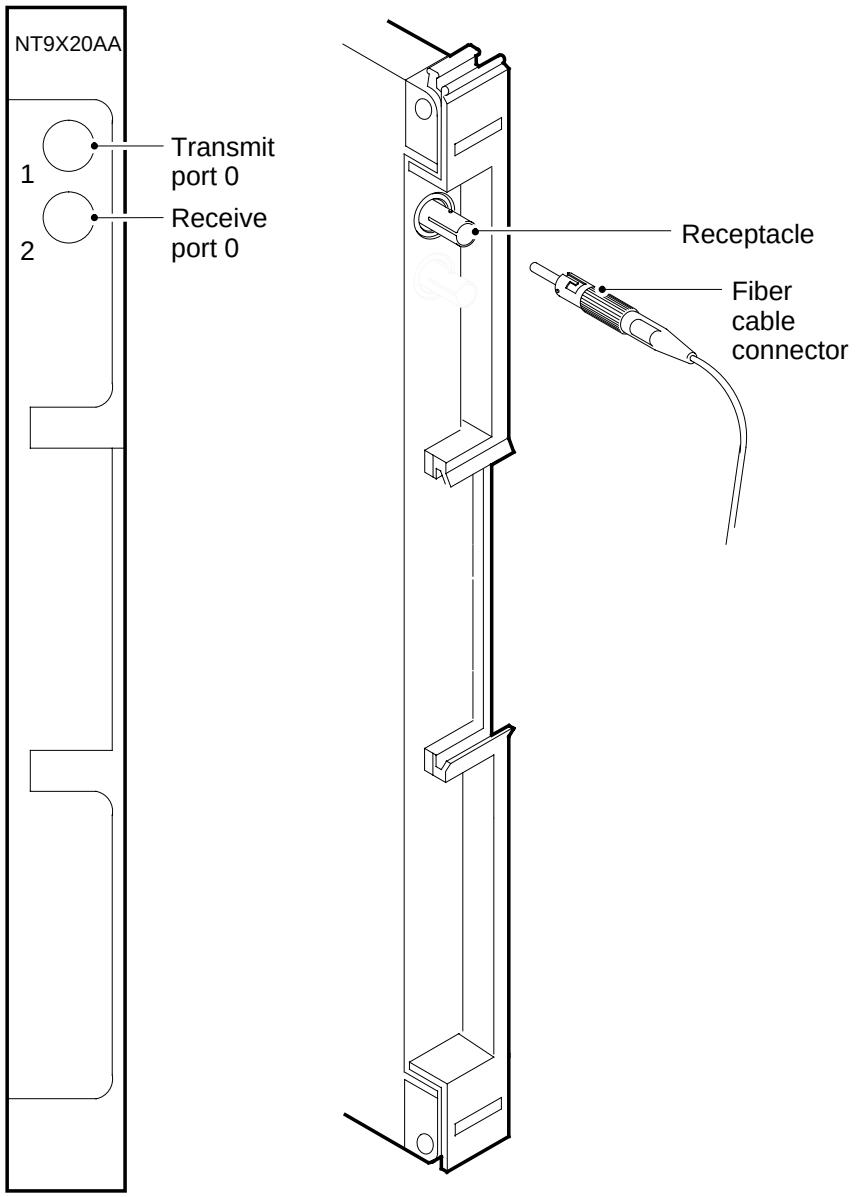

23 While you grasp the locking levers, carefully pull the card toward you until the card protrudes 2 in. (5.1 cm) from the equipment shelf.

NT9X20
in a SuperNode CM (continued)

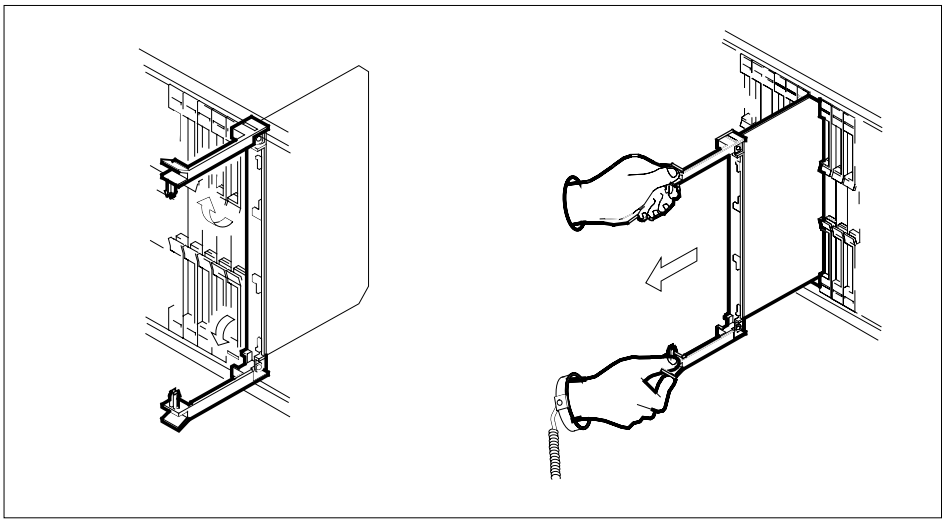

24 Hold the card by the face plate with one hand while you support the card from below with the other hand. Carefully pull the card toward you until the card clears the shelf.

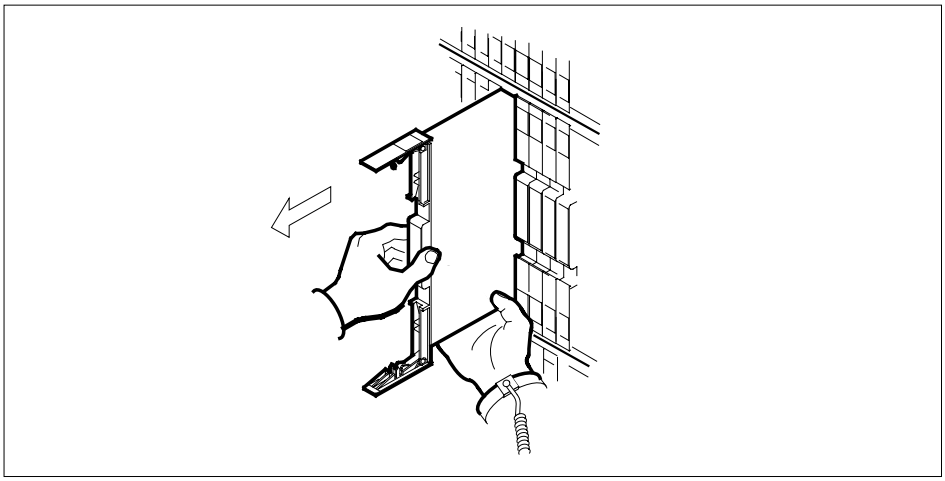

25 Place the card you removed in an electrostatic discharge (ESD) protective container.

26 Make sure that the replacement card has the same PEC, including PEC suffix, as the card you removed.

27 Insert the replacement card into the shelf.

- **a** Open the locking levers on the card.
- **b** Hold the card by the face plate with one hand while you support the card from below with the other hand. Carefully slide the card into the shelf.

NT9X20
in a SuperNode CM (continued)

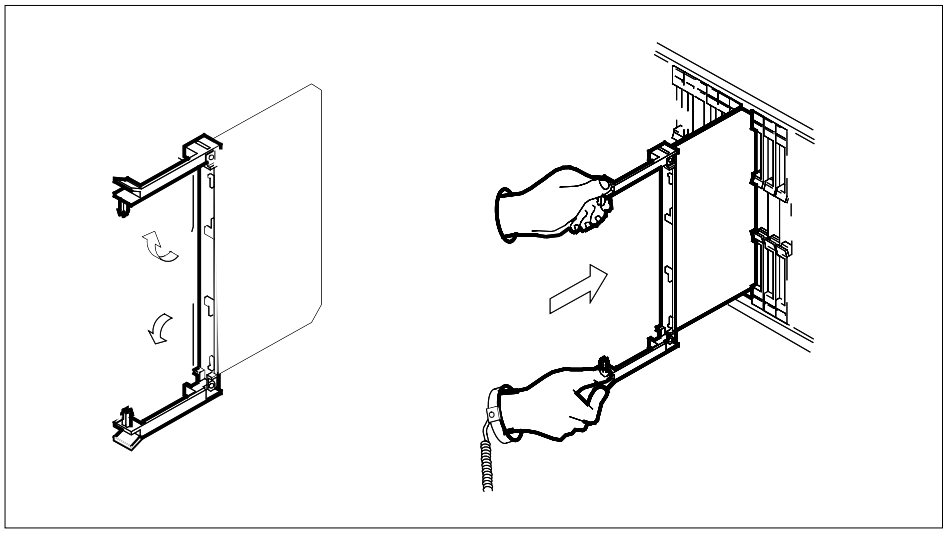

28

DANGER
Damage to fiber cables
When you handle fiber cables, do not crimp or bend fiber cables to a radius of less than 25 mm (1 in.).

Reconnect the fiber cables as follows:

a Tighten the cable connections, with the locking levers open.

b Carefully guide the cable connector into the receptacle notches of the connector.

c Push in and turn the cable connector clockwise half a turn until the connection is tight.

29 Seat and lock the card.

a Use your fingers or thumbs to push on the upper and lower edges of the faceplate. Make sure that the card sits completely in the shelf.

b Close the locking levers to secure the card.

NT9X20
in a SuperNode CM (continued)

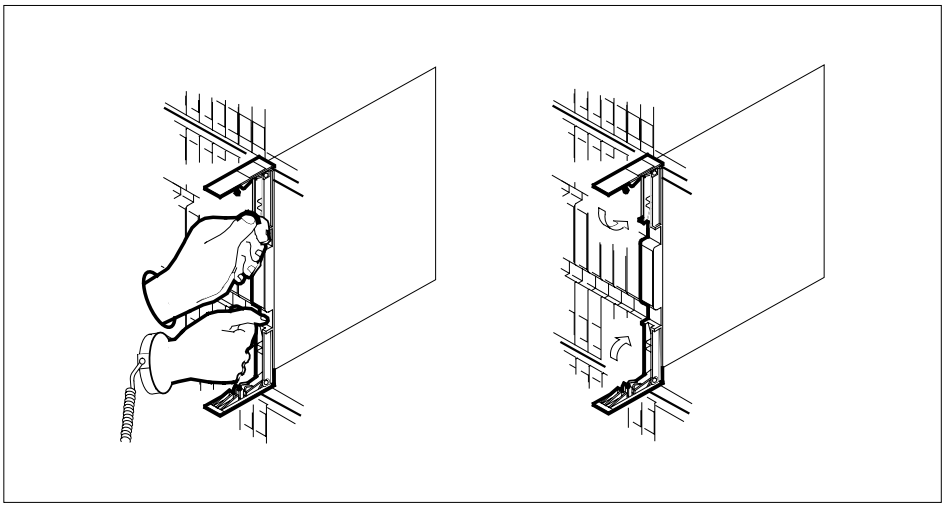

30 Power up the inactive CPU as follows:

a Lift and release the power switch on the faceplate of the NT9X30 power converter on the inactive side of the CM shelf.

Note: For CPU 0, the power converter is in slots 4F through 6F. For CPU 1, the power converter is in slots 36F through 38F.

b Lift and release the power switch on the faceplate of the NT9X31 power converter on the inactive side of the CM shelf.

Note: For CPU 0, the power converter is in slots 1F through 3F. For CPU 1, the power converter is in slots 33F through 35F.

At the CM reset terminal for the inactive CPU

31

WARNING
Firmware tests must be completed
If firmware tests are not completed, the CPUs cannot synchronize.

Wait for the switch to complete firmware tests.

Example of an RTIF response:

NT9X20
in a SuperNode CM (continued)

```
Shelf      Slot
00         12          NT9X14DB...
00         13          NT9X14DB...
Waiting for activity...
```

Note: When firmware testing is in progress, dots appear on the right side of the PEC. The PEC is in the firmware testing status line of the RTIF response. As you complete each firmware test, another dot appears until firmware testing for the card is complete. When the firmware test sequence stops, the dots do not appear. The display does not show another firmware testing status line or the prompt Waiting for activity when the firmware test sequence stops.

32 Determine if the firmware tests are complete.

Note: If the firmware tests are complete and the CPU powered up, the display shows the message Waiting for activity.

If the inactive CPU	Do
powered up	step 33
did not power up	step 42

At the MAP terminal

33 Your next step depends on the reason for performing this procedure.

If you	Do
perform this procedure as a result of an MC Tbl alarm	step 37
perform this procedure as a result of a PMCFlt alarm	step 37
perform this procedure as a result of a PMCTbl alarm	step 37
perform this procedure as a result of a NoTOD alarm	step 37
perform this procedure as a result of an SBsyMC alarm	step 37
perform this procedure as a result of an MBsyMC alarm	step 37
perform this procedure as a result of a CBsyMC alarm	step 37
perform this procedure for any reason other than listed here	step 34

NT9X20
in a SuperNode CM (continued)

34 To access the MC level of the MAP display, type

>MC

and press the Enter key.

35 To return the manual busy MC to service, type

>RTS mc_number

and press the Enter key.

where

mc_number
is the number of the manual-busy MC (0 or 1)

Example of a MAP response:

```
Maintenance action submitted.
MC RTS OK.
```

If the RTS command	Do
passed	step 36
failed	step 42

36 The next action depends on the reason for performing this procedure.

If you	Do
perform this procedure as a result of a CM alarm clearing procedure	step 37
perform this procedure for any reason other than listed here	step 38

37 Return to the alarm clearing procedure that directed you to this procedure and continue as directed.

38 To test the inactive CPU, type

>CM;TST

and press the Enter key.

Example of a MAP response:

NT9X20
in a SuperNode CM (continued)

```
The test(s) listed below will destroy
the software load in inactive CPU:

    Static RAM test

Do you want to do the test(s) anyway?
Please confirm: ("YES", "Y", "NO", or "N"):
```

39 To confirm the command, type

>YES

and press the Enter key.

Example of a MAP response:

```
Maintenance action submitted.
Test passed.
```

If the TST command	Do
passed	step 40
is other than listed here	step 42

At the CM reset terminal for the inactive CPU

40 To release the jam on the inactive CPU, type

>\RELEASE JAM

and press the Enter key.

RTIF response:

```
JAM RELEASE DONE
```

At the MAP terminal

41 To synchronize the CM, type

>SYNC

and press the Enter key.

Example of a MAP response:

NT9X20
in a SuperNode CM (end)

```
Maintenance action submitted.
Synchronization successful.
```

If the response	Do
indicates the SYNC command was successful	step 43
is other than listed here	step 42

42 For additional help, contact the next level of support.

43 The procedure is complete.

System cards in a SuperNode CM

Application

Use this procedure to replace the following cards in a SuperNode computing module (CM).

If you cannot identify the product engineering code (PEC), PEC suffix, or shelf or frame for the card to replace, refer to the "Index". The "Index" provides a list of the cards, shelves, and frames in this card replacement book.

(Sheet 1 of 2)

PEC	Suffix	Card name	Shelf or frame name
NT9X10	AA	33-MHz 88100 BRISC CPU card	CM
NT9X10	BA, CA	60-MHz 88110 BRISC CPU card	CM
NT9X10	DA	66-MHz 88110 BRISC CPU card	CM
NT9X12	AB, AC, AD	CPU port card	CM
NT9X13	BB, BC, BD	CPU processor card	CM
NT9X13	DB, DC	CPU 20-MHz card	CM
NT9X13	GA	DMS-core 33-MHz 68030 HPM-based CPU card	CM
NT9X13	HB	CPU (68030) 40-MHz card	CM
NT9X13	JA	CPU (68020) processor card	CM
NT9X14	BB	6-Mbyte memory card	CM
NT9X14	DB	24-Mbyte memory card	CM
NT9X14	EA, FA	96-Mbyte memory card	CM
NT9X21	AA	CM bus terminator paddle board	CM
NT9X21	AB	Bus terminator paddle board	CM
NT9X22	CA	CM subsystem clock paddle board	CM
NT9X26	AA, AB	Remote terminal interface paddle board	CM

System cards in a SuperNode CM (continued)

(Sheet 2 of 2)

PEC	Suffix	Card name	Shelf or frame name
NT9X26	DA, DB, DC, EA, FA, GA	BRISC RTIF paddle board	CM
NT9X27	AA, BA	CM bus extender paddle board	CM
NT9X30	AA, AC	+5V 86-A power converter	CM
NT9X31	AA, AB	-5V 20-A power converter	CM

Common procedures

This procedure refers to the following common procedures:

- *Verifying load compatibility of SuperNode cards*
- *Activity switch with memory match*
- *Switching the clock source*
- *Replacing a card*

Do not go to the common procedure unless the step-action procedure directs you.

Action

This procedure contains a summary flowchart and a list of steps. Use the flowchart to review the procedure. Follow the steps to perform the procedure.

System cards in a SuperNode CM (continued)

Summary of replacing System cards in a SuperNode CM

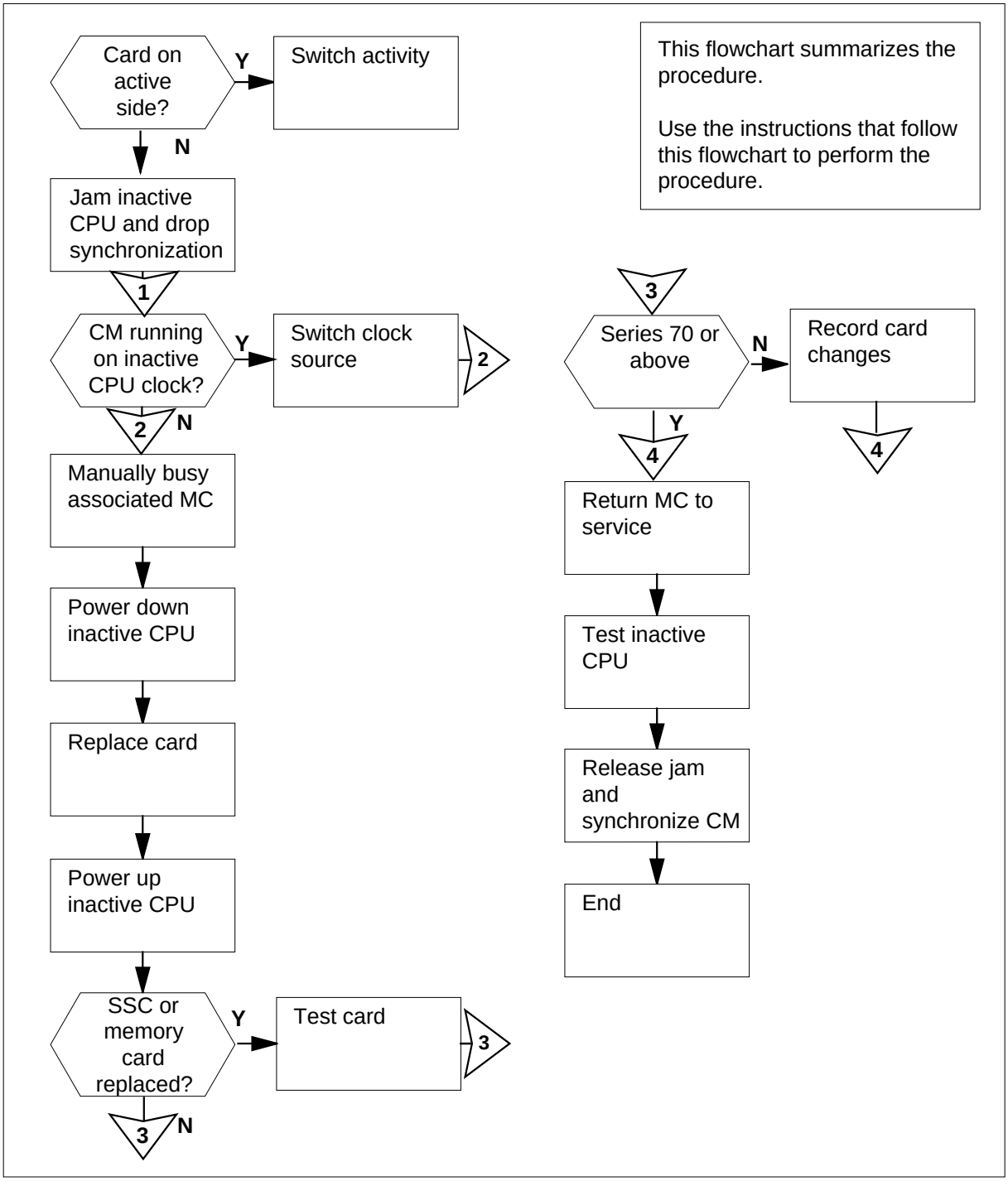

System cards in a SuperNode CM (continued)

Replacing System cards in a SuperNode CM

DANGER
Possible invalid memory configuration
Do not leave empty slots between memory cards or between the first memory card and a dual-port message controller card. Empty slots can cause an invalid memory configuration.

DANGER
Possible invalid memory configuration
Contact your next level of support if you replace an NT9X14DB card with an NT9X14EA card. This replacement can cause an invalid memory configuration.

DANGER
Possible invalid memory configuration
The NT9X10DA processor card, the NT9X26GA RTIF card, and the optional NT9X14FA memory card are designed to be used together. The NT9X10DA CPU card functions only with the NT9X26GA RTIF paddle board and the optional NT9X14FA extended memory card. Do not combine an NT9X14FA card with any other memory card. This results in an invalid memory configuration. Do not use the NT9X14FA memory card with any processor other than the NT9X10DA processor card.

At your current location

1 Obtain a replacement card. Make sure that the replacement card and the card to remove have the same product engineering code (PEC) and PEC suffix.

2 Perform the procedure *Verifying load compatibility of SuperNode cards*. Complete the procedure and return to this point.

System cards in a SuperNode CM (continued)

At the MAP terminal

3 To access the CM level of the MAP display, type

>MAPCI;MTC;CM

and press the Enter key.

Example of a MAP display:

```
CM  Sync  Act  CPU0  CPU1 Jam Memory CMMnt  MC  PMC
 0   no  cpu 1   .     .  yes   .      .   mbsy  .
```

4 Determine if the card you replace associates with the active CPU or the inactive CPU.

Note: The active CPU appears under the Act header on the MAP display. In the example in step 3, the active CPU is CPU 1.

If the card	Do
associates with the inactive CPU	step 5
associates with the active CPU	step 12

5 Determine if the inactive CPU has a jam.

Note: The word yes under the Jam header means that the inactive CPU has a jam. The area remains blank if the CPU does not have a jam.

If the inactive CPU	Do
is not jammed	step 6
is jammed	step 8

At the CM reset terminal for the inactive CPU

6

DANGER
Loss of service
Make sure that you do not jam the active CPU. If you jam the active CPU while the CM is not in sync, a cold restart occurs. The word Active on the top banner of the display identifies the reset terminal for the active CPU.

To jam the inactive CPU, type

>\JAM

and press the Enter key.

RTIF response:

System cards in a SuperNode CM (continued)

```
Please confirm: (YES/NO)
```

7 To confirm the command, type

>YES

and press the Enter key.

RTIF response:

```
JAM DONE
```

At the MAP terminal

8 Determine if the CM is synchronized.

Note: A dot (.) or EccOn under the Sync header means that the CM is synchronized. The word no means that the CM is not synchronized.

If the CM	Do
is synchronized	step 9
is not synchronized	step 13

9 To drop synchronization, type

>DPSYNC

and press the Enter key.

If the response	Do
is About to drop sync with CPU n active. The inactive CPU is JAMMED. Do you want to continue? Please confirm ("YES", "Y", "NO", or "N"):	step 10
is other than listed here	step 44

10 To confirm the command, type

>YES

and press the Enter key.

Example of a MAP response:

```
Maintenance action submitted.
Running in simplex mode with active CPU n.
```

System cards in a SuperNode CM (continued)

At the CM reset terminal for the inactive CPU

11 Wait until A1 flashes on the reset terminal for the inactive CPU.

Note: Allow 5 min for A1 to begin to flash.

If A1	Do
flashes	step 13
does not flash	step 44

12 Perform the procedure *Activity switch with memory match* in this document. Complete the procedure and return to this point.

At the MAP terminal

13

WARNING
Loss of service
Make sure that the CM runs on the clock of the active CPU. A cold restart or a system image reload can occur if you power down the inactive side of the CM. Do not power down the inactive side of the CM while the CM runs on the clock of the inactive CPU.

To determine if the CM runs on the clock of the inactive CPU, type

`>INSYNC`

and press the Enter key.

Example of a MAP response:

```
CPU pair is NOT insync, CPU 0 is active.
CM is running on active CPU clock.

Memory Error Correction is ENABLED.

The Inactive CPU is Jammed.
```

If the CM	Do
runs on the clock of the inactive CPU	step 14
runs on the clock of the active CPU	step 15

System cards in a SuperNode CM (continued)

14 To run the CM on the clock of the active CPU, perform the procedure *Switching the clock source* in this document. Complete the procedure and return to this point.

15 To access the MC level of the MAP display, type

>MC

and press the Enter key.

Example of a MAP display:

```
MC 0    MC 1
mbsy      .
```

16 Determine the state of the message controller (MC) on the inactive CPU.

Note: The word mbsy under the MC header means that the MC is manual busy.

If the state of the MC	Do
is `mbsy`	step 18
is not `mbsy`	step 17

17

WARNING
Loss of service
Make sure that you busy the MC that corresponds to the inactive CPU. A warm restart occurs if you power down the surface with the wrong MC busy.

To manually busy the MC that associates with the inactive CPU, type

>BSY mc_number

and press the Enter key.

where

mc_number
is the number of the MC on the inactive side (0 or 1)

Example of a MAP response:

```
Maintenance action submitted.
MC busied OK.
```

If the MC	Do
busied	step 18

System cards in a SuperNode CM (continued)

If the MC	Do
did not busy	step 44

18 The next action depends on the type of card you replace.

If the card being replaced	Do
is an NT9X22	step 19
is other than listed here	step 21

19 To access the Clock level of the MAP display, type

>CLOCK

and press the Enter key.

Example of a MAP display:

```
         TOD
        MC0   MC1
Link 0    .     .
Link 1    .     .
   SSC    f     .
```

20 To determine the location of the NT9X22 card, type

>LOCATE ssc_number

and press the Enter key.

where

ssc_number
is the number of the subsystem clock (0 or 1)

Example of a MAP response:

```
Site Flr    RPos  Bay_id Shf Description Slot EqPEC
HOST 00     A00   CMDC:00 18  SSC:00:0:0  16  9X22CA BACK
```

System cards in a SuperNode CM (continued)

At the CM shelf

21

WARNING
Static electricity damage
Wear a wrist strap that connects to the wrist-strap grounding point of a frame supervisory panel (FSP) to handle cards. The wrist strap protects the cards against static electricity damage.

Power down the inactive CPU as follows:

a Press down and release the power switch on the faceplate of the NT9X30 power converter on the inactive side of the CM shelf.

Note: For CPU 0, the power converter is in slots 4F through 6F. For CPU 1, the power converter is in slots 36F through 38F.

b Press down and release the power switch on the faceplate of the NT9X31 power converter on the inactive side of the CM shelf.

Note: For CPU 0, the power converter is in slots 1F through 3F. For CPU 1, the power converter is in slots 33F through 35F.

22 Perform the procedure *Replacing a card* in this document. Complete the procedure and return to this point.

23 Power up the inactive CPU, as follows:

a Lift and release the power switch on the faceplate of the NT9X30 power converter on the inactive side of the CM shelf.

Note: For CPU 0, the power converter is in slots 4F through 6F. For CPU 1, the power converter is in slots 36F through 38F.

b Lift and release the power switch on the faceplate of the NT9X31 power converter on the inactive side of the CM shelf.

Note: For CPU 0, the power converter is in slots 1F through 3F. For CPU 1, the power converter is in slots 33F through 35F.

System cards in a SuperNode CM (continued)

At the CM reset terminal for the inactive CPU

24

> **CAUTION**
> **Firmware tests must be completed**
> If you do not complete the firmware tests, you can not synchronize the CPUs.

Wait for the switch to complete firmware tests.

Example of an RTIF response:

```
Shelf      Slot
00         12          NT9X14DB...
00         13          NT9X14DB...
Waiting for activity...
```

Note: When firmware testing is in progress, dots appear on the right side of the PEC. The PEC is in the firmware testing status line of the RTIF response. As each firmware test is complete, another dot appears, until firmware testing for the card is complete. If the dots do not appear and another firmware testing status line does not appear, firmware tests do not progress. If the dots do not appear and the prompt Waiting for activity does not appear, firmware tests do not progress.

25 Determine if the firmware tests were completed.

Note: If the firmware tests are complete and CPU has powered up, the display shows the Waiting for activity message.

If the inactive CPU	Do
powered up	step 26
did not power up	step 44

26 The next action depends on the type of card you replace.

If the card being replaced	Do
is an NT9X14	step 29
is an NT9X22	step 27
is an NT9X26	step 31
is other than listed here	step 32

System cards in a SuperNode CM (continued)

At the MAP terminal

27 To test the subsystem clock, type

>TST SSC ssc_number

and press the Enter key.

where

ssc_number
is the number of the subsystem clock (0 or 1)

Example of a MAP response:

```
A complete test will include temporary loss of two links.
Please confirm ("YES", "Y", "NO", or "N"):
```

28 To confirm the command, type

>YES

and press the Enter key.

Example of a MAP response:

```
Maintenance action submitted.
SSC 0 test passed. No faults detected by hardware.
```

If the TST command	Do
passed	step 32
failed	step 44

At the MAP terminal

29 To access the Memory level of the MAP display, type

>MEMORY

and press the Enter key.

Example of a MAP display:

```
CM 0   Plane 0 | Plane 1
               |
  0987654321  P|P  1234567890
  ----......       ......----
```

30 To test the replacement card, type

>TST CARD card_number

and press the Enter key.

where

card_number
is the number of the replaced memory card (1 to 10).

System cards in a SuperNode CM (continued)

Example of a MAP response:

```
Maintenance action submitted.
Memory test OK.
```

If the TST command	Do
passed	step 32
failed	step 44

At the CM reset terminal for the inactive CPU

31 To determine the result of the last self-test, type

>\SELF TEST

and press the Enter key.

Example of a MAP response:

```
SELF TEST RESULTS: ROM OK  RAM OK  9X26 OK
```

If the self test	Do
passed	step 32
failed	step 44

32 Your next step depends on the reason for the performance of this procedure.

If you	Do
perform this procedure as a result of an MC Tbl alarm	step 46
perform this procedure as a result of a PMCFlt alarm	step 46
perform this procedure as a result of a PMCTbl alarm	step 46
perform this procedure as a result of a NoTOD alarm	step 46
perform this procedure as a result of an SBsyMC alarm	step 46
perform this procedure as a result of an MBsyMC alarm	step 46
perform this procedure as a result of a CBsyMC alarm	step 46

System cards in a SuperNode CM (continued)

If you	Do
perform this procedure for any reason different from those listed here	step 33

33 The next action depends on the series of your SuperNode CM hardware.

If	Do
below Series 70 SuperNode CM hardware	step 34
Series 70 or above	step 36

34 To record all the card changes in the history database for each card, type

`>SWAPHW shelf_no slot_no side_no`

and press the Enter key.

where

shelf_no
is the number of the shelf (0 or1)

slot_no
is the number of the slot (1 to 38)

side_no
is the side of the CM (front or back)

Example of a MAP response:

```
WARNING: You have indicated that the following circuit pack has been
replaced.  Please verify that this accurately reflects which circuit pack has
been changed, and that the displayed PEC code matches what is currently
equipped in that slot:

Site  Flr  RPOs  Shf  Description  Slot  EQPEC
HOST  00      A00   DPCC 0  18  CM 0;0;0  19  9X13BC

Do you wish to continue?
Please   confirm (“YES", “Y", “NO" “N") “Y" or “YES",
Card replacement has been  recorded.
```

If the response	Do
`is Card replacement has been recorded.`	step 36
`is Aborted.  Card replacement has NOT been recorded.`	step 35

System cards in a SuperNode CM (continued)

If the response	Do
is different from those listed here	step 44

Note: The specified card joins the list of the cards that you replaced. The actual updates to the mismatch history database do not occur until the next manual SYNC attempt.

35 Enter the SWAPHW command as you did in step 34. If the command aborts a second time, contact the next level of support.

36 To access the MC level of the MAP display, type

>MC

and press the Enter key.

37 To return the manual busy MC to service, type

>RTS mc_number

and press the Enter key.

where

mc_number
is the number of the manual-busy MC (0 or 1)

Example of a MAP response:

```
Maintenance action submitted.
MC RTS OK.
```

38 The next action depends on the reason for performing this procedure.

If	Do
a CM alarm clearing procedure	step 42
anything else	step 39

39 Test the inactive CPU by typing

>CM;TST

and pressing the Enter key.

Example of a MAP response:

```
The test(s) listed below will destroy
the software load in inactive CPU:

    Static RAM test

Do you want to do the test(s) anyway?
Please confirm: (”YES”, ”Y”, ”NO”, or ”N”):
```

System cards in a SuperNode CM (continued)

40 Confirm the command by typing

>YES

and pressing the Enter key.

Example of a MAP response:

```
The PCCAB DRAM test will take
up to 10 minutes to run.

Do you wish to run this test anyway?
Please confirm: (”YES”, ”Y”, ”NO”, or ”N”):
>YES
```

41 Confirm the command by typing

>YES

and pressing the Enter key.

Example of a MAP response:

```
Maintenance action submitted.
Test passed.
```

If the TST command	Do
passed	step 42
anything else	step 44

At the CM reset terminal for the inactive CPU

42 Release the jam on the inactive CPU by typing

>\RELEASE JAM

and pressing the Enter key.

RTIF response:

```
JAM RELEASE DONE
```

At the MAP terminal

43 Synchronize the CM by typing

>SYNC

and pressing the Enter key.

Example of a MAP response:

System cards in a SuperNode CM (end)

```
Maintenance action submitted.
Synchronization successful.
```

If	Do
the SYNC command was successful	step 45
anything else	step 44

44 For additional help, contact the next level of support.

45 The next action depends on the reason for performance of this procedure.

If	Do
a CM alarm clearing procedure	step 46
anything else	step 47

46 Return to the alarm clearing procedure that sent you to this procedure and continue as directed.

47 You have completed the procedure.

3 SuperNode SE computing module and system load module card replacement procedures

Introduction

This chapter provides card replacement procedures for the SuperNode SE computing module (CM) and system load module (SLM). The first section in the chapter provides diagrams of SuperNode SE CM/SLM shelf designs.

Card replacement procedures for the SuperNode CM are in the chapter “SuperNode computing module card replacement procedures".

Card replacement procedures for the SuperNode SLM are in the chapter “SuperNode system load module card replacement procedures".

Card replacement procedures for the frame supervisory panel (FSP) and modular supervisory panel (MSP) are in the chapter “Frame supervisory panel and maintenance supervisory panel card replacement procedures".

Each procedure contains the following sections:

- Application
- Common procedures
- Action

Application

This section identifies the CM and SLM card(s) discussed in the replacement procedure.

Common procedures

This section lists common procedures for the replacement of a CM or SLM card. A common procedure is a series of steps that repeats within maintenance procedures. For example, a card removal and replacement procedure is a common procedure. Common procedures are in the common procedures chapter in this NTP.

Do not use common procedures unless the step-action procedure directs you.

Action

This section contains a summary flowchart and a list of steps. Use the flowchart to review the procedure. Follow the steps to perform the procedure.

Recording card replacement activities

When you replace a card, record the following information in office records:

- the serial number of the card that you replaced
- the date of the card replacement
- the reason that you replaced the card

SuperNode SE CM/SLM shelf layouts

Application

This procedure provides the following design diagrams:

- single core cabinet (SCC)
- SuperNode SE computing module/system load module (CM/SLM)

Figure Single core cabinet

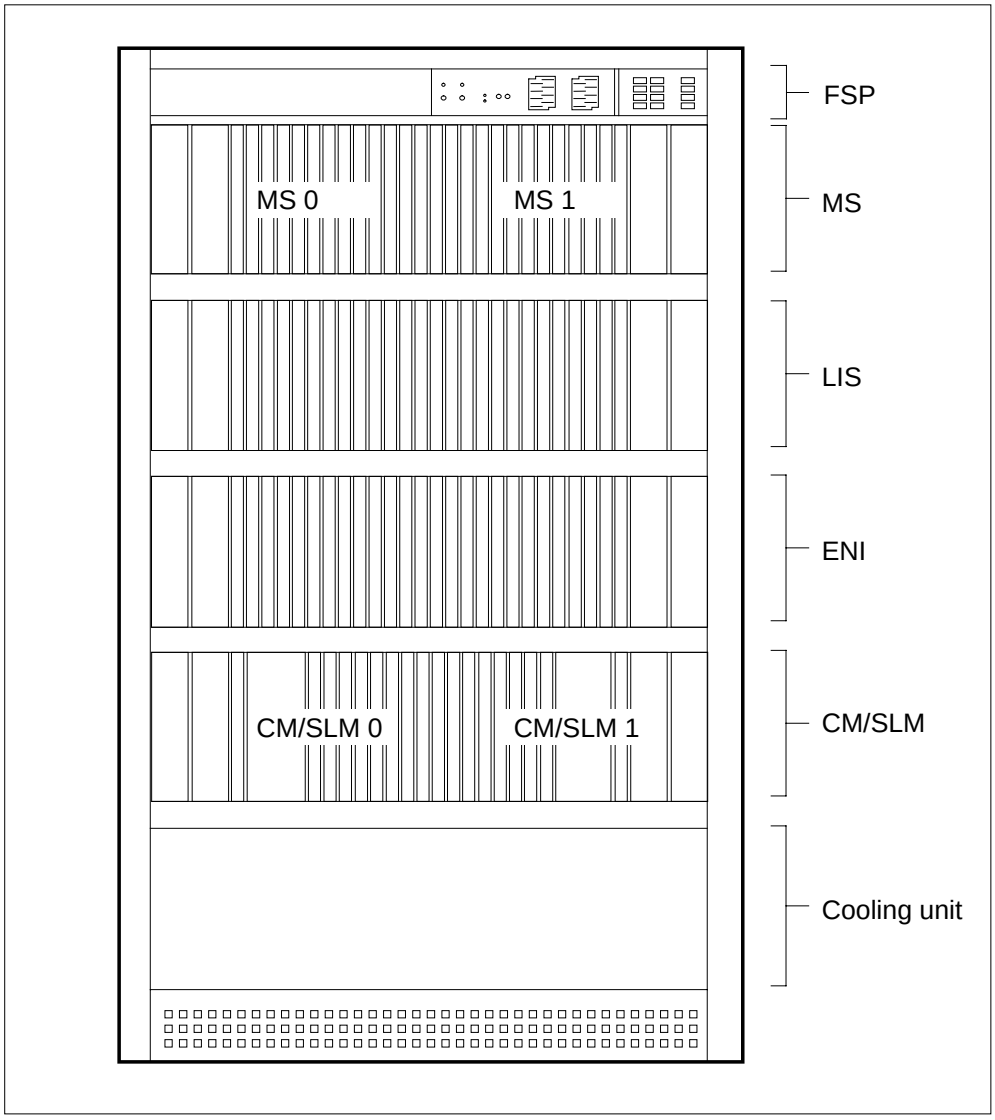

SuperNode SE CM/SLM shelf layouts (end)

Figure SuperNode SE CM/SLM

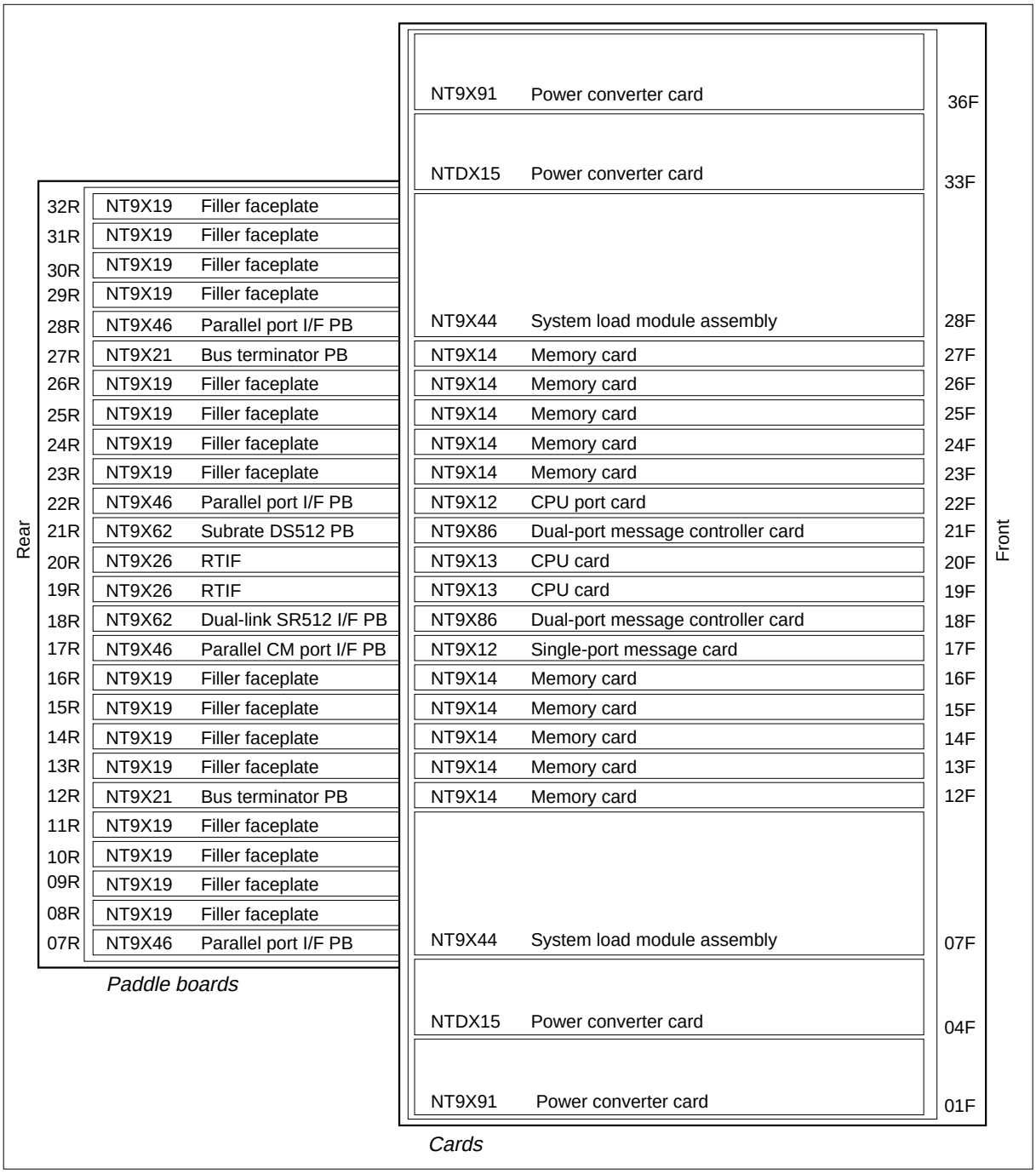

NT9X44
in a SuperNode SE CM/SLM

Application

Use this procedure to replace an NT9X44 in a SuperNode SE system load module (SLM).

PEC	Suffix	Card name	Shelf or frame name
NT9X44	AC	System load module IA assembly	CM/SLM
NT9X44	AD	System load module III assembly	CM/SLM

Refer to the “Index", if you cannot identify the following features for the card you want to replace:

- product engineering code (PEC)
- PEC suffix
- provisioned shelf
- provisioned frame

The “Index" contains a list of the cards, shelves, and frames documented in this card replacement book.

Sparing and field returns can cause SLM IIIs to have a combination of the current Connor and the new Tandberg drives. The SLM IIIs are in SuperNode and SuperNode SE switches. You can easily identify the drives with the new Tandberg drive that has a tape door.

Use the recommended tape cartridge as follows:

- DC600 for SLM I tape drive
- DC6250 for SLM IA and II tape drives
- DC6525 for SLM III tape drive

Common procedures

This procedure refers to the following common procedures:

- *Activity switch with memory match*
- *Switching the clock source*

NT9X44
in a SuperNode SE CM/SLM (continued)

Do not go to the common procedure unless the step-action procedure directs you.

Action

This procedure contains a summary flowchart and a list of steps. Use the flowchart to review the procedure. Follow the steps to perform the procedure.

NT9X44
in a SuperNode SE CM/SLM (continued)

Summary of Replacing a NT9X44 in a SuperNode SE CM/SLM

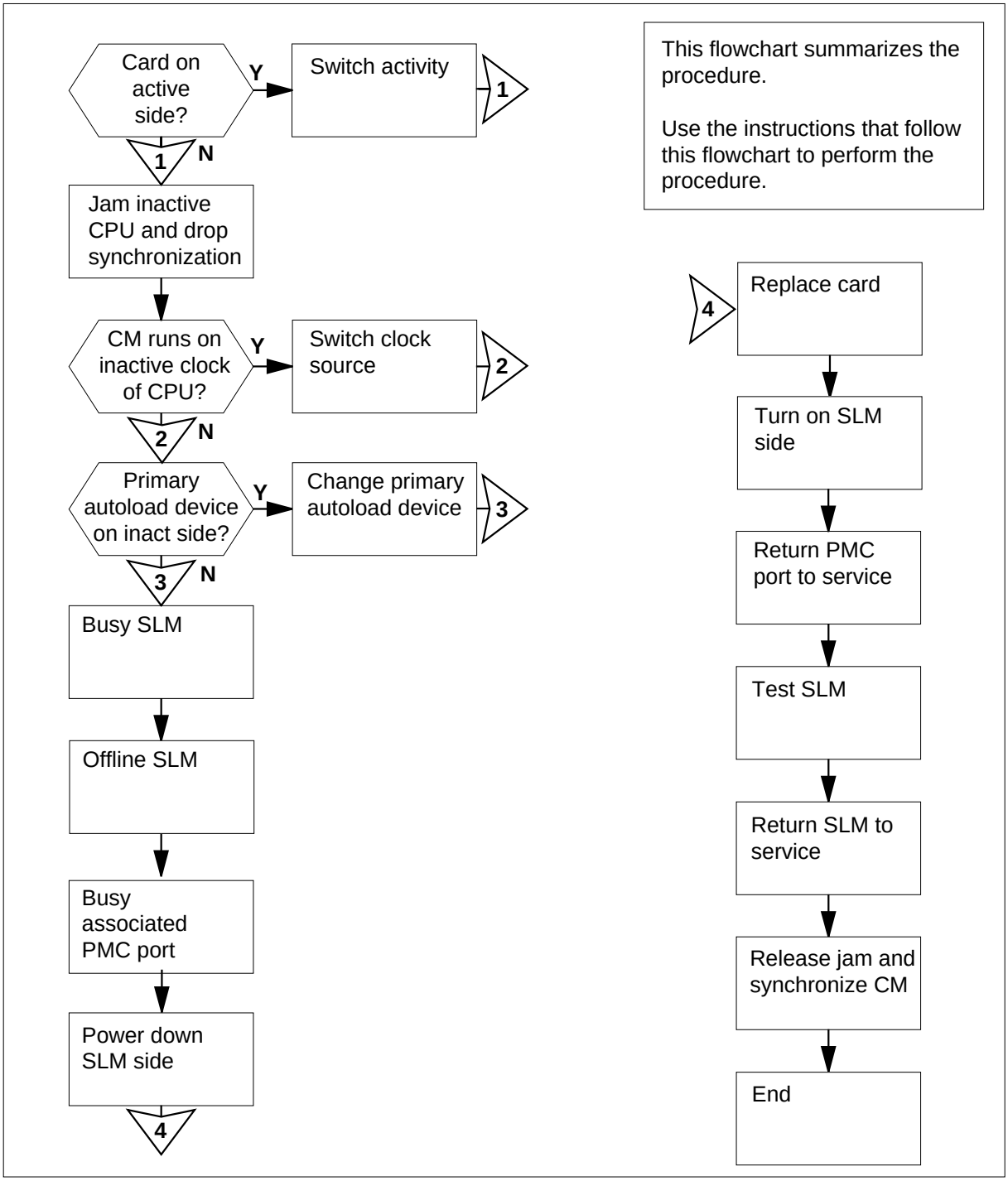

NT9X44
in a SuperNode SE CM/SLM (continued)

Replacing a NT9X44 in a SuperNode SE CM/SLM

At your current location

1

> **CAUTION**
> **Loss of data recording services**
> This procedure removes the SLM from service. Make sure that another device assumes the data recording services of the SLM that you remove from service, before you attempt this procedure. Make sure that the other device has the data storage capacity to assume the recording.

Obtain a replacement card. Make sure that the replacement card has the same PEC and PEC suffix, as the card that you replace.

2 Make sure that you have a backup SLM tape.

If you	Do
have a backup SLM tape	step 3
do not have a backup SLM tape	step 84

Note: The backup tape must contain copies of all of the disk files on the SLM that you will replace.

At the MAP terminal

3 To access the CM level of the MAP display, type

`>MAPCI;MTC;CM`

and press the Enter key.

Example of a MAP display:

```
CM  Sync  Act  CPU0  CPU1 Jam Memory CMMnt  MC  PMC
 0   no  cpu 1   .     .  yes    .     .     .   .
```

4 Determine if the computing module (CM) plane that contains the SLM you want to replace also contains the inactive CPU.

Note: The active CPU is the CPU shown under the Act header on the MAP display. In the example in step 3, the active CPU is CPU 1.

If the CM plane contains the	Do
inactive CPU	step 5

NT9X44
in a SuperNode SE CM/SLM (continued)

If the CM plane contains the	Do
active CPU	step 12

5 Determine if the inactive CPU is jammed.

Note: The word yes under the Jam header indicates that the inactive CPU is jammed. A blank field indicates that the CPU is not jammed.

If the inactive CPU is	Do
not jammed	step 6
jammed	step 8

At the CM reset terminal for the inactive CPU

6

DANGER
Loss of service
Make sure that you do not jam the active CPU. A cold restart occurs when you jam the active CPU while the CM is not in sync. The word Active on the top banner of the display identifies the reset terminal for the active CPU.

To jam the inactive CPU, type

>\JAM

and press the Enter key.

RTIF response:

```
Please confirm: (YES/NO)
```

7 To confirm the command, type

>YES

and press the Enter key.

RTIF response:

```
JAM DONE
```

NT9X44
in a SuperNode SE CM/SLM (continued)

At the MAP terminal

8 Determine if the CM is synchronized.

Note: A dot (.) or EccOn under the Sync header indicates that the CM is synchronized. The word no indicates that the CM is not synchronized.

If the CM is	Do
synchronized	step 9
not synchronized	step 13

9 To drop synchronization, type

>DPSYNC

and press the Enter key.

If the response is	Do
About to drop sync with CPU n active. The inactive CPU is JAMMED. Do you want to continue? Please confirm ("YES", "Y", "NO", or "N"):	step 10
other than listed here	step 84

10 To confirm the command, type

>YES

and press the Enter key.

Example of a MAP response:

```
Maintenance action submitted.
Running in simplex mode with active CPU n.
```

At the CM reset terminal for the inactive CPU

11 Wait until A1 flashes on the reset terminal for the inactive CPU.

Note: Allow approximately 5 min for A1 to start to flash.

If A1	Do
flashes	step 13
does not flash	step 84

12 Perform the procedure *Activity switch with memory match* in this document. Complete the procedure and return to this point.

NT9X44
in a SuperNode SE CM/SLM (continued)

At the MAP terminal

13

> **WARNING**
> **Loss of service**
> Make sure that the CM runs on the clock of the active CPU. A cold restart or a system image reload can occur if you power down the inactive side of the CM. Do not power down the inactive side of the CM while the CM runs on the clock of the inactive CPU.

To determine if the CM runs on the clock of the inactive CPU, type

>INSYNC

and press the Enter key.

Example of a MAP response:

```
CPU pair is NOT insync, CPU 0 is active.
CM is running on active CPU clock.

Memory Error Correction is ENABLED.

The Inactive CPU is Jammed.
```

If the CM runs on the clock of the	Do
inactive CPU	step 14
active CPU	step 15

14 To run the CM on the clock of the active CPU, perform the procedure *Switching the clock source* in this document. Complete the procedure and return to this point.

15 To access the CMMNT level of the MAP display, type

>CMMNT

and press the Enter key.

Example of a MAP display:

NT9X44
in a SuperNode SE CM/SLM (continued)

```
CM   Sync  Act  CPU0  CPU1  Jam  Memory  CMMnt  MC  PMC
 0    no  cpu 0  .     .     yes   .       .     .    .

Traps:          Per minute =     0      Total =     5

AutoLdev:       Primary = SLM 0 DISK  Secondary =  SLM 1
DISK

Image Restartable = No image test since last restart

Next image restart type =  WARM

Last CM REXTST executed

System memory in kbytes as of  14:39:07
Memory (kbytes): Used = 105984 Avail =  12800 Total =
118784
```

16 Determine if the primary autoload device is on the same side of the switch as the active CPU or the inactive CPU.

Note: The primary autoload device appears on the right of the Primary header. In the example in step 15, the primary autoload device is the disk of SLM 0.

If the primary autoload device is on the same side of the switch as the	Do
active CPU	step 23
inactive CPU	step 17

17 To change the primary autoload device to a device on the same side of the switch as the active CPU, type

`>AUTOLD SLM slm_number device_type`

and press the Enter key.

where

slm_number
is the number of the active CPU (0 or 1)

device_type
is the type of SLM device (DISK or TAPE)

Example of a MAP response:

```
New autoload route has been set.
```

NT9X44
in a SuperNode SE CM/SLM (continued)

18 To access the DIRP level of the MAP display, type

>IOD;DIRP

and press the Enter key.

19 To determine if there are any active files for each subsystem on the SLM to be made busy, type

>query ssys

and press the Enter key.

where

ssys
is the active subsystem (AMA, OM, or JF)

20 To close any active files for each subsystem on the SLM to be made busy, type

>close ssys [active]

and press the Enter key.

where

ssys
is the active subsystem (AMA, OM, or JF)

21 Demount the volume by typing

>DMNT ssys vol_name [paralel]

and pressing the Enter key.

where

ssys
is the subsystem (AMA, OM, or JF)

vol_name
is the name of the volume to be demounted

[paralel]
indicates that the volume is a parallel volume

Example of a MAP response:

```
UPDATING VOLUME INFORMATION FOR
vol_name:  vol_no IN pool_type POOL
pool_no, pool_name
PLEASE CONFIRM (”YES” OR ”NO”):.
```

22 Confirm the demount by typing

>YES

and pressing the Enter key.

Example of a MAP response:

NT9X44
in a SuperNode SE CM/SLM (continued)

```
REGULAR VOLUME vol_name WILL BE
TAKEN OUT OF DIRP AS SOON AS
POSSIBLE..
```

23 To access the SLM that corresponds to the inactive CPU, type

>IOD;SLM slm_number

and press the Enter key.

where

slm_number
is the number of the inactive CPU (0 or 1)

Example of a MAP display:

```
IOD
IOC  0  1  2  3
STAT .  .  .  .

DIRP:  .   XFER:  .   DVI :  .   DPPP:  .   DPPU:  .
NOP :  .   SLM :  .   NX25:  .   MLP :  .   SCAI:  .

SLM   0  1
Stat  .  .

SLM 0       device      TAPE        DISK
            status        .           .
            drive       idle        on line
            user                    SYSTEM
```

Note: Dots on the right of the SLM Stat header indicate that the associated SLMs are in service.

24 To manually busy the SLM, type

>BSY

and press the Enter key.

Example of a MAP response:

```
SLM 0 busy passed.
```

Example of a MAP display:

```
SLM   0  1
Stat  M  .
```

Note: The letter M on the right of the SLM Stat header indicates that the associated SLM is manual busy.

NT9X44
in a SuperNode SE CM/SLM (continued)

25 To offline the SLM, type

>OFFL

and press the Enter key.

Note: Wait for the light on the faceplate of the SLM to turn off before you continue this procedure.

Example of a MAP response:

```
SLM 0 now offline. Do not remove SLM card
until disk drive is spun down! This will be
indicated when the SLM card light turns off.
```

26 To access the PMC level of the MAP display, type

>CM;PMC

and press the Enter key.

Example of a MAP display:

```
          PMC 0
           .

 PORT0:    .
 PORT1:    .
```

27 To manually busy the port that corresponds to the inactive CPU, type

>BSY 0 PORT port_number

and press the Enter key.

where

port_number
is the number of the inactive CPU (0 or 1)

Example input

>BSY 0 PORT 0

Example of a MAP response:

```
Maintenance action submitted.
Passed.
```

NT9X44
in a SuperNode SE CM/SLM (continued)

At the CM/SLM shelf

28

DANGER
Equipment damage and possible loss of service
Make sure that you do not switch off the NTDX15 power converter. If you switch off the NTDX15 power converter, the associated CPU plane powers down. The SLM does not power down. The NT9X91 power converter powers the SLM.

WARNING
Static electricity damage
Wear a wrist strap that connects to the wrist-strap grounding point of a frame supervisory panel (FSP) to handle circuit cards. The wrist strap protects the cards against static electricity damage.

Power down the inactive SLM side. To switch off the NT9X91 power converter, press down and release the power switch. The power switch is on the faceplate of the converter.

Note: For CPU 0, NT9X91 the power converter is in slots 1F to 3F. For CPU 1, the NT9X91 power converter is in slots 36F to 38F.

29 Pull open the locking levers on the SLM until the levers are horizontal.

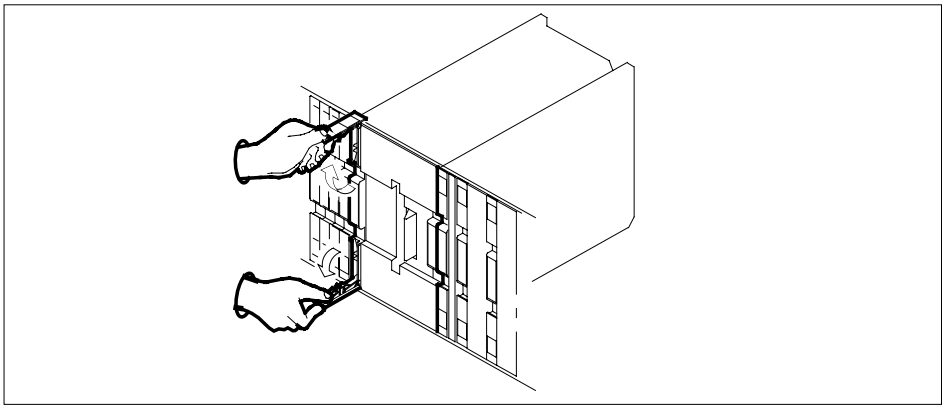

30 Grasp the locking levers. Pull the SLM toward you. Perform this procedure until the locking latch does not allow the SLM to clear the shelf. The locking latch is at the back of the SLM assembly.

NT9X44
in a SuperNode SE CM/SLM (continued)

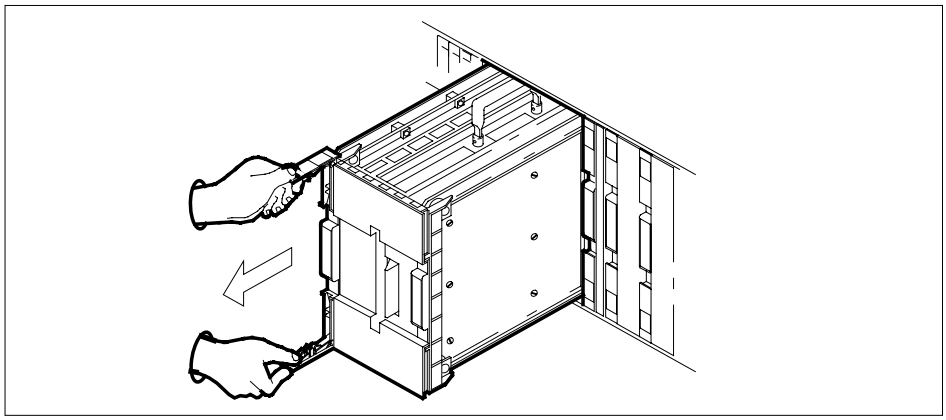

31 Close the locking levers.

32 Grasp the carrying handle. Use your thumb to press the locking latch while you slide the SLM from the shelf.

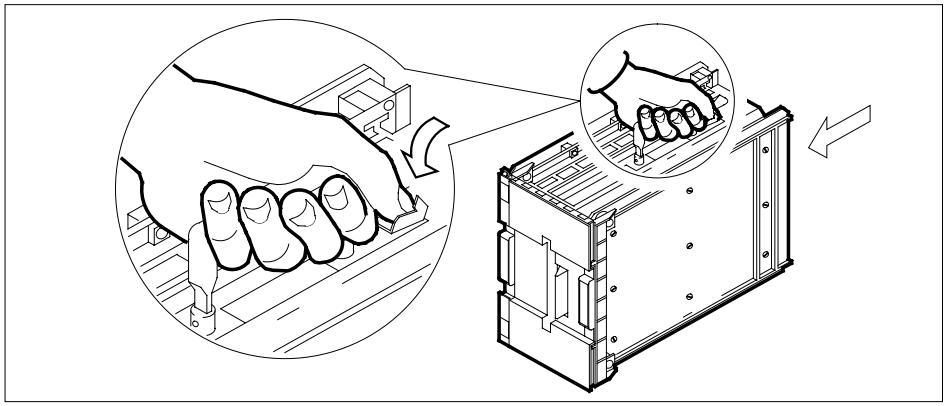

33 Place the SLM you removed in an electrostatic discharge (ESD) protective container.

34 Lift the replacement SLM by the carrying handle.

35 Pull open the locking levers until the levers are horizontal.

36 Use your free hand to align the SLM with the slots in the shelf. Carefully slide the SLM into the shelf until the locking latch at the back of the SLM locks.

> ***Note:*** You do not need to use excessive force to slide the SLM into the shelf.

37 Slide the SLM completely into the shelf.

38 Use your fingers or thumbs to push on the upper and lower edges of the faceplate. Make sure that the SLM sits completely in the shelf.

39 Close the locking levers.

NT9X44
in a SuperNode SE CM/SLM (continued)

40 Turn on the inactive SLM side. To switch on the NT9X91 SLM power converter, lift and release the power switch. The power switch is on the faceplate of the converter.

Note: For CPU 0, the NT9X91 power converter is in slots 1F to 3F. For CPU 1, the NT9X91 power converter is in slots 36F to 38F.

If the SLM has a	Do
Connor tape drive	step 41
Tandberg tape drive	step 43

41 Insert a scratch tape into the SLM. Use the tape cartridge specified in the application section at the beginning of this procedure.

Note: Insert a tape cartridge with the metal plate to the left. The tape access opening faces towards the top.

42 To lock the tape in place, press down on the locking lever.

Go to step 44.

43 To open the drive door, push on the Tandberg drive door button. Insert a scratch tape with the read and write tape facing the bottom of the drive. Close the drive door.

At the MAP terminal

44 To access the PMC level of the MAP display, type

`>CM;PMC`

and press the Enter key.

45 To return the manual busy PMC port to service, type

`>RTS 0 PORT port_number`

and press the Enter key.

where

port_number
is the number of the inactive CPU (0 or 1)

Example of a MAP response:

```
Maintenance action submitted.
Passed.
```

If the RTS command	Do
passed	step 46
failed	step 84

46 To access the MAP level for the SLM that you replaced, type

`>IOD;SLM slm_number`

and press the Enter key.

where

slm_number
is the number of the SLM (0 or 1) that you replaced

47 To manually busy the SLM, type

>BSY

and press the Enter key.

If the BSY command	Do
passed	step 48
failed	step 84

48 To spin up the SLM disk, type

>SPIN UP

and press the Enter key.

Note: Wait for the light on the faceplate of the SLM to turn on before you continue this procedure.

Example of a MAP response:

```
Disk of SLM 0 is  ready.
```

49 To test the replacement SLM, type

>TST ALL

and press the Enter key.

MAP response:

```
The tape test will write on the tape media.
It is recommended to insert a scratch tape,
otherwise data on the current tape may be
destroyed.  Are you ready to continue?
Please confirm (”YES”, ”Y”, ”NO”, or ”N”):
```

50 To confirm the command, type

>YES

and press the Enter key.

If the response indicates	Do
the TST command passed	step 53
the TST command failed, and the system generated a card list	step 51

NT9X44
in a SuperNode SE CM/SLM (continued)

If the response indicates	Do
other than listed here	step 84

51 Record the location, description, slot number, PEC and the PEC suffix, of the cards on the list.

52 To replace each card on the list, perform the correct card replacement procedure in this document. Replace all the cards on the list and return to this point.

At the CM reset terminal for the inactive CPU

53 To release the jam on the inactive CPU, type

`>\RELEASE JAM`

and press the Enter key.

RTIF response:

```
JAM RELEASE DONE
```

At the MAP terminal

54 To synchronize the CM, type

`>CM;SYNC`

and press the Enter key.

Example of a MAP response:

```
Maintenance action submitted.
Synchronization successful.
```

If the response	Do
indicates the SYNC command was successful	step 55
other than listed here	step 84

55 To access the disk administration utility, type

`>DISKADM disk_name`

and press the Enter key.

where

disk_name
is the name of the disk in the SLM that you replaced (S00D for SLM 0, or S01D for SLM 1)

Example of a MAP response:

NT9X44
in a SuperNode SE CM/SLM (continued)

```
Start up command sequence is in progress.
This may take a few minutes.
Administration of device S00D on CM is now active.
DISKADM;  CM
```

56 To format the disk, type

>FORMATDISK disk_name

and press the Enter key.

where

disk_name
is the name of the disk in the SLM replaced (S00D for SLM 0, or S01D for SLM 1)

Example of a MAP response:

```
                 *****  WARNING  *****

Formatting of S00D
will destroy the contents of the disk.

The formatting will:
   allocate 3 spare or alternate sectors per track,
   allocate 16 spare or alternate tracks per disk,
   use the G defect list,
   assign S00D as the name for the disk.
   perform quick format,
   exclude force option.

Do you want to continue?
Please confirm (”YES”, ”Y”, ”NO”, or ”N”):
```

57 To confirm the command, type

>YES

and press the Enter key.

Example of a MAP response:
Formatting of disk has started.This may take 10 to 30 minutes.Formatting of disk has finished.

58 To obtain a list of all the volumes required on the SLM disk, consult office records or operating company personnel.

59 To create a volume, type

>CREATEVOL volume_name volume_size STD

and press the Enter key.

where

NT9X44
in a SuperNode SE CM/SLM (continued)

volume_name
is the name of the volume (maximum of eight characters)

volume_size
is the size of the volume in megabytes

Example input:

>CREATEVOL VOL1 20 STD

Example of a MAP response:

```
STD volume VOL1 will be created on S00D.

Volume size:                 20 megabytes
File Directory size:         128 files
Volume Free Space Map size:  64 segments

Do you want to continue?
Please confirm (”YES”, ”Y”, ”NO”, or ”N”):
```

60 To confirm the command, type

>YES

and press the Enter key.

MAP response:

```
Creation of the volume is completed.
```

61 Repeat steps 59 and 60 for each volume on the list that you obtained in step 58.

62 To quit the disk administration utility, type

>QUIT

and press the Enter key.

63 To access the replacement SLM, type

>IOD;SLM slm_number

and press the Enter key.

where

slm_number
is the number of the replacement SLM (0 or 1)

64 To return the SLM to service, type

>RTS

and press the Enter key.

Example of a MAP response:

```
SLM 0 return to service passed.
```

If the RTS command	Do
passed	step 65
failed	step 84

65 Obtain the backup tape for the SLM that you replaced.

If the SLM has a	Do
Connor tape drive	step 66
Tandberg tape drive	step 68

At the CM/SLM shelf

66 Remove the scratch tape and insert the backup tape into the SLM.

> ***Note:*** Insert a tape cartridge with the metal plate to the left. The tape access opening faces upwards.

67 To lock the tape in place, press down on the locking lever.

Go to step 70.

68 To open the drive door, push on the Tandberg drive door button. To release the tape cartridge, continue to push on the button. To withdraw the scratch tape, pull the scratch tape straight out of the drive unit.

69 Insert the backup tape with the read and write tape that faces the bottom of the drive. To close the door, push on the drive door to close the door.

> ***Note:*** A diagram on the inside of the Tandberg drive door indicates the position of the tape.

At the MAP terminal

70 To access the disk utility, type

`>DISKUT`

and press the Enter key.

MAP response:

```
Disk utility is now active.
DISKUT:
```

71 To mount the backup tape cartridge, type

`>INSERTTAPE  tape_device_name`

and press the Enter key.

where

NT9X44
in a SuperNode SE CM/SLM (continued)

tape_device_name
is the name of the tape device that contains the backupSLM tape (S00T for SLM 0, or S01T for SLM 1)

Example of a MAP response:

```
The INSERT operation may take
up to 5 minutes to tension the tape.
```

72 To list the files stored on the back-up SLM tape, type

>LISTFL tape_device_name

and press the Enter key.

where

tape_device_name
is the name of the tape device containing the back-upSLM tape (S00T for SLM0 or S01T for SLM1)

73 The next action depends on the name of the disk volume on tape.

If the disk volume name is	Do
the same on the backup tape and the SLM disk	step 74
not the same on the backup tape and the SLM disk	step 76

74 To copy the backup files to the disk in the SLM that you replaced, type

>RESTORE STDVOL disk_volume_name tape_device_name tape_file_name

and press the Enter key.

where

disk_volume_name
is the name of the disk (S00D or S01D), and the name of the volume on the disk where you will restore the backup files

tape_device_name
is the name of the tape device (S00T or S01T) thatcontains the backup SLM tape

tape_file_name
is the name of the tape file that contains the backup files

Example input

>RESTORE STDVOL ROOTDIR.S00DPMLOADS S00T S00DPMLOADS

75 Repeat step 74 for each disk volume that you created. Go to step 78.

76 To copy the backup files to the disk in the SLM that you replaced, type

>RESTORE STDVOL disk_volume_name tape_device_name tape_file_name

and press the Enter key.

where

NT9X44
in a SuperNode SE CM/SLM (continued)

disk_volume_name
is the name of the disk (S00D or S01D), and the name of the volume on the disk where you will restore the backup files

tape_device_name
is the name of the tape device (S00T or S01T) that contains the backup SLM tape

tape_file_name
is the name of the tape file that contains the backup files

Example input

```
>RESTORE  STDVOL  S00DPMLOADS  S00T  PMLOADS
```

77 Repeat step 76 for each disk volume that you created.

78 To demount the tape cartridge, type

```
>EJECTTAPE  tape_device_name
```

and press the Enter key.

where

tape_device_name
is the name of the tape device (S00T or S01T) thatcontains the backup SLM tape

Example of a MAP response:

```
The eject operation may take up to 5 minutes
to position the tape to the beginning.
```

79 To quit the disk utility, type

```
>QUIT
```

and press the Enter key.

80 Determine if an ITOC alarm is present under the IOD header of the alarm banner.

If an ITOC alarm is	Do
present	step 81
not present	step 82

81 Perform the correct ITOC alarm clearing procedure in *Alarm and Performance Monitoring Procedures*. Complete the procedure and return to this point.

82 Your next step depends on the reason that you perform this procedure.

If you perform this procedure as a result of	Do
another maintenance procedure	step 83

NT9X44
in a SuperNode SE CM/SLM (end)

If you perform this procedure as a result of	Do
other than listed here	step 85

83 Return to the maintenance procedure that directed you to this procedure and continue as directed.

84 For additional help, contact the next level of support.

85 The procedure is complete.

NT9X46 in a SuperNode SE CM/SLM

Application

Use this procedure to replace an NT9X46 in a SuperNode SE (SNSE) computing module (CM) or system load module (SLM), as listed in the following table.

PEC	Suffix	Card name	Shelf or frame name
NT9X46	AA	Parallel port interface paddle board	CM/SLM

Refer to the “Index", if you cannot identify the following features for the card you want to replace:

- the product engineering code (PEC)
- PEC suffix
- provisioned shelf
- provisioned frame

The “Index" contains a list of the cards, shelves, and frames documented in this card replacement book.

Common procedures

This procedure refers to the following common procedures:

- *Activity switch with memory match*
- *Replacing a card*
- *Switching the clock source*
- *Verifying load compatibility of SuperNode cards*

Do not go to the common procedure unless the step-action procedure directs you.

Action

This procedure contains a summary flowchart and a list of steps. Use the flowchart to review the procedure. Follow the steps to perform the procedure.

NT9X46
in a SuperNode SE CM/SLM (continued)

Summary of Replacing anNT9X46 in a SuperNode SE CM/SLM

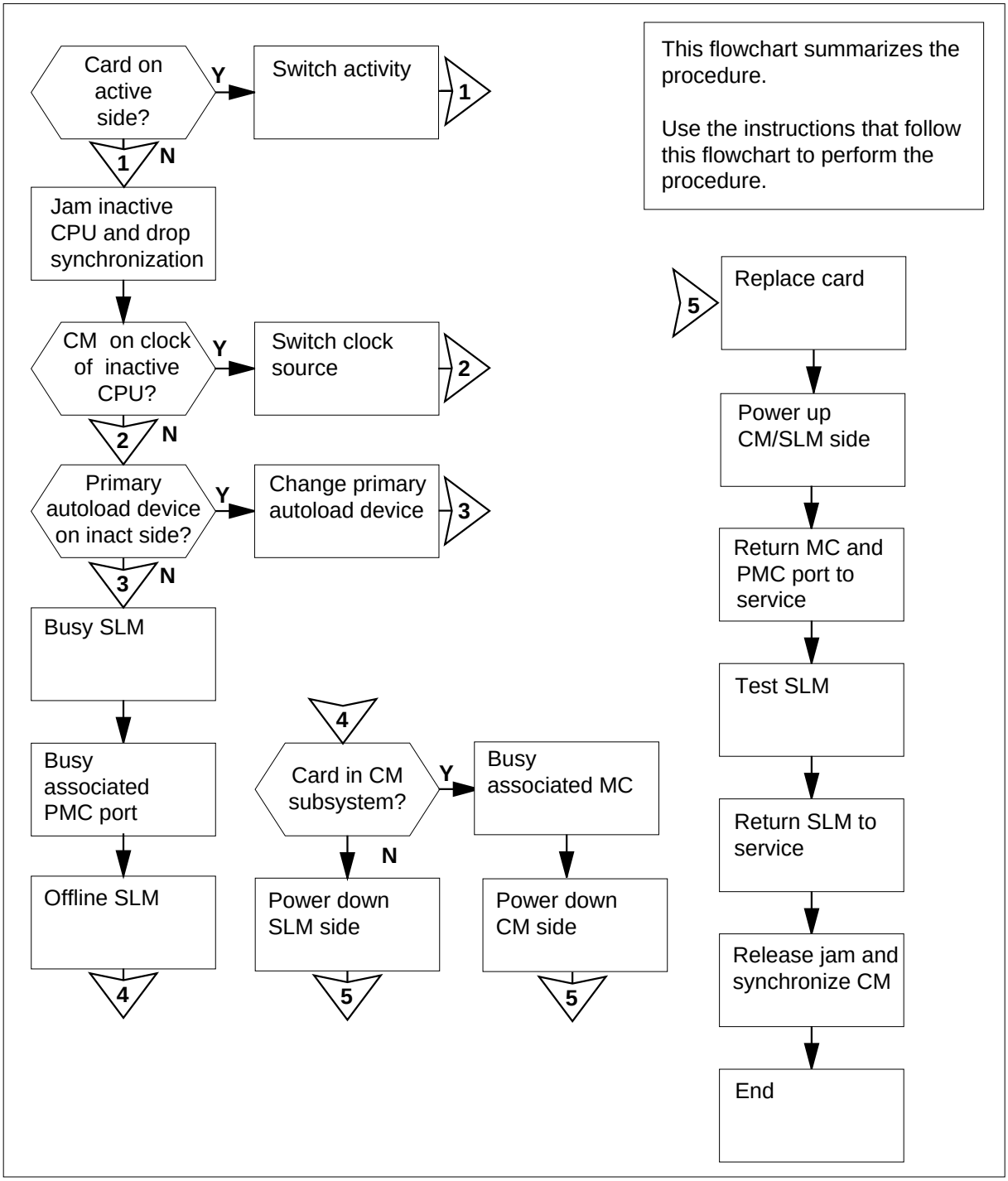

NT9X46
in a SuperNode SE CM/SLM (continued)

Replacing anNT9X46 in a SuperNode SE CM/SLM

At your current location

1

> **WARNING**
> **Possible loss of data recording services**
> This procedure manually busies the SLM on the same plane as the card that you will replace. Make sure that the SLM on the opposite plane from the card you replace assumes data recording services, before you attempt this procedure.

Obtain a replacement card. Make sure that the replacement card has the same PEC and PEC suffix as the card that you will replace.

2 Perform the procedure *Verifying load compatibility of SuperNode cards* in this document. Complete the procedure and return to this point.

At the MAP terminal

3 To access the CM level of the MAP display, type

`>MAPCI;MTC;CM`

and press the Enter key.

Example of a MAP display:

```
CM  Sync  Act  CPU0  CPU1 Jam Memory CMMnt  MC  PMC
 0   no  cpu 1   .     .  yes    .     .     .   .
```

4 Determine if the SLM assembly that you replaced associates with the active CPU or the inactive CPU.

Note: The active CPU appears under the Act header on the MAP display. In the example in step 3, the active CPU is CPU 1.

If the SLM assembly	Do
associates with the inactive CPU	step 5
associates with the active CPU	step 12

NT9X46
in a SuperNode SE CM/SLM (continued)

5 Determine if the inactive CPU is jammed.

Note: The word yes under the Jam header indicates that the inactive CPU is jammed. A blank field indicates that the CPU is not jammed.

If the inactive CPU	Do
is not jammed	step 8
is jammed	step 6

At the CM reset terminal for the inactive CPU

6

DANGER
Loss of service
Make sure that you do not jam the active CPU. A cold restart occurs when you jam the active CPU while the CM is not in sync. The word Active on the top banner of the display identifies the reset terminal for the active CPU.

To jam the inactive CPU, type

>\JAM

and press the Enter key.

RTIF response:

```
Please confirm: (YES/NO)
```

7 To confirm the command, type

>YES

and press the Enter key.

RTIF response:

```
JAM DONE
```

At the MAP terminal

8 Determine if the CM is synchronized.

Note: A dot (.) or EccOn under the Sync header indicates that the CM is synchronized. The word no indicates that the CM is not synchronized.

If the CM	Do
is synchronized	step 9

NT9X46
in a SuperNode SE CM/SLM (continued)

If the CM	Do
is not synchronized	step 13

9 To drop synchronization, type

>DPSYNC

and press the Enter key.

If the response	Do
is About to drop sync with CPU n active. The inactive CPU is JAMMED. Do you want to continue? Please confirm ("YES", "Y", "NO", or "N"):	step 10
is other than listed here	step 61

10 To confirm the command, type

>YES

and press the Enter key.

Example of a MAP response:

```
Maintenance action submitted.
Running in simplex mode with active CPU n.
```

At the CM reset terminal for the inactive CPU

11 Wait until A1 flashes on the reset terminal for the inactive CPU.

Note: Allow approximately 5 min for A1 to start to flash.

If A1	Do
flashes	step 13
does not flash	step 61

12 Perform the procedure *Activity switch with memory match* in this document. Complete the procedure and return to this point.

NT9X46
in a SuperNode SE CM/SLM (continued)

At the MAP terminal

13

> **WARNING**
> **Loss of service**
> Make sure that the CM runs on the active clock of the CPU. Do not power down the inactive side of the CM while the CM runs on the clock of the inactive CPU. A cold restart or system image reload can occur which results in loss of service.

To determine if the CM runs on the inactive clock of the CPU, type

>INSYNC

and press the Enter key.

Example of a MAP response:

```
CPU pair is NOT insync, CPU 0 is active.
CM is running on active CPU clock.

Memory Error Correction is ENABLED.

The Inactive CPU is Jammed.
```

If the CM	Do
runs on the inactive clock of the CPU	step 14
runs on the active clock of the CPU	step 15

14 To run the CM on the active clock of the CPU, perform the procedure *Switching the clock source* in this document. Complete the procedure and return to this point.

15 To access the CMMNT level of the MAP display, type

>CMMNT

and press the Enter key.

Example of a MAP display:

```
CM   Sync  Act  CPU0  CPU1  Jam  Memory  CMMnt  MC  PMC
 0    no  cpu 0  .     .     yes   .       .     .    .

Traps:          Per minute =     0      Total =     5

AutoLdev:       Primary = SLM 0 DISK  Secondary =  SLM 1
DISK

Image Restartable = No image test since last restart

Next image restart type =  WARM

Last CM REXTST executed

System memory in kbytes as of  14:39:07
Memory (kbytes): Used = 105984 Avail =  12800 Total =
118784
```

16 Determine if the primary autoload device is on the side of the switch with the active CPU or the inactive CPU.

Note: The primary autoload device appears on the right side of the Primary header. In the example in step 15, the primary autoload device is the disk of SLM 0.

If the primary autoload device	Do
is on the side of the switch with the active CPU	step 18
is on the side of the switch with the inactive CPU	step 17

17 To change the primary autoload device to a device on the same side of the switch as the active CPU, type

`>AUTOLD SLM slm_number device_type`

and press the Enter key.

where

slm_number
is the number of the active CPU (0 or 1)

device_type
is the type of SLM device (DISK or TAPE)

Example of a MAP response:

```
New autoload route has been set.
```

18 To access the SLM that corresponds to the inactive CPU, type

`>IOD;SLM slm_number`

and press the Enter key.

NT9X46
in a SuperNode SE CM/SLM (continued)

where

slm_number
is the number of the inactive CPU (0 or 1)

Example of a MAP display:

```
IOD
IOC  0  1  2  3
STAT .  .  .  .

DIRP:  .   XFER:  .   DVI :  .   DPPP:  .   DPPU:  .
NOP :  .   SLM :  .   NX25:  .   MLP :  .   SCAI:  .

SLM   0  1
Stat  .  .

SLM 0       device      TAPE        DISK
            status        .           .
            drive       idle        on line
            user                    SYSTEM
```

Note: Dots on the right side of the SLM Stat header indicate that the associated SLMs are in service.

19 To manually busy the SLM, type

>BSY

and press the Enter key.

Example of a MAP response:

```
SLM 0 busy passed.
```

Example of a MAP display:

```
SLM   0  1
Stat  M  .
```

Note: The letter M on the right of the SLM Stat header indicates that the associated SLM is manual busy.

20 To access the PMC level of the MAP display, type

>CM;PMC

and press the Enter key.

Example of a MAP display:

NT9X46
in a SuperNode SE CM/SLM (continued)

```
          PMC 0
            .

PORT0:      .
PORT1:      .
```

21 To manually busy the port that corresponds to the inactive CPU, type

>BSY 0 PORT port_number

and press the Enter key.

where

port_number
is the number of the inactive CPU (0 or 1)

Example input

>BSY 0 PORT 0

Example of a MAP response:

```
Maintenance action submitted.
Passed.
```

22 To spin down the SLM disk, type

>SPIN DOWN

and press the Enter key.

Note: The light on the faceplate of the SLM starts to blink. After 1 min, the light turns off. Wait for the light to turn off before you continue this procedure.

Example of a MAP response:

```
Disk of SLM 0 is  not ready.
```

23 To offline the SLM, type

>OFFL

and press the Enter key.

Example of a MAP response:

```
SLM 0 now offline. Do not remove SLM card
until disk drive is spun down! This will be
indicated when the SLM card light turns off.
```

NT9X46
in a SuperNode SE CM/SLM (continued)

24 The next action depends on if the card that you replaced is part of the CM subsystem or the SLM subsystem.

If the card	Do
is part of the CM subsystem (card is in slot 17R or 22R)	step 25
is part of the SLM subsystem (card is in slot 7R or 28R)	step 32

25 To access the MC level of the MAP display, type

>MC

and press the Enter key.

Example of a MAP display:

```
MC 0     MC 1
  .        .
```

Note: In the example, dots under the MC headers indicate that the associated MCs are in service.

26 Determine the state of the message controller (MC) on the inactive CPU.

Note: The term mbsy under the MC header indicates that the MC is manual busy.

If the state of the MC	Do
is mbsy	step 28
is not mbsy	step 27

27

WARNING
Possible loss of service
Make sure that you do not manually busy the MC that corresponds to the active CPU. Do not power down the inactive CPU plane with the MC that associates with the active busied CPU. This action will cause a warm restart.

To manually busy the MC that corresponds to the inactive CPU, type

>BSY mc_number

and press the Enter key.

where

NT9X46
in a SuperNode SE CM/SLM (continued)

mc_number
is the number of the inactive CPU (0 or 1)

Example of a MAP response:

```
Maintenance action submitted.
MC busied OK.
```

If the MC	Do
busied	step 28
did not busy	step 61

At the CM/SLM shelf

28

WARNING
Static electricity damage
Wear a wrist strap that connects to the wrist-strap grounding point of a frame supervisory panel (FSP) to handle circuit cards. The wrist strap protects the cards against static electricity damage.

To power down the inactive CPU plane, press down and release the power switch on the faceplate of the NTDX15 power converter.

Note: For CPU 0, the NTDX15 power converter is in slots 4F to 6F. For CPU 1, the NTDX15 power converter is in slots 33F to 35F.

29 Perform the procedure *Replacing a card* in this document. Complete the procedure and return to this point.

30 To power up the inactive CPU plane, lift and release the power switch on the faceplate of the NTDX15 power converter.

Note: For CPU 0, the NTDX15 power converter is in slots 4F to 6F. For CPU 1, the power converter is in slots 33F to 35F.

31 Go to step 37.

NT9X46
in a SuperNode SE CM/SLM (continued)

At the CM/SLM shelf

32

DANGER
Equipment damage and possible loss of service
Make sure that you do not switch off the NTDX15 power converter. If you switch off the NTDX15 power converter, the associated CPU plane powers down. The SLM does not power down. The NT9X91 power converter powers the SLM.

Power down the inactive SLM side. To switch off the NT9X91 power converter, press down and release the power switch on the faceplate of the converter.

Note: For CPU 0, NT9X91 the power converter is in slots 1F to 3F. For CPU 1, the NT9X91 power converter is in slots 36F to 38F.

33

WARNING
Equipment damage and possible loss of service
Make sure that you remove the interconnect cable from the NT9X46 card on the inactive side only. Make sure that you disconnect the cable in the correct sequence.

Remove the interconnect cable from the NT9X46 cards on the inactive plane as follows:

a For plane 0:

- **i** Disconnect the cable from the card in slot 17R.
- **ii** Disconnect the cable from the card in slot 07R.

b For plane 1:

- **i** Disconnect the cable from the card in slot 22R.
- **ii** Disconnect the cable from the card in slot 28R.

34 Perform the procedure *Replacing a card* in this document. Complete the procedure and return to this point.

35 Connect the interconnect cable to the NT9X46 cards on the inactive plane as follows:

a For plane 0:

- **i** Connect the cable to the card in slot 07R.
- **ii** Connect the cable to the card in slot 17R.

b For plane 1:

NT9X46
in a SuperNode SE CM/SLM (continued)

i Connect the cable to the card in slot 28R.

ii Connect the cable to the card in slot 22R.

36 To power up the inactive SLM side, lift and release the power switch on the faceplate of the NT9X91 power converter.

Note: For plane 0, the power converter is in slots 1F to 3F. For plane 1, the power converter is in slots 36F to 38F.

At the CM reset terminal for the inactive CPU

37

WARNING
You must complete the firmware tests
If you do not complete the firmware tests, the CPUs cannot synchronize.

Wait for the switch to complete firmware tests.

Example of an RTIF response:

```
Testing Memory:
Shelf    Slot       PEC Module Status
 00       15       NT9X14EA ......
 00       16       NT9X14EA ......
Waiting for activity...
```

Note: When firmware testing is in progress, dots appear on the right of the PEC in the firmware testing status line of the RTIF response. As each firmware test is complete, another dot appears until firmware testing for the card is complete. If the dots do not continue to appear and another firmware testing status line does not appear, firmware tests stop. If the dots do not continue to appear and the prompt Waiting for activity does not appear, firmware tests stop.

38 Determine if the firmware tests completed.

Note: If the firmware tests completed and the CPU powered up, the Waiting for activity message appears.

If the inactive CPU	Do
powered up	step 39
did not turn on	step 61

NT9X46
in a SuperNode SE CM/SLM (continued)

At the MAP terminal

39 To make sure that you are at the PMC level of the MAP display, type

`>CM;PMC`

and press the Enter key.

40 To return the manual busy PMC port to service, type

`>RTS 0 PORT port_number`

and press the Enter key.

where

port_number
is the number of the inactive CPU (0 or 1)

Example of a MAP response:

```
Maintenance action submitted.
Passed.
```

If the RTS command	Do
passed	step 41
failed	step 61

41 To access the SLM that associates with the card that you replaced, type

`>IOD;SLM slm_number`

and press the Enter key.

where

slm_number
is the number of the SLM (0 or 1)

42 To manually busy the SLM, type

`>BSY`

and press the Enter key.

If the BSY command	Do
passed	step 43
failed	step 61

43 To spin up the SLM disk, type

`>SPIN UP`

and press the Enter key.

Note: Wait for the light on the faceplate of the SLM to turn on before you continue this procedure.

NT9X46
in a SuperNode SE CM/SLM (continued)

Example of a MAP response:

```
Disk of SLM 0 is  ready.
```

44 To test the SLM, type

>TST

and press the Enter key.

Example of a MAP response:

```
Minimum SLM 0 tests passed.
```

If the TST command	Do
passed	step 47
failed, and the system generated a card list	step 45
is other than listed here	step 61

45 Record the location, description, slot number, PEC and the PEC suffix of the cards on the list.

46 To replace each card on the list, perform the correct card replacement procedure in this document. Complete the procedure and return to this point.

47 To return the SLM to service, type

>RTS

and press the Enter key.

Example of a MAP response:

```
SLM 0 return to service passed.
```

If the RTS command	Do
passed	step 48
failed	step 61

48 The next action depends on if the card that you replaced is part of the CM subsystem or the SLM subsystem.

If the card	Do
is part of the CM subsystem (card is in slot 17R or 22R)	step 49

NT9X46
in a SuperNode SE CM/SLM (continued)

If the card	Do
is part of the SLM subsystem (card is in slot 7R or 28R)	step 57

49 Your next step depends on the reason that you perform this procedure.

If you	Do
perform this procedure as a result of a MC Tbl alarm	step 53
perform this procedure as a result of a PMCFlt alarm	step 53
perform this procedure as a result of a NoTOD alarm	step 53
perform this procedure as a result of a SBsyMC alarm	step 53
perform this procedure as a result of a MBsyMC alarm	step 53
perform this procedure as a result of a CBsyMC alarm	step 53
perform this procedure for any reason other than listed here	step 50

At the MAP terminal

50 To access the MC level of the MAP display, type

`>CM;MC`

and press the Enter key.

51 To return the manual busy MC to service, type

`>RTS mc_number`

and press the Enter key.

where

mc_number
is the number of the manual busy MC (0 or 1)

Example of a MAP response:

```
Maintenance action submitted.
MC RTS ok.
```

If the RTS command	Do
passed	step 52

NT9X46
in a SuperNode SE CM/SLM (continued)

If the RTS command	Do
failed	step 61

52 The next action depends on the reason that you performed this procedure.

If you	Do
perform this procedure as a result of a CM alarm clearing procedure	step 53
perform this procedure for any reason other than listed here	step 54

53 Return to the alarm clearing procedure that directed you to this procedure and continue as directed.

54 To access the CM level of the MAP display, type

>CM

and press the Enter key.

55 To test the inactive CPU, type

>TST

and press the Enter key.

Example of a MAP response:

```
The test(s) listed below will destroy
the software load in inactive CPU:

    Static RAM test

Do you want to do the test(s) anyway?
Please confirm: (”YES”, ”Y”, ”NO”, or ”N”):
```

56 To confirm the command, type

>YES

and press the Enter key.

Example of a MAP response:

```
Maintenance action submitted.
Test passed.
```

If the TST command	Do
passed	step 57

NT9X46 in a SuperNode SE CM/SLM (end)

If the TST command	Do
is other than listed here	step 61

At the CM reset terminal for the inactive CPU

57 To release the jam on the inactive CPU, type

>\RELEASE JAM

and press the Enter key.

RTIF response:

```
JAM RELEASE DONE
```

At the MAP terminal

58 To synchronize the CM, type

>SYNC

and press the Enter key.

Example of a MAP response:

```
Maintenance action submitted.
Synchronization successful.
```

If the response	Do
indicates the SYNC command was successful	step 59
is other than listed here	step 61

59 The next action depends on the reason that you perform this procedure.

If you	Do
perform this procedure as a result of another maintenance procedure	step 60
perform this procedure for any reason other than listed here	step 62

60 Return to the maintenance procedure that directed you to this procedure and continue as directed.

61 For additional help, contact the next level of support.

62 The procedure is complete.

NT9X62 in a SuperNode SE CM/SLM

Application

Use this procedure to replace an NT9X62 in a SuperNode SE (SNSE) computing module (CM) or system load module (SLM).

PEC	Suffix	Card name	Shelf or frame name
NT9X62	AA	Two-port subrate DS512 paddle board	CM/SLM
NT9X62	BA	Four-port subrate DS512 paddle board	CM/SLM

Refer to the “Index", if you cannot identify the following features for the card you want to replace:

- the product engineering code (PEC)
- PEC suffix
- provisioned shelf
- provisioned frame

The “Index" contains a list of the cards, shelves, and frames documented in this card replacement book.

Common procedures

This procedure refers to the following common procedures:

- *Activity switch with memory match*
- *Switching the clock source*
- *Verifying load compatibility of SuperNode cards*

Do not go to the common procedure unless the step-action procedure directs you to go.

Action

This procedure contains a summary flowchart and a list of steps. Use the flowchart to review the procedure. Follow the steps to perform the procedure.

NT9X62
in a SuperNode SE CM/SLM (continued)

Summary of Replacing an NT9X62 in a SuperNode SE CM/SLM

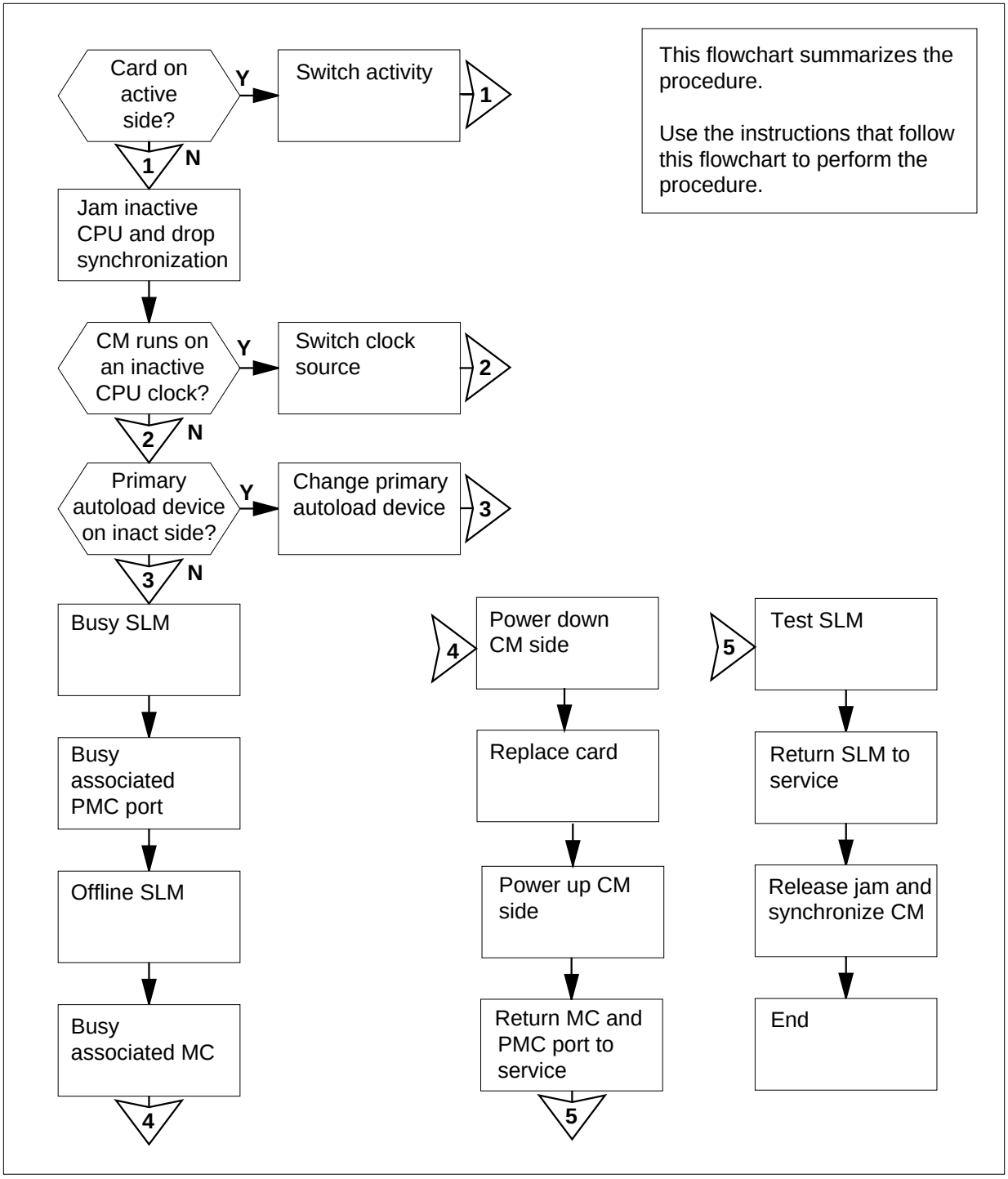

NT9X62
in a SuperNode SE CM/SLM (continued)

Replacing NT9X62 in a SuperNode SE CM/SLM

At your current location

1

> **WARNING**
> **Possible loss of data recording services**
> This procedure manually busies the SLM on the same plane as the card that you replace. Make sure that the SLM on the opposite plane assumes data recording services of the SLM that you remove from service, before you attempt this procedure.

Obtain a replacement card. Make sure that the replacement card has the same PEC and the PEC suffix as the card that you will replace.

2 Perform the procedure *Verifying load compatibility of SuperNode cards* in this document. Complete the procedure and return to this point.

At the MAP terminal

3 To access the CM level of the MAP display, type

`>MAPCI;MTC;CM`

and press the Enter key.

Example of a MAP display:

```
CM  Sync  Act  CPU0  CPU1 Jam Memory CMMnt  MC  PMC
 0   no  cpu 1   .     .  yes    .     .     .   .
```

4 Determine if the SLM assembly that you replace associates with the active CPU or the inactive CPU.

Note: The active CPU appears under the Act header on the MAP display. In the example in step 3, the active CPU is CPU 1.

If the SLM assembly	Do
associates with the inactive CPU	step 5
associates with the active CPU	step 12

5 Determine if the inactive CPU is jammed.

Note: The word yes under the Jam header indicates that the inactive CPU is jammed. A blank field indicates that the CPU is not jammed.

If the inactive CPU	Do
is not jammed	step 6

NT9X62
in a SuperNode SE CM/SLM (continued)

If the inactive CPU	Do
is jammed	step 8

At the CM reset terminal for the inactive CPU

6

> **DANGER**
> **Loss of service**
> Make sure that you do not jam the active CPU. A cold restart occurs when you jam the active CPU while the CM is not in sync. The word Active on the top banner of the display identifies the reset terminal for the active CPU.

To jam the inactive CPU, type

>\JAM

and press the Enter key.

RTIF response:

```
Please confirm: (YES/NO)
```

7 To confirm the command, type

>YES

and press the Enter key.

RTIF response:

```
JAM DONE
```

At the MAP terminal

8 Determine if the CM is synchronized.

Note: A dot (.) or EccOn under the Sync header indicates that the CM is synchronized. The word no indicates that the CM is not synchronized.

If the CM	Do
is synchronized	step 9
is not synchronized	step 13

9 To drop synchronization, type

>DPSYNC

and press the Enter key.

If the response	Do
is About to drop sync with CPU n active. The inactive CPU is JAMMED. Do you want to continue? Please confirm ("YES", "Y", "NO", or "N")	step 10
is other than listed here	step 62

10 To confirm the command, type

>YES

and press the Enter key.

Example of a MAP response:

```
Maintenance action submitted.
Running in simplex mode with active CPU n.
```

At the CM reset terminal for the inactive CPU

11 Wait until A1 flashes on the reset terminal for the inactive CPU.

Note: Allow approximately 5 min for A1 to start to flash.

If A1	Do
flashes	step 13
does not flash	step 62

12 Perform the procedure *Activity switch with memory match* in this document. Complete the procedure and return to this point.

NT9X62
in a SuperNode SE CM/SLM (continued)

At the MAP terminal

13

WARNING
Loss of service
Make sure that the CM runs on the active clock of the CPU. Do not power down the the inactive side of the CM while the CM runs on the inactive CPU clock. A cold restart or system image reload can occur which results in loss of service.

To determine if the CM runs on the inactive clock of the CPU, type

>INSYNC

and press the Enter key.

Example of a MAP response:

```
CPU pair is NOT insync, CPU 0 is active.
CM is running on active CPU clock.

Memory Error Correction is ENABLED.

The Inactive CPU is Jammed.
```

If the CM	Do
runs on the incative clock of the CPU	step 14
runs on the active clock of the CPU	step 15

14 To run the CM on the active clock of the CPU, perform the procedure *Switching the clock source* in this document. Complete the procedure and return to this point.

15 To access the CMMNT level of the MAP display, type

>CMMNT

and press the Enter key.

Example of a MAP display:

NT9X62
in a SuperNode SE CM/SLM (continued)

```
CM   Sync  Act  CPU0  CPU1  Jam  Memory  CMMnt  MC  PMC
 0    no  cpu 0  .     .     yes   .       .     .    .

Traps:          Per minute =     0      Total =     5

AutoLdev:       Primary = SLM 0 DISK  Secondary =  SLM 1
DISK

Image Restartable = No image test since last restart

Next image restart type =  WARM

Last CM REXTST executed

System memory in kbytes as of  14:39:07
Memory (kbytes): Used = 105984 Avail =  12800 Total =
118784
```

16 Determine if the primary autoload device is on the same side of the switch as the active CPU or the inactive CPU.

Note: The primary autoload device appears on the right of the Primary header. In the example in step 15, the primary autoload device is the disk of SLM 0.

If the primary autoload device	Do
is on the same side of the switch as the active CPU	step 18
is on the side of the same side of the switch as the inactive CPU	step 17

17 To change the primary autoload device to a device on the same side of the switch as the active CPU, type

>AUTOLD SLM slm_number device_type

and press the Enter key.

where

slm_number
is the number of the active CPU (0 or 1)

device_type
is the type of SLM device (DISK or TAPE)

Example of a MAP response:

```
New autoload route has been set.
```

NT9X62
in a SuperNode SE CM/SLM (continued)

18 To access the SLM that corresponds to the inactive CPU, type

>IOD;SLM slm_number

and press the Enter key.

where

slm_number
is the number of the inactive CPU (0 or 1)

Example of a MAP display:

```
IOD
IOC  0  1  2  3
STAT .  .  .  .

DIRP:  .   XFER:  .   DVI :  .   DPPP:  .   DPPU:  .
NOP :  .   SLM :  .   NX25:  .   MLP :  .   SCAI:  .

SLM   0  1
Stat  .  .

SLM 0       device      TAPE        DISK
            status        .           .
            drive       idle        on line
            user                    SYSTEM
```

Note: Dots on the right of the SLM Stat header indicate that the associated SLMs are in service.

19 To manually busy the SLM, type

>BSY

and press the Enter key.

Example of a MAP response:

```
SLM 0 busy passed.
```

Example of a MAP display:

```
SLM   0  1
Stat  M  .
```

Note: The letter M on the right of the SLM Stat header indicates that the associated SLM is manual busy.

20 To access the PMC level of the MAP display, type

>CM;PMC

and press the Enter key.

Example of a MAP display:

NT9X62
in a SuperNode SE CM/SLM (continued)

```
                PMC 0
                  .

 PORT0:     .
 PORT1:     .
```

21 To manually busy the port that corresponds to the inactive CPU, type

>BSY 0 PORT port_number

and press the Enter key.

where

port_number
is the number of the inactive CPU (0 or 1)

Example input

>BSY 0 PORT 0

Example of a MAP response:

```
Maintenance action submitted.
Passed.
```

22 To offline the SLM, type

>OFFL

and press the Enter key.

Note: Wait for the light on the faceplate of the SLM to turn off before you continue this procedure.

Example of a MAP response:

```
SLM 0 now offline. Do not remove SLM card
until disk drive is spun down! This will be
indicated when the SLM card light turns off.
```

23 To access the MC level of the MAP display, type

>MC

and press the Enter key.

Example of a MAP display:

```
MC 0    MC 1
  .       .
```

Note: In the preceding example, dots under the MC headers indicate that the associated MCs are in service.

NT9X62
in a SuperNode SE CM/SLM (continued)

24 Determine the state of the message controller (MC) on the inactive CPU.

Note: The term mbsy under the MC header indicates that the MC is manual busy.

If the state of the MC	Do
is `mbsy`	step 26
is not `mbsy`	step 25

25

WARNING
Possible loss of service
Make sure that you do not manually busy the MC that corresponds to the active CPU. Do not power down the inactive CPU plane with the MC that associates with the active busied CPU. This action causes a warm restart.

To manually busy the MC that corresponds to the inactive CPU, type

`>BSY mc_ number`

and press the Enter key.

where

mc_number
is the number of the inactive CPU (0 or 1)

Example of a MAP response:

```
Maintenance action submitted.
MC busied OK.
```

If the MC	Do
busied	step 26
did not busy	step 62

NT9X62
in a SuperNode SE CM/SLM (continued)

At the CM/SLM shelf

26

WARNING
Static electricity damage
Wear a wrist strap that connects to the wrist-strap grounding point of a frame supervisory panel (FSP) to handle circuit cards. The wrist strap protects the cards against static electricity damage.

To power down the inactive CPU plane, press down and release the power switch on the faceplate of the NTDX15 power converter.

Note: For CPU 0, the NTDX15 power converter is in slots 4F to 6F. For CPU 1, the NTDX15 power converter is in slots 33F to 35F.

27 Locate the card on the shelf.

28

DANGER
Do not hold card by levers only
If you hold a card only by the levers, you can break the levers. When you pull the card half way out of the shelf, carefully grasp the card below for more support. While you continue to remove the card from the shelf, make sure that you do not touch any wires or internal parts on the card.

Open the locking levers on the card that you will replace.

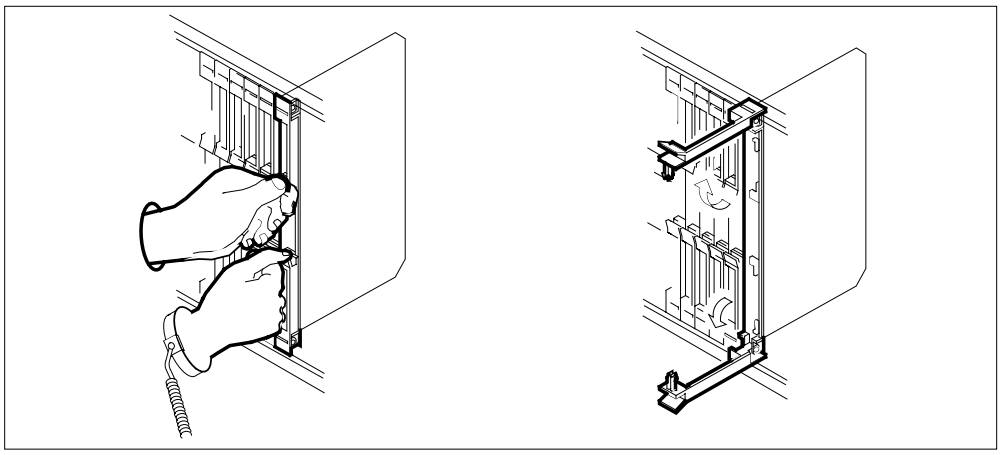

NT9X62
in a SuperNode SE CM/SLM (continued)

29

DANGER
Damage to fiber cables
When you handle fiber cables, make sure you do not crimp or bend fiber cables to a radius of less than 25 mm (1 in.).

Label each fiber cable. Use Transmit for the top cable and Receive for the bottom cable.

30 Disconnect the fiber cables from the faceplate of the card, as follows:

a Loosen the fiber connections with the locking levers open.

b Carefully push in and turn the fiber cable connector counterclockwise halfway until the connector slides out of the receptacle.

Note: Refer to the following diagram.

NT9X62
in a SuperNode SE CM/SLM (continued)

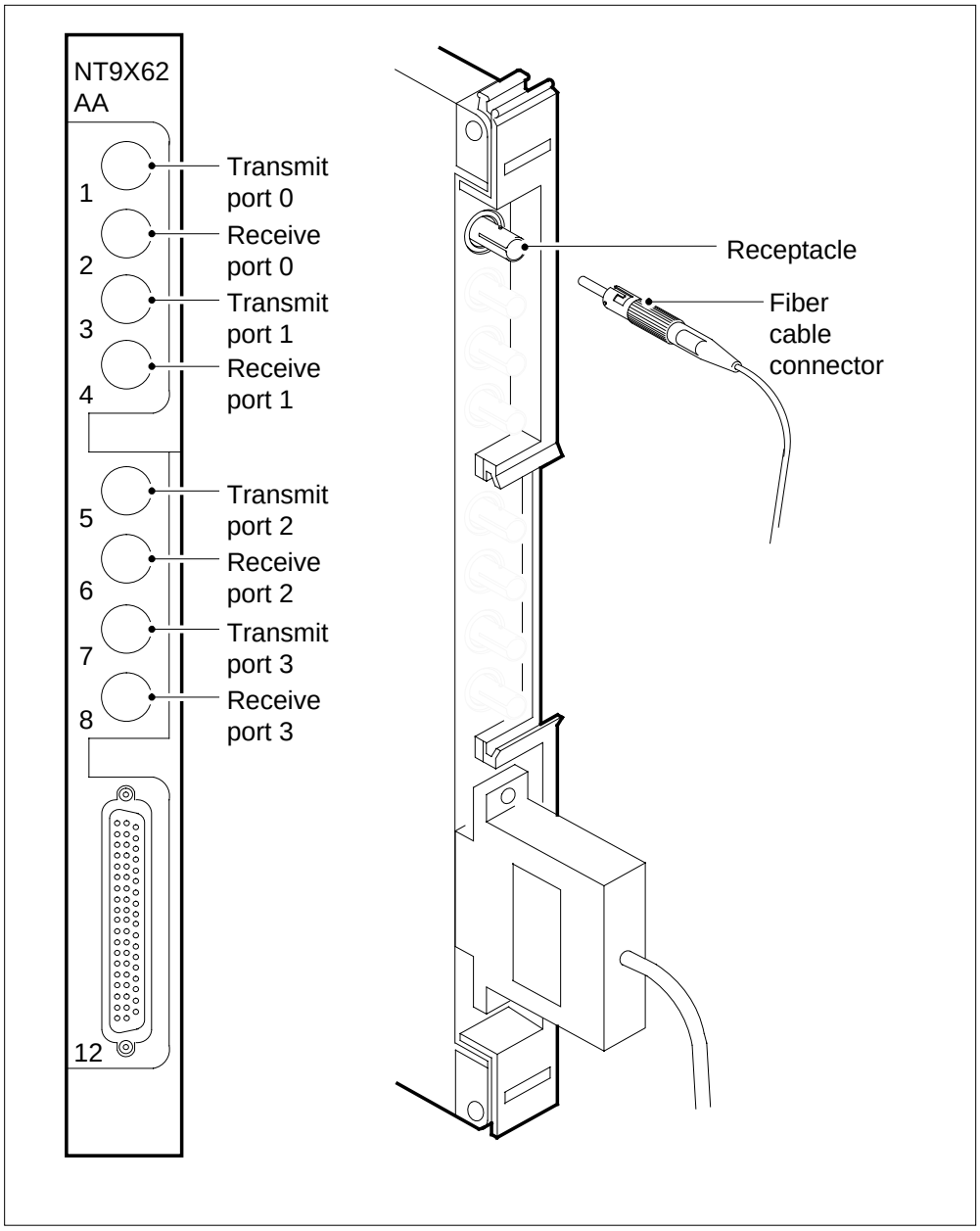

31 While you grasp the locking levers, carefully pull the card toward you until the card protrudes approximately 2 in. (5.1 cm) from the equipment shelf.

NT9X62
in a SuperNode SE CM/SLM (continued)

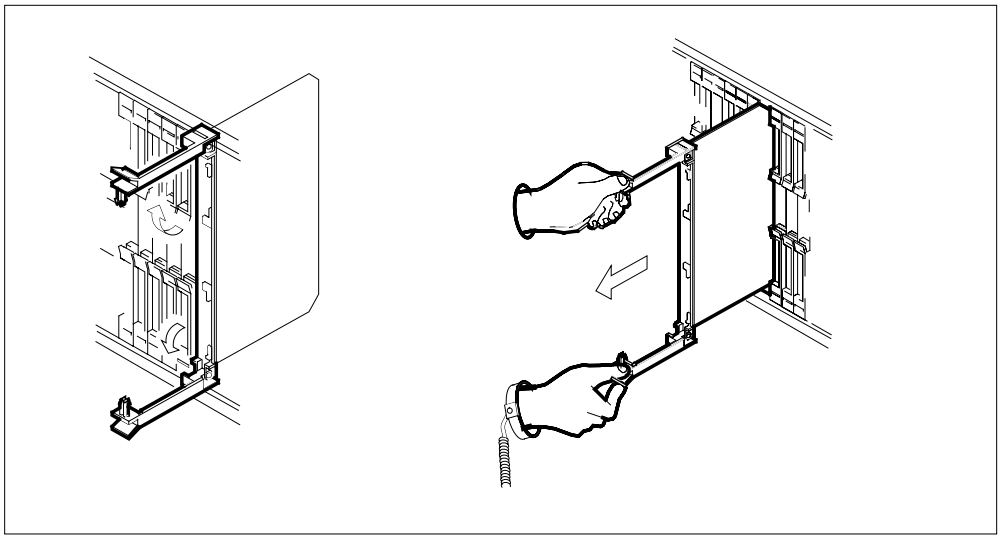

32 Hold the card by the faceplate with one hand while you support the bottom edge with the other hand. Carefully pull the card toward you until the card is clear of the shelf.

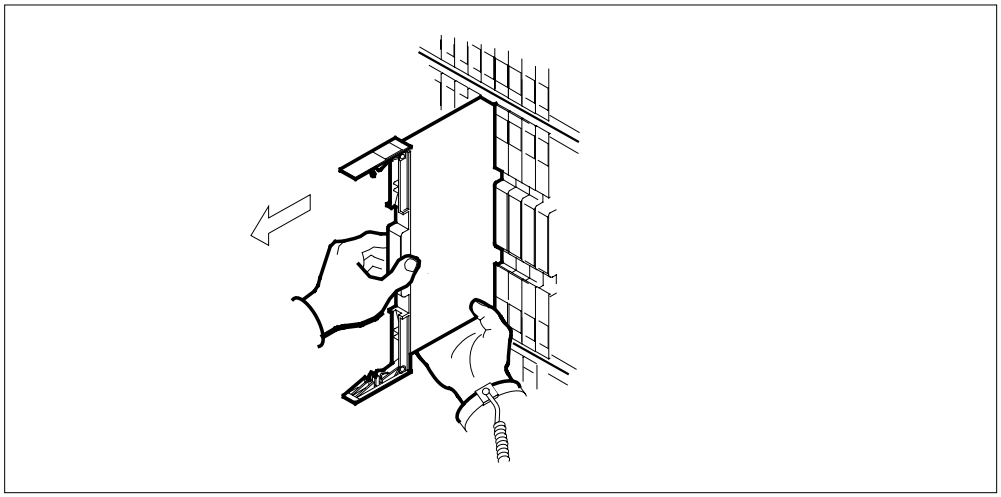

33 Place the card that you removed in an electrostatic discharge (ESD) protective container.

34 Make sure that the replacement card has the same PEC and PEC suffix as the card that you just removed.

35 Insert the replacement card into the shelf, as follows.

- **a** Open the locking levers on the card.
- **b** Hold the card by the faceplate with one hand while you support the bottom edge with the other hand. Carefully slide the card into the shelf.

NT9X62
in a SuperNode SE CM/SLM (continued)

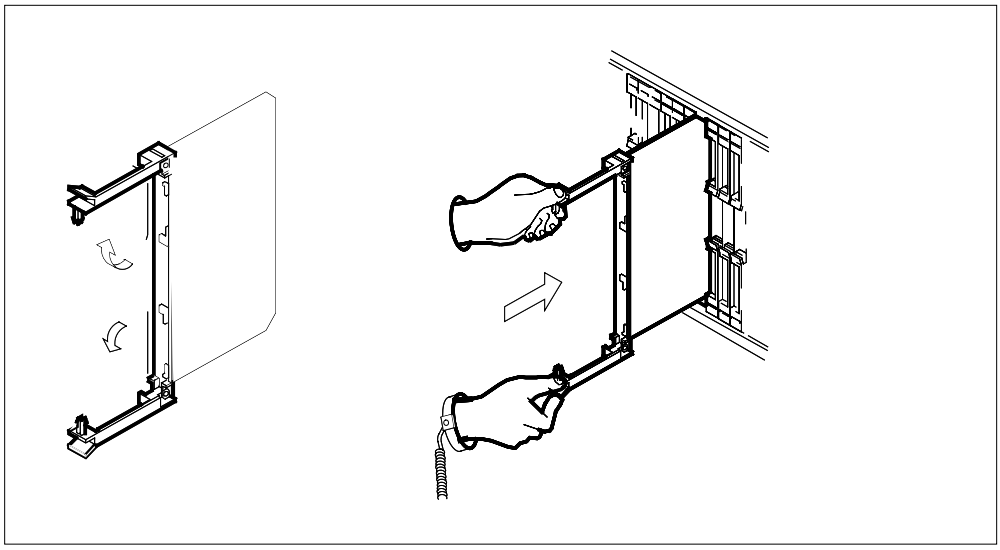

36

DANGER
Damage to fiber cable
When you handle fiber cables, make sure that you do not crimp or bend fiber cables to a radius of less than 25 mm (1 in.).

Connect the fiber cables, as follows:

a Tighten the cable connections with the locking levers open.

b Carefully guide the cable connector into the receptacle notches.

c Push in and turn the cable connector clockwise halfway until the connection is secure.

37 Seat and lock the card.

a Use your fingers or thumbs to push on the upper and lower edges of the faceplate. Make sure that the card sits completely in the shelf.

b Close the locking levers to secure the card.

NT9X62
in a SuperNode SE CM/SLM (continued)

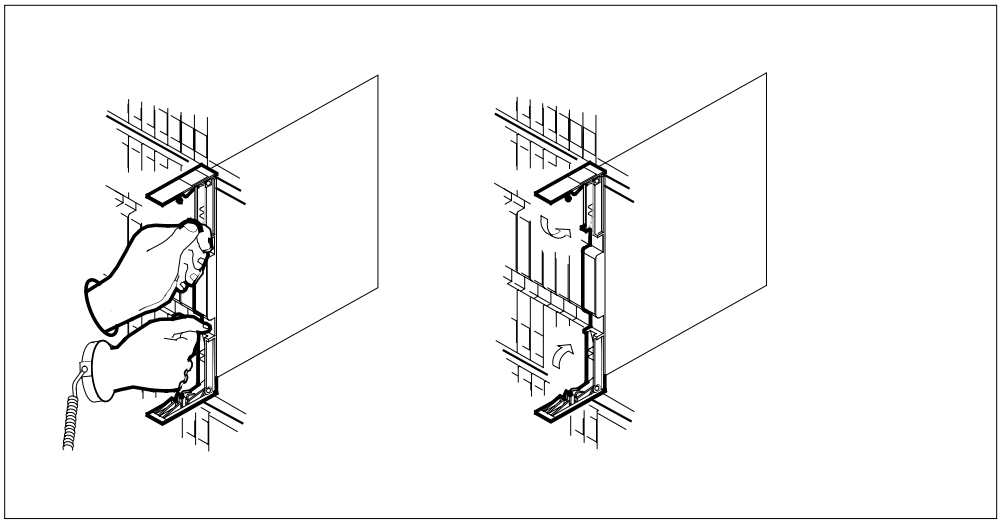

38 To power up the inactive CPU plane, lift and release the power switch located on the faceplate of the NTDX15 power converter.

Note: For CPU 0, the NTDX15 power converter is in slots 4F to 6F. For CPU 1, the power converter is in slots 33F to 35F.

At the CM reset terminal for the inactive CPU

39

WARNING
You must complete the firmware tests
If you do not complete the firmware tests, the CPUs cannot synchronize.

Wait for the switch to complete firmware tests.

Example of an RTIF response:

```
Testing Memory:
Shelf    Slot       PEC Module Status
 00       15       NT9X14EA ......
 00       16       NT9X14EA ......
Waiting for activity...
```

Note: When firmware testing is in progress, dots appear on the right side of the PEC in the firmware testing status line of the RTIF response. As each firmware test is complete, another dot appears until firmware testing for the card is complete. If the dots do not continue to appear and another firmware testing status line does not appear, firmware tests stop. If the

NT9X62
in a SuperNode SE CM/SLM (continued)

dots do not appear and the prompt Waiting for activity does not appear, firmware tests stop.

40 Determine if the firmware tests completed.

Note: If the firmware tests completed and the CPU powered up, the Waiting for activity message appears.

If the inactive CPU	Do
powered up	step 41
did not power up	step 62

At the MAP terminal

41 To access the PMC level of the MAP display, type

`>CM;PMC`

and press the Enter key.

42 To return the manual busy PMC port to service, type

`>RTS 0 PORT port_number`

and press the Enter key.

where

port_number
is the number of the inactive CPU (0 or 1)

Example of a MAP response:

```
Maintenance action submitted.
Passed.
```

If the RTS command	Do
passed	step 43
failed	step 62

43 To access the SLM that associates with the card that you replaced, type

`>IOD;SLM slm_number`

and press the Enter key.

where

slm_number
is the number of the SLM (0 or 1)

44 To manually busy the SLM, type

`>BSY`

and press the Enter key.

NT9X62
in a SuperNode SE CM/SLM (continued)

Example of a MAP response:

```
SLM 0 busy passed.
```

If the BSY command	Do
passed	step 45
failed	step 62

45 To spin up the SLM disk, type

>SPIN UP

and press the Enter key.

Note: Wait for the light on the faceplate of the SLM to turn on before you continue this procedure.

Example of a MAP response:

```
Disk of SLM 0 is  ready.
```

46 To test the SLM, type

>TST

and press the Enter key.

Example of a MAP response:

```
Minimum SLM 0 tests passed.
```

If the TST command	Do
passed	step 49
failed, and the system generated a card list	step 47
is other than listed here	step 62

47 Record the location, description, slot number, PEC and PEC suffix of the first card on the list.

48 To replace each card on the list, perform the appropriate card replacement procedure in this document. Complete the procedure and return to this point.

49 To return the SLM to service, type

>RTS

and press the Enter key.

Example of a MAP response:

```
SLM 0 return to service passed.
```

If the RTS command	Do
passed	step 50
failed	step 62

50 Your next step depends on the reason that you perform this procedure.

If you	Do
perform this procedure as a result of a MC Tbl alarm	step 54
perform this procedure as a result of a PMCFlt alarm	step 54
perform this procedure as a result of a NoTOD alarm	step 54
perform this procedure as a result of a SBsyMC alarm	step 54
perform this procedure as a result of a MBsyMC alarm	step 54
perform this procedure as a result of a CBsyMC alarm	step 54
perform this procedure for any reason other than listed here	step 51

At the MAP terminal

51 To access the MC level of the MAP display, type

`>CM;MC`

and press the Enter key.

52 To return the manual busy MC to service, type

`>RTS mc_number`

and press the Enter key.

where

mc_number
is the number of the manual busy MC (0 or 1)

Example of a MAP response:

NT9X62
in a SuperNode SE CM/SLM (continued)

```
Maintenance action submitted.
MC RTS ok.
```

If the RTS command	Do
passed	step 53
failed	step 62

53 The next action depends on the reason that you perform this procedure.

If you	Do
perform the procedure as a result of a CM alarm clearing procedure	step 54
perform the procedure for any reason other than listed here	step 55

54 Return to the alarm clearing procedure that directed you to this procedure and continue as directed.

55 To access the CM level of the MAP display, type

>CM

and press the Enter key.

56 To test the inactive CPU, type

>TST

and press the Enter key.

Example of a MAP response:

```
The test(s) listed below will destroy
the software load in inactive CPU:

    Static RAM test

Do you want to do the test(s) anyway?
Please confirm: (”YES”, ”Y”, ”NO”, or ”N”):
```

57 To confirm the command, type

>YES

and press the Enter key.

Example of a MAP response:

```
Maintenance action submitted.
Test passed.
```

If the TST command	Do
passed	step 58
is other than listed here	step 62

At the CM reset terminal for the inactive CPU

58 To release the jam on the inactive CPU, type

>\RELEASE JAM

and press the Enter key.

RTIF response:

```
JAM RELEASE DONE
```

At the MAP terminal

59 To synchronize the CM, type

>SYNC

and press the Enter key.

Example of a MAP response:

```
Maintenance action submitted.
Synchronization successful.
```

If the response	Do
indicates the SYNC command was successful	step 60
indicates the command was other than listed here	step 62

60 The next action depends on the reason that you perform this procedure.

If you	Do
perform this procedure as a result of another maintenance procedure	step 61
perform this procedure for any reason other than listed here	step 63

NT9X62
in a SuperNode SE CM/SLM (end)

61 Return to the maintenance procedure that directed you to this procedure and continue as directed.

62 For additional help, contact the next level of support.

63 The procedure is complete.

Power converter cards in a SuperNode SE CM/SLM

Application

Use this procedure to replace the following cards in a SuperNode SE (SNSE) computing module (CM) or system load module (SLM).

PEC	Suffix	Card name	Shelf or frame name
NT9X91	AA	Storage device power converter	CM/SLM
NTDX15	AA, AB	Global power converter ±5V	CM/SLM

Refer to the “Index", if you cannot identify the following features for the card you want to replace:

- product engineering code (PEC)
- PEC suffix
- provisioned shelf
- provisioned frame

The “Index" contains a list of the cards, shelves, and frames documented in this card replacement book.

Common procedures

This procedure refers to the following common procedures:

- *Activity switch with memory match*
- *Replacing a card*
- *Switching the clock source*
- *Verifying load compatibility of SuperNode cards*

Do not go to the common procedure unless the step-action procedure directs you.

Action

This procedure contains a summary flowchart and a list of steps. Use the flowchart to review the procedure. Follow the steps to perform the procedure.

Power converter cards in a SuperNode SE CM/SLM (continued)

Summary of replacing Power converter cards in a SuperNode SE CM/SLM

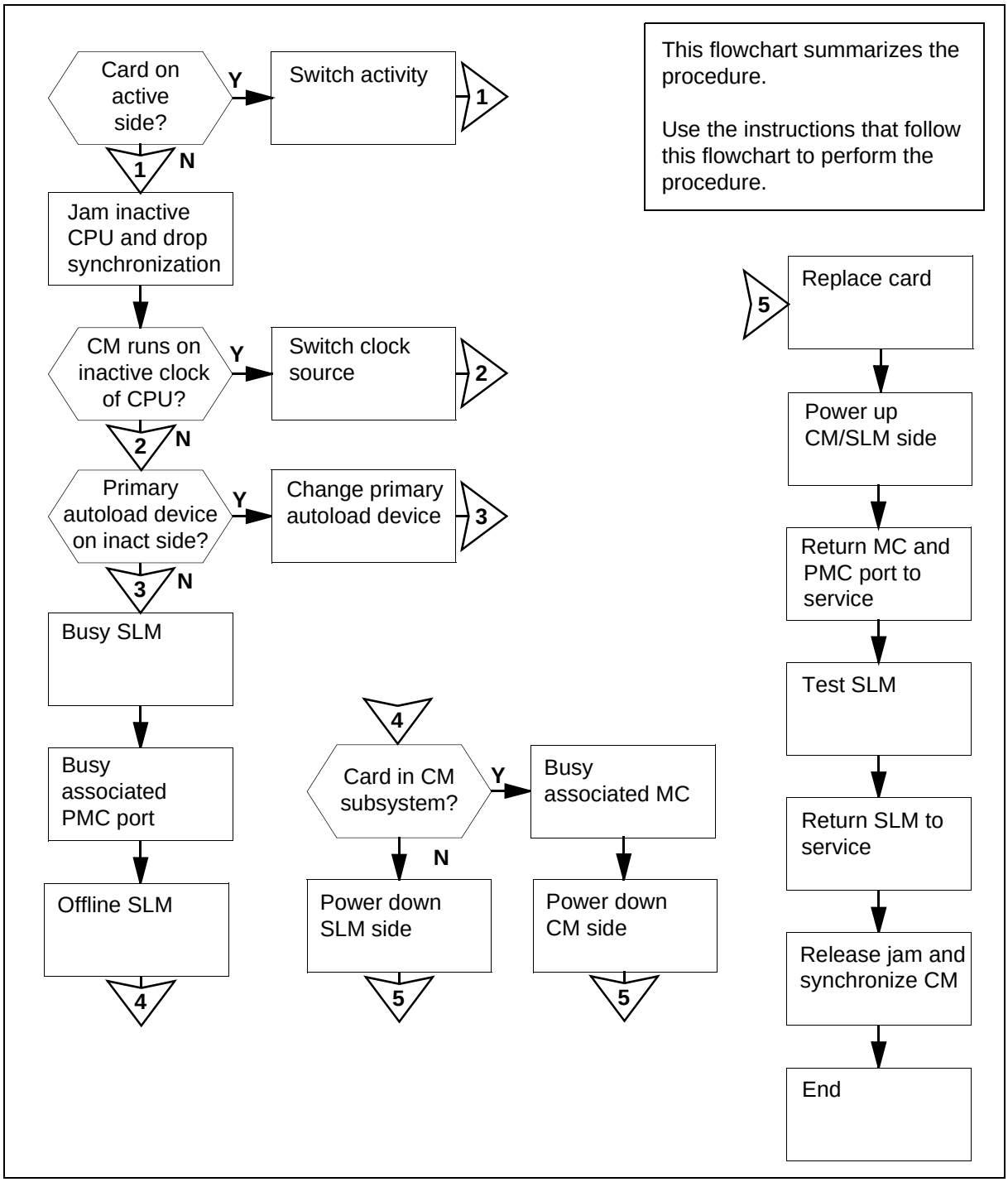

Power converter cards in a SuperNode SE CM/SLM (continued)

Replacing Power converter cards in a SuperNode SE CM/SLM

At your current location

1

> **WARNING**
> **Possible loss of data recording services**
> This procedure manually busies the SLM on the same plane as the card you will replace. Make sure that the SLM on the opposite plane from the card you replace assumes data recording services, before you attempt this procedure.

Obtain a replacement card. Make sure that the replacement card has the same PEC and PEC suffix as the card that you will replace.

2 Perform the procedure *Verifying load compatibility of SuperNode cards* in this document. Complete the procedure and return to this point.

At the MAP terminal

3 To access the CM level of the MAP display, type

`>MAPCI;MTC;CM`

and press the Enter key.

Example of a MAP display:

```
CM  Sync  Act  CPU0  CPU1 Jam Memory CMMnt  MC  PMC
 0   no  cpu 1   .     .  yes    .     .     .   .
```

4 Determine if the SLM assembly that you will replace associates with the active CPU or the inactive CPU.

Note: The active CPU appears under the Act header on the MAP display. In the example in step 3, the active CPU is CPU 1.

If the SLM assembly	Do
associates with the inactive CPU	step 5
associates with the active CPU	step 12

Power converter cards in a SuperNode SE CM/SLM (continued)

5 Determine if the inactive CPU is jammed.

Note: The word yes under the Jam header indicates that the inactive CPU is jammed. A blank field indicates that the CPU is not jammed.

If the inactive CPU	Do
is not jammed	step 8
is jammed	step 6

At the CM reset terminal for the inactive CPU

6

DANGER
Loss of service
Make sure that you do not jam the active CPU. A cold restart occurs when you jam the active CPU while the CM is not in sync. The word Active on the top banner of the display identifies the reset terminal for the active CPU.

To jam the inactive CPU, type

>\JAM

and press the Enter key.

RTIF response:

```
Please confirm: (YES/NO)
```

7 To confirm the command, type

>YES

and press the Enter key.

RTIF response:

```
JAM DONE
```

At the MAP terminal

8 Determine if the CM is synchronized.

Note: A dot (.) or EccOn under the Sync header indicates that the CM is synchronized. The word no indicates that the CM is not synchronized.

If the CM	Do
is synchronized	step 9

Power converter cards in a SuperNode SE CM/SLM (continued)

If the CM	Do
is not synchronized	step 13

9 To drop synchronization, type

>DPSYNC

and press the Enter key.

If the response	Do
is About to drop sync with CPU n active. The inactive CPU is JAMMED. Do you want to continue? is Please confirm ("YES", "Y", "NO", or "N"):	step 10
is other than listed here	step 58

10 To confirm the command, type

>YES

and press the Enter key.

Example of a MAP response:

```
Maintenance action submitted.
Running in simplex mode with active CPU n.
```

At the CM reset terminal for the inactive CPU

11 Wait until A1 flashes on the reset terminal for the inactive CPU.

Note: Allow approximately 5 min for A1 to start to flash.

If A1	Do
flashes	step 13
does not flash	step 58

12 Perform the procedure *Activity switch with memory match* in this document. Complete the procedure and return to this point.

Power converter cards in a SuperNode SE CM/SLM (continued)

At the MAP terminal

13

> **WARNING**
> **Loss of service**
> Make sure that the CM runs on the active clock of the CPU. Do not power down the inactive side of the CM while the CM runs on the clock of the inactive CPU. A cold restart or system image reload can occur which results in loss of service.

To determine if the CM runs on the inactive clock of the CPU, type

`>INSYNC`

and press the Enter key.

Example of a MAP response:

```
CPU pair is NOT insync, CPU 0 is active.
CM is running on active CPU clock.

Memory Error Correction is ENABLED.

The Inactive CPU is Jammed.
```

If the CM	Do
runs on the inactive clock of the CPU	step 14
runs on the active clock of the CPU	step 15

14 To run the CM on the active clock of the CPU, perform the procedure *Switching the clock source* in this document. Complete the procedure and return to this point.

15 To access the CMMNT level of the MAP display, type

`>CMMNT`

and press the Enter key.

Example of a MAP display:

Power converter cards in a SuperNode SE CM/SLM (continued)

```
CM   Sync  Act  CPU0  CPU1  Jam  Memory  CMMnt  MC  PMC
 0    no  cpu 0  .     .     yes   .       .     .    .

Traps:          Per minute =     0      Total =     5

AutoLdev:       Primary = SLM 0 DISK  Secondary =  SLM 1
DISK

Image Restartable = No image test since last restart

Next image restart type =  WARM

Last CM REXTST executed

System memory in kbytes as of  14:39:07
Memory (kbytes): Used = 105984 Avail =  12800 Total =
118784
```

16 Determine if the primary autoload device is on the same side of the switch as the active CPU or the inactive CPU.

Note: The primary autoload device appears on the right of the Primary header. In the example in step 15, the primary autoload device is the disk of SLM 0.

If the primary autoload device	Do
is on the same side of the switch as the active CPU	step 18
is on the same side of the switch as the inactive CPU	step 17

17 To change the primary autoload device to a device on the same side of the switch as the active CPU, type

`>AUTOLD SLM slm_number device_type`

and press the Enter key.

where

slm_number
is the number of the active CPU (0 or 1)

device_type
is the type of SLM device (DISK or TAPE)

Example of a MAP response:

```
New autoload route has been set.
```

18 To access the SLM that corresponds to the inactive CPU, type

`>IOD;SLM slm_number`

and press the Enter key.

Power converter cards in a SuperNode SE CM/SLM (continued)

where

slm_number
is the number of the inactive CPU (0 or 1)

Example of a MAP display:

```
IOD
IOC  0  1  2  3
STAT .  .  .  .

DIRP:  .   XFER:  .   DVI :  .   DPPP:  .   DPPU:  .
NOP :  .   SLM :  .   NX25:  .   MLP :  .   SCAI:  .

SLM   0  1
Stat  .  .

SLM 0       device      TAPE        DISK
            status        .           .
            drive       idle        on line
            user                    SYSTEM
```

Note: Dots on the right of the SLM Stat header indicate that the associated SLMs are in service.

19 To manually busy the SLM, type

>BSY

and press the Enter key.

Example of a MAP response:

```
SLM 0 busy passed.
```

Example of a MAP display:

```
SLM   0  1
Stat  M  .
```

Note: The letter M on the right of the SLM Stat header indicates that the associated SLM is manual busy.

20 To access the PMC level of the MAP display, type

>CM;PMC

and press the Enter key.

Example of a MAP display:

Power converter cards in a SuperNode SE CM/SLM (continued)

```
          PMC 0
            .

PORT0:      .
PORT1:      .
```

21 To manually busy the port that corresponds to the inactive CPU, type

>BSY 0 PORT port_number

and press the Enter key.

where

port_number
is the number of the inactive CPU (0 or 1)

Example input

>BSY 0 PORT 0

Example of a MAP response:

```
Maintenance action submitted.
Passed.
```

22 To offline the SLM, type

>OFFL

and press the Enter key.

Note: Wait for the light on the faceplate of the SLM to turn off before you continue this procedure.

Example of a MAP response:

```
SLM 0 now offline. Do not remove SLM card
until disk drive is spun down! This will be
indicated when the SLM card light turns off.
```

23 The next action depends on if the card that you replaced is part of the CM subsystem or the SLM subsystem.

If the card	Do
is part of the CM subsystem (NT9X15)	step 24
is part of the SLM subsystem (NTDX91)	step 31

24 To access the message controller (MC) level of the MAP display, type

>MC

and press the Enter key.

Power converter cards in a SuperNode SE CM/SLM (continued)

Example of a MAP display:

```
MC 0    MC 1
  .       .
```

Note: In the example, dots under the MC headers indicate that the associated MCs are in service.

25 Determine the state of the MC on the inactive CPU.

Note: The term mbsy under the MC header means that the MC is manual busy.

If the state of the MC	Do
is `mbsy`	step 27
is not `mbsy`	step 26

26

WARNING
Possible loss of service
Make sure that you do not manually busy the MC that corresponds to the active CPU. Do not power down the inactive CPU plane with the MC that associates with the active busied CPU. This action will cause a warm restart.

To manually busy the MC that corresponds to the inactive CPU, type

`>BSY mc_ number`

and press the Enter key.

where

mc_number
is the number of the inactive CPU (0 or 1)

Example of a MAP response:

```
Maintenance action submitted.
MC busied OK.
```

If the MC	Do
busied	step 27
did not busy	step 58

Power converter cards in a SuperNode SE CM/SLM (continued)

At the CM/SLM shelf

27

WARNING
Static electricity damage
Wear a wrist strap that connects to the wrist-strap grounding point of a frame supervisory panel (FSP) to handle circuit cards. The wrist strap protects the cards against static electricity damage.

To power down the inactive CPU plane, press down and release the power switch on the faceplate of the NTDX15 power converter.

Note: For CPU 0, the NTDX15 power converter is in slots 4F to 6F. For CPU 1, the NTDX15 power converter is in slots 33F to 35F.

28 Perform the procedure *Replacing a card* in this document. Complete the procedure and return to this point.

29 To power up the inactive CPU plane, lift and release the power switch located on the faceplate of the NTDX15 power converter.

Note: For CPU 0, the NTDX15 power converter is in slots 4F to 6F. For CPU 1, the power converter is in slots 33F to 35F.

30 Go to step 34.

Power converter cards in a SuperNode SE CM/SLM (continued)

At the CM/SLM shelf

31

DANGER
Equipment damage and possible loss of service
Make sure that you do not switch off the NTDX15 power converter. If you switch off the NTDX15 power converter, the associated CPU plane powers down. The SLM does not power down. The NT9X91 power converter powers the SLM.

WARNING
Static electricity damage
Wear a wrist strap that connects to the wrist-strap grounding point of a frame supervisory panel (FSP) to handle circuit cards. The wrist strap protects the cards against static electricity damage.

Power down the inactive SLM side. Press down and release the power switch located on the faceplate of the converter to switch off the NT9X91 power converter.

Note: For CPU 0, NT9X91 the power converter is in slots 1F to 3F. For CPU 1, the NT9X91 power converter is in slots 36F to 38F.

32 Perform the procedure *Replacing a card* in this document. Complete the procedure and return to this point.

33 Lift and release the power switch on the faceplate of the NT9X91 power converter to power up the inactive SLM side.

Note: For plane 0, the power converter is in slots 1F to 3F. For plane 1, the power converter is in slots 36F to 38F.

At the CM reset terminal for the inactive CPU

34

WARNING
You must complete the firmware tests
If you do not complete the firmware tests, the CPUs cannot synchronize.

Wait for the switch to complete firmware tests.

Example of an RTIF response:

Power converter cards in a SuperNode SE CM/SLM (continued)

```
Testing Memory:
Shelf    Slot       PEC Module Status
 00       15       NT9X14EA ......
 00       16       NT9X14EA ......
Waiting for activity...
```

Note: When firmware testing is in progress, dots appear on the right of the PEC in the firmware testing status line of the RTIF response. As each firmware test is complete, another dot appears until firmware testing for the card is complete. If the dots do not continue to appear and another firmware testing status line does not appear, firmware tests stop. If the dots do not appear and the prompt Waiting for activity does not appear, firmware tests stop.

35 Determine if the firmware tests completed.

Note: If the firmware tests completed and the CPU powered up, the Waiting for activity message appears.

If the inactive CPU	Do
powered up	step 36
did not power up	step 58

At the MAP terminal

36 To access the PMC level of the MAP display, type

`>CM;PMC`

and press the Enter key.

37 To return the manual busy PMC port to service, type

`>RTS 0 PORT port_number`

and press the Enter key.

where

port_number
is the number of the inactive CPU (0 or 1)

Example of a MAP response:

```
Maintenance action submitted.
Passed.
```

If the RTS command	Do
passed	step 38
failed	step 58

Power converter cards in a SuperNode SE CM/SLM (continued)

38 To access the SLM that associates with the card that you replaced, type

>IOD;SLM slm_number

and press the Enter key.

where

slm_number
is the number of the SLM (0 or 1)

39 To manually busy the SLM, type

>BSY

and press the Enter key.

Example of a MAP response:

```
SLM 0 busy passed.
```

If the BSY command	Do
passed	step 40
failed	step 58

40 To spin up the SLM disk, type

>SPIN UP

and press the Enter key.

Note: Wait for the light on the faceplate of the SLM to turn on before you continue this procedure.

Example of a MAP response:

```
Disk of SLM 0 is  ready.
```

41 To test the SLM, type

>TST

and press the Enter key.

Example of a MAP response:

```
Minimum SLM 0 tests passed.
```

If the TST command	Do
passed	step 44
failed, and the system generated a card list	step 42
is other than listed here	step 58

Power converter cards in a SuperNode SE CM/SLM (continued)

42 Record the location, description, slot number, PEC and PEC suffix of the first card on the list.

43 To replace each card on the list, perform the appropriate card replacement procedure in this document. Complete the procedure and return to this point.

44 To return the SLM to service, type

>RTS

and press the Enter key.

Example of a MAP response:

```
SLM 0 return to service passed.
```

If the RTS command	Do
passed	step 45
failed	step 58

45 The next action depends on if the card that you replaced is part of the CM subsystem or the SLM subsystem.

If the card	Do
is part of the CM subsystem (NT9X91)	step 46
is part of the SLM subsystem (NTDX15)	step 54

46 Your next step depends on the reason that you perform this procedure.

If you	Do
perform this procedure as a result of a MC Tbl alarm	step 50
perform this procedure as a result of a PMCFlt alarm	step 50
perform this procedure as a result of a NoTOD alarm	step 50
perform this procedure as a result of a SBsyMC alarm	step 50
perform this procedure as a result of a MBsyMC alarm	step 50
perform this procedure as a result of a CBsyMC alarm	step 50
perform this procedure for any reason other than listed here	step 47

Power converter cards in a SuperNode SE CM/SLM (continued)

At the MAP terminal

47 To access the MC level of the MAP display, type

>CM;MC

and press the Enter key.

48 To return the manual busy MC to service, type

>RTS mc_number

and press the Enter key.

where

mc_number
is the number of the manual busy MC (0 or 1)

Example of a MAP response:

```
Maintenance action submitted.
MC RTS ok.
```

If the RTS command	Do
passed	step 49
failed	step 58

49 The next action depends on the reason that you perform this procedure.

If you	Do
perform this procedure as a result of a CM alarm clearing procedure	step 50
performed this procedure for any reason other than listed here	step 51

50 Return to the alarm clearing procedure that directed you this procedure and continue as directed.

51 To access the CM level of the MAP display, type

>CM

and press the Enter key.

52 To test the inactive CPU, type

>TST

and press the Enter key.

Example of a MAP response:

Power converter cards in a SuperNode SE CM/SLM (continued)

```
The test(s) listed below will destroy
the software load in inactive CPU:

    Static RAM test

Do you want to do the test(s) anyway?
Please confirm: ("YES", "Y", "NO", or "N"):
```

53 To confirm the command, type

>YES

and press the Enter key.

Example of a MAP response:

```
Maintenance action submitted.
Test passed.
```

If the TST command	Do
passed	step 54
is other than listed here	step 58

At the CM reset terminal for the inactive CPU

54 To release the jam on the inactive CPU, type

>\RELEASE JAM

and press the Enter key.

RTIF response:

```
JAM RELEASE DONE
```

At the MAP terminal

55 To synchronize the CM, type

>SYNC

and press the Enter key.

Example of a MAP response:

```
Maintenance action submitted.
Synchronization successful.
```

If the response	Do
indicates the SYNC command was successful	step 56

Power converter cards in a SuperNode SE CM/SLM (end)

If the response	Do
is other than listed here	step 58

56 The next action depends on the reason that you perform this procedure.

If you	Do
perform this procedure for another maintenance procedure	step 57
perform this procedure for any reason other than listed here	step 59

57 Return to the maintenance procedure that directed you to this procedure and continue as directed.

58 For additional help, contact the next level of support.

59 The procedure is complete.

Replace system cards in a SuperNode SE CM/SLM

Application

Use this procedure to replace the following cards in a Supernode SE computing module (CM) or system load module (SLM).

PEC	Suffix	Card Name	Shelf or frame name
NT9X10	AA	33-MHz 88100 BRISC CPU card	CM/SLM
NT9X10	BA, CA	60-MHz 88100 BRISC CPU card	CM/SLM
NT9X12	AA, AB, AC, AD	CPU port card	CM/SLM
NT9X13	MA, MB	Supernode SE core processor card	CM/SLM
NT9X14	DB	24-Mbyte memory card	CM/SLM
NT9X14	EA	96-Mbyte memory card	CM/SLM
NT9X21	AA	CM-bus terminator paddle board	CM/SLM
NT9X21	AB	Bus terminator paddle board	CM/SLM
NT9X26	AB, CA	Remote terminal interface paddle (RTIF) board	CM/SLM
NT9X26	DA, DB, DC, EA, FA	BRISC RTIF paddle board	CM/SLM
NT9X86	AA/AB	Dual-port message controller card	CM/SLM

Refer to the “Index", if you cannot identify the following features for the card that you want to replace:

- product engineering code (PEC)
- PEC suffix

Replace system cards in a SuperNode SE CM/SLM (continued)

- provisioned shelf
- provisioned frame

The “Index" contains a list of the cards, shelves, and frames documented in this card replacement book.

Common procedures

This procedure refers to the following common procedures:

- *Activity switch with memory match*
- *Replacing a card*
- *Switching the clock source*
- *Verifying load compatibility of SuperNode cards*

Do not go to the common procedure unless the step-action procedure directs you.

Action

This procedure contains a summary flowchart and a list of steps. Use the flowchart to review the procedure. Follow the steps to perform the procedure.

Replace system cards in a SuperNode SE CM/SLM (continued)

Summary of Replace system cards in a SuperNode SE CM/SLM

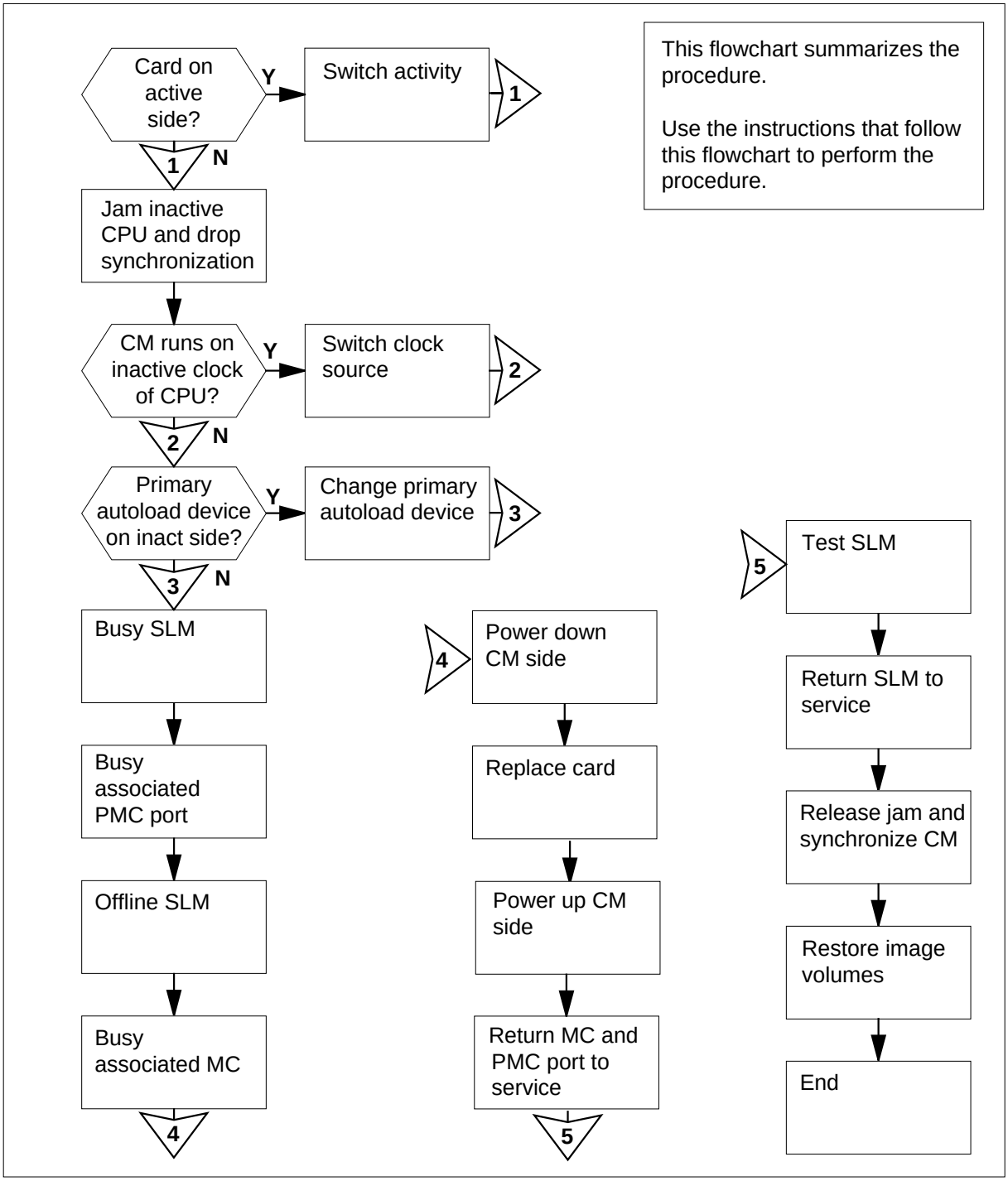

Replace system cards in a SuperNode SE CM/SLM (continued)

Replace system cards in a SuperNode SE CM/SLM

At your current location

1

> **DANGER**
> **Possible loss of data recording services**
> This procedure manually busies the SLM on the same plane as the card that you replace. Make sure that the SLM on the opposite plane from the card you replace assumes data recording services, before you attempt this procedure.

> **DANGER**
> **Possible incorrect memory configuration**
> Replacement of an NT9X14DB with an NT9X14EA can result in a memory configuration that is not supported. If you replace an NT9X14DB with an NT9X14EA, contact the next level of support.

> **DANGER**
> **Possible incorrect memory configuration**
> Do not leave empty slots between memory cards or between the first memory card and a two-port message controller card. The empty slots result in a memory configuration that is not supported.

> **DANGER**
> **Possible incorrect memory configuration**
> Do not mix NT9X14DB and NT9X14EA cards. Mixed cards result in a memory configuration that is not supported. Keep NT9X14EA cards together. Place the NT9X14EA cards next to the CPU card.

Obtain a replacement card. Make sure that the replacement card has the same PEC and PEC suffix as the card that you will replace.

2 Perform the procedure *Verifying load compatibility of SuperNode cards* in this document. Complete the procedure and return to this point.

Replace system cards in a SuperNode SE CM/SLM (continued)

At the MAP terminal

3 To access the CM level of the MAP display, type

>MAPCI;MTC;CM

and press the Enter key.

Example of a MAP display:

```
CM  Sync  Act  CPU0  CPU1 Jam Memory CMMnt  MC  PMC
 0   no  cpu 1   .     .  yes    .     .     .   .
```

4 Determine if the SLM assembly that you replace associates with the active CPU or the inactive CPU.

Note: The active CPU appears under the Act header on the MAP display. In the example in step 3, the active CPU is CPU 1.

If the SLM assembly	Do
associates with the inactive CPU	step 5
associates with the active CPU	step 12

5 Determine if the inactive CPU is jammed.

Note: The word yes under the Jam header indicates that the inactive CPU is jammed. A blank field indicates that the CPU is not jammed.

If the inactive CPU	Do
is not jammed	step 6
is jammed	step 8

At the CM reset terminal (RTIF) for the inactive CPU

6

DANGER
Loss of service
Make sure that you do not jam the active CPU. A cold restart occurs when you jam the active CPU while the CPU is not in sync. The word Active on the top banner of the display identifies the reset terminal for the active CPU.

To jam the inactive CPU, type

>\JAM

and press the Enter key.

RTIF response:

Replace system cards in a SuperNode SE CM/SLM (continued)

```
Please confirm: (YES/NO)
```

7 To confirm the command, type

>YES

and press the Enter key.

RTIF response:

```
JAM DONE
```

At the MAP terminal

8 Determine if the CM is synchronized

Note: A dot (.) or EccOn under the Sync header indicates that the CM is synchronized. The word no indicates that the CM is not synchronized.

If the CM	Do
is synchronized	step 9
is not synchronized	step 13

9 To drop synchronization, type

>DPSYNC

and press the Enter key.

If the response	Do
is About to drop sync with CPU 1 active. The inactive CPU is JAMMED. Do you want to continue? Please confirm ("YES", "Y", "NO", or "N"):	step 10
is other than listed here	step 70

10 To confirm the command, type

>YES

and press the Enter key.

Example of a MAP response:

```
Maintenance action submitted.
Running in simplex mode with active CPU 1.
```

Replace system cards in a SuperNode SE CM/SLM (continued)

At the CM reset terminal (RTIF) for the inactive CPU

11 Wait until A1 flashes on the reset terminal for the inactive CPU.

Note: Allow approximately 5 min for A1 to start to flash.

If A1	Do
flashes	step 13
does not flash	step 70

12 Perform the procedure *Activity switch with memory match* in this document. Complete the procedure and return to this point.

At the MAP terminal

13

> **WARNING**
> **Loss of service**
> Make sure that the CM runs on the active clock of the CPU. Do not power down the inactive side of the CM while the CM runs on the clock of the inactive CPU. A cold restart or system image reload can occur which results in loss of service.

Determine if the CM runs on the inactive clock of the CPU, type

`>INSYNC`

and press the Enter key.

Example of a MAP response:

```
CPU pair is NOT insync, CPU 0 is active.
CM is running on active CPU clock.

Memory Error Correction is ENABLED.

The Inactive CPU is Jammed.
```

If the CM	Do
runs on the clock of the inactive CPU	step 14
runs on the clock of the active CPU	step 15

Replace system cards in a SuperNode SE CM/SLM (continued)

14 To run the CM on the clock of the active CPU, perform the procedure *Switch the clock source* in this document. Complete the procedure and return to this point.

15 To access the CMMNT level of the MAP display, type

>CMMNT

and press the Enter key.

Example of a MAP display:

```
CM   Sync  Act  CPU0  CPU1  Jam  Memory  CMMnt  MC  PMC
 0    no  cpu 0  .     .     yes   .       .     .    .

Traps:          Per minute =     0      Total =     5

AutoLdev:   Primary = SLM 0 DISK  Secondary =  SLM 1 DISK

Image Restartable = No image test since last restart

Next image restart type =  WARM

Last CM REXTST executed

System memory in kbytes as of  14:39:07
Memory (kbytes): Used = 105984 Avail =  12800 Total =
118784
```

16 Determine if the primary autoload device is on the side of the switch with the active CPU or the inactive CPU.

Note: The primary autoload device appears on the right of the Primary header. In the example in step 15, the primary autoload device is the disk of SLM 0.

If the primary autoload device	Do
is on the same side of the switch as the active CPU	step 18
is on the same side of the switch as the inactive CPU	step 17

17 To change the primary autoload device to a device on the same side of the switch as the active CPU, type

>AUTOLD SLM slm_number device_type

and press the Enter key.

where

slm_number
is the number of the active CPU (0 or 1)

device_type
is the type of SLM device (DISK or TAPE)

Replace system cards in a SuperNode SE CM/SLM (continued)

Example of a MAP response:

```
New autoload route has been set.
```

18 To access the SLM that corresponds to the inactive CPU, type

>IOD;SLM slm_number

and press the Enter key.

where

slm_number
is the number of the inactive CPU (0 or 1)

Example of a MAP display:

```
IOD
IOC  0  1  2  3
STAT .  .  .  .

DIRP:  .   XFER:  .   DVI :  .   DPPP:  .   DPPU:  .
NOP :  .   SLM :  .   NX25:  .   MLP :  .   SCAI:  .

SLM   0  1
Stat  .  .

SLM 0  primary  device      TAPE            DISK
                status        .               .
                drive       idle            on line
                user                        SYSTEM
```

Note: Dots on the right of the SLM Stat header indicate that the associated SLMs are in service.

If the SLM Stat header	Do
has dots	step 19
is other than listed here	step 70

19 To manually busy the SLM, type

>BSY

and press the Enter key.

Example of a MAP response:

```
SLM 0 busy passed.
```

Example of a MAP display:

```
SLM   0  1
Stat  M  .
```

Replace system cards in a SuperNode SE CM/SLM (continued)

Note: The letter M on the right of the SLM Stat header indicates that the associated SLM is manual busy.

If the SLM	Do
busied	step 22
did not busy	step 70

20 To access the PMC level of the MAP display, type

>CM;PMC

and press the Enter key.

Example of a MAP display:

```
          PMC 0
            .

PORT0:      .
PORT1:      .
```

21 To manually busy the port that corresponds to the inactive CPU, type

>BSY 0 PORT port_number

and press the Enter key.

where

port_number
is the number of the inactive CPU (0 or 1)

Example input

>BSY 0 PORT 0

Example of a MAP response:

```
Maintenance action submitted.
Passed.
```

22 To offline the SLM, type

>OFFL

and press the Enter key.

Note: Wait for the light on the faceplate of the SLM to turn off before you continue this procedure.

Example of a MAP response:

Replace system cards in a SuperNode SE CM/SLM (continued)

```
SLM 0 now offline. Do not remove SLM card
until disk drive is spun down! This will be
indicated when the SLM card light turns off.
```

If the SLM	Do
offlined	step 23
did not offline	step 70

23 To access the MC level of the MAP display, type

>MC

and press the Enter key.

Example of a MAP display:

```
CM 0
  MC 0     MC 1
    .        .
```

Note: In the example, dots under the MC headers indicate that the associated MCs are in service.

24 Determine the state of the message controller (MC) on the inactive CPU.

Note: The term mbsy under the MC header indicates that the MC is manual busy.

If the state of the MC	Do
is `mbsy`	step 26
is not `mbsy`	step 25

25

WARNING
Possible loss of service
Make sure that you do not manually busy the MC that corresponds to the active CPU. Do not power down the inactive CPU plane with the MC that associates with the active busied CPU. This action will cause a warm restart.

To manually busy the MC that corresponds to the inactive CPU, type

>BSY mc_ number

and press the Enter key.

where

Replace system cards in a SuperNode SE CM/SLM (continued)

mc_number
is the number of the inactive CPU (0 or 1)

Example of a MAP response:

```
Maintenance action submitted.
MC busied OK.
```

If the MC	Do
busied	step 26
did not busy	step 70

At the CM/SLM shelf

26

WARNING
Static electricity damage
Wear a wrist strap that connects to the wrist-strap grounding point of a frame supervisory panel (FSP) to handle circuit cards. The wrist strap protects the cards against static electricity damage.

To power down the inactive CPU plane, press down and release the power switch on the faceplate of the NTDX15 power converter.

Note: For CPU 0, the NTDX15 power converter is in slots 4F to 6F. For CPU 1, the NTDX15 power converter is in slots 33F to 35F.

27 Perform the procedure *Replacing a card* in this document. Complete the procedure and return to this point.

28 To power up the inactive CPU, lift and release the power switch on the faceplate of the NTDX15 power converter.

Note: For CPU 0, the NTDX15 power converter is in slots 4F to 6F. For CPU 1, the power converter is in slots 33F to 35F.

Replace system cards in a SuperNode SE CM/SLM (continued)

At the CM reset terminal (RTIF) for the inactive CPU

29

WARNING
You must complete the firmware tests
If you do not complete the firmware tests, the CPUs cannot synchronize.

Wait for the switch to complete firmware tests.

Example of an RTIF response:

```
Testing Memory:
Shelf    Slot       PEC Module Status
 00       15       NT9X14EA ...
 00       16       NT9X14EA ...
Waiting for activity...
```

Note: When firmware testing is in progress, dots appear on the right of the PEC in the firmware testing status line of the RTIF response. As each firmware test is complete, another dot appears until firmware testing for the card is complete. If the dots do not continue to appear and another firmware testing status line does not appear, firmware tests stop. If the dots do not appear and the prompt Waiting for activity does not appear, firmware tests stop.

30 Determine if the firmware tests completed.

Note: If the firmware tests completed and CPU powered up, the Waiting for activity message appears.

If the inactive CPU	Do
powered up	step 31
did not turn on	step 70

At the MAP terminal

31 To access the PMC level of the MAP display, type

`>CM;PMC`

and press the Enter key.

32 To return the manual busy PMC port to service, type

`>RTS 0 PORT port_number`

and press the Enter key.

where

Replace system cards in a SuperNode SE CM/SLM (continued)

port_number
is the number of the inactive CPU (0 or 1)

Example of a MAP response:

```
Maintenance action submitted.
Passed.
```

If the RTS command	Do
passed	step 33
failed	step 70

33 To access the SLM that associates with the card that you replaced, type

>IOD;SLM slm_number

and press the Enter key.

where

slm_number
is the number of the SLM (0 or 1)

34 To return the SLM to service, type

>RTS

and press the Enter key.

Example of a MAP response:

```
SLM 0 return to service passed.
```

If the RTS command	Do
passed	step 35
failed	step 70

35 The next action depends on the type of card that you replaced.

If the card that you replaced	Do
is an NT9X14	step 36
is an NT9X26	step 38
is other than listed here	step 39

36 To access the Memory level of the MAP display, type

>CM;MEMORY

and press the Enter key.

Example of a MAP display:

Replace system cards in a SuperNode SE CM/SLM (continued)

```
CM 0  Plane 0  |  Plane 1
               |
        54321 P|P 12345
        .....     .....
```

37 To test the card that you replaced, type

>TST CARD card_number

and press the Enter key.

where

card_number
is the number of the memory card that you replaced(0 to 5)

Example of a MAP response:

```
Maintenance action submitted.
Memory test OK.
```

If the TST command	Do
passed	step 39
failed	step 70

At the CM reset terminal (RTIF) for the inactive CPU

38 To determine the result of the last self test, type

>\SELF TEST

and press the Enter key.

Example of a MAP response:

```
SELF TEST RESULTS: ROM OK  RAM OK  9X26 OK
```

If the self test	Do
passed	step 39
failed	step 70

39 Your next step depends on the reason that you perform this procedure.

If you	Do
perform this procedure as a result of a MC Tbl alarm	step 43
perform this procedure as a result of a PMCFlt alarm	step 43

Replace system cards in a SuperNode SE CM/SLM (continued)

If you	Do
perform this procedure as a result of a PMCTbl alarm	step 43
perform this procedure as a result of a NoTOD alarm	step 43
perform this procedure as a result of a SBsyMC alarm	step 43
perform this procedure as a result of a MBsyMC alarm	step 43
perform this procedure as a result of a CBsyMC alarm	step 43
perform this procedure for any reason other than listed here	step 40

At the MAP terminal

40 To access the MC level of the MAP display, type

`>CM;MC`

and press the Enter key.

41 To return the manual busy MC to service, type

`>RTS mc_ number`

and press the Enter key.

where

mc_number
is the number of the manual busy MC (0 or 1)

Example of a MAP response:

```
Maintenance action submitted.
MC RTS ok.
```

If the RTS command	Do
passed	step 42
failed	step 70

Replace system cards in a SuperNode SE CM/SLM (continued)

42 The next step depends on the type of switch and the software load.

If the switch	Do
is a SuperNode SE Series 20 or 60 with software release BASE06	step 43
is other than listed here	step 45

43 To record all the card changes in the history database for each card, type

>SWAPHW shelf_no slot_no side_no

and press the Enter key.

where

shelf_no
is the number of the shelf (0 or1)

slot_no
is the number of the slot (1 to 38)

side_no
is the side of the CM (front or back)

Example of a MAP response:

```
WARNING: You have indicated that the following circuit
pack has been replaced.  Please verify that this
accurately reflects which circuit pack has been changed,
and that the displayed PEC code matches what is currently
equipped in that slot:

Site  Flr  RPOs  Shf  Description  Slot  EQPEC
HOST  00   A00   DPCC 0  18  CM 0;0;0  19  9X13BC

Do you wish to continue?
Please confirm (YES", Y", NO" N") Y" or YES",

Card replacement has been recorded.
```

If the response	Do
is Card replacement has been recorded.	step 45
is Aborted. Card replacement has NOT been recorded.	step 44
is other than listed here	step 70

Replace system cards in a SuperNode SE CM/SLM (continued)

Note: The specified card joins the list of the cards that you replaced. The actual updates to the mismatch history database do not occur until the next manual SYNC attempt.

44 Enter the SWAPHW command as you did in step 43.

45 Determine the reason for the return of the circuit card.

If the fault	Do
is memory fault correctable mismatches	step 46
is mismatches other than memory fault correctable	step 46
is REx test failures: manual or auto	step 50
is manual test failures	step 50
is other failures	step 50

46 To retrieve the mismatch logs that associate with the mismatches, type

```
>LOGUTIL
```

and press the Enter key.

47 Collect or print all MM and MFC logs.

If software	Do
is BCS33 or earlier	step 50
is BCS34 or later	step 48

48 To retrieve the MMINFO logs that associate with the memory fault correctable mismatches, type

```
>MMINFO DECODE ALL
```

and press the Enter key.

49 Print out all MMINFO logs.

50 Obtain associated failure logs.

51 Write the PEC and serial number of the returned card on the first page of the log printout.

Note: If a minimum of two cards on a card list are returned, you only need one set of logs. If the failures are not the same, use separate logs as required for each card. On the return label of cards that do not have logs attached, indicate the card PEC code and serial number that the logs accompany.

Example: Logs returned with card NT9X13BC, serial number bnt123455mm

If the fault	Do
is a memory fault correctable mismatches	step 52

Replace system cards in a SuperNode SE CM/SLM (continued)

If the fault	Do
is mismatches other than memory fault correctable	step 54
is REX failures: manual or auto	step 56
is manual test failures	step 58
is other than listed here	step 60

52 Complete one return label (form 24-115) for each card that returns. Make sure that you include the following information:

- NT PEC
- serial number
- release number
- return authorization number from customer service
- BCS software release used at the time of replacement
- name of your company
- office identifier code
- your name
- site name

53 Enter the following in the failure description section of the label:

- reason for failure(failure caused by a memory fault correctable (MFC) ``nn'' faults in “dd'' days (example: 5 MFC in 4 days)
- the slot and CPU number(example: slot 23, CPU 1)
- that the logs are retrieved with the cards(example: logs are attached)
- for software release Base 06, include associated MFC logs
- if you removed other cards at the same time as the returned card(example: NT9X13BC, slot 20, CPU 1, #bnt12345mmm NT9x14DB, slot 14, CPU 0, #dgh744ggg)

Go to step 62.

54 Complete one return label (form 24-115) for each card returns. Make sure that you include the following information:

- NT PEC
- serial number
- release number
- return authorization number from customer service
- BCS software release used at the time of replacement
- name of your company
- office identifier code

Replace system cards in a SuperNode SE CM/SLM (continued)

- your name
- site name

55 Enter the following in the failure description section of the label:

- reason for failure(example: failure occurred during manual/auto Rex)
- the slot and CPU number(example: slot 23, CPU 1)
- that the logs are retrieved with the cards(example: logs are attached)
- if the card is on the recommended card list and in what order(example: first on card list or did not appear on card list
- if you remove other cards at the same time as the returned card(example: NT9X13BC, slot 20, CPU 1, #bnt12345mmm #2 on card list NT9x14DB, slot 14, CPU 0, #dgh744ggg, not on card list)

Go to step 62.

56 Complete one return label (form 24-115) to return for each card. Make sure that you include the following information:

- NT PEC
- serial number
- release number
- return authorization number from customer service
- BCS software release used at the time of replacement
- name of your company
- office identifier code
- your name
- site name

57 Enter the following in the failure description section of the label:

- failure due to memory fault correctable (MFC) ``nn" faults in “dd" days (example: 5 MFC in 4 days)
- the slot and CPU number(example: slot 23, CPU 1)
- that the logs are retrieved with the cards(example: logs are attached)
- if you removed other cards at the same time as the returned card(example: NT9X13BC, slot 20, CPU 1, #bnt12345mmm NT9x14DB, slot 14, CPU 0, #dgh744ggg)

Go to step 62.

58 Complete one return label (form 24-115) for each card that will return. Make sure that you include the following information:

- NT PEC
- serial number
- release number
- return authorization number from customer service

Replace system cards in a SuperNode SE CM/SLM (continued)

- BCS software release used at the time of replacement
- name of your company
- office identifier code
- your name
- site name

59 Enter the following in the failure description section of the label:

- reason for failure. Provide a short summary of occurrences and conditions.(example: Manual tests failed. Card reported in card list)
- the slot and CPU number(example: slot 23, CPU 1)
- that the logs are retrieved with the cards(example: logs are attached)

  Note: Include any available past logs. Past logs can indicate the possible fault.

- if the card is on the recommended card list and in what order(example: first on card list or did not appear on card list
- if you removed other cards at the same time as the returned card(example: NT9X13BC, slot 20, CPU 1, #bnt12345mmm, #2 on card list NT9x14DB, slot 14, CPU 0, #dgh744ggg, not on card list)

Go to step 62.

60 Complete one return label (form 24-115) for each card that you remove. Make sure that you include the following information:

- NT PEC
- serial number
- release number
- return authorization number from customer service
- BCS software release used at the time of replacement
- name of your company
- office identifier code
- your name
- site name

61 Enter the following in the failure description section of the label:

- reason for failure. Provide a short summary of occurrences and conditions.(example: Cannot sync. manual tests failed. Rotated cards. Able to sync with this card removed)
- the slot and CPU number(example: slot 23, CPU 1)
- that the logs are retrieved with the cards(example: attached logs)

  Note: Include any available past logs. Past logs can indicate the possible fault).

Replace system cards in a SuperNode SE CM/SLM (continued)

- if the card is on the recommended card list and in what order(example: first on card list or did not appear on card list
- if you removed other cards at the same time as the returned card(example: NT9X13BC, slot 20, CPU 1, #bnt12345mmm, #2 on card list NT9x14DB, slot 14, CPU 0, #dgh744ggg, not on card list)

62 When you complete this procedure, return the cards and associated documentation. To return the cards and associated documentation, refer to the procedure *Returning a card or assembly.*

63 Your next step depends on the reason that you perform this procedure.

If you	Do
perform this procedure as a result of the CM alarm clearing procedure	step 64
perform this procedure for any reason other than listed here	step 65

64 Return to the alarm clearing procedure that directed you this procedure and continue as directed.

65 To access the CM level of the MAP display, type

>CM

and press the Enter key.

66 To test the inactive CPU, type

>TST

and press the Enter key.

Example of a MAP response:

```
The test(s) listed below will destroy
the software load in inactive CPU:

    Static RAM test

Do you want to do the test(s) anyway?
Please confirm: (”YES”, ”Y”, ”NO”, or ”N”):
```

67 To confirm the command, type

>YES

and press the Enter key.

If the TST command	Do
passed	step 68
is other than listed here	step 70

Replace system cards in a SuperNode SE CM/SLM (end)

At the CM reset terminal (RTIF) for the inactive CPU

68 To release the jam on the inactive CPU, type

>\RELEASE JAM

and press the Enter key.

RTIF response:

```
JAM RELEASE DONE
```

At the MAP terminal

69 To synchronize the CM, type

>SYNC

and press the Enter key.

Example of a MAP response:

```
Maintenance action submitted.
Synchronization successful.
```

If the response	Do
indicates the SYNC command was successful	step 71
is other than listed here	step 70

70 For additional help, contact the next level of support.

71 The procedure is complete.

4 Digital carrier module card replacement procedures

Introduction

This chapter provides card replacement procedures for the digital carrier module (DCM) and the digital echo suppressor (DES). The first section in the chapter provides diagrams of DCM and DES shelf designs.

Each procedure contains the following sections:

- Application
- Common procedures
- Action

Card replacement procedures for the frame supervisory panel (FSP) and modular supervisory panel (MSP) are in the chapter “Frame supervisory panel and maintenance supervisory panel card replacement procedures".

Application

This section identifies the DCM or DES card(s) discussed in the replacement procedure.

Common procedures

This section lists common procedures in the DCM or DES card replacement procedure. A common procedure is a series of steps that you repeat within maintenance procedures. The procedure for the removal and replacement of a card. Common procedures are in the common procedures chapter in this NTP.

Do not go to the common procedures unless the step-action procedure directs you.

Action

This procedure provides a summary flowchart and a list of steps. Use the flowchart to review the procedure. Follow the steps to perform the procedure.

Recording card replacement activities

When you replace a card, record the following information in office records:

- the serial number of the card that you replaced
- the date that you replaced the card
- the reason that you replaced the card

DCM shelf layouts

Application

This module provides a frame design diagram for the digital carrier equipment (DCE) frame. The module also provides shelf diagrams for the following:

- digital carrier module (DCM), with two power converters
- DCM, with one power converter
- digital echo suppressor (DES)

Note: The frame and shelf designs on the following pages are common. The shelves in your office can have differences.

DCM shelf layouts (continued)

DCE frame

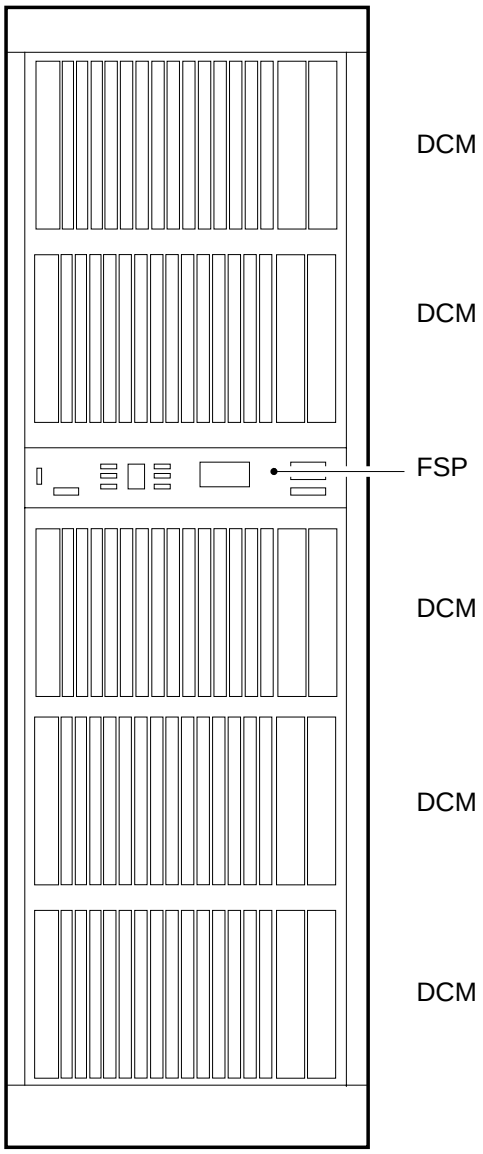

Legend:

DCM	Digital carrier module
FSP	Frame supervisory panel

DCM shelf layouts (continued)

DCM, with two power converters

Cards

NT2X06	Power converter card	21F
NT2X07	Power converter card	18F
NT0X50	Filler faceplate	17F
NT0X50	Filler faceplate	16F
NT0X50	Filler faceplate	15F
NT2X32	DCM processor card	14F
NT2X33	Control card	13F
NT2X24	PP message processor card	12F
NT0X50	Filler faceplate	11F
NT2X36	Network interface card	10F
NT2X37	DCM tone card	09F
NT2X38	DCM signaling card	08F
NT2X35	DCM interface card	07F
NT2X35	DCM interface card	06F
NT2X35	DCM interface card	05F
NT2X35	DCM interface card	04F
NT2X35	DCM interface card	03F
NT0X50	Filler faceplate	01F

Rear *Front*

DCM shelf layouts (continued)

DCM, with one power converter

Cards

NT2X70	Power converter card	20F
NT0X50	Filler faceplate	18F
NT0X50	Filler faceplate	17F
NT0X50	Filler faceplate	16F
NT0X50	Filler faceplate	15F
NT2X32	DCM processor card	14F
NT2X33	Control card	13F
NT2X24	PP message processor card	12F
NT0X50	Filler faceplate	11F
NT2X36	Network interface card	10F
NT2X37	DCM tone card	09F
NT2X38	DCM signaling card	08F
NT2X35	DCM interface card	07F
NT2X35	DCM interface card	06F
NT2X35	DCM interface card	05F
NT2X35	DCM interface card	04F
NT2X35	DCM interface card	03F
		02F
NT0X50	Filler faceplate	01F

Rear *Front*

DCM shelf layouts (end)

Digital echo suppressor (DES)

Cards

NT2X70	Power converter card	20F
NT0X50	Filler faceplate	18F
NT0X50	Filler faceplate	17F
NT0X50	Filler faceplate	16F
NT0X50	Filler faceplate	15F
NT2X32	DCM processor card	14F
NT2X33	Control card	13F
NT2X24	PP message processor card	12F
NT0X50	Filler faceplate	11F
NT2X36	Network interface card	10F
NT2X37	DCM tone card	09F
NT2X38	DCM signaling card	08F
NT2X35	DCM interface card	07F
NT2X35	DCM interface card	06F
NT2X35	DCM interface card	05F
NT2X35	DCM interface card	04F
NT2X35	DCM interface card	03F
		02F
NT0X50	Filler faceplate	01F

Rear *Front*

Control complex cards in a digital carrier module

Application

Use this procedure to replace the following cards in the shelves or frames listed.

PEC	Suffix	Card name	Shelf or frame name
NT2X32	AA	Master processor card	Digital carrier module (DCM), Digital echo supressor (DES)
NT2X33		Control card	DCM, DES
NT2X34		Message supervision card	DCM, DES
NT2X37		Tone card	DCM, DES
NT2X38		Signaling timing card	DCM, DES

Refer to the “Index", if you cannot identify the following features for the card you want to replace:

- product engineering code (PEC)
- PEC suffix
- provisioned shelf
- provisioned frame

The “Index" contains a list of the cards, shelves, and frames documented in this card replacement book.

Common procedures

This procedure refers to the following common procedures:

- *Replacing a card*
- *Loading a PM*

Do not go to the common procedure unless the step-action procedure directs you.

Action

This procedure contains a summary flowchart and a list of steps. Use the flowchart to review the procedure. Follow the steps to perform the procedure.

Control complex cards in a digital carrier module (continued)

Summary of replacing Control complex cards in a digital carrier module

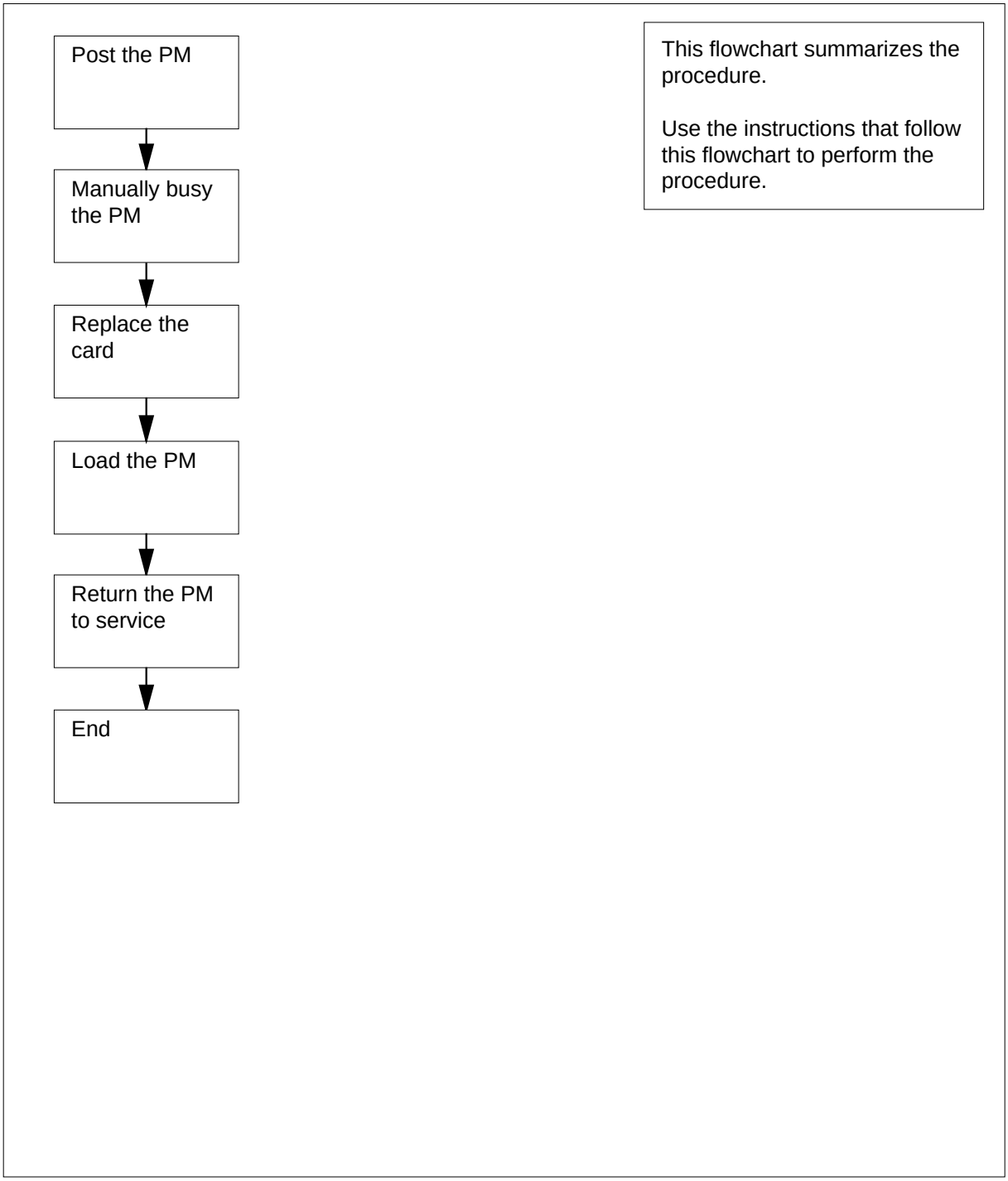

Control complex cards in a digital carrier module (continued)

Replacing Control complex cards in a digital carrier module

At the MAP terminal

1

> **CAUTION**
> **Loss of service**
> This procedure includes directions to manually busy a DCM or DES. If you manually busy a DCM or DES, service degradation can occur. Perform this procedure only if you need to restore out-of-service components. In other events, perform this procedure during periods of low traffic.

Obtain a replacement card. Make sure that the replacement card has the same PEC and PEC suffix, as the card that you remove.

2 To access the PM level of the MAP display, type

>MAPCI;MTC;PM

and press the Enter key.

Example of a MAP display:

```
            SysB    ManB    OffL    CBsy    ISTb    InSv
 PM           6       1       0       0      23      24
```

3 To post the PM associated with the card that you replace, type

>POST pm_type pm_no

and press the Enter key.

where

pm_type
is the type of PM (DCM, DES)

pm_no
is the PM number (0 to 511)

Example of a MAP display:

```
            SysB    ManB    OffL    CBsy    ISTb    InSv
 PM            6       1       0       0      23      24
 DCM           1       0       0       0       1       4
DCM     0    InSv
```

Control complex cards in a digital carrier module (continued)

4 Determine the state of the PM unit that associates with the card you want to replace.

If the state of the PM unit	Do
is `ISTb`, `InSv`, `SysB`, or `CBsy`	step 5
is ManB	step 7
is OffL	step 13

5 A maintenance flag (Mtce) can appear. The flag indicates that system-initiated maintenance tasks are in progress. Wait until the flag disappears from the status line before you proceed to the next step.

6 To manually busy the PM, type

>BSY

and press the Enter key.

Example of a MAP response:

```
OK.
DCM 0 Bsy
```

If the BSY command	Do
passed	step 7
failed	step 15

At the shelf

7

WARNING
Static electricity damage
Wear a wrist strap that connects to the wrist-strap grounding point of a frame supervisory panel (FSP) or a modular supervisory panel (MSP) to handle circuit cards. The wrist strap protects the cards against static electricity damage.

To replace the card, use the procedure *Replacing a card* in this document. Complete the procedure and return to this point.

Note: If the card you replace has switches, make sure that the switches on the replacement card have the same settings.

Control complex cards in a digital carrier module (end)

8 The next action depends on your reason that you perform this procedure.

If a maintenance procedure	Do
directed you to this procedure	step 9
did not direct you to this procedure	step 10

9 Return to the maintenance procedure that directed you to this procedure and continue as directed.

At the MAP terminal

10 To load the PM, type

>LOADPM

and press the Enter key.

If the LOADPM command	Do
failed	step 11
passed	step 12

11 Perform the procedure *Loading a PM* in this document. Complete the procedure and return to this point.

12 To return the PM to service, type

>RTS

and press the Enter key.

If the RTS command	Do
passed	step 16
passed, but the PM is `ISTb` as a result of a command protocol violation	step 14
failed	step 15

13 To determine why the component is offline, consult operating company personnel. Continue as directed by operating company personnel.

14 A minor problem is present, but the PM can process traffic. For additional help, contact the next level of support.

15 For additional help, contact the next level of support.

16 The procedure is complete.

NT2X35
in a digital carrier module

Application

Use this procedure to replace an NT2X35 card in a digital carrier module (DCM), as listed in the following table.

PEC	Suffix	Card name	Shelf or frame name
NT2X35	AA	DCM interface card	DCM

Refer to the “Index", if you cannot identify the following features for the card that you want to replace:

- product engineering code (PEC)
- PEC suffix
- provisioned shelf
- provisioned frame

The “Index" contains a list of the cards, shelves, and frames documented in this card replacement book.

Common procedures

This procedure refers to the following common procedures:

- *Replace a card*
- *Loading a PM*

Do not go to the common procedure unless the step-action procedure directs you.

Action

This procedure contains a summary flowchart and a list of steps. Use the flowchart to review the procedure. Follow the steps to perform the procedure.

NT2X35
in a digital carrier module (continued)

Summary of replacing an NT2X35 in a digital carrier module

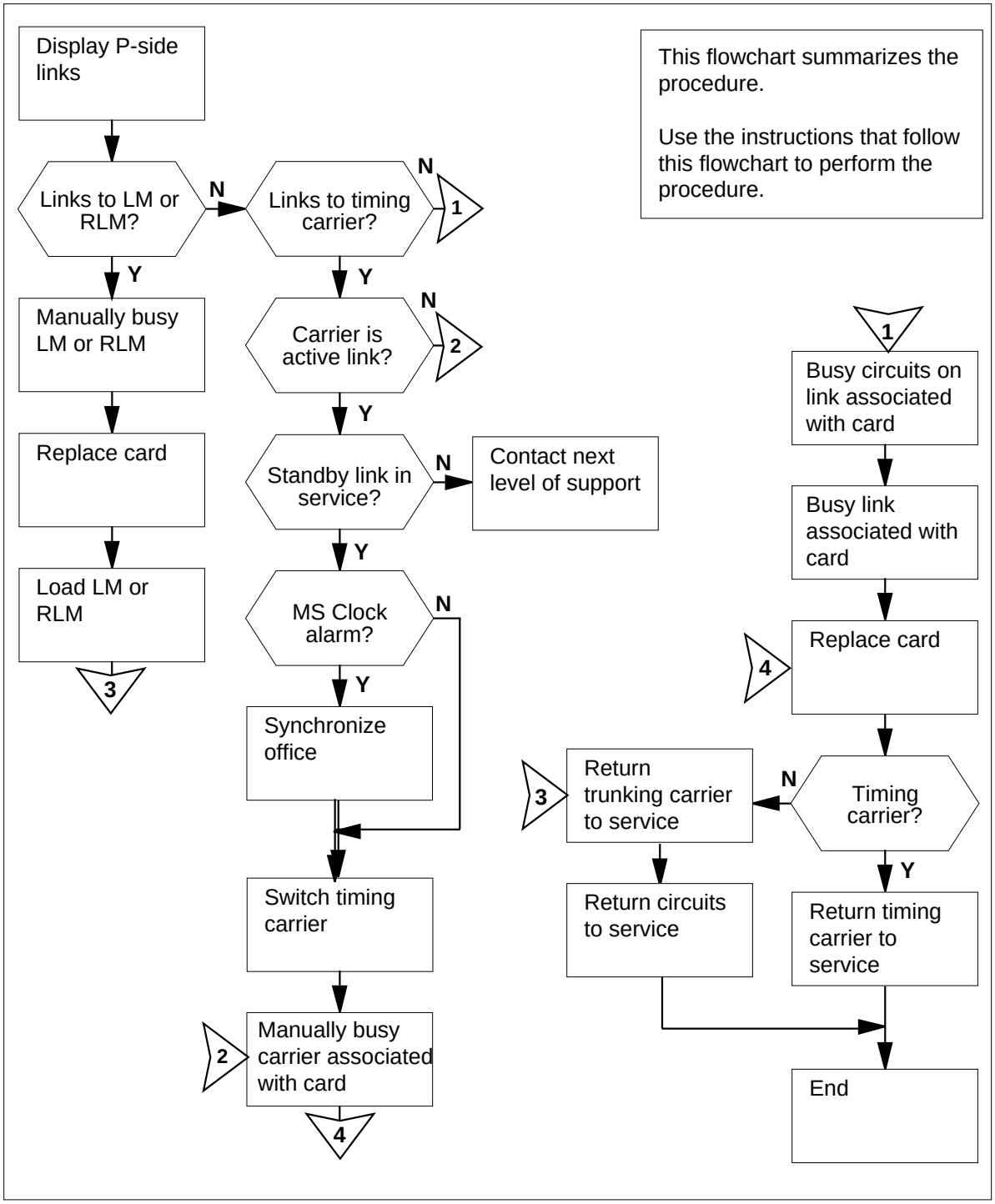

NT2X35
in a digital carrier module (continued)

Replacing an NT2X35 in a digital carrier module

At the MAP terminal

1

> **WARNING**
> **Loss of service**
> This procedure includes directions to manually busy a DCM DS1 trunk, a timing carrier, or a P-side node. Service degradation or service power failure can occur if you manually busy any of these components. Perform this procedure only if you need to restore out-of-service components. In other events, perform this procedure during periods of low traffic.

> **WARNING**
> **Loss of service**
> If you insert a defective NT2X35 card, the system can take the DCM out of service. Test the replacement card before you insert the card or use a tested spare.

Obtain a replacement card. Make sure that the replacement card has the same PEC and PEC suffix as the card that you remove.

2 To access the PM level of the MAP display, type

`>MAPCI;MTC;PM`

and press the Enter key.

Example of a MAP display:

```
                 SysB    ManB    OffL    CBsy    ISTb    InSv
PM                  6       1       0       0      23      24
```

3 To post the DCM for the card that you replace, type

`>POST  DCM  pm_no`

and press the Enter key.

where

pm_no
is the PM number (0 to 511)

Example of a MAP display:

NT2X35
in a digital carrier module (continued)

```
                    SysB    ManB    OffL    CBsy    ISTb    InSv
 PM                    6       1       0       0      23      24
 DCM                   1       0       0       0       1       4

DCM     0    ISTb
```

4 To display a list of P-side links, type

>TRNSL P

and press the Enter key.

Example #1 of a MAP response:

```
No P-side node.
LINK  0: Carrier of Class - Timing
LINK  1: Carrier of Class - Trunk
LINK  2: Carrier of Class - Trunk
LINK  3: Carrier of Class - Trunk
LINK  4: Carrier of Class - Trunk
```

Example #2 of a MAP response:

```
LINK  0: LM  REM1 00 0  0;CAP:MS;STATUS:MBsy   ;MsgCond:CLS
LINK  1: LM  REM1 00 0  1;CAP:MS;STATUS:OK     ;MsgCond:OPN
LINK  2: LM  REM1 00 0  2;CAP: S;STATUS:OK
LINK  3: Carrier of Class - Trunk
LINK  4: Carrier of Class - Trunk
```

5 Record the following information for links to P-side nodes:

- link number for carrier links
- carrier class for carrier links
- link number
- node type
- node site name
- frame number
- unit number

Note 1: Links correspond to NT2X35 cards as follows: link 0 = slot 3, link 1 = slot 4, link 2 = slot 5, link 3 = slot 6, and link 4 = slot 7. Links are carriers of a class or links to P-side nodes (line modules or remote line modules).

Note 2: Link number and carrier class identify the carrier links. In example #1 in step 4, link 0 is a carrier of class - timing. Note that example #1 shows that the DCM does not connect to a P-side node. P-side node links are identified by link number, node type, node site name, frame

NT2X35
in a digital carrier module (continued)

number, and unit number. In example #2 in step 4, link 0 is a message link to a line module (LM), site name REM1, frame 00, and unit 0.

If the link	Do
is an LM or remote line module (RLM)	step 6
is a carrier of class - timing	step 8
is a carrier of class - trunk	step 21

6 To post the LM that associates with the link, type

>POST pm_type site frame_no unit_no

and press the Enter key.

where

pm_type
is the type of PM (LM, RLM)

site
is the LM site name (alphanumeric)

frame_no
is the number of the frame (0 to 511)

unit_no
is the number of the unit (0 to 9)

Example of a MAP display:

```
                    SysB    ManB    OffL    CBsy    ISTb    InSv
 PM                    0       0       2       0       4      71
 LM                    0       0       0       0       2       2

LM  REM1 00 0  ISTb                TSTFAIL LINKS
RGen : 0 InSv        1 InSv
POST:
```

If the PM	Do
is `InSv`, `ISTb`, `SysB`, or `CBsy`	step 7
is `ManB` or `Offl`	step 28

7 To manually busy the PM, type

>BSY

and press the Enter key.

Example of a MAP display:

NT2X35
in a digital carrier module (continued)

```
                    SysB    ManB    OffL    CBsy    ISTb    InSv
 PM                    0       1       2       0       3      71
 LM                    0       1       0       0       1       2

LM  REM1 00 0  ManB
RGen : 0 Standby     1 InSv
bsy
OK.
```

Go to step 28.

8 To access the CARRIER level of the MAP display, type

>TRKS;CARRIER

and press the Enter key.

Example of a MAP display:

```
CLASS   ML  OS  ALARM SYSB MANB  UNEQ OFFL  CBSY PBSY INSV
TRUNKS   4   0      4    0    0     0    3     0    0  186
REMOTE   0   0      1    0    1     0    0     0    2    6
TIMING   0   0      0    0    0     0    0     0    0    2

CARRIER:
```

9 To post the timing carriers, type

>POST TIMING

and press the Enter key.

Example of a MAP display:

```
CLASS   ML  OS  ALARM SYSB MANB  UNEQ OFFL  CBSY PBSY INSV
TRUNKS   4   0      4    0    0     0    3     0    0  186
REMOTE   0   0      1    0    1     0    0     0    2    6
TIMING   0   0      0    0    0     0    0     0    0    2

NO CLASS  SITE    PM    CKT D  ALARM SLIP  STATE   TLINK MODE
0  TIMING HOST  DCM    0  0 C           0  INSV     0  ACTIVE
1  TIMING HOST  DCM    1  0 C           0  INSV     1 STANDBY
POSTED BY CONDITION : TIMING

CARRIER:
POST:
```

10 Determine if the carrier that associates with the card you are working on is the active or the standby link. Determine the service state of both links.

Note: The PM type in column 4 identifies the link. The PM number in column 5 and the circuit number in column 6 identify the link. In the

NT2X35
in a digital carrier module (continued)

example in step 9, link 0 for DCM 0 is the active time link. The service state appears under the STATE header on the MAP display.

If the carrier	Do
supports the active link, and the standby link is in service (`INSV` or `ISTB`)	step 11
supports the active link, and the standby link is not in service	step 41
supports the standby link (one or both links are standby)	step 19

11 To access the CLOCK level of the MAP display, type

`>MS;CLOCK`

and press the Enter key.

Example of a MAP display:

```
     Message Switch   Clock   Shelf  0       Inter-MS Link 0 1
MS 0       .          Master         .                     . .
MS 1       .          Slave          .                     . .

Shelf 0                 1 1 1 1 1 1 1 1 1 1 2 2 2 2 2 2 2
Card  1 2 3 4 5 6 7 8 9 0 1 2 3 4 5 6 7 8 9 0 1 2 3 4 5 6
Chain
MS 0  . . . . . - - - - - - - - - . . . . . .
MS 1  . . . . . - - - - - - - - - . . . . . .

Card 02 Alm Stat %Adj Src | Car Stat Sp PM     CCT
MS 0  .  .  Syn +11.3 Lk0 | Lk0 Lck   0 DTC 000 00
MS 1  .  .  Syn -11.9 Ms0 | Lk1 Smp   0 DTC 001 00
Links Slipping:     6 out of   200
MS:
CLOCK:
```

12 Determine if a CLOCK alarm under the MS alarm banner is present.

If a CLOCK alarm	Do
is present	step 13
is not present	step 14

13 To synchronize the office, type

`>SYNC`

and press the Enter key.

Example of a MAP response:

NT2X35
in a digital carrier module (continued)

```
Request to TEST INSV MS: 0 shelf: 0 card: 2  submitted.
Request to TEST INSV MS: 0 shelf: 0 card: 2  passed.
Request to TEST INSV MS: 1 shelf: 0 card: 2  submitted.
Request to TEST INSV MS: 1 shelf: 0 card: 2  passed.
Request to Synchronize Clock 0: Submitted
Request to Synchronize Clock 0: Passed
Clock synchronization started ...
```

14 To switch the timing carrier, type

>SWCARR

and press the Enter key.

Example of a MAP response:

```
Inactive link is not in SYNC and may cause carrier slips
Do you wish to continue ?
Please confirm ("YES", "Y", "NO", or "N"):
```

15 To make sure that you can safely switch active timing carriers, consult with operating company personnel or with the next level of support. When you have permission, continue this procedure.

16 To confirm the command, type

>YES

and press the Enter key.

Example of a MAP response:

```
Request to Switch Timing Links: Submitted
Request to Switch Timing Links: Passed
```

17 To access the CARRIER level of the MAP display, type

>TRKS;CARRIER

and press the Enter key.

18 To post the timing carriers, type

>POST TIMING

and press the Enter key.

19 To manually busy the carrier that associates with the card you replace, type

>BSY list_no

and press the Enter key.

where

list_no
is the list number (0 to 4) for the link

Example of a MAP response:

NT2X35
in a digital carrier module (continued)

```
DCM  1 CCT 0 is a TIMING link.
Do you want to busy this carrier ?
Please confirm ("YES", "Y", "NO", or "N"):
```

20 To confirm the command, type

>YES

and press the Enter key.

Note: For all maintenance commands at the CARRIER level, the list number in the far-left column under the N header refers to links.

If the BSY command	Do
passed	step 28
failed	step 43

21 To access the TTP level of the MAP display, type

>TRKS;TTP

and press the Enter key.

22 To post the link that associates with the card you replace, type

>POST D DCM pm_no link_no

and press the Enter key.

where

pm_no
is the PM number (0 to 999)

link_no
is the number of the link (0 to 19) that associates with the card you replace

If	Do
a set of circuits is posted	step 23
the response is `NO CKT, SET IS EMPTY`	step 24

23 To manually busy all circuits on the link, type

>BSY ALL

and press the Enter key.

Note: Make sure that all circuits are manual busy before you proceed.

24 To access the CARRIER level of the MAP display, type

>CARRIER

and press the Enter key.

NT2X35
in a digital carrier module (continued)

Example of a MAP display:

```
CLASS   ML  OS  ALARM SYSB MANB  UNEQ OFFL  CBSY PBSY INSV
TRUNKS   4   2      9    2   28     0    0    15    0   41
REMOTE   0   0      0    0   12     0    0     2    0    3
TIMING   0   1      1    0    1     0    0     0    0    1

CARRIER:
```

25 To post the carriers for the PM, type

>POST DCM pm_no

and press the Enter key.

where

pm_no
is the PM number (0 to 511)

Example of a MAP display:

```
CLASS   ML  OS  ALARM SYSB MANB  UNEQ OFFL  CBSY PBSY INSV
TRUNKS   4   0      4    0    0     0    3     0    0  186
REMOTE   0   0      0    0    0     0    0     0    0    9
TIMING   0   0      0    0    0     0    0     0    0    2
  DS1
N CLASS  SITE DCM  CK D ALRM SLIP FRME  BER     ES  SES STATE
0 REMOTE HOST    0  0 C         0    0   0      0    0  INSV
1 REMOTE HOST    0  1 C         0    0   0      0    0  INSV
2 REMOTE HOST    0  2 C         0    0   0      0    0  INSV
3 TRUNKS HOST    0  3 C         0    0   0      0    0  INSV
4 TRUNKS HOST    0  4 C         0    0   0      0    0  INSV
SIZE OF POSTED SET  :   5
CARRIER:
POST:
```

26 Determine the state of the carrier that associates with the card you replace.

If the link	Do
is INSV, ISTB, or SYSB	step 27
is MANB	step 28
is OFFL	step 40

27 To manually busy the link, type

>BSY list_no

and press the Enter key.

where

list_no
is the list number (0 to 4) for the link

NT2X35
in a digital carrier module (continued)

Note: For all maintenance commands at the CARRIER level, the list number in the far-left column under the N header refers to links.

If the BSY command	Do
passed	step 28
failed	step 43

At the shelf

28

WARNING
Static electricity damage
Wear a wrist strap that connects to the wrist-strap grounding point of a frame supervisory panel (FSP) or a modular supervisory panel (MSP) to handle circuit cards. The wrist strap protects the cards against static electricity damage.

To replace the card, perform the procedure *Replacing a card* in this document. Complete the procedure and return to this point.

Note: If the card that you replace has switches, make sure that the switches on the replacement card have the same settings.

29 The next action depends on the reason that you perform this procedure.

If a maintenance procedure	Do
directed you to this procedure	step 30
did not direct you to this procedure	step 31

30 Return to the maintenance procedure that directed you to this procedure and continue as directed.

At the MAP terminal

31 The next action depends on the type of link supported by the card that you replaced.

If the link	Do
is to a line module (LM or RLM)	step 32
is a carrier of class - timing	step 35
is a carrier of class - trunk	step 36

NT2X35
in a digital carrier module (continued)

32 To load the PM, type

>LOADPM

and press the Enter key.

Example of a MAP response:

```
LM REM1 00 0  LoadPM  PASSED
Load ESA passed
```

If the LOADPM command	Do
passed	step 44
failed	step 33

33 To load the PM unit, use the procedure *Loading a PM* in this document. Complete the procedure and return to this point.

34 To return the PM to service, type

>RTS

and press the Enter key.

Example of a MAP response:

```
rts
OK.
InSvce Tests Initiated
OK.
```

If RTS command	Do
passed	step 44
failed	step 43

35 To return the timing carrier to service, type

>RTS list_no

and press the Enter key.

where

list_no
is the list number (0 to 4) for the carrier

Example of a MAP response:

```
OK.
```

If the RTS command	Do
passed	step 44

NT2X35
in a digital carrier module (continued)

If the RTS command	Do
failed	step 43

36 To return the trunking carrier to service, type

>RTS list_no

and press the Enter key.

where

list_no
is the list number (0 to 4) for the carrier

Example of a MAP response:

```
OK.
```

If the RTS command	Do
passed	step 37
failed	step 43

37 To access the TTP level of the MAP display, type

>TTP

and press the Enter key.

38 To post the link that associates with the card you replace, type

>POST D DCM pm_no link_no

and press the Enter key.

where

pm_no
is the PM number (0 to 999)

link_no
is the number of the link (0 to 19) that associates with the cardyou replace

If	Do
a set of circuits is posted	step 39
the response is `NO CKT, SET IS EMPTY`	step 44

39 To return all circuits to service, type

>RTS ALL

and press the Enter key.

NT2X35
in a digital carrier module (end)

40 To determine why the component is offline, consult operating company personnel. Continue this procedure as directed by office personnel.

41 To determine if you can remove the active timing link from service, consult the next level of support. Continue this procedure as directed by your next level of support.

42 A minor problem is present, but the DCM can process traffic. For additional help, contact the next level of support.

43 For additional help, contact the next level of support.

44 The procedure is complete.

NT2X36
in a digital carrier module

Application

Use this procedure to replace the NT2X36 card in a digital carrier module (DCM), as listed in the following table.

PEC	Suffix	Card name	Shelf or frame name
NT2X36	AA	Network interface card	DCM

Refer to the “Index", if you cannot identify the following features for the card that you want to replace:

- product engineering code (PEC)
- PEC suffix
- provisioned shelf
- provisioned frame

The “Index" contains a list of the cards, shelves, and frames this card replacement book documents.

Common procedures

This common procedure refers to the following common procedures:

- *Replacing a card*
- *Loading a PM*

Do not go to the common procedure unless the step-action procedure directs you.

Action

This procedure contains a summary flowchart and a list of steps. Use the flowchart to review the procedure. Follow the steps to perform the procedure.

NT2X36
in a digital carrier module (continued)

Summary of replacing an NT2X36 in a digital carrier module

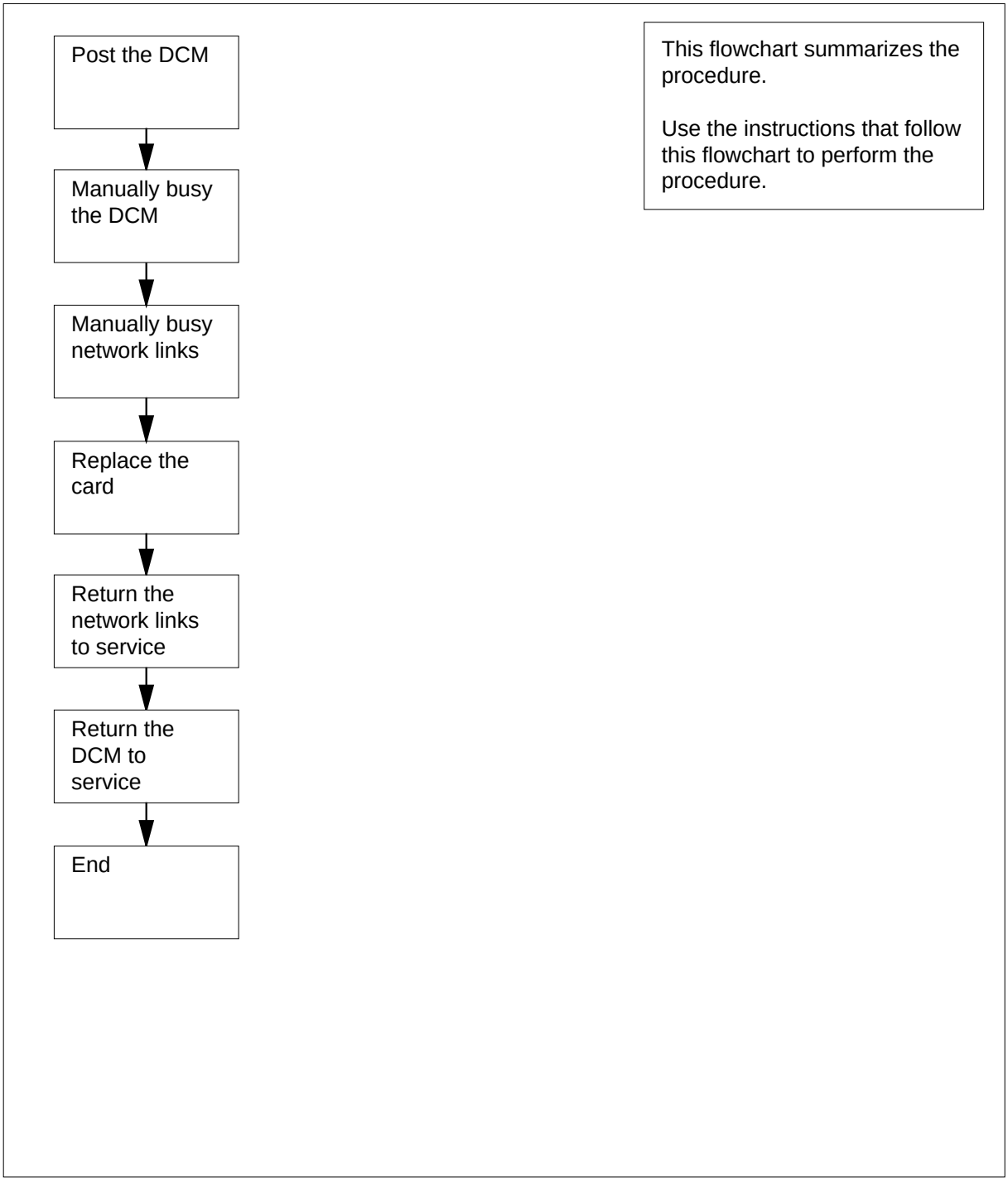

NT2X36
in a digital carrier module (continued)

Replacing an NT2X36 in a digital carrier module

At the MAP terminal

1

> **WARNING**
> **Loss of service**
> This procedure includes directions to manually busy a DCM. Service degradation can occur if you manually busy a DCM. Perform this procedure only if you need to restore out-of-service components. In other events, perform this procedure during periods of low traffic.

Obtain a replacement card. Make sure that the replacement card has the same PEC and PEC suffix as the card that you remove.

2 To access the PM level of the MAP display, type

>MAPCI;MTC;PM

and press the Enter key.

Example of a MAP display:

```
          SysB    ManB    OffL    CBsy    ISTb    InSv
PM           6       1       0       0      23      24
```

3 To post the PM that associates with the card you replace, type

>POST DCM pm_no

and press the Enter key.

where

pm_no
is the PM number (0 to 511)

Example of a MAP display:

```
             SysB    ManB    OffL    CBsy    ISTb    InSv
PM              6       1       0       0      23      24
DCM             1       0       0       0       1       4

DCM     0    InSv
```

NT2X36
in a digital carrier module (continued)

4 Determine the state of the PM unit that associates with the card you want to replace.

If the state of the PM unit	Do
is `ISTb`, `InSv`, `SysB`, or `CBsy`	step 5
is ManB	step 7
is OffL	step 31

5 A maintenance flag (Mtce) can appear. A Mtce flag indicates that system-initiated maintenance tasks are in progress. Wait until the flag disappears from the status line before you proceed to the next step.

6 To manually busy the DCM, type

>BSY

and press the Enter key.

Example of a MAP response:

```
OK.DCM 0 Bsy
```

If the BSY command	Do
passed	step 7
failed	step 33

7 To display a list of C-side links, type

>TRNSL C

and press the Enter key.

Example #1 of a MAP response:

```
LINK  0: NET 0  1  1;CAP:MS;STATUS:OK    ,P;MsgCond:OPN
LINK  0: NET 1  1  1;CAP:MS;STATUS:OK    ,P;MsgCond:OPN
LINK  1:NET 0  1  5;CAP: S;STATUS:OK    ,P
LINK  1: NET 1  1  5;CAP: S;STATUS:OK    ,P
LINK  2: NET 0  1  9;CAP: S;STATUS:OK    ,P
LINK  2: NET 1  1  9;CAP: S;STATUS:OK    ,P
LINK  3: NET0  1 13;CAP: S;STATUS:OK    ,P
LINK  3: NET 1  1 13;CAP: S;STATUS:OK    ,P
```

Example #2 of a MAP response:

NT2X36
in a digital carrier module (continued)

```
LINK  0: ENET 0  0 18 04   ;CAP:MS;STATUS:OK  ,C  ;MsgCond:OPN
LINK  0: ENET 1  0 28 04   ;CAP:MS;STATUS:OK  ,C  ;MsgCond:OPN
LINK  1: ENET 0  0 18 05   ;CAP: S;STATUS:OK  ,C
LINK  1: ENET 1  0 28 05   ;CAP: S;STATUS:OK  ,C
LINK  2: ENET 0  0 18 06   ;CAP: S;STATUS:OK  ,C
LINK  2:ENET 1  0 28 06   ;CAP: S;STATUS:OK  ,C
LINK  3: ENET 0  018 07   ;CAP: S;STATUS:OK  ,C
LINK  3: ENET 1  0 28 07  ;CAP: S;STATUS:OK  ,C
```

If the network	Do
is a junctored network (JNET)	step 8
is a enhanced network (ENET)	step 13

8 Record the JNET plane, pair, and link for each C-side link.

Note 1: The NT2X36 network interface card supports eight C-side links for each card - four links to each network plane.

Note 2: The network plane, pair, and link are in columns 4, 5, and 6 of the response to a TRNSL command at the PM level. Example #1 in step 7 demonstrates this response. For example, C-side link 3 at the bottom of the display is on network plane 1, pair 1, link 13.

9 To access the NET level of the MAP display, type

>NET

and press the Enter key.

Example of a MAP display:

```
Net                    11111  11111  22222  22222  33
Plane  01234  56789  01234  56789  01234  56789  01
0    L..
1    ...
```

10 To access the LINKS level of the MAP display, type

>LINKS pair_no

and press the Enter key.

where

pair_no
is the number of the pair (0 to 31) that connects to the C-side links

Example of a MAP display:

NT2X36
in a digital carrier module (continued)

```
Net                     11111  11111  22222  22222  33
 Plane  01234  56789  01234  56789  01234  56789  01
   0    L..
   1    ...
Net   1  Links                11  1111  1111  2222  2222  2233
       Plane   0123  4567  8901  2345  6789  0123  4567  8901
         0     ....  ....  ..P.  ....  .P..  .P..  .P..  .P..
         1     ....  ....  ..P.  ....  .P..  .P..  .P..  .P..
        Links  3333  3333  4444  4444  4455  5555  5555  6666
       Plane   2345  6789  0123  4567  8901  2345  6789  0123
         0     .P..  .P..  .P..  .P..  ..P.  ..-.  ..-.  ..-.
         1     .P..  .P..  .P..  .P..  ..P.  ..-.  ..-.  ..-.
```

11 To manually busy one of the links you recorded in step 8, type

>BSY plane_no link_no

and press the Enter key.

where

plane_no
is the number of the plane for the link (0 or 1)

link_no
is the link number (0 to 63)

Example of a MAP response:

```
 BSY 0 30OK
```

12 Repeat step 11 for all C-side links.

Go to step 19.

13 Record the ENET plane, shelf, card, and link for each C-side link.

Note 1: The NT2X36 network interface card supports eight C-side links for each card - four links to each network plane.

Note 2: The network plane, shelf, card, and link are in columns 4, 5, 6, and 7 of the response to a TRNSL command at the PM level. In example #2 in step 7 demonstrates this response. For example, C-side link 3 at the bottom of the display is on network plane 1, shelf 0, card 28, link 07.

14 To access the NET level of the MAP display, type

>NET

and press the Enter key.

Example of a MAP display:

```
ENET     System   Matrix  Shelf 0 1 2 3
 Plane 0 CSLink   .             F - - -
 Plane 1 CSLink     .            F - - -ENET:
```

NT2X36
in a digital carrier module (continued)

15 To access the SHELF level of the MAP display, type

>SHELF shelf_no

and press the Enter key.

where

shelf_no
is the number of the shelf (0 to 7) that connects to the C-side links

Example of a MAP display:

```
ENET     System   Matrix  Shelf 0 1 2 3
 Plane 0 CSLink     .           F - - -
 Plane 1 CSLink     .           F - - -

SHELF 00  Slot         1111111 11122222 22222333 333333
            123456 78 90123456 78901234 56789012 345678
Plane 0    .  .   IF ....---- -------- ----.... .  .
Plane 1    .  .   IF ....---- -------- ----.... .  .
```

16 To access the CARD level of the MAP display, type

>CARD card_no

and press the Enter key.

where

card_no
is the number of the card (1 to 38) that connects to the C-side links

Example of a MAP display:

```
ENET     System   Matrix  Shelf 0 1 2 3
 Plane 0 CSLink     .           F - - -
 Plane 1 CSLink     .           F - - -

SHELF 00  Slot         1111111 11122222 22222333 333333
            123456 78 90123456 78901234 56789012 345678
Plane 0    .  .   IF ....---- -------- ----.... .  .
Plane 1    .  .   IF ....---- -------- ----.... .  .

 CARD 32   Front:     Back:   DS-512 Links
           Xpt        I/F    0 1 2 3
 Plane 0    .          .     . . . -
 Plane 1    .          .     . . . -
```

17 To manually busy the link that you recorded in step 13, type

>BSY plane_no LINK link_no

and press the Enter key.

where

plane_no
is the number of the plane (0 or 1) for the link

NT2X36
in a digital carrier module (continued)

link_no
is the link number (0 to 63)

Example of a MAP response:

```
Request to MAN BUSY ENET Plane:0 Shelf:00 Slot:32 Link:01 submitted.
Request to MAN BUSY ENET Plane:0 Shelf:00 Slot:32 Link:01 passed.
```

18 Repeat step 17 for each link that you recorded in step 13. Go to step 19.

At the shelf

19

> **WARNING**
> **Static electricity damage**
> Wear a wrist strap that connects to the wrist-strap grounding point of a frame supervisory panel (FSP) or a modular supervisory panel (MSP) to handle circuit cards. The wrist strap protects the cards against static electricity damage.

To replace the card, perform the procedure *Replacing a card* in this document. Complete the procedure and return to this point.

Note: If the card that you replace has switches, make sure that the switches on the replacement card have the same settings.

20 The next action depends on the reason that you perform this procedure.

If a maintenance procedure	Do
directed you to this procedure	step 21
did not direct you to this procedure	step 22

21 Return to the maintenance procedure that directed you to this procedure and continue as directed.

At the MAP terminal

22 The next action depends on the type of network in the office.

If you	Do
are working on a JNET	step 23
are working on an ENET	step 25

NT2X36
in a digital carrier module (continued)

23 To return to service one of the network links that associates with the PM unit, type

>RTS plane_no link_no

and press the Enter key.

where

plane_no
is the number of the plane (0 or 1) for the link

link_no
is the link number (0 to 63)

If the link	Do
returned to service and more manual busy links are present	step 24
returned to service and more manual busy links are not present	step 27
did not return to service	step 33

24 Repeat step 23 for all C-side links to the DCM.

Go to step 26.

25 To return the link to service, type

>RTS plane_no LINK link_no

and press the Enter key.

where

plane_no
is the number of the plane (0 or 1) for the link

link_no
is the link number (0 to 63)

Example of a MAP response:

```
Request to RTS ENET Plane:0 Shelf:00 Slot:32 Link:01 submitted.
Request to RTS ENET Plane:0 Shelf:00 Slot:32 Link:01 passed.
```

If the link	Do
returned to service	step 26
did not return to service	step 33

26 Repeat step 25 for all C-side links to the DCM. Complete the procedure and go to step 27.

NT2X36
in a digital carrier module (end)

27 To access the PM level of the MAP display, type

>PM

and press the Enter key.

28 To load the DCM, type

>LOADPM

and press the Enter key.

If the LOADPM command	Do
failed	step 29
passed	step 30

29 Perform the procedure *Loading a PM* in this document. Complete the procedure and return to this point.

30 To return the DCM to service, type

>RTS

and press the Enter key.

If the RTS command	Do
passed	step 34
passed, but the DCM is `ISTb` as a result of a command protocol violation	step 32
failed	step 33

31 To determine why the component is offline, consult operating company personnel. Continue as directed by operating company personnel.

32 A minor problem is present, but the DCM can process traffic. For additional help, contact the next level of support.

33 For additional help, contact the next level of support.

34 The procedure is complete.

NT3X65
in a digital echo suppressor

Application

Use this procedure to replace a NT3X65 card in a digital carrier module (DCM) digital echo suppressor (DES), as the following table shows.

PEC	Suffix	Card name	Shelf or frame name
NT3X65	AA	Digital echo suppressor tone CPU	DCM digital echo suppressor

Refer to the “Index", if you cannot identify the following features for the card that you want to replace:

- product engineering code (PEC)
- PEC suffix
- provisioned shelf
- provisioned frame

The “Index" contains a list of the cards, shelves, and frames this card replacement book.

Common procedures

This procedure refers to *Replacing a card*.

Do not go to the common procedure unless the step-action procedure directs you to go.

Action

This procedure contains a summary flowchart and a list of steps. Use the flowchart to review the procedure. Follow the steps to perform the procedure.

NT3X65
in a digital echo suppressor (continued)

Summary of replacing an NT3X65 in a digital echo suppressor

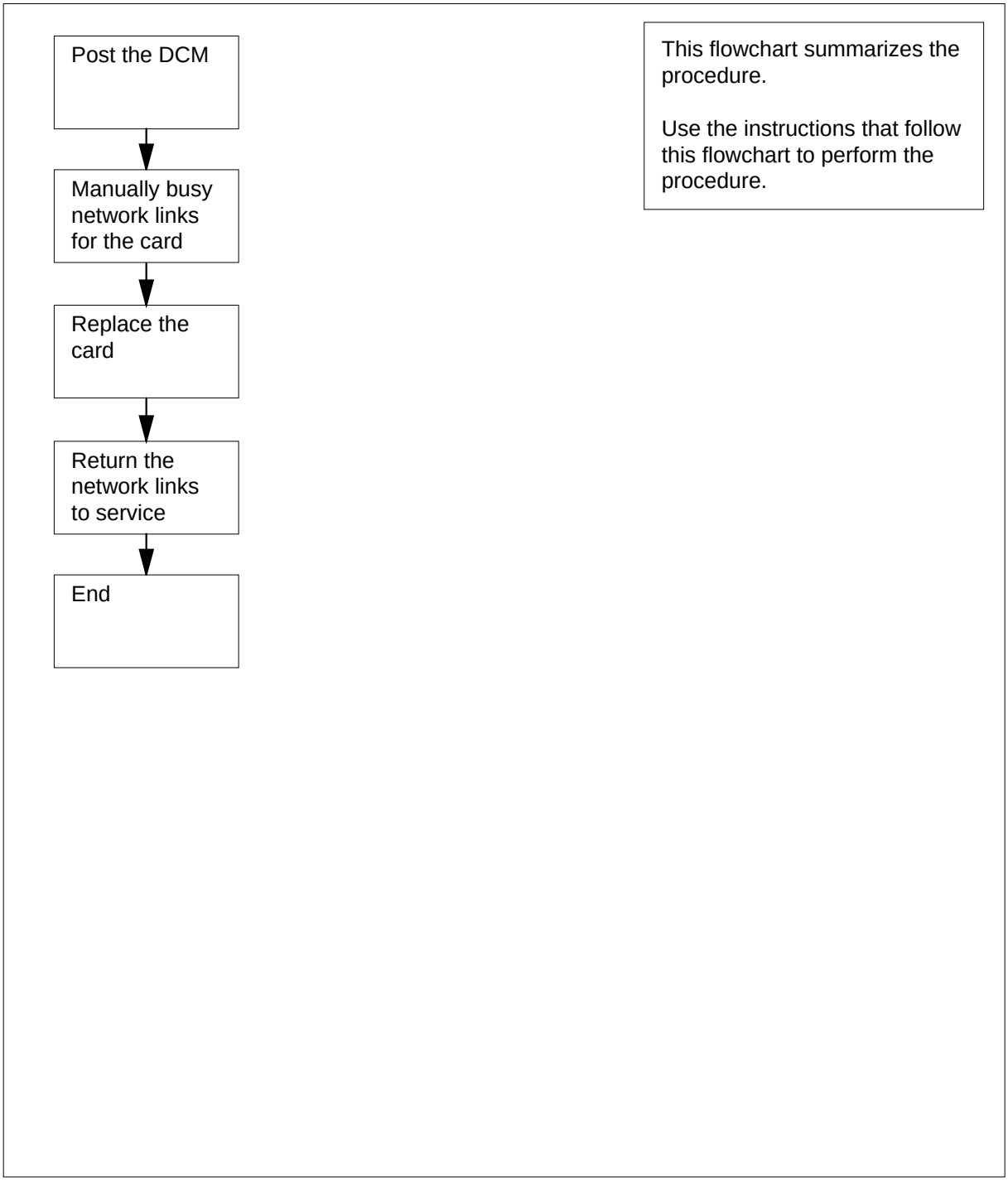

NT3X65
in a digital echo suppressor (continued)

Replacing NT3X65 in a digital echo suppressor

At the MAP terminal

1

> **CAUTION**
> **Potential loss of service**
> This procedure includes directions to manually busy network links. Service degradation can occur if you manually busy a network link. Perform this procedure only if you need to restore out-of-service components. In other events, perform this procedure during periods of low traffic.

Obtain a replacement card. Make sure that the replacement card has the same PEC and PEC suffix as the card you remove.

2 To access the PM level of the MAP display, type

>MAPCI;MTC;PM

and press the Enter key.

Example of a MAP display:

```
        SysB    ManB    OffL    CBsy    ISTb    InSv
 PM      6       1       0       0       23      24
```

3 To post the PM that associates with the card you replace, type

>POST DCM pm_no

and press the Enter key.

where

pm_no
is the PM number (0 to 511)

Example of a MAP display:

```
        SysB    ManB    OffL    CBsy    ISTb    InSv
 PM      6       1       0       0       23      24
 DCM     1       0       0       0       1       4
 DCM     0    InSv
```

4 To display a list of C-side links,type

>TRNSL C

NT3X65
in a digital echo suppressor (continued)

and press the Enter key.

Example #1 of a MAP response:

```
LINK  0: NET 0  1  1;CAP:MS;STATUS:OK    ,P;MsgCond:OPN
LINK  0: NET 1  1  1;CAP:MS;STATUS:OK    ,P;MsgCond:OPN
LINK  1: NET 0  1  5;CAP: S;STATUS:OK    ,P
LINK  1: NET 1  1  5;CAP: S;STATUS:OK    ,P
LINK  2: NET 0  1  9;CAP: S;STATUS:OK    ,P
LINK  2: NET 1  1  9;CAP: S;STATUS:OK    ,P
LINK  3: NET 0  1 13;CAP: S;STATUS:OK    ,P
LINK  3: NET 1  1 13;CAP: S;STATUS:OK
```

Example #2 of a MAP response:

```
LINK  0: ENET 0  0 18 04   ;CAP:MS;STATUS:OK  ,C ;MsgCond:OPN
LINK  0: ENET 1  0 28 04   ;CAP:MS;STATUS:OK  ,C ;MsgCond:OPN
LINK  1: ENET 0  0 18 05   ;CAP: S;STATUS:OK  ,C
LINK  1: ENET 1  0 28 05   ;CAP: S;STATUS:OK  ,C
LINK  2: ENET 0  0 18 06   ;CAP: S;STATUS:OK  ,C
LINK  2: ENET 1  0 28 06   ;CAP: S;STATUS:OK  ,C
LINK  3: ENET 0  0 18 07   ;CAP: S;STATUS:OK  ,C
LINK  3: ENET 1  0 28 07   ;CAP: S;STATUS:OK
```

5 Identify the links that associate with the card that you replace.

Note: Links correspond to NT3X65 cards as follows: link 0 = slot 3, link 1 = slot 4, link 2 = slot 5, link 3 = slot 6, link 4 = slot 7, and link 5 = slot 8.

6 The next step depends on the type of network in your office.

If the network	Do
is a junctor network (JNET)	step 7
is an enhanced network (ENET)	step 12

7 Record the JNET plane, pair, and link number for both links that associate with the card you replace.

Note: The network plane, pair, and link are in columns 4, 5, and 6 of the response to a TRNSL command at the PM level. Example #1 in step 4 demonstrates this response. For example, C-side link 3 at the bottom of the display is on network plane 1, pair 1, link 13.

8 To access the NET level of the MAP display, type

>NET

and press the Enter key.

Example of a MAP display:

```
 Net                      11111  11111  22222  22222  33
 Plane  01234  56789     01234  56789  01234  56789  01
    0    L..
    1    ...
```

9 To access the LINKS level of the MAP display, type

>LINKS pair_no

and press the Enter key.

where

pair_no
is the number of the pair (0 to 31) that connects to the C-side links

Example of a MAP display:

```
Net                     11111  11111  22222  22222  33
 PlNet ane  01234  56789  01234  56789  01234  56789  01
   0    L..
   1    ...
Net   1  Links               11  1111  1111  2222  2222  2233
       Plane   0123  4567  8901  2345  6789  0123  4567  8901
         0     ....  ....  ..P.  ....  .P..  .P..  .P..  .P..
         1     ....  ....  ..P.  ....  .P..  .P..  .P..  .P..
        Links  3333  3333  4444  4444  4455  5555  5555  6666
       Plane   2345  6789  0123  4567  8901  2345  6789  0123
         0     .P..  .P..  .P..  .P..  ..P.  ..-.  ..-.  ..-.
         1     .P..  .P..  .P..  .P..  ..P.  ..-.  ..-.  ..-.
```

10 To manually busy one of the links that you recorded in step 7, type

>BSY plane_no link_no

and press the Enter key.

where

plane_no
is the number of the plane for the link (0 or 1)

link_no
is the link number (0 to 63)

Example of a MAP response:

```
BSY 0 30OK
```

11 Repeat step 10 for the other C-side links.

Complete the procedure and go to step 18.

NT3X65
in a digital echo suppressor (continued)

12 Record the ENET plane, shelf, card, and link number for both links that associate with the card you replace.

Note 1: The NT2X36 network interface card supports eight C-side links for each card - four links to each network plane.

Note 2: The network plane, shelf, card, and link are in columns 4, 5, 6, and 7 of the response to a TRNSL command at the PM level. Example #2 in step 4 demonstrates this response. For example, C-side link 3 at the bottom of the display is on network plane 1, shelf 0, card 28, link 07.

13 To access the NET level of the MAP display, type

>NET

and press the Enter key.

Example of a MAP display:

```
ENET     System   Matrix  Shelf 0 1 2 3 .
 Plane 0 CSLink                F - - -
 Plane 1 CSLink     .          F - - -

ENET:
```

14 To access the SHELF level of the MAP display, type

>SHELF shelf_no

and press the Enter key.

where

shelf_no
is the number of the shelf (0 to 7) that connects to the C-side links

Example of a MAP display:

```
ENET     System   Matrix  Shelf 0 1 2 3
 Plane 0 CSLink     .          F - - -
 Plane 1 CSLink     .          F - - -

SHELF 00  Slot         1111111 11122222 22222333 333333
            123456 78 90123456 78901234 56789012 345678
Plane 0    .  .   IF ....---- -------- ----.... .  .
Plane 1    .  .   IF ....---- -------- ----.... .  .
```

15 To access the CARD level of the MAP display, type

>CARD card_no

and press the Enter key.

where

card_no
is the number of the card (1 to 38) that connects to the C-side links

Example of a MAP display:

NT3X65
in a digital echo suppressor (continued)

```
ENET     System   Matrix  Shelf 0 1 2 3
 Plane 0 CSLink     .           F - - -
 Plane 1 CSLink     .           F - - -

SHELF 00  Slot         1111111 11122222 22222333 333333
            123456 78 90123456 78901234 56789012 345678
Plane 0    .  .   IF ...---- -------- ----.... .  .
Plane 1    .  .   IF ...---- -------- ----.... .  .

 CARD 32   Front:     Back:   DS-512 Links
           Xpt        I/F    0 1 2 3
 Plane 0    .          .     . . . -
 Plane 1    .          .     . . . -
```

16 To manually busy the link that you recorded in step 12, type

>BSY plane_no LINK link_no

and press the Enter key.

where

plane_no
is the number of the plane (0 or 1) for the link

link_no
is the link number (0 to 63)

Example of a MAP response:

```
Request to MAN BUSY ENET Plane:0 Shelf:00 Slot:32 Link:01
submitted.

Request to MAN BUSY ENET Plane:0 Shelf:00
Slot:32 Link:01 passed.
```

17 Repeat step 16 for the other link that associates with the card you replace. Go to step 18.

NT3X65
in a digital echo suppressor (continued)

At the shelf

18

> **WARNING**
> **Static electricity damage**
> Wear a wrist strap that connects to the wrist-strap grounding point of a frame supervisory panel (FSP) or a modular supervisory panel (MSP) to handle circuit cards. The wrist strap protects the cards against static electricity damage.

To replace the card, perform the procedure *Replacing a card* in this document. Complete the procedure and return to this point.

Note: If the card you replace has switches, make sure that the switches on the replacement card have the same settings.

19 The next action depends on the reason that you perform this procedure.

If a maintenance procedure	Do
directed you to this procedure	step 20
did not direct you to this procedure	step 21

20 Return to the maintenance procedure that directed you to this procedure and continue as directed.

At the MAP terminal

21 The next action depends on the type of network in the office.

If you	Do
are working on a JNET	step 22
are working on an ENET	step 24

22 To return to service one of the JNET links that associates with the PM unit, type

`>RTS plane_no link_no`

and press the Enter key.

where

plane_no
is the number of the plane (0 or 1) for the link

NT3X65
in a digital echo suppressor (continued)

link_no
is the link number (0 to 63)

If the link	Do
returned to service and one more manual-busy link is present	step 23
returned to service and more manual busy links are not present	step 29
did not return to service	step 28

23 Repeat step 22 for the other link.

Go to step 29.

24 Return to service one of the ENET links that associates with the PM unit, type

`>RTS plane_no LINK link_no`

and press the Enter key.

where

plane_no
is the number of the plane (0 or 1) for the link

link_no
is the link number (0 to 63)

Example of a MAP response:

```
Request to RTS ENET Plane:0 Shelf:00 Slot:32 Link:01
submitted.

Request to RTS ENET Plane:0 Shelf:00 Slot:32
Link:01 passed.
```

If the link	Do
returned to service and one more manual-busy link is present	step 25
returned to service and more manual-busy links are not present	step 29
did not return to service	step 28

25 Repeat step 24 for the other link. Complete the procedure and go to step 29.

26 To determine why the component is offline, consult operating company personnel. Continue as directed by operating company personnel.

NT3X65
in a digital echo suppressor (end)

27 A minor problem is present, but the DCM can process traffic. For additional help, contact the next level of support.

28 For additional help, contact the next level of support.

29 The procedure is complete.

Power converter cards in a digital carrier module

Application

Use this procedure to replace the following cards in the shelves or frames listed.

PEC	Suffix	Card name	Shelf or frame name
NT2X06	AA	Power converter card	Digital carrier module (DCM), Digital echo suppressor (DES)
NT2X07	AA	Power converter card	DCM, DES
NT2X70	AA, AB, AC, AD	-48V power converter card	DCM, DES

Refer to the “Index", if you cannot identify the following features for the card that you want to replace:

- product engineering code (PEC)
- PEC suffix
- provisioned shelf
- provisioned frame

The Index contains a list of the cards, shelves, and frames documented in this card replacement book.

Common procedures

This procedure refers to the following common procedures:

- *Replacing a card*
- *Loading a PM*

Do not go to the common procedure unless the step-action procedure directs you to go.

Action

This procedure contains a summary flowchart and a list of steps. Use the flowchart to review the procedure. Follow the steps to perform the procedure.

Power converter cards in a digital carrier module (continued)

Summary of replacing Power converter cards in a digital carrier module

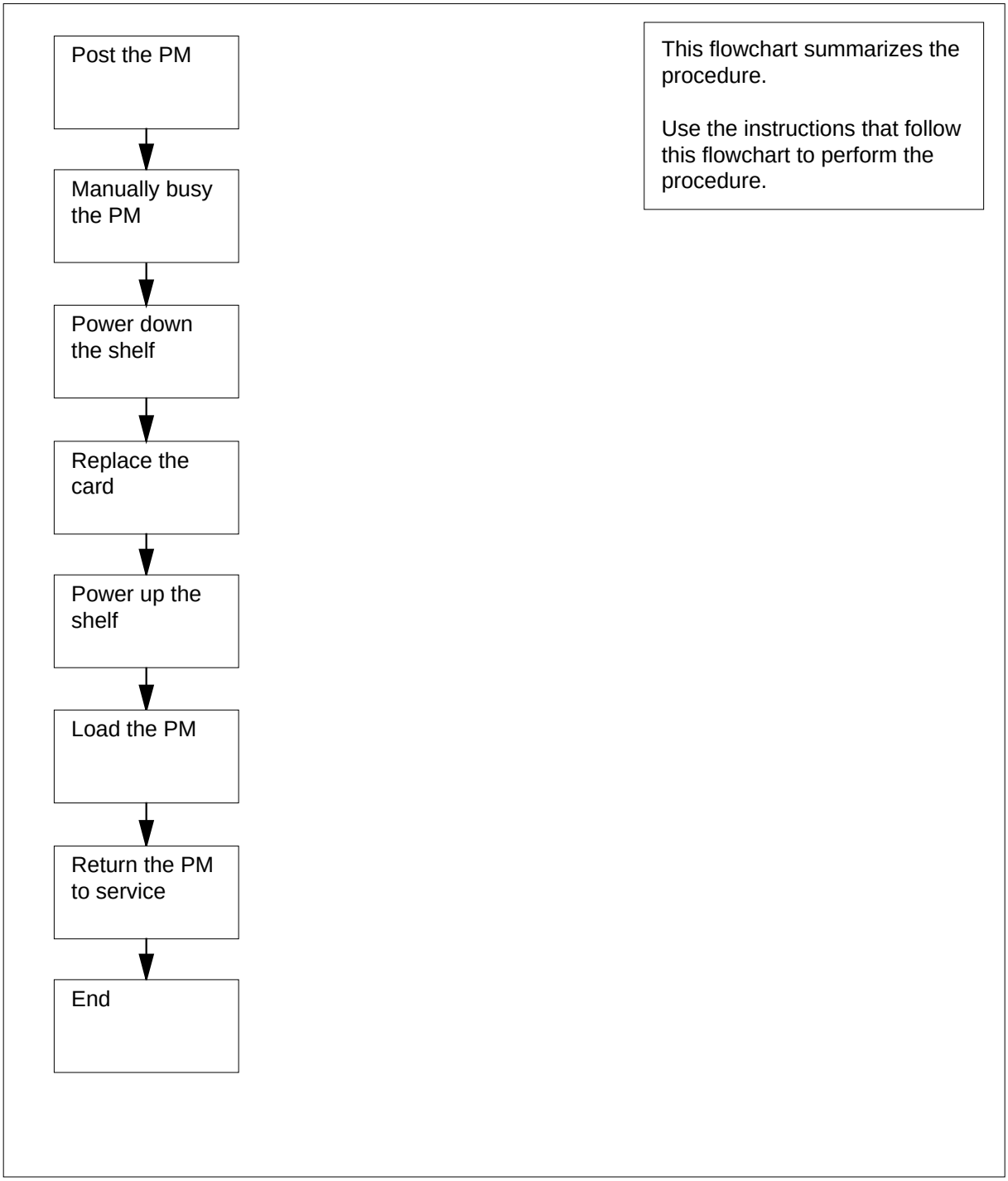

Power converter cards in a digital carrier module (continued)

Replacing Power converter cards in a digital carrier module

At the MAP terminal

1

> **WARNING**
> **Loss of service**
> This procedure includes directions to manually busy a DCM or DES. Service power failure can occur if you manually busy a DCM or DES. Perform this procedure only if you need to restore out-of-service components. In other events, perform this procedure during periods of low traffic.

Obtain a replacement card. Make sure that the replacement card has the same PEC and PEC suffix, as the card that you remove.

2 To access the PM level of the MAP display, type

>MAPCI;MTC;PM

and press the Enter key.

Example of a MAP display:

```
        SysB    ManB    OffL    CBsy    ISTb    InSv
 PM        6       1       0       0      23      24
```

3 To post the PM that associates with the card you replace, type

>POST pm_type pm_no

and press the Enter key.

where

pm_type
is the type of PM (DCM, DES)

pm_no
is the PM number (0 to 511)

Example of a MAP display:

```
         SysB    ManB    OffL    CBsy    ISTb     InSv
    PM      6       1       0       0      23       24
    DCM     1       0       0       0       1       4

DCM      0    InSv
```

Power converter cards in a digital carrier module (continued)

4 Determine the state of the PM unit that associates with the card you want to replace.

If the state of the PM unit	Do
is `ISTb`, `InSv`, `SysB`, or `CBsy`	step 5
is ManB	step 7
is OffL	step 23

5 A maintenance flag (Mtce) can appear. A Mtce flag indicates that system-initiated maintenance tasks are in progress. Wait until the flag disappears from the status line before you proceed to the next step.

6 To manually busy the PM, type

>BSY

and press the Enter key.

Example of a MAP response:

```
OK.DCM 0 Bsy
```

If the BSY command	Do
passed	step 7
failed	step 25

At the shelf

7

WARNING
Static electricity damage
Wear a wrist strap that connects to the wrist-strap grounding point of a frame supervisory panel (FSP) or a modular supervisory panel (MSP) to handle circuit cards. The wrist strap protects the cards against static electricity damage.

For the power converter you replace, pull down and set the handle of the POWER switch to the OFF position.

8 The next action depends on the power configuration of the shelf.

If the shelf	Do
has a single NT2X70	step 10

Power converter cards in a digital carrier module (continued)

If the shelf	Do
has an NT2X06 and an NT2X07	step 9

9 For the mate power converter, pull down and set the handle of the POWER switch to the OFF position.

10 To replace the card, perform the procedure *Replacing a card* in this document. Complete the procedure and return to this point.

Note 1: Make sure that the handle of the POWER switch on the replacement power converter is in the OFF position.

Note 2: If the card you replace has switches, make sure that the switches on the replacement card have the same settings.

11 The next action depends on the reason that you perform this procedure.

If a maintenance procedure	Do
directed you to this procedure	step 12
did not direct to this procedure	step 13

12 Return to the maintenance procedure that directed you to this procedure and continue as directed.

13 The next action depends on the power converter version and the type of supervisory panel.

If you	Do
replace an NT2X70AE card and the FSP or MSP has circuit breakers	step 14
replace an NT2X70AE card and the FSP or MSP does not have circuit breakers	step 15
do not replace an NT2X70AE card and the FSP or MSP has circuit breakers	step 16
do not replace an NT2X70AE card and the FSP or MSP does not have circuit breakers	step 17

14 Power up the converter.

a Pull up and set the handle of the POWER switch to the RESET position and hold the POWER switch.

b Set the handle of the converter circuit breaker on the FSP or MSP up until the handle clicks into place.

c Release the handle of the POWER switch.

d Go to step 20.

Power converter cards in a digital carrier module (continued)

15 Power up the converter, as follows.

- **a** Pull up and set the handle of the POWER switch to the RESET position. Hold the switch until the CONVERTER FAIL LED goes off.
- **b** Release the handle of the POWER switch.
- **c** Go to step 20.

16 Power up the converter, as follows.

- **a** Pull up and set the handle of the POWER switch to the ON position.
- **b** Press and hold the RESET button on the power converter.
- **c** Set the handle of the converter circuit breaker on the FSP or MSP up until the handle clicks into place.
- **d** Release the RESET button.
- **e** Go to step 20.

17 Power up the converter.

- **a** Pull up and set the handle of the POWER switch to the ON position.
- **b** Press the RESET button on the power converter until the CONVERTER FAIL LED goes off.
- **c** Release the RESET button.

18 The next action depends on the number of power converters on the shelf.

If	Do
one power converter is present	step 20
two power converters are present, and you powered up both power converters	step 20
two power converters are present, and you powered up only one of the power converters	step 19

19 Repeat steps 13 to 18 for the other power converter on the shelf.

At the MAP terminal

20 To load the PM, type

```
>LOADPM
```

and press the Enter key.

If the LOADPM command	Do
failed	step 21
passed	step 22

21 Perform the procedure *Loading a PM* in this document. Complete the procedure and return to this point.

Power converter cards in a digital carrier module (end)

22 To return the PM to service, type

>RTS

and press the Enter key.

If the RTS command	Do
passed	step 26
passed, but the PM is `ISTb` as a result of a command protocol violation	step 24
failed	step 25

23 To determine why the component is offline, consult operating company personnel. Continue this procedure as directed by operating company personnel.

24 A minor problem is present, but the PM can process traffic. For additional help, contact the next level of support.

25 For additional help, contact the next level of support.

26 The procedure is complete.

5 Enhanced link peripheral processor card replacement procedures

Introduction

This chapter contains card replacement procedures for the enhanced link peripheral processor (ELPP). The first section in the chapter provides diagrams that show ELPP shelf designs.

Card replacement procedures for the frame supervisory panel (FSP) and modular supervisory panel (MSP) appear in the chapter “Frame supervisory panel and modular supervisory panel card replacement procedures."

Each procedure contains the following sections:

- Application
- Common procedures
- Action

Application

This section identifies the ELPP cards that this procedure covers.

Common procedures

This section lists common procedures that you use during the ELPP card replacement procedure. A common procedure is a series of steps that repeat in maintenance procedures. An example of a common procedure is the removal and replacement of a card. Common procedures appear in the common procedures chapter in this NTP.

Do not go to common procedures unless the step-action procedure instructs you to go.

Action

This procedure contains a summary flowchart and a list of steps. Use the flowchart to review the procedure. Follow the steps to perform the procedure.

Recording card replacement activities

Record the following information in office records when you replace a card.

- the serial number of the card you replaced
- the date you replaced the card
- the reason you replaced the card

ELPP shelf layouts

Application

This section shows frame layouts for the enhanced link peripheral processor (ELPP), as follows:

- triple F-bus configuration in an ELPP cabinet
- a link interface module (LIM) with LMS units 0 and 1
- a link interface shelf (LIS) with common fill cards
- a LIS with a dual link interface unit (DLIU)

A DLIU is a set of high-speed link (HSL) termination hardware. Each set consists of:

- a high-speed link interface unit (HLIU)
- a high-speed link router (HSLR)

Note: The diagrams that follow show standard frame and shelf layouts. Minor differences can occur in different offices.

ELPP shelf layouts (continued)

Figure Enhanced link peripheral processor

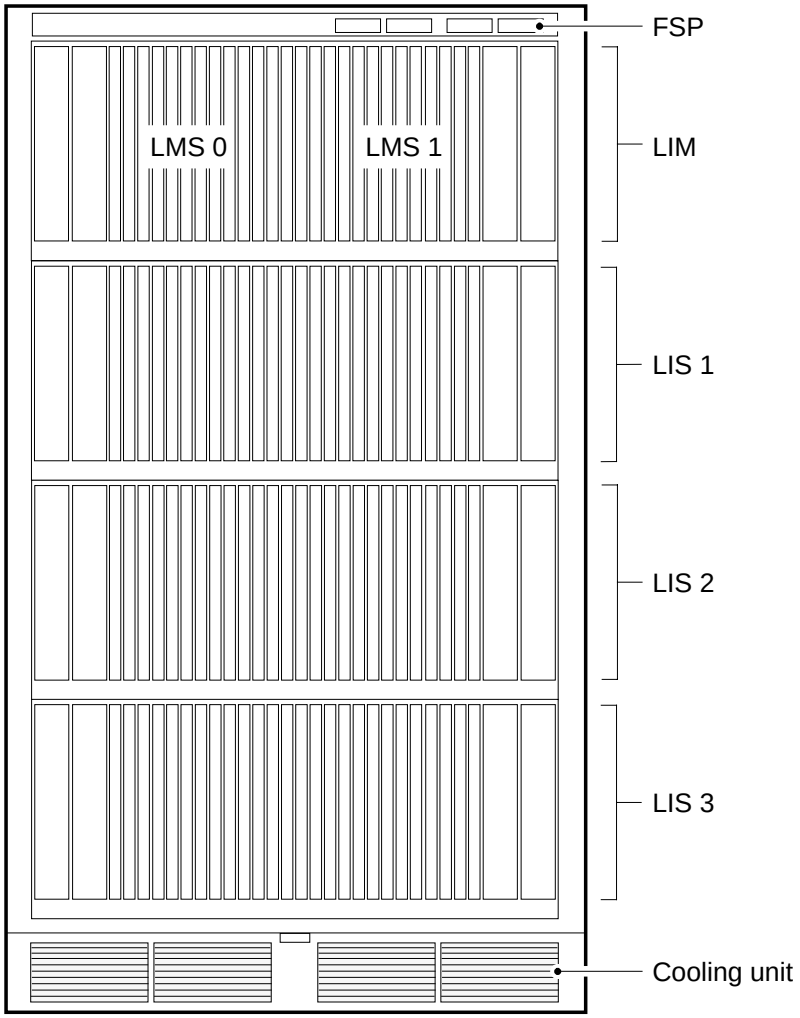

Legend:

FSP	Frame supervisory panel
LIM	Link interface module
LIS	Link interface shelf
LMS	Local message switch

ELPP shelf layouts (continued)

Figure Triple F-bus configuration in an ELPP cabinet

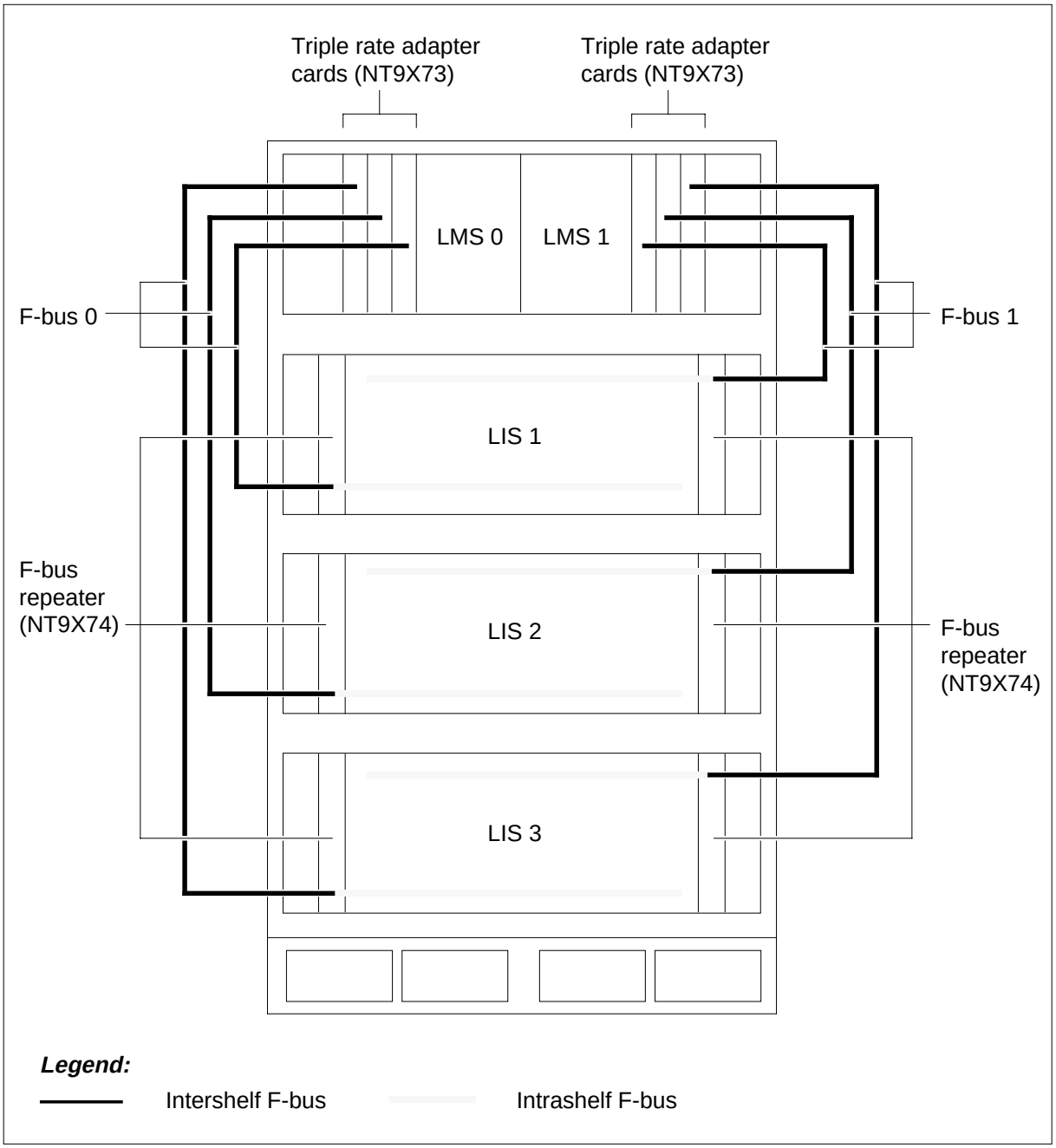

ELPP shelf layouts (continued)

Figure Link interface module with LMS 0 and LMS 1 (triple F-bus configuration)

	Paddle boards	*Cards*	
		NT9X30 Power (+5 V)	36F
		NT9X31 Power (–5 V)	33F
32R	NT9X19 Filler	**NT**9X49 P-bus terminator	32F
31R	NT9X19 Filler	NT9X19 Filler	31F
30R	NT9X62	NT9X17 4 port interface card	30F
29R	NT9X62	NT9X17 4 port interface card	29F
28R	NT9X79 F-bus extension PB	NT9X73 F-bus rate adapter card	28F
27R	NT9X79 F-bus extension PB	NT9X73 F-bus rate adapter card	27F
26R	NT9X79 F-bus extension PB	NT9X73 F-bus rate adapter card	26F
25R	NT9X19 Filler	NT9X19 Filler	25F
24R	NT9X19 Filler	NT9X15 Mapper card	24F
23R	NT9X19 Filler	NT9X19	23F
22R	NT9X26 RTIF PB	NT9X13 LMS processor card	22F
21R	NT9X19 Filler	NT9X53 Clock card	21F
20R	NT9X19 Filler	NT9X52 T-bus access card	20F
19R	NT9X19 Filler	NT9X52 T-bus access card	19F
18R	NT9X19 Filler	NT9X53 Clock card	18F
17R	NT9X26 RTIF PB	NT9X13 LMS processor card	17F
16R	NT9X19 Filler	NT9X19 Filler	16F
15R	NT9X19 Filler	NT9X15 Mapper card	15F
14R	NT9X19 Filler	NT9X19 Filler	14F
13R	NT9X79 F-bus extension PB	NT9X73 F-bus rate adapter card	13F
12R	NT9X79 F-bus extension PB	NT9X73 F-bus rate adapter card	12F
11R	NT9X79 F-bus extension PB	NT9X73 F-bus rate adapter card	11F
10R	NT9X62	NT9X17 4 port interface card	10F
09R	NT9X62	NT9X17 4 port interface card	09F
08R	NT9X19 Filler	NT9X19 Filler	08F
07R	NT9X19 Filler	NT9X49 P-bus terminator	07F
		NT9X30 Power (+5 V)	04F
		NT9X31 Power (–5 V)	01F

Rear *Front*

ELPP shelf layouts (continued)

Figure Link interface shelf with common fill cards

	Paddle boards		*Cards*		
			NT9X30	Power converter card	36F
			NT9X19	Filler faceplate	33F
32R	NT9X79	F-bus extender PB	NT9X74	F-bus repeater card	32F
31R					31F
30R	NTEX20	F-bus terminator PB			30F
29R					29F
28R	NT9X19	Filler faceplate			28F
27R					27F
26R	NT9X19	Filler faceplate			26F
25R					25F
24R	NT9X19	Filler faceplate			24F
23R					23F
22R	NT9X19	Filler faceplate			22F
21R					21F
20R	NT9X19	Filler faceplate			20F
19R					19F
18R	NT9X19	Filler faceplate			18F
17R					17F
16R	NT9X19	Filler faceplate			16F
15R					15F
14R	NT9X19	Filler faceplate			14F
13R					13F
12R	NT9X19	Filler faceplate			12F
11R					11F
10R	NT9X19	Filler faceplate			10F
09R					09F
08R	NTEX20	F-bus terminator PB			08F
07R	NT9X79	F-bus extender PB	NT9X74	F-bus repeater card	07F
			NT9X30	Power converter card	04F
			NT9X19	Filler faceplate	01F

Rear *Front*

Note 1: Slots for ASUs are outlined in gray.

ELPP shelf layouts (end)

Note 2: Instead of NT9X30 card, you can use an NT9X16 power converter card. If you do that, you also must use NT9X16 card instead of NT9X19 card.

Link interface shelf with a DLIU

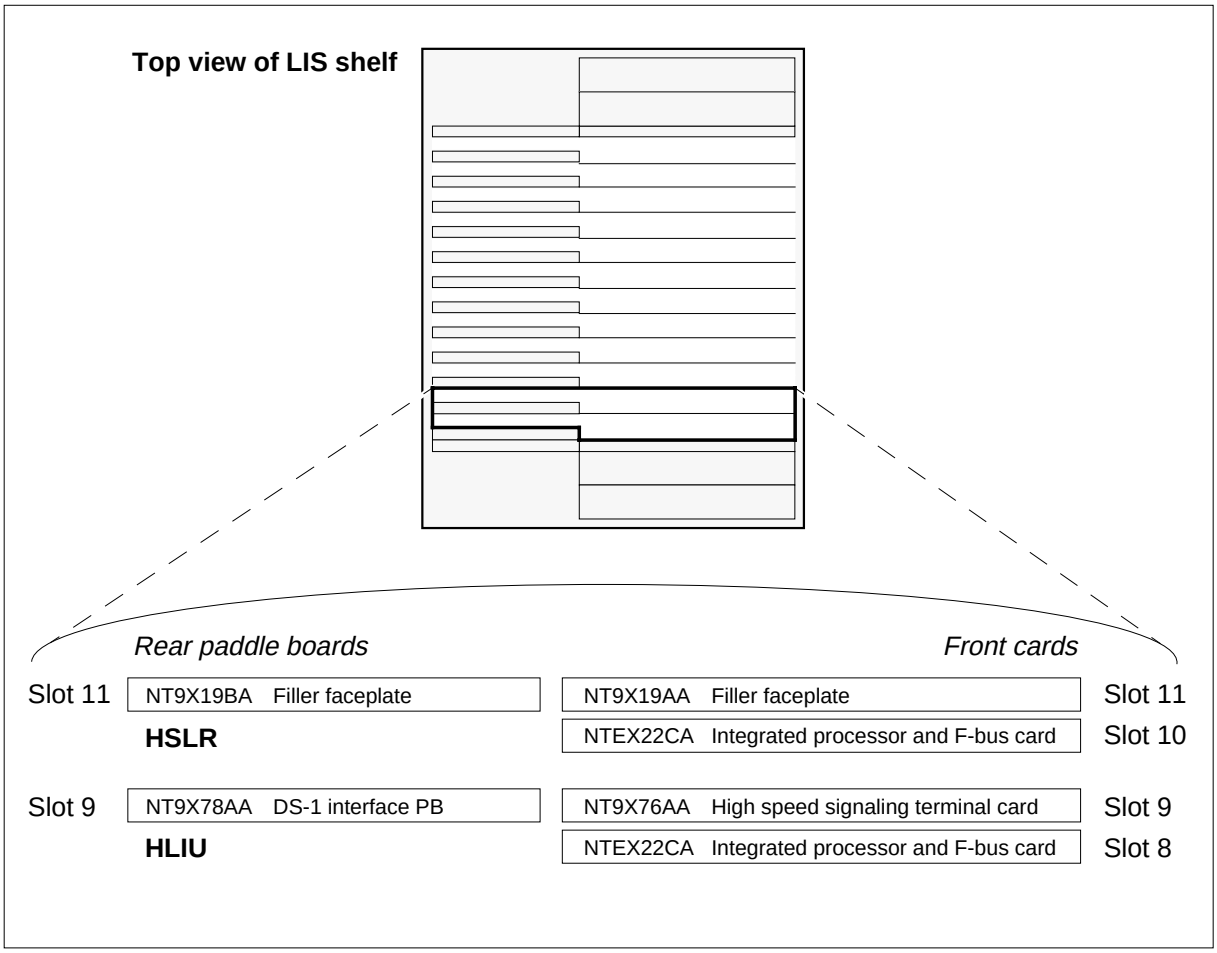

Note: The DLIU set, which consists of three HLIU cards and one HSLR card, must start in slot number 8, 12, 16, 20, 24, or 28.

Common fill paddle boards in an ELPP LIS

Application

Use this procedure to replace the following cards in a link interface shelf (LIS) in an enhanced link peripheral processor (ELPP).

If you cannot identify the product engineering code (PEC), suffix, or provisioned shelf or frame for the card you want to replace, refer to the “Index" for a list of the cards, shelves, and frames documented in this card replacement book.

Common fill paddle boards for an ELPP LIS

PEC	Suffix	Card name	Shelf or frame name
NT9X74	DA	F-bus repeater	LIS in an ELPP
NT9X79	BA	F-bus termination paddle board	LIS in an ELPP
NTEX20	AA, BA	Intrashelf termination paddle board	LIS in an ELPP

Note 1: A link interface module (LIM) is also referred to as a local message switch (LMS) in some documentation. LIM unit 0 corresponds to LMS 0; LIM unit 1 corresponds to LMS 1. In MAP commands, responses, and displays, the term LIM unit is used to designate an LMS.

Note 2: The ELPP is referred to as a LIM when the entire ELPP is meant, paralleling how the LISs in the ELPP are closely associated with the LIM. MAP displays and data schema tables also refer to the ELPP as a LIM.

Common procedures

Replacing a card is referenced in this procedure.

Do not go to the common procedure unless directed to do so in the step-action procedure.

Action

The following flowchart is only a summary of the procedure. To replace the card, use the instructions in the step-action procedure that follows the flowchart.

Common fill paddle boards in an ELPP LIS (continued)

Summary of Replacing Common fill paddle boards in an ELPP LIS

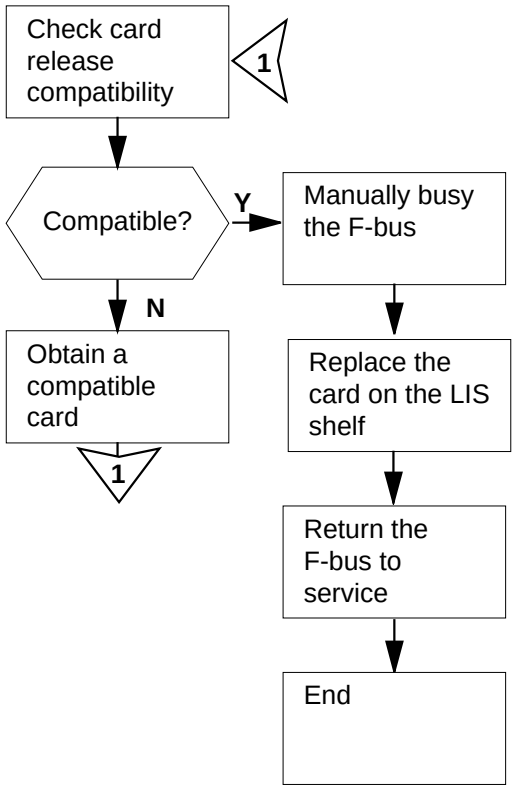

This flowchart summarizes the procedure.

Use the instructions in the procedure that follows this flowchart to perform the procedure.

Common fill paddle boards in an ELPP LIS (continued)

Replacing Common fill paddle boards in an ELPP LIS

At your current location

1

> **CAUTION**
> **Loss of service**
> This procedure provides instructions for removing an F-bus from service, thereby removing redundancy from the ELPP. Perform this procedure only if it is necessary to return the F-buses to service. Otherwise, perform this procedure only during periods of low traffic.

Obtain a replacement card. Ensure that the replacement card has the same PEC, including suffix, as the card being removed.

At the MAP terminal

2 Ensure that the replacement card is compatible with the software load by typing

```
>CHECKREL  LIS  pec  release
```

and pressing the Enter key.

where

pec
is the PEC and suffix of the new card

release
is the two-character code located on the faceplate of thereplacement card

Example input:

```
>CHECKREL  LIS  NT9X74DA  2Z
```

Example of a MAP response:

```
   PEC    BASELINE    EXCEPT    RELEASE     COMPATIBLE
NT9X74DA        09      None        2Z           YES
OK. Card release is above baseline.
```

If the replacement card is	Do
below baseline	step 3
on or above baseline	step 6

Common fill paddle boards in an ELPP LIS (continued)

3 From the MAP display, record the baseline release code (BASELINE) and any exception release codes (EXCEPT).

4 Determine which release codes are compatible with the software load in the switch. A compatible release code is one that is

- greater than or equal to the baseline release code, and
- not an exception release code

Note: The range of release codes in ascending order is 01 to 09, 0A to 0Z, and 10 to VZ.

5 Obtain a replacement card with a compatible release code.

If you	Do
can obtain a compatible replacement card	step 2
cannot obtain a compatible replacement card	step 21

6 Access the PM level of the MAP display by typing

>MAPCI;MTC;PM

and pressing the Enter key.

Example of a MAP display:

```
             SysB   ManB    OffL    CBsy    ISTb    InSv
PM            0      0      28       0       0      18
```

7 Post the LIM associated with the card you are replacing by typing

>POST LIM lim_no

and pressing the Enter key.

where

lim_no
is the number of the LIM (0 to 16)

Note: Refer to the table located at the end of this document to identify the LIM unit associated with the card you are replacing.

Example of a MAP display:

```
                SysB    ManB    OffL    CBsy    ISTb
PM              0       0      28       0       0
LIM             0       0       1       0       0
0 InSv                    OOS    OOS Taps
```

8 Determine the state of the LIM.

Note: The state of the LIM is shown to the right of the LIM number on the MAP display.

If the state of the LIM is	Do
`Offl`	step 20

Common fill paddle boards in an ELPP LIS (continued)

If the state of the LIM is	Do
any other in-service or out-of-service state	step 9

9 Determine the state of the mate LIM unit. Refer to the table located at the end of this document to identify the LIM associated with the card you are replacing.

Note: The state of the LIM units is shown to the right of the LIM unit number on the MAP display.

If the state of the mate LIM unit is	Do
InSv	step 10
anything else	step 18

10 Access the LIS level of the MAP display by typing

>LIS lis_no

and pressing the Enter key.

where

lis_no
is the number of the LIS (1, 2, or 3)

Example of a MAP display:

```
          SysB    ManB    OffL    CBsy    ISTb    InSv
     PM     0       0      28       0       0      18
     LIM    0       0       1       0       0       1
LIM  0 InSv
                  OOS   OOS_Taps
                   Links   LIS1  LIS2  LIS3
Unit0: InSv          .      .     .     .
Unit1: InSv          .      .     .     .

       LIS2        Tap:   0     4     8
FBus0: InSv             ....  ....  ....
FBus1: InSv             ....  ....  ....
```

Common fill paddle boards in an ELPP LIS (continued)

11

> **CAUTION**
> **Potential loss of service**
> Ensure that the mate F-bus, and the F-bus taps on the mate are in service before manually busying the F-bus associated with the card to be replaced. Manually busying the F-bus isolates nodes on the LIS if the mate resources are out of service.

Determine the states of the F-bus and the provisioned F-bus taps for the mate LIM unit.

Note: The state of the F-buses is shown to the right of the F-bus numbers on the MAP display. Refer to the table located at the end of this document to identify the LIM and F-bus components associated with the card you are replacing.

If the states are	Do
in-service (state of the F-bus is `InSv` and all F-bus taps are either `.` (dot) or - (dash).	step 12
any other state (state of the F-bus is not `InSv` and one or more F-bus taps are not either `.` (dot) or - (dash)	step 19

12 Manually busy the F-bus associated with the card to be replaced by typing

`>BSY FBUS fbus_no`

and pressing the Enter key.

where

fbus_no
is the number of the F-bus (0 or 1)

Note: Refer to the table located at the end of this document to identify the F-bus components associated with the card you are replacing.

Example of a MAP response:

```
LIM 0 LIS 1 FBus 0 Busy requires confirmation
Please confirm ("YES", "Y", "NO", or "N"):
```

If	Do
the command passes	step 14
you must confirm the command	step 13

Common fill paddle boards in an ELPP LIS (continued)

13 Confirm the command by typing

>YES

and pressing the Enter key.

Example of a MAP response:

```
LIM 0 LIS 2 FBus 0 Busy initiated.
LIM 0 LIS 2 FBus 0 Busy passed.
```

At the shelf

14

> **WARNING**
> **Static electricity damage**
> Wear a wrist strap connected to the wrist-strap grounding point of a frame supervisory panel (FSP) or a modular supervisory panel (MSP) while handling circuit cards. This protects the cards against damage caused by static electricity.

Replace the card using the procedure *Replacing a card* in this document. When you have completed the procedure, return to this point.

Note: If the card to be replaced has switches, ensure that the switches on the replacement card have the same settings.

15 The next action depends on your reason for performing this procedure.

If you were	Do
sent to this procedure from another maintenance procedure	step 16
not sent to this procedure from another maintenance procedure	step 17

16 Return to the maintenance procedure that sent you to this procedure and continue as directed.

17 Return the F-bus to service by typing

>RTS FBUS fbus_no

and pressing the Enter key.

where

fbus_no
is the number of F-bus (0 or 1)

Example of a MAP response:

Common fill paddle boards in an ELPP LIS (end)

```
LIM 0 LIS 2 FBus 0 Return to Service initiated.
LIM 0 LIS2 FBus 0 Return to Service passed.
```

If the RTS command	Do
passed	step 22
failed	step 21

18 Continuing with this procedure removes the entire LIM from service, thereby isolating application specific units (ASU) on the LIS. Consult office personnel or your next level of support to determine if you should continue with this procedure, and proceed as directed.

19 Continuing with this procedure isolates one or more application specific units (ASU) on the LIS. Consult office personnel or your next level of support to determine if you should continue with this procedure, and proceed as directed.

20 Consult office personnel to determine why the component is offline. Continue as directed by office personnel.

21 For further assistance, contact the personnel responsible for the next level of support.

22 You have completed this procedure.

Common fill paddle boards and associated LIM components

PEC	Slot	Associated LIM and F-buses	
NT9X74	07F		
NT9X79	07R	LIM unit number: Mate LIM unit number:	0 1
NTEX20	30R	F-bus number: Mate F-bus number:	0 1
NT9X74	32F		
NT9X79	32R	LIM unit number: Mate LIM unit number:	1 0
NTEX20	08R	F-bus number: Mate F-bus number:	1 0

Note: A LIM unit is also referred to as an LMS. LIM unit 0 corresponds to LMS 0; LIM unit 1 corresponds to LMS 1. In MAP commands, responses, and displays, the term LIM unit is used to mean an LMS. The term LIM is also used to include the ELPP where the entire ELPP cabinet is meant.

HLIU cards in an ELPP LIS

Application

Use this procedure to replace the following cards in a high-speed link interface unit (HLIU) in an enhanced link peripheral processor (ELPP) link interface shelf (LIS).

If you cannot identify the product engineering code (PEC), suffix, or provisioned shelf or frame for the card you want to replace, refer to the Index for a list of the cards, shelves, and frames documented in this card replacement NTP.

PEC	Suffix	Card name	Shelf or frame name
NTEX22	CA	Integrated processor and F-bus interface card	HLIU in an ELPP LIS
NTEX76	AA	High-speed signaling terminal card	HLIU in an ELPP LIS
NTEX78	AA	DS-1 interface paddle board	HLIU in an ELPP LIS

Common procedures

The following common procedures are referenced:

- *Activating CCS7 links*
- *Deactivating CCS7 links*
- *Loading a PM*
- *Replacing a card*
- *Reseating cards in equipment shelves*
- *Unseating cards in equipment shelves*

Do not go to the common procedure unless directed to do so in the step-action procedure.

Action

The following flowchart is only a summary of the procedure. To replace the card, use the instructions in the step-action procedure that follows the flowchart.

HLIU cards in an ELPP LIS (continued)

Summary of Replacing HLIU cards in an ELPP LIS

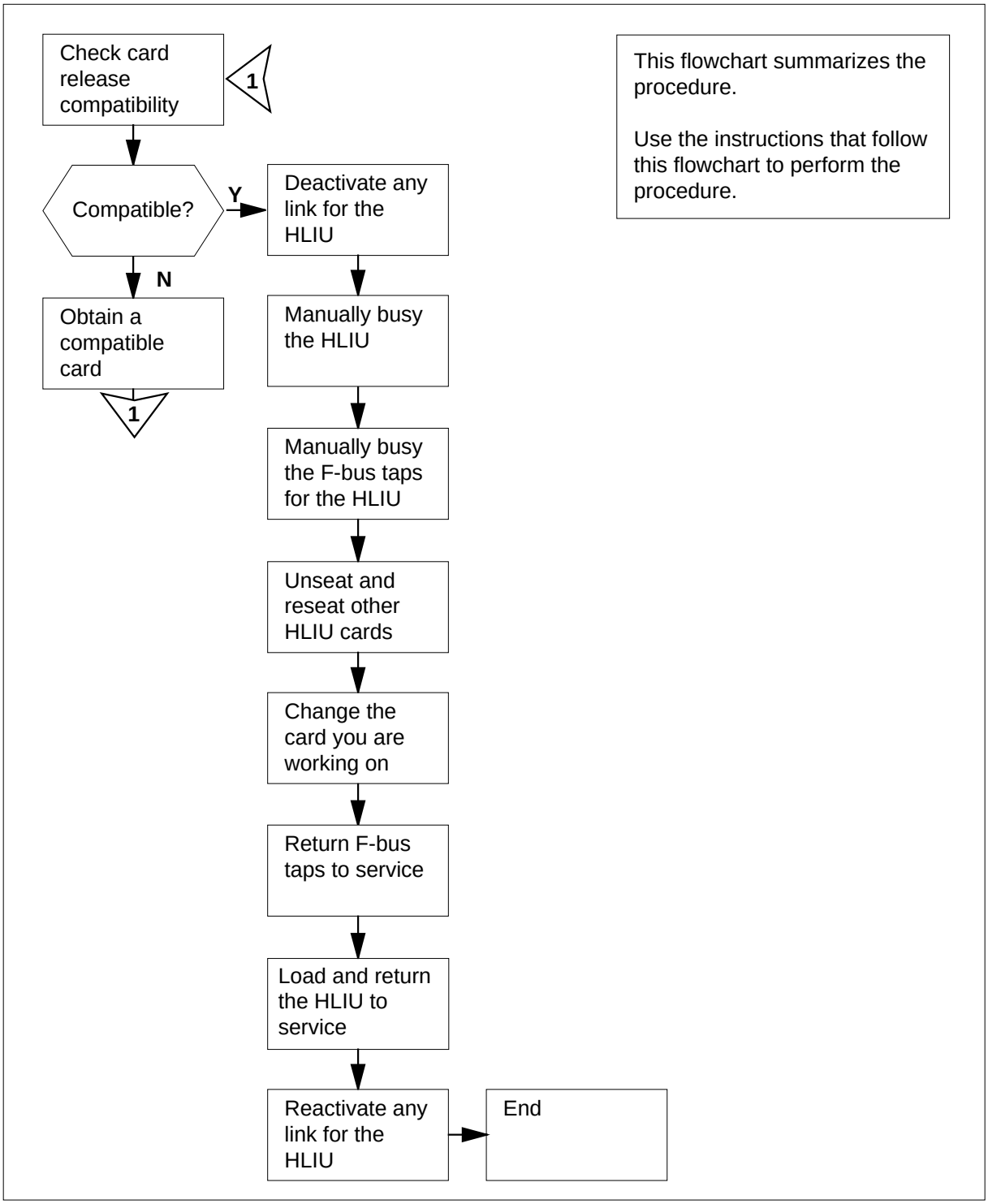

HLIU cards in an ELPP LIS (continued)

Replacing HLIU cards in an ELPP LIS

At your current location

1

> **CAUTION**
> **Loss of service**
> This procedure removes an HLIU from service and temporarily interrupts messaging on the associated CCS7 link. Perform this procedure only if necessary to return the HLIU to service. Otherwise, perform this procedure only during periods of low traffic.

Obtain a replacement card. Ensure that the replacement card has the same PEC, including suffix, as the card being removed.

At the MAP terminal

2 Ensure that the replacement card is compatible with the software load by typing

`>CHECKREL LIM pec release`

and pressing the Enter key.

where

pec
is the PEC and suffix of the new card

release
is the two-character code located on the faceplate of thereplacement card

Example input:

`>CHECKREL LIM NTEX22CA 2Z`

Example of a MAP response:

```
   PEC    BASELINE    EXCEPT    RELEASE     COMPATIBLE
NTEX22CA        01      None        2Z           YES
OK. Card release is above baseline.
```

If the replacement card is	Do
below baseline	step 3
on or above baseline	step 6

3 From the MAP display, record the baseline release code (BASELINE) and any exception release codes (EXCEPT).

HLIU cards in an ELPP LIS (continued)

4 Determine which release codes are compatible with the software load in the switch. A compatible release code is one that is

- greater than or equal to the baseline release code, and
- not an exception release code

Note: The range of release codes in ascending order is 01 to 09, 0A to 0Z, and 10 to VZ.

5 Obtain a replacement card with a compatible release code.

If you	Do
can obtain a compatible replacement card	step 2
cannot obtain a compatible replacement card	step 38

6 Access the PM level of the MAP display by typing

`>MAPCI;MTC;PM`

and pressing the Enter key.

Example of a MAP display:

```
            SysB    ManB    OffL    CBsy    ISTb    InSv
PM             1       0       2       0       3       6
```

7 Post the HLIU that contains the card to be replaced by typing

`>POST  HLIU  hliu_no`

and pressing the Enter key.

where

hliu_no
is the number of the HLIU (0 to 511)

Example of a MAP display:

```
            SysB    ManB    OffL    CBsy    ISTb    InSv
PM             1       0       2       0       3       6
HLIU           1       0       0       0       0       3
HLIU 208 InSv        Rsvd
```

8 Determine the state of the HLIU.

If the state of the HLIU is	Do
`SysB`, `SysB (NA)`, `ISTb`, or `InSv`	step 9
`ManB` or `ManB (NA)`	step 12
`OffL`	step 37

9 Deactivate the CCS7 link (if there is one) associated with the HLIU using the procedure *Deactivating CCS7 links* in this document. When you have completed the procedure, return to this point.

HLIU cards in an ELPP LIS (continued)

10 Manually busy the HLIU by typing

>BSY FORCE

and pressing the Enter key.

If	Do
you need to confirm the command	step 11
the command passed	step 12

11 Confirm the command by typing

>YES

and pressing the Enter key.

12 Display information about the HLIU by typing

>QUERYPM

and pressing the Enter key.

Example of a MAP response:

```
PM type: HLIU   PM No.: 208     Status: InSv
LIM: 2  Shelf: 2    Slot:10     LIU FTA:  4247 1000
Default Load: HCA04BD
Running Load: HCA04BD
LMS States:     ISTb        ISTb
Auditing:       Yes         Yes
Msg Channels:   Acc         Acc
TAP 8:           .           .
Reserved HLIU forms part of CCS7 Linkset:SSP208_LS SLC:0
LIU is not allocated
```

13 Record the number of the link interface module (LIM), link interface shelf (LIS), and the taps that are associated with the HLIU you are working on.

Note: The LIM number follows the word LIM on the second line of the display. In the example in step 12, the LIM number is 2. The LIS number follows the word shelf on the second line of the display. In the example in step 12, the LIS number is 2. The tap number follows the word TAP on the line below Msg Channels. In the example in step 12, the TAP number is 8.

14 Post the LIM by typing

>POST LIM lim_no

and pressing the Enter key.

where

lim_no
is the number of the LIM you recorded in step 13

Example of a MAP display:

HLIU cards in an ELPP LIS (continued)

```
                    SysB    ManB    OffL    CBsy    ISTb    InSv
       PM             1       0       2       0       3       6
       LIM            0       0       0       0       1       0

LIM 2 ISTb
                     OOS    OOS_Taps
                     Links  LIS1  LIS2  LIS3
Unit0: ISTb            .     .     .     .
Unit1: InSv            .     .     .     .
```

15 Access the LIS level of the MAP display by typing

>LIS lis_no

and pressing the Enter key.

where

lis_no
is the number of the LIS you recorded in step 13

Example of a MAP display:

```
                        LIS2      Tap: 0        4      8
      FBus0: InSv                        ....   ....   ....
      FBus1: ManB                        BBBB   BBBB   BBBB
```

16 Manually busy the HLIU tap on F-bus 0 by typing

>BSY FBUS 0 tap_no

and pressing the Enter key.

where

tap_no
is the number of the HLIU tap recorded in step 13

If	Do
you need to confirm the command	step 17
you do not need to confirm the command	step 18

17 Confirm the command by typing

>YES

and pressing the Enter key.

Example of a MAP response:

```
   Confirmed ...LIM 2 LIS 2 FBus 0 Tap 8 Busy initiated.
                LIM2 LIS 2 FBus 0 Tap 8 Busy passed.
```

18 Manually busy the HLIU tap on F-bus 1 by typing

>BSY FBUS 1 tap_no

and pressing the Enter key.

HLIU cards in an ELPP LIS (continued)

where

tap_no
is the number of the HLIU tap recorded in step 13

Example of a MAP response:

```
LIM 2 FBus 1 Tap 8 Busy requires confirmation because
a SEVERE system
OUTAGE may occur if the following node isisolated:
HLIU 208
Do you wish to proceed with this operation?
Please confirm ("YES", "Y", "NO", or "N"):
```

19 Confirm the command by typing

>YES

and pressing the Enter key.

Example of a MAP response:

```
Confirmed ...LIM 2 LIS 2 FBus 1 Tap 8 Busy initiated.
             LIM2 LIS 2 FBus 1 Tap 8 Busy
passed.
```

At the shelf

20

DANGER
Static electricity damage
Wear a wrist strap connected to the wrist-strap grounding point of a frame supervisory panel (FSP) or a modular supervisory panel (MSP) while handling circuit cards. This protects the cards against damage caused by static electricity.

Determine your next step based on the card you are replacing.

If you are replacing an	Do
NTEX76	step 21
NTEX22	step 23
NTEX78	step 26

21 To begin changing an NTEX76 card, unseat and reseat cards in the HLIU using the following sub-steps. To unseat a card, use the procedure *Unseating cards in equipment shelves* in this document. To reseat a card, use the procedure *Reseating cards in equipment shelves* in this document.a. Unseat the NTEX76 high-speed signaling terminal card.b. Unseat the NTEX22 link general processor card.c. Reseat the NTEX22 link general processor card.

HLIU cards in an ELPP LIS (continued)

22 Replace the NTEX76 card using the procedure *Replacing a card* in this document. When you have completed the procedure, return to this point.

Go to step 27.

23 To begin changing an NTEX22 card, unseat the NTEX76 high-speed signaling terminal card using the procedure *Unseating cards in equipment shelves* in this document. When you have finished the procedure, return to this point.

24 Replace the NTEX22 card using the procedure *Replacing a card* in this document. When you have completed the procedure, return to this point.

Note: If the card to be replaced has switches, ensure that the switches on the replacement card have the same settings.

25 Reseat the NTEX76 HLIU high-speed signaling terminal card using the procedure *Reseating cards in equipment shelves* in this document. When you have finished the procedure, return to this point.

Go to step 27.

26 Replace the card using the procedure *Replacing a card* in this document. When you have completed the procedure, return to this point.

27 The next action depends on your reason for performing this procedure.

If you were	Do
directed to this procedure from another maintenance procedure	step 28
not directed to this procedure from another maintenance procedure	step 29

28 Return to the maintenance procedure that sent you to this procedure and continue as directed.

At the MAP terminal

29 Return the HLIU tap on F-bus 0 to service by typing

```
>RTS  FBUS  0  tap_no
```

and pressing the Enter key.

where

tap_no
is the number of the HLIU tap you recorded in step 13

Example of a MAP response:

```
LIM 1 LIS 2 FBus 0 Tap 8 Return to Service initiated.
LIM 1 LIS 2 FBus 0 Tap 8 Return to Service  passed.
```

If the RTS command	Do
passed	step 30

HLIU cards in an ELPP LIS (continued)

If the RTS command	Do
failed	step 38

30 Return the HLIU tap on F-bus 1 to service by typing

>RTS FBUS 1 tap_no

and pressing the Enter key.

where

tap_no
is the number of the HLIU tap you recorded in step 13

Example of a MAP response:

```
LIM 1 LIS 2 FBus 1 Tap 8 Return to Service initiated.
LIM 1 LIS 2 FBus 1 Tap 8 Return to Service passed.
```

If the RTS command	Do
passed	step 31
failed	step 38

31 Quit from the F-bus level of the MAP display by typing

>QUIT

and pressing the Enter key.

32 Post the HLIU you are working on by typing

>POST HLIU hliu_no

and pressing the Enter key.

where

hliu_no
is the number of the HLIU (0 to 511)

33 Load the HLIU by typing

>LOADPM

and pressing the Enter key.

Example of a MAP response:

```
HLIU 208 LOADPM Passed
```

If the LOADPM command	Do
passed	step 35
failed	step 34

HLIU cards in an ELPP LIS (end)

34 Load the PM using the procedure *Loading a PM* in this document. When you have completed the procedure, return to this point.

35 Return the HLIU to service by typing

>RTS

and pressing the Enter key.

Example of a MAP response:

```
HLIU 100 RTS Passed
```

If the RTS command	Do
passed	step 36
failed	step 38

36 Activate the CCS7 link (if there is one) associated with the HLIU using the procedure *Activating CCS7 links* in this document. When you have completed the procedure, return to this point.

Go to step 39.

37 Consult office personnel to determine why the component is offline. Continue as directed by office personnel.

38 For further assistance, contact the personnel responsible for the next level of support.

39 You have completed this procedure.

HSLR cards in an ELPP LIS

Application

Use this procedure to replace the following cards in a high-speed link router (HSLR) in an enhanced link peripheral processor (ELPP) link interface shelf (LIS).

If you cannot identify the product engineering code (PEC), suffix, or provisioned shelf or frame for the card you want to replace, refer to the Index for a list of the cards, shelves, and frames documented in this card replacement NTP.

PEC	Suffix	Card name	Shelf or frame name
NTEX22	CA	Integrated processor and F-bus interface card	HSLR in an ELPP LIS

Common procedures

The following common procedures are referenced:

- *Activating CCS7 links*
- *Deactivating CCS7 links*
- *Loading a PM*
- *Replacing a card*

Action

The following flowchart is only a summary of the procedure. To replace the card, use the instructions in the step-action procedure that follows the flowchart.

HSLR cards in an ELPP LIS (continued)

Summary of Replacing HSLR cards in an ELPP LIS

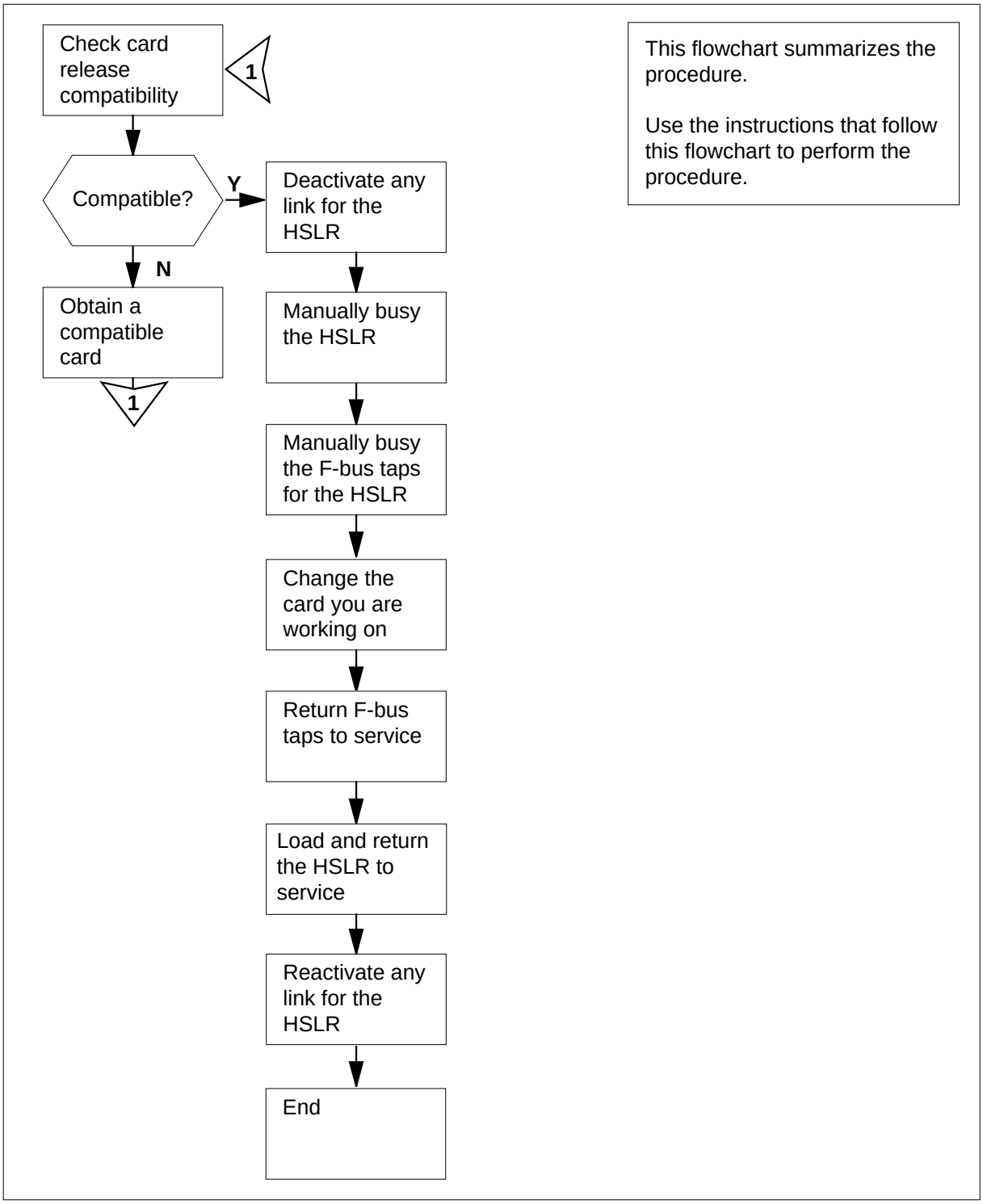

Replacing HSLR cards in an ELPP LIS

At your current location

1

> **CAUTION**
> **Loss of service**
> This procedure removes an HSLR from service and temporarily interrupts messaging on the associated CCS7 link. Perform this procedure only if necessary to return the HSLR to service. Otherwise, perform this procedure only during periods of low traffic.

Obtain a replacement card. Ensure that the replacement card has the same PEC, including suffix, as the card being removed.

At the MAP terminal

2 Ensure that the replacement card is compatible with the software load by typing

`>CHECKREL LIM pec release`

and pressing the Enter key.

where

pec
is the PEC and suffix of the new card

release
is the two-character code located on the faceplate of thereplacement card

Example input:

`>CHECKREL LIM NTEX22CA 2Z`

Example of a MAP response:

```
   PEC    BASELINE    EXCEPT    RELEASE     COMPATIBLE
NTEX22CA        01      None        2Z           YES
OK. Card release is above baseline.
```

If the replacement card is	Do
below baseline	step 3
on or above baseline	step 6

3 From the MAP display, record the baseline release code (BASELINE) and any exception release codes (EXCEPT).

HSLR cards in an ELPP LIS (continued)

4 Determine which release codes are compatible with the software load in the switch. A compatible release code is one that is

- greater than or equal to the baseline release code, and
- not an exception release code

Note: The range of release codes in ascending order is 01 to 09, 0A to 0Z, and 10 to VZ.

5 Obtain a replacement card with a compatible release code.

If you	Do
can obtain a compatible replacement card	step 2
cannot obtain a compatible replacement card	step 32

6 Access the PM level of the MAP display by typing

`>MAPCI;MTC;PM`

and pressing the Enter key.

Example of a MAP display:

```
          SysB    ManB    OffL    CBsy    ISTb    InSv
PM          1       0       2       0       3       6
```

7 Post the HSLR that contains the card to be replaced by typing

`>POST  HSLR  hslr_no`

and pressing the Enter key.

where

hslr_no
is the number of the HSLR (0 to 511)

Example of a MAP display:

```
            SysB    ManB    OffL    CBsy    ISTb    InSv
PM             1       0       2       0       3       6
HSLR           1       0       0       0       0       3

HSLR   208 InSv       Rsvd
```

8 Determine the state of the HSLR.

If the state of the HSLR is	Do
`SysB`, `SysB (NA)`, `ISTb`, or `InSv`	step 9
`ManB` or `ManB (NA)`	step 12
`OffL`	step 31

HSLR cards in an ELPP LIS (continued)

9 Deactivate the CCS7 link (if there is one) associated with the HSLR using the procedure *Deactivating CCS7 links* in this document. When you have completed the procedure, return to this point.

10 Manually busy the HSLR by typing

>BSY FORCE

and pressing the Enter key.

If	Do
you need to confirm the command	step 11
the command passed	step 12

11 Confirm the command by typing

>YES

and pressing the Enter key.

12 Display information about the HSLR by typing

>QUERYPM

and pressing the Enter key.

Example of a MAP response:

```
PM type: HSLR   PM No.: 208     Status: InSv
LIM: 2  Shelf: 2    Slot:10     LIU FTA:  4247 1000
Default Load: HCA04BD
Running Load: HCA04BD
LMS States:     ISTb        ISTb
Auditing:       Yes         Yes
Msg Channels:   Acc         Acc
TAP 8:           .           .
Reserved HSLR forms part of CCS7 Linkset:SSP208_LS SLC:0
LIU is not allocated
```

13 Record the number of the link interface module (LIM), link interface shelf (LIS), and the taps that are associated with the HSLR you are working on.

Note: The LIM number follows the word LIM on the second line of the display. In the example in step 12, the LIM number is 2. The LIS number follows the word Shelf on the second line of the display. In the example in step 12, the LIS number is 2. The tap number follows the word TAP on the line below Msg Channels. In the example in step 12, the TAP number is 8.

14 Post the LIM by typing

>POST LIM lim_no

and pressing the Enter key.

where

lim_no
is the number of the LIM you recorded in step 13

HSLR cards in an ELPP LIS (continued)

Example of a MAP display:

```
            SysB    ManB    OffL    CBsy    ISTb    InSv
      PM       1       0       2       0       3       6
      LIM      0       0       0       0       1       0

 LIM 2 ISTb
                    OOS    OOS_Taps
                    Links  LIS1  LIS2  LIS3
 Unit0: ISTb         .       .     .      .
 Unit1: InSv        .       .     .      .
```

15 Access the LIS level of the MAP display by typing

>LIS lis_no

and pressing the Enter key.

where

lis_no
is the number of the LIS you recorded in step 13

Example of a MAP display:

```
             LIS2        Tap: 0      4      8
  FBus0: InSv                ....   ....   ....
  FBus1: ManB                BBBB   BBBB   BBBB
```

16 Manually busy the HSLR tap on F-bus 0 by typing

>BSY FBUS 0 tap_no

and pressing the Enter key.

where

tap_no
is the number of the HSLR tap recorded in step 13

If	Do
you need to confirm the command	step 17
you do not need to confirm the command	step 18

17 Confirm the command by typing

>YES

and pressing the Enter key.

Example of a MAP response:

```
 Confirmed ...LIM 2 LIS 2 FBus 0 Tap 8 Busy initiated.
              LIM2 LIS 2 FBus 0 Tap 8 Busy passed.
```

18 Manually busy the HSLR tap on F-bus 1 by typing

>BSY FBUS 1 tap_no

HSLR cards in an ELPP LIS (continued)

and pressing the Enter key.

where

tap_no
is the number of the HSLR tap recorded in step 13

Example of a MAP response:

```
LIM 2 FBus 1 Tap 8 Busy requires confirmation because
a SEVERE system OUTAGE may occur if the following
node is isolated:
HSLR 208
Do you wish to proceed with this operation?
Please confirm ("YES", "Y", "NO", or "N"):
```

19 Confirm the command by typing

>YES

and pressing the Enter key.

Example of a MAP response:

```
Confirmed ...LIM 2 LIS 2 FBus 1 Tap 8 Busy initiated.
             LIM2 LIS 2 FBus 1 Tap 8 Busy passed.
```

At the shelf

20

DANGER
Static electricity damage
Wear a wrist strap connected to the wrist-strap grounding point of a frame supervisory panel (FSP) or a modular supervisory panel (MSP) while handling circuit cards. This protects the cards against damage caused by static electricity.

Replace the NTEX22 card using the procedure *Replacing a card* in this document. When you have completed the procedure, return to this point.

Note: If the card to be replaced has switches, ensure that the switches on the replacement card have the same settings.

21 The next action depends on your reason for performing this procedure.

If you were	Do
directed to this procedure from another maintenance procedure	step 22
not directed to this procedure from another maintenance procedure	step 23

HSLR cards in an ELPP LIS (continued)

22 Return to the maintenance procedure that sent you to this procedure and continue as directed.

At the MAP terminal

23 Return the HSLR tap on F-bus 0 to service by typing

`>RTS FBUS 0 tap_no`

and pressing the Enter key.

where

tap_no
is the number of the HSLR tap you recorded in step 13

Example of a MAP response:

```
LIM 1 LIS 2 FBus 0 Tap 8 Return to Service initiated.
LIM 1 LIS 2 FBus 0 Tap 8 Return to Service passed.
```

If the RTS command	Do
passed	step 24
failed	step 32

24 Return the HSLR tap on F-bus 1 to service by typing

`>RTS FBUS 1 tap_no`

and pressing the Enter key.

where

tap_no
is the number of the HSLR tap you recorded in step 13

Example of a MAP response:

```
LIM 1 LIS 2 FBus 1 Tap 8 Return to Service initiated.
LIM 1 LIS 2 FBus 1 Tap 8 Return to Service passed.
```

If the RTS command	Do
passed	step 25
failed	step 32

25 Quit from the F-bus level of the MAP display by typing

`>QUIT`

and pressing the Enter key.

26 Post the HSLR you are working on by typing

`>POST HSLR hslr_no`

and pressing the Enter key.

HSLR cards in an ELPP LIS (end)

where

hslr_no
is the number of the HSLR (0 to 511)

27 Load the HSLR by typing

>LOADPM

and pressing the Enter key.

Example of a MAP response:

```
HSLR 208 LOADPM Passed
```

If the LOADPM command	Do
passed	step 29
failed	step 28

28 Load the PM using the procedure *Loading a PM* in this document. When you have completed the procedure, return to this point.

29 Return the HSLR to service by typing

>RTS

and pressing the Enter key.

Example of a MAP response:

```
HSLR 100 RTS Passed
```

If the RTS command	Do
passed	step 30
failed	step 32

30 Activate the CCS7 link (if there is one) associated with the HSLR using the procedure *Activating CCS7 links* in this document. When you have completed the procedure, return to this point.

Go to step 33.

31 Consult office personnel to determine why the component is offline. Continue as directed by office personnel.

32 For further assistance, contact the personnel responsible for the next level of support.

33 You have completed this procedure.

NT9X13 in an ELPP LIM unit

Application

Use this procedure to replace an NT9X13 in a link interface module (LIM) unit of an enhanced link peripheral processor (ELPP).

If you cannot identify the product engineering code (PEC), suffix, or provisioned shelf or frame for the card you want to replace, refer to the Index for a list of the cards, shelves, and frames documented in this card replacement book.

PEC	Suffixes	Card name	Shelf/frame name
NT9X13	DE	CPU 20-MHz card	LIM unit of an ELPP

Note 1: A link interface module (LIM) unit is also referred to as a local message switch (LMS) in some documentation. LIM unit 0 corresponds to LMS 0; LIM unit 1 corresponds to LMS 1. In MAP commands, responses, and displays, the term LIM unit is used to designate an LMS.

Note 2: The ELPP is referred to as a link interface module (LIM) where the entire ELPP is indicated, paralleling how the LISs in the ELPP are closely associated with the LIM. MAP displays and data schema tables also refer to the ELPP as a LIM.

Common procedures

The following common procedures are referenced:

- *Loading a PM*
- *Replacing a card*
- *Unseating cards in equipment shelves*

Do not go to the common procedure unless directed to do so in the step-action procedure.

Action

The following flowchart is only a summary of the procedure. To replace the card, use the instructions in the step-action procedure that follows the flowchart.

NT9X13
in an ELPP LIM unit (continued)

Summary of Replacing an NT9X13 in an ELPP LIM unit

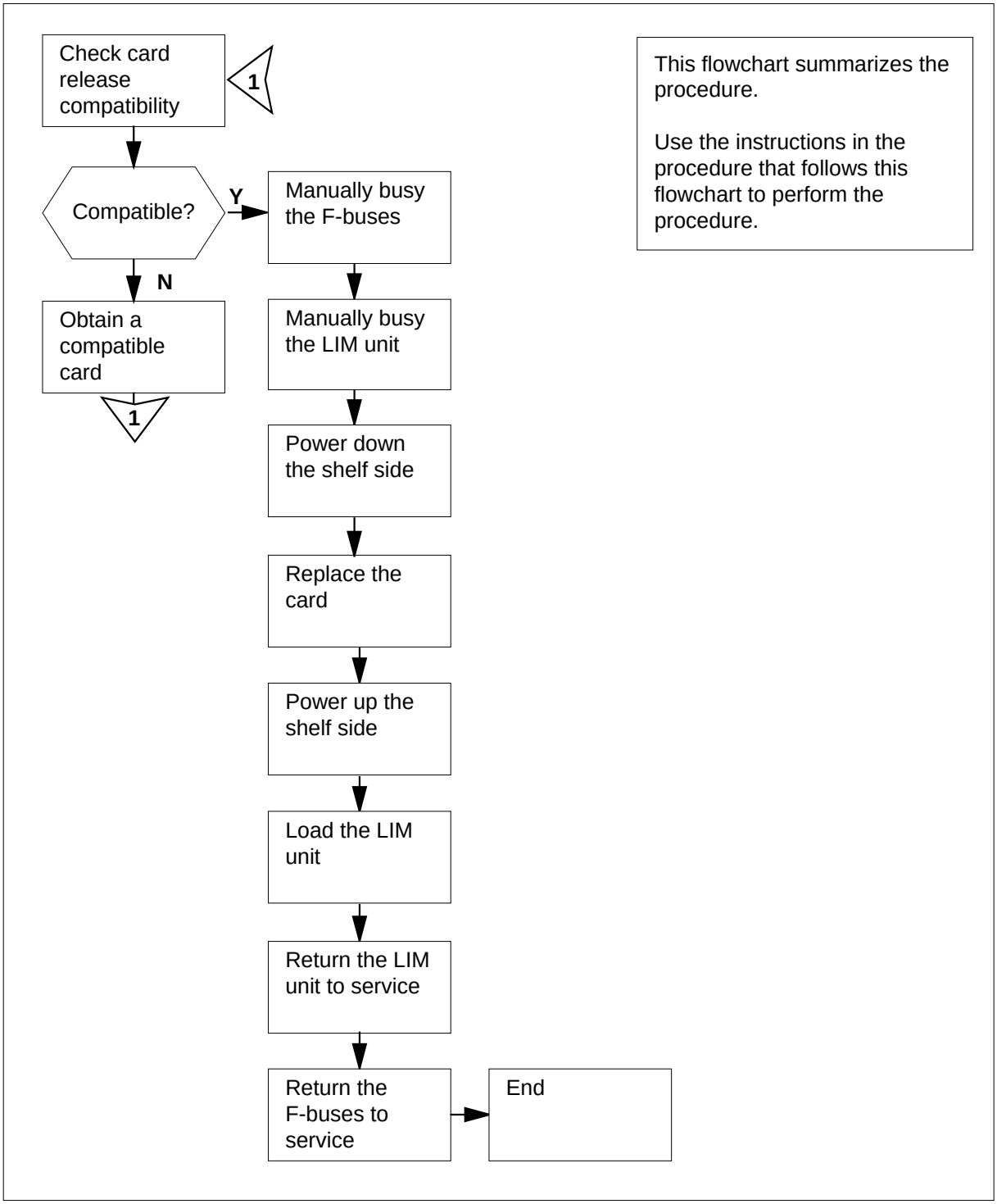

NT9X13
in an ELPP LIM unit (continued)

Replacing NT9X13 in an ELPP LIM unit

At your current location

1

> **CAUTION**
> **Loss of service**
> This procedure provides instructions to remove a LIM unit from service, thereby removing redundancy from the ELPP. Perform this procedure only if necessary to return the LIM unit to service. Otherwise, perform this procedure only during periods of low traffic.

Obtain a replacement card. Ensure that the replacement card has the same PEC, including suffix, as the card being removed.

At the MAP terminal

2 Ensure that the replacement card is compatible with the software load by typing

```
>CHECKREL  LIM  pec  release
```

and pressing the Enter key.

where

pec
is the PEC and suffix of the new card

release
is the two-character code located on the faceplate of thereplacement card

Example input:

```
>CHECKREL  LIM  NT9X13DE  2Z
```

Example of a MAP response:

```
    PEC    BASELINE    EXCEPT    RELEASE     COMPATIBLE
 NT9X13DE        01      None        2Z           Yes
 OK. Card release is above baseline.
```

If the replacement card is	Do
below baseline	step 3
on or above baseline	step 6

NT9X13
in an ELPP LIM unit (continued)

3 From the MAP display, record the baseline release code (BASELINE) and any exception release codes (EXCEPT).

4 Determine which release codes are compatible with the software load in the switch. A compatible release code is one that is

- greater than or equal to the baseline release code, and
- not an exception release code

Note: The range of release codes in ascending order is 01 to 09, 0A to 0Z, and 10 to VZ.

5 Obtain a replacement card with a compatible release code.

If you	Do
can obtain a compatible replacement card	step 2
cannot obtain a compatible replacement card	step 31

6 Access the PM level of the MAP display by typing

>MAPCI;MTC;PM

and pressing the Enter key.

Example of a MAP display:

```
             SysB   ManB    OffL    CBsy    ISTb   InSv
PM            0      0      28       0       0      18
```

7 Post the LIM that contains the card to be replaced by typing

>POST LIM lim_no

and pressing the Enter key.

where

lim_no
is the number of the LIM to be posted (0 to 16)

Example of a MAP display:

```
            SysB    ManB    OffL    CBsy    ISTb    InSv
       PM     0       0      28       0       0      18
       LIM    0       0       1       0       0       1

LIM 0 InSv
                  OOS   OOS_Taps
                   Links  LIS1  LIS2  LIS3
Unit0: InSv          .      .     .     .
Unit1: InSv          .      .     .     .
```

NT9X13
in an ELPP LIM unit (continued)

8 Determine the state of the LIM.

Note: The state of the LIM is shown to the right of the LIM number on the MAP display.

If the state of the LIM is	Do
`Offl`	step 30
any other in-service or out-of-service state	step 9

9 Determine the state of the LIM units. Refer to the table at the end of this document to identify the LIM unit, the F-bus, and the mates associated with the card you are replacing.

Note: The state of the LIM units is shown to the right of the LIM unit number on the MAP display.

If the state of the mate LIM unit is	Do
`InSv`	step 10
`ISTb`, and the state of the LIM unit associated with the card you are replacing is `InSv` or `ISTb`	step 10
`ISTb`, and the LIM unit associated with the card you are replacing is out of service	step 10
any out-of-service state, and the state of the LIM unit associated with the card you are replacing is `InSv` or `ISTb`	step 28
any out-of-service state, and the LIM unit associated with the card you are replacing is out of service	step 10

Note: Steps 10 through 13 must be repeated for each LIS on the LIM unit.

10 Access the LIS level of the MAP display by typing

`>LIS lis_no`

and pressing the Enter key.

where

lis_no
is the number of the LIS (1, 2, or 3)

Example of a MAP display:

NT9X13
in an ELPP LIM unit (continued)

```
                SysB    ManB    OffL    CBsy    ISTb    InSv
   PM              0       0      28       0       0      18
   LIM             0       0       1       0       0       1

LIM  0 InSv
                  OOS   OOS_Taps
                   Links  LIS1  LIS2  LIS3
Unit0: InSv          .      .     .     .
Unit1: InSv          .      .     .     .


       LIS2        Tap:  0     4     8
FBus0: InSv              ....  ....  ....
FBus1: InSv              ....  ....  ....
```

11

> **CAUTION**
> **Potential loss of service**
> Ensure that the mate LIM unit, the mate F-bus, and the F-bus taps on the mate are in service before manually busying the LIM unit and F-bus associated with the card to be replaced. Manually busying the F-bus and the LIM unit will isolate nodes on the link interface shelves (LIS) if the mates are out of service.

Determine the states of the F-bus and the F-bus taps for the mate LIM unit.

Note: The state of the F-buses is shown to the right of the F-bus numbers on the MAP display. Refer to the table at the end of this document to identify the LIM unit associated with the card you are replacing.

If the states of the mate resources are	Do
in-service (state of the F-bus is `InSv` and all F-bus taps are `.` [dot])	step 10 for the next LIS OR step 12 (if steps 10 and 11 have been repeated for each LIS)
any other state (state of the F-bus is not `InSv` and one or more F-bus taps are not `.` [dot])	step 29

12 Manually busy the F-bus associated with the card to be replaced by typing

>BSY FBUS fbus_no

NT9X13
in an ELPP LIM unit (continued)

and pressing the Enter key.

where

fbus_no
is the number of the F-bus (0 or 1)

Note: Refer to the table at the end of this document to identify the LIM unit associated with the card you are replacing.

Example of a MAP display:

```
            SysB    ManB    OffL    CBsy    ISTb    InSv
 PM            0       0      28       0       0      18
 LIM           0       0       1       0       1       0

 LIM  0 ISTb

                  OOS   OOS_Taps
                   Links   LIS1  LIS2  LIS3
Unit0: ISTb          .      .     12    .
Unit1: InSv          .      .     .     .

       LIS2        Tap:  0     4     8
FBus0: ManB             BBBB  BBBB  BBBB
FBus1: InSv             ....  ....  ....
```

If	Do
the command passes	step 12 for the next LIS OR step 14 (if step 12 has been repeated for each LIS)
you must confirm the command	step 13

13 Confirm the command by typing

>YES

and pressing the Enter key.

Example of a MAP response:

```
LIM 0 LIS 2 FBus 0 Busy initiated.
LIM 0 LIS 2 FBus 0 Busy passed.
```

If	Do
step 12 has been repeated for each LIS	step 14

NT9X13
in an ELPP LIM unit (continued)

If	Do
step 12 has not been repeated for each LIS	step 12 for the next LIS

14 Quit the LIS level of the MAP display by typing

>QUIT

and pressing the Enter key.

15 Manually busy the LIM unit corresponding to the card to be replaced by typing

>BSY UNIT unit_no

and pressing the Enter key.

where

unit_no
is the number of the LIM unit (0 or 1)

Example of a MAP display:

```
            SysB    ManB    OffL    CBsy    ISTb    InSv
PM             0       0      28       0      17      13
LIM            0       0       1       0       1       0

LIM  0 ISTb

 OOSOOS_Taps
                        Links  LIS1  LIS2  LIS3
Unit0:  ManB                2   .     12   .
Unit1:  ISTb                2   .     .    .

         LIS2             Tap:   0    4    8
FBus 0:  ManB                  BBBB BBBB BBBB
FBus 1:  InSv                  .... .... ....
```

At the shelf

16

WARNING
Static electricity damage
Wear a wrist strap connected to the wrist-strap grounding point of a frame supervisory panel (FSP) or a modular supervisory panel (MSP) while handling circuit cards. This protects the cards against damage caused by static electricity.

Press down and release the power switch on the faceplate of the NT9X30 power converter (slot 04F) associated with the card to be replaced. Refer to

NT9X13
in an ELPP LIM unit (continued)

the table at the end of this document to identify the power converter associated with the LIM unit you are working on.

Note: The CONVERTER OFF LED is lit when the NT9X30 power converter is powered down.

If the CONVERTER OFF LED is	Do
lit	step 19
not lit	step 17

17

> **CAUTION**
> **Possible loss of service**
> Unseating the NT9X13 card bypasses the safety interlock. Ensure that the card to be removed is in the manual-busy LIM unit.

Unseat the NT9X13 associated with the LIM unit you are working on using the procedure *Unseating cards in equipment shelves* in this document. When you have completed the procedure, return to this point.

18 Press down and release the power switch on the faceplate of the NT9X30 power converter (slot 36F) associated with the card to be replaced. Refer to the table at the end of this document to identify the power converter associated with the LIM unit you are working on.

19 Replace the card using the procedure *Replacing a card* in this document. When you have completed the procedure, return to this point.

20 Release the power switch on the faceplate of the NT9X30 power converter associated with the card you have replaced.

Note: The CONVERTER OFF LED is not lit when the NT9X30 power converter is powered up.

21 The next action depends on your reason for performing this procedure.

If you were	Do
sent to this procedure from another maintenance procedure	step 22
not sent to this procedure from another maintenance procedure	step 23

22 Return to the maintenance procedure that sent you to this procedure and continue as directed.

NT9X13
in an ELPP LIM unit (continued)

At the MAP terminal

23 Load the LIM unit by typing

>LOADPM UNIT unit_no

and pressing the Enter key.

where

unit_no
is the number of the LIM unit (0 or 1)

Example of a MAP response:

```
LIM 0 UNIT 0 Load initiated.
LIM 0 UNIT 0 Load passed.
```

If the LOADPM command	Do
passed	step 25
failed	step 24

24 Load the PM using the procedure *Loading a PM* in this document. When you have completed the procedure, return to this point.

25 Return the LIM unit to service by typing

>RTS UNIT unit_no

and pressing the Enter key.

where

unit_no
is the number of the LIM unit (0 or 1)

Example of a MAP response:

```
LIM 0 UNIT 0 Return to Service initiated.
LIM 0 UNIT 0Return to Service passed.
```

If the RTS command	Do
passed	step 26
failed	step 31

Note: Steps 26 and 27 must be repeated for each LIS on the LIM unit.

26 Access the LIS level of the MAP display by typing

>LIS lis_no

and pressing the Enter key.

where

NT9X13
in an ELPP LIM unit (continued)

lis_no
is the number of the LIS (0, 1, or 2)

Example of a MAP display:

```
        SysB    ManB    OffL    CBsy    ISTb    InSv
   PM      0       0      28       0       0      18
   LIM     0       0       1       0       0       1

LIM 0 ISTb
                    OOS   OOS_Taps
                     Links LIS1  LIS2  LIS3
Unit0: ISTb           .      .     .     .
Unit1: InSv           .      .     .     .

       LIS2         Tap:
                          0     4     8
FBus0: ManB              BBBB  BBBB  BBBB
FBus1: InSv              ....  ....  ....
```

27 Return the F-bus to service by typing

>RTS FBUS fbus_no

and pressing the Enter key.

where

fbus_no
is the number of the F-bus that you busied (0 or 1)

Example of a MAP response:

```
LIM 0 FBus 0 Return to Service initiated.
LIM 0 FBus 0Return to Service passed.
```

If the RTS command	Do
passed	step 26 for the next LIS OR step 32 (if step 26 has been repeated for each LIS)
failed	step 31

28 Continuing with this procedure will remove both LIM units from service, thereby isolating application specific units (ASU) on the link interface shelves (LIS). Consult office personnel or your next level of support to determine if you should continue with this procedure, and proceed as directed.

29 Continuing with this procedure may isolate one or more application specific units (ASU) on the link interface shelves (LIS). Consult office personnel or your next level of support to determine if you should continue with this procedure, and proceed as directed.

30 Consult office personnel to determine why the component is offline. Continue as directed by office personnel.

NT9X13
in an ELPP LIM unit (end)

31 For further assistance, contact the personnel responsible for the next level of support.

32 You have completed this procedure.

NT9X13 card and associated LIM components

PEC	Slot	Associated LIM hardware and F-buses	
NT9X13	17F	LIM unit number: Mate LIM unit number: F-bus number: Mate F-bus number: Location of NT9X30 (+5 V) power converter:	0 1 0 1 slot 04F
NT9X13	22F	LIM unit number: Mate LIM unit number: F-bus number: Mate F-bus number: Location of NT9X30 (+5 V) power converter:	1 0 1 0 slot 36F

Note: A LIM unit is also referred to as an LMS. LIM unit 0 corresponds to LMS 0; LIM unit 1 corresponds to LMS 1. In MAP commands, responses, and displays, the term LIM unit is used to mean an LMS. The term LIM is also used to refer to the ELPP if the entire ELPP cabinet is meant.

System and power cards in an ELPP LIM unit

Application

Use this procedure to replace the following cards in a link interface module (LIM) unit of an enhanced link peripheral processor (ELPP).

If you cannot identify the product engineering code (PEC), suffix, or provisioned shelf or frame for the card you want to replace, refer to the Index for a list of the cards, shelves, and frames documented in this card replacement book.

System and power cards in an ELPP LIM unit

PEC	Suffix	Card name	Shelf or frame name
NT9X15	AA	Mapper card	LIM unit of an ELPP
NT9X17	AD	Message switch four-port card	LIM unit of an ELPP
NT9X26	AA, BA, CA	Remote terminal interface paddle board	LIM unit of an ELPP
NT9X30	AA	+5V 86-A power converter card	LIM unit of an ELPP
NT9X30	AC	Global +5V 86-A power converter card	LIM unit of an ELPP
NT9X31	AB	-5V power converter card	LIM unit of an ELPP
NT9X49	CA	Message switch P-bus terminator card	LIM unit of an ELPP
NT9X52	AA	Message switch T-bus access card	LIM unit of an ELPP
NT9X53	AD	Message switch system clock card	LIM unit of an ELPP
NT9X62	BB	Four-port sub-rate DS512 paddleboard	LIM unit of an ELPP
NT9X73	BB	LMS F-bus rate adapter card	LIM unit of an ELPP
NT9X79	BB	F-bus termination paddle board	LIM unit of an ELPP

System and power cards in an ELPP LIM unit (continued)

Note 1: A link interface module (LIM) is also referred to as an LMS. LIM unit 0 corresponds to LMS 0; LIM unit 1 corresponds to LMS 1. In MAP commands, responses, and displays, the term LIM is used to mean an LMS.

Note 2: The ELPP is referred to as a LIM when the entire ELPP is meant, paralleling how the LISs in the ELPP are closely associated with the LIM. MAP displays and data schema tables also refer to the ELPP as a LIM.

Common procedures

The following common procedures are referenced:

- *Loading a PM*
- *Manually busying LIM-to-MS SR128 links*
- *Replacing a card*
- *Reseating cards in equipment shelves*
- *Returning LIM-to-MS SR128 links to service*
- *Unseating cards in equipment shelves*

Do not go to the common procedure unless directed to do so in the step-action procedure.

Action

The following flowchart is only a summary of the procedure. To replace the card, use the instructions in the step-action procedure that follows the flowchart.

System and power cards in an ELPP LIM unit (continued)

Summary of Replacing System and power cards in an ELPP LIM unit

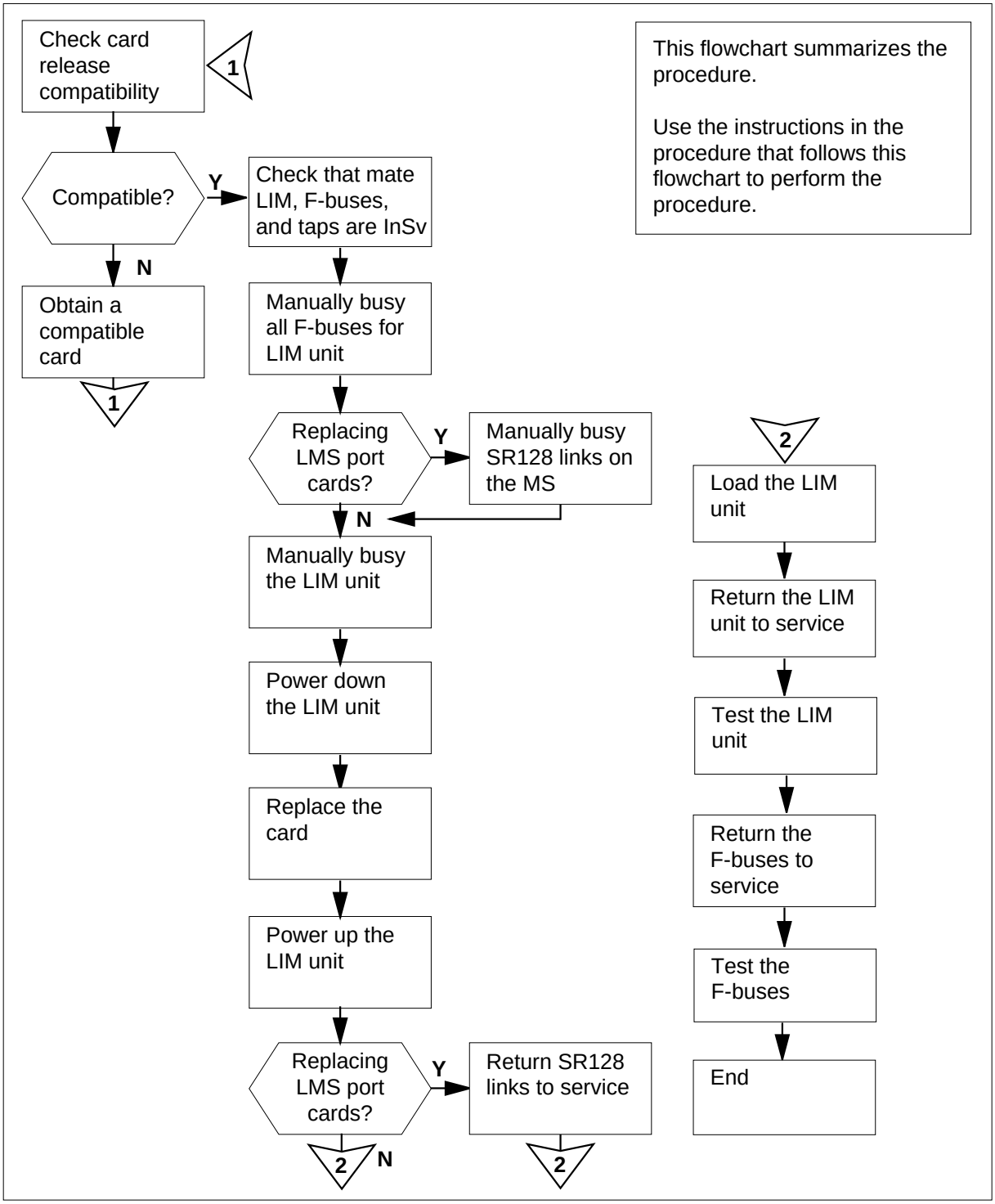

System and power cards in an ELPP LIM unit (continued)

Replacing System and power cards in an ELPP LIM unit

At your current location

1

> **CAUTION**
> **Loss of service**
> This procedure provides instructions for removing a LIM unit from service, thereby removing redundancy from the ELPP. Perform this procedure only if necessary to return the LIM unit to service. Otherwise, perform this procedure only during periods of low traffic.

Obtain a replacement card. Ensure that the replacement card has the same PEC, including suffix, as the card being removed.

At the MAP terminal

2 Ensure that the replacement card is compatible with the software load by typing

```
>CHECKREL  LIM  pec  release
```

and pressing the Enter key.

where

pec
is the PEC and suffix of the new card

release
is the two-character code located on the faceplate of thereplacement card

Example input:

```
>CHECKREL  LIM  NT9X15AA  2Z
```

Example of a MAP response:

```
   PEC    BASELINE    EXCEPT    RELEASE     COMPATIBLE
NT9X15AA        40      None        2Z           *NO
Card release is below baseline.
Do not plug the card into the LIM.
```

If the replacement card is	Do
below baseline	step 3
on or above baseline	step 6

System and power cards in an ELPP LIM unit (continued)

3 From the MAP display, record the baseline release code (BASELINE) and any exception release codes (EXCEPT).

4 Determine which release codes are compatible with the software load in the switch. A compatible release code is one that is

- greater than or equal to the baseline release code, and
- not an exception release code

Note: The range of release codes in ascending order is 01 to 09, 0A to 0Z, and 10 to VZ.

5 Obtain a replacement card with a compatible release code.

If you	Do
can obtain a compatible replacement card	step 2
cannot obtain a compatible replacement card	step 40

6 Access the PM level of the MAP display by typing

>MAPCI;MTC;PM

and pressing the Enter key.

Example of a MAP display:

```
                SysB    ManB    OffL    CBsy    ISTb    InSv
PM               0       0      28       0       0      18
```

7 Post the LIM unit that contains the card to be replaced by typing

>POST LIM lim_no

and pressing the Enter key.

where

lim_no
is the number of the LIM to be posted (0 to 16)

Example of a MAP display:

```
            SysB    ManB    OffL    CBsy    ISTb    InSv
      PM     0       0      28       0       0      18
      LIM    0       0       1       0       0       1

 LIM 0 InSv
                            OOS   OOS_Taps
 Links                       LIS1  LIS2  LIS3
 Unit0: InSv          .      .     .     .
 Unit1: InSv          .      .     .     .
```

System and power cards in an ELPP LIM unit (continued)

8 Determine the state of the LIM.

Note: The state of the LIM is shown to the right of the LIM number on the MAP display.

If the state of the LIM is	Do
`Offl`	step 39
any other in-service or out-of-service state	step 9

9 Determine the state of the mate LIM unit. Refer to the table at the end of this document to identify the LIM unit associated with the card you are replacing.

Note: The state of the LIM units is shown to the right of the LIM unit number on the MAP display.

If the state of the mate LIM unit is	Do
`InSv`	step 10
`ISTb`, and the state of the LIM unit associated with the card you are replacing is `InSv` or `ISTb`	step 10
`ISTb`, and the LIM unit associated with the card you are replacing is out of service	step 10
any out-of-service state, and the state of the LIM unit associated with the card you are replacing is `InSv` or `ISTb`	step 37
any out-of-service state, and the LIM unit associated with the card you are replacing is out of service	step 10

Note: Steps 10 and 11 must be repeated for each LIS on the LIM unit.

10 Access the LIS level of the MAP display by typing

`>LIS lis_no`

and pressing the Enter key.

where

lis_no
is the number of the LIS (1, 2, or 3)

Example of a MAP display:

System and power cards in an ELPP LIM unit (continued)

```
          SysB    ManB    OffL    CBsy    ISTb    InSv
    PM       0       0      28       0       0      18
    LIM      0       0       1       0       0       1


LIM 0 InSv

                  OOS   OOS_Taps
                   Links  LIS1  LIS2  LIS3
Unit0: InSv          .      .     .     .
Unit1: InSv          .      .     .     .

       LIS2        Tap:  0     4     8
FBus0: InSv             ....  ....  ....
FBus1: InSv             ....  ....  ....
```

11

CAUTION
Potential loss of service
Ensure that the mate LIM unit, the mate F-buses, and the F-bus taps on the mate are in service before manually busying the LIM unit and F-buses associated with the card to be replaced. Manually busying the F-buses and the LIM unit isolates nodes on the link interface shelves (LIS) if the mate resources are out of service.

Determine the states of the F-bus and the provisioned F-bus taps for the mate LIM unit.

Note: The state of the F-buses is shown to the right of the F-bus numbers on the MAP display. Refer to the table at the end of this document to identify the LIM and F-bus components associated with the card you are replacing.

If the states are	Do
in-service (state of the F-bus is `InSv` and all F-bus taps are `.` [dot])	step 10 for the next LIS OR step 12 (if steps 10 and 11 have been repeated for each LIS)
any other state (state of the F-bus is not `InSv` and one or more F-bus taps are not `.` [dot])	step 38

Note: Step 12 must be repeated for each LIS on the LIM unit.

System and power cards in an ELPP LIM unit (continued)

12 Manually busy the F-bus on the LIS corresponding to the LIM that is associated with the card to be replaced, by typing

>BSY FBUS fbus_no

and pressing the Enter key.

where

fbus_no
is the number of the F-bus (0 or 1)

Note: Refer to the table at the end of this document to identify the F-bus components corresponding to the LIM associated with the card you are replacing.

Example of a MAP response:

```
LIM 0 LIS 2 FBus 0 Busy requires confirmation
Please confirm ("YES", "Y", "NO", or "N"):
```

If	Do
the command passes	step 12 for the next LIS OR- step 14 (if step 12 has been repeated for each LIS)
you must confirm the command	step 13

13 Confirm the command by typing

>YES

and pressing the Enter key.

Example of a MAP response:

```
LIM 0 LIS 1 FBus 0 Busy initiated.
LIM 0 LIS 1 FBus 0 Busy passed.
```

If	Do
step 12 has been repeated for each LIS	step 14
step 12 has NOT been repeated for each LIS	step 12 for the next LIS

14 Quit the LIS level of the MAP display by typing

>QUIT

and pressing the Enter key.

System and power cards in an ELPP LIM unit (continued)

15 The next step depends on the card you are replacing

If you are replacing	Do
an NT9X17 or an NT9X62 (MS port cards)	step 16
any other card	step 17

16

> **CAUTION**
> **Possible service impact**
> Manually busy only the SR128 links associated with a specific NT9X17 or NT9X62 card in the LIM unit. The remaining SR128 links associated with the LIM unit must remain in service.

Manually busy the SR128 links using the procedure *Manually busying LIM-to-MS SR128 links* in this document. When you have completed the procedure, return to this point.

17 Manually busy the LIM unit corresponding to the card to be replaced, by typing

>BSY UNIT unit_no

and pressing the Enter key.

where

unit_no
is the number of the LIM unit (0 or 1)

Example of a MAP response:

```
bsy unit 0
LIM 0 UNIT 0 Busy initiated.
LIM 0 UNIT 0 Busy passed.
```

System and power cards in an ELPP LIM unit (continued)

At the shelf

18

DANGER
Static electricity damage
Wear a wrist strap connected to the wrist-strap grounding point of a frame supervisory panel (FSP) or a modular supervisory panel (MSP) while handling circuit cards. This protects the cards against damage caused by static electricity.

Press down and release the power switch on the faceplate of the NT9X30 and NT9X31 power converter associated with the card to be replaced. Refer to the table at the end of this document to identify the power converter associated with the LIM unit you are working on.

Note: The CONVERTER OFF LED is lit when the NT9X30 and NT9X31 power converter is powered down.

If the CONVERTER OFF LED is	Do
lit	step 21
not lit	step 19

19

CAUTION
Possible loss of service
Unseating the NT9X13 card bypasses the safety interlock. Ensure that the card to be removed is in the manual-busy LIM unit.

Unseat the NT9X13 associated with the LIM unit you are working on using the procedure *Unseating cards in equipment shelves* in this document. When you have completed the procedure, return to this point.

Note: Refer to the table at the end of this document to identify the NT9X13 associated with the LIM unit you are working on.

20 Press down and release the power switch on the faceplate of the NT9X30 and NT9X31 power converter associated with the card to be replaced. Refer to the table at the end of this document to identify the power converter associated with the LIM unit you are working on.

21 Replace the card using the procedure *Replacing a card* in this document. When you have completed the procedure, return to this point.

Note 1: Ensure that the handle of the power switch on the replacement power converter is also in the OFF position.

System and power cards in an ELPP LIM unit (continued)

Note 2: If the card to be replaced has switches, ensure that the switches on the replacement card have the same settings.

22 The next step depends on the condition of the NT9X13 card associated with the card you have replaced.

If the NT9X13 is	Do
seated	step 24
unseated	step 23

23 Reseat the NT9X13 associated with the card you are replacing using the procedure *Reseating cards in equipment shelves* in this document. When you have completed the procedure, return to this point.

24 Release the power switch on the faceplate of the NT9X30 and NT9X31 power converter associated with the card you have replaced.

Note: The CONVERTER OFF LED is not lit when the NT9X30 and NT9X31 power converter is powered up.

25 The next action depends on your reason for performing this procedure

If you were	Do
sent to this procedure from another maintenance procedure	step 26
not sent to this procedure from another maintenance procedure	step 27

26 Return to the maintenance procedure that sent you to this procedure and continue as directed.

At the MAP terminal

27 The next step depends on the card you are replacing.

If you are replacing	Do
an NT9X17 or an NT9X62 (LMS port cards)	step 28
any other card	step 29

28 Return the SR128 links to service using the procedure *Returning LIM-to-MS SR128 links to service* in this document. When you have completed the procedure, return to this point.

29 Load the LIM unit by typing

```
>LOADPM  UNIT  unit_no
```

and pressing the Enter key.

where

System and power cards in an ELPP LIM unit (continued)

unit_no
is the number of the LIM unit (0 or 1)

Example of a MAP response:

```
LIM 0 UNIT 0 Load initiated.
LIM 0 UNIT 0 Load passed.
```

If the LOADPM command	Do
passed	step 31
failed	step 30

30 Load the PM using the procedure *Loading a PM* in this document. When you have completed the procedure, return to this point.

31 Perform an out-of-service (OOS) test on the LIM unit by typing

>TST UNIT unit_no

and pressing the Enter key.

where

unit_no
is the number of the LIM unit (0 or 1)

Example of a MAP response:

```
LIM 0 UNIT 0 Test initiated.
LIM 0 UNIT 0 Test passed.
```

If the TST command	Do
passed	step 32
failed	step 40

32 Return the LIM unit to service by typing

>RTS UNIT unit_no

and pressing the Enter key.

where

unit_no
is the number of the LIM unit (0 or 1)

Example of a MAP response:

System and power cards in an ELPP LIM unit (continued)

```
LIM 0 UNIT 0 Return to Service initiated.
LIM 0 UNIT 0Return to Service passed.
```

If the RTS command	Do
passed	step 33
failed	step 40

33 Perform an in-service (InSv) test on the LIM unit by typing

>TST UNIT unit_no

and pressing the Enter key.

where

unit_no
is the number of the LIM unit (0 or 1)

Example of a MAP response:

```
LIM 0 UNIT 0 Test initiated.
LIM 0 UNIT 0 Test passed.
```

If the TST command	Do
passed	step 34
failed	step 40

Note: Steps 34, 35, and 36 must be repeated for each LIS on the LIM unit.

34 Access the LIS level of the MAP display by typing

>LIS lis_no

and pressing the Enter key.

where

lis_no
is the number of the LIS (0, 1, or 2)

Example of a MAP display:

System and power cards in an ELPP LIM unit (continued)

```
          SysB    ManB    OffL    CBsy    ISTb    InSv
    PM     0       0      28       0       0      18
    LIM    0       0       1       0       1       1

LIM 0 ISTb
                  00S   00S_Taps
                   Links  LIS1  LIS2  LIS3
Unit0: ISTb          .      .     12    .
Unit1: InSv          .      .     .     .

       LIS2      Tap:  0     4     8
FBus0: ManB            BBBB  BBBB  BBBB
FBus1: InSv            ....  ....  ....
```

35 Return the F-bus to service by typing

>RTS FBUS fbus_no

and pressing the Enter key.

where

fbus_no
is the number of the F-bus that you busied (0 or 1)

Example of a MAP response:

```
LIM 0 LIS 2 FBus 0 Return to Service initiated.LIM 0 L
2 FBus 0 Return to Service passed.
```

If the RTS command	Do
passed	step 36 for the next LIS OR step 41 (if step 36 has been repeated for each LIS)
failed	step 40

36 Perform an InSv test on the F-bus for each LIS by typing

>TST FBUS fbus_no

and pressing the Enter key.

where

fbus_no
is the number of the F-bus (0 or 1)

Example of a MAP response:

System and power cards in an ELPP LIM unit (continued)

```
LIM 0 UNIT 0 Test initiated.
LIM 0 UNIT 0 Test passed.
```

If the TST command	Do
passed	step 36 for the next LIS OR step 41 (if step 36 has been repeated for each LIS)
failed	step 40

37 Continuing with this procedure removes the entire LIM from service, isolating application specific units (ASU) on the LIS. Consult office personnel or your next level of support to determine if you should continue with this procedure, and proceed as directed.

38 Continuing with this procedure isolates one or more application specific units (ASU) on the LIS. Consult office personnel or your next level of support to determine if you should continue with this procedure, and proceed as directed.

39 Consult office personnel to determine why the component is offline. Continue as directed by office personnel.

40 For further assistance, contact the personnel responsible for the next level of support.

41 You have completed this procedure.

System cards and associated LIM hardware (Sheet 1 of 3)

PEC	Slot	Associated LIM hardware and F-buses	
NT9X15	15F	LIM unit number Mate LIM unit number:	0 1
NT9X26	17R	F-bus number: Mate F-bus number:	0 1
NT9X30	04F	F-bus number: Mate F-bus number:	0 1
NT9X31	01F		

Note: A LIM unit is also referred to as an LMS. LIM unit 0 corresponds to LMS 0; LIM unit 1 corresponds to LMS 1. In MAP commands, responses, and displays, the term LIM unit is used to mean an LMS. The term LIM is also used to mean the ELPP where the entire ELPP cabinet is meant.

System and power cards in an ELPP LIM unit (continued)

System cards and associated LIM hardware (Sheet 2 of 3)

PEC	Slot	Associated LIM hardware and F-buses	
NT9X49	07F	Location of NT9X13	slot 17F
NT9X52	19F	Location of NT9X30 power converter	slot 04F
NT9X53	18F	Location of NT9X30 power converter	slot 04F
NT9X73	13F-LIS1 12F-LIS2 11F-LIS3	Location of NT9X31 power converter	slot 01F
NT9X79	13R-LIS 112R-LI S211R-L IS3	Location of NT9X31 power converter	slot 01F
NT9X17	10F 9F		
NT9X62	10R 9R		
NT9X15	24F	LIM unit number: Mate LIM unit number:	1 0
NT9X26	22R	F-bus number: Mate F-bus number:	1 0
NT9X30	36F	F-bus number: Mate F-bus number	1 0
NT9X31	33F		
NT9X49	32F	Location of NT9X13	slot 22F
NT9X52	20F	Location of NT9X30 power converter	slot 36F

Note: A LIM unit is also referred to as an LMS. LIM unit 0 corresponds to LMS 0; LIM unit 1 corresponds to LMS 1. In MAP commands, responses, and displays, the term LIM unit is used to mean an LMS. The term LIM is also used to mean the ELPP where the entire ELPP cabinet is meant.

System cards and associated LIM hardware (Sheet 3 of 3)

PEC	Slot	Associated LIM hardware and F-buses	
NT9X53	21F	Location of NT9X30 power converter	slot 36F
NT9X73	26F-LIS1 27F-LIS2 28F-LIS3	Location of NT9X31 power converter	slot 38F
NT9X79	26R-LIS 127R-LI S228R-L IS3	Location of NT9X31 power converter	slot 38F
NT9X17	29F 30F		
NT9X62	29R 30R		

Note: A LIM unit is also referred to as an LMS. LIM unit 0 corresponds to LMS 0; LIM unit 1 corresponds to LMS 1. In MAP commands, responses, and displays, the term LIM unit is used to mean an LMS. The term LIM is also used to mean the ELPP where the entire ELPP cabinet is meant.

6 SuperNode SE enhanced network card replacement procedures

Introduction

This chapter provides card replacement procedures for the SuperNode SE enhanced network (ENET). The first section in the chapter provides diagrams of SuperNode SE ENET shelf designs.

Card replacement procedures for the SuperNode ENET are in the chapter “SuperNode network card replacement procedures".

Card replacement procedures for the frame supervisory panel (FSP) and modular supervisory panel (MSP) are in the chapter “Frame supervisory panel and maintenance supervisory panel card replacement procedures".

Each procedure contains the following sections:

- Application
- Common procedures
- Action

Application

This section identifies the ENET card(s) covered by the replacement procedure.

Common procedures

This section lists common procedures in the ENET card replacement procedure. A common procedure is a series of steps repeated within maintenance procedures. Steps for the removal replacement of a card are examples of common procedures. Common procedures are in the common procedures chapter in this NTP.

Do not use common procedures unless the step-action procedure directs you.

Action

This section contains a summary flowchart and a list of steps. Use the flowchart to review the procedure. Follow the steps to perform the procedure.

Recording card replacement activities

When you replace a card, record the following information in office records:

- the serial number of the card replaced
- the date that you replaced the card
- the reason that you replaced the card

SuperNode SE ENET shelf designs

Application

This procedure provides the following design figures:

- single core cabinet (SCC, SuperNode SE 16k ENET)
- SuperNode SE 32k ENET cabinet
- SuperNode SE enhanced network and interface (ENI) shelf (16k ENET)
- SuperNode SE ENET shelf, 32k ENET

Figure Single core cabinet

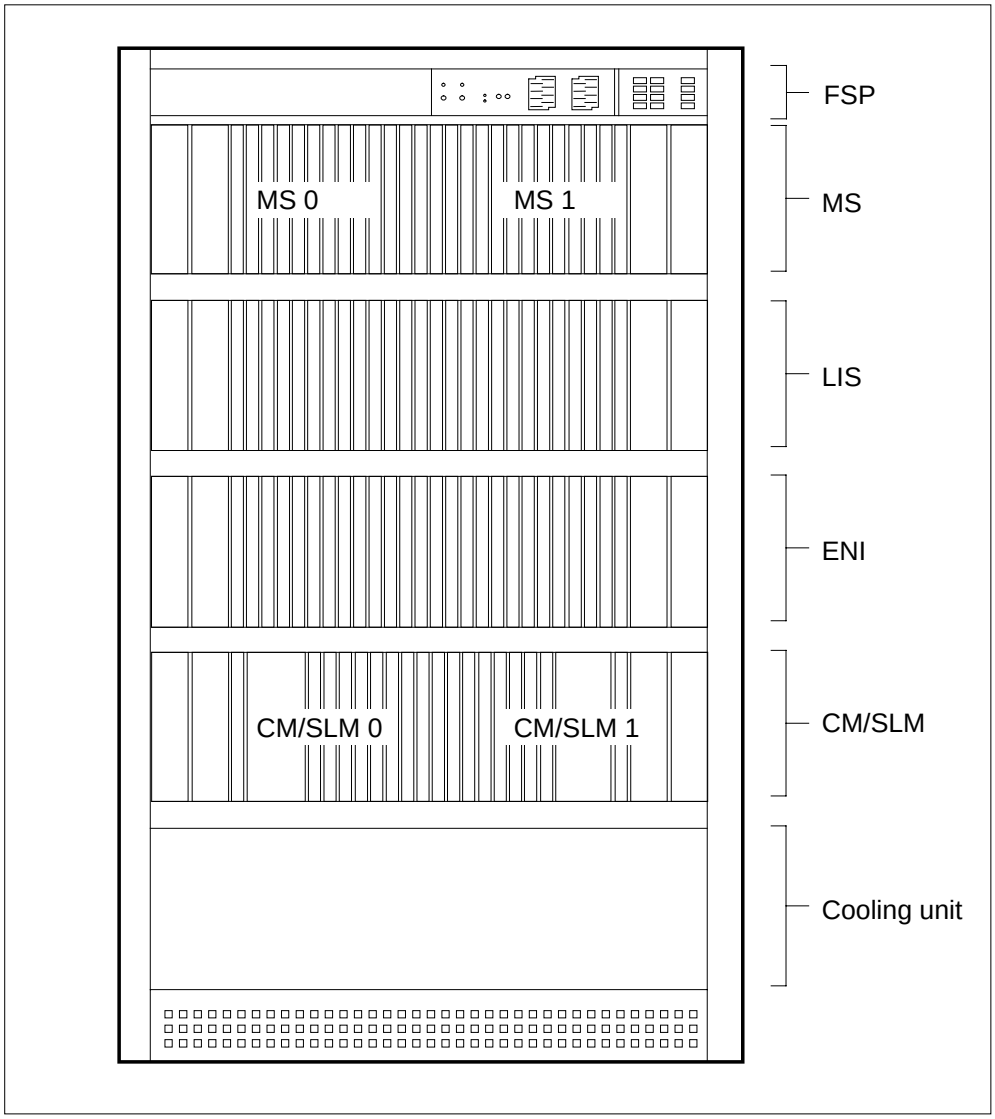

SuperNode SE ENET shelf designs (continued)

Figure SuperNode SE 32k ENET cabinet

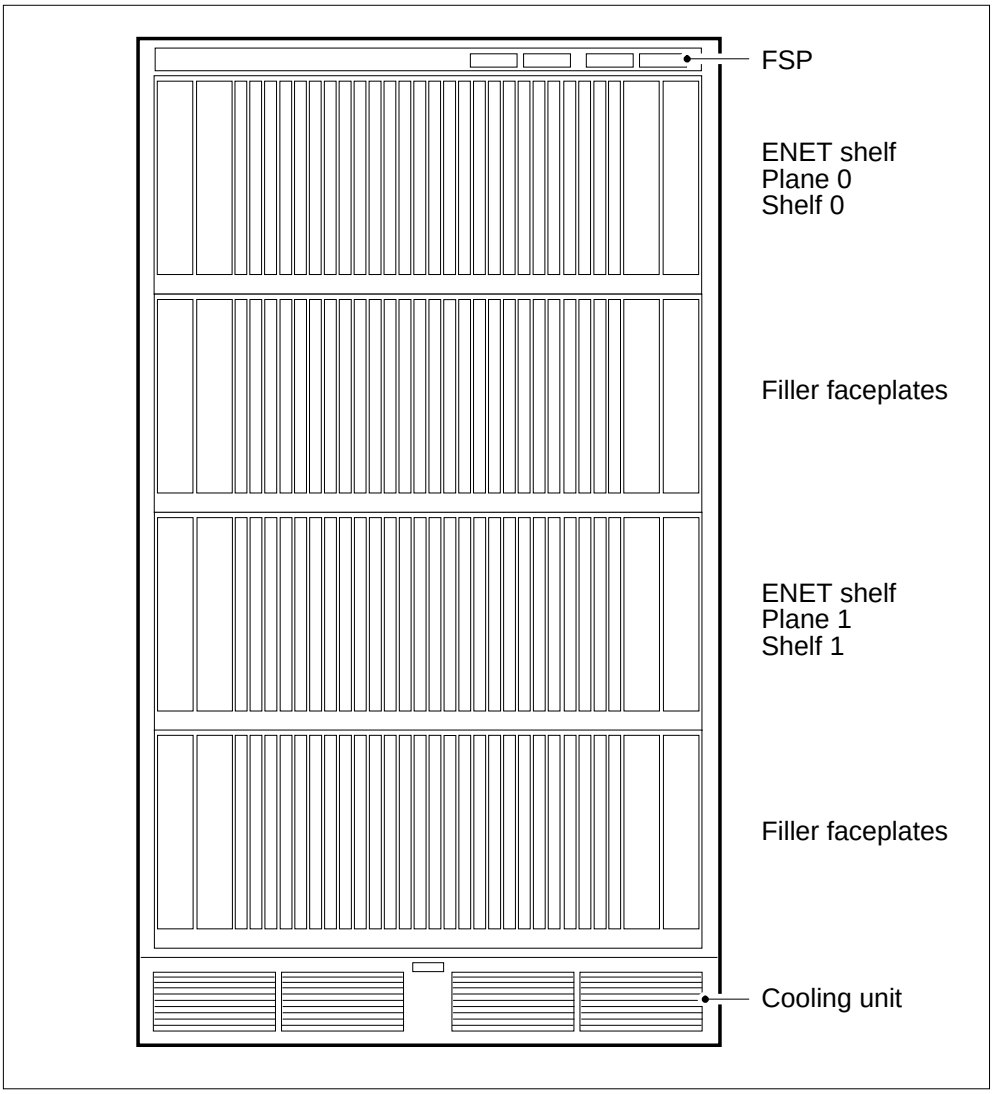

SuperNode SE ENET shelf designs (continued)

Figure SuperNode SE ENI shelf with 16k ENET

	Paddle boards	*Cards*	
		NT9X30 +5V power converter card	36F
		NT9X31 –5V power converter card	33F
32R	NT9X19 Filler faceplate	NT9X19 Filler faceplate	32F
31R	NT9X19 Filler faceplate	NT9X19 Filler faceplate	31F
30R	NT9X19 Filler faceplate	NT9X19 Filler faceplate	30F
29R	NT9Xnn*	NT9X35 Crosspoint card	29F
28R	NT9Xnn*	NT9X35 Crosspoint card	28F
27R	NT9Xnn*	NT9X35 Crosspoint card	27F
26R	NT9Xnn*	NT9X35 Crosspoint card	26F
25R	NT9Xnn*	NT9X35 Crosspoint card	25F
24R	NT9Xnn*	NT9X35 Crosspoint card	24F
23R	NT9Xnn*	NT9X35 Crosspoint card	23F
22R	NT9X19 Filler faceplate	NT9X35 Crosspoint card	22F
21R	NT9X40	NT9X36 ENET message clock card	21F
20R	NT9X26 RTIF PB	NT9X13 Processor card	20F
19R	NT9Xnn*	NT9X35 Crosspoint card	19F
18R	NT9Xnn*	NT9X35 Crosspoint card	18F
17R	NT9Xnn*	NT9X35 Crosspoint card	17F
16R	NT9Xnn*	NT9X35 Crosspoint card	16F
15R	NT9Xnn*	NT9X35 Crosspoint card	15F
14R	NT9Xnn*	NT9X35 Crosspoint card	14F
13R	NT9Xnn*	NT9X35 Crosspoint card	13F
12R	NT9X19 Filler faceplate	NT9X35 Crosspoint card	12F
11R	NT9X40	NT9X36 ENET message clock card	11F
10R	NT9X26 RTIF PB	NT9X13 DMS SuperNode processor card	10F
09R	NT9X19 Filler faceplate	NT9X19 Filler faceplate	09F
08R	NT9X19 Filler faceplate	NT9X19 Filler faceplate	08F
07R	NT9X19 Filler faceplate	NT9X19 Filler faceplate	07F
	Note: nn* denotes one of NT9X40 fiber interface PB, NT9X41 DS30 PB, or NT9X45 combined DS30/DS512 PB	NT9X30 +5V power converter card	04F
		NT9X31 –5V power converter card	01F

Rear *Front*

SuperNode SE ENET shelf designs (end)

Figure Shelf for SuperNode SE 32k ENET

	Paddle boards		*Cards*		
			NT9X30	Power converter card	36F
			NT9X31	Power converter card	33F
32R	NT9X40/41/45	PM I/F PB	NT9X35	H-bus terminating crosspoint card	32F
31R	NT9X40/41/45	PM I/F PB	NT9X35	H-bus terminating crosspoint card	31F
30R	NT9X40/41/45	PM I/F PB	NT9X35	16K x 16K crosspoint card	30F
29R	NT9X40/41/45	PM I/F PB	NT9X35	16K x 16K crosspoint card	29F
28R	NT9X40/41/45	PM I/F PB	NT9X35	16K x 16K crosspoint card	28F
27R	NT9X40/41/45	PM I/F PB	NT9X35	16K x 16K crosspoint card	27F
26R	NT9X40/41/45	PM I/F PB	NT9X35	16K x 16K crosspoint card	26F
25R	NT9X40/41/45	PM I/F PB	NT9X35	16K x 16K crosspoint card	25F
24R	NT9X19	Filler faceplate	NT9X19	Filler faceplate	24F
23R	NT9X19	Filler faceplate	NT9X19	Filler faceplate	23F
22R	NT9X19	Filler faceplate	NT9X19	Filler faceplate	22F
21R	NT9X19	Filler faceplate	NT9X19	Filler faceplate	21F
20R	NT9X19	Filler faceplate	NT9X19	Filler faceplate	20F
19R	NT9X19	Filler faceplate	NT9X19	Filler faceplate	19F
18R	NT9X19	Filler faceplate	NT9X19	Filler faceplate	18F
17R	NT9X19	Filler faceplate	NT9X19	Filler faceplate	17F
16R	NT9X40/41/45	PM I/F PB	NT9X35	16K x 16K crosspoint card	16F
15R	NT9X40/41/45	PM I/F PB	NT9X35	16K x 16K crosspoint card	15F
14R	NT9X40/41/45	PM I/F PB	NT9X35	16K x 16K crosspoint card	14F
13R	NT9X40/41/45	PM I/F PB	NT9X35	16K x 16K crosspoint card	13F
12R	NT9X40/41/45	PM I/F PB	NT9X35	16K x 16K crosspoint card	12F
11R	NT9X40/41/45	PM I/F PB	NT9X35	16K x 16K crosspoint card	11F
10R	NT9X40/41/45	PM I/F PB	NT9X35	H-bus terminating crosspoint card	10F
09R	NT9X19	Filler faceplate	NT9X35	H-bus terminating crosspoint card	09F
08R	NT9X40	QUAD fibre MS I/F PB	NT9X36	Clock and message card	08F
07R	NT9X26	RTIF PB	NT9X13	CPU card	07F
			NT9X30	Power converter card	04F
			NT9X31	Power converter card	01F

Rear *Front*

Crosspoint and interface cards in a SuperNode SE 16k ENET

Application

Use this procedure to replace the following cards in a SuperNode SE (SNSE) 16k enhanced network (ENET).

PEC	Suffix	Card name	Shelf or frame name
NT9X35	FA	DMS SuperNode processor card	Enhanced network and interface (ENI)
NT9X40	BA, BB, DA	ENET + quad fiber paddle board	ENI, slots 13 to 19 and 23 to 29
NT9X41	BA	16-port DS30 paddle board	ENI
NT9X45	BA	Three-DS512 link and 16-DS30 port paddle board	ENI

Note: Use the procedure *System cards in a Supernode SE 16k ENET* in this chapter to replace an NT9X40 in ENI shelf slots 11 or 21.

Refer to the “Index", if you cannot identify the following features for the card that you want to replace:

- product engineering code (PEC)
- PEC suffix
- provisioned shelf
- provisioned frame

The “Index" contains a list of the cards, shelves, and frames documented in this card replacement book.

Common procedures

This procedure refers to the following common procedures:

- *Verifying load compatibility of SuperNode cards*
- *Replacing a card*
- *Cleaning fiber optic components and assemblies*

Do not go to the common procedure unless the step-action procedure directs you.

Crosspoint and interface cards in a SuperNode SE 16k ENET (continued)

Action

This procedure contains a summary flowchart and a list of terms. Use the flowchart to review the procedure. Follow the steps to perform the procedure.

Crosspoint and interface cards in a SuperNode SE 16k ENET (continued)

Summary of Replacing Crosspoint and interface cards in a SuperNode SE 16k ENET

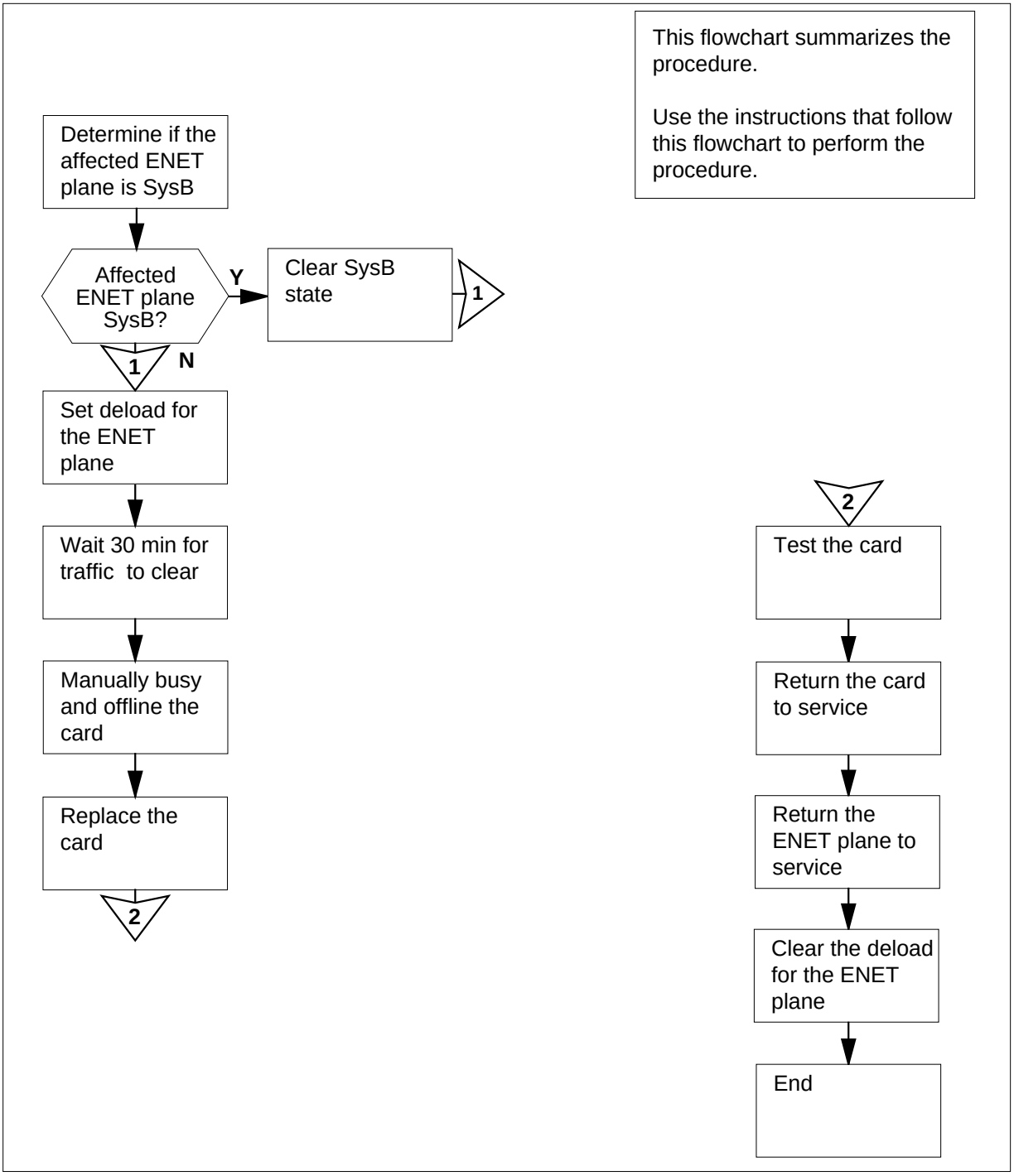

Crosspoint and interface cards in a SuperNode SE 16k ENET (continued)

Replacing Crosspoint and interface cards in a SuperNode SE 16k ENET

At your current location

1 Determine the type and location of the card that you replace.

If the card	Do
is an NT9X40 in slots 11 or 21	step 2
is other than listed here	step 3

2 To replace the card, perform the procedure *System cards in a SuperNode SE 16k ENET* in this chapter.

3

> **CAUTION**
> **System can drop calls**
> This procedure can remove an ENET card or MS-ENET link from service, which can cause the system to drop calls that are in progress. Perform this procedure only when you need to return an interface or crosspoint card to service. If you do not need to return the interface or crosspoint card to service, perform this procedure during periods of low traffic.

Obtain a replacement card. Make sure that the replacement card has the same PEC and PEC suffix as the card you that you remove.

Note: For North American switches, NT9X40BA and NT9X40BB can interchange and can be present with other switches at the same time. International switches can contain only NT9X40BB.

4 To make sure the replacement card is compatible with the software load, perform the procedure *Verifying load compatibility of SuperNode cards*. The procedure *Verifying load compatibility of SuperNode cards* appears in this document. Complete the procedure and return to this point.

At the MAP terminal

5 To access the NET;SYSTEM level of the MAP display, type

`>MAPCI;MTC;NET;SYSTEM`

and press the Enter key.

Example of a MAP display:

Crosspoint and interface cards in a SuperNode SE 16k ENET (continued)

```
SYSTEM
  Shelf        Plane 0                    Plane 1
   00            I CSLink 1 closed            .
```

6 Determine the state of the ENET plane that contains the card that you replace. The state appears under the Plane headers on the SYSTEM level MAP display. In the MAP display example in step 5, plane 0 is in-service trouble `I` and plane 1 is in service.

If the state of the ENET plane	Do
is T (being tested)	step 7
is S (system busy)	step 8
is other than listed here	step 10

7 Wait for the system to complete the system-initiated testing. To evaluate the state of the ENET plane, go to step 6.

8 You must clear the system busy state of the ENET plane before you attempt to replace the card. Obtain copies of recent ENET log reports. Determine from the log messages if ENET system cards or power converters require replacement.

If	Do
any system cards or power converters require replacement	step 9
system cards or power converters do not require replacement	step 65

9 To replace the card (or cards), perform the correct procedure in this chapter. Complete the card replacement and return to step 6.

10 To determine if deloaded crosspoint cards are in the other ENET plane, type

`>DELOAD plane_no 0 QUERY`

and press the Enter key.

where

plane_no
is the ENET plane number (0 or 1) for the mate node

Example of a MAP response:

Crosspoint and interface cards in a SuperNode SE 16k ENET (continued)

```
Request to QUERY DELOAD ENET Plane:0 Shelf:00 submitted.
Request to QUERY DELOAD ENET Plane:0 Shelf:00 passed.
                    1111111 111
                    0123456 789
Plane:0 Shelf:00 .Y.---- ---
```

Note: The letter Y under the slot number indicates a deloaded crosspoint card.

If the other ENET plane	Do
has deloaded cards	step 64
does not have deloaded cards	step 11

11 To determine if the ENET plane has any deloaded crosspoint cards, type

`>DELOAD plane_no 0 QUERY`

and press the Enter key.

where

plane_no
is the number of the ENET plane (0 or 1) that contains the card that you replace

If the ENET plane	Do
has deloaded cards	step 12
does not have deloaded cards	step 13

12 Record the plane number slot number for any deloaded crosspoint cards in the ENET plane. Use this list to make sure that these cards are returned to the deloaded state when you complete this procedure.

13 To set all crosspoint cards to a deloaded status for the ENET plane that contains the card you replace, type

`>DELOAD plane_no 0 SET`

and press the Enter key.

where

plane_no
is the ENET plane number (0 or 1)

Example of a MAP response:

```
Request to SET DELOAD ENET Plane:0 Shelf:00 submitted.
Request to SET DELOAD ENET Plane:0 Shelf:00 passed.
```

14 Wait 30 min to permit network traffic on the ENET plane to clear.

Crosspoint and interface cards in a SuperNode SE 16k ENET (continued)

15 The next action depends on the state of the ENET plane.

If the ENET plane	Do
is O (offline)	step 20
is M (manual busy)	step 18
is other than listed here	step 16

16 To manually busy the ENET plane, type

>BSY plane_no 0

and press the Enter key.

where

plane_no
is the number of the ENET plane (0 or 1) that contains the card you replace

Example of a MAP response:

Request to MAN BUSY ENET Plane:0 Shelf:00 submitted.
Request to MAN BUSY ENET Plane:0 Shelf:00 passed.

If the response	Do
requests confirmation	step 17
indicates the BSY command passed	step 18

17 To confirm the command, type

>YES

and press the Enter key.

If the BSY command	Do
passed	step 18
failed	step 66

18 To offline the ENET plane, type

>OFFL plane_no 0

and press the Enter key.

where

plane_no
is the number of the ENET plane (0 or 1) that contains the card you replace

Crosspoint and interface cards in a SuperNode SE 16k ENET (continued)

Example of a MAP response:

```
WARNING: A power down of ENET plane:1 shelf:00 may affect LIU
components.
Please confirm ("YES", "Y", "NO", or "N"):
```

19 To confirm the command, type

>YES

and press the Enter key.

If the OFFL command	Do
passed	step 26
failed	step 66

20 To locate the message switch (MS) chain head card that associates with the ENET plane, type

>TRNSL plane_no 0

and press the Enter key.

where

plane_no
is the ENET plane number (0 or 1)

Example of a MAP response:

```
Request to TRNSL ENET Plane:0 Shelf:00 submitted.
Request to TRNSL ENET Plane:0 Shelf:00 passed.
ENET Plane:0  Shelf:00 :  MS 0 and 1 Card:05 Link:00 Port:000
```

Note: In the example, the number of the chain head card is 5. The link number is 0.

21 Record the number of the chain head card and the link number.

22 To access the MS SHELF level of the MAP display, type

>MS;SHELF

and press the Enter key.

Example of a MAP display:

```
     Message Switch        Clock      Shelf  0          Inter-MS Link  0   1
MS 0        .             Slave              .                          .   .
MS 1        .              M Free            .                          .   .

Shelf 0                          1 1 1 1
Card  1 2 3 4 5 6 7 8 9 0 1 2 3
Chain         |
MS 0  . . . . . - - . . . . . .
MS 1  . . . . . - -  . . . . . .
```

Crosspoint and interface cards in a SuperNode SE 16k ENET (continued)

23 To post the chain head card, type

>CHAIN card_no

and press the Enter key.

where

card_no
is the card number that you recorded in step 21

Example of a MAP display:
Chain 05 Range Link 0 1
MS 0 . 05-05 DS512 . .
MS 1 . 05-05 DS512 . .

24 To manually busy the link on the chain on MS 0, type

>BSY 0 LINK link_no

and press the Enter key.

where

link_no
is the link number that you recorded in step 21

Example of a MAP response:
Request to MAN BUSY MS: 0 shelf: 0 chain:05 link 0 submitted.
Request to MAN BUSY MS: 0 shelf: 0 chain:05 link 0 passed.

If the BSY command	Do
passed	step 25
failed	step 66

25 To manually busy the link on the chain on MS 1, type

>BSY 1 LINK link_no

and press the Enter key.

where

link_no
is the link number that you recorded in step 21

If the BSY command	Do
passed	step 26
failed	step 66

26 To access the ENET SHELF level of the MAP display, type

>ENET;SHELF

and press the Enter key.

Example of a MAP display:

Crosspoint and interface cards in a SuperNode SE 16k ENET (continued)

```
ENET     System   Matrix  Shelf 0
 Plane 0   .        .           .
 Plane 1   .      Fault         F

SHELF 00  Power   LIU  ENET-Plane 0 ENET-Plane 1  LIU Power
                      11  11111111 22  22222222  333  333333

Slot     123456  789  01  23456789 01  23456789  012  345678
         .  .         ..  ........ ..  .....F..        .  .
```

27 To access the CARD level for the card you replace, type

>CARD card_no

and press the Enter key.

where

card_no
is the number of the card you replace

Example of a MAP display:

```
CARD  Plane  Front:    Back:
             Xpt       NIL
12     0      .         -
22     1      .         -
```

28 To confirm the command, type

>YES

and press the Enter key.

29 To offline all cards in the ENET shelf, type

>OFFL plane_no ALL

and press the Enter key.

where

plane_no
is the number of the ENET plane (0 or 1) that contains the card you replace

Example of a MAP response:

```
Request to OFFLINE ENET Plane:0 Shelf:00 Slot:12 submitted.
Request to OFFLINE ENET Plane:0 Shelf:00 Slot:12 passed.
```

Crosspoint and interface cards in a SuperNode SE 16k ENET (continued)

At the ENET shelf

30

WARNING
Static electricity damage
Wear a wrist strap that connects to the wrist-strap grounding point of a frame supervisory panel (FSP) or a modular supervisory panel (MSP) to handle circuit cards. The wrist strap protects the cards against static electricity damage.

The next action depends on the card you replace.

If you	Do
replace an NT9X35	step 31
replace an NT9X41	step 32
replace an NT9X40 or NT9X45	step 35

31 To replace the card, perform the procedure *Replacing a card* in this NTP. Complete the procedure and go to step 44.

32 Locate the NT9X41 card and disconnect the DS30 connectors.

Note: The DS30 connectors appear in the diagram on the next page.

a Loosen the screws that retain the connector.

b Unplug the connectors.

Crosspoint and interface cards in a SuperNode SE 16k ENET (continued)

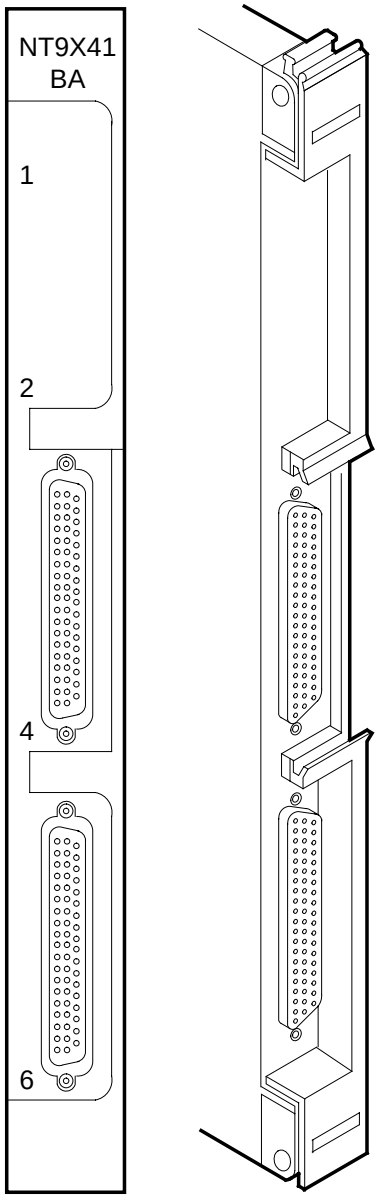

33 To replace the card, perform the procedure *Replacing a card* in this NTP. Complete the procedure and return to this point.

34 Reconnect the DS30 connectors.

a Plug the connectors into the card.

Crosspoint and interface cards in a SuperNode SE 16k ENET (continued)

b Tighten the screws that retain the connector.

Go to step 44.

35

> **ATTENTION**
> Make sure that you identify connector zone numbers correctly. To identify zone numbers, refer to figure "NT9X40BA/BB connector zone numbers" for the NT9X40 and figure "NT9X45BA connector zone numbers" for the NT9X45. Figure "NT9X40BA/BB connector zone numbers" appears at the end of this procedure. Figures "Fiber connector detail" and "Fiber connector and receptacle detail" are diagrams of fiber connector components for these cards.

Make sure that you are at the correct ENET node and the interface card, before you disconnect the fiber cables. To identify the ENET node, check the plane and shelf identification. To identify the interface card, check the slot.

36 Make sure that each cable has a label that contains the following information:

- ENET shelf number
- plane number
- slot numbers
- link number
- signal type

The signal type can be transmit or receive. If this information is not present, create a label and attach the label to the cable. This label provides the information that you need to connect the fiber cables to the card correctly.

Example of a label:

ENCO	00	39
10R	04	17T
LTE	000	18
22R	RX	

Label field descriptions

Crosspoint and interface cards in a SuperNode SE 16k ENET (continued)

ENCO	ENET plane (0 or 1)
00	cabinet number
39	ENET shelf by the base mounting position number
10R	slot number and position (R for rear, or F for front)
04	zone number
17T	link number and the signal type (T for transmit, R for receive)
LTE	PM that the cable terminates on
000	PM frame number
18	PM shelf by the base mounting position number
22R	slot number and position (R for rear, or F for front)
RX	signal type at the PM end (RX for receive or TX for transmit)

37

DANGER
Avoid contamination of the fiber tip surface
Make sure that you do not touch the tip of the fiber. Dirt or oil from the skin transferred to the fiber tip surface degrades fiber performance.

DANGER
Fiber cable can become defective
Make sure that you handle fiber cables carefully. Do not crimp fiber cables or bend fiber cables to a radius of less than 3 cm (1.180 in.).

Disconnect the transmit and receive connectors for each fiber cable as follows.

Note: When you disconnect the connectors, place dust caps on the ends of the connectors.

a Grasp the sleeve with two fingers. Carefully push the sleeve toward the frame.

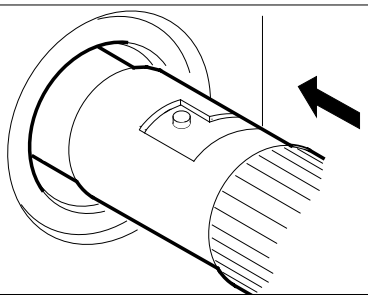

Crosspoint and interface cards in a SuperNode SE 16k ENET (continued)

b Turn the connector counterclockwise until the connector pin is in the position shown in the following diagram.

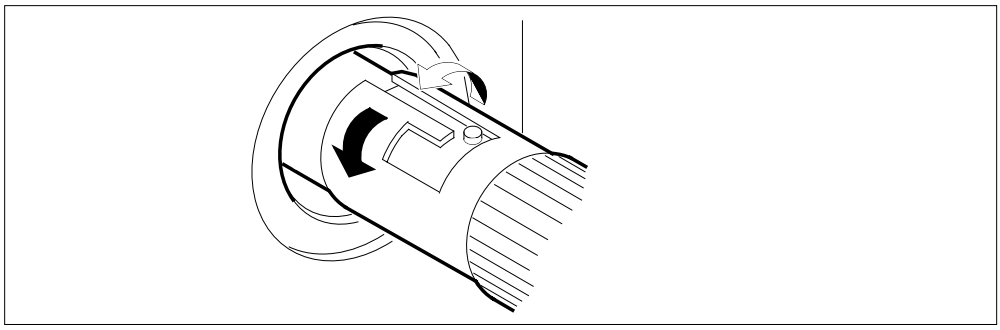

c Carefully pull the connector away from the frame.

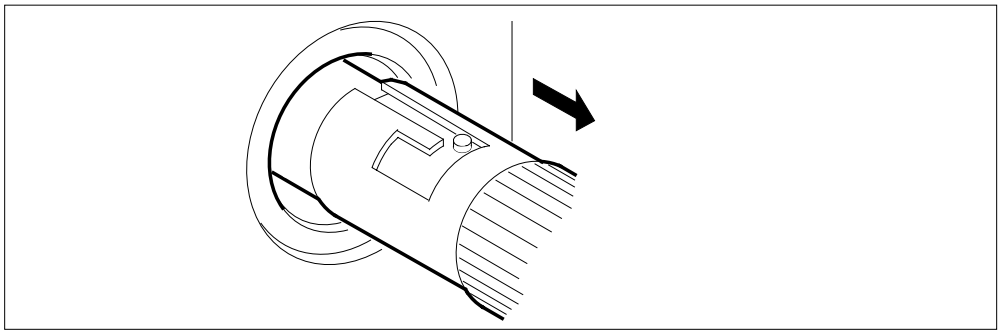

Note: Perform the procedure, *Cleaning fiber optic components and assemblies* in this NTP.

38 The next action depends on the card that you replace.

If you	Do
replace an NT9X45	step 39
replace an NT9X40	step 40

39 Disconnect the DS30 connectors, as follows:

a Loosen the screws that retain the connector.

b Unplug the connectors.

40 To replace the card, perform the procedure *Replacing a card* in this NTP. Complete the procedure and return to this point.

41 Remove the dust caps on the transmit and receive connectors as you connect the connectors to the new card.

Reconnect the transmit and receive connectors for each fiber cable, as follows.

a Align the connector pin and slot with the receptacle slot and pin, in the sequence given, as shown.

Crosspoint and interface cards in a SuperNode SE 16k ENET (continued)

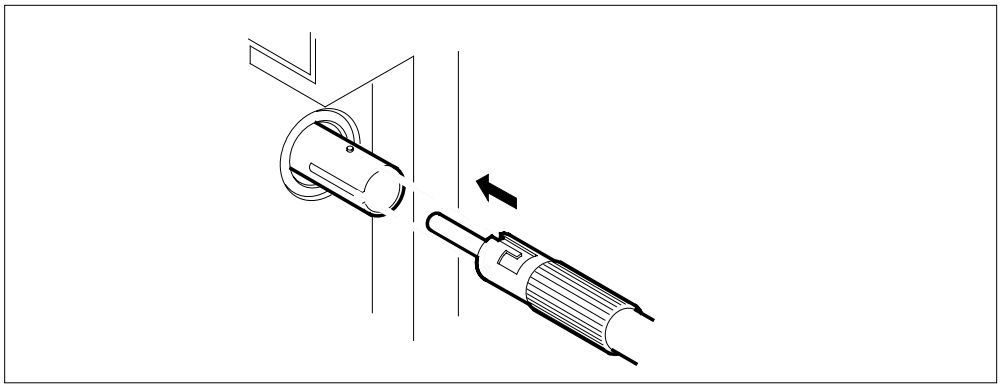

b Carefully slide the connector into the receptacle.

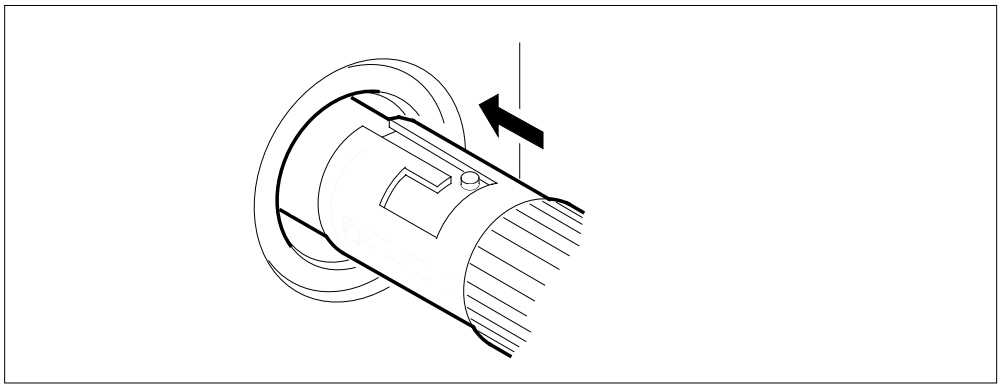

c Turn the connector clockwise to lock the connector in place.

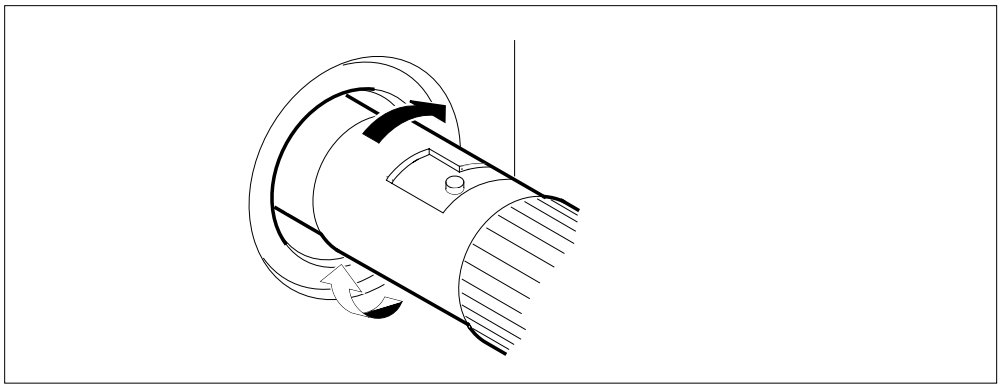

d Release the connector. The following figure illustrates the final connector position.

Crosspoint and interface cards in a SuperNode SE 16k ENET (continued)

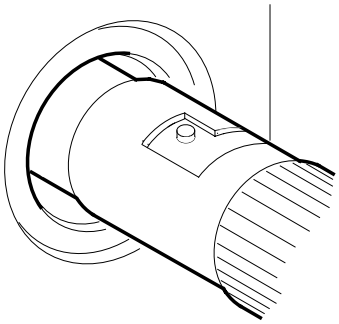

42 The next action depends on the card you replace.

If you	Do
replace an NT9X45	step 43
replace an NT9X40	step 44

43 Reconnect the DS30 connectors, as follows.

a Plug the connectors into the card.

b Tighten the screws that retain the connector.

At the MAP terminal

44 To access the MS Chain card level of the MAP display, type

`>MS;SHELF;CHAIN card_no`

and press the Enter key.

where

card_no
is the card number that you recorded in step 21

45 To return the link on the chain on MS 0 to service, type

`>RTS 0 LINK link_no`

and press the Enter key.

where

link_no
is the link number that you recorded in step 21

Example of a MAP response:

Crosspoint and interface cards in a SuperNode SE 16k ENET (continued)

```
Request to RTS MS: 0 shelf: 0 chain:05 link 0 submitted.
Request to RTS MS: 0 shelf: 0 chain:05 link 0 passed.
```

If the RTS command	Do
passed	step 46
failed	step 66

46 To return the link on the chain on MS 1 to service, type

>RTS 1 LINK link_no

and press the Enter key.

where

link_no
is the link number that you recorded in step 21

If the RTS command	Do
passed	step 47
failed	step 66

47 To access the NET;SYSTEM level of the MAP display, type

>NET;SYSTEM

and press the Enter key.

48 To manually busy the ENET plane that contains the replacement card, type

>BSY plane_no 0

and press the Enter key.

where

plane_no
is the number of the ENET plane (0 or 1) that contains the card

If the respobse	Do
requests confirmation	step 49
indicates the BSY command passed	step 50

49 To confirm the command, type

>YES

Crosspoint and interface cards in a SuperNode SE 16k ENET (continued)

and press the Enter key.

If the BSY command	Do
passed	step 50
failed	step 66

50 To return the ENET plane to service, type

>RTS plane_no 0

and press the Enter key.

where

plane_no
is the number of the ENET plane (0 or 1) that contains the card

Example of a MAP response:

```
Request to RTS ENET Plane:0 Shelf:01 submitted.
Request to RTS ENET Plane:0 Shelf:01 passed.
```

If the RTS command	Do
passed	step 51
failed	step 66

51 To access the SHELF level of the MAP display, type

>SHELF

and press the Enter key.

52 To manually busy all cards on the ENET shelf, type

>BSY plane_no ALL

and press the Enter key.

where

plane_no
is the number of the ENET plane (0 or 1) that contains the card

If the BSY command	Do
passed	step 53
failed	step 66

53 To return the card to service, type

>RTS plane_no

and press the Enter key.

Crosspoint and interface cards in a SuperNode SE 16k ENET (continued)

where

plane_no
is the number of the ENET plane (0 or 1) that contains the card

Example of a MAP response:

```
Request to RTS ENET Plane:0 Shelf:00 Slot:12 submitted.
Request to RTS ENET Plane:0 Shelf:00 Slot:12 passed.
```

If the RTS command	Do
passed	step 56
failed	step 66

54 The replacement card is faulty. Obtain another replacement card.

55 To access the SYSTEM level of the MAP display, type

>SYSTEM

and press the Enter key.

Go to step 16

56 To access the NET;SYSTEM level of the MAP display, type

>SYSTEM

and press the Enter key.

57 To clear the deload condition on all crosspoint cards in the ENET plane, type

>DELOAD plane_no 0 CLEAR

and press the Enter key.

where

plane_no
is the ENET plane number (0 or 1)

Example of a MAP response:

```
Request to CLEAR DELOAD ENET Plane:0 Shelf:00 submitted.
Request to CLEAR DELOAD ENET Plane:0 Shelf:00 passed.
```

58 The next action depends on if you recorded a card list in step 12.

If you	Do
recorded a card list	step 59
did not record a card list	step 62

59 To access the SHELF level of the MAP display, type

>SHELF 0

Crosspoint and interface cards in a SuperNode SE 16k ENET (continued)

and press the Enter key.

60 To set the first card on the list to the deloaded status, type

```
>DELOAD  plane_no  slot_no  SET
```

and press the Enter key.

where

plane_no
is the ENET plane number (0 or 1)

slot_no
is the number of the slot the card occupies (slots 12 to 19 on plane 0 or slots 22 to 29 on plane 1)

If all cards on the list	Do
are not set to deloaded status	step 61
are set to deloaded status	step 62

61 Repeat step 60 for the next card on the list.

62 The next action depends on the reason that you perform this procedure.

If a maintenance procedure	Do
directed you to this procedure	step 63
did not direct you to this procedure	step 67

63 Return to the maintenance procedure that directed you to this procedure and continue as directed.

64 This procedure instructs you to deload a node. Continue this procedure only under special conditions because the mate node has deloaded cards. Consult office personnel or the next level of support. Continue as directed.

65 To obtain help on how to identify the cause of the system busy condition, contact the next level of support. Continue as directed.

66 For additional help, contact the next level of support.

67 The procedure is complete.

Crosspoint and interface cards in a SuperNode SE 16k ENET (continued)

NT9X40BA/BB connector zone numbers

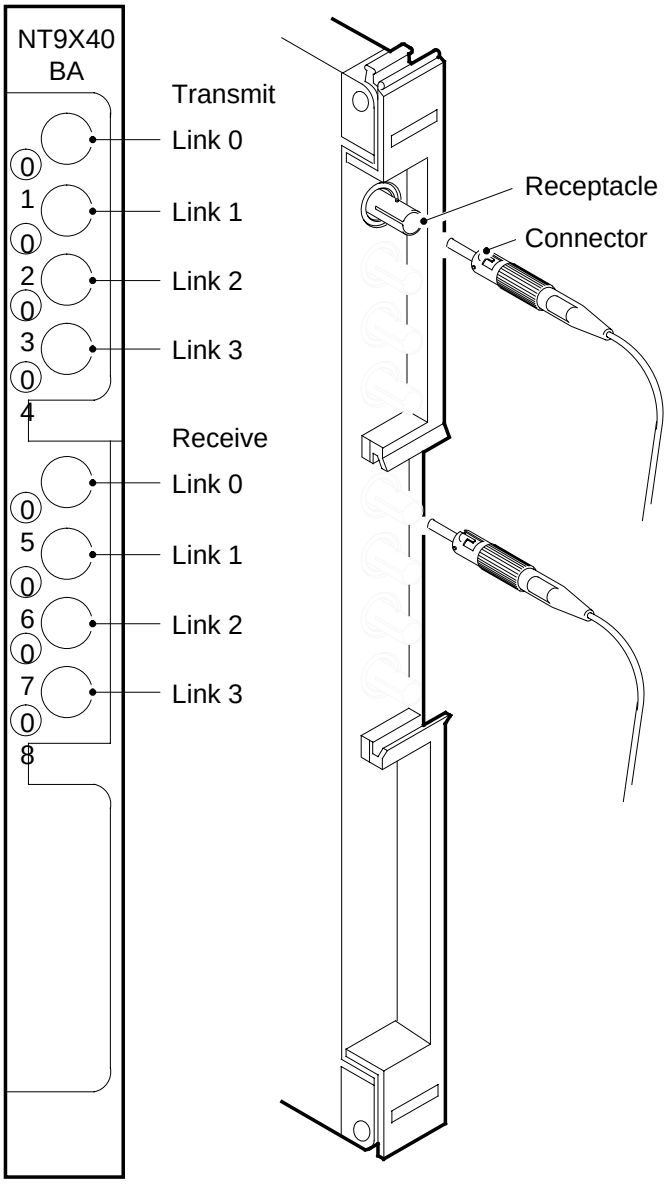

The figure correlates the zone numbers (1 to 8) to the link numbers. The zone numbers appear on the face of the card. The link numbers appear on the MAP display for the NT9X40BA or NT9X40BB interface card. Note that the diagram indicates fiber connections only. Observe carefully the zone identification marks for transmit and receive.

Crosspoint and interface cards in a SuperNode SE 16k ENET (continued)

NT9X45BA connector zone numbers

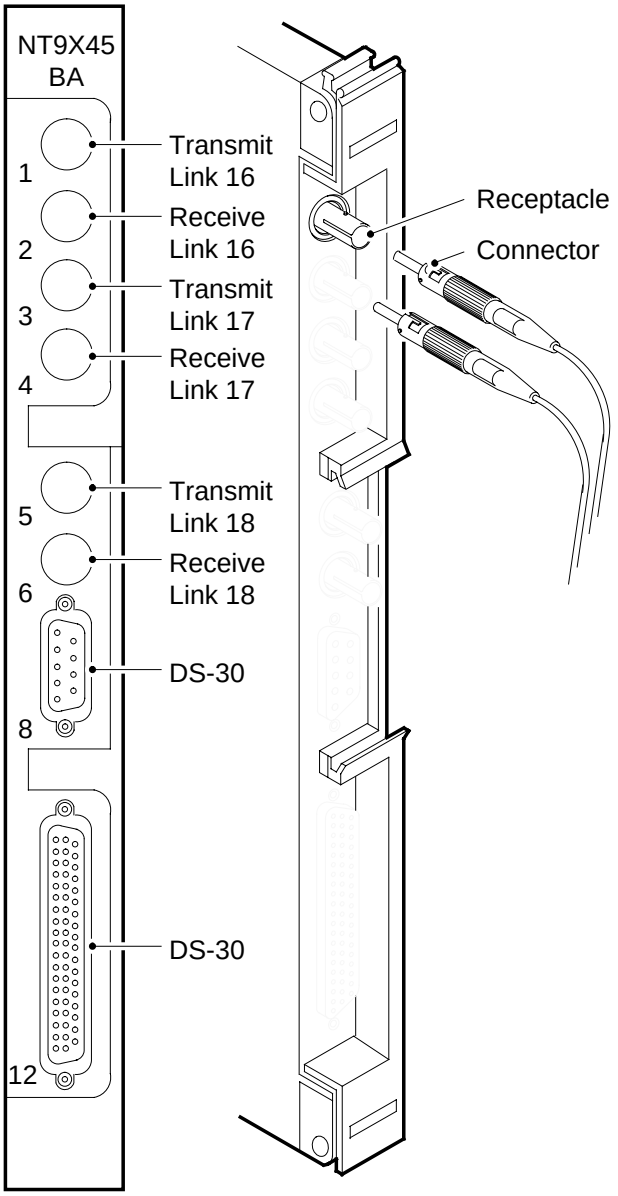

The figure correlates the zone numbers (1 to 12) to the link numbers. The zone numbers appear on the face of the card. The link numbers appear on the MAP display for the NT9X45BA interface card. Note that the diagram indicates fiber connections only. Observe carefully the zone identification marks for transmit and receive.

Crosspoint and interface cards in a SuperNode SE 16k ENET (end)

Fiber connector detail

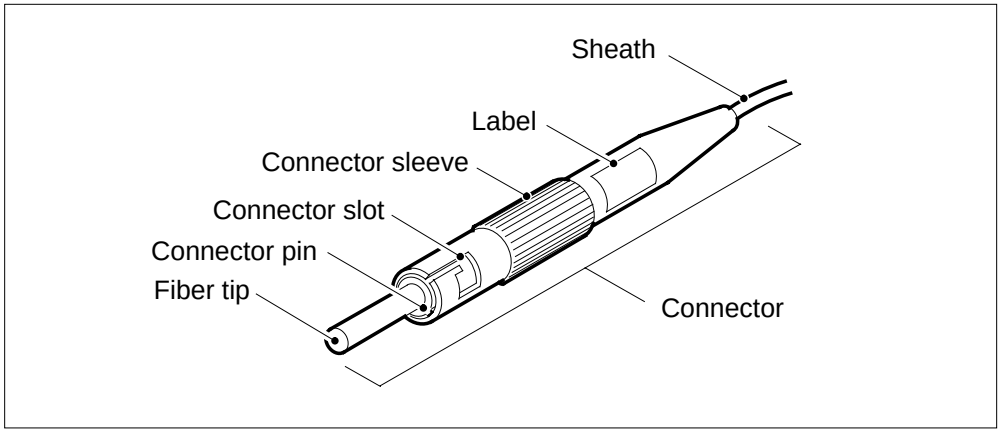

This figure shows the type of connector used to connect fiber to an NT9X40 or NT9X45 paddle board.

Fiber connector and receptacle detail

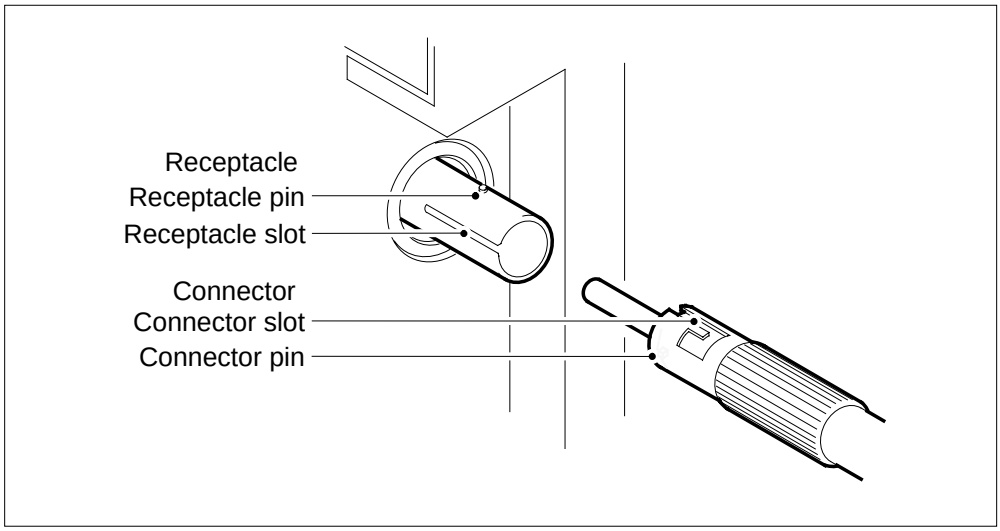

This figure shows the different parts of the connector and receptacle.

Crosspoint and interface cards in a SuperNode SE 32k ENET

Application

Use this procedure to replace the following cards in a SuperNode SE 32k enhanced network (ENET) shelf.

To identify the product engineering code (PEC), suffix, the provisioned shelf or frame of the removed card, refer to the Index. The Index contains a list of cards, shelves, and frames in this card replacement book.

PEC	Suffix	Card name	Shelf or frame name
NT9X35	BA, CA	128K ENET crosspoint card	32k ENET
NT9X40	BA, BB, DA	ENET quad fiber interface paddle board	32k ENET, slots 10 to 16 and 25 to 32
NT9X41	BA	International 16-port DS-30 paddle board	32k ENET
NT9X45	BA	Three DS-512 link and 16 DS-30 port paddle board	32k ENET

Note: To replace an NT9X40 in slot 8, refer to the *System cards in a Supernode SE 32k ENET* procedure in this chapter.

Common procedures

This document contains references to the following:

- *Replacing a card*
- *Verifying load compatibility of SuperNode cards*
- *Cleaning fiber optic components and assemblies*

The instructions in this procedure will indicate when to refer to the common procedures.

Action

This procedure contains a summary flowchart and a list of steps. Use the flowchart to review the procedure. To replace the card, follow the instructions in the steps to perform the procedure.

Crosspoint and interface cards in a SuperNode SE 32k ENET (continued)

Summary of Replacing Crosspoint and interface cards in a SuperNode SE 32k ENET

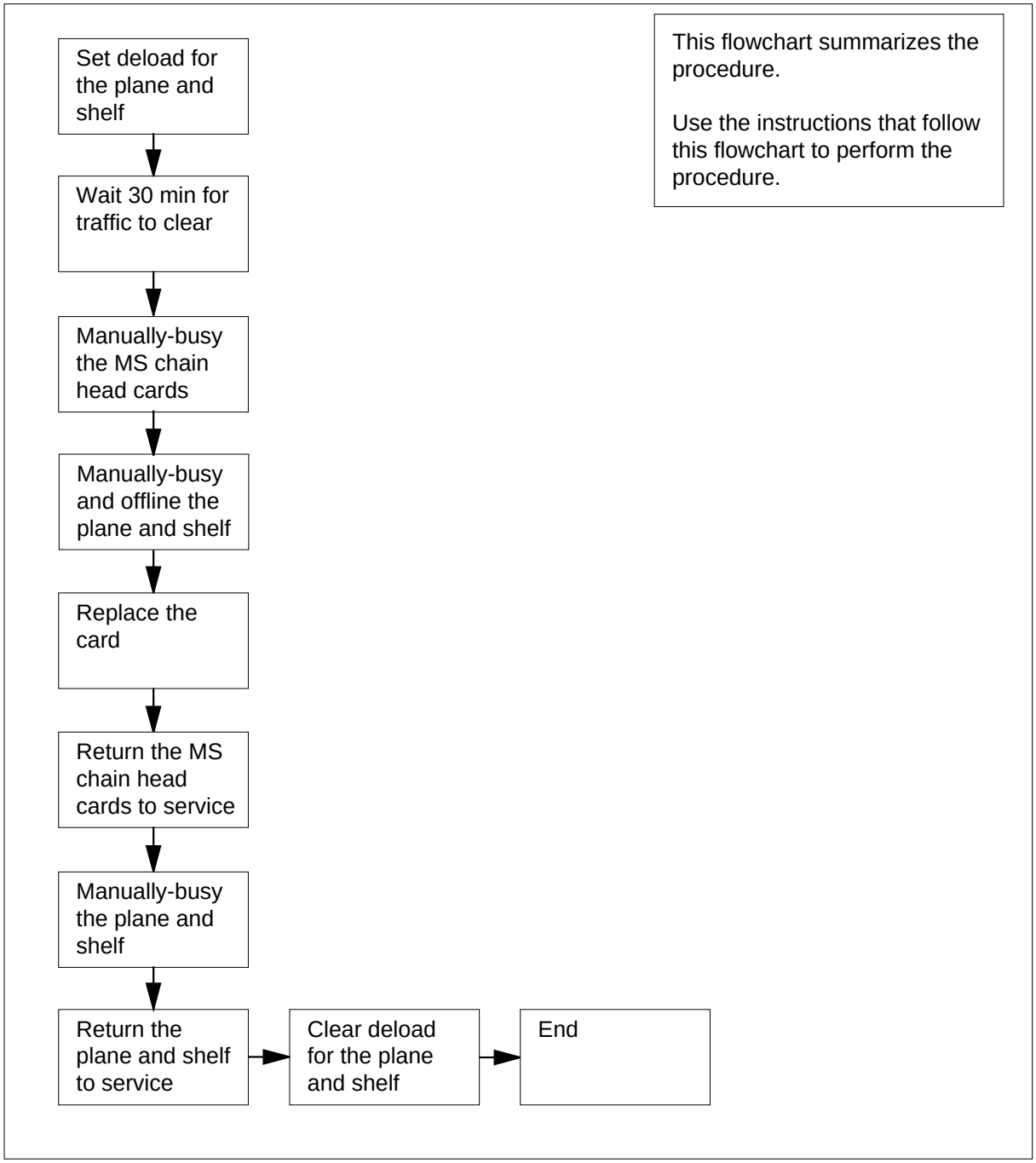

Crosspoint and interface cards in a SuperNode SE 32k ENET (continued)

Replacing Crosspoint and interface cards in a SuperNode SE 32k ENET

At your current location

1 Determine the type and location of the removed card.

If the card	Do
is an NT9X40 card in slot 8	step 2
is other than listed here	step 3

2 To replace the card, refer to the *System cards in a SuperNode SE 32k ENET* procedure in this chapter.

3

> **WARNING**
> **Calls may be dropped**
> This procedure removes an ENET card from service, potentially dropping calls currently in progress. Perform this procedure only if necessary to return an interface or crosspoint card to service. Otherwise, perform this procedure only during periods of low traffic.

Obtain a replacement card. Ensure that the replacement card has the same PEC, including suffix, as the removed card.

Note: For North American switches, NT9X40BA and NT9X40BB are interchangeable and can coexist with the other switches. Only NT9X40BB are available for international switches.

4 Make sure that the replacement card is compatible with the software load. To verify the compatibility, refer to the *Verifying the load compatibility of SuperNode cards* procedure in this NTP. When the procedure is complete, return to this point.

At the MAP terminal

5 To access the NET;SYSTEM level of the MAP display, type

`>MAPCI;MTC;NET;SYSTEM`

and press the Enter key.

Example of a MAP display:

```
SYSTEM
 Shelf    Plane 0                    Plane
  00        I CSLink 1 closed          .
```

6 Determine the state of the plane that contains the card. An indication of the state appears under the Plane headers on the SYSTEM level MAP display.

Crosspoint and interface cards in a SuperNode SE 32k ENET (continued)

In the MAP display example shown in step 5, plane 0 is in-service trouble (`I`) and plane 1 in service.

If the state of the plane	Do
is `T` , tested	step 7
is other than listed here	step 8

7 When the system initiated testing is complete, go to step 6 to evaluate the state of the ENET plane again.

8 To determine if there are deloaded crosspoint cards in the other plane, type

`>DELOAD plane_no 0 QUERY`

and press the Enter key.

where

plane_no
is the ENET plane number (0 or 1) of the mate node

Example of a MAP response:

```
Request to QUERY DELOAD ENET Plane:0 Shelf:00 submitted.
Request to QUERY DELOAD ENET Plane:0 Shelf:00 passed.
            1111111 11122222 22222333
           90123456 78901234 56789012
Plane:0 Shelf:00 ..Y.---- -------- ---....
```

Note: The letter Y under the slot number indicates a deloaded crosspoint card.

If the plane	Do
has deloaded cards	step 57
does not have deloaded cards	step 9

9 To determine if there are deloaded crosspoint cards in the current plane, type

`>DELOAD plane_no 0 QUERY`

and press the Enter key.

where

plane_no
is the ENET plane number (0 or 1)

If the plane	Do
has deloaded cards	step 10
does not have deloaded cards	step 11

Crosspoint and interface cards in a SuperNode SE 32k ENET (continued)

10 Record the plane number and slot number for any deloaded crosspoint cards in the plane. Use this list to ensure that these cards return to the deloaded state when this procedure is complete.

11 On the plane associated with the removed card, to set all crosspoint cards to a deloaded status, type

>DELOAD plane_no 0 SET

and press the Enter key.

where

plane_no
is the ENET plane number (0 or 1)

Example of a MAP response:

```
Request to SET DELOAD ENET Plane:0 Shelf:00 submitted.
Request to SET DELOAD ENET Plane:0 Shelf:00 passed.
```

12 Wait 30 min to allow network traffic on the node to clear.

13 The next action depends on the current state of the ENET plane.

If the ENET plane	Do
is O,offline	step 25
is M, manually-busy	step 15
is other than listed here	step 14

14 To manually busy the current plane, type

>BSY plane_no 0

and press the Enter key.

where

plane_no
is the ENET plane number (0 or 1)

Example of a MAP response:
Request to MAN BUSY ENET Plane:0 Shelf:00 submitted.
Request to MAN BUSY ENET Plane:0 Shelf:00 passed.

If the BSY command	Do
passes	step 15
fails	step 58

15 To set the plane offline, type

>OFFL plane_no 0

and press the Enter key.

Crosspoint and interface cards in a SuperNode SE 32k ENET (continued)

where

plane_no
is the ENET plane number (0 or 1)

Example of a MAP response:

```
Request to OFFL ENET Plane:0 Shelf:00 submitted.
Request to OFFL ENET Plane:0 Shelf:00 passed
```

.

If the OFFL command	Do
passes	step 25
fails	step 58

16 To locate the message switch (MS) chain head card associated with the current ENET plane, type

>TRNSL plane_no 0

and press the Enter key.

where

plane_no
is the ENET plane number (0 or 1)

Example of a MAP response:

```
Request to TRNSL ENET Plane:0 Shelf:00 submitted.
Request to TRNSL ENET Plane:0 Shelf:00 passed.
ENET Plane:0  Shelf:00 :  MS 0 and 1 Card:16 Link:00 Port:000
```

Note: In the example, the number of the chain head card is 16. The link number is 0.

17 Record the number of the chain head card and the link number.

18 To access the MS;SHELF level of the MAP display, type

>MS;SHELF

and press the Enter key.

Example of a MAP display:

```
     Message Switch   Clock   Shelf  0       Inter-MS Link 0 1
MS 0       M          Slave          C                     - -
MS 1       .          M Free         F                     - -

Shelf 0                 1 1 1 1 1 1 1 1 1 1 2 2 2 2 2 2 2
Card  1 2 3 4 5 6 7 8 9 0 1 2 3 4 5 6 7 8 9 0 1 2 3 4 5 6
Chain                                 | |
MS 0  . . . . . - - - - - - - - - - - . . . . . F I
MS 1  . . . . . - - - - - - - - - - - . . . . . F I
```

Crosspoint and interface cards in a SuperNode SE 32k ENET (continued)

19 To post the chain head card, type

>CHAIN card_no

and press the Enter key.

where

card_no
is the card number recorded in step 17

Example of a MAP display:

```
Chain 16  Range  Link   0 1
MS 0   .  16-17  DS512  . .
MS 1   .  16-17  DS512  . .
```

20 To manually busy the link on the chain on MS 0, type

>BSY 0 LINK link_no

and press the Enter key.

where

link_no
is the link number recorded in step 17

Example of a MAP response:

```
Request to MAN BUSY MS: 0 shelf: 0 chain:16 link 0
submitted.
Request to MAN BUSY MS: 0 shelf: 0 chain:16 link 0 passed
.
```

If the BSY command	Do
passes	step 21
fails	step 58

21 To manually busy the link on the chain on MS 1, type

>BSY 1 LINK link_no

and press the Enter key.

where

link_no
is the link number recorded in step 17

If the BSY command	Do
passes	step 22
fails	step 58

Crosspoint and interface cards in a SuperNode SE 32k ENET (continued)

22 To access the ENET SHELF level of the MAP display, type

>NET;SHELF 0

and press the Enter key.

Example of a MAP display:

```
SHELF 01  Slot       1111111 11122222 22222333 333333
            123456 78 90123456 78901234 56789012 345678
 Plane 0    O  O   OO CCCCCCCC -------- CCCCCCCC O  O
 Plane 1    .  .   .. ........ -------- ........ .  .
```

23 To manually busy all cards on the ENET shelf, type

>BSY plane_no ALL

and press the Enter key.

where

plane_no
is the ENET plane number (0 or 1)

Example of a MAP response:

```
Request to MAN BUSY ENET Plane:0 Shelf:00 submitted.
Warning: Card replacement requires front and back bsy/rts
to prevent possible service degradation to peripherals.
Request to MAN BUSY ENET Plane:0 Shelf:01 passed.
```

24 To set all card on the ENET shelf offline, type

>OFFL plane_no ALL

and press the Enter key.

where

plane_no
is the ENET plane number (0 or 1)

Example of a MAP response:

```
Request to OFFLINE ENET Plane:0 Shelf:01 submitted.
Request to OFFLINE ENET Plane:0 Shelf:01 passed.
```

Crosspoint and interface cards in a SuperNode SE 32k ENET (continued)

At the ENET shelf

25

WARNING
Static electricity damage
Wear a wrist strap that connects to the wrist-strap grounding point of a frame supervisory panel (FSP) or a modular supervisory panel (MSP) to handle circuit cards. The wrist strap protects the cards against static electricity damage.

The next action depends on the removed card.

If you	Do
remove an NT9X35	step 26
remove an NT9X41	step 27
remove an NT9X40 or an NT9X45	step c

26 To replace the card, refer to the the *Replacing a card* procedure in this NTP. When the procedure is complete, go to step 38.

Note: Make sure that the switches on the replacement card have the same settings as the removed card.

27 Locate the NT9X41 card and disconnect the DS30 connectors.

Note: The DS30 connectors appear in the figure on the next page.

a Loosen the connector retaining screws.

b Unplug the connectors.

Crosspoint and interface cards in a SuperNode SE 32k ENET (continued)

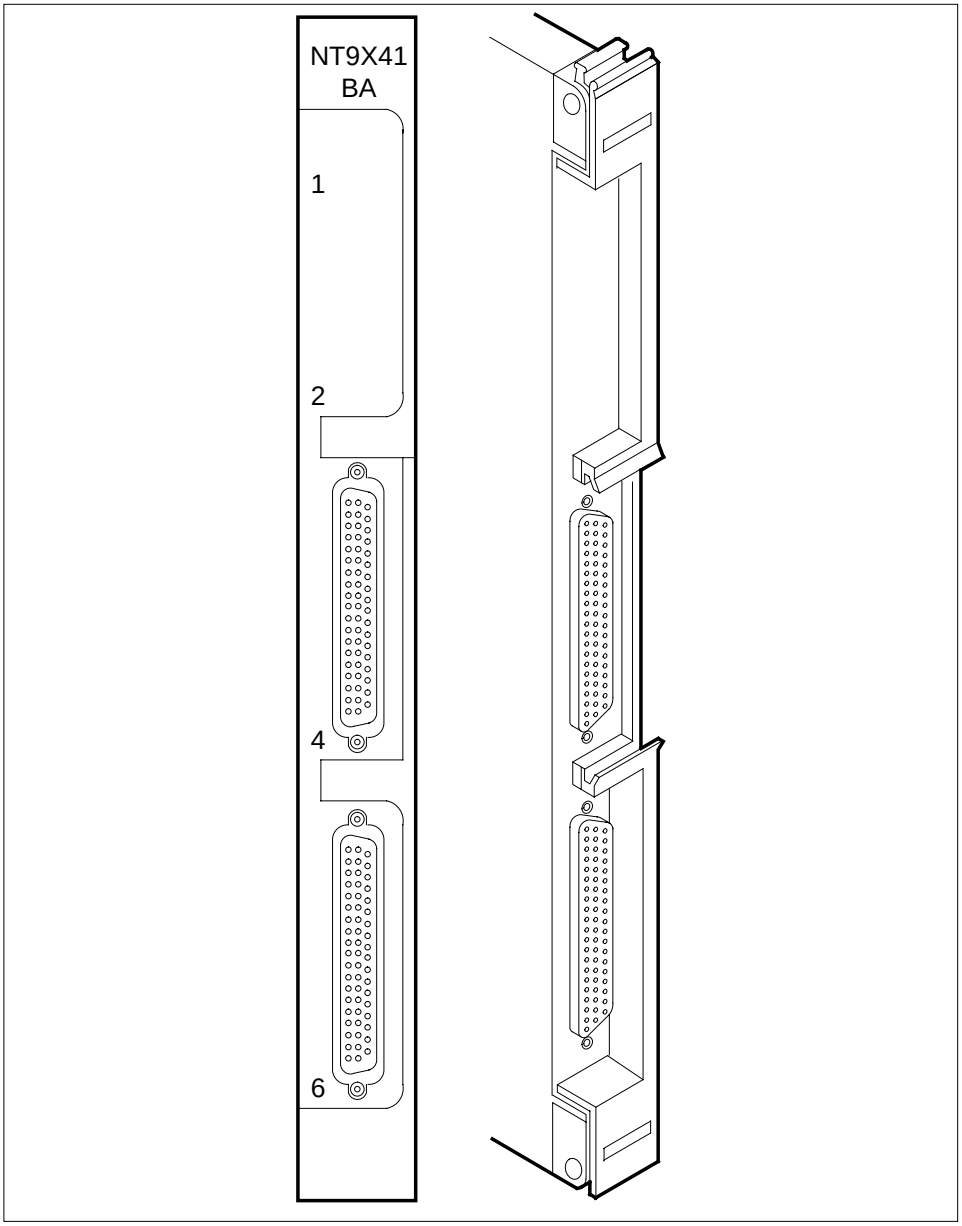

28 To replace the card, refer to the *Replacing a card* procedure in this NTP. When the procedure is complete, return to this point.

29 Reconnect the DS30 connectors.

a Plug the connectors into the card.

b Tighten the connector retaining screws.

Go to step 38.

Crosspoint and interface cards in a SuperNode SE 32k ENET (continued)

30

ATTENTION

Identify connector zone numbers correctly. To identify zone numbers refer to figure "NT9X40BA/BB connector zone numbers", at the end of this procedure, for the NT9X40. Refer to figure "NT9X45BA connector zone numebrs" for the NT9X45 for the zone numbers. Illustrations of fiber connector components for these cards are provided in figures "Fiber connector detail" and "Fiber connector and receptacle detail".

Make sure that the plane and shelf identification of the ENET node and the slot of the interface card are correct. Proceed to disconnect the fiber cables.

Check each cable for a label that contains all of the correct information. If the information is not present, create a label and attach the label to the cable. This label provides the necessary information for correctly reconnecting the fiber cables to the card. A label must include the following information:

- the ENET shelf number
- plane number
- slot number
- link number and signal type
- transmit or receive

Example of a label:

ENCO	00	39
10R	04	17T
LTE	000	18
22R	RX	

Label field descriptions

ENC0
ENET plane (0 or 1)

00
cabinet number

39
ENET shelf from the base mounting position number

10R
slot number and position (R for rear, or F for front)

04
zone number

17T
link number and the signal type (T for transmit, R for receive)

Crosspoint and interface cards in a SuperNode SE 32k ENET (continued)

LTE
PM where the cable terminated

000
PM frame number

18
PM shelf from the base mounting position number

22R
slot number and position (R for rear, or F for front)

RX
signal type at the PM end (RX for receive or TX for transmit)

31

DANGER
Do not contaminate the fiber tip surface
Do not touch the tip of the fiber. Dirt or oil from the skin transferred to the fiber tip surface degrades fiber performance.

DANGER
Damage to the fiber cable
Exercise care in handling fiber cables. Do not crimp fiber cables or bend fiber cables to a radius of less than 3 cm (1.180 in.).

Disconnect the transmit and receive connectors for each fiber cable.

Note: Place dust caps on the ends of the connectors as you disconnect them.

a Grasp the sleeve with two fingers and slowly push the sleeve toward the frame.

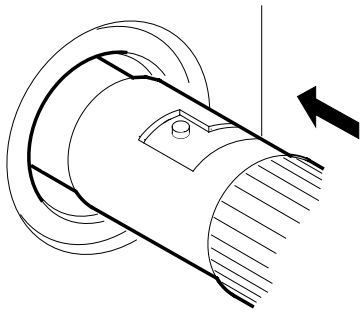

Crosspoint and interface cards in a SuperNode SE 32k ENET (continued)

b Turn the connector counter clockwise and the connector pin is in the position shown at the right.

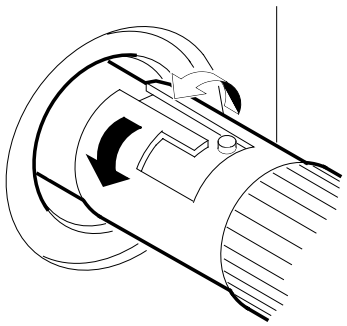

c Slowly pull the connector away from the frame.

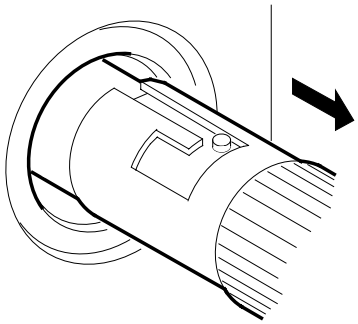

Note: Perform the procedure, *Cleaning fiber optic components and assemblies* in this NTP.

32 The next action depends on the replaced card.

If you	Do
replace an NT9X45	step 33
replace an NT9X40	step 34

33 Disconnect the DS30 connectors.

a Loosen the connector retaining screws.

b Unplug the connectors.

34 To replace the card, refer to the *Replacing a card* procedure in this NTP. When the procedure is complete, return to this point.

Note: Make sure that the switches on the replacement card have the same settings as the removed card.

Crosspoint and interface cards in a SuperNode SE 32k ENET (continued)

35 Remove the dust caps on the transmit and receive connectors as you reconnect them to the new card.

Reconnect the transmit and receive connectors for each fiber cable.

a Align the connector pin and slot with the receptacle slot and pin.

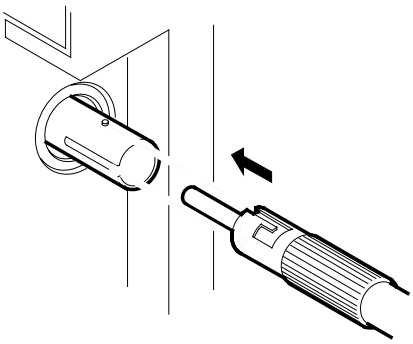

b Slowly slide the connector into the receptacle.

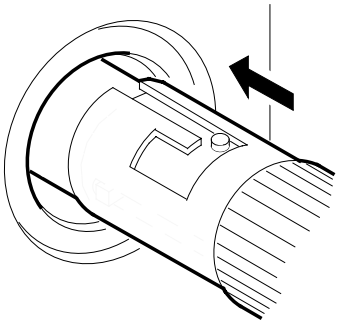

c Turn the connector clockwise to lock the connector in place.

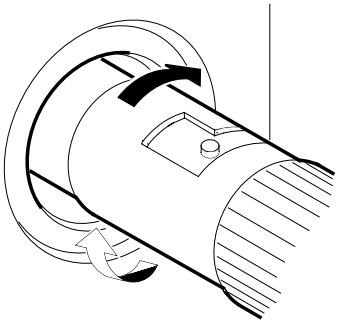

Crosspoint and interface cards in a SuperNode SE 32k ENET (continued)

d Release the connector. The following figure shows the final connector position.

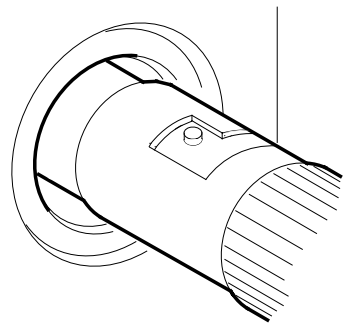

36 The next action depends on the removed card..

If you	Do
remove an NT9X45 card	step 37
remove an NT9X40 card	step 38

37 Reconnect the DS30 connectors.

a Plug the connectors into the card.

b Tighten the connector retaining screws.

At the MAP terminal

38 To access the Chain level of the MAP display, type

```
>MS;SHELF;CHAIN  card_no
```

and press the Enter key.

where

card_no
is the card number recorded in step 17

39 To return the link on the chain on MS 0 to service, type

```
>RTS  0  LINK  link_no
```

and press the Enter key.

where

link_no
is the link number recorded in step 17

Example of a MAP response:

Crosspoint and interface cards in a SuperNode SE 32k ENET (continued)

```
Request to RTS MS: 0 shelf: 0 chain:16 submitted.
Request to RTS MS: 0 shelf: 0 chain:16 passed.
```

If the RTS command	Do
passes	step 40
fails	step 58

40 To return the link on the chain on MS 1 to service, type

>RTS 1 LINK link_no

and press the Enter key.

where

link_no
is the link number recorded in step 17

If the RTS command	Do
passes	step 41
fails	step 58

41 To access the NET;SYSTEM level of the MAP display, type

>NET;SYSTEM

and press the Enter key.

42 To manually busy the current plane, type

>BSY plane_no 0

and press the Enter key.

where

plane_no
is the ENET plane number (0 or 1)

If the BSY command	Do
passes	step 43
fails	step 58

43 To return the plane to service, type

>RTS plane_no 0

and press the Enter key.

where

plane_no
is the ENET plane number (0 or 1)

Crosspoint and interface cards in a SuperNode SE 32k ENET (continued)

Example of a MAP response:

```
Request to RTS ENET Plane:0 Shelf:00 submitted.
Request to RTS ENET Plane:0 Shelf:00 passed.
There are no suspect cards
```

If the RTS command	Do
passes	step 44
fails	step 58

44 To access the ENET SHELF level of the MAP display, type

>SHELF 0

and press the Enter key.

45 To manually busy all cards in the ENET plane, type

>BSY plane_no ALL

and press the Enter key.

where

plane_no
is the ENET plane number (0 or 1)

46 To return all cards in the ENET plane to service, type

>RTS plane_no ALL

and press the Enter key.

where

plane_no
is the ENET plane number (0 or 1)

Example of a MAP response:

```
Request to RTS ENET Plane:0 Shelf:01 submitted.
Request to RTs ENET Plane:0 Shelf:01 passed.
```

If the RTS command	Do
passes	step 49
fails	step 47

47 The replacement card has faults. Obtain another replacement card.

48 To access the ENET system level of the MAP display, type

>SYSTEM

and press the Enter key.

Crosspoint and interface cards in a SuperNode SE 32k ENET (continued)

Go to step 14.

49 To access the ENET system level of the MAP display, type

>SYSTEM

and press the Enter key.

50 To clear the deload condition on all crosspoint cards in the plane, type

>DELOAD plane_no 0 CLEAR

and press the Enter key.

where

plane_no
is the ENET plane number (0 or 1)

Example of a MAP response:

```
Request to CLEAR DELOAD ENET Plane:0 Shelf:00 submitted.
Request to CLEAR DELOAD ENET Plane:0 Shelf:00 passed.
```

51 The next action depends on if the deloaded cards appear in the list from step 10.

If	Do
cards are listed	step 52
cards are not listed	step 55

52 To access the SHELF level of the MAP display, type

>SHELF 0

and press the Enter key.

53 To set the first card on the list to deloaded state, type

>DELOAD plane_no slot_no SET

and press the Enter key.

where

plane_no
is the ENET plane number (0 or 1)

slot_no
is the slot number (9 to 32)

If all the cards on the list	Do
are not set to the deloaded state	step 54
are set to the deloaded state	step 55

54 Repeat step 53 for the next card on the list.

Crosspoint and interface cards in a SuperNode SE 32k ENET (continued)

55 The next action depends on the reason for this procedure.

If	Do
a maintenance procedure directed you to this procedure	step 56
you were not directed to this procedure from a maintenance procedure	step 59

56 Return to the maintenance procedure and continue as directed.

57 This procedure contains the instructions to deload a node. When the mate node has deloaded cards, do not continue this procedure, except under special conditions. Consult office personnel or your next level of support and continue as directed.

58 For additional help, contact the personnel responsible for the next level of support.

59 This procedure is complete.

Crosspoint and interface cards in a SuperNode SE 32k ENET (continued)

NT9X40BA/BB connector zone numbers

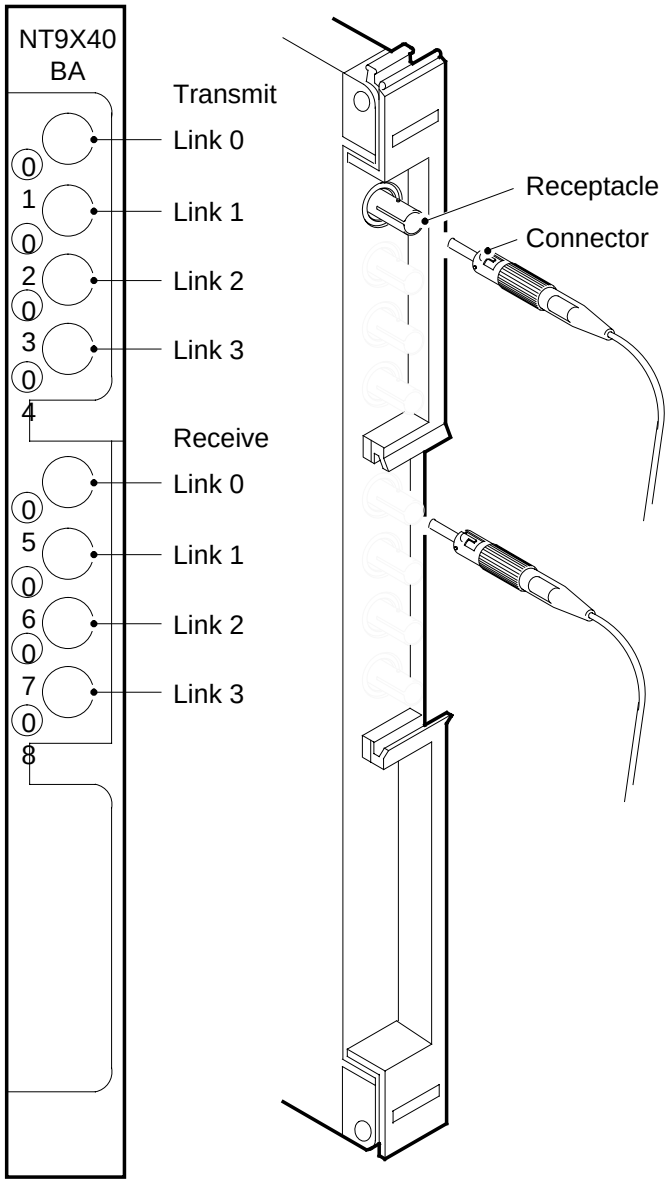

The figure correlates the zone numbers from1 to 8, that appear on the face of the card to the link numbers that appear on the MAP display for the NT9X40BA or NT9X40BB interface card. Note that only fiber connections are shown. Notice the zone designations for transmit and receive.

Crosspoint and interface cards in a SuperNode SE 32k ENET (continued)

NT9X45BA connector zone numbers

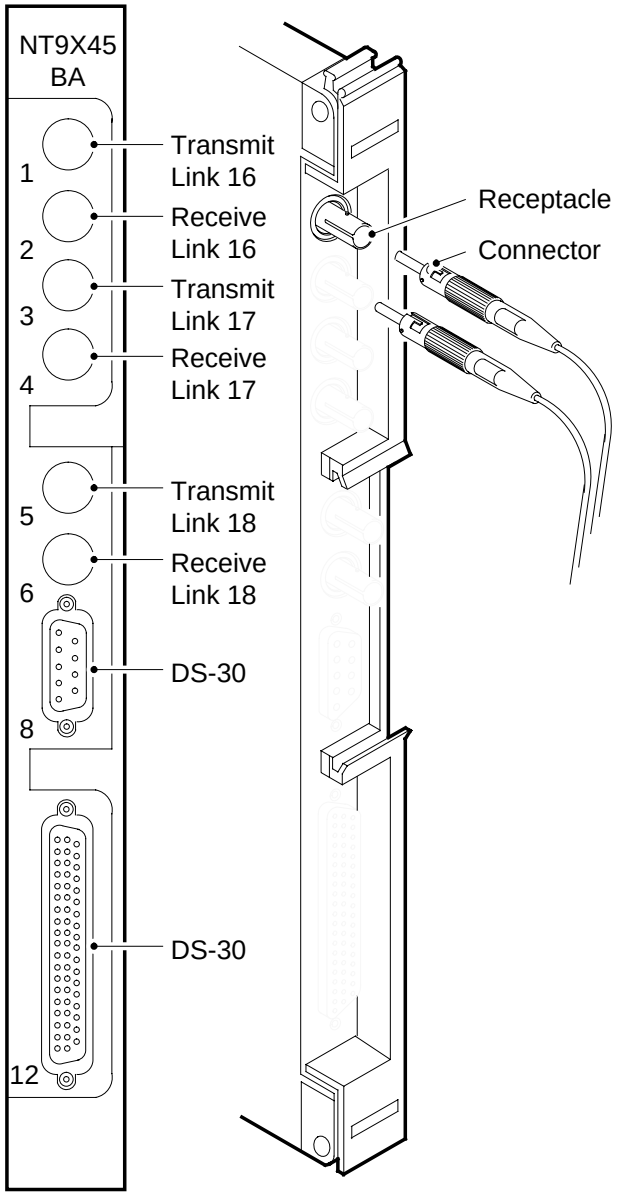

The figure correlates the zone numbers from 1 to 12, that appear on the face of the card to the link numbers that appear on the MAP display for the NT9X45BA interface card. Note that only fiber connections are shown. Notice the zone designations for transmit and receive.

Crosspoint and interface cards in a SuperNode SE 32k ENET (end)

Fiber connector detail

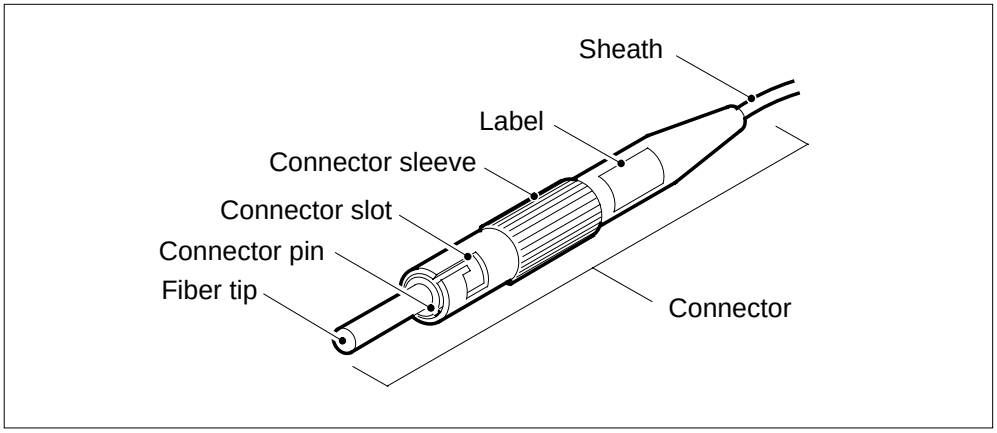

This figure shows the type of connector used for fiber connections to an NT9X40 or NT9X45 paddle board.

Fiber connector and receptacle detail

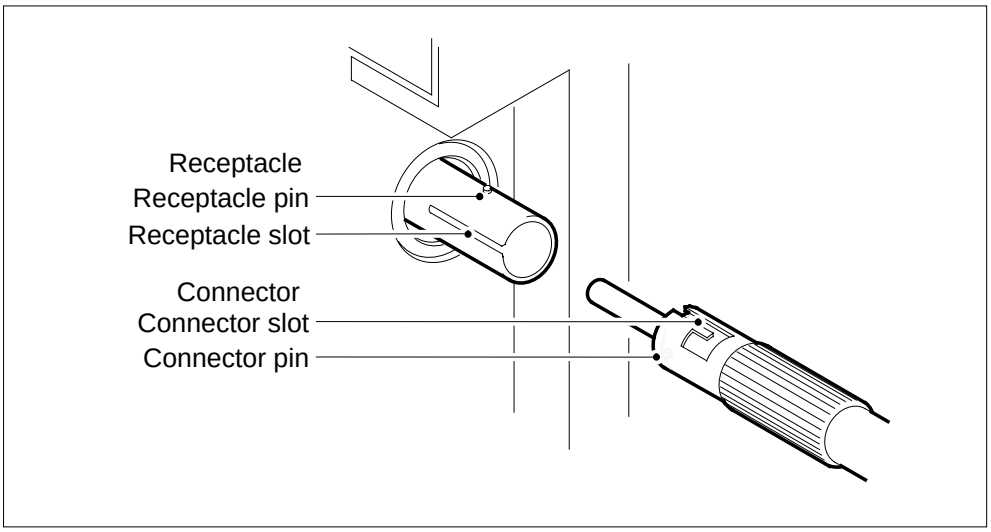

This figure shows the different parts of the connector and receptacle.

Power converter cards in a SuperNode SE 16k ENET

Application

Use this procedure to replace the following cards in a SuperNode SE (SNSE) 16k enhanced network (ENET).

PEC	Suffix	Card name	Shelf or frame name
NT9X30	AA, AC	+ 5V 86-A power converter card	Enhanced network and interface (ENI)
NT9X31	AA, AB	- 5V 20-A power converter card	ENI

Note: You can not replace NT9X30AA with NT9X30AC, nor can you replace NT9X31AA with NT9X31AB.

If you cannot identify the product engineering code (PEC), suffix, or provisioned shelf or frame for the card to replace, refer to the Index. The Index provides a list of the cards, shelves, and frames documented in this card replacement book.

Refer to the “Index", if you cannot identify the following features for the card that you want to replace:

- product engineering code (PEC)
- PEC suffix
- provisioned shelf
- provisioned frame

Common procedures

This procedure refers to the following common procedures:

- *Activating CCS7 links*
- *Deactivating CCS7 links*
- *Loading a PM*
- *Replacing a card*
- *Verifying load compatibility of SuperNode cards*

Do not go to the common procedure unless the step-action procedure directs you.

Power converter cards in a SuperNode SE 16k ENET (continued)

Action

This procedure contains a summary flowchart and a list of steps. Use the flowchart to review the procedure. Follow the steps to perform the procedure.

Power converter cards in a SuperNode SE 16k ENET (continued)

Summary of replacing Power converter cards in a SuperNode SE 16k ENET

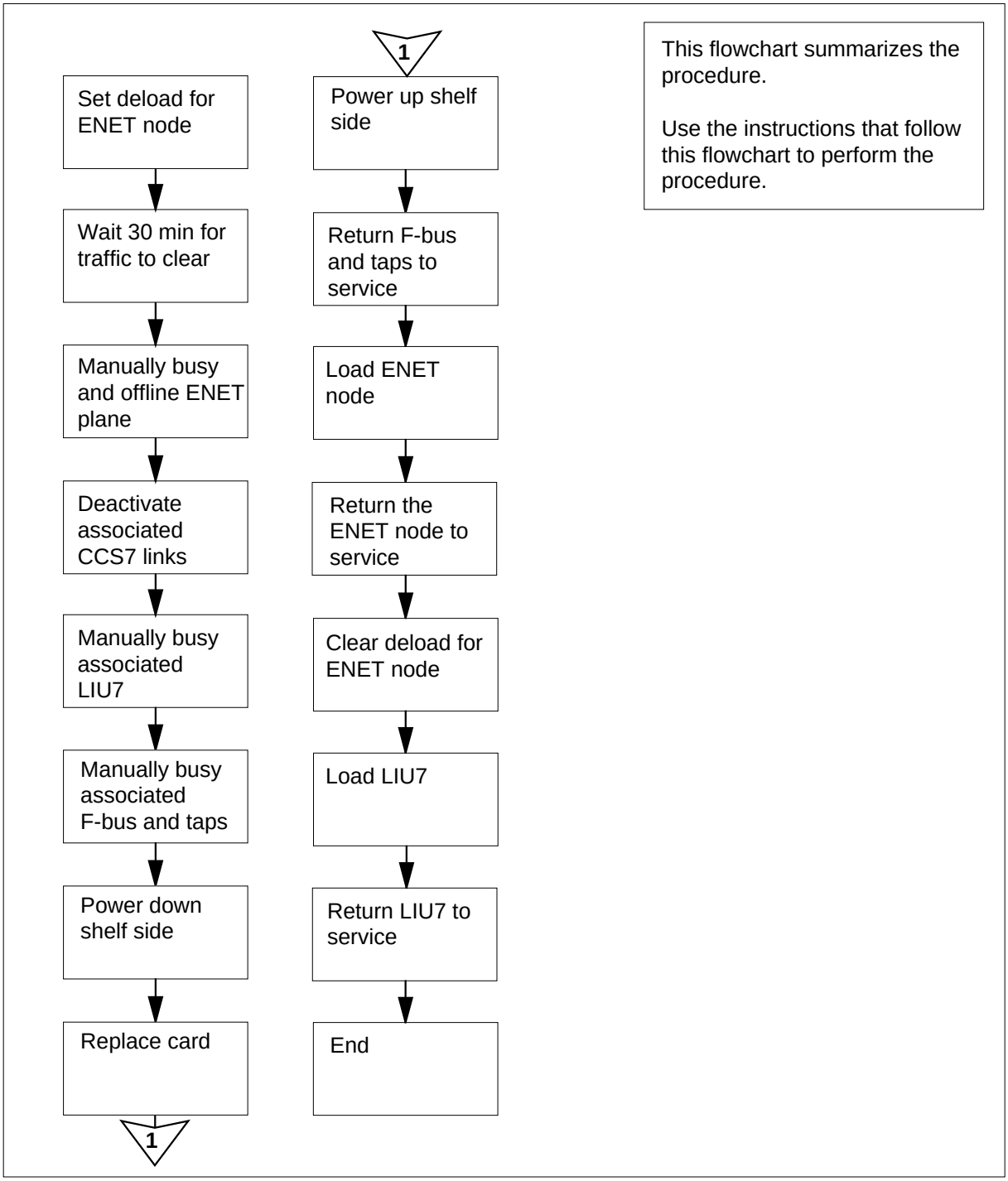

Power converter cards in a SuperNode SE 16k ENET (continued)

Replacing Power converter cards in a SuperNode SE 16k ENET

At the MAP terminal

1

> **WARNING**
> **System can drop calls**
> This procedure removes an ENET shelf from service, which can cause the system to drop calls now in progress. Perform this procedure if you need to return system cards to service. If you do not need to return system cards to service, perform this procedure during periods of low traffic.

Obtain a replacement card. Make sure that the replacement card and the card that you remove have the same PEC and PEC suffix.

2 To make sure that the replacement card is compatible with the software load, perform the procedure *Verifying load compatibility of SuperNode cards*. The procedure *Verifying load compatibility of SuperNode cards* appears in this NTP. Complete the procedure and return to this point.

3 To access the NET;SYSTEM level of the MAP display, type

`>MAPCI;MTC;NET;SYSTEM`

and press the Enter key.

Example of a MAP display:

```
SYSTEM
 Shelf    Plane 0                  Plane 1
   00     I CSLink 1 closed        .
```

4 Check the state of the ENET plane that contains the card you replace. The state appears under the Plane headers on the SYSTEM level MAP display. In the MAP display example in step 3, plane 0 is in-service trouble (`I`). The other plane is in service.

If the state of the ENET plane	Do
is T (being tested)	step 5
is other than listed here	step 6

5 Wait for the system to complete system-initiated testing. Go to step 4 to evaluate the state of the ENET plane.

Power converter cards in a SuperNode SE 16k ENET (continued)

6 To determine if deloaded crosspoint cards are in the other plane of the ENET, type

>DELOAD plane_no 0 QUERY

and press the Enter key.

where

plane_no
is the ENET plane number (0 or 1) for the mate node

Example of a MAP response:

```
Request to QUERY DELOAD ENET Plane:0 Shelf:00  submitted.
Request to QUERY DELOAD ENET Plane:0 Shelf:00 passed.

                1111111 111
                 0123456 789
Plane:0 Shelf:00 .Y.---- ---
```

Note: The letter Y under the slot number indicates a deloaded crosspoint card.

If the other ENET plane	Do
has deloaded cards	step 87
does not have deloaded cards	step 7

7 To determine if deloaded crosspoint cards are in the ENET plane, type

>DELOAD plane_no 0 QUERY

and press the Enter key.

where

plane_no
is the number of the ENET plane (0 or 1) that contains the card

If the ENET plane	Do
has deloaded cards	step 8
does not have deloaded cards	step 9

8 Record the plane number and slot number for any deloaded crosspoint cards in the node. Use the list to make sure that these cards are returned to the deloaded state when you complete this procedure.

9 To set all crosspoint cards for the ENET plane that contains the card that you replace to a deloaded state, type

>DELOAD plane_no 0 SET

and press the Enter key.

where

Power converter cards in a SuperNode SE 16k ENET (continued)

plane_no
is the ENET plane number (0 or 1)

Example of a MAP response:

```
Request to SET DELOAD ENET Plane:0 Shelf:00  submitted.
Request to SET DELOAD ENET Plane:0 Shelf:00  passed.
```

10 Wait 30 min to allow network traffic on the ENET plane to clear.

11 The next step depends on the state of the ENET plane that contains the card you replace.

If the ENET plane	Do
is O (offline)	step 16
is M (manual busy)	step 14
is other than listed here	step 12

12 To manually busy the ENET plane, type

>BSY plane_no 0

and press the Enter key.

where

plane_no
is the number of the ENET plane (0 or 1) that contains the card

Example of a MAP response:

```
Request to MAN BUSY ENET Plane:0 Shelf:00  submitted.
Request to MAN BUSY ENET Plane:0 Shelf:00  passed.
```

If the response	Do
requests confirmation	step 13
indicates the BSY command passed	step 14

13 To confirm the command, type

>YES

and press the Enter key.

If the BSY command	Do
passed	step 14
failed	step 90

Power converter cards in a SuperNode SE 16k ENET (continued)

14 To offline the ENET plane, type

>OFFL plane_no 0

and press the Enter key.

where

plane_no
is the number of the ENET plane (0 or 1) that contains the card

Example of a MAP response:

```
WARNING: A power down of ENET plane:1 shelf:00 may affect
LIU components.
Please confirm (“YES", “Y", “NO", or “N"):
```

If the response	Do
requests confirmation	step 15
indicates the OFFL the command passed	step 16

15 To confirm the command, type

>YES

and press the Enter key.

Example of a MAP response:

```
Request to OFFLINE ENET Plane:1 Shelf:00 submitted.
Request to OFFLINE ENET Plane:1 Shelf:00 passed.
```

If the OFFL command	Do
passed	step 16
failed	step 90

16 To locate the message switch (MS) chain head card that associates with the ENET plane, type

>TRNSL plane_no 0

and press the Enter key.

where

plane_no
is the ENET plane number (0 or 1)

Example of a MAP response:

Power converter cards in a SuperNode SE 16k ENET (continued)

```
Request to TRNSL ENET Plane:0 Shelf:00 submitted.
Requestto TRNSL ENET Plane:0 Shelf:00 passed.
ENET Plane:0 Shelf:00 :  MS 0 and 1 Card:05 Link:00 Port:000
```

Note: In the example, the number of the chain head card is 5. The link number is 0.

17 Record the number of the chain head card and the link number.

18 To access the MS;SHELF level of the MAP display, type

>MS;SHELF

and press the Enter key.

Example of a MAP display:

```
   Message Switch   Clock   Shelf  0    Inter-MS Link 0 1
MS 0      .         Slave          .                  . .
MS 1      .         M Free         .                  . .


Shelf 0                 1 1 1 1
 Card 1 2 3 4 5 6 7 8 9 0 1 2 3
Chain       |
MS 0  . . . . - - . . . . . .
MS 1  . . . .. - - . . . . . .
```

19 To post the chain head card, type

>CHAIN card_no

and press the Enter key.

where

card_no
is the card number you recorded in step 17

Example of a MAP display:

```
Chain 05  Range  Link   0 1
MS 0   .  05-05  DS512  . .
MS 1   .  05-05  DS512  . .
```

20 To manually busy the link on the chain on MS 0, type

>BSY 0 LINK link_no

and press the Enter key.

where

link_no
is the link number that you recorded in step 17

Example of a MAP response:

Power converter cards in a SuperNode SE 16k ENET (continued)

```
Request to MAN BUSY MS: 0 shelf: 0 chain:16 link 0 submitted.
Request to MAN BUSY MS: 0 shelf: 0 chain:16 link 0 passed.
```

If the BSY command	Do
passed	step 21
failed	step 90

21 To manually busy the link on the chain on MS 1, type

>BSY 1 LINK link_no

and press the Enter key.

where

link_no
is the link number that you recorded in step 17

If the BSY command	Do
passed	step 22
failed	step 90

22 To access the ENET SHELF level of the MAP display, type

>NET;SHELF

and press the Enter key.

Example of a MAP display:

```
ENET     System   Matrix  Shelf 0
   Plane 0 CSLink   Fault         F
   Plane 1 CSLink     .           F

SHELF 00  Power   LIU  ENET-Plane 0 ENET-Plane 1  LIU  Power
                        11  11111111 22  22222222  333  333333
   Slot     123456789  01  23456789 01  23456789  012  345678
          .    .         .F  SSSSSSSS .F  ........       .  .
```

23 To manually busy all crosspoint cards on the shelf side, type

>BSY plane_no ALL

and press the Enter key.

Example of a MAP response:

Power converter cards in a SuperNode SE 16k ENET (continued)

```
WARNING:
      This action will be performed on ALL XPT slots
      in ENET Plane:1 that are MBSY, INSV, OFFL,
      SBSY, or CBSY.
Please confirm ("YES", "Y", "NO", or "N"):
```

24 To confirm the command, type

>YES

and press the Enter key.

Example of a MAP response:

```
Request to MAN BSY ALL ENET Plane:1 Shelf:00 submitted.
Request to MAN BSY ALL ENET Plane:1 Shelf:00 completed.
```

25 To offline all crosspoint cards on the shelf side, type

>OFFL plane_no ALL

and press the Enter key.

where

plane_no
is the ENET plane number (0 or 1)

Example of a MAP response:

```
Request to MAN BSY ALL ENET Plane:1 Shelf:00 submitted.
Request to MAN BSY ALL ENET Plane:1 Shelf:00 completed.
```

26 The next action depends if the ENET shelf has CCS7 link interface units (LIU7).

If the ENET shelf	Do
has LIU7	step 27
does not have LIU7	step 33

27 To access the PM level of the MAP display, type

>MAPCI;MTC;PM

and press the Enter key.

Example of a MAP display:

```
      SysB    ManB    OffL    CBsy    ISTb    InSv
 PM     11       0      11       4      16      38
```

Power converter cards in a SuperNode SE 16k ENET (continued)

28

> **WARNING**
> **Loss of service**
> The following procedure removes an LIU7 from service. Removal of an LIU7 can temporarily interrupt messaging on the associated CCS7 link.

To post one of the LIU7s on the shelf side, type

>POST LIU7 liu_no

and press the Enter key.

where

liu_no
is the number of the LIU7 (0 to 511)

Example of a MAP display:

```
            SysB    ManB    OffL    CBsy    ISTb   InSv
  PM           1       0       2       0       3      6
  LIU7         1       0       0       0       0      3

LIU7   208 InSv       Rsvd
```

29 To deactivate the CCS7 link associated with the LIU7, perform the procedure *Deactivating CCS7 links* in this document. Complete the procedure and return to this point.

30 Determine the state of the LIU7.

Note: The LIU7 state appears on the right of the LIU7 number, as shown in the example MAP display in step 28.

If the state of the LIU7	Do
is SysB, SysB (NA), ISTb, or InSv	step 31
is ManB or ManB (NA)	step 33
is OffL	step 88
Rsvd	step 90

31 To manually busy the LIU7, type

>BSY FORCE

Power converter cards in a SuperNode SE 16k ENET (continued)

and press the Enter key.

If	Do
the MAP display prompts you to confirm the command	step 32
the command passed	step 33

32 To confirm the command, type

>YES

and press the Enter key.

33 To access the MS level of the MAP display, type

>MAPCI;MTC;MS

and press the Enter key.

```
    Message Switch  Clock   Shelf 0 Inter-MS Link 0 1
MS 0    .           M Free                         . .
MS 1    .           Slave       .                  . .
```

34 Determine the state of the MS that controls the mate F-bus.

Note: F-bus 0 is the mate F-bus for a card in slot 32F, 32R, or 30R. MS 0 controls F-bus 0. F-bus 1 is the mate F-bus for a card in slot 7F, 7R, or 8R. MS 1 controls F-bus 1.

If the MS that controls mate F-bus	Do
is in service or in-service trouble	step 36
is other than listed here	step 35

35 To return the MS to service, perform the correct MS alarm clearing procedure in *Alarm and Performance Monitoring Procedures*. Complete the procedure and return to this point.

36 To access the SHELF level of the MAP display, type

>SHELF

and press the Enter key.

37 To access the F-bus level of the MAP display, type

>CARD 12

and press the Enter key.

Example of a MAP display:

Power converter cards in a SuperNode SE 16k ENET (continued)

```
Shelf 0                 1 1 1 1
Card  1 2 3 4 5 6 7 8 9 0 1 2 3
Chain         |
MS 0  . . . . . – – . . . . . .
MS 1  . . . . . – – . . . . . .

Card 12          FBus Tap: 0           11 12   16   20
MS 0  .            .       .            . .... .... ....
MS 1  .            .       .            . .... .... ....

CARD:
```

Note 1: A dot (.) under the F-bus header indicates the F-bus is in service. An S indicates the F-bus is system busy. An M indicates the F-bus is manual busy. An I indicates the F-bus is in-service trouble. An O indicates the F-bus is offline.

Note 2: Under the F-bus tap numbers, different characters indicate different states. The letter C indicates that the F-bus is manual busy or the MS or MS port that controls the F-bus tap is system or manual busy. An S indicates the F-bus tap is system busy. A dot indicates the F-bus tap is in service. An M indicates the F-bus tap is manual busy. An I indicates the F-bus tap is in-service trouble. A dash (-) indicates the F-bus tap is offline.

38 Determine the state of the mate F-bus and the mate F-bus taps.

Note: F-bus 0 is the mate F-bus associated with a card in slot 30R, 32R, or 32F. MS-0 controls F-bus 0. F-bus 1 is the mate associated with a card in slot 7R, 8R, or 7F. MS 1 controls F-bus 1.

If	Do
the state of the F-bus is `InSv` and all F-bus taps are `.` (dot)	step 39
the states are other than listed here	step 89

39

WARNING
Potential loss of service
Make sure that the mate F-bus and F-bus taps are in service before you manually busy the F-bus that associates with the card you replace. If you manually busy the F-bus while the mates are out of service, you isolate the node on the other side of the shelf.

To manually busy the F-bus that associates with the card you replace, type

>BSY ms_no FBUS

Power converter cards in a SuperNode SE 16k ENET (continued)

and press the Enter key.

where

ms_no
is the number of the MS (0 or 1) that controls the F-bus

Note: F-bus 0 associates with a card in slot 1 or 4. MS 0 controls F-bus 0. F-bus 1 associates with a card in slot 33 or 36. MS 1 controls F-bus 1.

Example of a MAP response:

```
Request MAN BSY MS: 0 shelf 0 card:12 port 0
FBus requires confirmation because
the following NIUs may be active on this bus...
NIU 001 unit 0
NIU 001 unit 1
Please confirm("YES", "Y", "NO", or "N")
```

If the response	Do
indicates the BSY command passed	step 41
requests confirmation	step 40

40 To confirm the command, type

>YES

and press the Enter key.

Example of a MAP response:

```
Request MAN BSY MS: 0 shelf 0 card:12 port 0FBus submitted
Request MAN BSY MS: 0 shelf 0 card:12 port 0FBus passed
```

41 To manually busy the mate F-bus tap that associates with the card you replace, type

>BSY ms_no TAP tap_no

and press the Enter key.

where

ms_no
is the number of the MS (0 or 1) that controls the mate F-bus

tap_no
is 0 if you replace a card in slots 1 or 4is 11 if you replace a card in slots 33 or 36

Note: F-bus 0 is the mate F-bus for a card in slot 33 or 36. MS 0 controls F-bus 0. F-bus 1 is the mate F-bus for a card in slot 1 or 4. MS 1 controls F-bus 1.

Example of a MAP display:

Power converter cards in a SuperNode SE 16k ENET (continued)

```
Warning, P-side nodes may be isolated.
Please confirm ("YES", "Y", "NO", or "N"):
```

42 To confirm the command, type

>YES

and press the Enter key.

Example of a MAP response:

```
Request to MAN BSY MS: 0 shelf: 0 card:12 tap: 0 submitted.
Request to MAN BSY MS: 0 shelf: 0 card:12 tap: 0 passed.
```

At the ENET shelf

43

> **WARNING**
> **Static electricity damage**
> Wear a wrist strap that connects to the wrist-strap grounding point of a frame supervisory panel (FSP) or a modular supervisory panel (MSP) to handle circuit cards. The wrist strap protects the cards against static electricity damage.

Power down the NT9X31 card that associates with the ENET shelf side. To power down the card, press down and release the power switch on the faceplate of the card.

Note: The CONVERTER OFF LED turns on when the converter powers down.

If the CONVERTER OFF LED	Do
is lit	step 44
is not lit	step 90

44 Power down the NT9X30 card that associates with the ENET shelf side you are working on. To power down the card, press down and release the power switch on the faceplate of the card.

Note: The CONVERTER OFF LED turns on when the converter powers down.

If the CONVERTER OFF LED	Do
is lit	step 45
is not lit	step 90

Power converter cards in a SuperNode SE 16k ENET (continued)

45

> **WARNING**
> **Static electricity damage**
> Wear a wrist strap that connects to the wrist-strap grounding point of a frame supervisory panel (FSP) or a modular supervisory panel (MSP) to handle circuit cards. The wrist strap protects the cards against static electricity damage.

To replace the card, perform the procedure *Replacing a card* in this NTP. Complete the procedure and return to this point.

Note 1: Make sure that the handle of the PWR switch on the replacement power converter is in the OFF position.

Note 2: If the card that you replace has switches, make sure that the switches on the replacement card have the same settings.

46 To power up the NT9X30 card, press up and release the power switch on the faceplate of the card.

Note: The CONVERTER OFF LED turns off when the converter powers up.

If the CONVERTER OFF LED	Do
is not lit	step 47
is lit	step 90

47 To power up the NT9X31 card, press up and release the power switch on the faceplate of the card.

Note: The CONVERTER OFF LED turns off when the converter powers up.

If the CONVERTER OFF LED	Do
is not lit	step 48
is lit	step 90

At the MAP terminal

48 To make sure that you are at the MS;SHELF level of the MAP display, type

```
>MS;SHELF
```

and press the Enter key.

49 To post the chain head card that you posted in step 19, type

```
>CHAIN  card_no
```

and press the Enter key.

Power converter cards in a SuperNode SE 16k ENET (continued)

where

card_no
is the card number that you recorded in step 17

50 To return the link on the chain on MS 0 to service, type

>RTS 0 LINK link_no

and press the Enter key.

where

link_no
is the link number that you recorded in step 17

Example of a MAP response:

```
Request to RTS MS: 0 shelf: 0 chain:16 link 0 submitted.
Request to RTS MS: 0 shelf: 0 chain:16 link 0 passed.
```

If the RTS command	Do
passed	step 51
failed	step 90

51 To return the link on the chain on MS 1 to service, type

>RTS 1 LINK link_no

and press the Enter key.

where

link_no
is the link number that you recorded in step 17

If the RTS command	Do
passed	step 52
failed	step 90

52 To access the F-bus level of the MAP display, type

>CARD 12

and press the Enter key.

53 To return the manual busy F-bus to service, type

>RTS ms_no FBUS

and press the Enter key.

where

ms_no
is 0 if you replaced a card in slots 1 or 4is 1 if you replaced a card in slots 33 or 36

Power converter cards in a SuperNode SE 16k ENET (continued)

54 To return the tap on the mate F-bus to service, type

>RTS ms_no TAP tap_no

and press the Enter key.

where

ms_no
is 0 if you replaced a card in slots 1 or 4is 1 if you replaced a card in slots 33 or 36

tap_no
is 0 if you replaced a card in slots 1 or 4is 11 if you replaced a card in slots 33 or 36

Example of a MAP response:

```
Request to RTS MS: 0 shelf: 0 card:12 tap: 0  submitted.
Request to RTS MS: 0 shelf: 0 card:12 tap: 0  passed.
```

55 To access the NET;SYSTEM level of the MAP display, type

>NET;SYSTEM

and press the Enter key.

56 To manually busy the ENET node, type

>BSY plane_no 0

and press the Enter key.

where

plane_no
is the ENET plane number (0 or 1)

Example of a MAP response:

```
Request to MAN BUSY ENET Plane:1 Shelf:00 submitted.
Request to MAN BUSY ENET Plane:1 Shelf:00 passed.
```

If the response	Do
requests confirmation	step 57
indicates that the BSY command passed	step 58

57 To confirm the command, type

>YES

and press the Enter key.

If the BSY command	Do
passed	step 58

Power converter cards in a SuperNode SE 16k ENET (continued)

If the BSY command	Do
failed	step 90

58 The next action depends on the location of the load file.

If the load file	Do
is as specified in tables PMLOADS and ENINV	step 59
is different from the file specified in tables PM-LOADS and ENINV	step 60

59 To load the ENET node, type

>LOADEN plane_no 0

and press the Enter key.

where

plane_no
is the ENET plane number (0 or 1)

Example of a MAP response:

```
WARNING
Any software load in the ENET will be destroyed.
Please confirm ("YES" or "NO"):
```

Go to step 66.

60 To access the CI level of the MAP display, type

>QUIT ALL

and press the Enter key.

61 To access the disk utility, type

>DISKUT

and press the Enter key.

Example of a MAP response:

```
 Disk utility is now active.DISKUT:
```

62 To list the contents for the volume that contains the loadfile, type

>LISTFILE vol_name

and press the Enter key.

where

vol_name
is the name of the volume that contains the ENET load file

Example of a MAP response:

Power converter cards in a SuperNode SE 16k ENET (continued)

```
File information for volume S00DVOL1:
{NOTE:  1 BLOCK = 512 BYTES }
-----------------------------------------------------------------------
    LAST FILE O R I O       FILE     NUM OF   MAX    FILE NAME
  MODIFY CODE R E T P       SIZE    RECORDS   REC
    DATE      G C O E         IN         IN   LEN
                 C N     BLOCKS        FILE
-----------------------------------------------------------------------
  760128      0 O F          277       3219    44 EDRMAC07
  941101      0 I F Y       9494       4747  1020 RAPC03AW_1101_MS
  760104      0 O V          651        162  2048 MPC402BX
  760104      0 O F           63        424    76 TDCMPA01
  760104      0 O F           37        249    76 TTMNA01
  941101      0 I F Y     202934     101467  1020 RAPC03AW_1101_CM
  941025      0 I F         9494       4747  1020 RBCS35CV_1025_MS
  941025      0 I F       242454     121227  1020 RBCS35CV_1025_CM
  940426      0 O F          784        392  1024 MPCX33AB
  930427      0 O F          314       2006    80 MTULI01
```

63 To quit the disk utility, type

>QUIT

and press the Enter key.

64 To access the NET;SYSTEM level of the MAP display, type

>MAPCI;MTC;NET;SYSTEM

and press the Enter key.

65 To load the ENET node, type

>LOADEN plane_no 0 filename

and press the Enter key.

where

plane_no
is the ENET plane number (0 or 1)

filename
is the name of the load file

Example of a MAP response:

```
WARNING
Any software load in the ENET will be destroyed.
Please confirm ("YES" or "NO"):
```

66 To confirm the command, type

>YES

and press the Enter key.

Example of a MAP response:

Power converter cards in a SuperNode SE 16k ENET (continued)

```
Request to LOADEN ENET Plane:0 Shelf:00 submitted.
Request to LOADEN ENET Plane:0 Shelf:00 passed.
```

67 To return the ENET node to service, type

>RTS plane_no 0

and press the Enter key.

where

plane_no
is the ENET plane number (0 or 1)

Example of a MAP response:

```
Request to RTS ENET Plane:0 Shelf:00 submitted.
Request toRTS ENET Plane:0 Shelf:00 passed.
There are no suspect cards.
```

If the RTS command	Do
passed	step 68
failed	step 90

68 To access the ENET SHELF level of the MAP display, type

>SHELF

and press the Enter key.

69 To manually busy all crosspoint cards on the shelf side, type

>BSY plane_no ALL

and press the Enter key.

where

plane_no
is the ENET plane number (0 or 1)

70 To confirm the command, type

>YES

and press the Enter key.

71 To return all crosspoint cards on the shelf side, type

>RTS plane_no ALL

and press the Enter key.

where

plane_no
is the ENET plane number (0 or 1)

Example of a MAP response:

Power converter cards in a SuperNode SE 16k ENET (continued)

```
Request to RTS ENET Plane:1 Shelf:00 submitted.
Request to RTS ENET Plane:1 Shelf:00 passed.
```

72 To access the ENET SYSTEM level of the MAP, type

>SYSTEM

and press the Enter key.

73 To clear the deload condition on all crosspoint cards in the node, type

>DELOAD plane_no 0 CLEAR

and press the Enter key.

where

plane_no
is the ENET plane number (0 or 1)

Example of a MAP response:

```
Request to CLEAR DELOAD ENET Plane:0 Shelf:00 submitted.
Request to CLEAR DELOAD ENET Plane:0 Shelf:00 passed.
```

74 The next action depends if you recorded a list of deloaded cards in step 8.

If you	Do
recorded a card list	step 75
did not record a card list	step 78

75 To access the ENET SHELF level of the MAP display, type

>SHELF 0

and press the Enter key.

76 To set the first card on the list to the deloaded state, type

>DELOAD plane_no slot_no SET

and press the Enter key.

where

plane_no
is the number of the ENET plane (0 or 1)

slot_no
is the number of the slot the card occupies (slots 12 to 19 on plane 0, slots 22 to 29 on plane 1)

If	Do
more cards on the list are not deloaded	step 77

Power converter cards in a SuperNode SE 16k ENET (continued)

If	Do
all cards on the list are deloaded	step 78

77 Repeat step 76 for the next card on the list.

78 The next action depends if the ENET shelf has LIU7s.

If the ENET shelf	Do
has LIU7s	step 79
does not have LIU7s	step 91

79 To access the PM level of the MAP display, type

>MAPCI;MTC;PM

and press the Enter key.

80 To post the LIU7 on the shelf side, type

>POST LIU7 liu_no

and press the Enter key.

where

liu_no
is the number of the LIU7 (0 to 511)

81 To load the LIU7, type

>LOADPM

and press the Enter key.

Example of a MAP response:

```
LIU7 208 LOADPM Passed
```

If the LOADPM command	Do
passed	step 83
failed	step 82

82 To load the LIU7, perform the procedure *Loading a PM* in this NTP. Complete the procedure and return to this point.

83 To return the LIU7 to service, type

>RTS

and press the Enter key.

Example of a MAP response:

Power converter cards in a SuperNode SE 16k ENET (end)

```
LIU7 100 RTS Passed
```

If the RTS command	Do
passed	step 84
failed	step 90

84 To activate the CCS7 link associated with the LIU7, perform the procedure *Activating CCS7 links* in this NTP. Complete the procedure and return to this point.

85 The next action depends on the reason that you perform this procedure.

If a maintenance procedure	Do
directed you to this procedure	step 86
did not direct you to this procedure	step 91

86 Return to the maintenance procedure that directed you to this procedure and continue as directed.

87 This procedure instructs you to deload and manually busy an ENET node. Continue this procedure only under special conditions because the mate ENET node has deloaded cards. Consult office personnel or the next level of support. Continue as directed.

88 To determine why the component is offline, consult operating company personnel. Continue as directed by operating company personnel.

89 If you continue this procedure, you can isolate the LIU7 on the other side of the shelf. To determine if you must continue this procedure, contact office company personnel or the next level of support. Continue as directed.

90 For additional help, contact the next level of support.

91 The procedure is complete.

System cards in a SuperNode SE 16k ENET

Application

Use this procedure to replace the following cards in a SuperNode SE (SNSE) 16k enhanced network (ENET).

PEC	Suffix	Card name	Shelf or frame name
NT9X13	FA, KA	DMS SuperNode processor card	Enhanced network and interface (ENI)
NT9X26	AA, AB	Remote terminal interface paddle board	ENI
NT9X36	BA	ENET message clock card	ENI
NT9X40	BA, BB, DA	ENET + quad fiber paddle board	ENI slots 11 or 21

Refer to the “Index", if you cannot identify the following features for the card that you want to replace:

- product engineering code (PEC)
- PEC suffix
- provisioned shelf
- provisioned frame

The “Index" contains a list of the cards, shelves, and frames documented in this card replacement book.

Common procedures

This procedure refers to the following common procedures:

- *Replacing a card*
- *Reseating cards in equipment shelves*
- *Unseating cards in equipment shelves*
- *Verifying load compatibility of SuperNode cards*
- *Cleaning fiber optic components and assemblies*

Do not go to the common procedure unless the step-action procedure directs you.

System cards in a SuperNode SE 16k ENET (continued)

Action

This procedure contains a summary flowchart and a list of steps. Use the flowchart to review the procedure. Follow the steps to perform the procedure.

System cards in a SuperNode SE 16k ENET (continued)

Summary of replacing System cards in a SuperNode SE 16k ENET

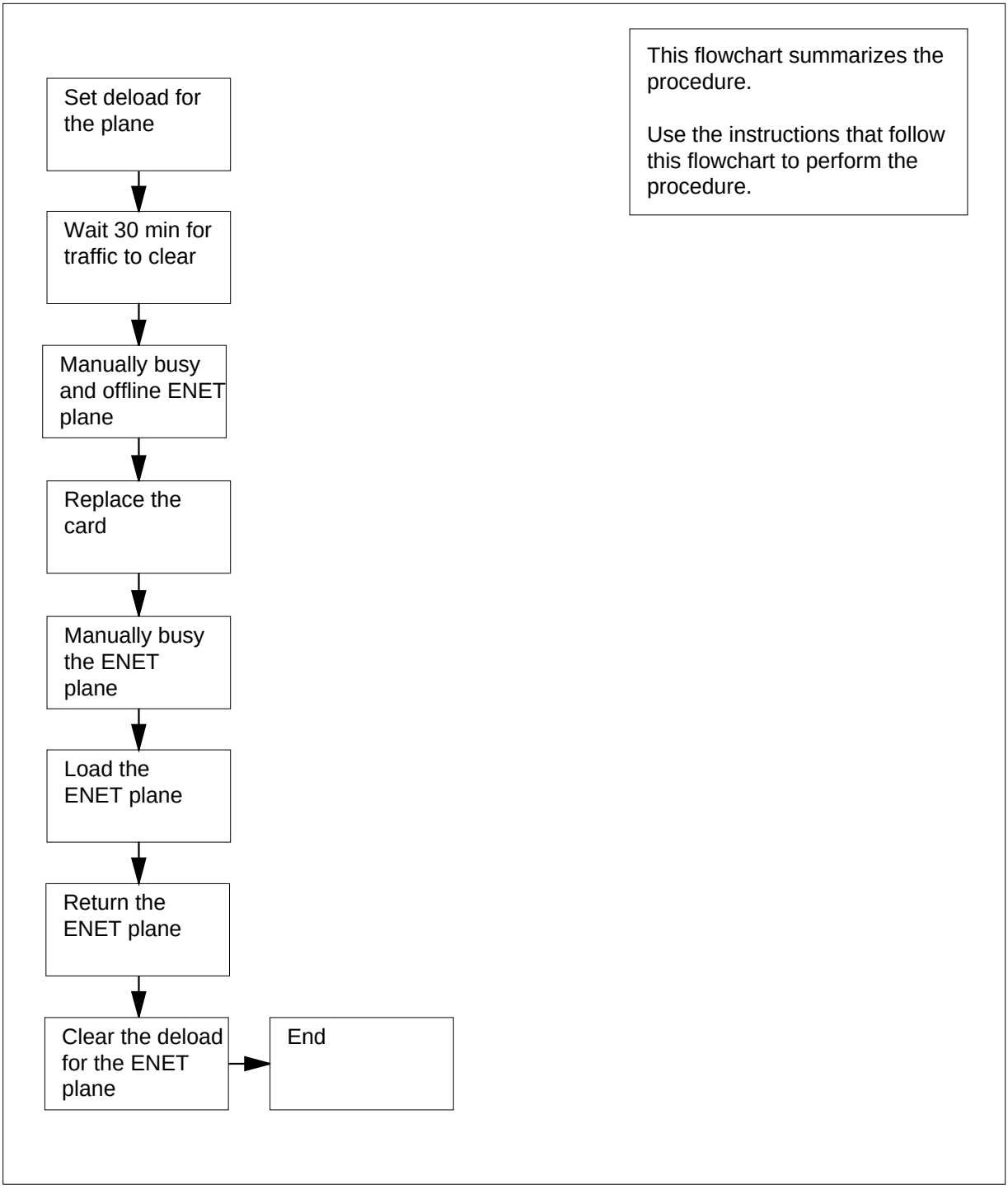

System cards in a SuperNode SE 16k ENET (continued)

Replacing System cards in a SuperNode SE 16k ENET

At the MAP terminal

1

> **WARNING**
> **System can drop calls**
> This procedure removes an ENET shelf from service, which can cause the system to drop calls now in progress. Perform this procedure only if you need to return system cards to service. If you do not need to return system cards to service, perform this procedure during periods of low traffic.

Obtain a replacement card. Make sure that the replacement card and the card that you remove have the same PEC and PEC suffix.

2 To make sure that the replacement card is compatible with the software load, perform the procedure *Verifying load compatibility of SuperNode cards*. The procedure *Verifying load compatibility of SuperNode cards* appears in this NTP. Complete the procedure and return to this point.

3 To access the NET;SYSTEM level of the MAP display, type

`>MAPCI;MTC;NET;SYSTEM`

and press the Enter key.

Example of a MAP display:

```
SYSTEM
  Shelf    Plane 0                    Plane 1
   00        I CSLink 1 closed          .
```

4 Determine the state of the plane that contains the card that you replace. The state appears under the Plane headers on the SYSTEM level MAP display. In the MAP display example in step 3, plane 0 is in-service trouble (`I`) and plane 1 is in service.

If the status of the node	Do
is `T` (being tested)	step 5
is other than listed here	step 6

5 Wait for the system to complete system-initiated testing. To evaluate the state of the node again, go to step 4.

6 To determine if deloaded crosspoint cards are in the other ENET plane, type

`>DELOAD plane_no 0 QUERY`

and press the Enter key.

where

System cards in a SuperNode SE 16k ENET (continued)

plane_no
is the ENET plane number (0 or 1) for the mate node

Example of a MAP response:

```
Request to QUERY DELOAD ENET Plane:0 Shelf:00 submitted.
Request to QUERY DELOAD ENET Plane:0 Shelf:00 passed.
                 1111111 111
                 0123456 789
Plane:0 Shelf:00 .Y.---- ---
```

Note: The letter Y under the slot number indicates a deloaded crosspoint card.

If the other ENET plane	Do
has deloaded cards	step 65
does not have deloaded cards	step 7

7 To determine if deloaded crosspoint cards are in the plane, type

>DELOAD plane_no 0 QUERY

and press the Enter key.

where

plane_no
is the number of the ENET plane (0 or 1) that contains the card that you replace

If the ENET plane	Do
has deloaded cards	step 8
does not have deloaded cards	step 9

8 Record the plane number and slot number for any deloaded crosspoint cards in the plane. Use this list to make sure that these cards are returned to the deloaded state when you complete this procedure.

9 To set all crosspoint cards for the ENET plane that contains the card that you will replace to a deloaded state, type

>DELOAD plane_no 0 SET

and press the Enter key.

where

plane_no
is the ENET plane number (0 or 1)

Example of a MAP response:

```
Request to SET DELOAD ENET Plane:0 Shelf:00 submitted.
Request to SET DELOAD ENET Plane:0 Shelf:00 passed.
```

System cards in a SuperNode SE 16k ENET (continued)

10 Wait 30 min to permit network traffic on the node to clear.

11 The next step depends on the state of the ENET plane that contains the card that you replace.

If the ENET plane	Do
is O (offline)	step 17
is M (manual busy)	step 15
is other than listed here	step 12

12 To manually busy the ENET plane, type

```
>BSY  plane_no  0
```

and press the Enter key.

where

plane_no
is the number of the ENET plane (0 or 1) that contains the card you replace

If the response is	Do
WARNING: This action will abort ENET dump.Please confirm ("YES", "Y","NO, or "N"):	step 13
Note: The above Warning message is generated when a BSY request and ENET imaging take place at the same time. As card replacement procedures are usually performed during scheduled maintenance periods this conflict may never occur.	
Request to MAN BUSY ENET Plane:0 Shelf:00 Slot:25 submitted. Request to MAN BUSY ENET Plane:0 Shelf:00 Slot:25 passed.	step 15

13 Continue procedure by

If Responding to the message	Do
with YES, abort dump and continue with busy	step 14
with NO, abort busy, continue with dump	step 67

System cards in a SuperNode SE 16k ENET (continued)

14 To abort ENET dump and continue with BSY, type

>YES

and press the Enter key.

15 To offline the ENET plane, type

>OFFL plane_no 0

and press the Enter key.

where

plane_no
is the number of the ENET plane (0 or 1) that contains the card you replace

Example of a MAP response:

```
WARNING: A power down of ENET plane:1 shelf:00 may affect
LIU components.
Please confirm (“YES", “Y", “NO", or “N"):
```

16 To confirm the command, type

>YES

and press the Enter key.

Example of a MAP response:

```
Request to OFFLINE ENET Plane:1 Shelf:00 submitted.
Request to OFFLINE ENET Plane:1 Shelf:00 passed.
```

If the OFFL command	Do
passed	step 17
failed	step 66

17 To locate the message switch (MS) chain head card that associates with the ENET plane, type

>TRNSL plane_no 0

and press the Enter key.

where

plane_no
is the ENET plane number (0 or 1)

Example of a MAP response:

```
Request to TRNSL ENET Plane:0 Shelf:00 submitted.
Request to TRNSL ENET Plane:0 Shelf:00 passed.
ENET Plane:0  Shelf:00 :  MS 0 and 1 Card:05 Link:00 Port:000
```

System cards in a SuperNode SE 16k ENET (continued)

Note: In the example, the number of the chain head card is 5. The link number is 0.

18 Record the number of the chain head card and the link number.

19 To access the MS;SHELF level of the MAP display, type

>MS;SHELF

and press the Enter key.

Example of a MAP display:

```
   Message Switch   Clock   Shelf  0    Inter-MS Link 0 1
MS 0      .         Slave          .                  . .
MS 1      .         M Free         .                  . .

Shelf 0                 1 1 1 1
Card  1 2 3 4 5 6 7 8 9 0 1 2 3
Chain         |
MS 0  . . . . . - - . . . . . .
MS 1  . . . . . - - . . . . . .
```

20 To post the chain head card, type

>CHAIN card_no

and press the Enter key.

where

card_no
is the card number that you recorded in step 18

Example of a MAP display:

```
Chain 05  Range  Link   0 1
MS 0   .  05-05  DS512  . .
MS 1   .  05-05  DS512  . .
```

21 To manually busy the link on the chain on MS 0, type

>BSY 0 LINK link_no

and press the Enter key.

where

link_no
is the link number that you recorded in step 18

Example of a MAP response:

```
Request to MAN BUSY MS: 0 shelf: 0 chain:05 link 0 submitted
Request to MAN BUSY MS: 0 shelf: 0 chain:05 link 0 passed.
```

If the BSY command	Do
passed	step 22

System cards in a SuperNode SE 16k ENET (continued)

If the BSY command	Do
failed	step 66

22 To manually busy the link on the chain on MS 1, type

>BSY 1 LINK link_no

and press the Enter key.

where

link_no
is the link number that you recorded in step 18

If the BSY command	Do
passed	step 23
failed	step 66

23 To access the ENET SHELF level of the MAP display, type

>NET;SHELF

and press the Enter key.

where

plane_no
is the ENET plane number (0 or 1)

Example of a MAP display:

```
ENET     System   Matrix  Shelf 0
 Plane 0 CSLink   Fault         F
 Plane 1 CSLink     .           F

SHELF 00  Power   LIU  ENET-Plane 0 ENET-Plane 1  LIU Power
                      11  11111111 22  22222222  333  333333
 Slot     123456  789  01  23456789 01  23456789  012  345678
          .  .         .F  SSSSSSSS .F  ........       .  .
```

24 To manually busy all crosspoint cards on the shelf side, type

>BSY plane_no ALL

and press the Enter key.

where

plane_no
is the ENET plane number (0 or 1)

Example of a MAP response:

System cards in a SuperNode SE 16k ENET (continued)

```
WARNING: This action will be performed on ALL XPT slots
          in ENET Plane:1 that are MBSY, INSV, OFFL,
          SBSY, or CBSY.
Please confirm ("YES", "Y", "NO", or "N"):
```

25 To confirm the command, type

>YES

and press the Enter key.

Example of a MAP response:

```
Request to MAN BSY ALL ENET Plane:1 Shelf:00 submitted.
Request to MAN BSY ALL ENET Plane:1 Shelf:00 completed.
```

26 To ofline all crosspoint cards in the ENET shelf, type

>OFFL plane_no ALL

and press the Enter key.

where

plane_no
is the number of the ENET plane (0 or 1) containing the card you are replacing

Example of a MAP response:

```
Request to OFFLINE ENET Plane:0 Shelf:00 submitted.
Request to OFFLINE ENET Plane:0 Shelf:00 passed.
```

At the ENET shelf

27

WARNING
Static electricity damage
Wear a wrist strap connected to the wrist-strap grounding point of a frame supervisory panel (FSP) or a modular supervisory panel (MSP) to handle circuit cards. The wrist strap protects the cards against static electricity damage.

The next action depends on the type of card that you replace.

If the card	Do
is an NT9X13	step 28
is an NT9X40	step 30

System cards in a SuperNode SE 16k ENET (continued)

If the card	Do
is an NT9X26 or NT9X36	step 33

28 To unseat the NT9X36 (messaging clock) card on the shelf side, perform the procedure *Unseating cards in equipment shelves*. The procedure *Unseating cards in equipment shelves* appears in this NTP. Complete the procedure. Wait 20 s and return to this point.

29 To reseat the NT9X36 card, perform the procedure *Reseating cards in equipment shelves* in this NTP. Complete the procedure. Wait 20 s and return to this point.

Go to step 33.

30

> **ATTENTION**
> Make sure that you identify connector zone numbers correctly. To identify zone numbers, refer to figure "NT9X40BA/BB connector zone numbers" for the NT9X40. Figures "Fiber connector detail" and "Fiber connector and receptable detail" are diagrams of fiber connector components for these cards. The figures are at the end of this procedure.

Make sure that you are at the correct ENET node and interface card before you disconnect the fiber cables. To identify the ENET node, check the plane and shelf identification. To identify the interface card, check the slot.

31 Make sure that each cable has a label that contains the following information:

- ENET shelf number
- plane number
- slot number
- link number
- signal type

The signal type can be transmit or receive. If this information is not present, create a label and attach the label to the cable. This label provides information on how to connect the fiber cables to the card.

Example of a label:

```
ENCO    00    39
10R     04    17T
LTE     000   18
22R     RX
```

Label field descriptions

System cards in a SuperNode SE 16k ENET (continued)

ENCO	ENET plane (0 or 1)
00	cabinet number
39	ENET shelf by the base mounting position number
10R	slot number and position (R for rear, or F for front)
04	zone number
17T	link number and the signal type (T for transmit, R for receive)
LTE	PM that the cable terminates on
000	PM frame number
18	PM shelf by the base mounting position number
22R	slot number and position (R for rear, or F for front)
RX	signal type at the PM end (RX for receive or TX for transmit)

32

DANGER
Avoid contamination of the fiber tip surface
Make sure that you do not touch the tip of the fiber. Dirt or oil from the skin transferred to the fiber tip surface degrades fiber performance.

DANGER
Fiber cable can become defective
Make sure that you handle fiber cables carefully. Do not crimp fiber cables or bend fiber cables to a radius of less than 3 cm (1.180 in.).

Disconnect the transmit and receive connectors for each fiber cable.

Note: When you disconnect the connectors, place dust caps on the ends of the connectors.

a Grasp the sleeve with two fingers. Carefully push the sleeve toward the frame.

System cards in a SuperNode SE 16k ENET (continued)

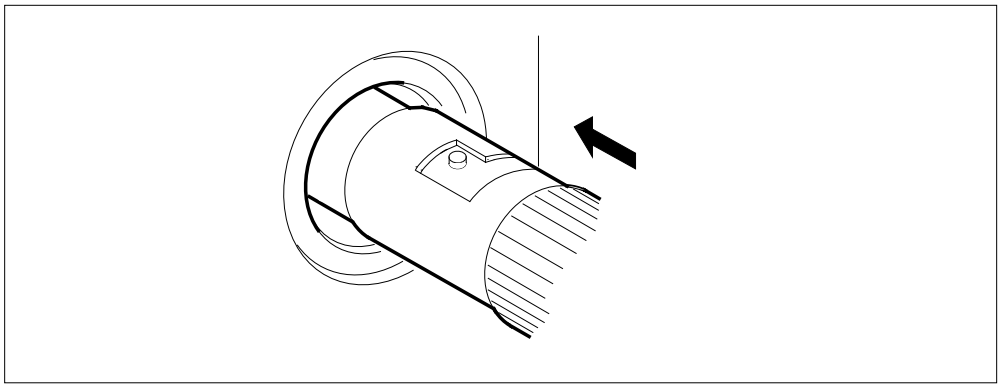

b Turn the connector counterclockwise until the connector pin is in the position shown in the following diagram.

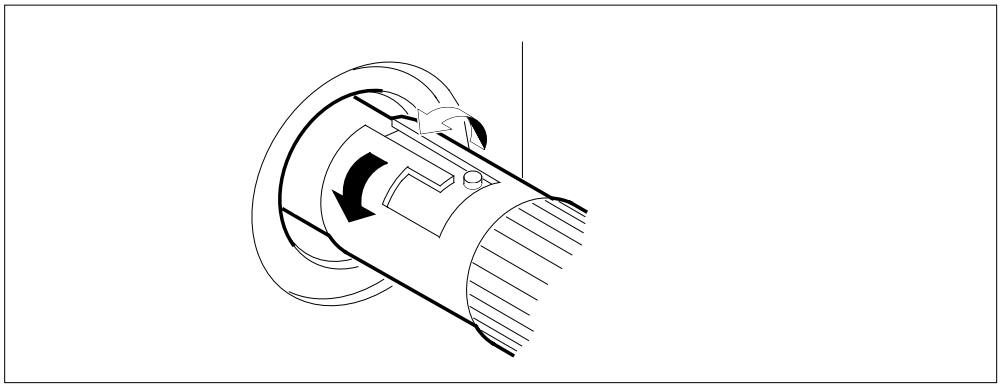

c Carefully pull the connector away from the frame.

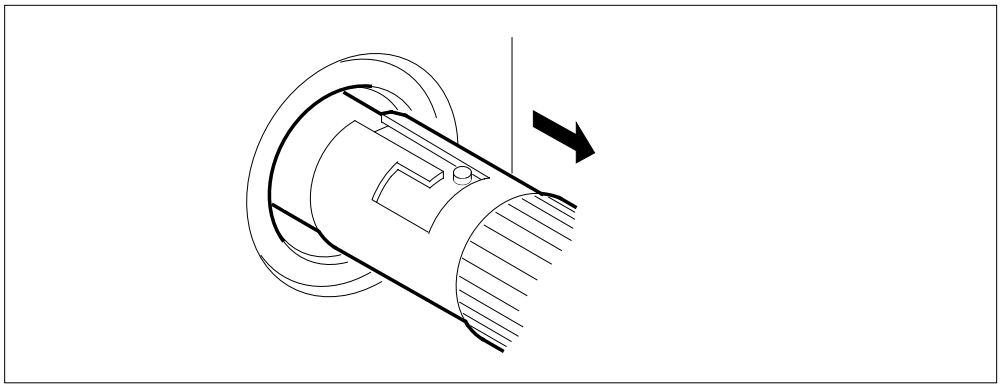

Note: Perform the procedure, *Cleaning fiber optic components and assemblies* in this NTP.

System cards in a SuperNode SE 16k ENET (continued)

33 To replace the card, perform the procedure *Replacing a card* in this NTP. Complete the procedure and return to this point.

Note: If the card that you replace has switches, make sure that the switches on the replacement card have the same settings.

34 The next action depends on the type of card that you replace.

If the card	Do
is an NT9X13	step c
is an NT9X40	step 35
is an NT9X26 or NT9X36	step b

35 When you connect the connectors to the new card, remove the dust caps on the transmit and receive connectors.

Connect the transmit and receive connectors for each fiber cable.

a Align the connector pin and slot with the receptacle slot and pin, in the sequence given, as shown in the following diagram.

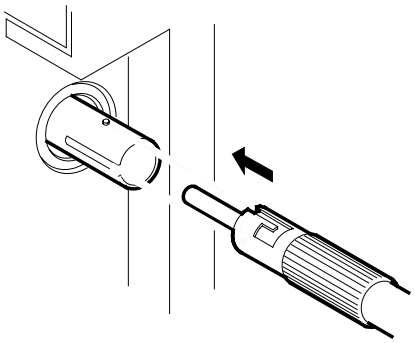

b Carefully slide the connector into the receptacle.

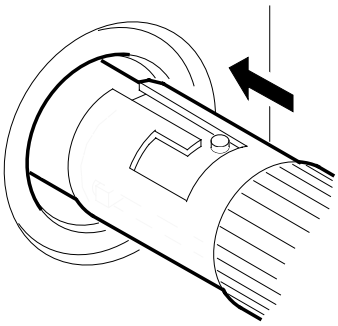

c Turn the connector clockwise to lock the connector in place.

System cards in a SuperNode SE 16k ENET (continued)

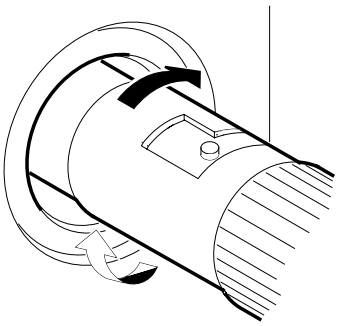

d Release the connector. The following figure displays the final connector position.

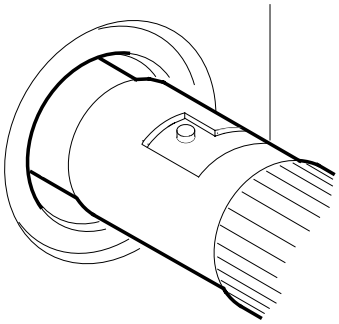

36 To unseat the NT9X13 (processor) card on the shelf side, perform the procedure *Unseating cards from equipment shelves*. The procedure *Unseating cards in equipment shelves* appears in this NTP. Complete the procedure. Wait 20 s and return to this point.

37 To reseat the NT9X13 card on the shelf side, perform the procedure *Reseating cards in equipment shelves*. The procedure *Reseating cards in equipment shelves* appears in this NTP. Complete the procedure and return to this point.

Note: Wait a minimum of 30 s before you continue this procedure.

At the MAP terminal

38 To access the MS Chain card level of the MAP display, type

```
>MS;SHELF;CHAIN  card_no
```

and press the Enter key.

where

System cards in a SuperNode SE 16k ENET (continued)

card_no
is the card number that you recorded in step 18

39 To return the link on the chain on MS 0 to service, type

>RTS 0 LINK link_no

and press the Enter key.

where

link_no
is the link number that you recorded in step 18

Example of a MAP response:

```
Request to RTS MS: 0 shelf: 0 chain:05 link 0 submitted.
Request to RTS MS: 0 shelf: 0 chain:05 link 0 passed.
```

If the RTS command	Do
passed	step 40
failed	step 66

40 To return the link on the chain on MS 1 to service, type

>RTS 1 LINK link_no

and press the Enter key.

where

link_no
is the link number that you recorded in step 18

If the RTS command	Do
passed	step 41
failed	step 66

41 To access the NET;SYSTEM level of the MAP display, type

>NET;SYSTEM

and press the Enter key.

42 To manually busy the ENET plane, type

>BSY plane_no 0

and press the Enter key.

where

System cards in a SuperNode SE 16k ENET (continued)

plane_no
is the ENET plane number (0 or 1)

If the response	Do
requests confirmation	step 43
indicates the BSY command passed	step 44

43 To confirm the command, type

>YES

and press the Enter key.

If the BSY command	Do
passed	step 44
failed	step 66

44 The next action depends on the location of the load file.

If the load file	Do
is as specified in tables PMLOADS and ENINV	step 45
is different from the file specified in tables PMLOADS and ENINV	step 46

45 To load the ENET node, type

>LOADEN plane_no 0

and press the Enter key.

where

plane_no
is the ENET plane number (0 or 1)

Example of a MAP response:

```
WARNING  Any software load in the ENET will be destroyed.
Please confirm ("YES" or "NO"):
```

Go to step 52.

46 To access the CI level of the MAP display, type

>QUIT ALL

and press the Enter key.

System cards in a SuperNode SE 16k ENET (continued)

47 To access the disk utility, type

>DISKUT

and press the Enter key.

Example of a MAP response:

```
Disk utility is now active.
DISKUT:
```

48 To list the contents for the volume that contains the load file, type

>LISTFL vol_name

and press the Enter key.

where

vol_name
is the name of the volume that contains the ENET load file

Example of a MAP response:

```
File information for volume S00DVOL1:
{NOTE:  1 BLOCK = 512 BYTES }
-------------------------------------------------------------------
  LAST FILE O R I O       FILE     NUM OF   MAX    FILE NAME
MODIFY CODE R E T P       SIZE    RECORDS   REC
  DATE      G C O E         IN         IN   LEN
                C N     BLOCKS       FILE
-------------------------------------------------------------------

760128      0 O F          277       3219    44 EDRMAC07
941101      0 I F Y       9494       4747  1020 RAPC03AW_1101_MS
760104      0 O V          651        162  2048 MPC402BX
760104      0 O F           63        424    76 TDCMPA01
760104      0 O F           37        249    76 TTMNA01
941101      0 I F Y     202934     101467  1020 RAPC03AW_1101_CM
941025      0 I F         9494       4747  1020 RBCS35CV_1025_MS
941025      0 I F       242454     121227  1020 RBCS35CV_1025_CM
940426      0 O F          784        392  1024 MPCX33AB
930427      0 O F          314       2006    80 MTULI01
```

49 To quit the disk utility, type

>QUIT

and press the Enter key.

50 To access the NET;SYSTEM level of the MAP display, type

>MAPCI;MTC;NET;SYSTEM

and press the Enter key.

51 To load the ENET node, type

>LOADEN plane_no 0 filename

and press the Enter key.

System cards in a SuperNode SE 16k ENET (continued)

where

plane_no
is the ENET plane number (0 or 1)

filename
is the name of the load file

Example of a MAP response:

```
WARNING  Any software load in the ENET will be destroyed.
Please confirm ("YES" or "NO"):
```

52 To confirm the command, type

>YES

and press the Enter key.

Example of a MAP response:

```
Request to LOADEN ENET Plane:0 Shelf:00 submitted.
Request to LOADEN ENET Plane:0 Shelf:00 passed.
```

53 To return the ENET plane to service, type

>RTS plane_no 0

and press the Enter key.

where

plane_no
is the ENET plane number (0 or 1)

Example of a MAP response:

```
Request to RTS ENET Plane:0 Shelf:00 submitted.
Request to RTS ENET Plane:0 Shelf:00 passed.

There are no suspect cards.
```

If the RTS command	Do
passed	step 54
failed	step 66

54 To access the ENET SHELF level of the MAP, type

>SHELF 0

and press the Enter key.

55 To manually busy all crosspoint cards in the ENET shelf, type

>BSY plane_no ALL

and press the Enter key.

where

System cards in a SuperNode SE 16k ENET (continued)

plane_no
is the number of the ENET plane (0 or 1) containing the card you are working on

If the BSY command	Do
passed	step 56
failed	step 66

56 To return all crosspoint cards on the shelf to service, type

>RTS plane_no ALL

and press the Enter key.

plane_no
is the ENET plane number (0 or 1)

Example of a MAP response:

```
Request to RTS ENET Plane:1 Shelf:00 submitted.
Request to RTS ENET Plane:1 Shelf:00 passed.
```

57 To access the ENET SYSTEM level of the MAP display, type

>SYSTEM

and press the Enter key.

58 To clear the deload condition on all crosspoint cards in the plane, type

>DELOAD plane_no 0 CLEAR

and press the Enter key.

where

plane_no
is the ENET plane number (0 or 1)

Example of a MAP response:

```
Request to CLEAR DELOAD ENET Plane:0 Shelf:00 submitted.
Request to CLEAR DELOAD ENET Plane:0 Shelf:00 passed.
```

59 The next action depends if you recorded a list of deloaded cards in step 8.

If you	Do
recorded a card list	step 60
did not record a card list	step 63

60 To access the SHELF level of the MAP display, type

>SHELF 0

and press the Enter key.

System cards in a SuperNode SE 16k ENET (continued)

61 Set the first card on the list to the deloaded state , type

`>DELOAD plane_no slot_no SET`

and press the Enter key.

where

plane_no
is the ENET plane number (0 or 1)

slot_no
is the number of the slot the card occupies (slots 12 to 19 on plane 0 or slots 22 to 29 on plane 1

If all cards on the list	Do
are not set to a deloaded state	step 62
are set to a deloaded state	step 63

62 Repeat step 61 for the next card on the list.

63 The next action depends on the reason that you perform this procedure.

If a maintenance procedure	Do
directed you to this procedure	step 64
did not direct you to this procedure	step 68

64 Return to the maintenance procedure that directed you to this procedure and continue as directed.

65 This procedure instructs you to deload a node. Continue this procedure only under special conditions because the mate node has deloaded cards. Consult office personnel or the next level of support. Continue as directed.

66 For additional help, contact the next level of support.

67 To abort BSY command and continue with dump, type

`>NO`

and press the Enter key BSY has been aborted, ENET dump is continuing.

68 The procedure is complete.

System cards in a SuperNode SE 16k ENET (continued)

NT9X40BA/BB connector zone numbers

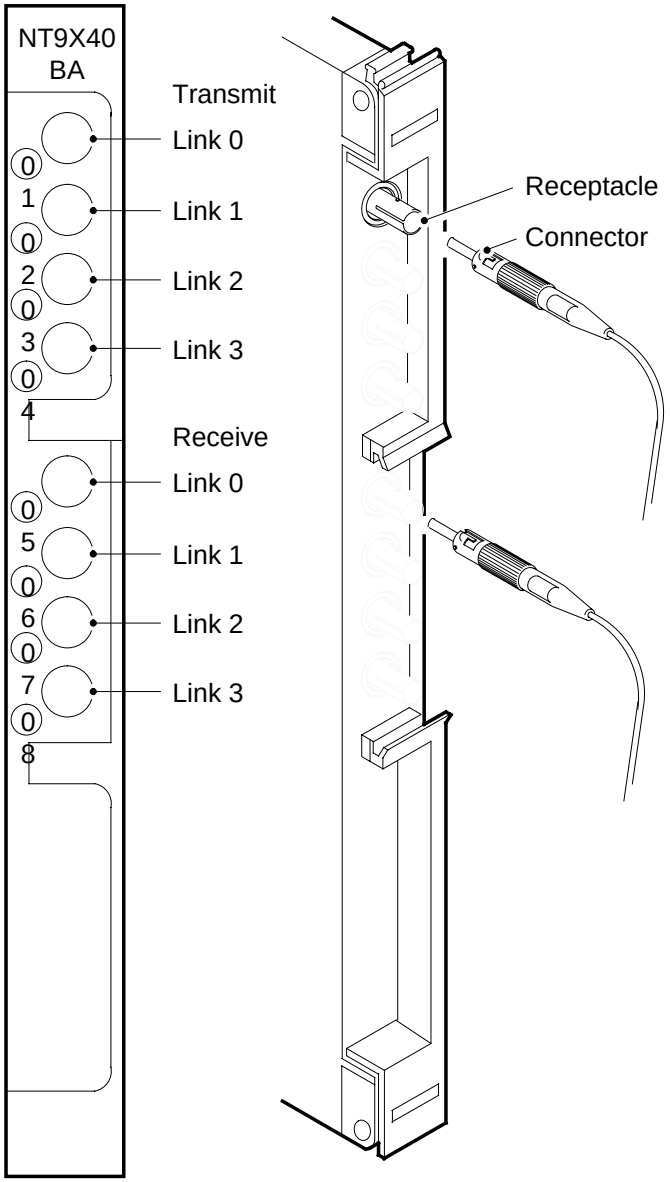

The figure correlates the zone numbers (1 to 8) to the link numbers. The zone numbers appear on the face of the card. The link numbers appear on the MAP display for the NT9X40BA or NT9X40BB interface card. The figure indicates the fiber connections only. Observe carefully the zone identification marks for transmit and receive.

System cards in a SuperNode SE 16k ENET (end)

Fiber connector detail

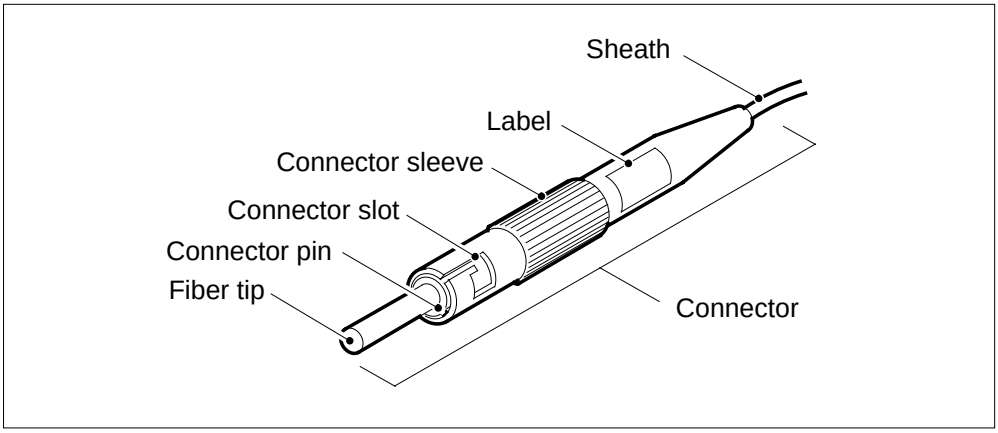

This figure shows the type of connector used to connect fibers to an NT9X40 or NT9X45 paddle board.

Fiber connector and receptacle detail

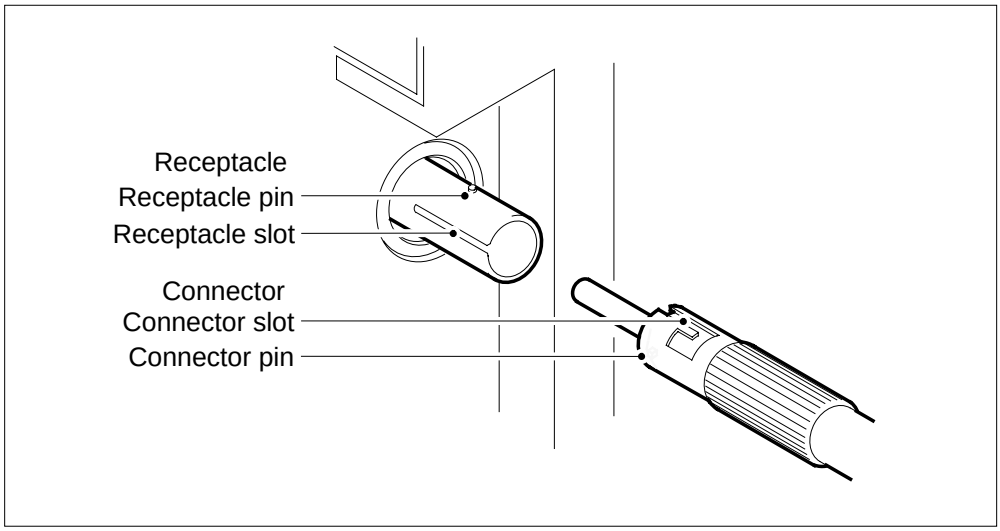

This figure shows the different parts of the connector and receptacle.

System cards in a SuperNode SE 32k ENET

Application

Use this procedure to replace the following cards in a SuperNode SE 32k enhanced network shelf (ENET).

PEC	Suffix	Card name	Shelf or frame name
NT9X13	FA, KA	DMS SuperNode processor card	32k ENET
NT9X26	AA, AB	Reset terminal interface (RTIF) paddle board	32k ENET
NT9X30	AA, AC	+5V 86-A power converter card	32k ENET
NT9X31	AA, AB	-5V 20-A power converter for DMS-100E card	32k ENET
NT9X36	BA	ENET messaging clock card	32k ENET
NT9X40	BA, BB, DA	ENET + quad fiber paddle board	32k ENET, slot 8

Refer to the “Index", if you cannot identify the following features for the card that you want to replace:

- product engineering code (PEC)
- PEC suffix
- provisioned shelf
- provisioned frame

The “Index" contains a list of the cards, shelves, and frames documented in this card replacement book.

System cards in a SuperNode SE 32k ENET (continued)

Common procedures

This procedure refers to the following common procedures:

- *Replacing a card*
- *Verifying load compatibility of SuperNode cards*
- *Cleaning fiber optic components and assemblies*

Do not go to the common procedure unless the step-action procedure directs you.

Action

This procedure contains a summary flowchart and a list of steps. Use the flowchart to review the procedure. Follow the steps to perform the procedure.

System cards in a SuperNode SE 32k ENET (continued)

Summary of Replacing System cards in a SuperNode SE 32k ENET

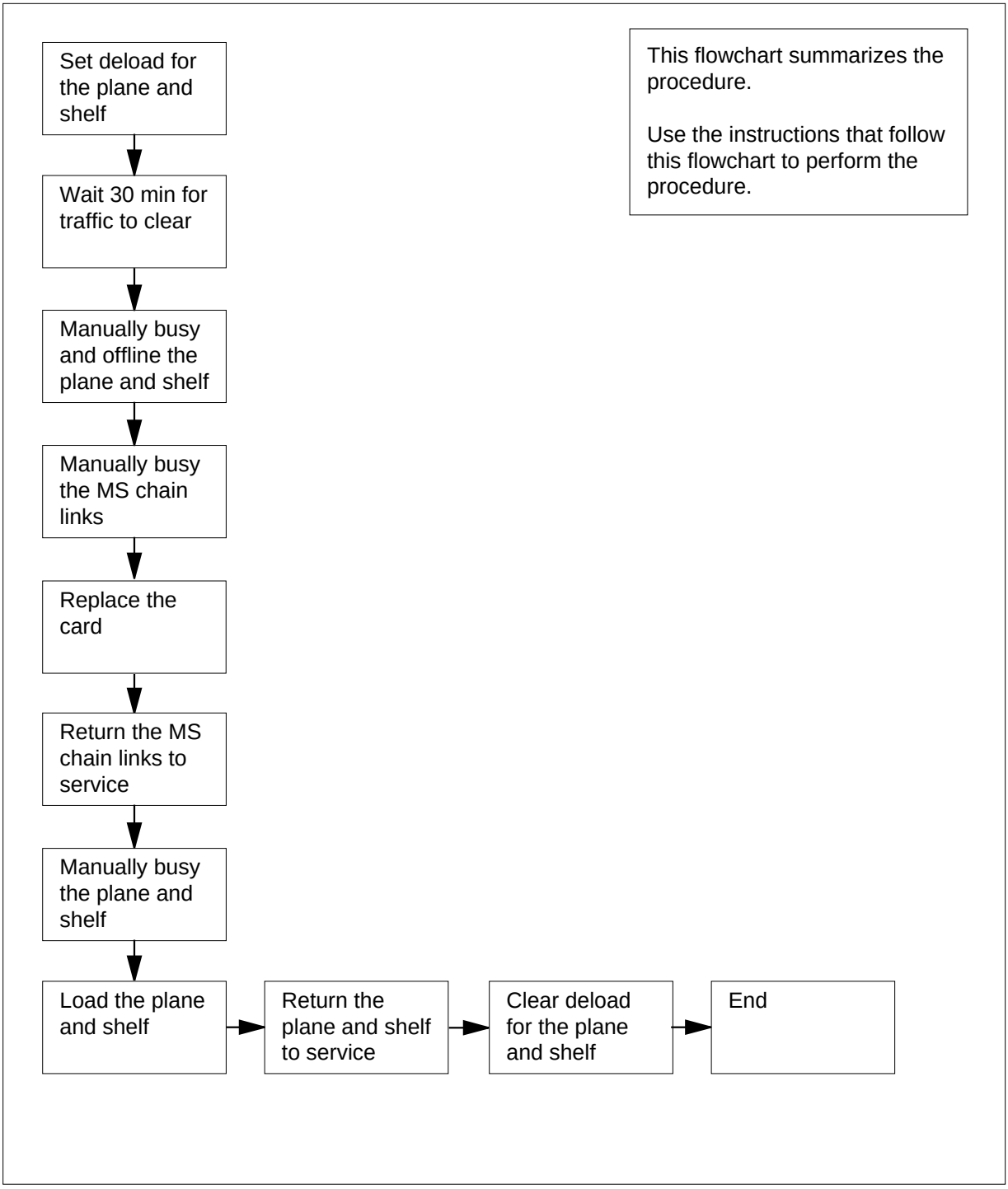

System cards in a SuperNode SE 32k ENET (continued)

Replacing System cards in a SuperNode SE 32k ENET

At your current location

1

> **CAUTION**
> **System can drop calls**
> This procedure removes an ENET shelf from service, which can cause the system to drop calls now in progress. Perform this procedure only if you need to return system and power converter cards to service. If you do not need to return the cards to service, perform this procedure during periods of low traffic.

Obtain a replacement card. Make sure that the replacement card and the card that you remove have the same PEC and PEC suffix.

2 To make sure that the replacement card is compatible with the software load, perform the procedure *Verifying load compatibility of SuperNode cards*. The procedure *Verifying load compatibility of SuperNode cards* appears in this document. Complete the procedure and return to this point.

At the MAP terminal

3 To access the NET;SYSTEM level of the MAP display, type

`>MAPCI;MTC;NET;SYSTEM`

and press the Enter key.

Example of a MAP display:

```
SYSTEM
 Shelf    Plane 0                  Plane 1
  00        I CSLink 1 closed        .
```

4 Check the state of the ENET plane that contains the card you replace. The state appears under the Plane headers on the SYSTEM level MAP display. In the example shown in step 3, plane 0 is in-service trouble (`I`) and plane 1 is in service.

If the state of the plane	Do
is `T` (being tested)	step 5
is other than listed here	step 6

5 Wait until the system completes system-initiated testing. To evaluate the state of the plane again, go to step 4.

6 To determine if deloaded crosspoint cards are in the other plane, type

`>DELOAD plane_no 0 QUERY`

System cards in a SuperNode SE 32k ENET (continued)

and press the Enter key.

where

plane_no
is the ENET plane number (0 or 1) for the mate node

Example of a MAP response:

```
Request to QUERY DELOAD ENET Plane:0 Shelf:00 submitted.
Request to QUERY DELOAD ENET Plane:0 Shelf:00 passed.
                  1111111 11122222 22222333
                 90123456 78901234 56789012
Plane:0 Shelf:00 ..Y.---- -------- ----....
```

Note: The letter Y under the slot number indicates a deloaded crosspoint card.

If the plane	Do
has deloaded cards	step 66
does not have deloaded cards	step 7

7 To determine if deloaded crosspoint cards are in the plane, type

>DELOAD plane_no 0 QUERY

and press the Enter key.

where

plane_no
is the ENET plane number (0 or 1)

If the plane	Do
has deloaded cards	step 8
does not have deloaded cards	step 9

8 Record the slot number for any deloaded crosspoint cards in the plane. Use this list to make sure that these cards are returned to the deloaded state when you complete this procedure.

9 To set all crosspoint cards for the plane that associates with the card that you will replace to a deloaded state, type

>DELOAD plane_no 0 SET

and press the Enter key.

where

plane_no
is the ENET plane number (0 or 1)

Example of a MAP response:

System cards in a SuperNode SE 32k ENET (continued)

```
Request to SET DELOAD ENET Plane:0 Shelf:00 submitted.
Request to SET DELOAD ENET Plane:0 Shelf:00 passed.
```

10 Wait 30 min to allow network traffic on the plane to clear.

11 The next step depends on the state of the ENET plane that contains the card you replace.

If the ENET plane	Do
is O (offline)	step 14
is M (manual busy)	step 13
is other than listed here	step 12

12 To manually busy the ENET plane that contains the card you replace, type

>BSY plane_no 0

and press the Enter key.

where

plane_no
is the ENET plane number (0 or 1)

Example of a MAP response:

```
Request to MAN BUSY ENET Plane:0 Shelf:00 submitted.
Request to MAN BUSY ENET Plane:0 Shelf:00 passed.
```

If the BSY command	Do
passed	step 13
failed	step 57

13 To offline the ENET plane, type

>OFFL plane_no 0

and press the Enter key.

where

plane_no
is the ENET plane number (0 or 1)

Example of a MAP response:

System cards in a SuperNode SE 32k ENET (continued)

```
Request to OFFL ENET Plane:0 Shelf:00 submitted.
Request to OFFL ENET Plane:0 Shelf:00 passed.
```

If the OFFL command	Do
passed	step 14
failed	step 57

14 To locate the message switch (MS) chain head card that associates with the ENET plane, type

>TRNSL plane_no 0

and press the Enter key.

where

plane_no
is the ENET plane number (0 or 1)

Example of a MAP response:

```
Request to TRNSL ENET Plane:0 Shelf:00 submitted.
Request to TRNSL ENET Plane:0 Shelf:00 passed.
ENET Plane:0  Shelf:00 :  MS 0 and 1 Card:16 Link:00 Port:000
```

Note: In the example, the number of the chain head card on the MS is 16. The link number is 0.

15 Record the number of the chain head card and the link number.

16 To access the MS;SHELF level of the MAP display, type

>MS;SHELF

and press the Enter key.

Example of a MAP display:

```
     Message Switch   Clock   Shelf  0       Inter-MS Link 0 1
MS 0       M          Slave          C                     - -
MS 1       .          M Free         F                     - -

Shelf 0                 1 1 1 1 1 1 1 1 1 1 2 2 2 2 2 2 2
Card  1 2 3 4 5 6 7 8 9 0 1 2 3 4 5 6 7 8 9 0 1 2 3 4 5 6
Chain                                 | |
MS 0  . . . . . - - - - - - - - - - . . . . . . . . . F I
MS 1  . . . . . - - - - - - - - - - . . . . . . . . . F I
```

17 To access the Chain level of the MAP display, type

>CHAIN card_no

and press the Enter key.

where

System cards in a SuperNode SE 32k ENET (continued)

card_no
is the card number that you recorded in step 15

Example of a MAP display:

```
Chain 05  Range  Link   0 1
MS 0   .  16-17  DS512  . .
MS 1   .  16-17  DS512  . .
```

18 To manually busy the link on the chain on MS 0, type

>BSY 0 LINK link_no

and press the Enter key.

where

link_no
is the link number that you recorded in step 15

Example of a MAP response:

```
Request to MAN BUSY MS: 0 shelf: 0 chain:16 link 0
submitted.
Request to MAN BUSY MS: 0 shelf: 0 chain:16 link 0 passed.
```

If the BSY command	Do
passed	step 19
failed	step 67

19 To manually busy the link on the chain on MS 1, type

>BSY 1 LINK link_no

and press the Enter key.

where

link_no
is the link number that you recorded in step 15

20 To confirm the command, type

>YES

and press the Enter key.

Example of a MAP response:

```
Request to MAN BUSY MS: 1 shelf: 0 chain:16 link 0
submitted.
Request to MAN BUSY MS: 1 shelf: 0 chain:16 link 1 passed.
```

If the BSY command	Do
passed	step 21

System cards in a SuperNode SE 32k ENET (continued)

If the BSY command	Do
failed	step 67

21 To access the ENET SHELF level of the MAP display, type

>NET;SHELF 0

and press the Enter key.

where

plane_no
is the ENET plane number (0 or 1)

Example of a MAP display:

```
SHELF 01  Slot       1111111 11122222 22222333 333333
            123456 78 90123456 78901234 56789012 345678
  Plane 0    O  O   OO CCCCCCCC -------- CCCCCCCC O  O
  Plane 1    .  .   .. ........ -------- ........ .  .
```

22 To busy all crosspoint cards on the shelf, type

>BSY plane_no ALL

and press the Enter key.

where

plane_no
is the ENET plane number (0 or 1)

Example of a MAP response:

```
WARNING: This action will be performed on ALL XPT slots
         in ENET Plane:1 that are MBSY, INSV, OFFL,
         SBSY, or CBSY.
Please confirm ("YES", "Y", "NO", or "N"):
```

23 To confirm the command, type

>YES

and press the Enter key.

Example of a MAP response:

```
Request to MAN BSY ALL ENET Plane:1 Shelf:00 submitted.
Request to MAN BSY ALL ENET Plane:1 Shelf:00 completed.
```

If the BSY command	Do
passed	step 21
failed	step 67

System cards in a SuperNode SE 32k ENET (continued)

24 To offline all crosspoint cards on the shelf, type

`>OFFL plane_no ALL`

and press the Enter key.

Example of a MAP response:

```
Request to OFFLINE ALL ENET Plane:1 Shelf:00 submitted.
Request to OFFLINE ALL ENET Plane:1 Shelf:00 completed.
```

At the ENET shelf

25

WARNING
Static electricity damage
Wear a wrist strap that connects to the wrist-strap grounding point of a frame supervisory panel (FSP) or a modular supervisory panel (MSP) to handle circuit cards. The wrist strap protects the cards against static electricity damage.

The next action depends on the ENET card that you replace.

If you	Do
replace an NT9X30 or NT9X31	step 28
replace an NT9X13	step 26
replace an NT9X40	step 30
replace an NT9X26 or NT9X36	step b

26 To unseat the NT9X36 (messaging clock) card on the shelf, perform the procedure *Unseating cards in equipment shelves*. The procedure *Unseating cards in equipment shelves* appears in this NTP. Complete the procedure. Wait 20 s and return to this point.

27 To reseat the NT9X36 card, perform the procedure *Reseating cards in equipment shelves* in this NTP. Complete the procedure. Wait 20 s and return to this point.

Go to step 33.

System cards in a SuperNode SE 32k ENET (continued)

28 Power down the NT9X31 card that associates with the ENET shelf. To power down the card, press down and release the power switch on the faceplate of the card.

Note: The CONVERTER OFF LED turns on when the converter powers down.

If the CONVERTER OFF LED	Do
is lit	step 29
is not lit	step 67

29 Power down the NT9X30 card that associates with the ENET shelf. To power down the card, press down and release the power switch on the faceplate of the card.

Note: The CONVERTER OFF LED turns on when the converter powers down.

If the CONVERTER OFF LED	Do
is lit	step 33
is not lit	step 67

30

ATTENTION

Make sure that you identify connector zone numbers correctly. To identify zone numbers, refer to figure “NT9X40BA/BB connector zone nu,ber” for the NT9X40. Figures “Fiber connector detail” and “Fiber connector receptacle detail” are diagrams of fiber connector components for these cards. These figures are at the end of this chapter.

Make sure that you are at the correct ENET node and interface card, before you disconnect the fiber cables. To identify the ENET node, check the plane and shelf identification. To identify the interface card, check the slot.

31 Make sure that each cable has a label that contains the following information:

- ENET shelf number
- plane number
- slot number
- link number
- signal type

The signal type can be transmit or receive. If this information is not present, create a label and attach the label to the cable. This label provides information on how to connect the fiber cables to the card.

System cards in a SuperNode SE 32k ENET (continued)

Example of a label:

ENCO	00	39
10R	04	17T
LTE	000	18
22R	RX	

Label field descriptions

ENCO	ENET plane (0 or 1)
00	cabinet number
39	ENET shelf by the base mounting position number
10R	slot number and position (R for rear, or F for front)
04	zone number
17T	link number and the signal type (T for transmit, R for receive)
LTE	PM that the cable terminates on
000	PM frame number
18	PM shelf by the base mounting position number
22R	slot number and position (R for rear, or F for front)
RX	signal type at the PM end (RX for receive or TX for transmit)

32

DANGER
Avoid contamination of the fiber tip surface
Make sure that you do not touch the tip of the fiber. Dirt or oil from the skin transferred to the fiber tip surface degrades fiber performance.

DANGER
Fiber cable can become damaged
Make sure that you handle fiber cables carefully. Do not crimp fiber cables or bend fiber cables to a radius of less than 3 cm (1.180 in.).

Disconnect the transmit and receive connectors for each fiber cable.

Note: When you disconnect the connectors, place dust caps on the ends of the connectors.

a Grasp the sleeve with two fingers. Carefully push the sleeve toward the frame.

System cards in a SuperNode SE 32k ENET (continued)

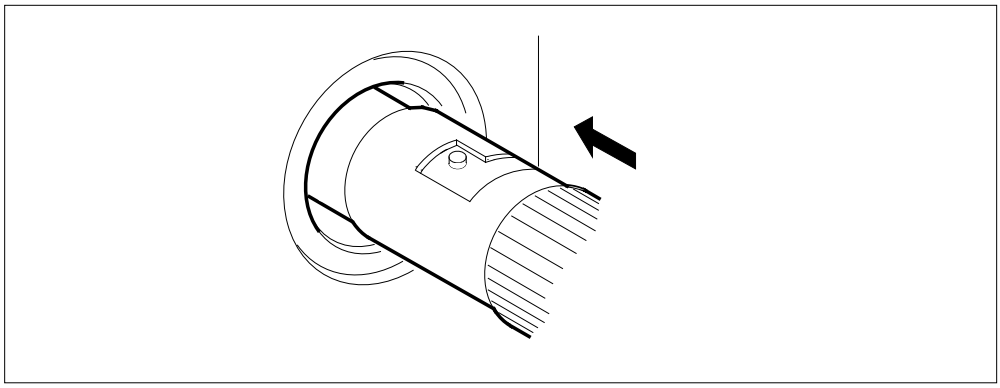

b Turn the connector counterclockwise until the connector pin is in the position shown in the following diagram.

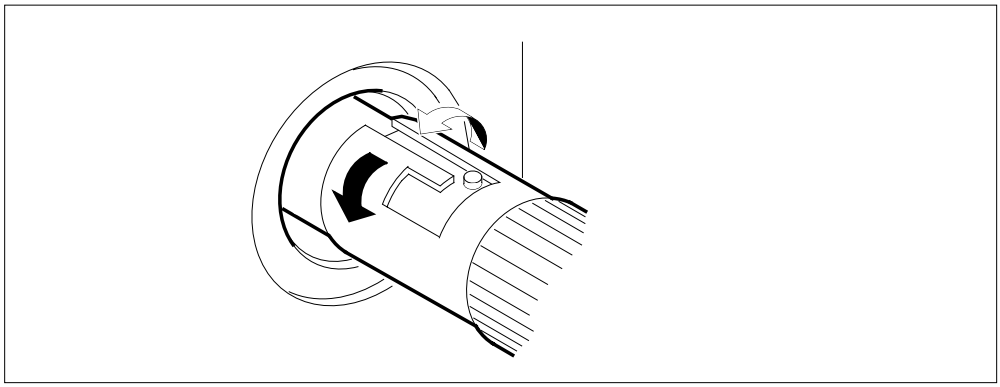

c Carefully pull the connector away from the frame.

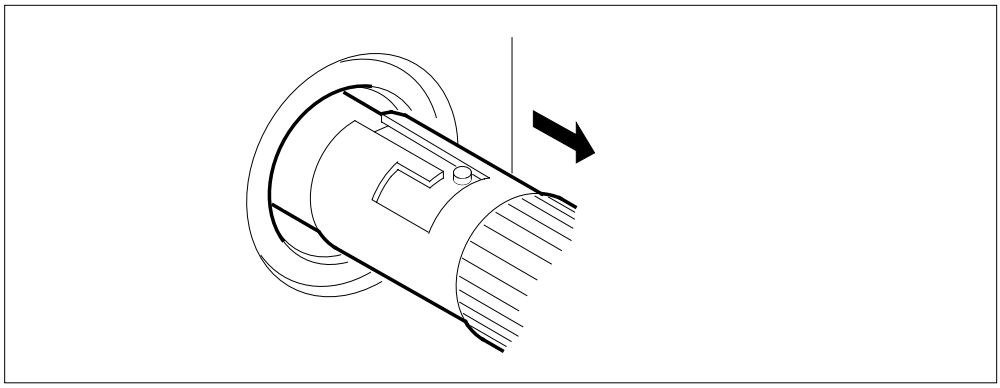

Note: Perform the procedure, *Cleaning fiber optic components and assemblies* in this NTP.

System cards in a SuperNode SE 32k ENET (continued)

33 To replace the card, perform the procedure *Replacing a card* in this document. Complete the procedure and return to this point.

Note 1: If you replace the power converter card, make sure that the PWR switch on the replacement power converter is in the OFF position.

Note 2: If the card that you replace has switches, make sure that the switches on the replacement card have the same settings.

34 The next action depends on the card that you replace.

If you	Do
replace a NT9X30 or NT9X31	step 35
replace a NT9X26 or NT9X36	step 38
replace a NT9X40	step 37
replace a NT9X13	step 40

35 To power up the NT9X30 card, press up and release the power switch on the faceplate of the card.

Note: The CONVERTER OFF LED turns off when the converter powers up.

If the CONVERTER OFF LED	Do
is not lit	step 36
is lit	step 67

36 To power up the NT9X31 card, press up and release the power switch on the faceplate of the card.

Note: The CONVERTER OFF LED turns off when the converter powers up.

If the CONVERTER OFF LED	Do
is not lit	step 40
is lit	step 67

37 When you connect the connectors to the new card, remove the dust caps on the transmit and receive connectors.

Connect the transmit and receive connectors for each fiber cable.

a Align the connector pin and slot with the receptacle slot and pin, in the sequence given, as shown in the following diagram.

System cards in a SuperNode SE 32k ENET (continued)

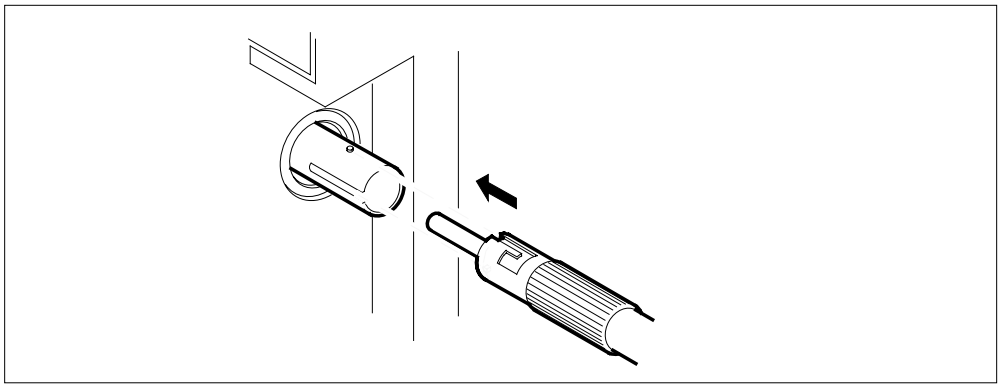

b Carefully slide the connector into the receptacle.

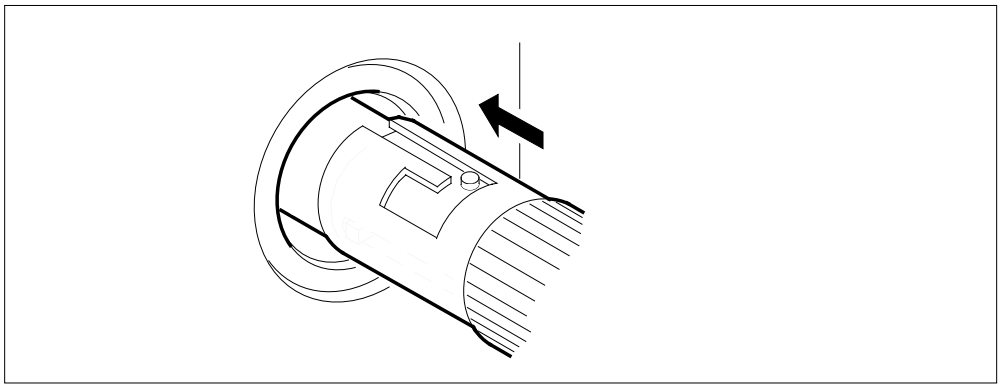

c Turn the connector clockwise to lock the connector in place.

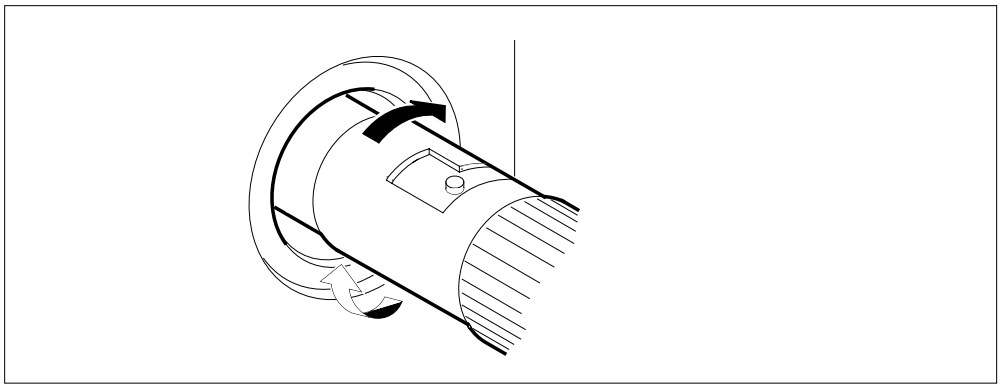

d Release the connector. The following figure displays the final connector position.

System cards in a SuperNode SE 32k ENET (continued)

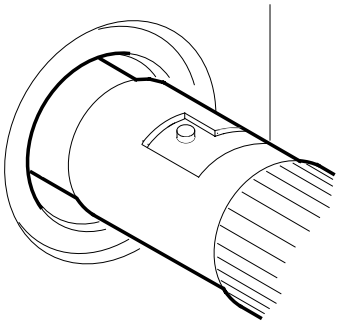

38 To unseat the NT9X13 (processor) card on the shelf side, perform the procedure *Unseating cards in equipment shelves*. The procedure *Unseating cards in equipment shelves* appears in this NTP. Complete the procedure and return to this point.

39 To reseat the NT9X13 card on the shelf side, perform the procedure *Reseating cards in equipment shelves*. The procedure *Reseating cards in equipment shelves* appears in this NTP. Complete the procedure and return to this point.

At the MAP terminal

40 To access the Chain level of the MAP display, type

`>MS;SHELF;CHAIN card_no`

and press the Enter key.

where

card_no
is the card number that you recorded in step 15

41 To return the link on the chain on MS 0 to service, type

`>RTS 0 LINK link_no`

and press the Enter key.

where

link_no
is the link number that you recorded in step 15

Example of a MAP response:

```
Request to RTS MS: 0 shelf: 0 chain:16 link 0 submitted.
Request to RTS MS: 0 shelf: 0 chain:16 link 0 passed.
```

If the RTS command	Do
passed	step 42

System cards in a SuperNode SE 32k ENET (continued)

If the RTS command	Do
failed	step 67

42 To return the link on the chain on MS 1 to service, type

>RTS 1 LINK link_no

and press the Enter key.

where

link_no
is the link number that you recorded in step 15

If the RTS command	Do
passed	step 43
failed	step 67

43 To access the NET;SYSTEM level of the MAP display, type

>NET;SYSTEM

and press the Enter key.

44 To manually busy the ENET plane, type

>BSY plane_no

and press the Enter key.

where

plane_no
is the ENET plane number (0 or 1)

If the BSY command	Do
passed	step 45
failed	step 67

45 The next action depends on the location of the load file.

If the load file	Do
is the same as specified in tables PMLOADS and ENINV	step 46
is different from the file specified in tables PMLOADS and ENINV	step 47

System cards in a SuperNode SE 32k ENET (continued)

46 To load the plane, type

>LOADEN plane_no 0

and press the Enter key.

where

plane_no
is the ENET plane number (0 or 1)

Example of a MAP response:

```
WARNING  Any software load in the ENET will be destroyed.
Please confirm ("YES" or "NO"):
```

Go to step 53.

47 To access the CI level of the MAP display, type

>QUIT ALL

and press the Enter key.

48 To access the disk utility, type

>DISKUT

and press the Enter key.

Example of a MAP response:

```
 Disk utility is now active.
 DISKUT:
```

49 To list the contents for the volume that contains the loadfile, type

>LISTFILE vol_name

and press the Enter key.

where

vol_name
is the name of the volume that contains the loadfile

Example of a MAP response:

System cards in a SuperNode SE 32k ENET (continued)

```
File information for volume S00DVOL1:
{NOTE:  1 BLOCK = 512 BYTES }
-----------------------------------------------------------------
  LAST FILE O R I O       FILE     NUM OF   MAX    FILE NAME
MODIFY CODE R E T P       SIZE    RECORDS   REC
  DATE      G C O E         IN         IN   LEN
                C N     BLOCKS       FILE
-----------------------------------------------------------------

760128    0 O F            277       3219    44 EDRMAC07
941101    0 I F Y         9494       4747  1020 RAPC03AW_1101_MS
760104    0 O V            651        162  2048 MPC402BX
760104    0 O F             63        424    76 TDCMPA01
760104    0 O F             37        249    76 TTMNA01
941101    0 I F Y       202934     101467  1020 RAPC03AW_1101_CM
941025    0 I F           9494       4747  1020 RBCS35CV_1025_MS
941025    0 I F         242454     121227  1020 RBCS35CV_1025_CM
940426    0 O F            784        392  1024 MPCX33AB
930427    0 O F            314       2006    80 MTULI01
```

50 To quit the disk utility, type

>QUIT

and press the Enter key.

51 To return to the NET;SYSTEM level of the MAP display, type

>MAPCI;MTC;NET;SYSTEM

and press the Enter key.

52 To load the plane, type

>LOADEN plane_no 0 filename

and press the Enter key.

where

plane_no
is the ENET plane number (0 or 1)

filename
is the name of the load file

Example of a MAP response:

```
WARNING  Any software load in the ENET will be destroyed.
Please confirm ("YES" or "NO"):
```

53 To confirm the command, type

>YES

and press the Enter key.

Example of a MAP response:

```
Request to LOADEN ENET Plane:0 Shelf:00 submitted.
Request to LOADEN ENET Plane:0 Shelf:00 passed.
```

System cards in a SuperNode SE 32k ENET (continued)

54 To return the ENET plane to service, type

>RTS plane_no

and press the Enter key.

where

plane_no
is the ENET plane number (0 or 1)

Example of a MAP response:

```
Request to RTS ENET Plane:0 Shelf:00 submitted.
Request to RTS ENET Plane:0 Shelf:00 passed.

There are no suspect cards.
```

If the RTS command	Do
passed	step 55
failed	step 67

55 To access the ENET SHELF level of the MAP, type

>SHELF 0

and press the Enter key.

56 To busy all crosspoint cards on the shelf, type

>BSY plane_no ALL

and press the Enter key.

plane_no
is the ENET plane number (0 or 1)

57 To return all crosspoint cards on the shelf to service, type

>RTS plane_no ALL

and press the Enter key.

plane_no
is the ENET plane number (0 or 1)

Example of a MAP response:

```
Request to RTS ALL ENET Plane:1 Shelf:00 submitted.
Request to RTS ALL ENET Plane:1 Shelf:00 completed.
```

58 To access the ENET SYSTEM level of the MAP display, type

>SYSTEM

and press the Enter key.

59 To clear the deload condition on all crosspoint cards in the plane, type

>DELOAD plane_no 0 CLEAR

System cards in a SuperNode SE 32k ENET (continued)

and press the Enter key.

where

plane_no
is the ENET plane number (0 or 1)

Example of a MAP response:

```
Request to CLEAR DELOAD ENET Plane:0 Shelf:00 submitted.
Request to CLEAR DELOAD ENET Plane:0 Shelf:00 passed.
```

60 The next action depends if you recorded a list of deloaded cards in step 8.

If you	Do
recorded a card list	step 61
did not record a card list	step 64

61 To access the SHELF level of the MAP display, type

>SHELF 0

and press the Enter key.

62 To set the first card on the list to the deloaded state, type

>DELOAD plane_no slot_no SET

and press the Enter key.

where

plane_no
is the ENET plane number (0 or 1)

slot_no
is the slot number (8 to 32)

If all the cards on the list	Do
are deloaded	step 63
are not deloaded	step 64

63 Repeat step 62 for the next card on the list.

64 The next action depends on the reason that you perform this procedure.

If a maintenance procedure	Do
directed you to this procedure	step 65
did not direct you to this procedure	step 68

65 Return to the maintenance procedure that directed you to this procedure and continue as directed.

System cards in a SuperNode SE 32k ENET (continued)

66 This procedure instructs you to deload and manually busy a node. Continue this procedure only under special conditions because the mate node has deloaded cards. Consult office personnel or the next level of support. Continue as directed.

67 For additional help, contact the next level of support.

68 The procedure is complete.

System cards in a SuperNode SE 32k ENET (continued)

NT9X40BA/BB connector zone numbers

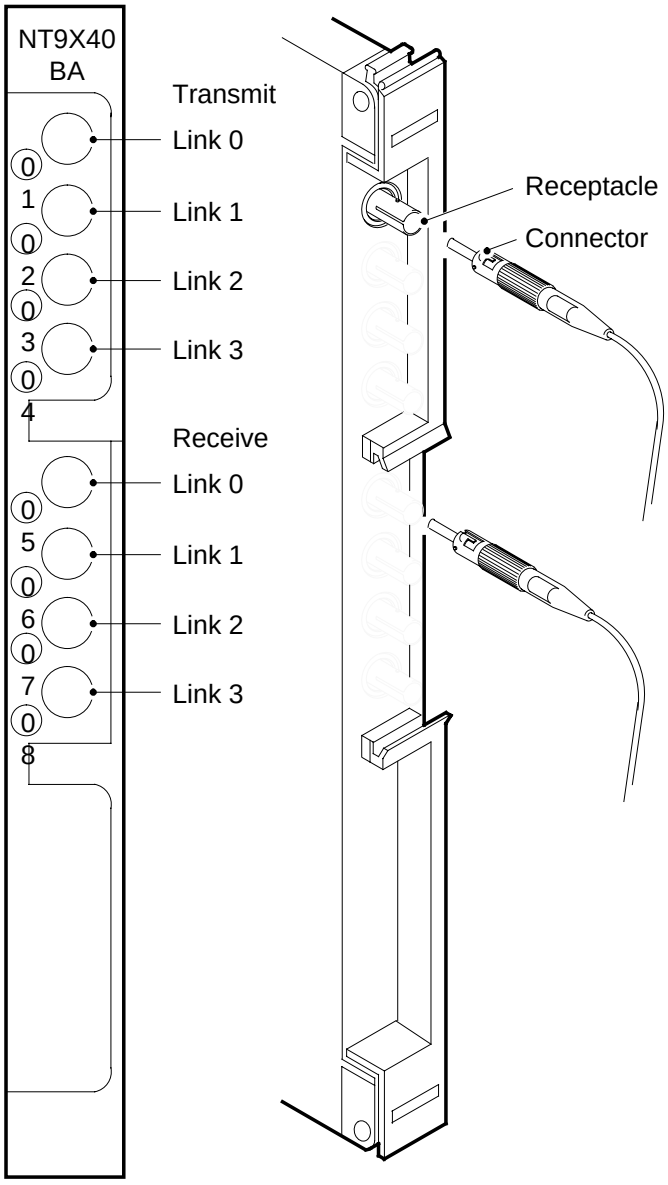

The figure correlates the zone numbers (1 to 8) to the link numbers. The zone numbers appear on the face of the card. The link numbers appear on the MAP display for the NT9X40BA or NT9X40BB interface card. Note that the figure indicates fiber connections only. Observe carefully the zone identification marks for transmit and receive.

System cards in a SuperNode SE 32k ENET (end)

Fiber connector detail

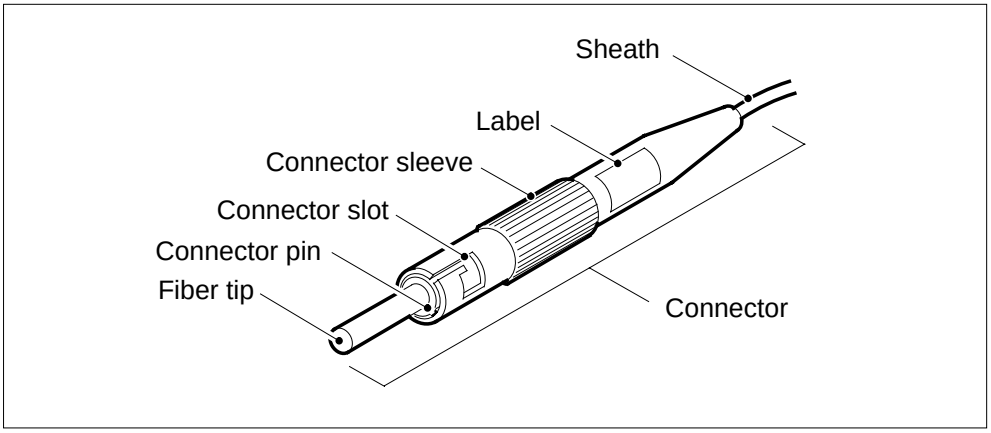

The preceding figure displays the type of connector used to connect fibers to an NT9X40 or NT9X45 paddle board.

Fiber connector and receptacle detail

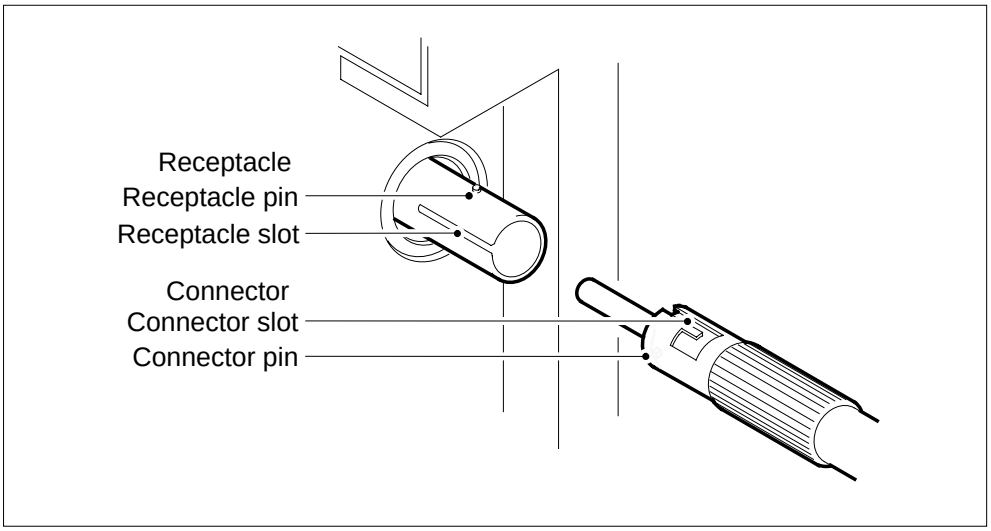

This figure shows the different parts of the connector and receptacle.

7 File processor card replacement procedures

Introduction

This chapter provides card replacement procedures for the file processor (FP). The first section in the chapter provides illustrations of FP shelf designs.

Card replacement procedures for the frame supervisory panel (FSP) and modular supervisory panel (MSP) are in the chapter “Frame supervisory panel and maintenance supervisory panel card replacement procedures".

Each procedure contains the following sections:

- Application
- Common procedures
- Action

Application

This section identifies the FP card(s) the replacement procedure covers.

Common procedures

This section lists common procedures in the FP card replacement procedure. A common procedure is a series of steps that you repeat within maintenance procedures. The procedure for the removal and replacement of a card is an example of a common procedure. Common procedures are in the common procedures chapter in this NTP.

Do not go to the common procedures unless the step-action procedure directs you.

Action

This procedure contains a summary flowchart and a list of steps. Use the flowchart to review the procedure. Follow the steps to perform the procedure.

Recording card replacement activities

When you replace a card, record the following information in office records:

- the serial number of the card you replaced
- the date you replaced the card
- the reason you replaced the card

SuperNode Multicomputing Base shelf layouts

Application

This procedure contains the following design diagrams:

- application processor cabinet (APC)
- file processor (FP) shelf
- FP storage device shelf

Figure 1Application processor cabinet with FP

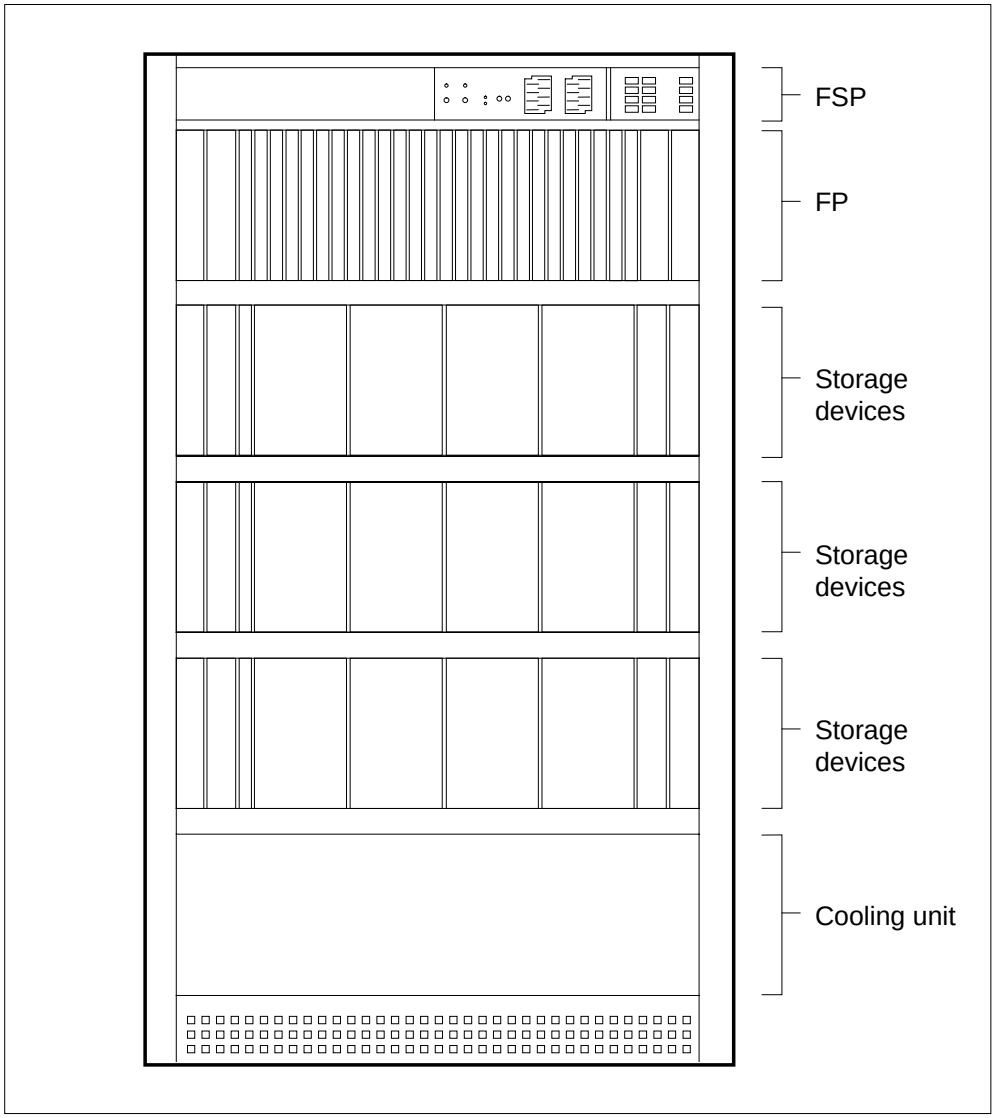

SuperNode Multicomputing Base shelf layouts (continued)

Figure 2File processor shelf

Rear	Paddle boards	Cards	Front
		NTDX15AA Power converter	36F
		NTDX15AA Power converter	33F
32R	NT9X19BA Filler faceplate	NT9X19AA Filler faceplate	32F
31R	NT9X21AB Bus terminator	NT9X14DB 24-Mbyte memory	31F
30R	NT9X19BA Filler faceplate	NT9X14DB 24-Mbyte memory	30F
29R	NT9X19BA Filler faceplate	NT9X14DB 24-Mbyte memory	29F
28R	NT9X19BA Filler faceplate	NT9X14DB 24-Mbyte memory	28F
27R	NT9X62AA 2-port subrate DS512	NT9X86AA Dual-port message controller	27F
26R	NT9X26AA Remote terminal I/F	NT9X13LA AP/FP 68030 HPM-based CPU	26F
25R	NT9X26AA Remote terminal I/F	NT9X13LA AP/FP 68030 HPM-based CPU	25F
24R	NT9X62AA 2-port subrate DS512	NT9X86AA Dual-port message controller	24F
23R	NT9X19BA Filler faceplate	NT9X14DB 24-Mbyte memory	23F
22R	NT9X19BA Filler faceplate	NT9X14DB 24-Mbyte memory	22F
21R	NT9X19BA Filler faceplate	NT9X14DB 24-Mbyte memory	21F
20R	NT9X21AB Bus terminator	NT9X14DB 24-Mbyte memory	20F
19R	NT9X21AB Bus terminator	NT9X14DB 24-Mbyte memory	19F
18R	NT9X19BA Filler faceplate	NT9X14DB 24-Mbyte memory	18F
17R	NT9X88AA SCSI I/F processor	NT9X14DB 24-Mbyte memory	17F
16R	NT9X88AA SCSI I/F processor	NT9X87AA Dual-access buffer memory	16F
15R	NT9X62AA 2-port subrate DS512	NT9X86AA Dual-port message controller	15F
14R	NT9X26AA Remote terminal I/F	NT9X13LA AP/FP 68030 HPM-based CPU	14F
13R	NT9X26AA Remote terminal I/F	NT9X13LA AP/FP 68030 HPM-based CPU	13F
12R	NT9X62AA 2-port subrate DS512	NT9X86AA Dual-port message controller	12F
11R	NT9X88AA SCSI I/F processor	NT9X87AA Dual-access buffer memory	11F
10R	NT9X88AA SCSI I/F processor	NT9X14DB 24-Mbyte memory	10F
09R	NT9X19BA Filler faceplate	NT9X14DB 24-Mbyte memory	09F
08R	NT9X21AB Bus terminator	NT9X14DB 24-Mbyte memory	08F
07R	NT9X19BA Filler faceplate	NT9X19AA Filler faceplate	07F
		NTDX15AA Power converter	04F
		NTDX15AA Power converter	01F

SuperNode Multicomputing Base shelf layouts (end)

Figure 3File processor storage device shelf

	Paddle boards		*Cards*		
			NTDX91	Power converter card	36F
			NTDX91	Power converter card	33F
32R	NT9X19	Filler faceplate	NT9X19	Filler faceplate	32F
31R	NT9X19	Filler faceplate			31F
30R	NT9X19	Filler faceplate			30F
29R	NT9X19	Filler faceplate			29F
28R	NT9X19	Filler faceplate			28F
27R	NT9X89	SDIP			27F
26R	NT9X89	SDIP	NT9X90	Storage device assembly	26F
25R	NT9X19	Filler faceplate			25F
24R	NT9X19	Filler faceplate			24F
23R	NT9X19	Filler faceplate			23F
22R	NT9X19	Filler faceplate			22F
21R	NT9X89	SCSI device I/F PB			21F
20R	NT9X89	SCSI device I/F PB	NT9X90	Storage device assembly	20F
19R	NT9X19	Filler faceplate			19F
18R	NT9X19	Filler faceplate			18F
17R	NT9X19	Filler faceplate			17F
16R	NT9X19	Filler faceplate			16F
15R	NT9X89	SCSI device I/F PB			15F
14R	NT9X89	SCSI device I/F PB	NT9X90	Storage device assembly	14F
13R	NT9X19	Filler faceplate			13F
12R	NT9X19	Filler faceplate			12F
11R	NT9X19	Filler faceplate			11F
10R	NT9X19	Filler faceplate			10F
09R	NT9X89	SCSI device I/F PB			09F
08R	NT9X89	SCSI device I/F PB	NT9X90	Storage device assembly	08F
07R	NT9X19	Filler faceplate	NT9X19AA	Filler faceplate	07F
			NTDX91	Power converter card	04F
			NTDX91	Power converter card	01F

Rear *Front*

NT9X89
in a storage device shelf in a file processor

Application

Use this procedure to replace a NT9X89 in a storage device shelf for a SuperNode Multicomputing Base (SMB) file processor (FP). The following table lists the SMB FP.

PEC	Suffix	Card name	Shelf or frame name
NT9X89	AA, BA	SCSI device interface paddle board	FP storage device

Refer to the “Index" if you cannot identify the following features for the card you want to replace:

- product engineering code (PEC)
- PEC suffix
- provisioned shelf
- provisioned frame

The “Index" contains a list of the cards, shelves, and frames documented in this card replacement book.

Common procedures

This procedure refers to the following common procedures:

- *Verifying load compatibility of SuperNode cards*
- *Replacing a card*

Do not go to the common procedure unless the step-action procedure directs you.

Action

This procedure contains a summary flowchart and a list of steps. Use the flowchart to review the procedure. Follow the steps to perform the procedure.

NT9X89
in a storage device shelf in a file processor (continued)

Replacing a NT9X89in a storage device shelf in a file processor

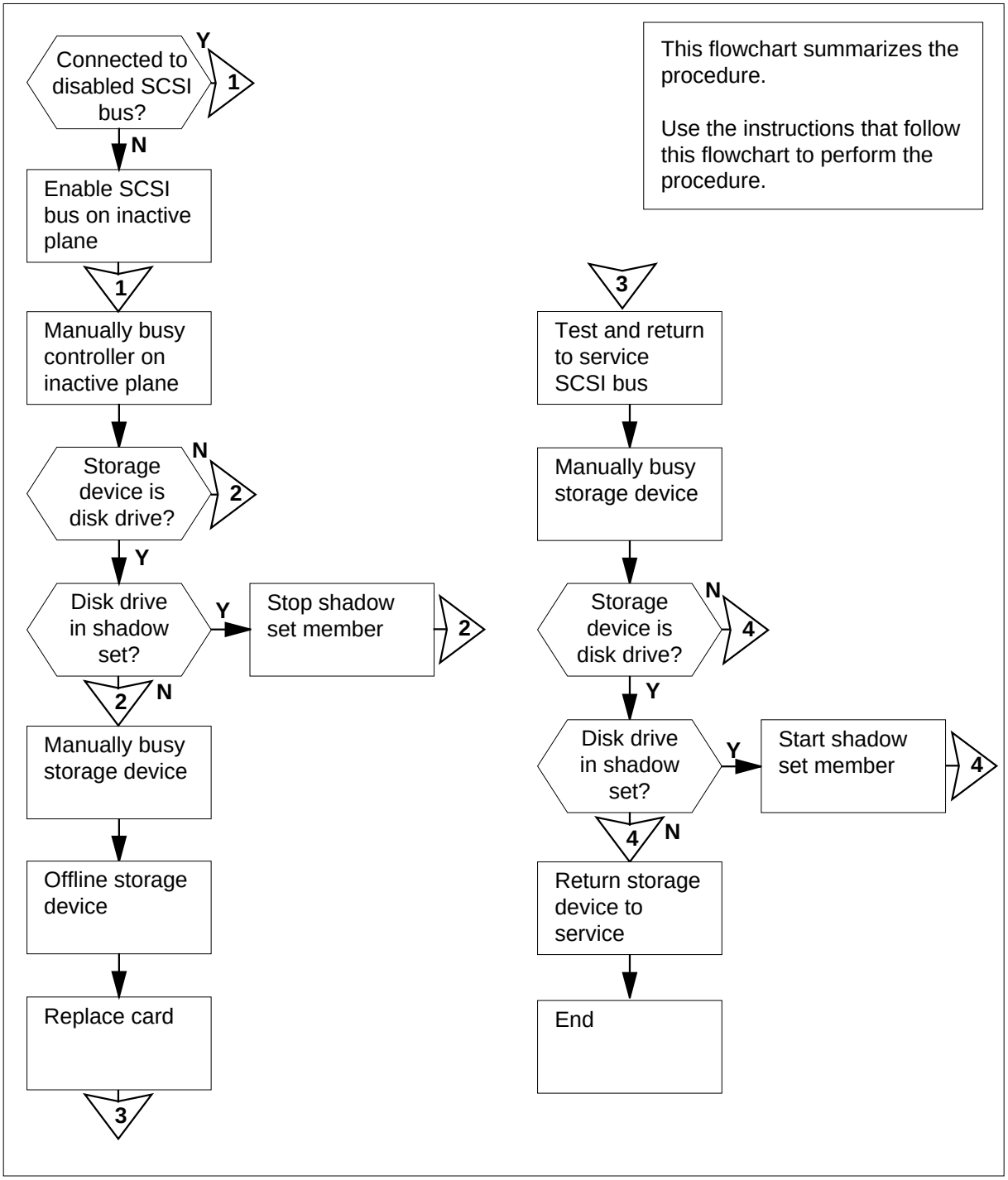

NT9X89
in a storage device shelf in a file processor (continued)

Replacing a NT9X89 in a storage device shelf in a file processor

At your Current Location

1 Obtain a replacement card. Make sure the replacement card and the card you remove have the same PEC and PEC suffix.

2 Perform the procedure *Verifying load compatibility of SuperNode cards* in this document. You must perform this procedure to make sure that the replacement card is compatible with the software load. Complete the procedure and return to this point.

At the MAP terminal

3 To post the FP that contains the card you replace, type

>MAPCI;MTC;PM;POST FP fp_no

and press the Enter key.

where

fp_no
is the number of the FP (0 to 99) that contains the card you will replace

Example of a MAP display:

```
         SysB    ManB    OffL    CBsy    ISTb    InSv
 PM        0       0      14       0       5      11
 FP        0       0       2       0       5       4


FP 20:    FP20_QPI0     Plane   Devices
ISTb                    NoSync    1SysB
```

4 To access the Devices level of the MAP display, type

>DEVICES

and press the Enter key.

Example of a MAP display:

```
FP 3:     FP3_SR256    Plane      Devices
ISTb                    NoSync  .

           CTRL0        CTRL1         DEVICE
DABM         .            .          0 1 2 3 4 5
SCSI 0      .(EN)        .(DIS)       - . - . - -
SCSI 1      .(EN)        .(DIS)       - .  - . - -
```

NT9X89
in a storage device shelf in a file processor (continued)

5 Determine if the NT9X89 card you replace connects to an enabled (EN) or disabled (DIS) SCSI bus.

If the SCSI bus	Do
is enabled	step 6
is disabled	step 7

Note: The EN indicates the SCSI bus is enabled. The DIS indicates the SCSI bus is disabled. CTRL0 (controller 0) corresponds to plane 0 and CTRL1 corresponds to plane 1. The MAP display in step 4 indicates that both SCSI buses on plane 0 are enabled. The MAP display also indicates that both SCSI buses on plane 1 are disabled.

6 To switch enable the SCSI bus that associates with the NT9X89 card you replace, type

>SWEN scsi_no

and press the Enter key.

where

scsi_no
is the number of the enabled SCSI bus (0 or 1)

Example of a MAP response:

```
FP 1 SwEn SCSI 0: Command request has been submitted.

FP 1 SwEn SCSI 0: Command passed.
```

If the SWEN command	Do
passed	step 7
failed	step 33

7 To manually busy the disabled SCSI bus, type

>BSY SCSI scsi_no

and press the Enter key.

where

scsi_no
is the number of the disabled SCSI bus (0 or 1)

Example of a MAP response:

NT9X89
in a storage device shelf in a file processor (continued)

```
FP 1 Busy SCSI 0: Command request has been submitted.
FP 1 Busy SCSI 0: Command passed.
```

If the BSY command	Do
passed	step 8
failed	step 33

8 To query the SCSI components of the FP, type

>QUERYFP SCSI scsi_no

and press the Enter key.

where

scsi_no
is the number of the disabled SCSI bus (0 or 1)

Example of a MAP response:

```
Card Firmware Ctrl SCSI Dev Quad Shelf Slot Status
---- -------- ---- ---- --- ---- ----- ---- ------
SIP  SXFW35CV   0    0   -    0     0   11   InSv
SDIP 910822     0    0   0    0     3    8   SysB
SIP  SXFW35CV   1    0   -    1     0   16   InSv
SDIP 910822     1    0   0    0     3    9   InSv
```

9 Record the following information for the NT9X89 card (SDIP) you replace:

- SCSI number
- device number
- quadrant location
- shelf number
- slot number

Note: The SCSI number appears under the SCSI header in the MAP response example in step 8. The device number appears under the Dev header. The quadrant number appears under the Quad header. The shelf number appears under the Shelf header. The slot number appears under the Slot header.

10 To query the device that associates with the NT9X89 card that you replace, type

>QUERYFP DEV scsi_no dev_no

and press the Enter key.

where

scsi_no
is the SCSI number (0 or 1) you recorded in step 9

NT9X89
in a storage device shelf in a file processor (continued)

dev_no
is the device number you recorded in step 9

Example of a MAP response:

```
Dev Name SCSI Dev Type Quad Shelf Slot Status
-------- ----  --- ---- ---- ----- ---- ------

DK00       0   0   dk    0     3    8   InSv
```

11 Record the following information for the storage device that associates with the NT9X89 card (SDIP) you replace:

- device name
- device type

Note: The device name appears under the Dev Name header of the MAP response that the system generated in step 10. The device type appears under the Type header.

If the device type	Do
is `dk`	step 12
is `ct`	step 17

12 Determine if the disk drive is a member of a shadow set.

Note: Shadow sets are datafilled in table SHADOW.

If the disk drive	Do
is a member of a shadow set	step 13
is not a member of a shadow set	step 17

13 Determine the name of the shadow set.

14 To access the shadow utility for the FP on which the disk drive resides, type

`>SHADOWUT FP fp_no`

and press the Enter key

where

fp_no
is the number of the FP (0 to 99) that contains the disk drive

Example of a MAP response:

```
FP22 is now node of reference
Disk shadowing utility is now active
SHADOWUT; FP22
```

NT9X89
in a storage device shelf in a file processor (continued)

15 To stop the shadow set member, type

>STM ss_name device_name

and press the Enter key.

where

ss_name
is the name of the shadow set (SS00 or SS01)

device_name
is the device name you recorded in step 11

Example input:

>STM SS00 DK02

Example of a MAP response:

```
*****************************************************
**
*** WARNING:                                       ***
***   If this is the last in-service member then File ***
***   Processing will no longer be available on the   ***
***   shadow set: SS00                                ***
*****************************************************
**
Do you wish to proceed?
Please confirm ("Yes", "Y", "No", or "N"):
```

16 To confirm the command, type

>YES

and press the Enter key.

Example of a MAP response:

```
Ok, Shadow Set Member stopped.
Approximately 1 minute to complete.
```

Go to step 18.

17 To manually busy the storage device, type

>BSY DEV scsi_no dev_no

and press the Enter key.

where

scsi_no
is the SCSI number you recorded in step 9

dev_no
is the device number you recorded in step 9

Example input:

>BSY DEV 0 1

NT9X89
in a storage device shelf in a file processor (continued)

Example of a MAP response:

```
FP 1 Busy DEV 0 1:
Command request has been submitted.
FP 1 Busy DEV 0 1: Command passed.
```

If the BSY command	Do
passed	step 18
failed	step 33

18 To offline the device, type

>OFFL DEV scsi_no dev_no

and press the Enter key.

where

scsi_no
is the SCSI number you recorded in step 9

dev_no
is the device number you recorded in step 9

Example input:

>OFFL DEV 0 1

Example of a MAP response:

```
FP 1 Offline DEV 0 1: Command request has been
submitted.
FP 1 Offline DEV 0 1: Command passed.
```

If the OFFL command	Do
passed	step 19
failed	step 33

At the storage device shelf

19 Locate the NT9X89 card that you must replace.

20 Determine the state of the LEDs on the card.

If	Do
no LEDs are lit	step 21
one or both LEDs are lit	step 33

NT9X89
in a storage device shelf in a file processor (continued)

21 Loosen the two screws that secure the connector to the back of the card.

22 To replace the card, perform the procedure *Replacing a card* in this document. Complete the procedure and return to this point.

23 Tighten the screws that secure the connector at the back of the card.

At the MAP terminal

24 To test the SCSI bus you busied in step 7, type

>TST SCSI scsi_no

and press the Enter key.

where

scsi_no
is the number of the disabled SCSI bus (0 or 1)

Example of a MAP response:

```
FP 1 Test DEV 0 1: Command request has been submitted.
FP 1 Test DEV 0 1: Command passed.
```

If the TST command	Do
passed	step 25
failed	step 33

25 To return the SCSI bus to service, type

>RTS SCSI scsi_no

and press the Enter key.

where

scsi_no
is the number of the disabled SCSI bus (0 or 1)

Example of a MAP response:

```
FP 1 RTS DEV 0 1: Command request has been submitted.
FP 1 RTS DEV 0 1: Command passed.
```

If the RTS command	Do
passed	step 26
failed	step 33

26 To manually busy the storage device you offlined in step 18, type

>BSY DEV scsi_no dev_no

NT9X89
in a storage device shelf in a file processor (continued)

and press the Enter key.

where

scsi_no
is the SCSI number you recorded in step 9

dev_no
is the device number you recorded in step 9

Example input:

>BSY DEV 0 1

Example of a MAP response:

```
FP 1 Busy DEV 0 1: Command request has been submitted.
FP 1 Busy DEV 0 1:
Command passed.
```

If the BSY command	Do
passed	step 27
failed	step 33

27 Determine the type of storage device you busied in step 17.

If the device type	Do
is dk	step 28
is ct	step 32

28 Determine if the disk drive is a member of a shadow set.

If the disk drive	Do
is a member of a shadow set	step 29
is not a member of a shadow set	step 32

29 To start the shadow set member, type

>SM ss_name device_name FORCE

and press the Enter key.

where

ss_name
is the name of the shadow set (SS00 or SS01)

device_name
is the name of the shadow set member you stopped in step 15

NT9X89
in a storage device shelf in a file processor (continued)

Example input:

>SM SS00 DK02 FORCE

Example of a MAP response:

```
The member will be started with the following
parameter settings:

Node name      : FP2
Shadow set name: SS00
Device name    : DK02
Transfer length: Optimal
Interval       : 0
Synchronization: Default
Force          : NO

Do you want to continue?
Please confirm ("YES", "Y", "NO", or "N"):
```

30 To confirm the command, type

>YES

and press the Enter key.

Example of a MAP response:

```
OK, Shadow Set Member start initiated.
```

If the SM command	Do
passed	step 31
failed	step 33

31 To quit the shadow utility, type

>QUIT

and press the Enter key.

Go to step 34.

32 To return the device to service, type

>RTS DEV scsi_no dev_no

and press the Enter key.

where

scsi_no
is the SCSI number you recorded in step 9

dev_no
is the device number you recorded in step 9

NT9X89
in a storage device shelf in a file processor (end)

Example of a MAP response:

```
FP 1 RTS DEV 0 1: Command request has been submitted.
FP 1 RTS DEV 0 1: Command passed.
```

If the RTS command	Do
passed	step 34
failed	step 33

33 For additional help, contact the next level of support.

34 The procedure is complete.

NT9X90
in a storage device shelf in a file processor

Application

Use this procedure to replace an NT9X90 in a storage device shelf for a SuperNode Multicomputing Base (SMB) file processor (FP). The following table lists the SMB FP.

PEC	Suffix	Card name	Shelf or frame name
NT9X90	AA	Storage device assembly (600-Mbyte disk)	FP storage device
NT9X90	AB	Storage device assembly (2.1-Gbyte disk)	FP storage device
NT9X90	BA	Storage device assembly (1.2-Gbyte DAT)	FP storage device

Refer to the “Index" if you cannot identify the following features for the card you want to replace:

- product engineering code (PEC)
- PEC suffix
- provisioned shelf
- provisioned frame

The “Index" contains a list of the cards, shelves, and frames documented in this card replacement book.

Common procedures

This procedure refers to the following common procedure:

- *Verifying load compatibility of SuperNode cards*

Do not go to the common procedure unless the step-action procedure directs you.

Action

This procedure contains a summary flowchart and a list of steps. Use the flowchart to review the procedure. Follow the steps to perform the procedure.

NT9X90
in a storage device shelf in a file processor (continued)

Summary of Replacing a NT9X90 in a storage device shelf in a file processor

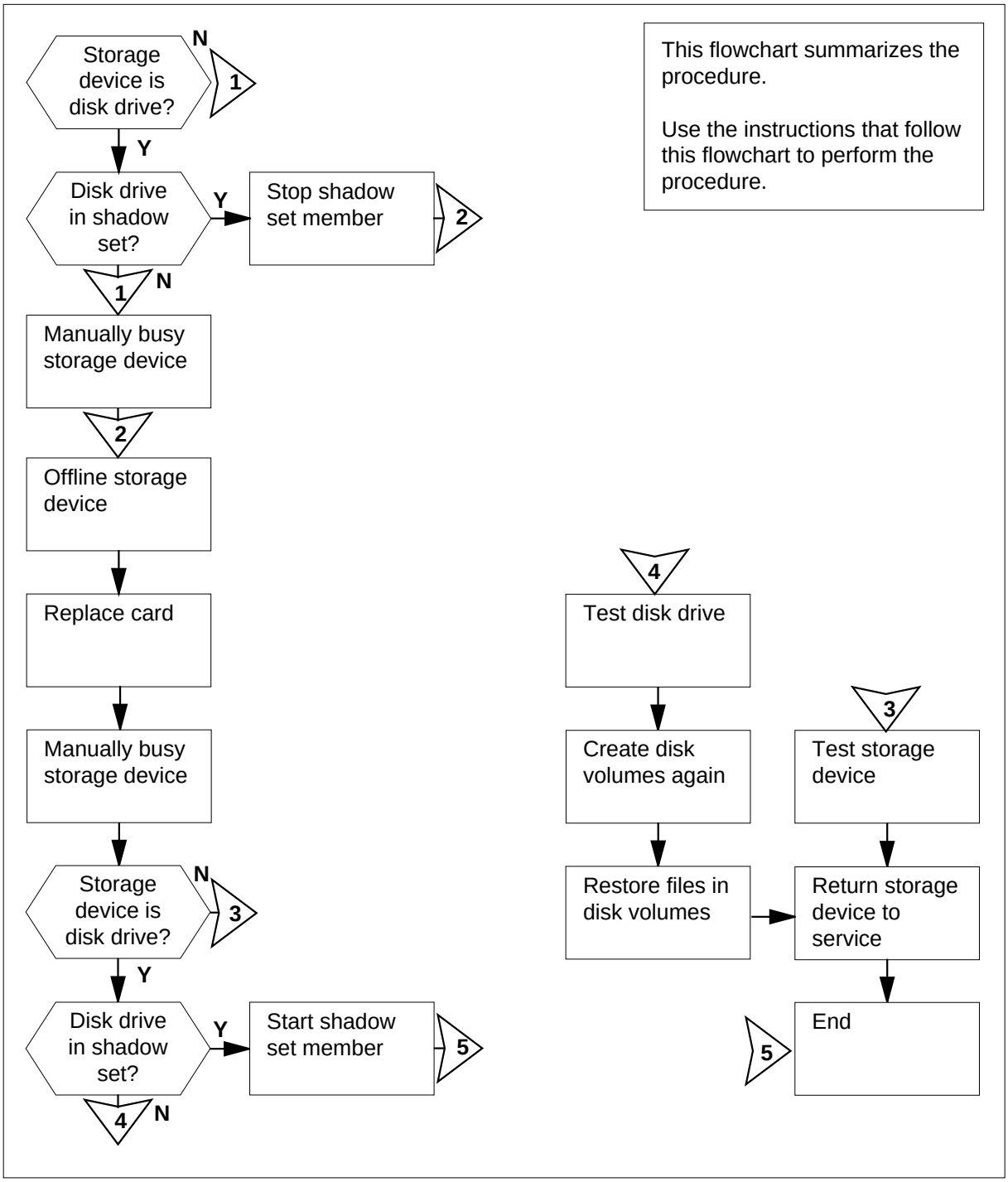

NT9X90
in a storage device shelf in a file processor (continued)

Replacing a NT9X90 in a storage device shelf in a file processor

At your current location

1 Obtain a replacement card. Make sure that the replacement card and the card you remove have the same PEC and PEC suffix.

2 Perform the procedure *Verifying load compatibility of SuperNode cards* in this document. You must perform this procedure to make sure that the replacement card is compatible with the software load. Complete the procedure and return to this point.

At the MAP terminal

3 To post the FP that contains the card you will replace, type

>MAPCI;MTC;PM;POST FP fp_no

and press the Enter key.

where

fp_no
is the number of the FP (0 to 99) that contains the card you will replace

Example of a MAP display:

```
        SysB    ManB    OffL    CBsy    ISTb   InSv
PM        0       0      14       0       5     11
FP        0       0       2       0       5      4


FP 20:    FP20_QPI0     Plane   DevicesISTb
NoSync    1SysB
```

4 To access the Devices level of the MAP display, type

>DEVICES

and press the Enter key.

Example of a MAP display:

```
 FP 3:        FP3_SR256     Plane     Devices
 ISTb                         NoSync  .

               CTRL0         CTRL1       DEVICE
 DABM             .            .        0 1 2 3 4 5
 SCSI 0           .(EN)        .(DIS)   - . - . - -
 SCSI 1           .(EN)        .(DIS)   - . - . - -
```

5 To query the device components for the FP, type

>QUERYFP DEV ALL ALL

and press the Enter key.

NT9X90
in a storage device shelf in a file processor (continued)

Example of a MAP response:

```
Dev Name SCSI Dev Type Quad Shelf Slot Status
-------- ---- --- ---- ---- ----- ---- ------
DK00       0   0   dk    0     2    8   InSv
CT01       0   1   ct    2     2   20   InSv
DK02       0   2   dk    0     3    8   InSv
DK03       0   3   dk    2     3   20   InSv
DK10       1   0   dk    1     2   14   SysB
CT11       1   1   ct    3     2   26   InSv
DK12       1   2   dk    1     3   14   InSv
DK13       1   3   dk    3     3   26   InSv
```

6 In the MAP display the system generated in step 5, identify the device you will replace. Record the following information for the device:

- SCSI number
- device number
- device type
- quadrant location
- shelf number
- slot number

Note: The SCSI number appears under the SCSI header on the MAP display. The device number appears under the Dev header. The device type appears under the Type header. The quadrant location appears under the Quad header. The shelf number appears under the Shelf header. The slot number appears under the Slot header.

If the device	Do
is `dk`	step 7
is `ct`	step 16

7 The next action depends on why you perform this procedure.

If	Do
the procedure *Recovering disks in a shadow set after loss of both disks* directed you to this procedure	step 18
other than listed here	step 8

NT9X90
in a storage device shelf in a file processor (continued)

8 Determine if the disk drive is a member of a shadow set.

Note: Datafill shadow sets in table SHADOW.

If the disk drive	Do
is a member of a shadow set	step 9
is not a member of a shadow set	step 16

9 Determine the name of the shadow set.

Note: When you display and record the shadow set name, the SCP recovery procedure directs you to this procedure. The SCP recovery procedure is *Recovering disks in a shadow set after loss of one disk*.

10 To access the shadow utility for the FP that contains the disk drive, type

>SHADOWUT FP fp_no

and press the Enter key.

where

fp_no
is the number of the FP (0 to 99) that contains the disk drive

11 To display information on the shadow set, type

>DIS ss_name

and press the Enter key.

where

ss_name
is the name of the shadow set (SS00 or SS01)

Example of a MAP response:

```
Information about shadow set #0:

Node name:                FP2
Shadow set name              SS00
Set definition state:        RUNNING
Set operational state:       IN SERVICE
Synchronization status:      SYNCHRONIZED
Multi-Writes:             Serial
Capacity (blocks)            1244655
Transfer length              Optimal
Interval:                 0

==============================================
Information about member disks:

    Name      State    SyncState    Reads  Writes
     DK02      INSV       Yes
Perm DK13      INSV       Yes         0       0
```

NT9X90
in a storage device shelf in a file processor (continued)

12 Record the shadow set member that has faults.

Note: In the MAP display example in step 11, the shadow set member that has faults is DK02.

13 To stop the shadow set member, type

>STM ss_name device_name

and press the Enter key.

where

ss_name
is the name of the shadow set (SS00 or SS01)

device_name
is DK (disk drive) followed by two digits

Example input:

>STM SS00 DK02

Example of a MAP response:

```
*****************************************************
****   WARNING:
****** If this is the last in-service member then File
****** Processing will no longer be available on the
****** shadow set: SS00
**************************************************
 Do you wish to proceed?
 Please confirm ("Yes", "Y", "No", or "N"):
```

14 To confirm the command, type

>YES

and press the Enter key.

Example of a MAP response:

```
Ok, Shadow Set Member stopped.
Approximately 1 minute to complete.
```

15 To quit the shadow utility, type

>QUIT

and press the Enter key.

Go to step 17.

16 To manually busy the device that has faults, type

>BSY DEV scsi_no dev_no

and press the Enter key.

where

NT9X90
in a storage device shelf in a file processor (continued)

scsi_no
is the SCSI number you recorded in step 6

dev_no
is the device number you recorded in step 6

Example of a MAP response:

```
FP 1 Busy DEV 0 1: Command request has been submitted.
FP 1 Busy DEV 0 1: Command passed.
```

If the BSY command	Do
passed	step 17
failed	step 48

17 To offline the affected device, type

>OFFL DEV scsi_no dev_no

and press the Enter key.

where

scsi_no
is the SCSI number you recorded in step 6

dev_no
is the device number you recorded in step 6

Example input:

>OFFL DEV 0 1

Example of a MAP response:

```
FP 1 Offline DEV 0 1: Command request has been submitted.
FP 1 Offline   DEV 0 1: Command passed.
```

If the OFFL command	Do
passed	step 18
failed	step 48

At the storage device shelf

18 Determine the state of both LEDs on the storage device.

If	Do
no LEDs are lit	step 19

NT9X90
in a storage device shelf in a file processor (continued)

If	Do
one or both LEDs are lit	step 48

19 Open the locking levers on the faceplate until the levers are horizontal.

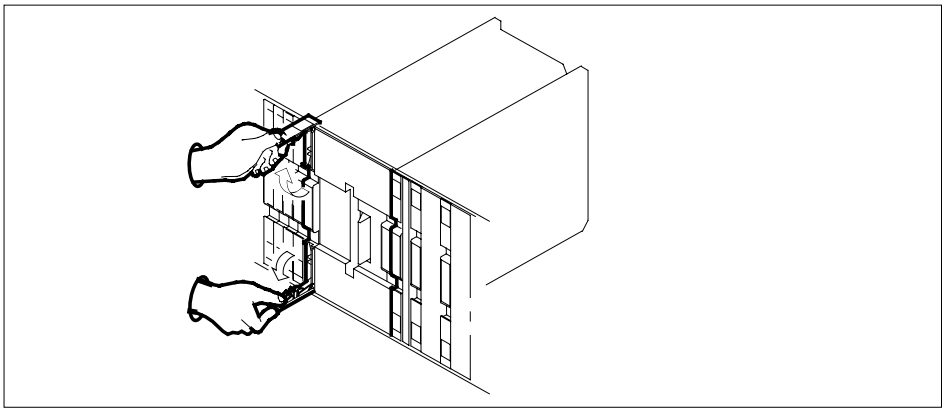

20 Carefully pull the device toward you. Continue to pull until the locking latch at the back of the storage device stops the device from clearing the shelf.

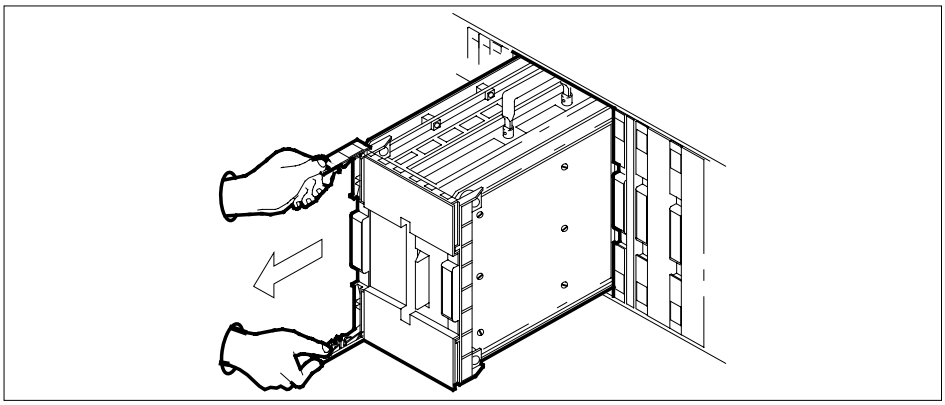

21 Close the locking levers.

22 Grasp the carrying handle for the storage device , and use your thumb to press the locking latch at the same time. Slide the storage device straight out from the shelf.

NT9X90
in a storage device shelf in a file processor (continued)

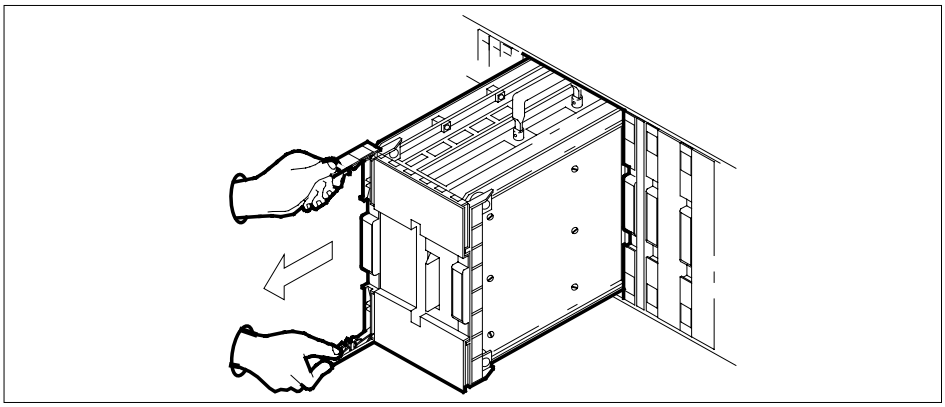

23 Place the storage device in an electrostatic discharge (ESD) protective container.

24 Lift the replacement device by the carrying handle.

25 Open the locking levers until the levers are horizontal.

26 Use your free hand to support and align the storage device with the slots in the shelf. Carefully slide the storage device into the shelf until the locking latch at the back of the device engages the shelf.

27 Use your fingers or thumbs to push on the upper and lower edges of the faceplate. Make sure the device sits completely in the shelf.

28 Close the locking levers.

At the MAP terminal

29 To manually busy the device you offlined in step 17, type

`>BSY DEV scsi_no dev_no`

and press the Enter key.

where

scsi_no
is the SCSI number you recorded in step 6

dev_no
is the device number you recorded in step 6

If the BSY command	Do
passed	step 30
failed	step 48

NT9X90
in a storage device shelf in a file processor (continued)

30 Determine the type of device you replaced.

If the device type	Do
is `dk`	step 31
is `ct`	step 46

31 Determine if the disk drive is a member of a shadow set.

If the disk drive	Do
is a member of a shadow set	step 32
is not a member of a shadow set	step 36

32 To access the shadow utility for the FP that contains the disk drive, type

`>SHADOWUT FP fp_no`

and press the Enter key.

where

fp_no
is the number of the FP (0 to 99) that contains the disk drive

33 To start the shadow set member you stopped in step 13, type

`>SM ss_name device_name FORCE`

and press the Enter key.

where

ss_name
is the name of the shadow set (SS00 or SS01)

device_name
is DK (disk drive) followed by two digits

Example input:

`>SM SS00 DK02 FORCE`

Example of a MAP response:

NT9X90
in a storage device shelf in a file processor (continued)

```
The member will be started with the following parameter
settings:

Node name      : FP2
Shadow set name: SS00
Device name    : DK02
Transfer length: Optimal
Interval       : 0
Synchronization: Default
Force          : NO

Do you want to continue?
Please confirm ("Yes", "Y", "No", or "N"):
```

34 To confirm the command, type

>YES

and press the Enter key.

Example of a MAP response:

```
OK, Shadow Set Member start initiated.
```

If the SM command	Do
passed	step 35
failed	step 48

35 To quit the shadow utility, type

>QUIT

and press the Enter key.

Go to step 49.

36 To test the storage device, type

>TST DEV scsi_no dev_no

and press the Enter key.

where

scsi_no
is the SCSI number you recorded in step 6

dev_no
is the device number you recorded in step 6

Example of a MAP response:

NT9X90
in a storage device shelf in a file processor (continued)

FP 1 Test DEV 0 1: Command request has been submitted.
FP 1 Test DEV 0 1: Command passed.

If the TST command	Do
passed	step 37
failed	step 48

37 To access the disk administration utility, type

>DISKADM disk_name node_name

and press the Enter key.

where

disk_name
is the name of the disk

node_name
is the FP name

Example input:

>DISKADM DK13 FP3

Example of a MAP response:

```
Start up command sequence is in progress.
This may take a few minutes.
Administration of device DK13 on FP3 is now active.
DISKADM;  FP3
```

38 To format the disk, type

>FORMATDISK disk_name

and press the Enter key.

where

disk_name
is the name of the disk

Example of a MAP response:

NT9X90
in a storage device shelf in a file processor (continued)

```
        *****  WARNING  *****

  Formatting of DK13 will
  destroy the contents of the disk.
  The formatting will:
      allocate 3 spare or alternate sectors per track,
      allocate 16 spare or alternate tracks per disk,
      use the G defect list,
      assign DK13 as the name for the disk.
      perform quick format,
      exclude force option.
  Do you want to continue?
  Please confirm ("Yes", "Y", "No", or "N"):
```

39 To confirm the command, type

>YES

and press the Enter key.

40 From your office records, determine the number, size, and type of volumes the replacement disk requires.

41 To create a disk volume, type

>CREATEVOL vol_name vol_size vol_type

and press the Enter key.

where

vol_name
is the name of the disk volume

vol_size
is the size of the volume in Mbytes

vol_type
is the type of volume (STD or FTFS)

Example input:

>CREATEVOL MLSUP 60 FTFS

Example of a MAP response:

```
 FTFS volume MLSUP will be created on DK13.

 Volume size:                    60 megabytes
 First FID table extent size:  32754 entries
 Volume Free Space Map size:   7936 segments

 Do you want to continue?
 Please confirm ("Yes", "Y", "No", or "N"):
```

NT9X90
in a storage device shelf in a file processor (continued)

42 To confirm the command, type

>YES

and press the Enter key.

43 Repeat steps 41 and 42 for each disk volume required.

44 Restore the backup files in the disk drive that has faults to the replacement disk drive volumes.

45 To quit the disk administration utility, type

>QUIT

and press the Enter key.

Go to step 47.

46 To test the device, type

>TST DEV scsi_no dev_no

and press the Enter key.

where

scsi_no
is the SCSI number you recorded in step 6

dev_no
is the device number you recorded in step 6

Example of a MAP response:

```
FP 1 Test DEV 0 1: Command request has been submitted.
FP 1 Test DEV 0 1: Command passed.
```

If the TST command	Do
passed	step 47
failed	step 48

47 To return the device to service, type

>RTS DEV scsi_no dev_no

and press the Enter key.

where

scsi_no
is the SCSI number you recorded in step 6

dev_no
is the device number you recorded in step 6

Example of a MAP response:

NT9X90
in a storage device shelf in a file processor (end)

```
FP 1 RTS DEV 0 1: Command request has been submitted.
FP 1 RTS DEV 0 1: Command passed.
```

If the RTS command	Do
passed	step 49
failed	step 48

48 For additional help, contact the next level of support.

49 The procedure is complete.

NT9X91
in a storage device shelf in a file processor

Application

Use this procedure to replace an NT9X91 in a storage device shelf for a SuperNode Multicomputing Base (SMB) file processor (FP). The following table lists the SMB FP.

PEC	Suffix	Card name	Shelf or frame name
NT9X91	AA	Storage device power converter	FP storage device
NT9X91	AB	Power converter +5 V +12 V	FP storage device

Refer to the “Index" if you cannot identify the following features for the card you want to replace:

- product engineering code (PEC)
- PEC suffix
- provisioned shelf
- provisioned frame

The “Index" contains a list of the cards, shelves, and frames documented in this card replacement book.

Common procedures

This procedure refers to the following common procedures:

- *Verifying load compatibility of SuperNode cards*
- *Replacing a card*

Do not go to the common procedure unless the step-action procedure directs you to go.

Action

This procedure contains a summary flowchart and a list of steps. Use the flowchart to review the procedure. Follow the steps to perform the procedure.

NT9X91
in a storage device shelf in a file processor (continued)

Summary of Replacing a NT9X91 in a storage device shelf in a file processor

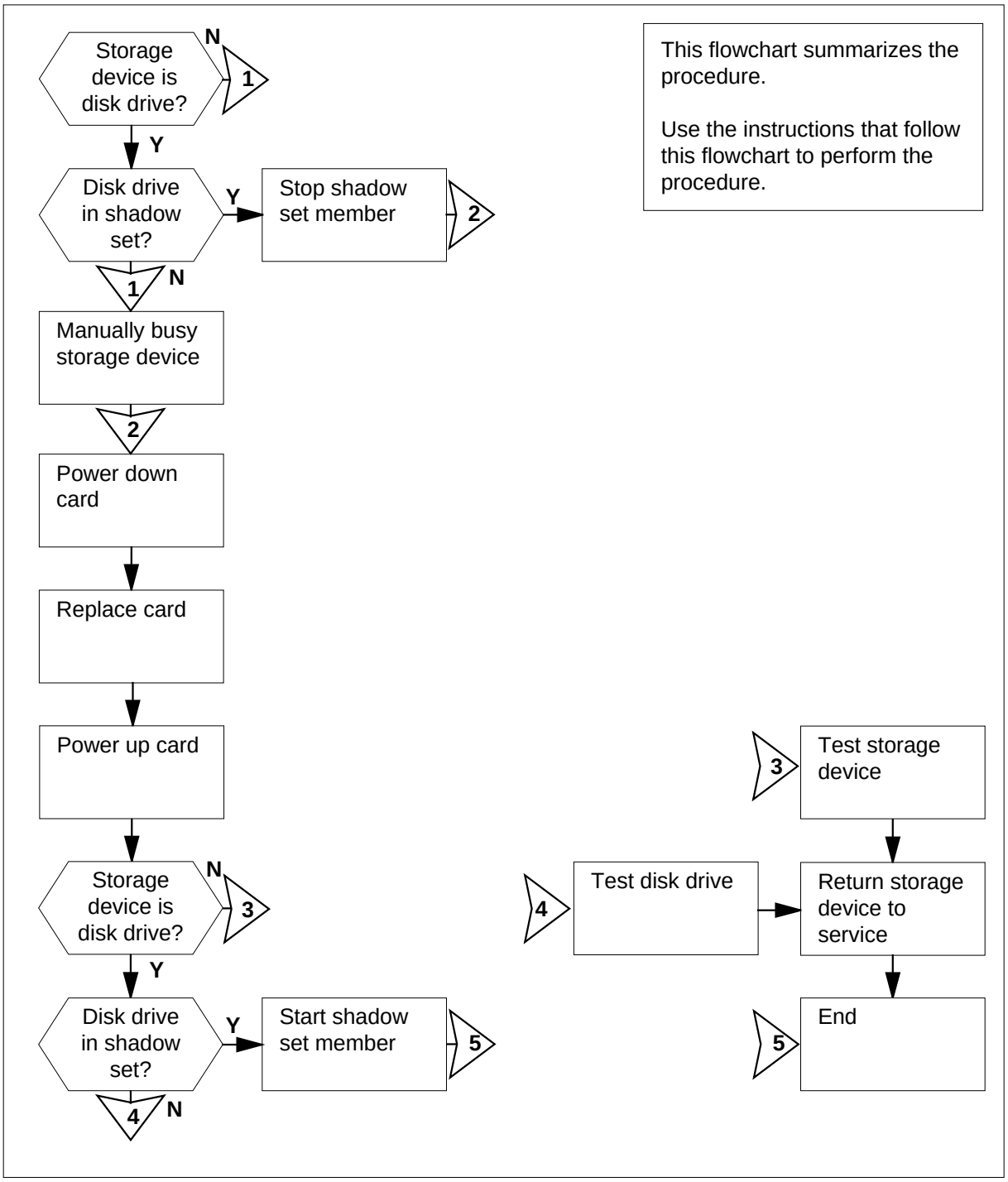

NT9X91
in a storage device shelf in a file processor (continued)

Replacing a NT9X91 in a storage device shelf in a file processor

At your current location

1 Obtain a replacement card. Make sure the replacement card and the card you replace have the same PEC and PEC suffix.

2 Perform the procedure *Verifying load compatibility of SuperNode cards* in this document. You must perform this procedure to make sure that the replacement card is compatible with the software load. Complete the procedure and return to this point.

At the MAP terminal

3 To post the FP that contains the card you will replace, type

`>MAPCI;MTC;PM;POST FP fp_no`

and press the Enter key.

where

fp_no
is the number of the FP (0 to 99) that contains the card you will replace

Example of a MAP display:

```
            SysB    ManB    OffL    CBsy    ISTb   InSv
PM           0       0      14       0       5      11
FP           0       0       2       0       5       4


FP 20:    FP20_QPI0     Plane   DevicesISTb
NoSync    1SysB
```

4 To access the Devices level of the MAP display, type

`>DEVICES`

and press the Enter key.

Example of a MAP display:

```
FP 3:               FP3_SR256  Plane       Devices
ISTb                           NoSync  .
                     CTRL0     CTRL1        DEVICE
DABM                   .         .         0 1 2 3 4 5
SCSI 0                 .(EN)     .(DIS)    - . - . - -
SCSI 1                 .(EN)     .(DIS)    - . - . - -
```

NT9X91
in a storage device shelf in a file processor (continued)

At the MAP terminal

5 To post the device that the NT9X91 card powers, type

>POSTDEV scsi_bus_no device_no

and press the Enter key.

where

scsi_bus_no
is the number of the SCSI bus (0 or 1)

device_no
is the number of the device (0 to 5)

Example of a MAP display:

```
DK12      Type    DISK         SCSI bus     1  Device    2
Shelf  2  Status  InSv         Shadow set  Use SHADOWUT
Quad   1  Drive   On Line      User        SYSTEM
```

6 To query the device, type

>QRYDEV

and press the Enter key.

Example of a MAP response:

```
Dev Name SCSI Dev Type Quad   Shelf Slot Status
-------- ------- ---- ----   ----- ---- ------
DK00       0   0   dk    0      3    8   InSv
```

7 From the MAP display the system generated in step 6, record the following information for the device:

- SCSI number
- device number
- device type
- quadrant location
- shelf number
- slot number

Note: The SCSI number appears under the SCSI header on the MAP display. The device number appears under the Dev header. The device type appears under the Type header. The quadrant location appears under the Quad header. The shelf number appears under the Shelf header. The slot number appears under the Slot header.

If the device	Do
is `dk`	step 8
is `ct`	step14

NT9X91
in a storage device shelf in a file processor (continued)

8 Determine if the associated disk drive is a member of a shadow set.

Note: Datafill shadow sets in table SHADOW.

If the disk drive	Do
is a member of a shadow set	step 9
is not a member of a shadow set	step 14

9 To access the shadow utility for the FP on which the disk drive resides, type

>SHADOWUT FP fp_no

and press the Enter key.

where

fp_no
is the number of the FP on which the disk drive resides

10 To display information on the shadow set, type

>DIS ss_name

and press the Enter key.

where

ss_name
is the name of the shadow set (SS00 or SS01)

Example of a MAP response:

```
Information about shadow set #0:
Node name:                FP2
Shadow set name:              SS00
Set definition state:         RUNNING
Set operational state:        IN SERVICE
Synchronization status:       SYNCHRONIZED
Multi-Writes:             Serial
Capacity (blocks)             1244655
Transfer length:              Optimal
Interval:                 0
=======================================================
Information about member disks:

     Name          State     SyncState    Reads Writes
     DK02          INSV      Yes
Perm DK13           INSV     Yes            0      0
Information about member disks:
```

If	Do
another shadow set member is in service	step 11
no other shadow set member is in service	step 26

NT9X91
in a storage device shelf in a file processor (continued)

11

> **DANGER**
> **Possible loss of service**
> The removal of this device from service causes a loss of service for applications that use this file processor (FP) node.

To stop the shadow set member that the NT9X91 card powers, type

>STM ss_name device_name

and press the Enter key.

where

ss_name
is the name of the shadow set (SS00 or SS01)

device_name
is DK (disk drive) followed by two digits

Example input:

>STM SS00 DK02

Example of a MAP response:

```
*********************************************************
**** WARNING:                                         ***
***   If this is the last in-service member then File ***
***   Processing will no longer be available on the   ***
***   shadow set: SS00                                ***
*********************************************************
Do you wish to proceed?
Please confirm ("Yes", "Y", "No", or "N"):
```

12 To confirm the response, type

>YES

and press the Enter key.

Example of a MAP response:

```
Ok, Shadow Set Member stopped.

Approximately 1 minute to complete.
```

13 To quit the shadow utility, type

>QUIT

and press the Enter key.

Go to step 15.

NT9X91
in a storage device shelf in a file processor (continued)

14 To manually busy the affected storage device, type

>BSY DEV scsi_no dev_no

and press the Enter key.

where

scsi_no
is the SCSI number you recorded in step 7

dev_no
is the device number you recorded in step 7

Example of a MAP response:

```
FP 1 Busy DEV 0 1: Command request has been submitted.
FP 1 Busy DEV 0 1: Command passed.
```

At the storage device shelf

15

WARNING
Static electricity damage
Wear a wrist strap that connects to the wrist-strap grounding point of a frame supervisory panel (FSP) to handle cards. The wrist strap protects the cards against static electricity damage.

To power down the NT9X91, press down and release the switch on the faceplate of the NT9X91.

If the alarm light on the power converter	Do
lights	step 16
does not light	step 26

16 To replace the card, perform the procedure *Replacing a card* in this document.

17 To power up the power converter, lift and release the power switch on the faceplate.

If the alarm light on the power converter	Do
turns off	step 18
remains on	step 26

NT9X91
in a storage device shelf in a file processor (continued)

18 Determine the type of device you noted in step 7.

If the device	Do
is `dk`	step 19
is `ct`	step 24

19 Determine if the disk drive is a member of a shadow set.

If the disk drive	Do
is a member of a shadow set	step 20
is not a member of a shadow set	step 24

At the MAP terminal

20 To access the shadow utility of the FP that contains the disk drive, type

`>SHADOWUT FP fp_no`

and press the Enter key.

where

fp_no
is the number of the FP (0 to 99) that contains the disk drive

21 To start the shadow set member, type

`>SM ss_name device_name`

and press the Enter key.

where

ss_name is the name of the shadow set (SS00 or SS01)

device_name
is DK (disk drive) followed by two digits

Example input:

`>SM SS00 DK02`

Example of a MAP response:

NT9X91
in a storage device shelf in a file processor (continued)

```
The member will be started with the following
parametersettings:

Node name      : FP2
Shadow set name: SS00
Device name    : DK02
Transfer length: Optimal
Interval       : 0
Synchronization: Default
Force          : NO

Do you want to continue?
Please confirm ("Yes", "Y", "No", or "N"):
```

22 To confirm the command, type

>YES

and press the Enter key.

Example of a MAP response:

```
OK, Shadow Set Member start initiated.
```

If the device	Do
returned to service	step 23
did not return to service	step 26

23 To quit the shadow utility, type

>QUIT

and press the Enter key.

Go to step 27.

24 To test the storage device, type

>TST DEV scsi_no dev_no

and press the Enter key.

where

scsi_no
is the SCSI number you recorded in step 7

dev_no
is the device number you recorded in step 7

Example of a MAP response:

NT9X91
in a storage device shelf in a file processor (end)

```
FP 1 Test DEV 0 1: Command request has been submitted.
FP 1 Test DEV 0 1: Command passed.
```

If the TST command	Do
passed	step 25
failed	step 26

25 To return the storage device to service, type

`>RTS  scsi_no  dev_no`

and press the Enter key.

where

scsi_no
is the SCSI number you recorded in step 7

dev_no
is the device number you recorded in step 7

Example of a MAP response:

```
FP 1 RTS DEV 0 1: Command request has been submitted.
FP 1 RTS DEV 0 1: Command passed.
```

If the RTS command	Do
passed	step 27
failed	step 26

26 For additional help, contact the next level of support.

27 The procedure is complete.

System cards in a file processor

Application

Use this procedure to replace the following cards in a SuperNode Multicomputing Base (SMB) file processor (FP).

PEC	Suffix	Card name	Shelf or frame name
NT9X13	LA	AP/FP 68030 HPM-based CPU card	FP
NT9X14	DB	24-Mbyte memory card	FP
NT9X21	AB	Bus terminator paddle board	FP
NT9X26	AA, AB	Remote terminal interface paddle board	FP
NT9X62	AA	Two-port subrate DS512 paddle board	FP
NT9X86	AA, AB	Two-port message controller card	FP
NT9X87	AA	Two-access buffer memory card	FP
NT9X88	AA	SCSI interface processor paddle board	FP
NTDX15	AA	Power converter ±5 V	FP
NTDX15	AB	Global power converter ±5 V	FP

If you cannot identify the product engineering code (PEC), suffix, or provisioned shelf or frame for the card you want to replace, refer to the Index. The index contains a list of the cards, shelves, and frames documented in this card replacement book.

Refer to the “Index" if you cannot identify the following features for the card you want to replace:

- product engineering code (PEC)
- PEC suffix
- provisioned shelf
- provisioned frame

System cards in a file processor (continued)

The “Index" contains a list of the cards, shelves, and frames documented in this card replacement book.

Common procedures

The procedure refers to the following common procedures:

- *Verifying load compatibility of SuperNode cards*
- *Replacing a card*

Do not go to the common procedure unless the step-action procedure directs you.

Action

This procedure contains a summary flowchart and a list of steps. Use the flowchart to review the procedure. Follow the steps to perform the procedure.

System cards in a file processor (continued)

Summary of Replacing System cards in a file processor

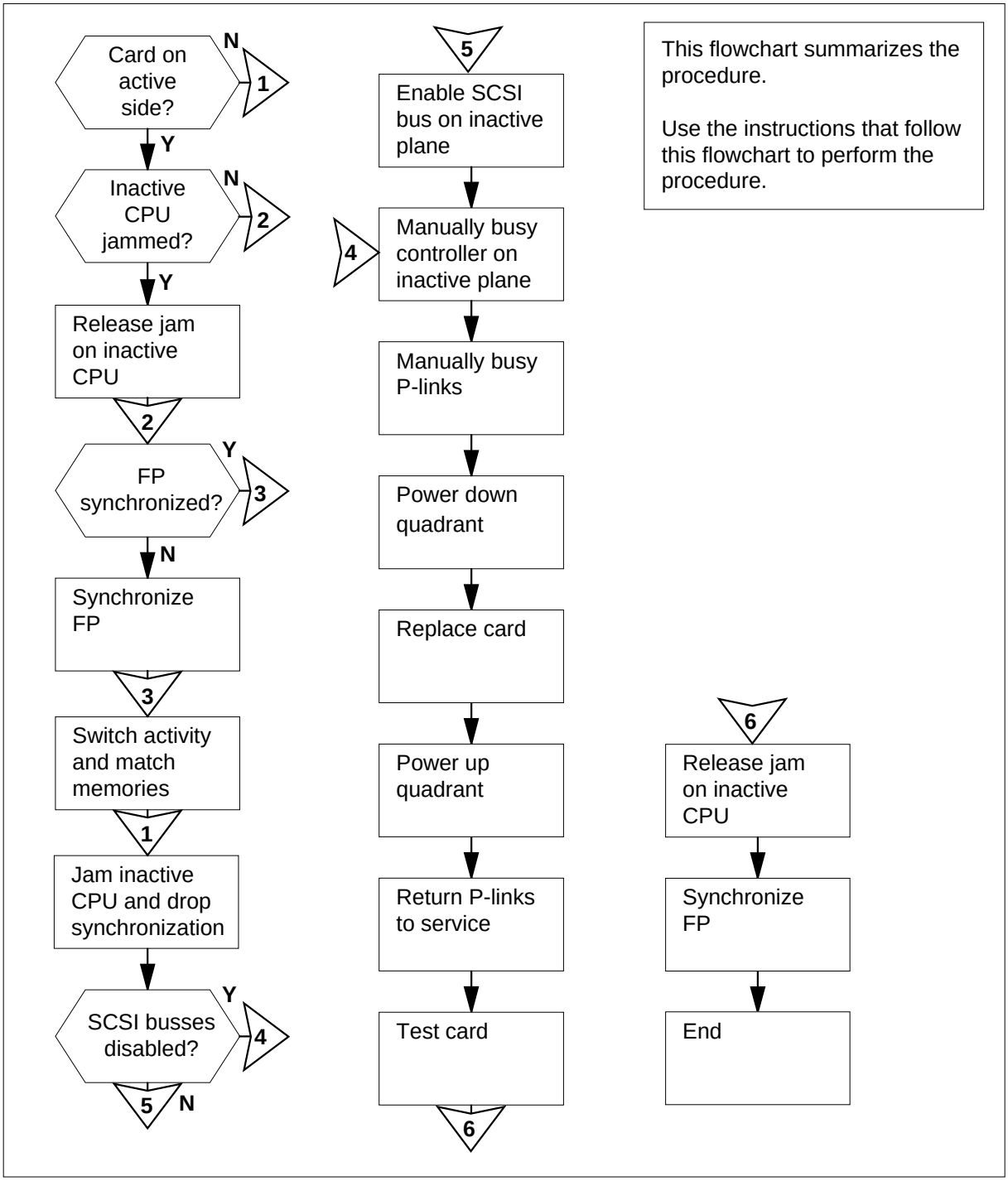

System cards in a file processor (continued)

Replacing System cards in a file processor

At your current location

1 Obtain a replacement card. Make sure that the replacement card and the card you remove have the same PEC and PEC suffix.

2 Perform the procedure *Verifying load compatibility of SuperNode cards* in this document. You must perform this procedure to make sure the replacement card is compatible with the software load. Complete the procedure and return to this point.

At the MAP terminal

3 To post the FP that contains the card you will replace, type

>MAPCI;MTC;PM;POST FP fp_no

and press the Enter key.

where

fp_no
is the number of the FP (0 to 99) that contains the card you will replace

Example of a MAP display:

```
FP 20:    FP20_QPI0     Plane  Devices
InSv    .                  .       .
```

4 To access the Plane level of the MAP display, type

>PLANE

and press the Enter key.

Example of a MAP display:

```
Sync            CPU    Jam   DRAM  Port  MsgCh  PLink
No      state act            0123  Card  0  1   0  1

Plane 0   .     A            -...    .   .  .   .  .
Plane 1   .    I   No        -...    F   L  L   P  P
```

5 Determine if the card you will replace is on the active or the inactive plane.

Note: The letter A under the Act header indicates the plane is active. The letter I indicates the plane is inactive.

If the card	Do
is on the active plane	step 6

System cards in a file processor (continued)

If the card	Do
is on the inactive plane	step 13

6 Determine if the inactive CPU is jammed.

Note: The word YES under the Jam header indicates that the CPU is jammed. The word NO indicates that the CPU is not jammed.

If the inactive CPU	Do
is jammed	step 7
is not jammed	step 8

7 Determine why the inactive CPU is jammed before you proceed. When you have permission, release the jam on the inactive CPU. To release the jam, type

>MATEJAM RELEASE

and press the Enter key.

Example of a MAP response:

```
FP 3 Jam Mate: Request has been submitted.
FP 3 Jam Mate:  Command Completed.
The inactive CPU is not jammed.
```

8 Determine if the FP is synchronized.

Note: The word YES under the Sync header indicates that the FP synchronized. The word NO indicates that the FP did not synchronize.

If the FP	Do
is synchronized	step 10
is not synchronized	step 9

9 To synchronize the FP, type

>SYNC

and press the Enter key.

Example of a MAP response:

System cards in a file processor (continued)

```
FP 3 Synchronization: Request has been submitted.
FP 3 Synchronization: Command completed.
The PM is now running in sync
```

If the SYNC command	Do
passed	step 10
failed	step 62

10 To switch activity, type

>SWACT

and press the Enter key.

Example of a MAP response:

```
FP 3 Activity Switch: Request has been submitted.
FP 3 Activity Switch: Command completed.
CPU 1 is now running active.
```

If the SWACT command	Do
passed	step 11
failed	step 62

11 To match the memories of the CPUs, type

>MATCH

and press the Enter key.

Example of a MAP response:

```
FP 3 Memory Match: Request has been submitted.
FP 3 Memory  Match: Command Completed.
Memory match was executed whilethe node was running in SYNC.
Memory contents have been  matched across the two planes
```

System cards in a file processor (continued)

12 Determine if the system completed the following conditions as a result of the memory match:

- The memory match was successful.
- The system did not generate any mismatch logs (AP317, AP318, FP354).
- The FP remained synchronized, indicated by YES or NoOvr under the Sync header on the MAP display.

If the system	Do
completed the conditions	step 13
did not complete the conditions	step 62

13 To jam the inactive CPU, type

>MATEJAM SET

and press the Enter key.

Example of a MAP response:

```
FP 3 Jam Mate: Request has been submitted.
FP 3 Jam Mate   Command completed.
The inactive CPU is jammed
```

14 To drop synchronization, type

>DPSYNC

and press the Enter key.

Example of a MAP response:

```
If you intend to jam the inactive CPU,
Please do so before dropping synchronization.
Please confirm (“YES" or “NO"):
```

15 To confirm the command, type

>YES

and press the Enter key.

Example of a MAP response:

```
FP 3 Drop synchronization: Request has been submitted.
FP 3 Drop synchronization: Command completed.

Now running in simplex mode with CPU 1 active.
```

If the DPSYNC command	Do
passed	step 16

System cards in a file processor (continued)

If the DPSYNC command	Do
failed	step 62

16 To access the Devices level of the MAP display, type

>DEVICES

and press the Enter key.

Example of a MAP display:

```
FP 3:FP3_SR256PlaneDevices
ISTbNoSync  .

CTRL0CTRL1  DEVICE
DABM  .  .0 1 2 3 4 5
SCSI 0    .(EN)  . (DIS)- . - . - -
SCSI 1  .(EN)  . (DIS)- . - . - -
```

17 Determine if the system disabled both SCSI buses on the inactive plane.

Note: The CTRL0 (controller 0) corresponds to plane 0 and CTRL1 corresponds to plane 1. The EN indicates the SCSI bus is enabled. The DIS indicates the SCSI bus is disabled. In the MAP display example in step 16, both SCSI buses on plane 0 are enabled and both SCSI buses on plane 1 are disabled.

If both SCSI buses on the inactive plane	Do
are disabled	step 19
are enabled	step 18

18 To switch enable the SCSI bus on the inactive plane, type

>SWEN scsi_no

and press the Enter key.

where

scsi_no
is the number of the enabled SCSI bus (0 or 1) on the inactive plane

Example of a MAP response:

```
FP 1 SwEn SCSI 0: Command request has been submitted.
FP 1 SwEn SCSI 0: Command passed.
```

If the SWEN command	Do
passed	step 19
failed	step 62

System cards in a file processor (continued)

19 To manually busy the controller on the inactive plane, type

>BSY CTRL ctrl_no

and press the Enter key.

where

ctrl_no
is the number of the controller (0 or 1) on the inactive plane

Example of a MAP response:

```
FP 1 Busy CTRL 0: Command request has been submitted.
FP 1 Busy CTRL 0: Command passed.
```

If the BSY command	Do
passed	step 20
failed	step 62

20 To access the Plane level of the MAP display, type

>PLANE

and press the Enter key.

Example of a MAP display:

```
Sync            CPU    Jam   DRAM  Port  MsgCh  PLink
 No          state act        0123  Card  0  1   0  1
    Plane 0   .     A         -...    .   .  .   .  .
    Plane 1   .     I   Yes   -...    .   .  .   .  .
```

21 Determine if the inactive FP plane is 0 or 1.

Note: The letter A under the Act header indicates that the plane is active. The letter I indicates the plane is inactive.

If the inactive plane	Do
is 0	step 22
is 1	step 24

22 To manually busy the P-links between plane 0 and P-link 0, type

>BSY PORT 0 PLINK 0

and press the Enter key.

Example of a MAP response:

System cards in a file processor (continued)

```
FP 3, Port 0 PLink 0, Busy PLink: Request has been
submitted.
FP 3, Port 0 Plink 0, Busy PLink: Command completed.
completed.

The PLink is manually busy.
```

If the BSY command	Do
passed	step 23
failed	step 62

23 To manually busy the P-links between plane 0 and P-link 1, type

>BSY PORT 0 PLINK 1

and press the Enter key.

Example of a MAP response:

```
FP 3, Port 0 PLink 1, Busy PLink: Request has been
submitted.
FP 3, Port 0 Plink 1, Busy PLink: Command completed.

The PLink is manually busy.
```

If the BSY command	Do
passed	step 26
failed	step 62

24 To manually busy the P-links between plane 1 and P-link 0, type

>BSY PORT 1 PLINK 0

and press the Enter key.

Example of a MAP response:

```
FP 3, Port 1 PLink 0, Busy PLink: Request has been
submitted.
FP 3, Port 1 Plink 0, Busy PLink: Command completed.

The PLink is manually busy.
```

If the BSY command	Do
passed	step 25
failed	step 62

System cards in a file processor (continued)

25 To manually busy the P-links between plane 1 and P-link 1, type

>BSY PORT 1 PLINK 1

and press the Enter key.

Example of a MAP response:

```
FP 3, Port 1 PLink 1, Busy PLink: Request has been submitted.
FP 3, Port 1  Plink 1, Busy PLink: Command completed.

The PLink is manually busy.
```

If the BSY command	Do
passed	step 26
failed	step 62

At the FP shelf

26

WARNING
Static electricity damage
Wear a wrist strap that connects to the wrist-strap grounding point of a frame supervisory panel (FSP) to handle circuit cards. The wrist strap protects the cards against static electricity damage.

Press down and release the power switch on the faceplate of the NTDX15 power converter. This procedure powers down the quadrant that corresponds to the card you replace.

If the alarm light on the power converter	Do
turns on	step 27
does not turn on	step 62

27 The next action depends on the type of card you replace.

If the card	Do
is an NT9X62	step 28
is other than listed here	step 34

System cards in a file processor (continued)

28

DANGER
Possible equipment damage
Make sure you do not contaminate the fiber tip surface. Do not touch the tip of the fiber. Dirt or oil from the skin transferred to the fiber tip surface degrades fiber performance.

DANGER
Damage to fiber cable
Make sure you handle fiber cables carefully. Do not crimp or bend fiber cables to a radius of less than 25 mm (1 in.).

Locate the card you will remove.

29 Label each fiber link pair transmit for the top fiber of each port and receive for the bottom fiber of each port.

Note: The fiber cable connections appear on the next page.

30 Disconnect the fiber links from the card as follows:

a Loosen the fiber connections with the latch handles up.

b Carefully push in and turn the fiber cable connector counter clockwise halfway until the connector slides out of the receptacle.

c When you disconnect the connectors, place dust caps on the ends of the connectors.

System cards in a file processor (continued)

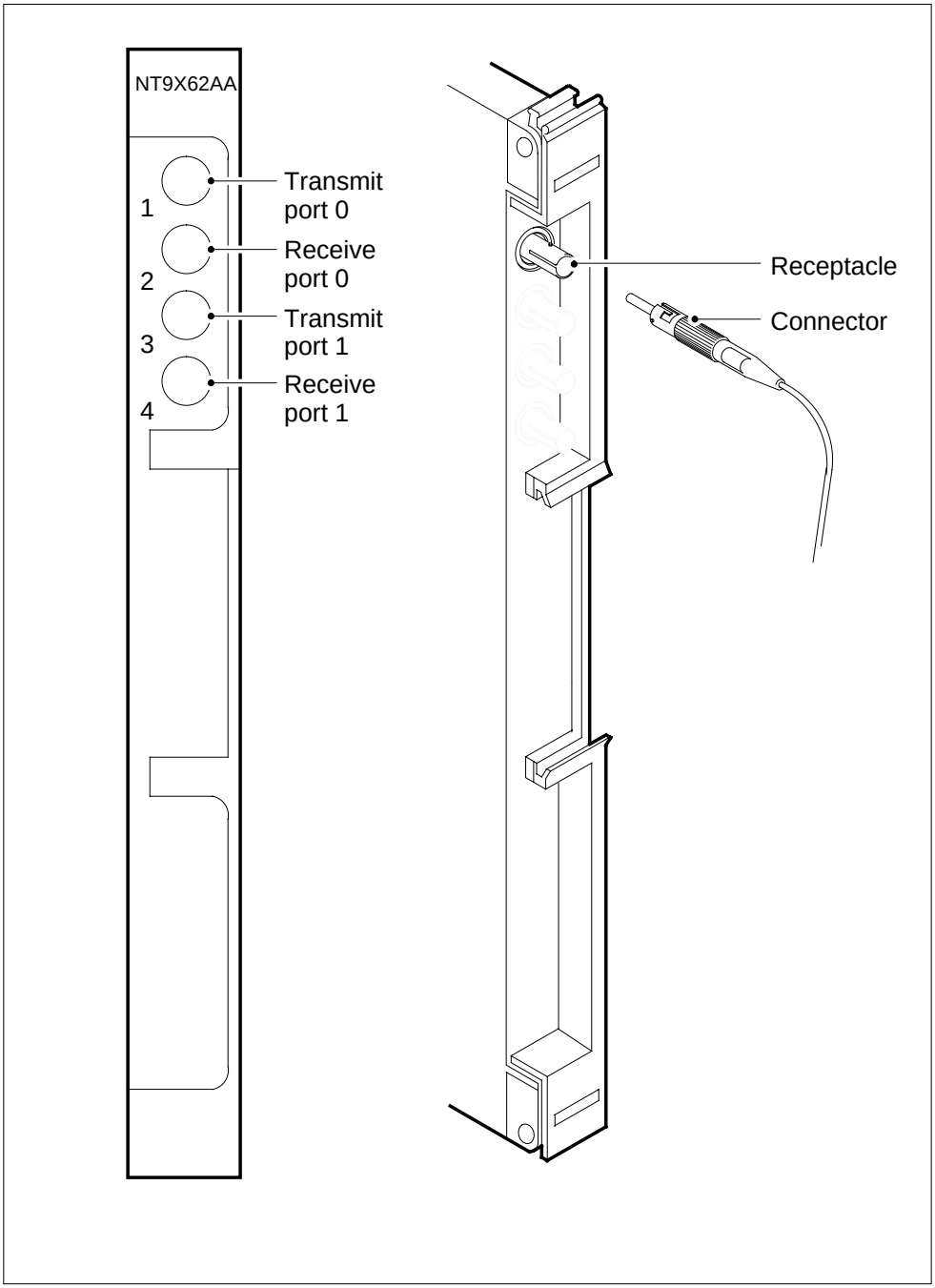

31 To replace the card, perform the procedure *Replacing a card* in this document. Complete the procedure and return to this point.

System cards in a file processor (continued)

32

> **DANGER**
> **Damage to fiber cable**
> Make sure you handle fiber cables carefully. Do not crimp or bend fiber cables to a radius of less than 25 mm (1 in.).

Reconnect the fiber links as follows:

a Tighten the fiber connections with the latch handles up.

b Carefully guide the fiber connector into the receptacle notches.

c Push in and turn the fiber connector clockwise halfway until the connection is finger tight. Put a maximum of 0.169 N m (1.5 lbf in) of pressure on the fiber connector.

33 Go to step 35.

34 To replace the card, perform the procedure *Replacing a card* in this document. Complete the procedure and return to this point.

35 To power up the NTDX15 power converter you powered down in step 26, lift and release the power switch on the faceplate.

If the alarm light on the power converter	Do
turns off	step 36
remains on	step 62

At the MAP terminal

36 Determine if the inactive FP plane is 0 or 1.

If the inactive plane	Do
is 0	step 37
is 1	step 39

37 To return the P-links between plane 0 and P-link 0 to service, type

```
>RTS  PORT  0  PLINK  0
```

and press the Enter key.

Example of a MAP response:

System cards in a file processor (continued)

```
FP 3, Port 0 PLink 0, RTS PLink: Request has been
submitted.
FP 3, Port 0 PLink 0, RTS PLink: Command completed.

The PLink is in-serviceTest Passed
```

If the RTS command	Do
passed	step 38
failed	step 62

38 To return the P-links between plane 0 and P-link 1 to service, type

>RTS PORT 0 PLINK 1

and press the Enter key.

Example of a MAP response:

```
FP 3, Port 0 PLink 1, RTS PLink: Request has been
submitted.
FP 3, Port 0 PLink 1, RTS PLink: Command completed.

The PLink is in-service Test Passed
```

If the RTS command	Do
passed	step 41
failed	step 62

39 To return the P-links between plane 1 and P-link 0 to service, type

>RTS PORT 1 PLINK 0

and press the Enter key.

Example of a MAP response:

```
FP 3, Port 1 PLink 1, RTS PLink: Request has been
submitted.
FP 3, Port 1 PLink 1, RTS PLink: Command completed.

The PLink is in-service Test Passed
```

If the RTS command	Do
passed	step 40
failed	step 62

System cards in a file processor (continued)

40 To return the P-links between plane 1 and P-link 0 to service, type

>RTS PORT 1 PLINK 1

and press the Enter key.

Example of a MAP response:

```
FP 3, Port 1 PLink 0, RTS PLink: Request has been
submitted.
FP 3, Port 1 PLink 0, RTS PLink: Command completed.

The PLink is in-service Test Passed
```

If the RTS command	Do
passed	step 41
failed	step 62

41 To access the Devices level of the MAP display, type

>DEVICES

and press the Enter key.

42 The next action depends on the type of card you replace.

If the card	Do
is an NT9X86	step 43
is other than listed here	step 47

43 To test the controller on the inactive plane, type

>TST CTRL ctrl_no

and press the Enter key.

where

ctrl_no
is the number of the controller (0 or 1) on the inactive plane

Example of a MAP response:

```
FP 3 Test CTRL  1: Command request has been submitted.
FP 3 Test CTRL  1: Command passed.
```

If the TST command	Do
passed	step 44
failed	step 62

System cards in a file processor (continued)

44 To return the controller on the inactive plane to service, type

>RTS CTRL ctrl_no

and press the Enter key.

where

ctrl_no
is the number of the controller (0 or 1) on the inactive plane

Example of a MAP response:

```
FP 3 Busy CTRL 1: Command request has been submitted.
FP 3 Busy CTRL 1: Command passed.
```

If the RTS command	Do
passed	step 45
failed	step 62

45 To access the Plane level of the MAP display, type

>PLANE

and press the Enter key.

46 To test the ports that correspond to the card that you replaced, type

>TST PORT plane_no

and press the Enter key.

where

plane_no
is the number of the plane (0 or 1)

Example of a MAP response:

```
FP 3 Port Test: Request has been submitted.
FP 3, Port 1,    Port Test: Command completed.
Test Passed.
Port card 1 is OK.
```

If the TST command	Do
passed	step 60
failed	step 62

47 To return the controller on the inactive plane to service, type

>RTS CTRL ctrl_no

and press the Enter key.

where

System cards in a file processor (continued)

ctrl_no
is the number of the controller (0 or 1) on the inactive plane

If the RTS command	Do
passed	step 48
failed	step 62

48 The next action depends on the type of card you replace.

If the card	Do
is a NT9X13, NT9X14, NT9X21, or NT9X26	step 49
is other than listed here	step 55

49 To access the Plane level of the MAP display, type

>PLANE

and press the Enter key.

50 The next action depends on the type of card you replaced.

If the card	Do
is a NT9X13	step 51
is a NT9X26	step 53
is a NT9X14 or NT9X21	step 54

51 To test the card, type

>TST CPU HW

and press the Enter key.

Example of a MAP response:

```
CPU test of Static RAM will corrupt the load in the
inactive CPU.
Please confirm (“YES", "Y"' "NO", or “N")
```

52 To confirm the command, type

>YES

and press the Enter key.

Example of a MAP response:

System cards in a file processor (continued)

```
FP 3 CPU Hardware Test: Request has been submitted.
FP 3 CPU Hardware Test: Command completed.
Inactive CPU hardware has passed all tests issued.
```

If the TST command	Do
passed	step 60
failed	step 62

53 To test the card, type

>TST CPU HW RTIF

and press the Enter key.

Example of a MAP response:

```
FP 1 CPU hardware test: Request has been submitted.
FP 1 CPU hardware  test: Command completed.
Inactive CPU hardware has passed all tests issued
```

If the TST command	Do
passed	step 60
failed	step 62

54 To test the memory, type

>TST MEM

and press the Enter key.

Example of a MAP response:

```
FP 1 Memory Test: Request has been submitted.
FP 1 Memory  Test: Command completed.
Inactive memory test passed.
DRAM upgrade results:


DRAM Card 0: No DRAM upgrade was performed.
DRAM Card 1: No DRAM upgrade was performed.
DRAM Card 2: No DRAM upgrade was performed.
DRAM Card 3: No DRAM  upgrade was performed.
```

If the TST command	Do
passed	step 60

System cards in a file processor (continued)

If the TST command	Do
failed	step 62

55 The next action depends on the type of card you replace.

If the card	Do
is a NT9X87 or NT9X88	step 56
is other than listed here	step 59

56 The next action depends on the type of card you replaced.

If the card	Do
is a NT9X87	step 57
is a NT9X88	step 58

57 To test the card you replaced, type

>TST DABM plane_no

and press the Enter key.

where

plane_no
is the number of the plane (0 or 1) associated with the card you replaced

Example of a MAP response:

```
FP 3 Test DABM  0: Command request has been submitted.

FP 3 Test DABM  0: Command passed.
```

If the TST command	Do
passed	step 59
failed	step 62

58 To test the card you replaced, type

>TST SCSI scsi_no ctrl_no

and press the Enter key.

where

scsi_no
is the number of the SCSI bus (0 or 1) associated with the card you replaced

System cards in a file processor (end)

ctrl_no
is the number of the controller (0 or 1) on the inactive plane

Example of a MAP response:

```
FP 0 Test SCSI  0: Command request has been submitted.
FP 0 Test SCSI  0: Command passed.
```

If the TST command	Do
passed	step 59
failed	step 62

59 To access the Plane level of the MAP display, type

>PLANE

and press the Enter key.

60 To release the jam on the inactive plane, type

>MATEJAM RELEASE

and press the Enter key.

Example of a MAP response:

```
FP 3 Jam Mate: Request has been submitted.
FP 3 Jam Mate: Command completed,
The inactive CPU is not jammed.
```

61 To synchronize the FP, type

>SYNC

and press the Enter key.

Example of a MAP response:

```
FP 3 Synchronization: Request has been submitted.
FP 3  Synchronization: Command completed.
The PM is now running in SYNC.
```

If the SYNC command	Do
passed	step 63
failed	step 62

62 For additional help, contact the next level of support.

63 The procedure is complete.

8 Frame supervisory panel and modular supervisory panel card replacement procedures

Introduction

This chapter contains card replacement procedures for the frame supervisory panel (FSP) and modular supervisory panel (MSP).

Each procedure contains the following sections:

- Application
- Common procedures
- Action

Application

This section identifies the FSP or MSP card(s) included in the replacement procedure.

Common procedures

This section lists common procedures for the FSP or MSP card replacement procedure. A common procedure is a series of steps that repeat within maintenance procedures. The removal and replacement of a card is an example of a common procedure. Common procedures are in the common procedures chapter in this NTP.

Do not use common procedures unless the step-action procedure directs you to go.

Action

This procedure contains a summary flowchart and a list of steps. Use the flowchart to review the procedure. Follow the steps to perform the procedure.

Recording card replacement activities

When you replace a card, record the following information in the office records:

- the serial number of the card that you replaced
- the date that you replace the card
- the reason that you replaced the card

FSP cards in a 42-in. (106.7-cm) SuperNode cabinet

Application

Use this procedure to replace the following cards in the shelves or frames listed.

PEC	Suffix	Card name	Shelf or frame name
NT0X91	AA	FSP drive and alarm card	application processor (AP) cabinet, computing module (CM) cabinet, dual plane combined core (DPCC) cabinet, enhanced multipurpose cabinet (EMC), SuperNode SE (SNSE) cabinet, 128k enhanced network (ENET) cabinet, 64k ENET cabinet, link peripheral processor (LPP) cabinet, message switch (MS) cabinet, SuperNode compact (SNC) cabinet
NT6X36	AA, AF	ARLB FSP alarm card	AP cabinet, CM cabinet, DPCC cabinet, EMC, SNSE cabinet, 128k ENET cabinet, 64k ENET cabinet, LPP cabinet, MS cabinet, SNC cabinet

Note: Automatic recovery from low battery (ARLB)

Refer to the “Index", if you cannot identify the following features for the card that you want to replace:

- product engineering code (PEC)
- PEC suffix
- provisioned shelf
- provisioned frame

The “Index" contains a list of the cards, shelves, and frames documented in this card replacement book.

Common procedures

There are no common procedures.

FSP cards
in a 42-in. (106.7-cm) SuperNode cabinet (continued)

Action

This procedure contains a summary of the flowchart and a list of steps. Use the flowchart to review the procedure. Follow the steps to perform the procedure.

FSP cards in a 42-in. (106.7-cm) SuperNode cabinet (continued)

Summary of replacing FSP cards in a 42-in. (106.7-cm) SuperNode cabinet

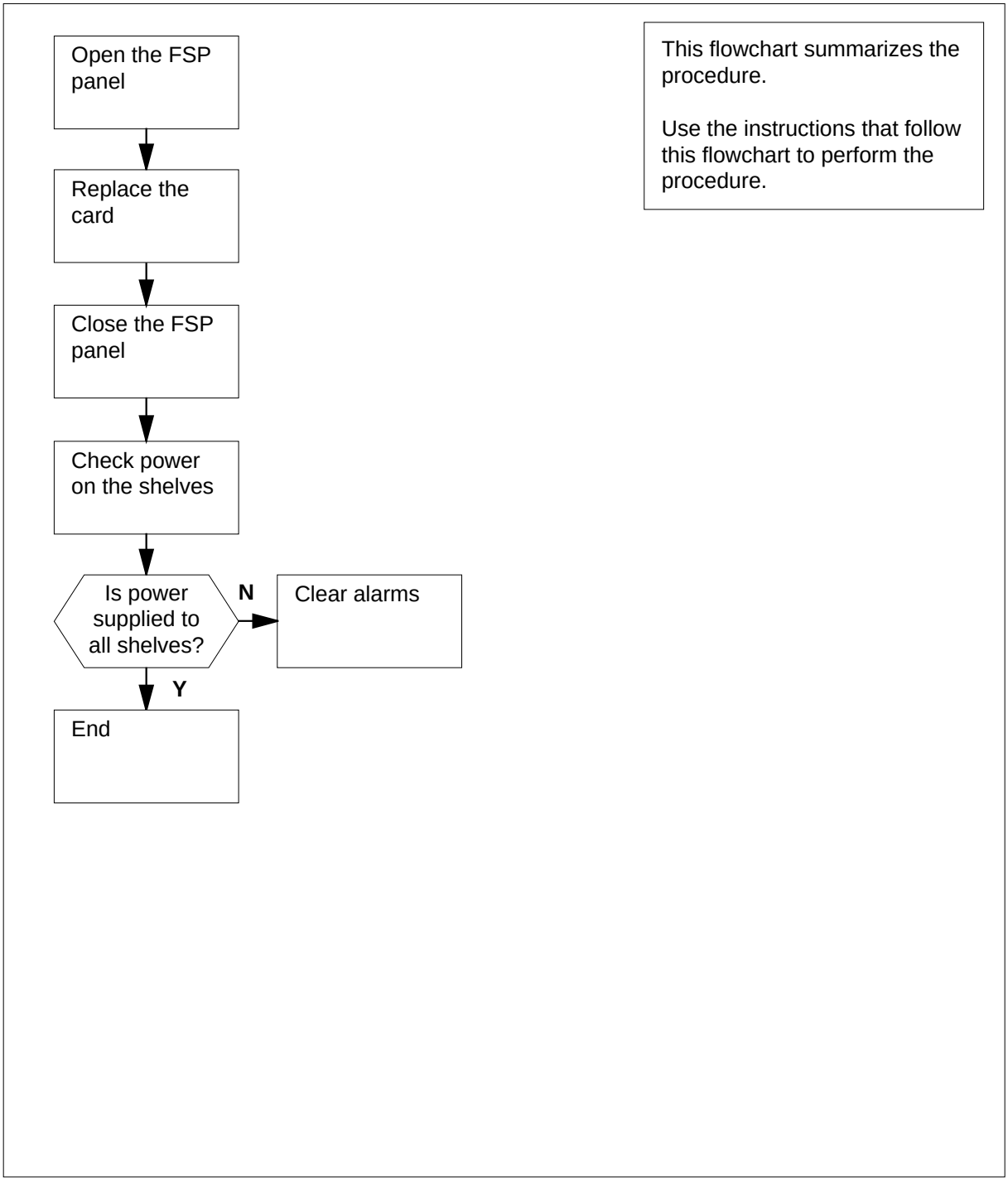

FSP cards
in a 42-in. (106.7-cm) SuperNode cabinet (continued)

Replacing FSP cards in a 42-in. (106.7-cm) SuperNode cabinet

At the frame

1

> **DANGER**
> **Risk of electrocution**
> Some of the terminals inside the frame supervisory panel (FSP) have an electrical potential of -48 V dc.Make sure that you remove all jewelry before you replace a card in the FSP. Do not touch any terminal inside the FSP.

Obtain a replacement card. Make sure that the replacement card and the card that you replace have the same PEC and PEC suffix.

2

> **WARNING**
> **Static electricity damage**
> Wear a wrist strap that connects to the wrist-strap grounding point of a frame supervisory panel (FSP) or modular supervisory panel (MSP) to handle circuit cards. The wrist strap protects the cards against static electricity damage.

Unscrew the slotted nut on the left of the FSP.

3 Open the FSP.

4 Remove the card.

5 Insert the replacement alarm and control card.

6 Close the FSP.

7 Tighten the slotted nut on the FSP.

8 The next action depends on the reason that you perform this procedure.

If a maintenance procedure	Do
directed you to this procedure	step 9
did not direct you to this procedure	step 10

9 Return to the maintenance procedure that directed you to this procedure and continue as directed.

FSP cards in a 42-in. (106.7-cm) SuperNode cabinet (end)

10 Check the CONVERTER FAIL LEDs on each power converter for each shelf.

If the LED for any power converter	Do
is lit	step 11
is not lit	step 12

11 To clear alarms, go to *Alarm and Performance Monitoring Procedures*. Do not return to this procedure.

12 The procedure is complete.

NT0X36 in a cabinetized input/output equipment frame

Application

Use this procedure to replace a NT0X36 in a cabinetized input/output equipment (CIOE) frame, as listed in the following table.

PEC	Suffix	Card name	Shelf or frame name
NT0X36	AB	Power control and alarm card	CIOE

Note: To perform this procedure, shelf positions 05, 19, and 33 must have one of the following:

- input/output controller (IOC)
- disk drive unit (DDU)
- magnetic tape drive unit (MTD)

If the shelf positions in the CIOE frame in your office have other subsystems or applications, contact the next level of support.

Refer to the “Index", if you cannot identify the following features for the card that you want to replace:

- product engineering code (PEC)
- PEC suffix
- provisioned shelf
- provisioned frame

The “Index" contains a list of the cards, shelves, and frames documented in this card replacement book.

Common procedures

There are no common procedures.

Action

This procedure contains a summary flowchart and a list of steps. Use the flowchart to review the procedure. Follow the steps to perform the procedure.

NT0X36
in a cabinetized input/output equipment frame (continued)

Summary of replacing NT0X36 in a cabinetized input/output equipment frame

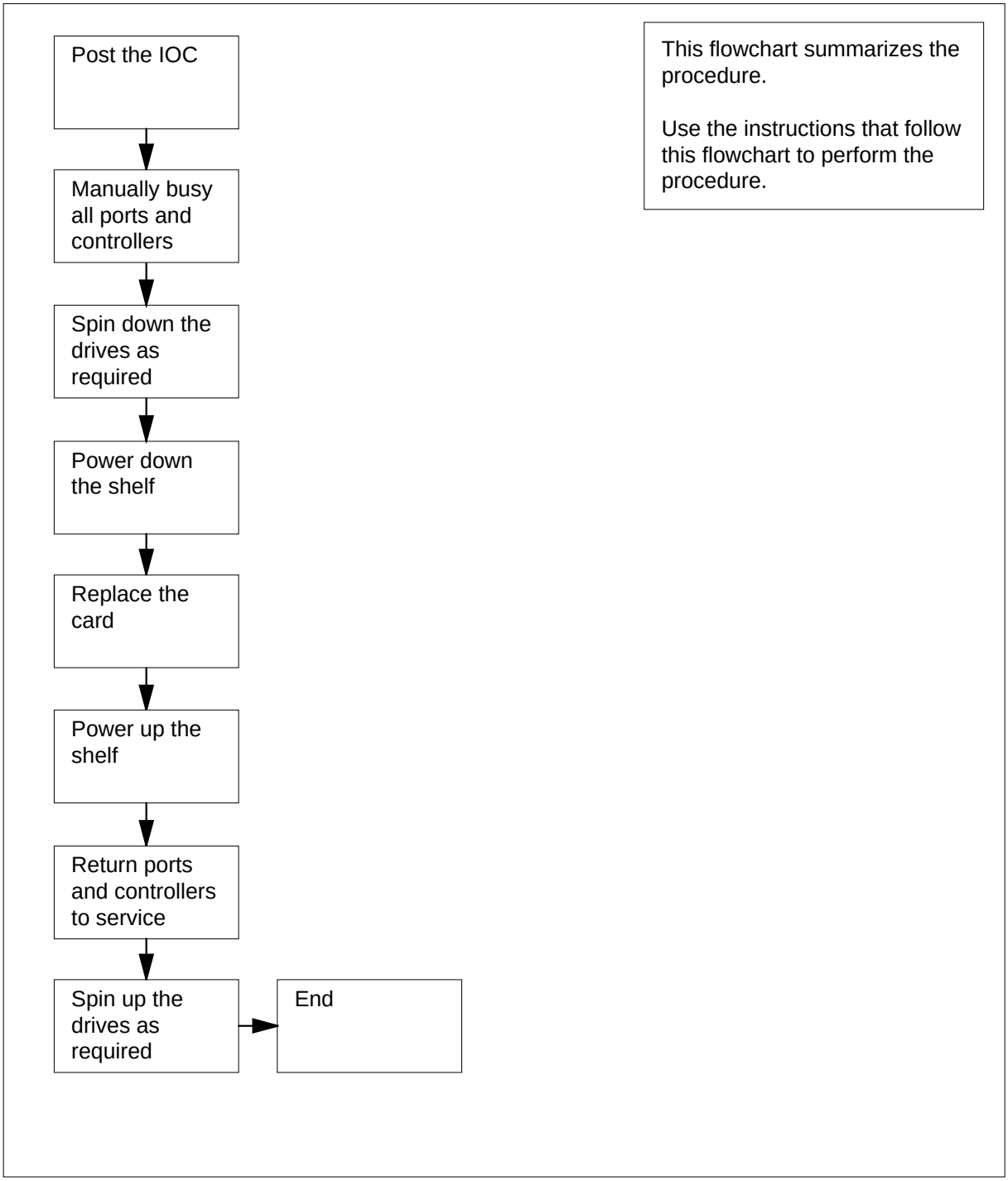

NT0X36
in a cabinetized input/output equipment frame (continued)

Replacing NT0X36 in a cabinetized input/output equipment frame

At your current location

1

ATTENTION

This procedure includes directions to manually busy all terminal controller cards for the IOC. Perform this procedure from a MAP terminal that does not connect to the IOC.

CAUTION

Potential loss of service

This procedure includes directions to manually busy an IOC and the IOC device controllers or a DDU. Perform this procedure only if you need to restore out-of-service components. If you do not need to restore out-of-service components, perform this procedure during periods of low traffic.

DANGER

Risk of electrocution

Some of the terminals inside the frame supervisory panel (FSP) have an electrical potential of -48 V dc. Make sure that you remove all jewelry before you replace a card in the FSP. Do not touch any terminal inside the FSP.

Obtain a replacement card. Make sure that the replacement card and the card that you remove have the same PEC and PEC suffix.

At the cabinet

2 Unscrew the slotted nut on the left of the FSP.

3 Open the FSP.

NT0X36
in a cabinetized input/output equipment frame (continued)

4

CAUTION
Potential loss of service
If the power distribution configuration in the following table does not match your office configuration, contact the next level of support. Contact the next level of support before you proceed.

Use the following table to identify the shelf positions, subsystems, subsystem numbers, shelf side, and FSP fuse numbers that associate with the card you replace.

Power and alarm card slot	Shelf position	Sub-system	Wiring option	Shelf side	FSP fuse number
PWR ALM 1	33	DPP		A	01
	33	MTD	A		
	19	IOC	A		02
PWR ALM 2	05	DDU 0		A	03
	05	ROS		A	
	19	IOC	B		04
PWR ALM 3	33	DPP		B	05
	33	MTD	B		
	05	DDU 1		B	06
	05	ROS		B	

NT0X36
in a cabinetized input/output equipment frame (continued)

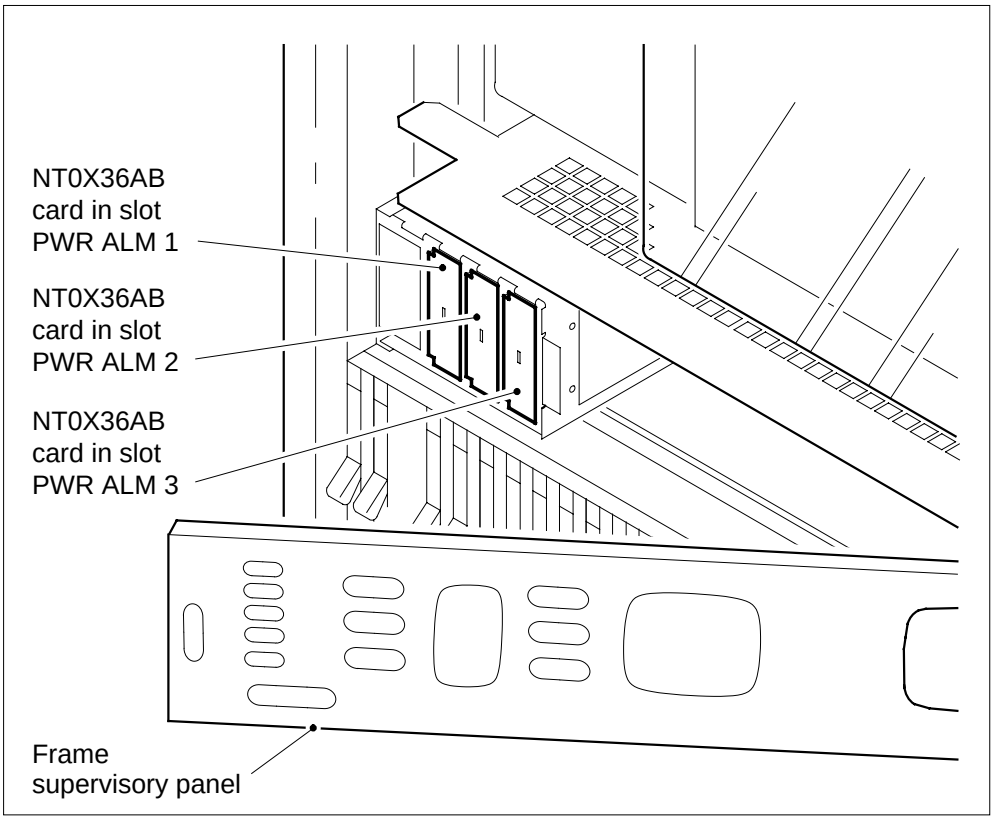

5 Record the shelf positions, shelf side (if needed), and fuse numbers that associate with the card that you replace.

6 Record the subsystem names and subsystem numbers (if needed) that associate with the power and alarm card that you replace.

> ***Note:*** Each power and alarm card associate with two shelves (a maximum of two subsystems).

At the MAP terminal

7 To access the IOD level of the MAP display, type

`>MAPCI;MTC;IOD`

and press the Enter key.

8 To post the affected input/output controller (IOC), type

`>IOC  ioc_no`

and press the Enter key.

where

ioc_no
is the number of the IOC (0 to 19)

NT0X36
in a cabinetized input/output equipment frame (continued)

9 Select a shelf position from the list that you recorded at step 5.

If the shelf	Do
contains DDUs	step 10
contains an IOC	step 16
contains other than listed here	step 92
does not contain a unit	step 46

10 To post the DDU controller for the affected DDU, type

>CARD card_no

and press the Enter key.

where

card_no
is the card number (0 to 8)

Example of a MAP display:

```
IOD
IOC  0  1  2  3
STAT .  .  .  .

DIRP: AMA  B XFER:   .    SLM : SLMbsy NOP :   .    NX25:   .
MLP :   .    DPPP:   .    DPPU:   .    SCAI:   .

IOC   CARD    0     1     2     3     4     5     6     7     8
 0    PORT  0123  0123  0123  0123  0123  0123  0123  0123  0123

      STAT  .---  .---  ....  .---  ....  ----  ..--  .---  ----

      TYPE  MTD   DDU   CONS  MPC   CONS        CONS  MPC
Card 0   MTD           0
         TapeName
         Status     Idle
         User
```

11 Determine the state of the DDU controller card.

If the card	Do
is MBSY and the associated disk drive is not spun down	step 14
is MBSY and the associated disk drive is spun down	step 15
is OFFL	step 84

NT0X36
in a cabinetized input/output equipment frame (continued)

If the card	Do
is other than listed here	step 12

12 To determine if files on the DDU are open, type

>ALLOC

and press the Enter key.

Example of a MAP response:

```
VOLID  VOL_NAME  SERIAL_NO  BLOCKS  ADDR  TYPE  R/O  FILES_OPEN

  0    IMAGE        2800     45000  D000    0   NO       0
  1    XPMLOADS     2801     35000  D000    0   NO       0
  2    RTMLOADS     2802     20000  D000    0   NO       0
     .
     .
     .
  7    SMDR         2807      5000  D000    0   NO       0
  8    AMA1         2808      5000  D000    0   NO       0
  9    TST          2809        50  D000    0   NO       0
 10    AMA2         280A       500  D000    0   NO       0
```

If	Do
any files are open	step 85
all files are closed	step 13

13 To manually busy the DDU controller, type

>BSY

and press the Enter key.

14 Spin down the disk drive, type

>STOP

and press the Enter key.

15 Wait until the DDU spins down before you proceed to the next step. The status code `spun_down` appears under the Drive_State header on the MAP display.

16 Determine the state of the IOC.

If the state of the IOC	Do
is `M`	step 46
is other than listed here	step 17

NT0X36
in a cabinetized input/output equipment frame (continued)

17 The next action depends if terminal controller cards are on the shelf.

If terminal controller cards	Do
are on the shelf	step 18
are not on the shelf	step 24

18 To post the terminal controller card, type

>CARD card_no

and press the Enter key.

where

card_no
is the card number (0 to 8)

Example of a MAP display:

```
IOD
IOC  0  1  2  3
STAT .  .  .  .

DIRP: AMA  B XFER:   .    SLM : SLMbsy NOP :   .    NX25:   .
MLP :   .    DPPP:   .    DPPU:   .    SCAI:   .

IOC   CARD    0     1     2     3     4     5     6     7     8
 0    PORT  0123  0123  0123  0123  0123  0123  0123  0123  0123

      STAT  .---  .---  ....  .---  ....  ----  ..--  .---  ----

      TYPE  MTD   DDU   CONS  MPC   CONS        CONS  MPC
Card   6   Ckt      0         1         2         3
Status             .         .         -         -
Cons Id          RD040     RD041     TEAM4     TEAM6
ConType          VT100     VT100     VT100     VT100
```

19 Note the CONS ID and status for each port.

If	Do
all ports are `ManBsy`	step 23
one or more ports are `Offl`	step 84
one or more ports are `.` (dot)	step 20
all ports are in any other out-of-service state	step 21

20 Inform operating company personnel that you will remove from service the CONS IDs that associate with the card you replace.

NT0X36
in a cabinetized input/output equipment frame (continued)

21 To manually busy a port on the card, type

>BSY port_no

and press the Enter key.

where

port_no
is the port number (0 to 3)

If the BSY command	Do
passed	step 22
failed	step 92

22 Repeat step 21 until all ports on the card are manual busy. Go to step 23.

23 Repeat steps 18 to 22 for each terminal controller card on the shelf. Go to step 24.

24 The next action depends if multiprotocol controller (MPC) cards are on the shelf.

If MPC cards	Do
are on the shelf	step 25
are not on the shelf	step 32

25 To post the MPC card, type

>CARD card_no

and press the Enter key.

where

card_no
is the card number (0 to 8)

Example of a MAP display:

NT0X36
in a cabinetized input/output equipment frame (continued)

```
IOD
IOC  0  1  2  3
STAT .  .  .  .

DIRP: AMA  B XFER:   .    SLM : SLMbsy NOP :   .    NX25:   .
MLP :   .    DPPP:   .    DPPU:   .    SCAI:   .

IOC   CARD    0     1     2     3     4     5     6     7     8
 0    PORT  0123  0123  0123  0123  0123  0123  0123  0123  0123

      STAT  .---  .---  ....  .---  ....  ----  ..--  .---  ----

      TYPE  MTD   DDU   CONS  MPC   CONS        CONS  MPC
Card 3   Unit          0
         User      SYSTEM    BOARD  LINK0  LINK1  LINK2   LINK3
         Status      Ready   COMACT UNEQ   N/A    UNEQ    ENABLD
```

26 Determine the state of the card.

If the card state	Do
is MANB	step 31
is OFFL	step 84
is other than listed here	step 27

Note: The card state listed appears under the BOARD header on the MAP display.

27 To display status information on current MPC conversations, type

>QCONV

and press the Enter key.

Example of a MAP response:

```
MPC  L  LCN  STATUS   CCC  SEC  PARDEV  INP  OPEN OWNER
---  -  --- --------- ---- ---- ------  ---- ---- --------
  0  3    1 INACTIVE  none none none     FIL    0 none
  0  3    2 INACTIVE  none none none     FIL    0 none
```

If	Do
one or more sessions are active	step 28
all sessions are inactive	step 29

NT0X36
in a cabinetized input/output equipment frame (continued)

28 Notify all users that an interruption of MPC service will occur. Wait until all sessions are inactive before you proceed.

29 To manually busy the card and the card links, type

>BSY ALL FORCE

and press the Enter key.

Example of a MAP response:

```
TYPE YES TO VERIFY FORCE, NO TO CANCEL COMMAND
Please confirm ("YES", "Y", "NO", or "N"):
```

30 To confirm the command, type

>YES

and press the Enter key.

If the BSY command	Do
passed	step 31
failed	step 92

31 Repeat steps 25 to 30 for each MPC card on the shelf. Go to step 32.

32 The next action depends if disk drive controller cards are on the shelf.

If disk drive controller cards	Do
are on the shelf	step 33
are not on the shelf	step 38

33 To post the disk drive controller card, type

>CARD card_no

and press the Enter key.

where

card_no
is the card identification number (0 to 8)

Example of a MAP display:

NT0X36
in a cabinetized input/output equipment frame (continued)

```
IOD
IOC  0  1  2  3
STAT .  .  .  .

DIRP: AMA  B XFER:   .    SLM : SLMbsy NOP :   .    NX25:   .
MLP :   .    DPPP:   .    DPPU:   .    SCAI:   .

IOC   CARD    0     1     2     3     4     5     6     7     8
 0    PORT  0123  0123  0123  0123  0123  0123  0123  0123  0123

      STAT  .---  .---  ....  .---  ....  ----  ..--  .---  ----

      TYPE  MTD   DDU   CONS  MPC   CONS        CONS  MPC
Card 0   MTD           0
         TapeName
         Status     Idle
         User
```

34 Determine the state of the card.

If the card	Do
is MBSY	step 37
is OFFL	step 84
is other than listed here	step 35

35 To determine if open files are on the DDU, type

>ALLOC

and press the Enter key.

Example of a MAP response:

```
 VOLID  VOL_NAME  SERIAL_NO  BLOCKS  ADDR  TYPE  R/O  FILES_OPEN

   0    IMAGE        2800     45000  D000    0   NO        0
   1    XPMLOADS     2801     35000  D000    0   NO        0
   2    RTMLOADS     2802     20000  D000    0   NO        0
      .
      .
      .
   7    SMDR         2807      5000  D000    0   NO        0
   8    AMA1         2808      5000  D000    0   NO        0
   9    TST          2809        50  D000    0   NO        0
  10    AMA2         280A       500  D000    0   NO        0
```

If	Do
any files are open	step 85

NT0X36
in a cabinetized input/output equipment frame (continued)

If	Do
all files are closed	step 36

36 To manually busy the card, type

>BSY

and press the Enter key.

Example of a MAP response:
bsyOK

37 Repeat steps 33 to 36 for each disk drive controller card on the shelf. Go to step 38.

38 The next action depends if magnetic tape drive controller cards are on the shelf.

If magnetic tape drive controller cards	Do
are on the shelf	step 39
are not on the shelf	step 44

39 To post the card, type

>CARD **card_no**

and press the Enter key.

where

card_no
is the card number (0 to 8)

Example of a MAP display:

```
IOD
IOC  0  1  2  3
STAT .  .  .  .

DIRP: AMA  B XFER:   .    SLM : SLMbsy NOP :   .    NX25:
MLP :   .    DPPP:   .    DPPU:   .    SCAI:   .

IOC   CARD    0     1     2     3     4     5     6     7
 0    PORT  0123  0123  0123  0123  0123  0123  0123  0123
0123
      STAT  .---  .---  ....  .---  ....  ----  ..--  .---
----
      TYPE  MTD   DDU   CONS  MPC   CONS        CONS  MPC
Card 0   MTD           0
         TapeName
         Status     Idle
         User
```

NT0X36
in a cabinetized input/output equipment frame (continued)

40 Determine the state of the card.

If the card	Do
is `ManBsy`	step 43
is `Offl`	step 84
is `Idle`	step 42
is other than listed here	step 41

41 Notify all users that an interruption in service for the device will occur. Wait until all users finish with the device before you proceed to the next step.

42 To manually busy the card, type

`>BSY`

and press the Enter key.

Example of a MAP response:

```
bsy
OK
```

43 Repeat steps 39 and 42 for each magnetic tape drive controller card on the shelf. Go to step 44.

44 To return to the IOC level of the MAP display, type

`>QUIT`

and press the Enter key.

45 To manually busy the affected IOC, type

`>BSY  IOC`

and press the Enter key.

46 The next action depends on if the other subsystem that associates with the power and alarm card you replace is out of service.

If the other subsystem	Do
is out of service	step 48
is not out of service	step 47
that associates with the card you replace is not present	step 48

47 To remove the other subsystem that associates with the card you replace, go to step 9 and follow the procedure.

NT0X36
in a cabinetized input/output equipment frame (continued)

At the CIOE frame

48

> **WARNING**
> **Static electricity damage**
> Wear a wrist strap that connects to the wrist-strap grounding point of a frame supervisory panel (FSP) or a modular supervisory panel (MSP) to handle circuit cards. The wrist strap protects the cards against static electricity damage.

For each power converter on the shelf, set the handle of the power converter POWER switch down to the OFF position.

49 Remove the FSP fuses that associate with the alarm and control card you replace.

Note: You recorded the fuse numbers in step 5.

50

> **WARNING**
> **Loss of service**
> Make sure that the alarm and control card you remove is the alarm that controls the subsystems that you removed from service. Removal of the wrong card causes a loss of service.

Remove the card from the slot that you recorded in step 5.

51 Insert the replacement card.

52 Close the FSP.

53 Tighten the slotted nut on the FSP.

54 Insert the fuses that you removed in step 49.

55 The next action depends on the power converter on the shelf.

If the power converter	Do
is a NT2X70AA/AB/AC/AD	step 56
is a NT2X70AE	step 58
is a NT1X78	step 60

56 Power up the converter, as follows.

a Pull up and set the handle of the POWER switch to the RESET position. Hold the switch until the CONVERTER FAIL LED turns off.

b Release the handle.

NT0X36
in a cabinetized input/output equipment frame (continued)

57 Go to step 61.

58 Power up the converter, as follows.

a Pull up and set the handle of the POWER switch to the ON position.

b Press and hold the RESET button on the power converter until the CONVERTER FAIL LED turns off.

c Release the RESET button.

59 Go to step 61.

60 Reset the power converter:

a Set the POWER switch on the converter to the ON position.

b Press and hold the RESET button on the power converter.

c When the CONVERTER FAIL lamp turns off, release the RESET button.

61 Verify that the power fail lamp is not lit. If the power lamps is not lit, the power converter is ON.

If the power fail lamp	Do
is not lit	step 63
is lit	step 92

At the MAP terminal

62 To return the IOC to service, type

>RTS IOC

and press the Enter key.

63 Select a shelf position from the list that you recorded in step 5.

If the shelf	Do
has DDUs	step 64
has an IOC	step 66

64 To post the DDU controller that you posted at step 10, type

>CARD card_no

and press the Enter key.

where

card_no
is the card number (0 to 8)

65 To return the DDU controller to service, type

>RTS

NT0X36
in a cabinetized input/output equipment frame (continued)

and press the Enter key.

Note: The return to service process can require a maximum of 3 min. The RTS command spins up the disk drive.

If the RTS command	Do
passed (status is `Ready` and drive state is `on-line`)	step 62
failed (status or drive state is other than listed here)	step 92

66 The next action depends if the controller cards are on the shelf.

If disk drive or magnetic tape drive controller cards	Do
are on the shelf	step 67
are not on the shelf	step 70

67 To post the card, type

>CARD card_no

and press the Enter key.

where

card_no
is the card number (0 to 8)

68 To return the card to service, type

>RTS

and press the Enter key.

69 Repeat steps 67 and 68 for each disk drive or magnetic tape drive controller card on the shelf. Go to step 70.

70 The next action depends on if MPC cards are on the shelf.

If MPC cards	Do
are on the shelf	step 71
are not on the shelf	step 77

71 To post the card, type

>CARD card_no

and press the Enter key.

where

card_no
is the card number (0 to 8)

NT0X36
in a cabinetized input/output equipment frame (continued)

72 To load the MPC, type

>DOWNLD

and press the Enter key.

Example of a MAP response:

```
DOWNLOAD OF TABLE MPC FILE "MPC403AB" SUCCEEDED
```

If the DOWNLD command	Do
passed	step 73
failed	step 92

73 To return the MPC to service, type

>RTS ALL

and press the Enter key.

Example of a MAP response:

```
REQUEST PASSED FOR CARD.REQUEST PASSED FOR LINKS.
```

74 Wait 1 min and check the status of MPC components.

If the system status	Do
is `Ready`, the board status is `COMACT`, and the link status is `ENABLD` for each provisioned link	step 75
is other than listed here	step 92

75 Repeat steps 71 to 74 for each card on the shelf. Go to step 76.

76 Notify users that MPC service is available.

77 The next action depends if terminal controller cards are on the shelf.

If terminal controller cards	Do
are on the shelf	step 78
are not on the shelf	step 80

78 To post the card, type

>CARD card_no

and press the Enter key.

where

NT0X36
in a cabinetized input/output equipment frame (continued)

card_no
is the card number (0 to 8)

79 To return a port on the card to service, type

`>RTS port_no`

and press the Enter key.

where

port_no
is the port number (0 to 3)

If the RTS command	Do
passed	step 80
failed	step 92

80 The next action depends if the other subsystem that associates with the card you replaced was returned to service.

If the other subsystem	Do
was returned to service	step 82
was not returned to service	step 81
does not associate with the card you replaced	step 82

81 Go to step 63 and follow the procedure to return to service the other subsystem that associates with the the card you replaced.

82 The next action depends on the reason that you perform this procedure.

If a maintenance procedure	Do
directed you to this procedure	step 83
did not direct you to this procedure	step 93

83 Return to the maintenance procedure that directed you to this procedure and continue as directed.

84 To determine why the component is offline, consult operating company personnel. Continue as directed by operating company personnel.

NT0X36
in a cabinetized input/output equipment frame (continued)

85

> **WARNING**
> **Loss of data**
> If files are open do not busy the controller. If you busy the controller while files are open, billing data will be lost. For additional help, contact the next level of support.

If device independent recording package (DIRP) volumes are open, the following events occur:

- the DDU drops SysB
- billing data is lost
- open Logutil files are lost or corrupted

Before starting card replacement procedures, close the DIRP volumes. Close files from DIRP and demount active volumes from the DDU. Use the procedure, “Deallocating Recording Volumes in the DIRP Utility" in *Routine Maintenance Procedures*.

86 Stop files recording to and from the Logutil. Type the following command at the Logutil command level:

`>LOGUTIL;LISTDEVS`

and press the Enter key.

87 Close files on volumes on the DDU of the IOC.

`>STOPDEV <dev_name>`

and press the Enter key.

where

dev_name
is the name of the device

`>QUIT`

and press the Enter key.

88 Repeat the ALLOC command to determine if files are closed, by typing

`>ALLOC`

and pressing the Enter key.

If the files	Do
are open	step 89
are closed	step 90

89 Confirm that you have done steps 85 to 88. If the files are still open, contact your next level of support.

NT0X36
in a cabinetized input/output equipment frame (end)

90 Manually busy the DDU, by typing

>BSY

and pressing the Enter key.

If the DDU	Do
is MBSY	step 91
is not MBSY	step 92

91 When cards are replaced and the DDU is in service, open the files. Use the procedure “Allocating Recording Volumes in the DIRP Utility" in *Routine Maintenance Procedures*.

92 For additional help, contact the next level of support.

93 The procedure is complete.

NT0X36
in a cabinetized trunk module equipment frame

Application

Use this procedure to replace an NT0X36 in a cabinetized trunk module equipment (CTME) frame, as listed in the following table.

PEC	Suffix	Card name	Shelf or frame name
NT0X36	AB	Power control and alarm card	CTME equipped with maintenance trunk module (MTM), office alarm unit (OAU), or trunk module (TM). Meridian or packaged switch cabinet equipped with service trunk module (STM).

Refer to the “Index", if you cannot identify the following features for the card that you want to replace;

- product engineering code (PEC)
- PEC suffix
- provisioned shelf
- provisioned frame

The “Index" contains a list of the cards, shelves, and frames documented in this card replacement book.

Common procedures

This procedure refers to *Loading a PM*.

Do not go to the common procedure unless the step-action procedure directs you.

Action

This procedure contains a summary flowchart and a list of steps. Use the flowchart to review the procedure. Follow the steps to perform the procedure.

NT0X36
in a cabinetized trunk module equipment frame (continued)

Summary of replacing NT0X36 in a cabinetized trunk module equipment frame

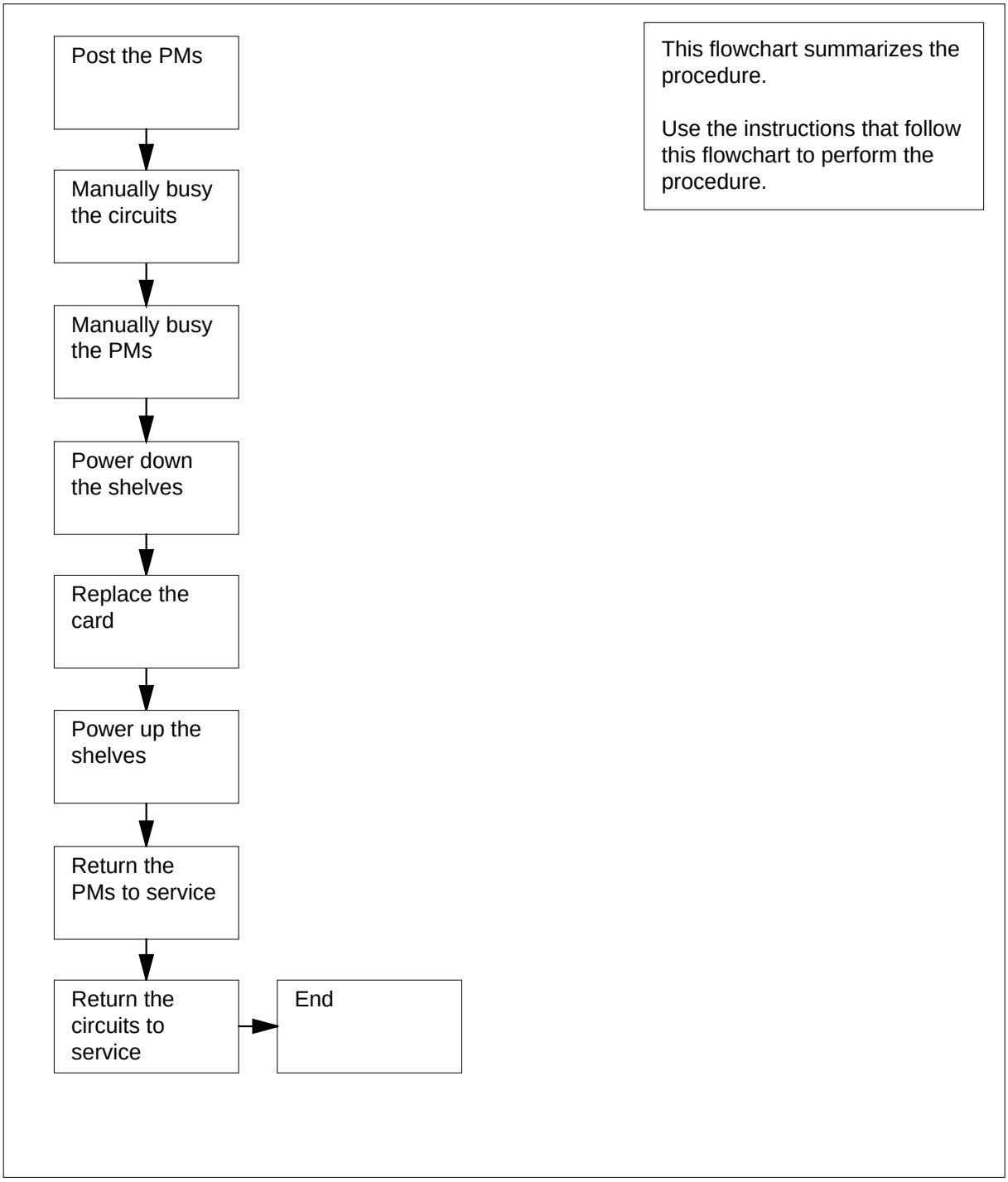

NT0X36
in a cabinetized trunk module equipment frame (continued)

Replacing NT0X36 in a cabinetized trunk module equipment frame

At your current location

1

CAUTION
Loss of service
This procedure includes directions to remove an MTM, STM, or TM from service, which can cause service degradation. Perform this procedure only if you need to restore out-of-service components. If you do not need to restore out-of-service components, perform this procedure during periods of low traffic. Do not perform this procedure if essential services use PM resources.

DANGER
Risk of electrocution
Some of the terminals inside the frame supervisory panel (FSP) have an electrical potential of -48 V dc. Make sure that you remove all jewelry before you replace a card in the FSP. Do not touch any terminal in the FSP.

Obtain a replacement card. Make sure that the replacement card and the card that you removed have the same PEC and PEC suffix.

At the cabinet

2 Unscrew the slotted nut on the left of the FSP.

3 Open the FSP.

4 To identify the shelf positions and FSP fuses that associate with the power and alarm card you will replace, use the following table and diagram.

(Sheet 1 of 2)

Power and alarm card slot	FSP fuse number	Shelf position
PWR ALM 1	01	05
	02	33

NT0X36
in a cabinetized trunk module equipment frame (continued)

(Sheet 2 of 2)

Power and alarm card slot	FSP fuse number	Shelf position
PWR ALM 2	04	19
PWR ALM 3	05	47

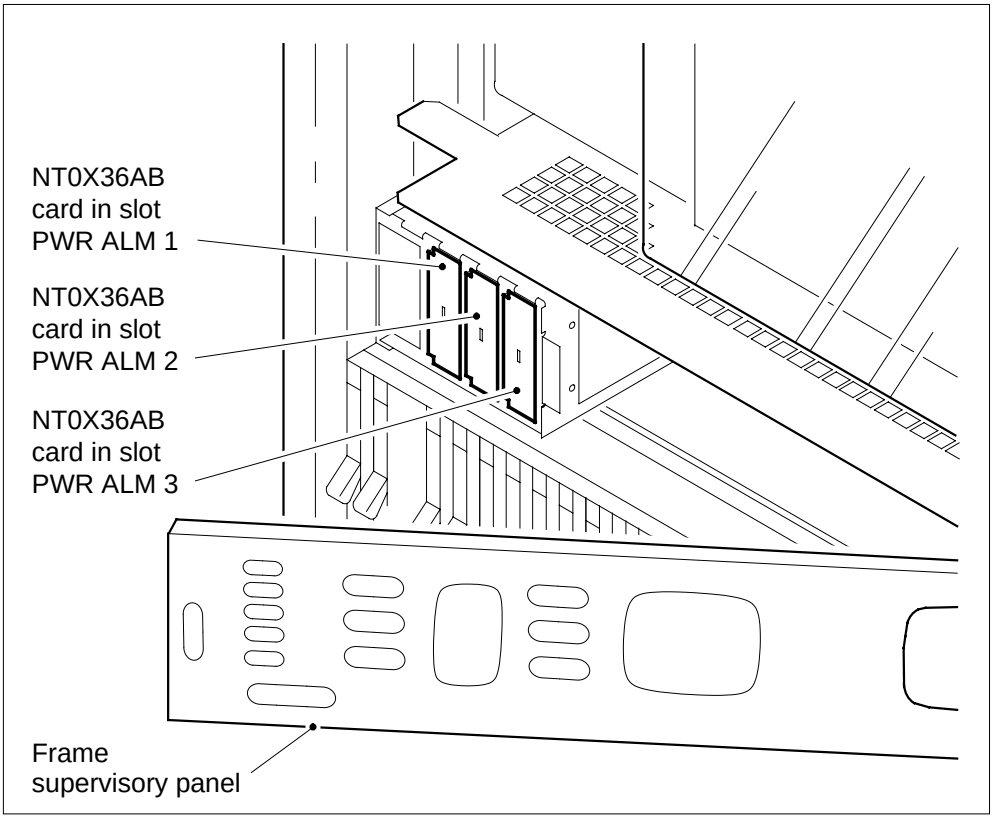

5

CAUTION
Potential loss of service
If the power distribution in the following procedure does not match your office configuration, contact the next level of support before you proceed.

Record the fuse numbers and shelf positions that associate with the card you replace.

NT0X36
in a cabinetized trunk module equipment frame (continued)

6 Select a shelf that associates with the FSP card you replace.

At the MAP terminal

7 To access the PM level of the MAP display, type

>MAPCI;MTC;PM

and press the Enter key.

Example of a MAP display:

```
            SysB    ManB    OffL    CBsy    ISTb    InSv
PM             1               6                      102
```

8 The next step depends on the type of PM that is in the shelf.

If the PM	Do
is an OAU	step 9
is MTM, STM, or TM	step 13

9 To post the OAU, type

>POST OAU pm_no

and press the Enter key.

where

pm_no
is the number of the PM (0 to 9999)

Example of a MAP display:

```
            SysB    ManB    OffL    CBsy    ISTb   InSv
 PM            1       0       6       0       0    102
 OAU           1       0       0       0       0      0

OAU     0    SysB
```

10 Determine the state of the OAU.

Note: The state of the OAU appears on the right of the PM number. In the example display in step 9, the OAU is system busy (SysB).

If the OAU	Do
is `Offl`	step 129
is `ManB`	step 40
is other than listed here	step 11

NT0X36
in a cabinetized trunk module equipment frame (continued)

11 A maintenance flag (Mtce) can appear. A Mtce flag indicates that system-initiated maintenance tasks are in progress. Wait until the flag disappears from the status line before you proceed to the next step.

12 To manually busy the PM, type

>BSY

and press the Enter key.

Example of a MAP display:

```
            SysB    ManB    OffL    CBsy    ISTb    InSv
 PM           58       1       6      14      12      17
 OAU           0       1       0       0       0       0

 OAU     0    ManB
 bsy
 OAU 0 Bsy
 OK.
```

Go to step 40.

13 From office records or operating company personnel, verify that essential services do not use the PM resources affected by this procedure.

Note: When you verify resources that are in use, include all PMs that associate with the shelf. For all STMs and TMs, include NT1X80 cards and NT1X81 cards (single-card PMs) on the shelf. Remove these single-card PMs from service to complete this procedure. If the shelf has an STM, check essential services on the STM that is on the other half of the shelf. To complete the procedure, remove both STMs from service.

If essential services	Do
use PM resources, and a minimum of one PM is in service	step 128
use PM resources and all PMs are out of service	step 14
do not use PM resources	step 14

14 To post the PM, type

>POST pm_type pm_no

and press the Enter key.

where

pm_type
is the type of PM (MTM, STM, TM)

pm_no
is the number of the PM (0 to 9999)

Example of a MAP display:

NT0X36
in a cabinetized trunk module equipment frame (continued)

```
          SysB    ManB    OffL    CBsy    ISTb    InSv
PM           1       0       6       0       0     102
MTM          1       0       0       0       0       9

MTM     0    SysB
```

15 Determine the state of the PM.

Note: The PM state appears on the right of the PM number. In the example display in step 14, the PM state is system busy (SysB).

If the PM	Do
is `Offl`	step 129
is other than listed here	step 16

16 To access the TTP level of the MAP display, type

`>MAPCI;MTC;TRKS;TTP`

and press the Enter key.

Example of a MAP display:

```
POST        DELQ            BUSYQ        DIG
TTP  6-013
CKT  TYPE     PM NO.          COM LANG     STA S R  DOT TE  RESULT
```

17 To post the circuits for the PM, type

`>POST  P  pm_type  pm_no`

and press the Enter key.

where

pm_type
is the type of PM (MTM, STM, TM)

pm_no
is the number of the PM (0 to 9999)

Example of a MAP display:

NT0X36
in a cabinetized trunk module equipment frame (continued)

```
POST    17  DELQ            BUSYQ        DIG
TTP  6-013
CKT TYPE     PM NO.          COM LANG     STA S R  DOT TE  RESULT

CONF6    MTM    0  0   CF6P            0  IDL


post p MTM 0
LAST CKT = 17
SHORT CLLI IS: CF6P
OK,CKT POSTED
```

18 Determine if the state of any of the circuits is installation busy (INB). The `INB` on the right of the trunk name on the MAP display indicates installation busy.

Note: Repeat the command NEXT until you determine the state of each circuit.

If	Do
a minimum of one circuit is in the `INB` state	step 19
circuits are not in the `INB` state	step 24

19 Record the name and number of each circuit that is in the `INB` state.

20 To manually busy all posted circuits, type

`>BSY  ALL`

and press the Enter key.

Example of a MAP display:

```
POST    18  DELQ            BUSYQ  A  6  DIG
TTP  6-027
CKT TYPE     PM NO.          COM LANG     STA S R  DOT TE  RESULT


BSYQ ALL IDLE

bsy all
OK,POST SET IS SET IN BSYQ
```

21 Wait until you manually busy all circuits before you proceed. When you manually busy circuits, you remove the circuits from the busy queue.

Note: The digit on the right of the BUSYQ header indicates the number of circuits that remain in use. As a circuit becomes available, you manually busy the circuit and the number in the queue decreases by one. A blank field indicates that all circuits are manual busy.

NT0X36
in a cabinetized trunk module equipment frame (continued)

22 The next action depends if the affected shelf has the NT1X80 enhanced digital recorded announcement machine (EDRAM) card or the NT1X81 conference card.

If the shelf	Do
contains the NT1X80 or the NT1X81	step 23
does not contain the NT1X80 or the NT1X81	step 27

23 To post the circuits for the single-card PM, type

>POST P pm_type pm_no

and press the Enter key.

where

pm_type
is the type of single-card PM (CTM, DTM)

pm_no
is the number of the PM (0 to 9999)

Note: The NT1X80 EDRAM card is a DTM on the MAP display. The NT1X81 conference card is a CTM. Both cards are single-card PMs.

24 To manually busy all posted circuits, type

>BSY ALL

and press the Enter key.

25 Wait until you manually busy all circuits before you proceed to the next step. When you manually busy circuits, you remove the circuits from the busy queue.

26 Repeat steps 23 to 25 for all NT1X80 and NT1X81 cards on the shelf.

27 To access the PM level of the MAP display, type

>PM

and press the Enter key.

28 To post the PM, type

>POST pm_type pm_no

and press the Enter key.

where

pm_type
is the type of PM (MTM, STM, TM)

pm_no
is the number of the PM (0 to 9999)

NT0X36
in a cabinetized trunk module equipment frame (continued)

29 Determine the state of the PM.

If the PM	Do
is `ManB`	step 31
is other than listed here	step 30

30 To manually busy the PM, type

>BSY

and press the Enter key.

Example of a MAP display:

```
          SysB    ManB    OffL    CBsy    ISTb    InSv
PM          58       1       6      14      12      17
MTM          0       1       0       0       0       9

MTM     0    ManB
bsy
MTM 0 Bsy
OK.
```

31 The next action depends if the shelf is either the NT1X80 EDRAM card or the NT1X81 conference card.

If the shelf	Do
contains the NT1X80 or the NT1X81	step 32
does not contain the NT1X80 or the NT1X81	step 36

32 To post the single-card PM, type

>POST pm_type pm_no

and press the Enter key.

where

pm_type
is the type of single-card PM (CTM, DTM)

pm_no
is the number of the PM (0 to 9999)

33 Determine the state of the single-card PM.

If the PM	Do
is `ManB`	step 35
is other than listed here	step 34

NT0X36
in a cabinetized trunk module equipment frame (continued)

34 To manually busy the single-card PM, type

>BSY

and press the Enter key.

35 Repeat steps 32 to 34 for all NT1X80 and NT1X81 cards on the shelf.

36 The next action depends if the shelf contains an STM.

If the shelf	Do
contains an STM, and you manually busied only one STM	step 37
contains an STM, and you manually busied both STMs	step 38

37

> **WARNING**
> **Loss of service**
> If you turn off an STM, the mate power converter in the other STM on the shelf trips. Make sure that you manually busy and turn off STMs on a shelf.

Repeat steps 14 to 36 for the STM in the other half of the shelf.

38 The next action depends on how many shelves with PMs associate with the FSP that you replace.

If	Do
one shelf equipped with PMs associates with the card	step 40
two shelves equipped with PMs associate with the card, and you turned down functionality for only one shelf	step 39
two shelves equipped with PMs associate with the card, and you turned down functionality for both shelves	step 40

39 Repeat steps 6 to 38 for PMs in the other shelf that associates with the FSP card that you replace. Go to step 40.

NT0X36
in a cabinetized trunk module equipment frame (continued)

At the shelf

40

> **WARNING**
> **Static electricity damage**
> Wear a wrist strap that connects to the wrist-strap grounding point of a frame supervisory panel (FSP) or a modular supervisory panel (MSP) to handle circuit cards. The wrist strap protects the cards against static electricity damage.

Select a shelf to power down.

41 Pull down and set the handle of the POWER switch on the power converter to the OFF position.

42 The next action depends on the type of PM that is in the shelf.

If the shelf	Do
contains an STM (with or without DRAM)	step 43
contains an MTM (with or without DRAM)	step 44
contains a TM	step 45

43 For the mate power converter in the STM, pull down and set the handle of the POWER switch to the OFF position.

Go to step 45.

44 For the other power converter on the shelf, pull down and set the handle of the POWER switch to the OFF position.

45 The next action depends on how many shelves with PMs associate with the FSP card you replace.

If	Do
one shelf equipped with PMs associates with the card	step 47
two shelves equipped with PMs associate with the card, and you powered down only one shelf	step 46
two shelves equipped with PMs associate with the card, and you powered down both shelves	step 47

46 Repeat steps 41 to 45 for PMs in the other shelf that associates with the FSP card you replace. Go to step 47.

NT0X36
in a cabinetized trunk module equipment frame (continued)

At the FSP

47 Remove the alarm and control card.

48 Insert the replacement alarm and control card.

49 Close the FSP.

50 Tighten the slotted nut on the FSP.

51 Select a shelf to power up.

At the shelf

52 Power up the converter.

- **a** Pull up and set the handle of the POWER switch to the ON position.
- **b** Press and hold the RESET button on the power converter until the CONVERTER FAIL LED turns off.
- **c** Release the RESET button.

53 The next action depends on the type of PM that is in the shelf, and if you powered up both power converters.

If the shelf	Do
contains an STM or an MTM (with or without DRAM) and you powered up both power converters	step 58
contains an STM (with or without DRAM)	step 54
contains an MTM (with or without DRAM)	step 55
contains a TM	step 58

54 For the mate power converter in the STM on the other half of the shelf, repeat steps 52 and 53. Go to step 56.

55 For the other power converter on the shelf, repeat steps 52 and 53. Go to step 56.

56 The next action depends on how many shelves associate with the FSP card you replace.

If	Do
one shelf equipped with PMs associates with the card	step 58
two shelves equipped with PMs associate with the card, and you powered up only one shelf	step 57
two shelves equipped with PMs associate with the card, and you powered up both shelves	step 58

NT0X36
in a cabinetized trunk module equipment frame (continued)

57 Repeat steps 52 to 56 for PMs in the other shelf that associates with the FSP card you replace. Go to step 58.

At the MAP terminal

58 To access the PM level of the MAP display, type

>PM

and press the Enter key.

59 The next step depends on the type of PM in the shelf.

If the PM	Do
is an OAU	step 60
is an STM, TM, or MTM	step 64

60 To post the OAU, type

>POST OAU pm_no

and press the Enter key.

where

pm_no
is the number of the PM (0 to 9999)

61 To load the OAU, type

>LOADPM

and press the Enter key.

Example of a MAP response:

```
OAU 0 LoadPM  Passed
```

If the LOADPM command	Do
passed	step 63
failed	step 62

62 To load the PM, perform the procedure *Loading a PM* in this document. Complete the procedure and return to this point.

63 To return the PM to service, type

>RTS

and press the Enter key.

Example of a MAP response:

NT0X36
in a cabinetized trunk module equipment frame (continued)

```
OAU 0 Rts Passed
```

If the RTS command	Do
passed	step 124
failed	step 130

64 To post the PM, type

>POST pm_type pm_no

and press the Enter key.

where

pm_type
is the type of PM (IMTM, STM, TM)

pm_no
is the number of the PM (0 to 9999)

65 To load the PM, type

>LOADPM

and press the Enter key.

Example of a MAP response:

```
MTM 0 LoadPM  Passed
```

If the LOADPM command	Do
passed	step 67
failed	step 66

66 To load the PM, perform the procedure *Loading a PM* in this document. Complete the procedure and return to this point.

67 To return the PM to service, type

>RTS

and press the Enter key.

Example of a MAP response:

```
MTM 0 Rts Passed
```

If the RTS command	Do
passed, and the PM is `InSv`	step 76

NT0X36
in a cabinetized trunk module equipment frame (continued)

If the RTS command	Do
passed, and the PM is `ISTb` with a system-generated card list	step 68
failed	step 130

68 Record the messages on the MAP display for future reference.

69 The next action depends on if the affected shelf contains the NT1X80 (EDRAM) card or the NT1X81 conference card.

If the shelf	Do
contains the NT1X80 or the NT1X81	step 70
does not contain the NT1X80 or the NT1X81	step 76

70 To post the single-card PM, type

`>POST pm_type pm_no`

and press the Enter key.

where

pm_type
is the type of PM (CTM or DTM)

pm_no
is the number of the PM (0 to 9999)

71 To load the single-card PM, type

`>LOADPM`

and press the Enter key.

Example of a MAP response:

```
DTM 0 LoadPM  Passed
```

If the LOADPM command	Do
passed	step 73
failed	step 72

72 To load the single-card PM, perform the procedure *Loading a PM* in this document. Complete the procedure and return to this point.

73 To return the PM to service, type

`>RTS`

and press the Enter key.

Example of a MAP response:

NT0X36
in a cabinetized trunk module equipment frame (continued)

```
MTM 0 Rts Passed
```

If the RTS command	Do
passed, and the PM is `InSv`	step 75
passed, and the PM is `ISTb` with a system-generated card list	step 74
failed	step 130

74 Record the messages on the MAP display for future reference.

75 Repeat steps 70 to 74 for the other NT1X80 and NT1X81 cards on the shelf. Go to step 76.

76 To access the TTP level of the MAP display, type

`>TRKS;TTP`

and press the Enter key.

77 The next action depends if the shelf associated with the FSP card you replace contains a metallic test unit (MTU) or digital test unit (DTU).

Note: The DTUs and MTUs are in pairs.

If the shelf	Do
has MTUs	step 78
has DTUs	step 93
does not have MTUs or DTUs	step 108

78 To post the first circuit in the MTU, type

`>POST G MTU circuit_no`

and press the Enter key.

where

circuit_no
is the number of the first MTU circuit

79 To busy the circuit, type

`>BSY`

and press the Enter key.

80 To seize the circuit, type

`>SEIZE`

and press the Enter key.

NT0X36
in a cabinetized trunk module equipment frame (continued)

81 To put the circuit on hold, type

`>HOLD`

and press the Enter key.

82 To post the second circuit in the MTU, type

`>NEXT`

and press the Enter key.

83 To busy the circuit, type

`>BSY`

and press the Enter key.

84 To seize the circuit, type

`>SEIZE`

and press the Enter key.

85 To put the circuit on hold, type

`>HOLD`

and press the Enter key.

86 To access the disk utility, type

`>DISKUT`

and press the Enter key.

87 To list the files in the volume that contains the MTU load, type

`>LISTFL vol_name`

and press the Enter key.

where

vol_name
is the name of the volume that contains the MTU load

88 Record the name of the MTU load file.

89 To quit the disk utility, type

`>QUIT`

and press the Enter key.

90 To load the MTU, type

`>LOADFW CC load_name`

and press the Enter key.

where

NT0X36
in a cabinetized trunk module equipment frame (continued)

load_name
is the load file name that you recorded in step 88

If the LOADFW command	Do
passed	step 91
failed	step 130

91 To release the first MTU circuit, type

>RLS MTU circuit_no

and press the Enter key.

where

circuit_no
is the number of the first MTU circuit that you busied, seized,and put on hold

92 To release the second MTU circuit, type

>RLS MTU circuit_no

and press the Enter key.

where

circuit_no
is the number of the second MTU circuit that you busied,seized, and put on hold

Go to step 108.

93 To post the first circuit in the DTU, type

>POST G DTU circuit_no

and press the Enter key.

where

circuit_no
is the number of the first DTU circuit

94 To busy the circuit, type

>BSY

and press the Enter key.

95 To seize the circuit, type

>SEIZE

and press the Enter key.

96 To put the circuit on hold, type

>HOLD

and press the Enter key.

NT0X36
in a cabinetized trunk module equipment frame (continued)

97 To post the second circuit in the DTU, type

`>NEXT`

and press the Enter key.

98 To busy the circuit, type

`>BSY`

and press the Enter key.

99 To seize the circuit, type

`>SEIZE`

and press the Enter key.

100 To put the circuit on hold, type

`>HOLD`

and press the Enter key.

101 To access the disk utility, type

`>DISKUT`

and press the Enter key.

102 To list the files in the volume that contains the DTU load, type

`>LISTFL vol_name`

and press the Enter key.

where

vol_name
is the name of the volume that contains the MTU load

103 Record the name of the DTU load file.

104 To quit the disk utility, type

`>QUIT`

and press the Enter key.

105 To load the DTU, type

`>LOADFW CC load_name`

and press the Enter key.

where

load_name
is the load file name that you recorded in step 103

If the LOADFW command	Do
passed	step 106
failed	step 130

NT0X36
in a cabinetized trunk module equipment frame (continued)

106 To release the first DTU circuit, type

>RLS RLS

107 To release the second DTU circuit, type

>RLS RLS

108 To post the circuits for the PM, type

>POST TM pm_type pm_no

and press the Enter key.

where

pm_type
is the type of PM (MTM, STM, TM)

pm_no
is the number of the PM (0 to 9999)

109 To return all the circuits to service, type

>RTS ALL

and press the Enter key.

Example of a MAP response:

```
RTS OK
```

110 The next action depends if you recorded INB circuits in step 19.

If you	Do
recorded INB circuits	step 111
did not record INB circuits	step 114

111 To post the first circuit on the list, type

>POST T circuit_name circuit_no

and press the Enter key.

where

circuit_name
is the circuit name that you recorded in step 19

circuit_no
is the circuit number that you recorded in step 19

112 To return the circuit to the INB state, type

>BSY INB

and press the Enter key.

113 Repeat steps 111 and 112 for each of the other circuits on the list that you recorded in step 19.

NT0X36
in a cabinetized trunk module equipment frame (continued)

114 The next action depends on the results of the PM that you returned to service in step 67.

If the RTS command	Do
passed	step 121
passed, but in-service tests failed, and the system generated a card list	step 115

115 To manually busy all posted circuits, type

>BSY ALL

and press the Enter key.

116 To return all circuits to service, type

>RTS ALL

and press the Enter key.

117 To access the PM level of the MAP display, type

>PM

and press the Enter key.

118 To post the PM, type

>POST pm_type pm_no

and press the Enter key.

where

pm_type
is the type of PM (CTM, DTM, MTM, STM, TM)

pm_no
is the number of the PM (0 to 9999)

119 To perform an in-service test on the PM, type

>TST

and press the Enter key.

Example of a MAP response:

NT0X36
in a cabinetized trunk module equipment frame (continued)

```
MTM     0    ISTb           TSTFAIL

InSvce Tests Initiated
MTM 0 Tst Failed
 Site Flr RPos  Bay_id   Shf  Description    Slot     EqPEC
 HOST  00  D06  TME  00   04  MTM : 000      04       2X59
 HOST  00  D06  TME  00   04  MTM : 000      02       0X70
Following ISTb Exist :
Test Failed
```

If the TST command	Do
passed, and single-card PMs or an STM remain out of service	step 121
passed, and you worked on all PMs on the shelf and all PMs have been returned to service	step 124
passed, and you worked on all PMs on the shelf but one or more PMs have not been successfully returned to service	step 130
failed, and single-card PMs or an STM are present that you did not work on to return to service	step 120
failed, and you worked on all PMs on the shelf	step 130

120 Record the messages on the MAP display for future reference.

121 To access the PM level of the MAP display, type

>PM

and press the Enter key.

122 To post the PM, type

>POST pm_type pm_no

and press the Enter key.

where

pm_type
is the type of PM (MTM, STM, TM)

pm_no
is the number of the PM (0 to 9999)

123 Repeat steps 64 to 119 for other PMs on this shelf. Go to step 124.

NT0X36
in a cabinetized trunk module equipment frame (end)

124 The next action depends on how many shelves associate with the FSP card you replace.

If	Do
one shelf equipped with PMs associates with the card	step 126
two shelves equipped with PMs associate with the card, and you returned to service the PM on only one shelf	step 125
two shelves equipped with PMs associate with the card, and you returned to service the PM on both shelves	step 126

125 Repeat steps 59 to 124 for PMs in the other shelf that associates with the FSP card you replace. Go to step 126.

126 The next action depends on the reason that you perform this procedure.

If a maintenance procedure	Do
directed you to this procedure	step 127
did not direct you to this procedure	step 131

127 Return to the maintenance procedure that directed you to this procedure and continue as directed.

128 To determine how to handle essential services, consult the next level of support. Continue as directed by operating company personnel.

129 To determine why the component is offline, consult operating company personnel. Continue as directed by operating company personnel.

130 For additional help, contact the next level of support.

131 The procedure is complete.

NT0X36
in an input/output equipment frame

Application

Use this procedure to replace an NT0X36 in an input/output equipment (IOE) frame, as listed in the following table.

PEC	Suffix	Card name	Shelf or frame name
NT0X36	AB	Power control and alarm card	IOE frame

Note: Shelf positions 04, 18, and 32 must contain an input/output controller (IOC) or a disk drive unit (DDU). Shelf positions 55 and 61 must contain a magnetic tape drive unit. A maximum of two of the three shelf positions can be unequipped and covered with filler faceplates. If the shelf positions in the IOE frame in your office have other subsystems or applications, contact the next level of support.

Refer to the “Index", if you cannot identify the following features for the card that you want to replace:

- product engineering code (PEC)
- PEC suffix
- provisioned shelf
- provisioned frame

The “Index" provides a list of the cards, shelves, and frames documented in this card replacement book.

Common procedures

There are no common procedures.

Action

This procedure contains a summary flowchart and a list of steps. Use the flowchart to review the procedure. Follow the steps to perform the procedure.

NT0X36
in an input/output equipment frame (continued)

Summary of Replacing a NT0X36 in an input/output equipment frame

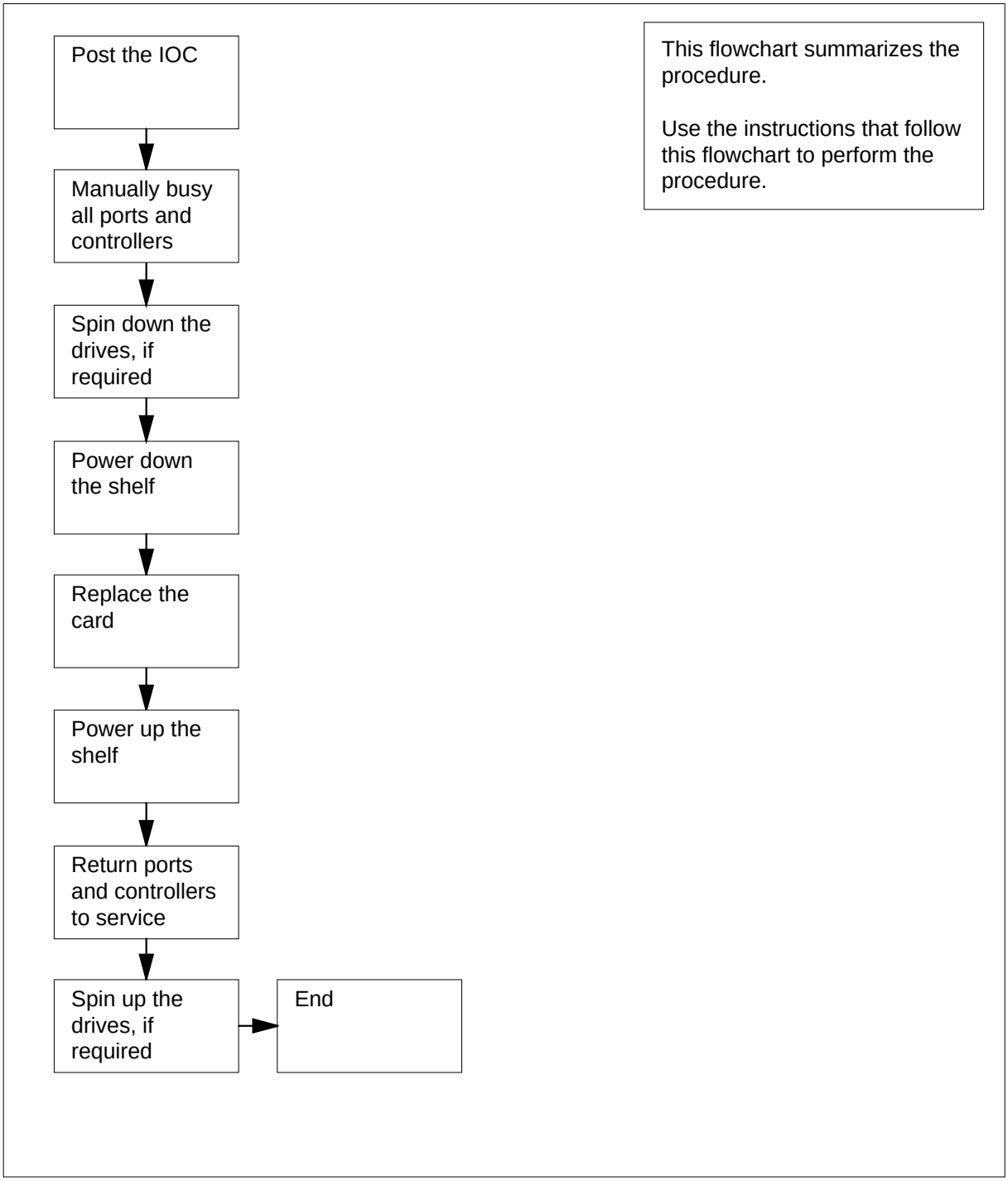

NT0X36
in an input/output equipment frame (continued)

Replacing NT0X36 in an input/output equipment frame

At your current location

1

ATTENTION

This includes directions to manually busy all terminal controller cards for the IOC. Perform this procedure from a MAP terminal. Make sure that the MAP terminal does not connect to the IOC in use.

CAUTION

Potential loss of service

This procedure includes directions to manually busy an IOC and IOC device controllers or a DDU. Perform this procedure only if you need to restore out-of-service components. If you do not need to restore out-of-service components, perform this procedure during periods of low traffic.

DANGER

Risk of electrocution

Some of the terminals inside the frame supervisory panel (FSP) have an electrical potential of -48 V dc. Make sure that you remove all jewelry before you replace a card in the FSP. Do not touch any terminal inside the FSP.

Obtain a replacement card. Make sure that the replacement card and the card that you remove have the same PEC and PEC suffix.

NT0X36
in an input/output equipment frame (continued)

At the frame

2 Use the following table to identify the PWR&ALM slot, shelf positions, and fuses that associate with the card you replace.

Note: The alarm, control cards, and fuses are behind the FSP.

Alarm and control card	Slot	Shelf position	Fuse
NT0X36AB	slot 1	04	03
NT0X36AB	slot 1	32	01
NT0X36AB	slot 2	18	02

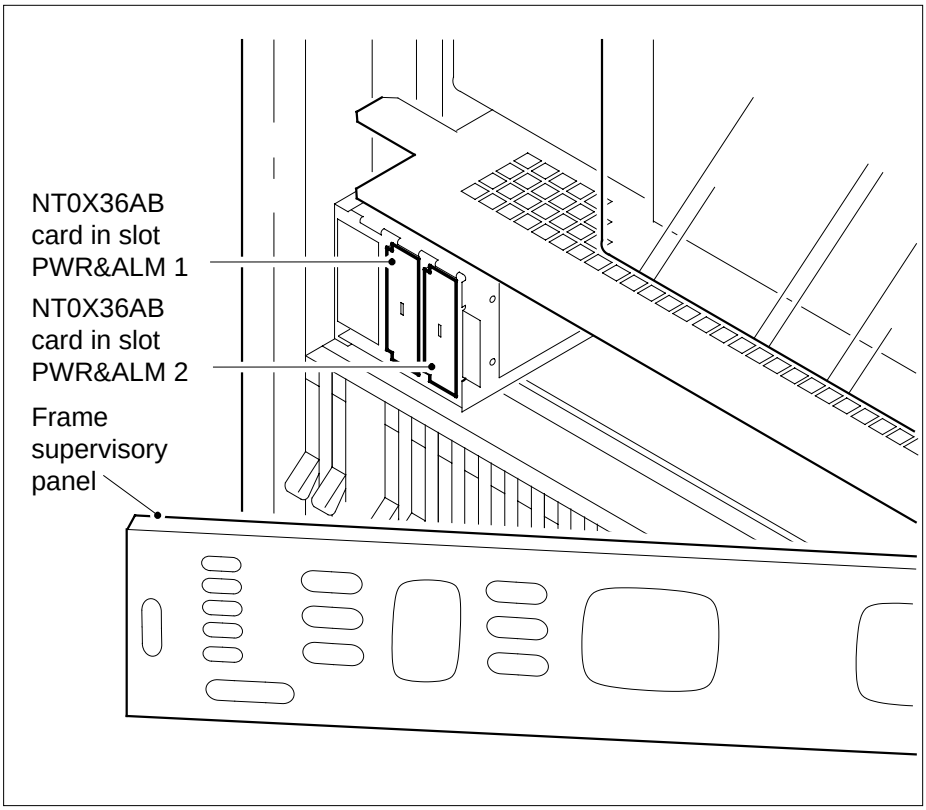

3 Record the PWR&ALM slot, shelf positions, and fuses that associate with the card you replace.

NT0X36
in an input/output equipment frame (continued)

4 Examine the shelf positions that associate with the card you replace. Record the type of equipment shelves provided.

Note: If you replace the card in slot PWR & ALM 1, you can be required to manually busy functionality in a maximum of two shelves.

At the MAP terminal

5 To access the IOD level of the MAP display, type

`>MAPCI;MTC;IOD`

and press the Enter key.

6 To post the input/output controller (IOC), type

`>IOC ioc_no`

and press the Enter key.

where

ioc_no
is the number of the IOC (0 to 19)

7 Select a shelf position from the list that you recorded at step 3.

If the shelf	Do
contains one or two DDUs	step 8
contains an IOC	step 16
is empty	step 46
contains an item other than listed here	step 95

8 To post the DDU controller, type

`>CARD card_no`

and press the Enter key.

where

card_no
is the card identification number (0 to 8)

Example of a MAP display:

NT0X36
in an input/output equipment frame (continued)

```
IOD
IOC  0  1  2  3
STAT .  .  .  .

DIRP: AMA  B XFER:   .    SLM : SLMbsy NOP :   .    NX25:
MLP :   .    DPPP:   .    DPPU:   .    SCAI:   .

IOC   CARD    0     1     2     3     4     5     6     7
 0    PORT  0123  0123  0123  0123  0123  0123  0123  0123
0123
      STAT  .---  .---  ....  .---  ....  ----  ..--  .---
----
      TYPE  MTD   DDU   CONS  MPC   CONS        CONS  MPC
Card 0   MTD           0
         TapeName
         Status     Idle
         User
```

9 Determine the state of the DDU controller card.

If the card	Do
is MBSY	step 13
is OFFL	step 87
is other than listed here	step 10

10 To determine if files are open on the DDU, type

>ALLOC

and press the Enter key.

Example of a MAP response:

```
VOLID  VOL_NAME  SERIAL_NO  BLOCKS  ADDR  TYPE  R/O  FILES_OPEN

  0    IMAGE        2800     45000  D000    0   NO       0
  1    XPMLOADS     2801     35000  D000    0   NO       0
  2    RTMLOADS     2802     20000  D000    0   NO       0
     .
     .
     .
  7    SMDR         2807      5000  D000    0   NO       0
  8    AMA1         2808      5000  D000    0   NO       0
  9    TST          2809        50  D000    0   NO       0
 10    AMA2         280A       500  D000    0   NO       0
```

NT0X36
in an input/output equipment frame (continued)

If files	Do
are open	step 88
are closed	step 11

11 To manually busy the controller, type

>BSY

and press the Enter key.

12 To spin down the drive, type

>STOP

and press the Enter key.

13 Wait until the DDU spins down before you proceed to the next step. The status code `spun_down` appears under the Drive_State header on the MAP display.

14 The next action depends on the disk drive configuration in the IOC subsystem for your office.

> ***Note:*** If you do not know the file system configuration for your office, contact the next level of support.

If	Do
other DDUs on the shelf are not present	step 46
another DDU is on the shelf, and both DDUs spun down	step 46
another DDU is on the shelf that is not the mate to the DDU that you spun down	step 15
another DDU is on the shelf that is the mate to the DDU that you spun down	step 95

15 Repeat steps 8 to 14 for each disk drive on the shelf. Go to step 46.

16 Determine the state of the IOC.

If the state of the IOC	Do
is `M`	step 46
is other than listed here	step 17

NT0X36
in an input/output equipment frame (continued)

17 The next action depends if terminal controller cards are on the shelf.

If terminal controller cards	Do
are on the shelf	step 18
are not on the shelf	step 24

18 To post the card, type

>CARD card_no

and press the Enter key.

where

card_no
is the card identification number (0 to 8)

Example of a MAP display:

```
IOD
IOC  0  1  2  3
STAT .  .  .  .

DIRP: AMA  B XFER:   .    SLM : SLMbsy NOP :   .    NX25:   .
MLP :   .    DPPP:   .    DPPU:   .    SCAI:   .

IOC   CARD    0     1     2     3     4     5     6     7     8
 0    PORT  0123  0123  0123  0123  0123  0123  0123  0123  0123

      STAT  .---  .---  ....  .---  ....  ----  ..--  .---
----
      TYPE  MTD   DDU   CONS  MPC   CONS        CONS  MPC
Card   6   Ckt      0         1         2         3
Status             .         .         -         -
Cons Id          RD040     RD041     TEAM4     TEAM6
ConType          VT100     VT100     VT100     VT100
```

19 Note the CONS ID and status for each port.

If	Do
all ports are `ManBsy`	step 23
a minimum of one port is `Offl`	step 87
a minimum of one port is `.` (dot)	step 20
all ports are in any other out-of-service state	step 21

20 Inform operating company personnel that you will remove from service the CONS IDs for the card you replace.

NT0X36
in an input/output equipment frame (continued)

21 To manually busy a port on the card, type

>BSY port_no

and press the Enter key.

where

port_no
is the port identification number (0 to 3)

If the BSY command	Do
passed	step 22
failed	step 95

22 Repeat step 21 until you manually busy all ports on the card. Go to step 23.

23 Repeat steps 18 to 22 for each terminal controller card on the shelf. Go to step 24.

24 The next action depends on if multiprotocol controller (MPC) cards are on the shelf.

If MPC cards	Do
are on the shelf	step 25
are not on the shelf	step 32

25 To post the card, type

>CARD card_no

and press the Enter key.

where

card_no
is the card identification number (0 to 8)

Example of a MAP display:

NT0X36
in an input/output equipment frame (continued)

```
IOD
IOC  0  1  2  3
STAT .  .  .  .

DIRP: AMA  B XFER:   .   SLM : SLMbsy NOP :   .    NX25:   .
MLP :   .    DPPP:   .   DPPU:   .    SCAI:   .

IOC   CARD    0     1     2     3     4     5     6     7     8
 0    PORT  0123  0123  0123  0123  0123  0123  0123  0123  0123
      STAT  .---  .---  ....  .---  ....  ----  ..--  .---  ----
      TYPE  MTD   DDU   CONS  MPC   CONS        CONS  MPC

Card 3   Unit          0
         User      SYSTEM    BOARD  LINK0  LINK1  LINK2   LINK3
         Status      Ready   COMACT UNEQ   N/A    UNEQ    ENABLD
```

26 Determine the state of the card.

If the card state	Do
is MANB	step 31
is OFFL	step 87
is other than listed here	step 27

Note: The card state appears under the BOARD header on the MAP display.95 95

27 To display status information on current MPC conversations, type

>QCONV

and press the Enter key.

Example of a MAP response:

```
MPC  L  LCN  STATUS    CCC  SEC  PARDEV  INP  OPEN OWNER
---  -  --- --------- ---- ---- ------  ---- ---- --------
  0  3    1 INACTIVE  none none none     FIL    0 none
  0  3    2 INACTIVE  none none none     FIL    0 none
```

If	Do
a minimum of one session is active	step 28

NT0X36
in an input/output equipment frame (continued)

If	Do
all sessions are inactive	step 29

28 Notify all users that an interruption of the MPC service will occur. Wait until all sessions are inactive before you proceed.

29 To manually busy the card and the card links, type

>BSY ALL FORCE

and press the Enter key.

Example of a MAP response:

```
TYPE YES TO VERIFY FORCE, NO TO CANCEL COMMAND
Please confirm ("YES", "Y", "NO", or "N"):
```

30 To confirm the command, type

>YES

and press the Enter key.

If the BSY command	Do
passed	step 31
failed	step 95

31 Repeat steps 25 to 30 for each MPC card on the shelf. Go to step 32.

32 The next action depends if disk drive controller cards are on the shelf.

If disk drive controller cards	Do
are on the shelf	step 33
are not on the shelf	step 17

33 To post the card, type

>CARD card_no

and press the Enter key.

where

card_no
is the card identification number (0 to 8)

Example of a MAP display:

NT0X36
in an input/output equipment frame (continued)

```
IOD
IOC  0  1  2  3
STAT .  .  .  .

DIRP: AMA  B XFER:   .    SLM : SLMbsy NOP :   .    NX25:   .
MLP :   .    DPPP:   .    DPPU:   .    SCAI:   .

IOC   CARD    0     1     2     3     4     5     6     7     8
 0    PORT  0123  0123  0123  0123  0123  0123  0123  0123
0123
      STAT  .---  .---  ....  .---  ....  ----  ..--  .---
----
      TYPE  MTD   DDU   CONS  MPC   CONS        CONS  MPC
Card 0   MTD           0
         TapeName
         Status     Idle
         User
```

34 Determine the state of the card.

If the card	Do
is MBSY	step 37
is OFFL	step 87
is other than listed here	step 35

35 To determine if files are open on the DDU, type

>ALLOC

and press the Enter key.

Example of a MAP response:

```
VOLID  VOL_NAME  SERIAL_NO  BLOCKS  ADDR  TYPE  R/O
FILES_OPEN
  0    IMAGE        2800     45000  D000    0   NO       0
  1    XPMLOADS     2801     35000  D000    0   NO       0
  2    RTMLOADS     2802     20000  D000    0   NO       0
       .
       .
       .
  7    SMDR         2807      5000  D000    0   NO       0
  8    AMA1         2808      5000  D000    0   NO       0
  9    TST          2809        50  D000    0   NO       0
 10    AMA2         280A       500  D000    0   NO       0
```

NT0X36
in an input/output equipment frame (continued)

If files	Do
are open	step 88
are closed	step 36

36 To manually busy the card, type

>BSY

and press the Enter key.

Example of a MAP response:
bsyOK

37 Repeat steps 33 to 36 for each disk drive controller card on the shelf. Go to step 38.

38 The next action depends on if magnetic tape drive controller cards are on the shelf.

If magnetic tape drive controller cards	Do
are on the shelf	step 39
are not on the shelf	step 44

39 To post the card, type

>CARD **card_no**

and press the Enter key.

where

card_no
is the card identification number (0 to 8)

Example of a MAP display:

NT0X36
in an input/output equipment frame (continued)

```
IOD
IOC  0  1  2  3
STAT .  .  .  .

DIRP: AMA  B XFER:   .    SLM : SLMbsy NOP :   .    NX25:
MLP :   .    DPPP:   .    DPPU:   .    SCAI:   .

IOC   CARD    0     1     2     3     4     5     6     7
 0    PORT  0123  0123  0123  0123  0123  0123  0123  0123
0123
      STAT  .---  .---  ....  .---  ....  ----  ..--  .---
----
      TYPE  MTD   DDU   CONS  MPC   CONS        CONS  MPC
Card 0   MTD           0
         TapeName
         Status     Idle
         User
```

40 Determine the state of the card.

If the card	Do
is `ManBsy`	step 43
is `Offl`	step 87
is `Idle`	step 42
is other than listed here	step 41

41 Notify all users that interruption of service for the device will occur. Wait until all users finish with the device before you proceed to the next step.

42 To manually busy the card, type

>BSY

and press the Enter key.

Example of a MAP response:

```
 bsy
 OK
```

43 Repeat steps 39 and 42 for each magnetic tape drive controller card on the shelf. Go to step 31.

44 To return to the IOC level of the MAP display, type

>QUIT

and press the Enter key.

45 To manually busy the IOC, type

>BSY IOC

NT0X36
in an input/output equipment frame (continued)

and press the Enter key.

46 The next action depends on the FSP card you replace.

If you	Do
replace the card in slot PWR&ALM 1	step 47
replace the card in slot PWR&ALM 2	step 48

47 Repeat step 7 for the second shelf position that you recorded at step 3. Go to step 48.

At the frame

48

> **WARNING**
> **Static electricity damage**
> Wear a wrist strap that connects to the wrist-strap grounding point of a frame supervisory panel (FSP) or a modular supervisory panel (MSP) to handle circuit cards. The wrist strap protects the cards against static electricity damage.

For each power converter on the shelf, pull down and set the handle of the power converter POWER switch to the OFF position.

49 Remove the fuses that associate with the alarm and control card, as recorded in step 3.

50 Unscrew the slotted nut on the left of the FSP.

Note: Friction clips fasten some FSP front panels. Hold the panel at each end. To remove the panel, pull the panel toward you.

51 Open the FSP.

52

> **WARNING**
> **Loss of service**
> Make sure that the alarm and control card that you remove controls the shelf that you turned down. Removal of the wrong card causes a loss of service.

Remove the card from the slot that you recorded in step 3.

53 Insert the replacement card.

NT0X36
in an input/output equipment frame (continued)

54 Close the FSP.

Note: For FSP front panels fastened with friction clips, align the pins on the back of the panel with the holes on the FSP. Press the panel in tightly.

55 Tighten the slotted nut on the FSP.

56 Insert the fuses that you removed in step 49.

57 The next action depends on the power converter on the shelf.

If the power converter	Do
is an NT2X70AA/AB/AC/AD card	step 58
is an NT2X70AE card	step 59
is an NT1X78 card	step 60

58 Power up the converter.

a Pull up and set the handle of the POWER switch to the RESET position. Hold the handle until the CONVERTER FAIL LED turns off.

b Release the handle.

c Go to step 61.

59 Power up the converter, as follows.

a Pull up and set the handle of the POWER switch to the ON position.

b Press and hold the RESET button on the power converter until the CONVERTER FAIL LED turns off.

c Release the RESET button.

d Go to step 61.

60 Reset the power converter:

a Pull up and set the POWER switch on the converter to the ON position.

b Press and hold the RESET button on the power converter.

c When the CONVERTER FAIL lamp turns off, release the RESET button.

61 Verify that the power LED is lit. A lit power LED indicates that the power converter is ON.

If the power LED	Do
is lit, and is the only power converter on the shelf (IOC shelf or a single-DDU shelf)	step 63
is lit, and another power converter is on the shelf (two-DDU shelf)	step 62
is not lit	step 95

NT0X36
in an input/output equipment frame (continued)

62 Repeat step 57 for the other power converter on the shelf.

At the MAP terminal

63 Select a shelf position from the list that you recorded at step 3.

If the shelf	Do
has one or two DDUs	step 64
has an IOC	step 68

64 To post the DDU controller, type

>CARD card_no

and press the Enter key.

where

card_no
is the card identification number (0 to 8)

65 To return the DDU controller to service, type

>RTS

and press the Enter key.

Note: The return to service process can require a maximum of 3 min. The RTS command also spins up the disk drive.

If the RTS command	Do
passed (status is `Ready` and drive state is `on-line`)	step 66
failed (status or drive state is other than listed here)	step 95

66 The next action depends on the disk drive configuration in the IOC subsystem for your office.

If	Do
other DDUs are not on the shelf	step 84
another DDU is on the shelf and both are in service	step 84
another DDU is on the shelf that you did not return to service	step 67

67 Repeat steps 64 to 66 for each disk drive on the shelf. Go to step 83.

68 To return the IOC to service, type

>RTS IOC

and press the Enter key.

NT0X36
in an input/output equipment frame (continued)

69 The next action depends if the controller cards are on the shelf.

If disk drive or magnetic tape drive or magnetic tape drive controller cards	Do
are on the shelf	step 70
are not on the shelf	step 73

70 To post the card, type

>CARD card_no

and press the Enter key.

where

card_no
is the card identification number (0 to 8)

71 To return the card to service, type

>RTS

and press the Enter key.

72 Repeat steps 70 and 71 for each disk drive or magnetic tape drive controller card on the shelf. Go to step 73.

73 The next action depends if MPC cards are on the shelf.

If MPC cards	Do
are on the shelf	step 74
are not on the shelf	step 80

74 To post the card, type

>CARD card_no

and press the Enter key.

where

card_no
is the card identification number (0 to 8)

75 To load the MPC, type

>DOWNLD

and press the Enter key.

Example of a MAP response:

NT0X36
in an input/output equipment frame (continued)

```
DOWNLOAD OF TABLE MPC FILE "MPC403AB" SUCCEEDED.
```

If the DOWNLD command	Do
passed	step 76
failed	step 95

76 To return the MPC to service, type

>RTS ALL

and press the Enter key.

Example of a MAP response:

```
REQUEST PASSED FOR CARD.REQUEST PASSED FOR LINKS.
```

77 Wait 1 min to determine the status of MPC components.

If the system status	Do
is `Ready`, the board status is `COMACT`, and the link status is `ENABLD` for each link	step 78
is other than listed here	step 95

78 Repeat steps 74 to 77 for each card on the shelf. Go to step 79.

79 Notify users that MPC service is available.

80 The next action depends if terminal controller cards are on the shelf.

If terminal controller cards	Do
are on the shelf	step 81
are not on the shelf	step 83

81 To post the card, type

>CARD card_no

and press the Enter key.

where

card_no
is the card identification number (0 to 8)

82 To return a port on the card to service, type

>RTS port_no

and press the Enter key.

NT0X36
in an input/output equipment frame (continued)

where

port_no
is the port identification number (0 to 3)

If the RTS command	Do
passed	step 83
failed	step 95

83 The next action depends on the FSP card that you replace.

If you	Do
replace the card in slot PWR&ALM 1	step 84
replace the card in slot PWR&ALM 2	step 85

84 Repeat step 63 for the second shelf position that you recorded in step 3. Go to step 85.

85 The next action depends on the reason that you perform this procedure.

If a maintenance procedure	Do
directed you to this procedure	step 86
did not direct you to this procedure	step 96

86 Return to the maintenance procedure that directed you to this procedure and continue as directed.

87 To determine why the component is offline, consult operating company personnel. Continue as directed by operating company personnel.

88

WARNING
Loss of data
If files are open do not busy the controller. If you busy the controller while files are open, billing data will be lost. For additional help, contact the next level of support.

If device independent recording package (DIRP) volumes are open, the following events occur:

- the DDU drops SysB
- billing data is lost
- open Logutil files are lost or corrupted

NT0X36
in an input/output equipment frame (end)

Before starting card replacement procedures, close the DIRP volumes. Close files from DIRP and demount active volumes from the DDU. Use the procedure, “Deallocating Recording Volumes in the DIRP Utility" in *Routine Maintenance Procedures*.

89 Stop files recording to and from the Logutil. Type the following command at the Logutil command level:

>LOGUTIL;LISDEVS

and press the Enter key.

90 Close files on volumes on the DDU of the IOC.

>STOPDEV dev_name

and press the Enter key.

where

dev_name
is the name of the device

>QUIT

and press the Enter key.

91 Repeat the ALLOC command to determine if files are closed, by typing

>ALLOC

and pressing the Enter key.

If the files	Do
are open	step 92
are closed	step 93

92 Confirm that you have done steps 88 to 91. If the files are still open, contact your next level of support.

93 Manually busy the DDU, by typing

>BSY

and pressing the Enter key.

If the DDU	Do
is MBSY	step 94
is not MBSY	step 95

94 When cards are replaced and the DDU is in service, open the files. Use the procedure “Allocating Recording Volumes in the DIRP Utility" in *Routine Maintenance Procedures*.

95 For additional help, contact the next level of support.

96 The procedure is complete.

NT0X36 in an international cabinet auxiliary module

Application

Use this procedure to replace an NT0X36 in an international cabinet auxiliary module (ICAM), as listed in the following table.

If you cannot identify the product engineering code (PEC), suffix, or provisioned shelf or frame for the card you want to replace, refer to the “Index" for a list of the cards, shelves, and frames documented in this card replacement book.

PEC	Suffix	Card name	Shelf or frame name
NT0X36	AB	Power control and alarm card	CAM equipped with office alarm unit (OAU), international packaged trunk module (IPTM) or international maintenance trunk module (IMTM).

Common procedures

Loading a PM is referenced in this procedure.

Do not go to the common procedure unless directed to do so in the step-action procedure.

Action

The following flowchart is only a summary of the procedure. To replace the card, use the instructions in the step-action procedure that follows the flowchart.

NT0X36
in an international cabinet auxiliary module (continued)

Summary of Replacing an NT0X36 in an international cabinet auxiliary module

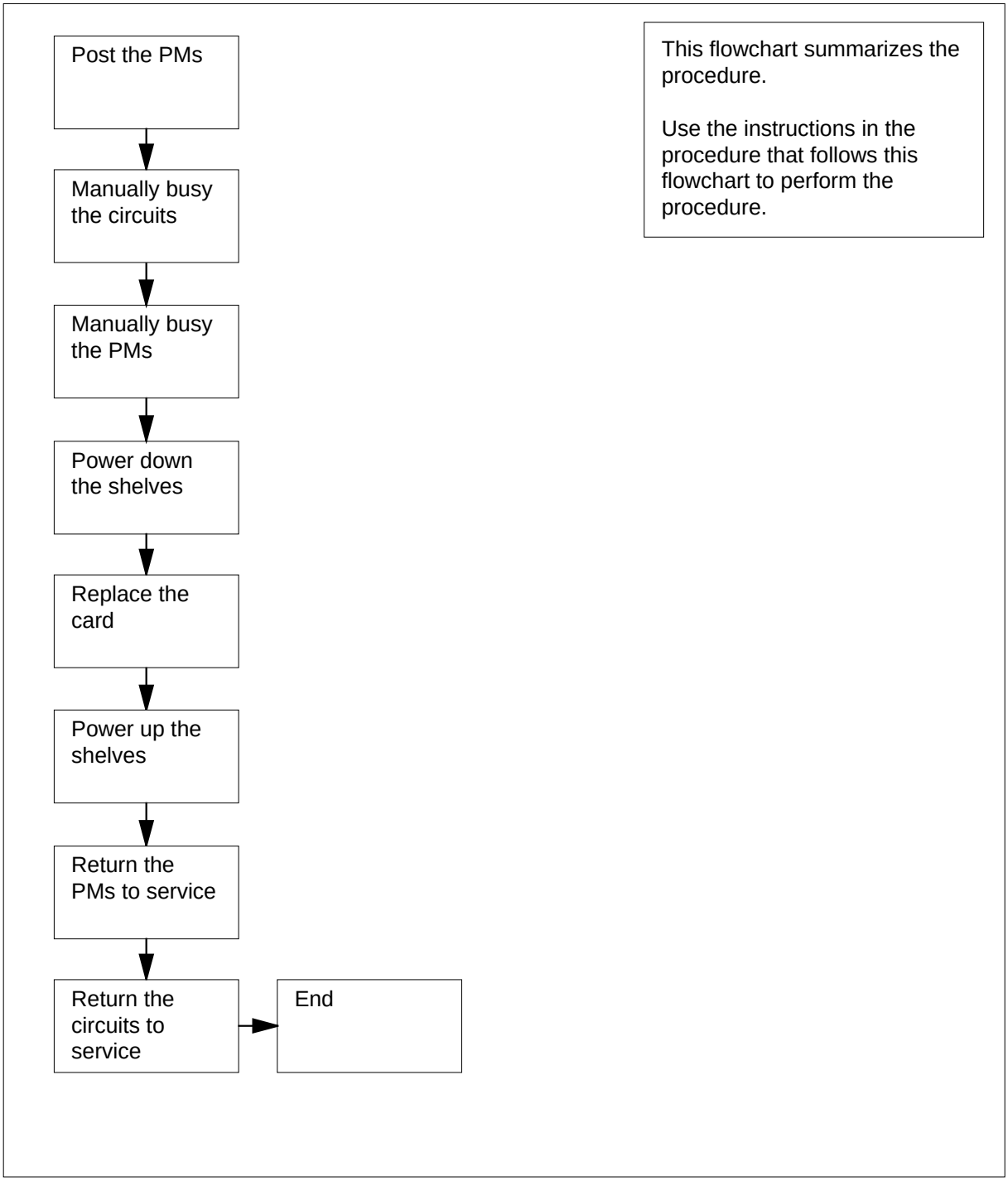

NT0X36
in an international cabinet auxiliary module (continued)

Replacing an NT0X36 in an international cabinet auxiliary module

At your current location

1

DANGER
Risk of electrocution
Some of the terminals inside the frame supervisory panel (FSP) have an electrical potential of -48 V dc. Remove all jewelry before replacing a card in the FSP. Do not touch any terminal in the FSP.

CAUTION
Loss of service
This procedure includes directions to remove an IMTM, or an IPTM from service, which can cause service degradation. Perform this procedure only if necessary to restore out-of-service components. Otherwise, carry out this procedure during periods of low traffic. Do not perform this procedure if essential services are using PM resources.

Obtain a replacement card. Ensure that the replacement card has the same PEC, including suffix, as the card being removed.

At the cabinet

2 Unscrew the slotted nut on the left-hand side of the FSP.

3 Open the FSP.

4 Use the following table and illustration to identify the shelf positions and FSP fuses associated with the power and alarm card you are replacing.

(Sheet 1 of 2)

Power and alarm card slot	FSP fuse number	Shelf position
PWR ALM 1	01	05
	02	33

NT0X36
in an international cabinet auxiliary module (continued)

(Sheet 2 of 2)

Power and alarm card slot	FSP fuse number	Shelf position
PWR ALM 2	04	19
PWR ALM 3	05	47

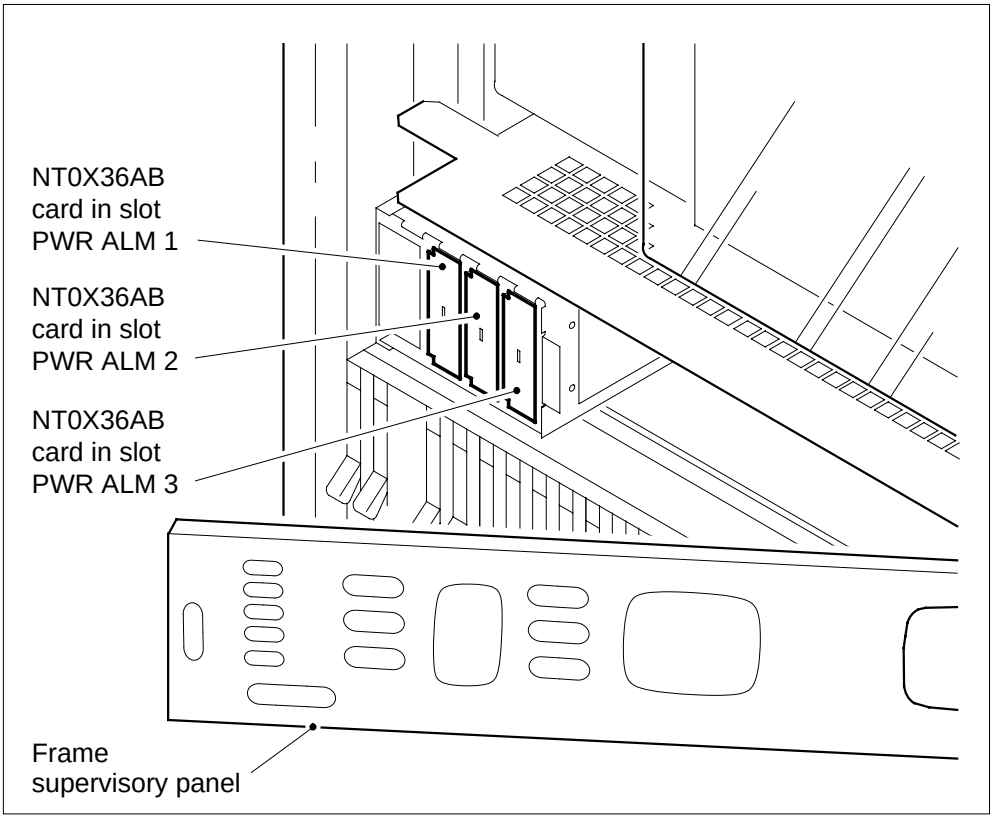

5

CAUTION
Potential loss of service
If the power distribution in the procedure below does not match the configuration in your office, contact the next level of support before proceeding.

Record the fuse numbers and shelf positions associated with the card you are replacing.

NT0X36
in an international cabinet auxiliary module (continued)

6 Select a shelf associated with the FSP card you are replacing.

At the MAP terminal

7 Access the PM level of the MAP display by typing

>MAPCI;MTC;PM

and pressing the Enter key.

Example of a MAP display:

```
            SysB    ManB    OffL    CBsy    ISTb    InSv
PM             1               6                     102
```

8 The next step depends on the type of PM that is provisioned in the shelf.

If the PM is an	Do
OAU	step 9
IMTM, or IPTM	step 13

9 Post the OAU by typing

>POST OAU pm_no

and pressing the Enter key.

where

pm_no
is the number of the PM (0 to 9999)

Example of a MAP display:

```
            SysB    ManB    OffL    CBsy    ISTb  InSv
PM             1       0       6       0       0   102
OAU            1       0       0       0       0     0


OAU      0     SysB
```

10 Determine the state of the OAU.

Note: The state of the OAU is shown to the right of the PM number. In the example display in step 9, the OAU is system busy (SysB).

If the OAU is	Do
Offl	step 129

NT0X36
in an international cabinet auxiliary module (continued)

If the OAU is	Do
ManB	step 40
anything else	step 11

11 A maintenance flag (Mtce) may appear, indicating that system-initiated maintenance tasks are in progress. Wait until the flag disappears from the status line before proceeding to the next step.

12 Manually busy the PM by typing

>BSY

and pressing the Enter key.

Example of a MAP display:

```
            SysB    ManB    OffL    CBsy    ISTb    InSv
PM            58       1       6      14      12      17
OAU            0       1       0       0       0       0

OAU     0    ManB
bsy
OAU 0 Bsy
OK.
```

Go to step 40.

13 From office records or office personnel, verify that essential services are not using the PM resources that will be affected by this procedure.

Note: When verifying resources used, include all PMs that are associated with the shelf you are working on. For all service and trunk modules, include NT1X80 cards and NT1X81 cards (single-card PMs) provisioned on the shelf; these single-card PMs must be removed from service to complete this procedure. If the shelf is equipped with an STM, also check for essential services on the STM provisioned on the other half of the shelf; both STMs must be removed from service to complete this procedure.

If essential services	Do
are using PM resources and one or more PMs are in service	step 128
are using PM resources and all PMs are out of service	step 14
are not using PM resources	step 14

14 Post the PM by typing

>POST pm_type pm_no

and pressing the Enter key.

where

NT0X36
in an international cabinet auxiliary module (continued)

pm_type
is the type of PM (IMTM, IPTM)

pm_no
is the number of the PM (0 to 9999)

Example of a MAP display:

```
              SysB    ManB    OffL    CBsy    ISTb  InSv
PM               1       0       6       0       0   102
IMTM             1       0       0       0       0     9


IMTM    0    SysB
```

15 Determine the state of the PM.

Note: The PM state is shown to the right of the PM number. In the example display in step 14, the PM state is system busy (SysB).

If the PM is	Do
`Offl`	step 129
anything else	step 16

16 Access the TTP level of the MAP display by typing

`>MAPCI;MTC;TRKS;TTP`

and pressing the Enter key.

Example of a MAP display:

```
POST        DELQ            BUSYQ        DIG
TTP  6-013
CKT TYPE     PM NO.          COM LANG     STA S R  DOT TE  RESULT
```

17 Post the circuits for the PM by typing

`>POST  P  pm_type  pm_no`

and pressing the Enter key.

where

pm_type
is the type of PM (IMTM, IPTM)

pm_no
is the number of the PM (0 to 9999)

Example of a MAP display:

NT0X36
in an international cabinet auxiliary module (continued)

```
POST    17  DELQ            BUSYQ        DIG
TTP  6-013
CKT TYPE     PM NO.          COM LANG     STA S R  DOT TE  RESULT

CONF6   IMTM    0  0   CF6P            0  IDL


post p IMTM 0
LAST CKT = 17
SHORT CLLI IS: CF6P
OK,CKT POSTED
```

18 Determine if the state of any of the circuits is installation busy (INB), indicated by `INB` to the right of the trunk name on the MAP display.

Note: The state of each circuit can be determined by repeating the command NEXT until the state of each circuit has been determined.

If	Do
one or more circuits is in the `INB` state	step 19
no circuits are in the `INB` state	step 24

19 Record the name and number of each of the circuits in the `INB` state.

20 Manually busy all posted circuits by typing

`>BSY  ALL`

and pressing the Enter key.

Example of a MAP display:

```
POST    18  DELQ            BUSYQ  A  6  DIG
TTP  6-027
CKT TYPE     PM NO.          COM LANG     STA S R  DOT TE  RESULT


BSYQ ALL IDLE

bsy all
OK,POST SET IS SET IN BSYQ
```

21 Wait until all circuits have been manually busied (removed from the busy queue) before proceeding to the next step.

Note: The digit to the right of the BUSYQ header indicates the number of circuits still in use. As a circuit becomes available, it is manually busied and the number in the queue is decremented by one. When the field is blank, this indicates that all circuits have been manually busied.

NT0X36
in an international cabinet auxiliary module (continued)

22 The next action depends on whether the affected shelf is provisioned with either the NT1X80 enhanced digital recorded announcement machine (EDRAM) card or the NT1X81 conference card.

If the shelf is	Do
provisioned with either the NT1X80 or the NT1X81	step 23
not provisioned with either the NT1X80 or the NT1X81	step 27

23 Post the circuits for the single-card PM by typing

`>POST P pm_type pm_no`

and pressing the Enter key.

where

pm_type
is the type of single-card PM (CTM, DTM)

pm_no
is the number of the PM (0 to 9999)

Note: The NT1X80 EDRAM card is referred to as a DTM on the MAP display, and the NT1X81 conference card is referred to as a CTM. Both cards are known as single-card PMs.

24 Manually busy all posted circuits by typing

`>BSY ALL`

and pressing the Enter key.

25 Wait until all circuits have been manually busied (removed from the busy queue) before proceeding to the next step.

26 Repeat steps 23 to 25 for all NT1X80 and NT1X81 cards provisioned on the shelf.

27 Access the PM level of the MAP display by typing

`>PM`

and pressing the Enter key.

28 Post the PM by typing

`>POST pm_type pm_no`

and pressing the Enter key.

where

pm_type
is the type of PM (IMTM, IPTM)

pm_no
is the number of the PM (0 to 9999)

NT0X36
in an international cabinet auxiliary module (continued)

29 Determine the state of the PM.

If the PM is	Do
ManB	step 31
anything else	step 30

30 Manually busy the PM by typing

>BSY

and pressing the Enter key.

Example of a MAP display:

```
            SysB    ManB    OffL    CBsy    ISTb    InSv
PM            58       1       6      14      12      17
IMTM           0       1       0       0       0       9

IMTM    0    ManB
bsy
IMTM 0 Bsy
OK.
```

31 The next action depends on whether the shelf is provisioned with either the NT1X80 enhanced digital recorded announcement machine (EDRAM) card or the NT1X81 conference card.

If the shelf is	Do
provisioned with either the NT1X80 or the NT1X81	step 32
not provisioned with either the NT1X80 or the NT1X81	step 36

32 Post the single-card PM by typing

>POST pm_type pm_no

and pressing the Enter key.

where

pm_type
is the type of single-card PM (CTM, DTM)

pm_no
is the number of the PM (0 to 9999)

33 Determine the state of the single-card PM.

If the PM is	Do
ManB	step 35

NT0X36
in an international cabinet auxiliary module (continued)

If the PM is	Do
anything else	step 34

34 Manually busy the single-card PM by typing

>BSY

and pressing the Enter key.

35 Repeat steps 32 to 34 for all NT1X80 and NT1X81 cards provisioned on the shelf.

36 The next action depends on whether the shelf is provisioned as an IPTM.

If the shelf is provisioned as	Do
an IPTM, and you have manually busied only one IPTM	step 37
an IPTM, and you have manually busied both IPTMs	step 38

37

CAUTION
Loss of service
Powering down an IPTM will trip the mate power converter in the other IPTM provisioned on the shelf. Therefore, it is best to manually busy and power down both IPTMs on a shelf.

Repeat steps 14 to 36 for the IPTM in the other half of the shelf.

38 The next action depends on how many shelves equipped with PMs are associated with the FSP card you are replacing.

If	Do
one shelf equipped with PMs is associated with the card	step 40
two shelves equipped with PMs are associated with the card, and you have turned down functionality for only one shelf	step 39
two shelves equipped with PMs are associated with the card, and you have turned down functionality for both shelves	step 40

NT0X36
in an international cabinet auxiliary module (continued)

39 Repeat steps 6 to 38 for PMs in the other shelf associated with the FSP card you are replacing, then go to step 40.

At the shelf

40

> **DANGER**
> **Static electricity damage**
> Wear a wrist strap connected to the wrist-strap grounding point of a frame supervisory panel (FSP) or a modular supervisory panel (MSP) while handling circuit cards. This protects the cards against damage caused by static electricity.

Select a shelf to power down.

41 Pull and set the handle of the POWER switch on the power converter downward to the OFF position.

42 The next action depends on the type of PM that is provisioned in the shelf.

If the shelf is provisioned as	Do
an IPTM	step 43
an IMTM	step 44

43 For the mate power converter in the IPTM on the other half of the shelf, pull and set the handle of the POWER switch downward to the OFF position.

Go to step 45.

44 For the other power converter on the shelf, pull and set the handle of the POWER switch downward to the OFF position.

45 The next action depends on how many shelves equipped with PMs are associated with the FSP card you are replacing.

If	Do
one shelf equipped with PMs is associated with the card	step 47
two shelves equipped with PMs are associated with the card, and you have powered down only one shelf	step 46
two shelves equipped with PMs are associated with the card, and you have powered down both shelves	step 47

46 Repeat steps 41 to 45 for PMs in the other shelf associated with the FSP card you are replacing, then go to step 47.

NT0X36
in an international cabinet auxiliary module (continued)

At the FSP

47 Remove the alarm and control card.

48 Insert the replacement alarm and control card.

49 Close the FSP.

50 Tighten the slotted nut on the FSP.

51 Select a shelf to power up.

At the shelf

52 Power up the converter.

- **a** Pull and set the handle of the POWER switch upward to the ON position.
- **b** Press and hold the RESET button on the power converter until the CONVERTER FAIL LED goes off.
- **c** Release the RESET button.

53 The next action depends on the type of PM that is provisioned in the shelf, and whether you have powered up both power converters.

If the shelf	Do
is provisioned as an IPTM or an IMTM and you have already powered up both power converters	step 58
is provisioned as an IPTM	step 54
is provisioned as an IMTM	step 55

54 For the mate power converter in the IPTM on the other half of the shelf, repeat steps 52 and 53, then go to step 56.

55 For the other power converter on the shelf, repeat steps 52 and 53, then go to step 56.

56 The next action depends on how many shelves are associated with the FSP card you are replacing.

If	Do
one shelf equipped with PMs is associated with the card	step 58
two shelves equipped with PMs are associated with the card, and you have powered up only one shelf	step 57
two shelves equipped with PMs are associated with the card, and you have powered up both shelves	step 58

57 Repeat steps 52 to 56 for PMs in the other shelf associated with the FSP card you are replacing, then go to step 58.

NT0X36
in an international cabinet auxiliary module (continued)

At the MAP terminal

58 Access the PM level of the MAP display by typing

>PM

and pressing the Enter key.

59 The next step depends on the type of PM that is provisioned in the shelf.

If the PM is	Do
an OAU	step 60
an IPTM, or IMTM	step 64

60 Post the OAU by typing

>POST OAU pm_no

and pressing the Enter key.

where

pm_no
is the number of the PM (0 to 9999)

61 Load the OAU by typing

>LOADPM

and pressing the Enter key.

Example of a MAP response:

```
OAU 0 LoadPM  Passed
```

If the LOADPM command	Do
passed	step 63
failed	step 62

62 Load the PM using the procedure *Loading a PM* in this document. When you have completed the procedure, return to this point.

63 Return the PM to service by typing

>RTS

and pressing the Enter key.

Example of a MAP response:

OAU 0 Rts Passed

If the RTS command	Do
passed	step 124

NT0X36
in an international cabinet auxiliary module (continued)

If the RTS command	Do
failed	step 130

64 Post the PM by typing

>POST pm_type pm_no

and pressing the Enter key.

where

pm_type
is the type of PM (IMTM, IPTM)

pm_no
is the number of the PM (0 to 9999)

65 Load the PM by typing

>LOADPM

and pressing the Enter key.

Example of a MAP response:

```
MTM 0 LoadPM  Passed
```

If the LOADPM command	Do
passed	step 67
failed	step 66

66 Load the PM using the procedure *Loading a PM* in this document. When you have completed the procedure, return to this point.

67 Return the PM to service by typing

>RTS

and pressing the Enter key.

Example of a MAP response:

```
MTM 0 Rts Passed
```

If the RTS command	Do
passed, and the PM is `InSv`	step 76
passed, and the PM is `ISTb` with a card list generated	step 68
failed	step 130

NT0X36
in an international cabinet auxiliary module (continued)

68 Record the messages on the MAP display for future reference.

69 The next action depends on whether the affected shelf is provisioned with either the NT1X80 (EDRAM) card or the NT1X81 conference card.

If the shelf is	Do
provisioned with either the NT1X80 or the NT1X81	step 70
not provisioned with either the NT1X80 or the NT1X81	step 76

70 Post the single-card PM by typing

>POST pm_type pm_no

and pressing the Enter key.

where

pm_type
is the type of PM (CTM or DTM)

pm_no
is the number of the PM (0 to 9999)

71 Load the single-card PM by typing

>LOADPM

and pressing the Enter key.

Example of a MAP response:

```
DTM 0 LoadPM  Passed
```

If the LOADPM command	Do
passed	step 73
failed	step 72

72 Load the single-card PM using the procedure *Loading a PM* in this document. When you have completed the procedure, return to this point.

73 Return the PM to service by typing

>RTS

and pressing the Enter key.

Example of a MAP response:

NT0X36
in an international cabinet auxiliary module (continued)

MTM 0 Rts Passed

If the RTS command	Do
passed, and the PM is `InSv`	step 75
passed, and the PM is `ISTb` with a card list generated	step 74
failed	step 130

74 Record the messages on the MAP display for future reference.

75 Repeat steps 70 to 74 for the other NT1X80 and NT1X81 cards provisioned on the shelf, then go to step 76.

76 Access the TTP level of the MAP display by typing

```
>TRKS;TTP
```

and pressing the Enter key.

77 The next action depends on whether the shelf associated with the FSP card you replaced is provisioned with metallic test units (MTU) or digital test units (DTU).

Note: DTU and MTU are usually provisioned in pairs.

If the shelf is	Do
equipped with MTU	step 78
equipped with DTU	step 93
not equipped with MTU or DTU	step 108

78 Post the first circuit in the MTU by typing

```
>POST  G  MTU  circuit_no
```

and pressing the Enter key.

where

circuit_no
is the number of the first MTU circuit

79 Busy the circuit by typing

```
>BSY
```

and pressing the Enter key.

80 Seize the circuit by typing

```
>SEIZE
```

and pressing the Enter key.

NT0X36
in an international cabinet auxiliary module (continued)

81 Put the circuit on hold by typing

>HOLD

and pressing the Enter key.

82 Post the second circuit in the MTU by typing

>NEXT

and pressing the Enter key.

83 Busy the circuit by typing

>BSY

and pressing the Enter key.

84 Seize the circuit by typing

>SEIZE

and pressing the Enter key.

85 Put the circuit on hold by typing

>HOLD

and pressing the Enter key.

86 Access the disk utility by typing

>DISKUT

and pressing the Enter key.

87 List the files in the volume containing the MTU load by typing

>LISTFL vol_name

and pressing the Enter key.

where

vol_name
is the name of the volume containing the MTU load

88 Record the name of the MTU load file.

89 Quit the disk utility by typing

>QUIT

and pressing the Enter key.

90 Load the MTU by typing

>LOADFW CC load_name

and pressing the Enter key.

where

NT0X36
in an international cabinet auxiliary module (continued)

load_name
is the load file name recorded in step 88

If the LOADFW command	Do
passed	step 91
failed	step 130

91 Release the first MTU circuit by typing

>RLS MTU circuit_no

and pressing the Enter key.

where

circuit_no
is the number of the first MTU circuit you busied, seized, and put on hold

92 Release the second MTU circuit to by typing

>RLS MTU circuit_no

and pressing the Enter key.

where

circuit_no
is the number of the second MTU circuit you busied, seized, and put on hold

Go to step 108.

93 Post the first circuit in the DTU by typing

>POST G DTU circuit_no

and pressing the Enter key.

where

circuit_no
is the number of the first DTU circuit

94 Busy the circuit by typing

>BSY

and pressing the Enter key.

95 Seize the circuit by typing

>SEIZE

and pressing the Enter key.

96 Put the circuit on hold by typing

>HOLD

and pressing the Enter key.

NT0X36
in an international cabinet auxiliary module (continued)

97 Post the second circuit in the DTU by typing

>NEXT

and pressing the Enter key.

98 Busy the circuit by typing

>BSY

and pressing the Enter key.

99 Seize the circuit by typing

>SEIZE

and pressing the Enter key.

100 Put the circuit on hold by typing

>HOLD

and pressing the Enter key.

101 Access the disk utility by typing

>DISKUT

and pressing the Enter key.

102 List the files in the volume containing the DTU load by typing

>LISTFL vol_name

and pressing the Enter key.

where

vol_name
is the name of the volume containing the MTU load

103 Record the name of the DTU load file.

104 Quit the disk utility by typing

>QUIT

and pressing the Enter key.

105 Load the DTU by typing

>LOADFW CC load_name

and pressing the Enter key.

where

load_name
is the load file name recorded in step 103

If the LOADFW command	Do
passed	step 106
failed	step 130

NT0X36
in an international cabinet auxiliary module (continued)

106 Release the first DTU circuit by typing

>RLS RLS

107 Release the second DTU circuit to by typing

>RLS RLS

108 Post the circuits for the PM by typing

>POST TM pm_type pm_no

and pressing the Enter key.

where

pm_type
is the type of PM (IMTM, IPTM)

pm_no
is the number of the PM (0 to 9999)

109 Return all the circuits to service by typing

>RTS ALL

and pressing the Enter key.

Example of a MAP response:

```
RTS OK
```

110 The next action depends on whether INB circuits were recorded in step 19.

If	Do
INB circuits were recorded	step 111
no INB circuits wre recorded	step 114

111 Post the first circuit on the list by typing

>POST T circuit_name circuit_no

and pressing the Enter key.

where

circuit_name
is the circuit name recorded in step 19

circuit_no
is the circuit number recorded in step 19

112 Return the circuit to the INB state by typing

>BSY INB

and pressing the Enter key.

113 Repeat steps 111 and 112 for each of the other circuits on the list recorded in step 19.

NT0X36
in an international cabinet auxiliary module (continued)

114 The next action depends on the results of the PM return to service in step 67.

If the RTS command	Do
passed unconditionally	step 121
passed, but in-service tests failed and a card list was generated	step 115

115 Manually busy all posted circuits by typing

>BSY ALL

and pressing the Enter key.

116 Return all circuits to service by typing

>RTS ALL

and pressing the Enter key.

117 Access the PM level of the MAP display by typing

>PM

and pressing the Enter key.

118 Post the PM by typing

>POST pm_type pm_no

and pressing the Enter key.

where

pm_type
is the type of PM (CTM, DTM, IMTM, IPTM)

pm_no
is the number of the PM (0 to 9999)

119 Perform an in-service test on the PM by typing

>TST

and pressing the Enter key.

Example of a MAP response:

NT0X36
in an international cabinet auxiliary module (continued)

```
MTM     0    ISTb           TSTFAIL

InSvce Tests Initiated
IMTM 0 Tst Failed
 Site Flr RPos  Bay_id   Shf  Description    Slot     EqPEC
 HOST  00  D06  TME  00   04  MTM : 000      04       2X59
 HOST  00  D06  TME  00   04  MTM : 000      02       0X70
Following ISTb Exist :
Test Failed
```

If the TST command	Do
passed, and there are single-card PMs or an IPTM still out of service	step 121
passed, and you have worked on all PMs provisioned on the shelf and all PMs have been returned to service	step 124
passed, and you have worked on all PMs provisioned on the shelf but one or more PMs have not been successfully returned to service	step 130
failed, and there are single-card PMs or an IPTM that you have not worked on to return to service	step 120
failed, and you have worked on all PMs provisioned on the shelf	step 130

120 Record the messages on the MAP display for future reference.

121 Access the PM level of the MAP display by typing

`>PM`

and pressing the Enter key.

122 Post the PM by typing

`>POST pm_type pm_no`

and pressing the Enter key.

where

pm_type
is the type of PM (IMTM, IPTM)

pm_no
is the number of the PM (0 to 9999)

123 Repeat steps 64 to 119 for other PMs provisioned on this shelf, then go to step 124.

NT0X36
in an international cabinet auxiliary module (end)

124 The next action depends on how many shelves are associated with the FSP card you are replacing.

If	Do
one shelf equipped with PMs is associated with the card	step 126
two shelves equipped with PMs are associated with the card, and you have returned to service the PM on only one shelf	step 125
two shelves equipped with PMs are associated with the card, and you have returned to service the PM on both shelves	step 126

125 Repeat steps 59 to 124 for PMs in the other shelf associated with the FSP card you are replacing, then go to step 126.

126 The next action depends on your reason for performing this procedure.

If you were	Do
directed to this procedure from a maintenance procedure	step 127
not directed to this procedure from a maintenance procedure	step 131

127 Return to the maintenance procedure that sent you to this procedure and continue as directed.

128 Consult the personnel responsible for the next level of support to determine how essential services can be handled. Continue as directed by office personnel.

129 Consult office personnel to determine why the component is off line. Continue as directed by office personnel.

130 For further assistance, contact the personnel responsible for the next level of support.

131 You have completed this procedure.

NT0X91 in a CPCE frame

Application

Use this procedure to replace the NT0X91 in the common-peripheral controller equipment (CPCE) frame, as listed in the following table.

If you cannot identify the product engineering code (PEC), suffix, or provisioned shelf or frame for the card to replace, refer to the Index. The Index provides a list of the cards, shelves, and frames documented in this card replacement book.

PEC	Suffix	Card name	Shelf or frame name
NT0X91	AA	FSP drive and alarm circuit pack	CPCE equipped with digital trunk controller (DTC), international DTC (IDTC), international line group controller (ILGC), international line trunk controller (ILTC), ISDN DTC (DTCI), ISDN line group controller (LGCI), ISDN line trunk controller (LTCI), line group controller (LGC), line trunk controller (LTC), PCM30 DTC (PDTC), PCM30 LGC (PLGC), PCM30 LTC (PLTC), SMS
NT0X91	AE	FSP drive and protection circuit pack	CPCE equipped with DTC, DTCI IDTC, ILGC, ILTC, LGC, LGCI , LTC, LTCI, PDTC, PLGC, PLTC, SMS

Common procedures

This procedure refers to the following common procedures:

- *Loading a PM*
- *Manually busying Series II PM and CPM C-side links*

NT0X91
in a CPCE frame (continued)

- *Reseating cards in equipment shelves*
- *Unseating cards in equipment shelves*

Do not go to the common procedure unless the step-action procedure directs you to go.

Action

This procedure contains a summary flowchart and a list of steps. Use the flowchart to review the procedure. Follow the steps to perform the procedure.

NT0X91 in a CPCE frame (continued)

Summary of replacing a NT0X91 in a CPCE frame

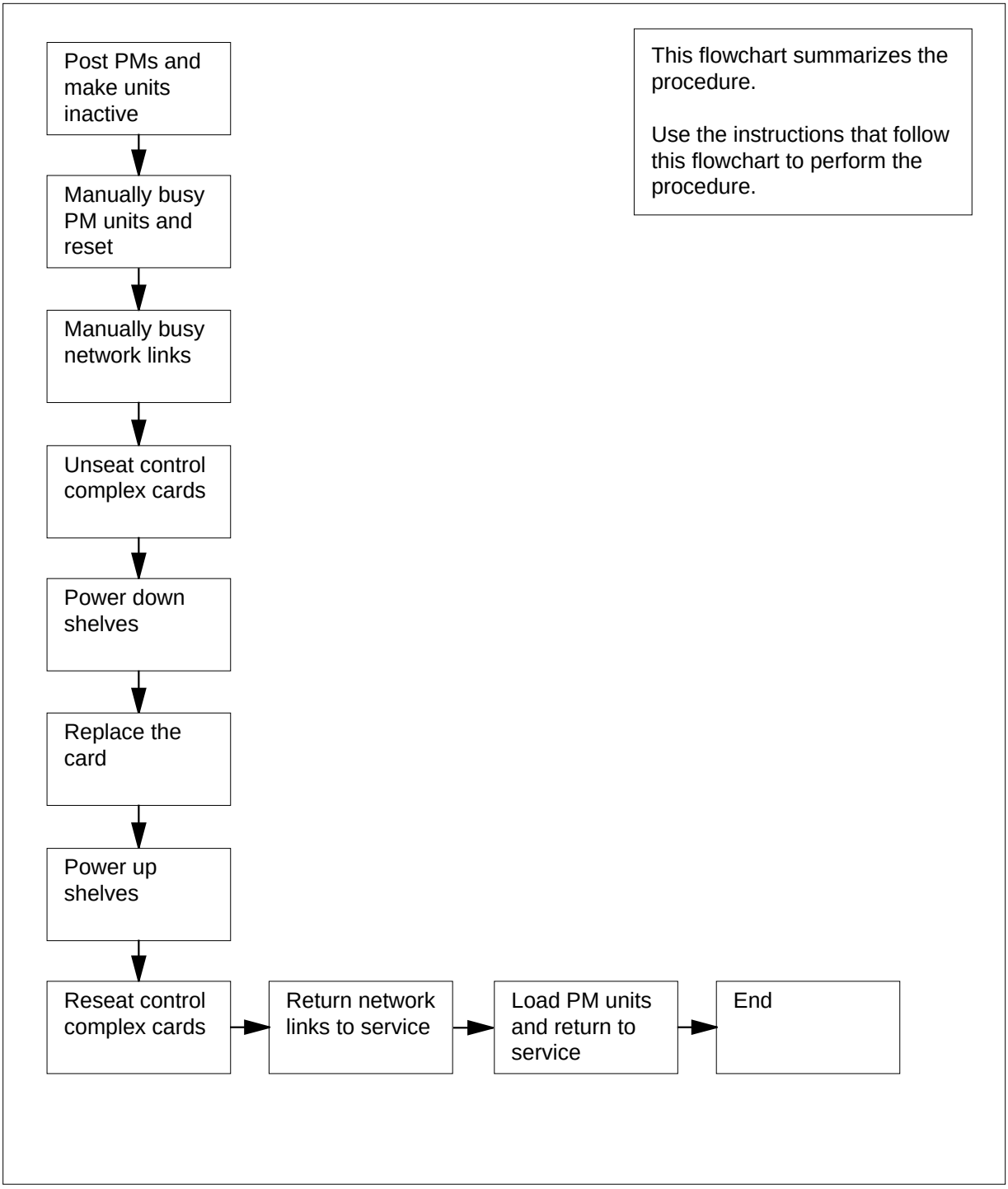

NT0X91
in a CPCE frame (continued)

Replacing a NT0X91 in a CPCE frame

At your current location

1

DANGER
Risk of electrocution
Some of the terminals inside the frame supervisory panel (FSP) have an electrical potential of -48 V dc. Remove all jewelry before you replace a card in the FSP. Do not touch any terminal inside the FSP.

WARNING
Loss of service
This procedure manually busies one or more peripheral module (PM) units, which can cause service degradation. Perform this procedure only if you need to restore out-of-service components. If this procedure is not needed for a return to service, perform this procedure only during periods of low traffic.

Obtain a replacement card. Make sure that the replacement card has the same PEC, including suffix, as the card being removed.

At the frame

2 Record the frame supervisory panel (FSP) slot, frame circuit breakers (CB), shelves, PM location and units, and power converter slots associated with the NT0X91 card you are replacing. Use the following table to obtain this information.

Card	FSP Slot	CB	Shelf and PM information	PC slot
NT0X91AA	CD1	CB5	shelf 18 (lower PM, unit 0)	25
NT0X91AA	CD1	CB4	shelf 51 (upper PM, unit 0)	25
NT0X91AE	CD2	CB2	shelf 32 (lower PM, unit 1)	25
NT0X91AE	CD2	CB1	shelf 65 (upper PM, unit 1)	25

NT0X91
in a CPCE frame (continued)

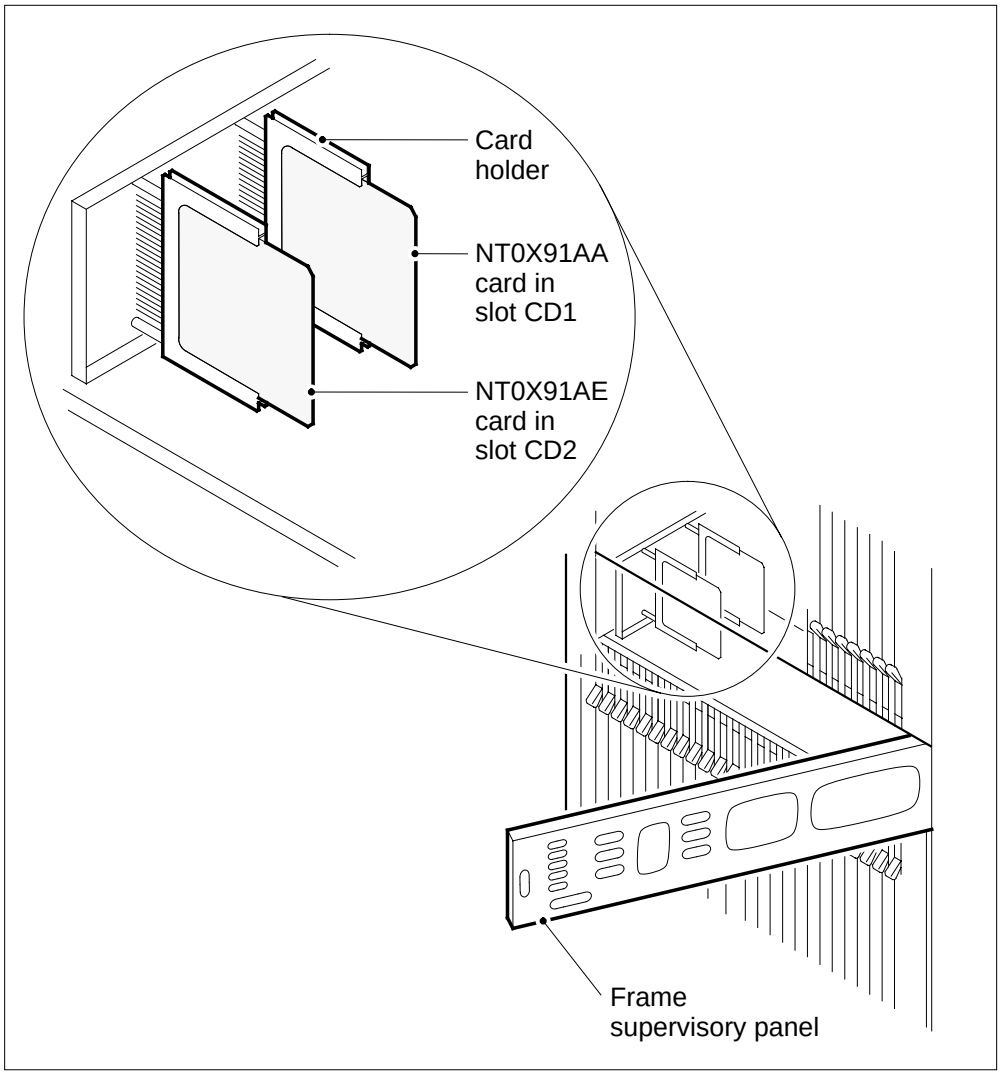

3 Record the type of PMs associated with the NT0X91 that you will replace.

At the MAP terminal

4 To access the PM level of the MAP display, type

`>MAPCI;MTC;PM`

and press the Enter key.

Example of a MAP display:

```
                    SysB    ManB    OffL    CBsy    ISTb    InSv
PM                     0       0       0       0       3      39
```

NT0X91
in a CPCE frame (continued)

5 To post one of the PMs associated with the NT0X91 you replace, type

>POST pm_type pm_no

and press the Enter key.

where

pm_type
is the PM type recorded in step 3

pm_no
is the PM number recorded in step 2

Example of a MAP display:

```
                    SysB    ManB    OffL    CBsy    ISTb    InSv
 PM                    0       0       0       0       3      39
 DTC                   0       0       0       0       0       4

DTC     0 InSv  Links_OOS: CSide  0 , PSide  0
Unit0:   Act   InSv
Unit1:   Inact InSv
```

6 Determine the state of the PM unit associated with the card you replace.

If the state of the PM unit	Do
is ISTb, InSv, SysB, or CBsy, and active	step 7
is ISTb, InSv, SysB, or CBsy, and inactive	step 10
is ManB	step 12
is OffL	step 51

7 Determine the state of the mate PM unit.

If the state of the mate PM unit	Do
is ISTb or InSv	step 8
is other than listed here	step 52

8 To switch activity, type

>SWACT

and press the Enter key.

Example of a MAP response:

NT0X91
in a CPCE frame (continued)

```
DTC 0     A Warm SwAct will be performed after
          data sync of active terminals.
Please confirm ("YES", "Y", "NO", or "N"):
```

If	Do
you must confirm the command	step 9
the system rejects the SWACT	step 52

9 To confirm the command, type

>YES

and press the Enter key.

Example of a MAP response:

```
Unit0:   Inact SysB  Mtce
Unit1:   Act   ISTb

DTC 0     SwAct Passed
```

If the MAP response	Do
is `SWACT passed`	step 10
is other than listed here	step 52

10 A maintenance flag (Mtce) can appear. This flag indicates that system-initiated maintenance tasks are in progress. Wait until the flag disappears from the status lines for both PM units before you proceed to the next step.

11 To manually busy the unit, type

>BSY UNIT unit_no

and press the Enter key.

where

unit_no
is the PM unit number (0 or 1) recorded in step 2

If the BSY command	Do
passed	step 12
failed	step 53

12 To reset the inactive PM unit, type

>PMRESET UNIT unit_no NORUN

and press the Enter key.

NT0X91
in a CPCE frame (continued)

where

unit_no
is the PM unit number (0 or 1)

Example of a MAP response:

```
DTC 0 Unit 0    PMReset Passed
```

13 To manually busy all C-side links associated with the PM unit in use, use the procedure *Manually busying Series II PM and CPMC-side links* in this document. Complete the procedure and return to this point.

14 Repeat steps 5 to 13 for the other PM unit associated with the NT0X91 you are replacing.

At the shelf

15

WARNING
Static electricity damage
Wear a wrist strap that connects to the wrist-strap grounding point of a frame supervisory panel (FSP) or a modular supervisory panel (MSP) to handle circuit cards. The wrist strap protects the cards against static electricity damage.

If there are NT6X48 DS30A interface cards in slots 6 and 7, unseat them.

If you	Do
are working on any XPM with the NTMX77 unified processor (XPM plus)	step 18
are working on any 2-processor XPM (NT6X45-based)	step 16
are working on an international 3-processor XPM (NT6X45-based)	step 17

16 Unseat control complex cards (2-processor XPMs). For each sub-step below, use the procedure *Unseating cards in equipment shelves* in this document.

a According to the configuration of your unit, unseat either the NT6X43 message interface card or the NT6X69 message protocol card in slot 18.

b Unseat the NT6X45 signaling processor card in slot 12.

c Unseat the NT6X45 master processor card in slot 8.

NT0X91
in a CPCE frame (continued)

d Go to step 18.

17 Unseat control complex cards (international 3-processor XPMs). For each sub-step below, use the procedure *Unseating cards in equipment shelves* in this document.

a According to the configuration of your unit, unseat either the NT6X43 message interface card or the NT6X69 message protocol card in slot 10.

b Unseat the NT6X45 signaling processor card in slot 12.

c Unseat the NT6X45 PCM30 signaling processor card in slot 18.

d Unseat the NT6X45 master processor card in slot 14.

18 Pull and set the power converter POWER switch handle downward to the OFF position.

19 Repeat steps 15 to 18 for the second PM unit associated with NT0X91 you are replacing.

20 Verify that the CBs for the power converters associated with the NT0X91 you are replacing are in the OFF position.

21 Unscrew the slotted nut on the left-hand side of the FSP.

22 Open the FSP.

23

> **WARNING**
> **Loss of service**
> Make sure that the alarm and control card you remove controls the PM units that you manual busied. Removal of the wrong card causes a loss of service.

Remove the NT0X91 card from the CD slot in the FSP.

24 Place the removed card in an electrostatic discharge (ESD) protective container.

25 Make sure that the replacement card has the same PEC, including suffix, as the removed card.

26 Insert the replacement card.

27 Close the FSP.

28 Tighten the slotted nut on the FSP.

29 The next action depends on the power converter version and the type of supervisory panel.

If the power converter	Do
is an NT2X70AE card and the FSP or MSP has circuit breakers	step 30

NT0X91
in a CPCE frame (continued)

If the power converter	Do
is an NT2X70AE card and the FSP or MSP does not have circuit breakers	step 31
is not an NT2X70AE card and the FSP or MSP has circuit breakers	step 32
is not an NT2X70AE card and the FSP or MSP does not have circuit breakers	step 33

30 Power up the converter.

a Pull and set the POWER switch handle up to the RESET position and hold.

b Set the handle of the converter circuit breaker on the FSP or MSP up until it clicks into place.

c Release the POWER switch handle.

Go to step 34.

31 Power up the converter.

a Pull and set the POWER switch handle up to the RESET position and hold until the CONVERTER FAIL LED goes off.

b Release the handle.

Go to step 34.

32 Power up the converter.

a Pull and set the POWER switch handle up to the ON position.

b Press and hold the RESET button on the power converter.

c Set the handle of the converter circuit breaker on the FSP or MSP up until it clicks into place.

d Release the RESET button.

Go to step 34.

33 Power up the converter.

a Pull and set the POWER switch handle up to the ON position.

b Press and hold the RESET button on the power converter until the CONVERTER FAIL LED goes off.

c Release the RESET button.

NT0X91
in a CPCE frame (continued)

34 The next action depends on the processor configuration of the PM you are working on.

If you	Do
are working on any XPM with the NTMX77 unified processor (XPM plus)	step 37
are working on any 2-processor XPM (NT6X45-based)	step 35
are working on an international 3-processor XPM (NT6X45-based)	step 36

35 Reseat control complex cards (2-processor XPMs). For each sub-step below, use the procedure *Reseating cards in equipment shelves* in this document.

a Reseat the NT6X45 master processor card in slot 8.

b Reseat the NT6X45 signaling processor card in slot 12.

c According to the configuration of your unit, reseat either the NT6X43 message interface card or the NT6X69 message protocol card in slot 18.

Go to step 37.

36 Reseat control complex cards (3-processor international XPMs). For each sub-step below, use the procedure *Reseating cards in equipment shelves* in this document.

a Reseat the NT6X45 master processor card in slot 14.

b Reseat the NT6X45 PCM30 signaling processor card in slot 18.

c Reseat the NT6X45 signaling processor card in slot 12.

d According to the configuration, reseat either the NT6X43 message interface card or the NT6X69 message protocol card in slot 10.

37 If there are NT6X48 DS30A interface cards in slots 6 and 7, reseat them.

38 Repeat steps 29 to 37 for the other PM unit associated with the replaced NT0X91. Power up the power converter and reseat the control complex cards for both shelves and continue this procedure.

At the MAP terminal

39 The next action depends on the type of network in the office.

If you	Do
are working on JNET	step 40
are working on ENET	step 42

NT0X91
in a CPCE frame (continued)

40 To return to service one of the network links associated with the PM unit in use, type

>RTS plane_no link_no

and press the Enter key.

where

plane_no
is the number of the plane (0 or 1) for the link

link_no
is the link number (0 to 63)

If the link	Do
returned to service and more manual-busy links are present	step 41
returned to service and no more manual-busy links are present	step 43
did not return to service	step 53

41 Repeat step 40 for all C-side links to the shelf in use.

42 To return the network link to service, type

>RTS plane_no LINK link_no

and press the Enter key.

where

plane_no
is the number of the plane (0 or 1) for the link

link_no
is the link number (0 to 3)

Example of a MAP response:

```
Request to RTS ENET Plane:0 Shelf:00 Slot:32 Link:01 submitted.
Request to RTS ENET Plane:0 Shelf:00 Slot:32 Link:01 passed.
```

If the link	Do
returned to service	step 43
did not return to service	step 53

43 Repeat steps 39 to 42 for the other PM unit associated with the NT0X91 you are replacing. Return all network links to service for both PM units and continue this procedure.

44 To post one of the PMs in use, type

>PM;POST pm_type pm_no

NT0X91
in a CPCE frame (continued)

and press the Enter key.

where

pm_type
is the PM type (for example DTC, ILGC, LTCI, PDTC, etc.)

pm_no
is the PM number (0 to 255)

45 To load the inactive unit, type

```
>LOADPM  UNIT  unit_no
```

and press the Enter key.

where

unit_no
is the PM unit number (0 or 1)

If the LOADPM command	Do
passed	step 47
failed	step 46

46 To load the PM unit, use the procedure *Loading a PM* in this document. Complete the procedure and return to this point.

47 To return the inactive unit to service, type

```
>RTS  UNIT  unit_no
```

and press the Enter key.

where

unit_no
is the PM unit number (0 or 1)

If the RTS command	Do
passed	step 48
failed	step 53

48 Repeat steps 44 to 47 for the PM unit in the other shelf associated with the NT0X91 you are replacing. Return both PM units to service. Go to step 49.

49 The next action depends on your reason for performing this procedure.

If	Do
a maintenance procedure directed you to this procedure	step 50
a maintenance procedure did not direct you to this procedure	step 54

NT0X91
in a CPCE frame (end)

50 Return to the maintenance procedure that sent you to this procedure and continue as directed.

51 Consult office personnel to determine why the component is offline. Continue as directed by office personnel.

52 For additional help with switch of activity, contact the next level of support.

> ***Note:*** If the system recommends using the SWACT command with the FORCE option, consult office personnel. Consult office personnel to determine if you have permission to use the FORCE option.

53 For additional help, contact the next level of support.

54 The procedure is complete.

NT0X91
in a digital carrier equipment frame

Application

Use this procedure to replace a NT0X91 in a digital carrier equipment (DCE) frame.

PEC	Suffix	Card name	Shelf or frame name
NT0X91	AA, AB	Drive and alarm card	DCE equipped with digital carrier module (DCM), digital echo supressor (DES)
NT0X91	AD	Drive and protection card	DCE equipped with DCM, DES

Basic>Refer to the “Index", if you cannot identify the following features for the card that you want to replace:

- product engineering code (PEC)
- PEC suffix
- provisioned shelf
- provisioned frame

The “Index" contains a list of the cards, shelves, and frames documented in this card replacement book.

Common procedures

This procedure refers to *Loading a PM*.

Do not go to the common procedure unless the step-action procedure directs you.

Action

This procedure contains a summary flowchart and a list of steps. Use the flowchart to review the procedure. Follow the steps to perform the procedure.

NT0X91
in a digital carrier equipment frame (continued)

Summary of replacing a NT0X91 in a digital carrier equipment frame

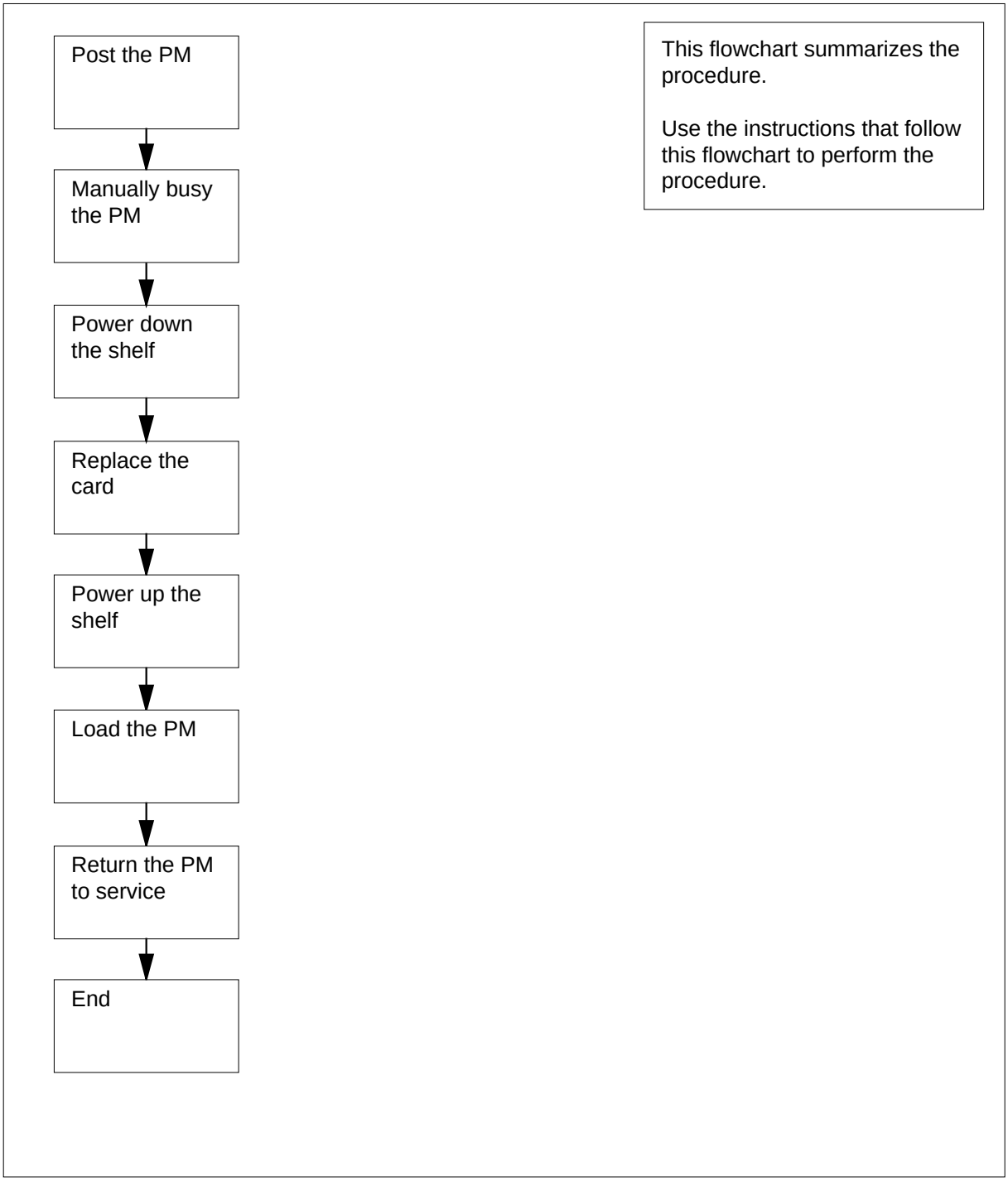

NT0X91
in a digital carrier equipment frame (continued)

Replacing a NT0X91 in a digital carrier equipment frame

At the frame

1

DANGER
Risk of electrocution
Some of the terminals inside the frame supervisory panel (FSP) have an electrical potential of -48 V dc. Make sure that you remove all jewelry before you replace a card in the FSP. Do not touch any terminal in the FSP.

CAUTION
Loss of service
This procedure includes directions to manually busy a DCM or DES. If you manually busy a DCM or DES, a service power failure can occur. Perform this procedure only if you need to restore out-of-service components. If you do not need to restore out-of-service components, perform this procedure during periods of low traffic. .

Obtain a replacement card. Make sure that the replacement card and the card that you replace have the same PEC and PEC suffix.

2 Use the table following the figure to identify the slot that contains the alarm and control card that you replace:

NT0X91
in a digital carrier equipment frame (continued)

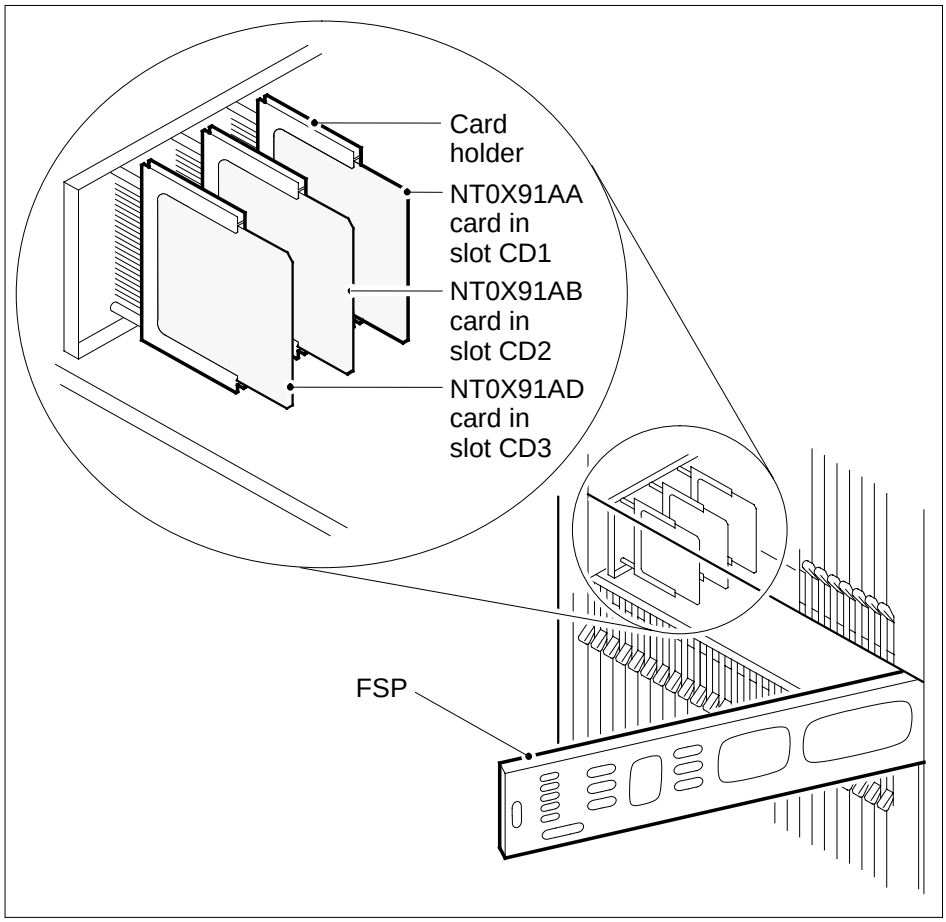

IfAlarm and control card	DoSlot
is NT0X91AA	CD1
is NT0X91AB	CD2
is NT0X91AD	CD3

NT0X91
in a digital carrier equipment frame (continued)

3 Record information on FSP fuses, FSP circuit breakers (CB), and network shelf positions that associate with the card you replace. Use the following table to obtain this information.

FSP card	FSP card position	FSP circuit breakers	Shelf position
NT0X91AA	CD1	CB5	04
NT0X91AB	CD2	CB3	32
		CB1	65
NT0X91AD	CD3	CB4	18
		CB2	51
Note: A minimum of one shelf can be unequipped.			

4 Select a shelf that associates with the FSP card that you replace.

At the MAP terminal

5 To access the PM level of the MAP display, type

`>MAPCI;MTC;PM ndInstance>`

and press the Enter key.

Example of a MAP display:

```
          SysB    ManB    OffL    CBsy    ISTb  InSv
 PM          6       1       0       0      23    24
```

6 To post the PM that associates with the card you replace, type

`>POST pm_type pm_no`

and press the Enter key.

where

pm_type
is the type of PM (DCM, DES)

pm_no
ption>

is the PM number (0 to 511)

Example of a MAP display:

NT0X91
in a digital carrier equipment frame (continued)

```
        SysB    ManB    OffL    CBsy    ISTb  InSv
PM         6       1       0       0      23    24
DCM        1       0       0       0       1     4


DCM     0     InSv
```

7 Determine the state of the PM.

Note: The PM state appears on the right of the PM number. In the example display in step 6, the PM state is in service (InSv).

If the state of the PM unit	Do
is `ISTb`, `InSv`, `SysB`, or `CBsy`	step 8
is ManB	step 12
is OffL	step 41

8 A maintenance flag (Mtce) can appear. A Mtce indicates that system-initiated maintenance tasks are in progress. Wait until the flag disappears from the status line before you proceed to the next step.

9 To manually busy the PM, type

>BSY e>

and press the Enter key.

Example of a MAP response:
OK.DCM 0 Bsy

If the BSY command	Do
passed	step 10
failed	step 43

10 The next action depends on how many shelves equipped with PMs associate with the FSP card that you replace.

If	DoDo
one shelf equipped with PMs associate with the card	step 12
two shelves equipped with PMs associate with the card, and you turned down functionality for only one shelf	step 11

NT0X91
in a digital carrier equipment frame (continued)

If	DoDo
two shelves equipped with PMs associate with the card, and you turned down functionality for both shelves	step 12

11 Repeat steps 6 to10 for PMs in the other shelf that associates with the FSP card you replace. Go to step .12

At the frame

12

> **WARNING**
> **Static electricity damage**
> Wear a wrist strap that connects to the wrist-strap grounding point of a frame supervisory panel (FSP) or a modular supervisory panel (MSP) to handle circuit cards. The wrist strap protects the cards against static electricity damage.

Select a shelf to power down.

13 Pull down and set the handle of the POWER switch on the power converter to the OFF position.

14 The next action depends on the power configuration of the shelf.

If the shelf	Do
contains a single NT2X70	step 16
contains a NT2X06 and a NT2X07	step 15

15 For the mate power converter, pull down and set the handle of the POWER switch to the OFF position.

16 The next action depends on how many shelves equipped with PMs associate with the FSP card that you replace.

If	Do
one shelf equipped with PMs associate with the card	step 18
two shelves equipped with PMs associate with the card, and you powered down only one shelf	step 17
two shelves equipped with PMs associate with the card, and you powered down both shelves	step 18

NT0X91
in a digital carrier equipment frame (continued)

17 Repeat steps 13 to 16 for the PM in the other shelf that associates with the FSP card you replace. Go to step .18

18 Unscrew the slotted nut on the left of the FSP.

19 Open the FSP.

20 Remove the card.

21 Insert the replacement alarm and control card.

22 Close the FSP.

23 Tighten the slotted nut on the FSP.

24 The next action depends on the power converter version and the type of supervisory panel.

If you	Do
replace an NT2X70AE card and the FSP or MSP has circuit breakers	step 25
replace an NT2X70AE card and the FSP or MSP does not have circuit breakers	step 26
do not replace an NT2X70AE card and the FSP or MSP has circuit breakers	step 27
do not replace an NT2X70AE card and the FSP or MSP does not have circuit breakers	step 28

25 Power up the converter, as follows:

a Pull up and set the handle of the POWER switch to the RESET position and hold.

b Set the handle of the converter circuit breaker on the FSP or MSP up until the handle clicks into place.

c Release the handle of the POWER switch.

d Go to step 29

26 Power up the converter, as follows:

a Pull up and set the handle of the POWER switch to the RESET position and hold until the CONVERTER FAIL LED turns off.

b Release the handle of the POWER switch.

c Go to step 29.

27 Power up the converter, as follows:

a Pull up and set the handle of the POWER switch to the ON position.

b Press and hold the RESET button on the power converter.

c Set the handle of the converter circuit breaker on the FSP or MSP up until the handle clicks into place.

NT0X91
in a digital carrier equipment frame (continued)

d Release the RESET button.

e Go to step 29.

28 Power up the converter, as follows:

a Pull up and set the handle of the POWER switch to the ON position.

b Press and hold the RESET button on the power converter until the CONVERTER FAIL LED turns off.

c Release the RESET button.

29 The next action depends on the number of power converters on the shelf.

If	Do
one power converter is on the shelf	step 31
two power converters are on the shelf, and you powered up both of the converters	step 31
two power converters are on the shelf, and you powered up only one of the converters	step 30

30 Repeat steps 24 to 29 for the other power converter on the shelf.

31 The next action depends on how many shelves associate with the FSP card that you replace.

If	Do
one shelf equipped with PMs associates with the card	step 33
two shelves equipped with PMs associate with the card, and you powered up only one shelf	step 32
two shelves equipped with PMs associate with the card, and you powered up both shelves	step 33

32 Repeat steps 24 to 31 for PMs in the other shelf that associates with the FSP card you replace. Go to step 33.

33 At the MAP terminalTo post the PM, type

`>POST pm_type pm_no`

and press the Enter key.

where

pm_type
is the type of PM (DCM, DES)

pm_no
is the PM number (0 to 511)

NT0X91
in a digital carrier equipment frame (continued)

34 To load the PM, type

>LOADPM ance>

and press the Enter key.

If the LOADPM command	Do
failed	step 35
passed	step 36

35 Perform the procedure *Loading a PM* in this document. Complete the procedure and return to this point.

36 To return the PM to service, type

>RTS e>

and press the Enter key.

If the RTS command	Do
passed	step 37
passed, but the PM is `ISTb` as a result of a command protocol violation	step 42
failed	step 43

37 The next action depends on how many shelves associate with the FSP card that you replace.

If	Do
one shelf equipped with PMs associates with the card	step 39
two shelves equipped with PMs associate with the card, and you powered down only one shelf	step 38
two shelves equipped with PMs associate with the card, and you powered down both shelves	step 39

38 Repeat steps 33 to 37 for PMs in the other shelf that associates with the FSP card you replace. Go to step 39.

39 The next action depends on the reason that you perform this procedure.

If a maintenance procedure	Do
directed you to this procedure	step 40

NT0X91
in a digital carrier equipment frame (end)

If a maintenance procedure	Do
did not direct you to this maintenance procedure	step 24

40 Return to the maintenance procedure that directed you to this procedure. Continue as directed by the maintenance procedure.

41 To determine why the component is offline, consult operating company personnel. Continue as directed by operating company personnel.

42 A minor problem is present. The PM can process traffic. For additional help, contact the next level of support.

43 For additional help, contact the next level of support.

44 The procedure is complete.

NT0X91
in a line module equipment frame

Application

Use this procedure to replace a NT0X91 in a line module equipment (LME) frame, as listed in the following table.

PEC	Suffix	Card name	Shelf or frame name
NT0X91	AA	FSP drive and alarm card	FSP (NT0X29) in a LME
NT0X91	AD	FSP drive and protector card	FSP (NT0X29) in a LME

Refer to the “Index", if you cannot identify the following features for the card that you want to replace:

- product engineering code (PEC)
- PEC suffix
- provisioned shelf
- provisioned frame

The “Index" contains a list of the cards, shelves, and frames documented in this card replacement book.

Common procedures

This procedure refers to *Loading a PM*.

Do not go to the common procedure unless the step-action procedure directs you.

Action

This procedure contains a summary flowchart and a list of steps. Use the flowchart to review the procedure. Follow the steps to perform the procedure.

NT0X91
in a line module equipment frame (continued)

Summary of replacing a NT0X91 in a line module equipment frame

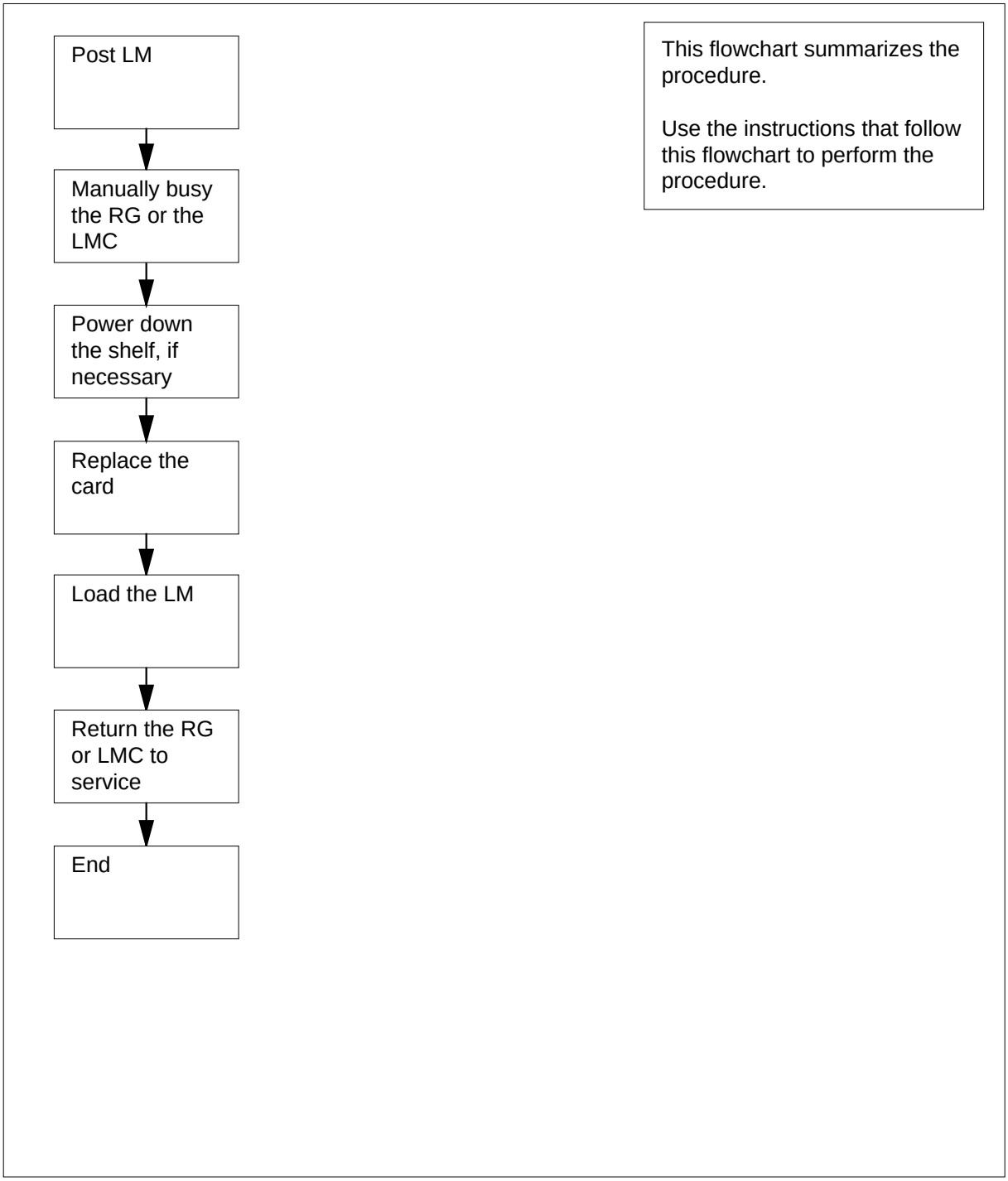

NT0X91
in a line module equipment frame (continued)

Replacing a NT0X91 in a line module equipment frame

At your current location

1

CAUTION
Potential loss of service
This procedure includes directions to manually busy a line module controller (LMC). If you manually busy an LMC, service degradation can occur. Perform this procedure only if you need to restore out-of-service components. If you do not need to restore out-of-service components, perform this procedure during periods of low traffic.

DANGER
Risk of electrocution
Some of the terminals inside the frame supervisory panel (FSP) have an electrical potential of -48 V dc. Make sure that you remove all jewelry before you replace a card in the FSP. Do not touch any terminal inside the FSP.

Obtain a replacement card. Make sure that the replacement card and the card that you replace have the same PEC and PEC suffix.

At the frame

2 Use the following table to identify the slot that contains the alarm and control card that you replace.

Card	Slot	Card position
NT0X91AA	slot CD1	rear
NT0X91AD	slot CD2	front

NT0X91
in a line module equipment frame (continued)

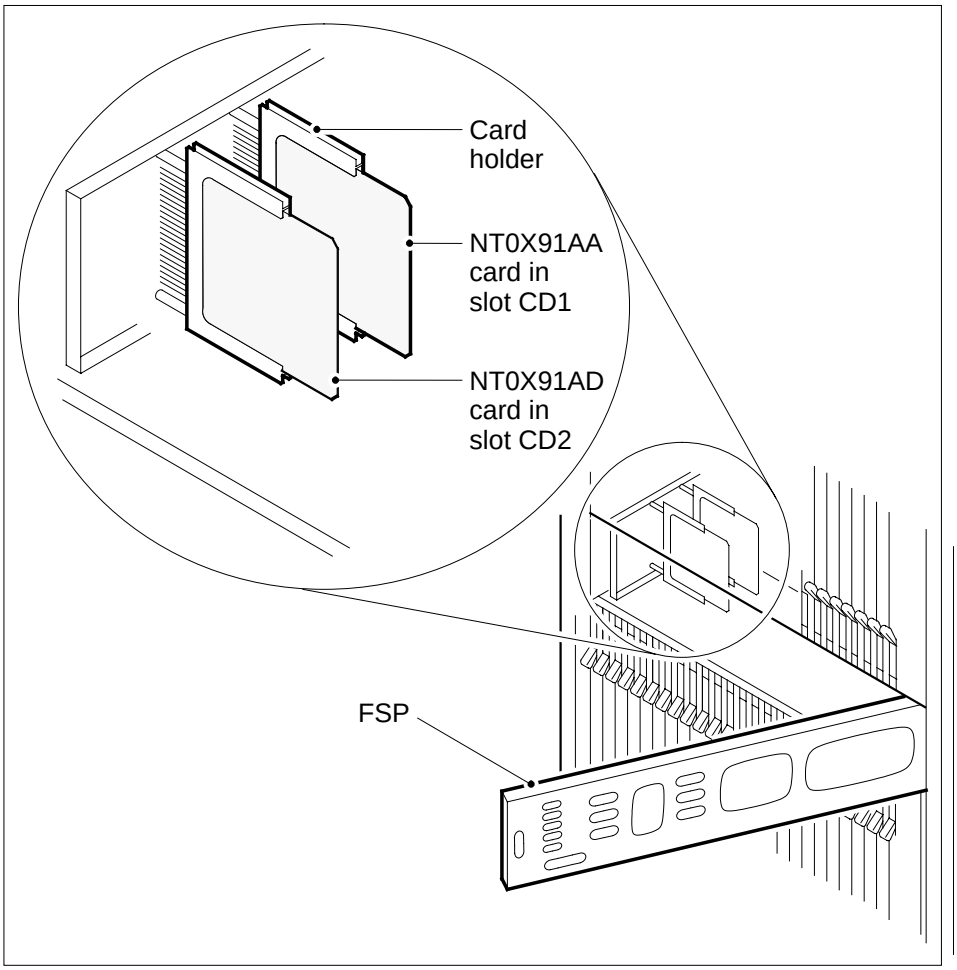

3 Use the following table to identify the converters and circuit breakers that associate with the alarm and control card you replace.

Card	Power converter	FSP circuit breaker
NT0X91AD	NT2X05 (RG 0) in slot 1	CB1
NT0X91AA	NT2X05 (RG 1) in slot 5	CB2
NT0X91AD	NT2X70 in slot 22	CB3

Note: Circuit breakers are on the FSP.

NT0X91
in a line module equipment frame (continued)

At the MAP terminal

4 To access the PM level of the MAP display, type

>MAPCI;MTC;PM

and press the Enter key.

5 To post the line module (LM) that contains the alarm and control card you want to replace, type

>POST LM bay_no pair_no

and press the Enter key.

where

bay_no
is the number of the LM bay (0 to 511)

pair_no
is the number of the LM in the bay (0 or 1)

6 The next action depends on the card that you replace.

If you	Do
replace the NT0X91AA	step 7
replace the NT0X91AD	step 11

7 Determine the state of the ringing generators (RG).

If	Do
either RG is `Standby`	step 34
RG 1 (slot 05) is `InSv` or `ISTb` and RG 0 (slot 01) is `InSv` or `ISTb`	step 8
RG 1 (slot 05) is `InSv` or `ISTb` and RG 0 (slot 01) is `ManB` or `SysB`	step 34
RG 1 (slot 05) is `ManB`	step 10
RG 1 (slot 05) is `SysB`	step 8

8 To manually busy the ringing generator interface (RGI) for RG 1, type

>BSY RGI 1

and press the Enter key.

Example of a MAP response:
WARNING:CALLS IN RINGING STATE USING THIS RGI WILL BE LOSTDO YOU WANT TO CONTINUE ?Please confirm ("YES", "Y", "NO", or "N"):

NT0X91
in a line module equipment frame (continued)

9 To confirm the command, type

>YES

and press the Enter key.

Example of a MAP response:
OK

At the frame

10

> **WARNING**
> **Static electricity damage**
> Wear a wrist strap that connects to the wrist-strap grounding point of a frame supervisory panel (FSP) or a modular supervisory panel (MSP) to handle circuit cards. The wrist strap protects the cards against static electricity damage.

Pull down and set the handle of the POWER switch on RG 1 (slot 5) to the OFF position.

Go to step 18.

11 Determine the state of the LM.

If the state of the LM	Do
is `InSv` or `ISTb`	step 12
is `SysB` or `CBsy`	step 15
is `ManB`	step 16
is `Offl`	step 35

12 To post the mate LM, type

`>POST LM site frame_no unit_no`

and press the Enter key.

where

site
is the PM location (alphanumeric)

frame_no
is the frame number (0 to 511)

unit_no
is the PM unit number (0 or 1)

NT0X91
in a line module equipment frame (continued)

13 Determine the state of the mate LM and the state of the RGs of the mate LM.

If	Do
the state of the mate LM is `InSv` or `ISTb` and both RGs are `InSv`	step 14
the states of the mate LM and RGs are other than listed here	step 36

14 To post the LM on which you want to replace a card, type

`>POST LM site frame_no unit_no`

and press the Enter key.

where

site
is the PM location (alphanumeric)

frame_no
is the frame number (0 to 511)

unit_no
is the PM unit number (0 or 1)

15 To manually busy the LM, type

`>BSY`

and press the Enter key.

Example of a MAP display:

```
          SysB    ManB    OffL    CBsy    ISTb   InSv
 PM          3       1       0       0       0     71
 LM          0       1       0       0       0      1


 LM  HOST 01 0  ManB
 RGen : 0 Standby     1 InSv
 bsy
 OK
```

NT0X91
in a line module equipment frame (continued)

At the frame

16

> **WARNING**
> **Static electricity damage**
> Wear a wrist strap that connects to the wrist-strap grounding point of a frame supervisory panel (FSP) or a modular supervisory panel (MSP) to handle circuit cards. The wrist strap protects the cards against static electricity damage.

Pull down and set the handle of the power converter POWER switch to the OFF position.

17 Pull down and set the handle of the POWER switch on RG 0 (slot 1) to the OFF position.

18 Unscrew the slotted nut on the left of the FSP.

19 Open the FSP.

20

> **WARNING**
> **Loss of service**
> Make sure that the alarm and control card that you remove controls the power converter. The alarm and control card also can control the RG that you powered down. Removal of the wrong card causes a loss of service.

Remove the NT0X91 card from the slot that you identified in step 2.

21 Insert the replacement card.

22 Close the FSP.

23 Tighten the slotted nut on the FSP.

24 The next action depends on the card that you replace.

If you	Do
replace the NT0X91AA	step 25
replace the NT0X91AD	step 27

25 Power up RG 1.

a Pull up and set the handle of the POWER switch to the ON position.

b Press and hold the RESET button on the RG.

NT0X91
in a line module equipment frame (continued)

c Pull up and set the handle of the converter circuit breaker on the FSP or MSP until the handle clicks into place.

d Release the RESET button.

At the MAP terminal

26 To return the RGI to service, type

>RTS RGI rgi_no

and press the Enter key.

where

rgi_no
is the number (0 or 1) of the RGI

Example of a MAP response:

```
OK.
```

Go to step 32.

27 Power up the converter, as follows.

a Pull up and set the handle of the POWER switch to the ON position.

b Press and hold the RESET button on the power converter.

c Pull up and set the handle of the converter circuit breaker on the FSP or MSP until the handle clicks into place.

d Release the RESET button.

28 Power up RG 0.

a Pull up and set the handle of the POWER switch to the ON position.

b Press and hold the RESET button on the RG.

c Pull up and set the handle of the converter circuit breaker on the FSP or MSP until the handle clicks into place.

d Release the RESET button.

29 To load the LM, type

>LOADPM

and press the Enter key.

Example of a MAP response:

```
LM HOST 01 0  LoadPM  PASSED
```

30 To load the PM unit, perform the procedure *Loading a PM* in this document. Complete the procedure and return to this point.

31 To return the LM to service, type

>RTS

and press the Enter key.

NT0X91
in a line module equipment frame (end)

Example of a MAP response:

```
rts
OK.
InSvce Tests Initiated
OK.
```

32 The next action depends on the reason that you perform this procedure.

If a maintenance procedure	Do
directed you to this maintenance procedure	step 33
did not direct you to this procedure	step 38

33 Return to the maintenance procedure that directed you to this procedure. Continue as directed by the maintenance procedure.

34 If you manually busy the RG, you disable all RGs in the LM bay. To determine how to proceed, consult the next level of support. Continue as directed by the next level of support.

35 To determine why the component is offline, consult operating company personnel. Continue as directed by operating company personnel.

36 If you manually busy the LMC, you lose calls in progress. To determine how to proceed, consult the next level of support. Continue as directed by the next level of support.

37 For additional help, contact the next level of support.

38 The procedure is complete.

NT0X91 in an MS6E

Application

Use this procedure to replace an NT0X91 in a CCS6 message switch equipment (MS6E) frame, as listed in the following table.

If you cannot identify the product engineering code (PEC), suffix, or shelf or frame for the card to replace, refer to the Index. The Index provides a list of the cards, shelves, and frames documented in this card replacement book.

PEC	Suffix	Card name	Shelf or frame name
NT0X91	AA	FSP drive and alarm circuit pack	MS6E
NT0X91	AE	FSP drive and protection circuit pack	MS6E

Common procedures

This procedure refers to the following:

- *Manually busying Series II PM C-side links*
- *Loading a PM*

Do not go to the common procedure unless the step-action procedure directs you.

Action

This procedure contains a summary flowchart and a list of steps. Use the flowchart to review the procedure. Follow the steps to perform the procedure.

NT0X91 in an MS6E (continued)

Summary of replacing a NT0X91 in an MS6E

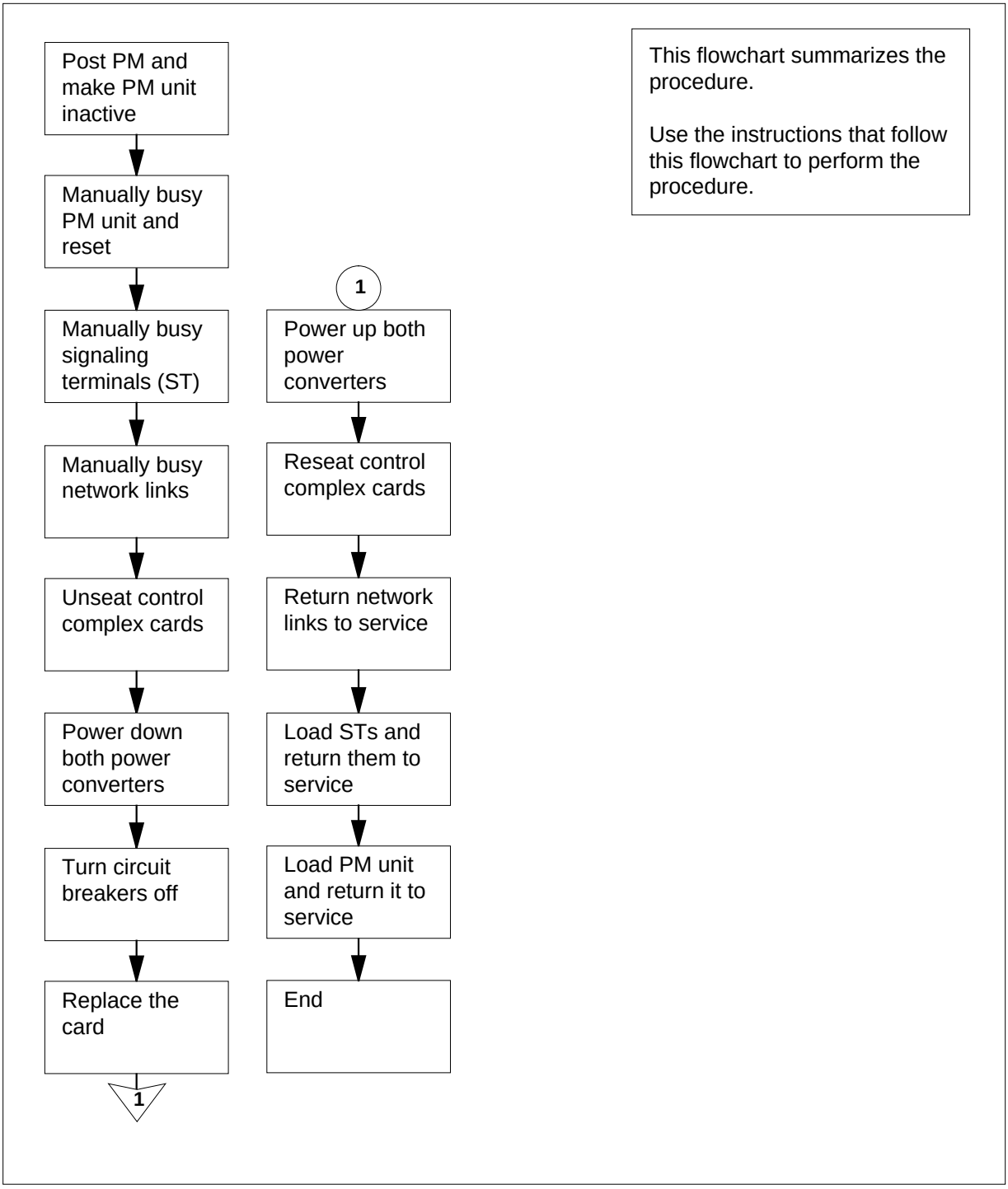

NT0X91
in an MS6E (continued)

NT0X91 in an MS6E

At your current location

1

DANGER
Risk of electrocution
Some of the terminals inside the frame supervisory panel (FSP) have an electrical potential of -48 V dc. Remove all jewelry before you replace a card in the FSP. Do not touch any terminal inside the FSP.

DANGER
Loss of service
This procedure manually busies one or more peripheral module (PM) units, which can cause service degradation. Perform this procedure only if you need to restore out-of-service components. If this procedure is not needed for a return to service, perform this procedure during periods of low traffic only.

DANGER
Loss of service
This procedure manually busies one or more signaling terminals (ST), which can cause service degradation. Perform this procedure only if you need to restore out-of-service components. If this procedure is not required for a return to service, perform this procedure during periods of low traffic only.

Obtain a replacement card. Make sure that the replacement card has the same PEC, including suffix, as the card being removed.

2 Record the FSP slot, frame circuit breakers (CB), shelves, signaling terminal controllers (STC), MSB6 unit number, and power converter slot associated

NT0X91
in an MS6E (continued)

with the NT0X91 card you will replace. Use the following table and diagram to obtain this information.

Card	FSP Slot	CB	Shelf and PM information	PC slot
NT0X91AA	CD1	CB5	shelf 51, MSB6 unit 0 (right side)	25
NT0X91AA	CD1	CB4	shelf 51, STCM 0 (left side)	01
NT0X91AE	CD2	CB2	shelf 65, MSB6 unit 1 (right side)	25
NT0X91AE	CD2	CB1	shelf 65, STCM 1 (left side)	01

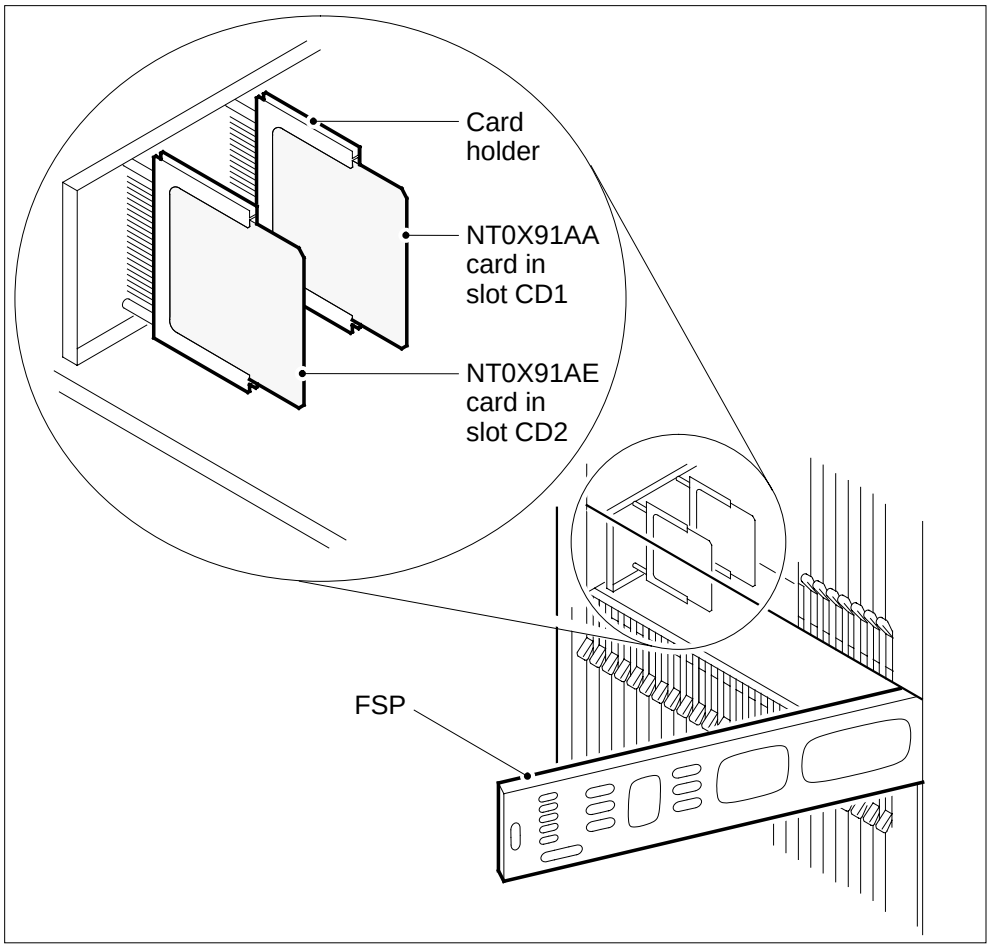

NT0X91
in an MS6E (continued)

At the MAP terminal

3 To access the PM level of the MAP display, type

>MAPCI;MTC;PM

and press the Enter key.

Example of a MAP display:

```
                 SysB    ManB    OffL    CBsy    ISTb    InSv
PM                 12       0       2       0      13      24
```

4 To post the MSB, type

>POST MSB6 pm_no

and press the Enter key.

where

pm_no
is the PM number (0 to 999)

Example of a MAP display:

```
                    SysB    ManB    OffL    CBsy    ISTb
  PM                  12       0       2       0      13
  MSB6                 0       0       0       0       0

MSB6    0 InSv  Links_OOS: CSide  0 , PSide  0
Unit0:   Inact InSv
Unit1:   Act   InSv
```

5 Determine the state and activity of the PM unit associated with the card you are replacing.

If the state of the PM unit	Do
is ISTb, InSv, SysB, or CBsy, and active	step 6
is ISTb, InSv, SysB, or CBsy, and inactive	step 9
is ManB	step 11
is OffL	step 55

6 Determine the state of the mate PM unit.

If the state of the mate PM unit	Do
is ISTb or InSv	step 7
is other than listed here	step 57

NT0X91
in an MS6E (continued)

7 To switch activity, type

>SWACT

and press the Enter key.

Example of a MAP response:

```
MSB6 0    A Warm SwAct will be performed after
          data sync of active terminals.
Please confirm ("YES", "Y", "NO", or "N"):
```

If	Do
you must confirm the command	step 8
the system rejects the SWACT	step 56

8 To confirm the command, type

>YES

and press the Enter key.

Example of a MAP response:

```
Unit0:   Inact SysB  Mtce
Unit1:   Act   ISTb

MSB6 0    SwAct Passed
```

If the MAP response	Do
is `SWACT passed`	step 9
is other than listed here	step 56

9 A maintenance flag (Mtce) can appear. This flag indicates that system-initiated maintenance tasks are in progress. Wait until the flag disappears from the status lines for both PM units before you proceed to the next step.

10 To manually busy the inactive unit, type

>BSY UNIT unit_no

and press the Enter key.

where

unit_no
is the PM unit number (0 or 1)

Example of a MAP response:

NT0X91
in an MS6E (continued)

```
MSB6    0 ISTb  Links_OOS: CSide  0 , PSide  0
Unit0:   Inact ManB
Unit1:   Act   InSv
bsy unit 0
MSB6 0 Unit 0   Bsy Passed
```

If the BSY command	Do
passed	step 11
failed	step 57

11 To reset the PM unit, type

>PMRESET UNIT unit_no NORUN

and press the Enter key.

where

unit_no
is the PM unit number (0 or 1)

Example of a MAP response:

```
MSB6 0 Unit 0   PMReset Passed
```

12 To access the STC level of the MAP display, type

>STC

and press the Enter key.

13 To post the STC that you recorded in step 2, type

>POST STCM stcm_no

and press the Enter key.

where

stcm_no
is the STCM number (0 to 9)

14 To manually busy the signaling terminals (ST), type

>BSY ALL

and press the Enter key.

Example of a MAP response:

```
STC 301
STC 302
STC 303
STC 304
This will busy the above STC(S)
Please confirm ("YES", "Y", "NO", or "N"):
```

NT0X91 in an MS6E (continued)

15 To confirm the command, type

>YES

and press the Enter key.

16 To return to the PM level of the MAP display, type

>QUIT

and press the Enter key.

17 To manually busy C-side links associated with the shelf in use, use the procedure *Manually busying Series II PM C-side links*. The procedure *Manually busying Series II PM C-side links* appears in this document. Complete the procedure and return to this point.

At the frame

18

WARNING
Static electricity damage
Wear a wrist strap connected to the wrist-strap grounding point of a frame supervisory panel (FSP) or a modular supervisory panel (MSP) to handle circuit cards. The wrist strap protects the cards against static electricity damage.

Unseat cards in the control complex.

a Unseat the NT6X43 message interface card in slot 20.

b Unseat the NT6X45 signaling processor card in slot 19.

c Unseat the NT6X45 master processor card form slot 15.

19 To power down the power converter in slot 01, pull and set the POWER switch handle down to the OFF position.

20 To power down the power converter in slot 25, pull and set the POWER switch handle down to the OFF position.

21 Turn off the CBs for the shelf associated with the NT0X91 card you are replacing

22 Unscrew the slotted nut on the left-hand side of the FSP.

23 Open the FSP.

NT0X91
in an MS6E (continued)

24

> **WARNING**
> **Loss of service**
> Make sure that the alarm and control card you remove controls the shelves with the STs that you set to manually busy. Removal of the wrong card causes loss of service.

Remove the NT0X91 card from the CD slot in the FSP.

25 Place the removed card in an electrostatic discharge (ESD) protective container.

26 Make sure that the replacement card has the same PEC, including suffix, as the removed card.

27 Insert the replacement card.

28 Close the FSP.

29 Tighten the slotted nut on the FSP.

30 The next action depends on the power converter version and the type of supervisory panel.

If the power converter	Do
is an NT2X70AE card and the FSP has circuit breakers	step 31
is an NT2X70AE card and the FSP does not have circuit breakers	step 32
is not an NT2X70AE card and the FSP has circuit breakers	step 33
is not an NT2X70AE card and the FSP does not have circuit breakers	step 34

31 Power up the converter.

a Pull the set the POWER switch handle up to the RESET position and hold.

b Set the converter circuit breaker handle on the FSP up until it clicks into place.

c Release the POWER switch handle.

Go to step 35.

32 Power up the converter.

NT0X91
in an MS6E (continued)

a Pull and set the POWER switch handle up to the RESET position and hold until the CONVERTER FAIL LED goes off.

b Release the handle.

Go to step 35.

33 Power up the converter.

a Pull and set the POWER switch handle up to the ON position.

b Press and hold the RESET button on the power converter.

c Set the converter circuit breaker handle on the FSP up until it clicks into place.

d Release the RESET button.

Go to step 35.

34 Power up the converter.

a Pull and set the POWER switch handle up to the ON position.

b Press and hold the RESET button on the power converter until the CONVERTER FAIL LED goes off.

c Release the RESET button.

35 Repeat steps 30 to 34 for the other power converter. Turn on both power converters and go to step 36.

36 Reseat cards in the control complex.

a Reseat the NT6X45 master processor card in slot 15.

b Reseat the NT6X45 signaling processor card in slot 19.

c Reseat the NT6X43 message interface card in slot 20.

At the MAP terminal

37 The next action depends on the type of network in the office.

If you	Do
are working on JNET	step 38
are working on ENET	step 40

38 To return to service one of the network links associated with the PM unit in use, type

`>RTS plane_no link_no`

and press the Enter key.

where

plane_no
is the number of the plane (0 or 1) for the link

link_no
is the link number (0 to 63)

If the link	Do
returned to service and more manual-busy links are present	step 39
returned to service and no more manual-busy links are present	step 41
did not return to service	step 57

39 Repeat step 38 for all C-side links for the PM unit in use. When you correctly return all C-side links to service, go to step 41.

40 To return the link to service, type

>RTS plane_no LINK link_no

and press the Enter key.

where

plane_no
is the number of the plane (0 or 1) for the link

link_no
is the link number (0 to 63)

Example of a MAP response:

```
Request to RTS ENET Plane:0 Shelf:00 Slot:32 Link:01 sybmitted.
Request to RTS ENET Plane:0 Shelf:00 Slot:32 Link:01 passed.
```

If the link	Do
returned to service	step 41
did not return to service	step 57

41 To return to the STC level of the MAP display, type

>PM;STC

and press the Enter key.

42 To post the STCM, type

>POST STCM stcm_no

and press the Enter key.

where

stcm_no
is the STCM number (0 to 9)

NT0X91
in an MS6E (continued)

43 To load the STs, type

>LOADPM ALL

and press the Enter key.

Example #1 of a MAP response:

```
STC 301  load Passed : <loadname>
STC 302  load Passed : <loadname>
STC 303  load Passed : <loadname>
STC 304  load Passed : <loadname>
```

Example #2 of a MAP response:

```
STC load '<loadname>' not in MSB6 0
```

If the LOADPM command	Do
passed	step 49
failed, with the message `STC Load <loadname> not in <msb_unit>`	step 44
failed, with messages other than listed here	step 46

Note: As shown above in *Example of a MAP response #2*, `loadname` is the name of the ST load; `msb_unit` is the MSB6 and the unit number.

44 To return to the PM level of the MAP display, type

>QUIT

and press the Enter key.

45 To add the load to the MSB6, type

>STCLOAD UNIT unit_no ADD loadname

and press the Enter key.

where

unit_no
is the PM unit number (0 or 1)

loadname
is the STC load name

If the STCLOAD command	Do
failed	step 46
passed	step 49

NT0X91
in an MS6E (continued)

46 To load the PM unit, use the procedure *How to load a PM* in this document. Complete the procedure and return to this point.

47 To return to the STC level of the MAP display, type

>STC

and press the Enter key.

48 To post the STCM, type

>POST stcm_no

and press the Enter key.

where

stcm_no
is the STCM number (0 to 9)

Go to step 43.

49 To return the STs to service, type

>RTS ALL

and press the Enter key.

Example of a MAP response:

```
STC 301   Out-of-service test initiated
STC 301 Tst Passed
STC 301 Rts Passed
STC 302   Out-of-service test initiated
STC 302 Tst Passed
STC 302 Rts Passed
STC 303   Out-of-service test initiated
STC 303 Tst Passed
STC 303 Rts Passed
STC 304   Out-of-service test initiated
STC 304 T Passed
STC 304 Rts Passed
```

If the RTS command	Do
passed for all STs	step 50
failed for any ST	step 57

50 The next action depends on your reason for performing this procedure.

If	Do
a maintenance procedure directed you to this procedure	step 51
a maintenance procedure did not direct you to this procedure	step 52

NT0X91 in an MS6E (end)

51 Return to the maintenance procedure that sent you to this procedure and continue as directed.

52 To load the inactive unit, type

`>LOADPM UNIT unit_no`

and press the Enter key.

where

unit_no
is the PM unit number (0 or 1)

If the LOADPM command	Do
failed	step 53
passed	step 54

53 To load the PM unit, use the procedure *Loading a PM* in this document. Complete the procedure and return to this point.

54 To return the inactive unit to service, type

`>RTS UNIT unit_no`

and press the Enter key.

where

unit_no
is the PM unit number (0 or 1)

If the RTS command	Do
passed	step 57
failed	step 58

55 Consult office personnel to determine why the component is offline. Continue as directed by office personnel.

56 For additional help with switch of activity, contact the next level of support.

Note: If the system recommends use of the SWACT command with the FORCE option, consult office personnel. Consult office personnel to determine if you have permission to use the option.

57 For additional help, contact the next level of support.

58 The procedure is complete.

NT0X91
in an MS7E, ST7E, or ST6E

Application

Use this procedure to replace a NT0X91 in the shelves or frames listed in the following table.

If you cannot identify the product engineering code (PEC), suffix, or provisioned shelf or frame for the card to replace, refer to the Index. The Index provides a list of the cards, shelves, and frames documented in this card replacement book.

PEC	Suffix	Card name	Shelf or frame name
NT0X91	AA	FSP drive and alarm circuit card	signaling terminal 6 equipment (ST6E) frame, signaling terminal 7 equipment (ST7E) frame
NT0X91	AE	FSP drive and protection circuit card	CCS7 message buffer equipment (MS7E) frame, ST6E, ST7E

Note: This procedure is not used to change the NT0X91AA FSP drive and alarm circuit card in the MS7E frame. If card replacement is necessary for this card in the MS7E, contact your next level of support.

Common procedures

This procedure refers to *Loading a PM*.

Do not go to the common procedure unless the step-action procedure directs you to go.

Action

This procedure contains a summary flowchart and a list of steps. Use the flowchart to review the procedure. Follow the steps to perform the procedure.

NT0X91
in an MS7E, ST7E, or ST6E (continued)

Summary of replacing a NT0X91 in an MS7E, ST7E or ST6E

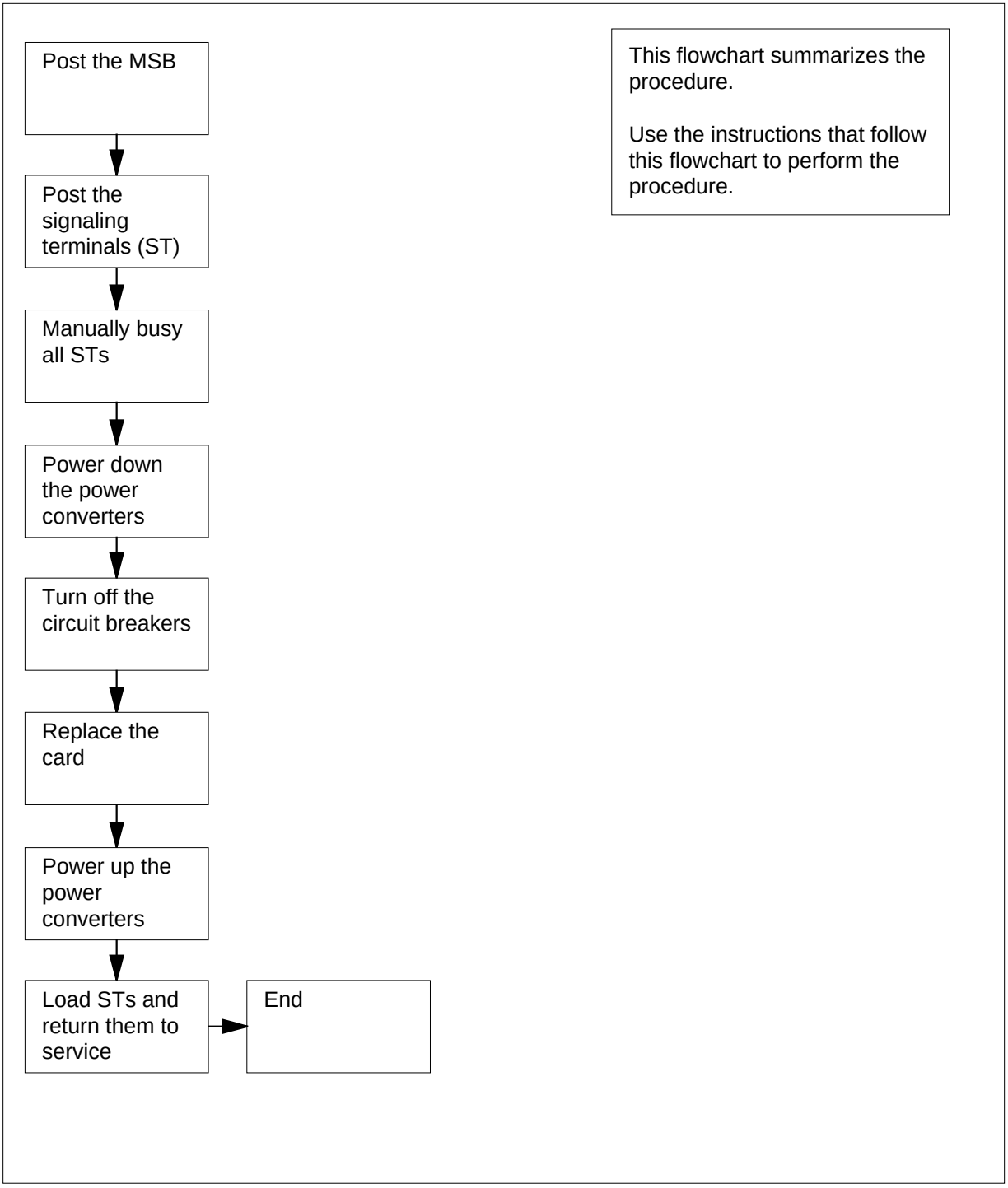

NT0X91
in an MS7E, ST7E, or ST6E (continued)

Replacing a NT0X91 in an MS7E, ST7E, or ST6E

At your current location

1

DANGER
Risk of electrocution
Some of the terminals inside the frame supervisory panel (FSP) have an electrical potential of -48 V dc. Remove all jewelry before you replace a card in the FSP. Do not touch any terminal inside the FSP.

WARNING
Loss of service
This procedure manually busies one or more signaling terminals (ST), which can cause service degradation. Perform this procedure during low traffic periods only.

The next action depends on the version of the NT0X91 you are replacing.

If the card you are replacing	Do
is a NT0X91AA in an MS7E	step 41
is a NT0X91AE in an MS7E	step 2
is a NT0X91AA or NT0X91AE in a ST7E or ST6E	step 5

2 Obtain a replacement card. Make sure that the replacement card has the same product engineering code (PEC), including suffix, as the card being removed.

3 For the MS7E, record the FSP slot, frame circuit breakers (CB), shelves, CCS7 signaling terminal groups (ST7G), and power converter slots associated with the NT0X91 card you are replacing. Use the following table to obtain this information.

Note: The signaling terminal controller (STC) is called a signaling terminal controller module (STCM) for a CCS6 message switch and buffer (MSB6). The signaling terminal controller (STC) is called a CCS7 signaling terminal group (ST7G) for a CCS7 message switch and buffer

NT0X91
in an MS7E, ST7E, or ST6E (continued)

(MSB7). In this procedure, the name STC refers to both ST7Gs and signaling-terminal controller modules (STCM).

Card	FSP Slot	CB	Shelf and PM information	PC slot
NT0X91AE	CD2	CB4	shelf 51, ST7G 3 (right side)	01
NT0X91AE	CD2	CB3	shelf 18, ST7G 0 (right side)	01
NT0X91AE	CD3	CB5	shelf 32, ST7G 1 (left side)	01
NT0X91AE	CD3	CB1	shelf 51, ST7G 2 (left side)	25

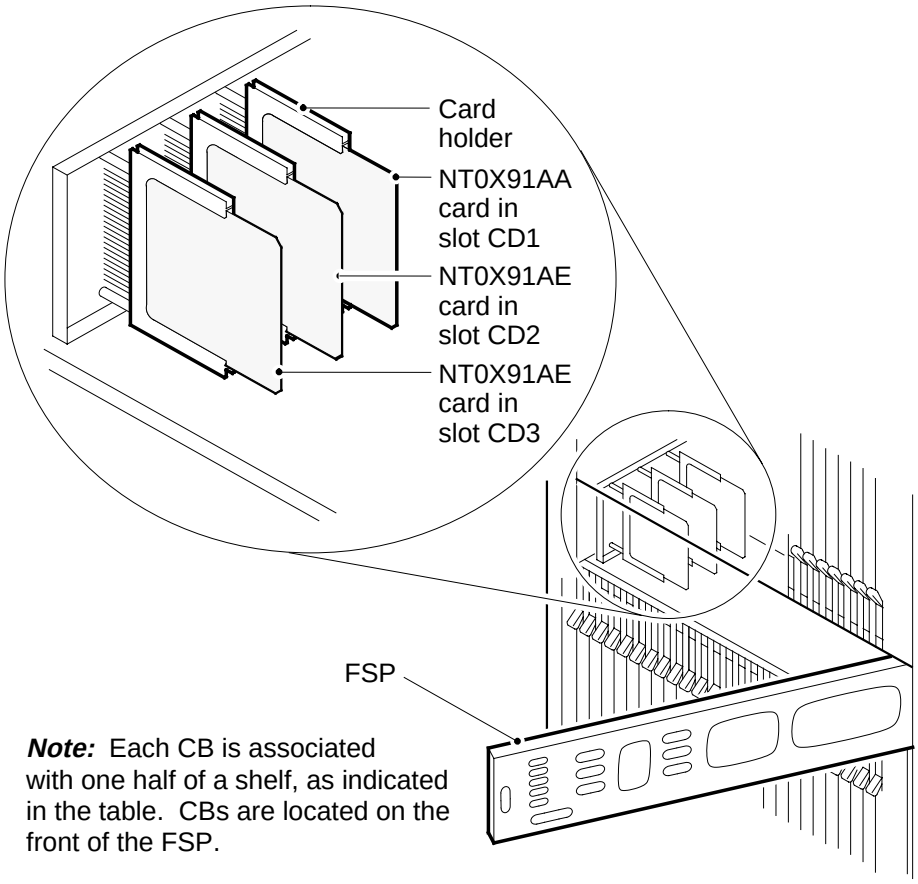

Note: Each CB is associated with one half of a shelf, as indicated in the table. CBs are located on the front of the FSP.

4 Go to step 7.

NT0X91
in an MS7E, ST7E, or ST6E (continued)

5 Obtain a replacement card. Make sure that the replacement card has the same product engineering code (PEC), including suffix, as the card being removed.

6 For the ST6E and ST7E, record the FSP slot, frame circuit breakers (CB), shelves, signaling terminal controllers (STC), and power converter slots associated with the NT0X91 card you are replacing. Use the following table to obtain this information (see also the figure in step 3).

Note: The signaling terminal controller (STC) is called a signaling terminal controller module (STCM) for a CCS6 message switch and buffer (MSB6). The signaling terminal controller (STC) is called a CCS7 signaling terminal group (ST7G) for a CCS7 message switch and buffer (MSB7). In this procedure, the name STC refers to both ST7Gs and signaling terminal controller modules (STCM).

Card	FSP Slot	CB	Shelf and PM information	PC slot
NT0X91AA	CD1	CB3	shelf 18, STC 5 (right side)	01
NT0X91AA	CD1	CB6	shelf 18, STC 4 (left side)	25
NT0X91AE	CD2	CB2	shelf 32, STC 7 (right side)	01
NT0X91AE	CD2	CB1	shelf 51, STC 9 (right side)	01
NT0X91AE	CD3	CB5	shelf 32, STC 6 (left side)	25
NT0X91AE	CD3	CB4	shelf 51, STC 8 (left side)	25

At the MAP terminal

7 To access the PM level of the MAP display, type

>MAPCI;MTC;PM

and press the Enter key.

Example of a MAP display:

```
          SysB    ManB    OffL    CBsy    ISTb    InSv
PM                  0       5       6       0       2
```

8 To post the MSB, type

>POST pm_type pm_no

and press the Enter key.

where

pm_type
is the PM type (MSB6, MSB7)

NT0X91
in an MS7E, ST7E, or ST6E (continued)

pm_no
is the PM number (0 to 999)

Example of a MAP display:

```
                    SysB    ManB    OffL    CBsy    ISTb    InSv
 PM                    0       5       6       0       2      41
 MSB7                  0       0       1       0       0       1

MSB7    0 InSv  Links_OOS: CSide  0 , PSide  0
Unit0:   Inact InSv
Unit1:   Act   InSv
```

9 To access the STC level of the MAP display, type

>STC

and press the Enter key.

Example of a MAP display:

```
                    SysB    ManB    OffL    CBsy    ISTb    InSv
 PM                    0       5       6       0       2      41
 MSB7                  0       0       1       0       0       1

MSB7    0 InSv  Links_OOS: CSide  0 , PSide  0
Unit0:   Inact InSv
Unit1:   Act   InSv

STC                 0       0       0       0       0

STC        STCM        Ctrl
```

10 To post one of the STCs that you recorded in previous steps, type

>POST stc_type stcm_no

and press the Enter key.

where

stc_type
is the STC type (STCM, ST7G)

stcm_no
is the STC number (0 to 9)

Example of a MAP display:

NT0X91
in an MS7E, ST7E, or ST6E (continued)

```
                    SysB    ManB    OffL    CBsy    ISTb    InSv
   PM                  0       5       6       0       2      41
   MSB7                0       0       1       0       0       1

MSB7    0 InSv  Links_OOS: CSide  0 , PSide  0
Unit0:   Inact InSv
Unit1:   Act   InSv

   STC                 0       0       0       0       0

STC  100   STCM  0     Ctrl  0     Bd    InSv
```

11 To manually busy the signaling terminals (ST), type

>BSY ALL

and press the Enter key.

Example of a MAP response:

```
STC 301
STC 302
STC 303
STC 304
This will busy the above STC(S)
Please confirm ("YES", "Y", "NO", or "N"):
```

12 To confirm the command, type

>YES

and press the Enter key.

If you	Do
set STs in both STCMs to busy	step 14
set STs in only one STCM to busy	step 13

13 Repeat steps 10 to 12 for the other STC.

NT0X91
in an MS7E, ST7E, or ST6E (continued)

At the frame

14

> **WARNING**
> **Static electricity damage**
> Wear a wrist strap that connects to the wrist-strap grounding point of a frame supervisory panel (FSP) or a modular supervisory panel (MSP) to handle circuit cards. The wrist strap protects the cards against static electricity damage.

To power down the power converter for the first STC, pull and set the POWER switch handle down to the OFF position.

15 Repeat step 14 for the power converter for the second STC associated with the card you are replacing.

16 Turn off the CBs for the power converters associated with the card you are replacing.

17 Unscrew the slotted nut on the left-hand side of the FSP.

18 Open the FSP.

19

> **WARNING**
> **Loss of service**
> Make sure that the alarm and control card you remove controls the shelves with the STs that you set to manually busy. Removal of the wrong card causes a loss of service.

Remove the NT0X91 card from the CD slot in the FSP.

20 Place the removed card in an electrostatic discharge (ESD) protective container.

21 Make sure that the replacement card has the same PEC, including suffix, as the removed card.

22 Insert the replacement card.

23 Close the FSP.

24 Tighten the slotted nut on the FSP.

25 The next action depends on the power converter version and the type of supervisory panel.

If the power converter	Do
is an NT2X70AE card and the FSP has circuit breakers	step 26

NT0X91
in an MS7E, ST7E, or ST6E (continued)

If the power converter	Do
is an NT2X70AE card and the FSP does not have circuit breakers	step 27
is not an NT2X70AE card and the FSP has circuit breakers	step 28
is not an NT2X70AE card and the FSP does not have circuit breakers	step 29

26 Power up the converter.

a Pull and set the POWER switch handle up to the RESET position and hold.

b Pull and set the converter circuit breaker handle on the FSP up until it clicks into place.

c Release the POWER switch handle.

Go to step 30.

27 Power up the converter.

a Pull and set the POWER switch handle up to the RESET position and hold until the CONVERTER FAIL LED goes off.

b Release the handle.

Go to step 30.

28 Power up the converter.

a Pull and set the POWER switch handle up to the ON position.

b Press and hold the RESET button on the power converter.

c Pull and set the converter circuit breaker handle on the FSP up until it clicks into place.

d Release the RESET button.

Go to step 30.

29 Power up the converter.

a Pull and set the POWER switch handle up to the ON position.

b Press and hold the RESET button on the power converter until the CONVERTER FAIL LED goes off.

c Release the RESET button.

NT0X91
in an MS7E, ST7E, or ST6E (continued)

At the MAP terminal

30 To load the STs, type

>LOADPM ALL

and press the Enter key.

where

unit_no
is the PM unit number (0 or 1)

Example #1 of a MAP response:

```
STC 301  load Passed : M7CQA01
STC 302  load Passed : M7CQA01
STC 303  load Passed : M7CQA01
STC 304  load Passed : M7CQA01
```

Example #2 of a MAP response:

```
STC load 'M7QA01' not in MSB7 0
```

If the LOADPM command	Do
passed	step 36
failed, with the message `STC Load loadname not in msb_unit`	step 31
failed, with a message other than listed here	step 33

Note: As shown above in *Example #2 of a MAP response:*, `loadname` is the name of the ST load; `msb_unit` is the MSB (MSB6, MSB7) and the unit number.

31 To return to the PM level of the MAP display, type

>QUIT

and press the Enter key.

32 To add the load to the MSB, type

>STCLOAD PM ADD loadname

and press the Enter key.

where

NT0X91
in an MS7E, ST7E, or ST6E (continued)

loadname
is the STC load name

If the STCLOAD command	Do
failed	step 33
passed	step 34

33 To load the PM unit, use the procedure *Loading a PM* in this document. Complete the procedure and return to this point.

34 To access the STC level of the MAP display, type

>STC

and press the Enter key.

35 To post the STC, type

>POST stcm_no

and press the Enter key.

where

stcm_no
is the STCM number (0 to 9)

Go to step 30.

36 To return the STs to service, type

>RTS ALL

and press the Enter key.

Example of a MAP response:
STC 301 Out-of-service test initiated
STC 301 Tst Passed
STC 301 Rts Passed
STC 302 Out-of-service test initiated
STC 302 Tst Passed
STC 302 Rts Passed
STC 303 Out-of-service test initiated
STC 303 Tst Passed
STC 303 Rts Passed
STC 304 Out-of-service test initiated
STC 304 TsT Passed
STC 304 Rts Passed

If the RTS command	Do
passed for all STs, and you have not worked on the other STC	step 37

NT0X91
in an MS7E, ST7E, or ST6E (end)

If the RTS command	Do
passed for all STs, and you have worked on the other STC	step 39
failed for any ST	step 42

37 To post the other STC, type

>POST stcm_no

and press the Enter key.

where

stcm_no
is the STC number (0 to 9)

38 Repeat steps 30 to 36 for the other STC. When you have loaded and returned to service all STs, go to step 39.

39 The next action depends on your reason for performing this procedure.

If	Do
a maintenance procedure directed you to this procedure	step 40
a maintenance procedure did not direct you to this procedure	step 43

40 Return to the maintenance procedure that sent you to this procedure and continue as directed.

41 For additional help with changing the NT0X91AA in the MS7E, contact the next level of support.

Note: To change the NT0X91AA, you must install a test strap to maintain power on the in-service PM unit. Use of a test strap in this event is advanced maintenance and qualified personnel must perform the installation.

42 For additional help, contact the next level of support.

43 The procedure is complete.

NT0X91
in a network equipment frame

Application

Use this procedure to replace an NT0X91 in the shelves or frames listed in the following table.

PEC	Suffix	Card name	Shelf or frame name
NT0X91	AA	Drive and alarm card	NT0X48 single-bay network (NET), NT5X13 combined single-bay network (NETC), NT8X11 dual shelf network (DSN)
NT0X91	AE	Drive and protection card	NET, NETC, DSN

If you cannot identify the product engineering code (PEC), PEC suffix, or shelf or frame for the card to replace, refer to the Index. The Index provides a list of the cards, shelves, and frames in this card replacement book.

Common procedures

There are no common procedures.

Action

This procedure contains a summary flowchart and a list of steps. Use the flowchart to review the procedure. Follow the steps to perform the procedure.

NT0X91
in a network equipment frame (continued)

Summary of replacing a NT0X91 in a network equipment frame

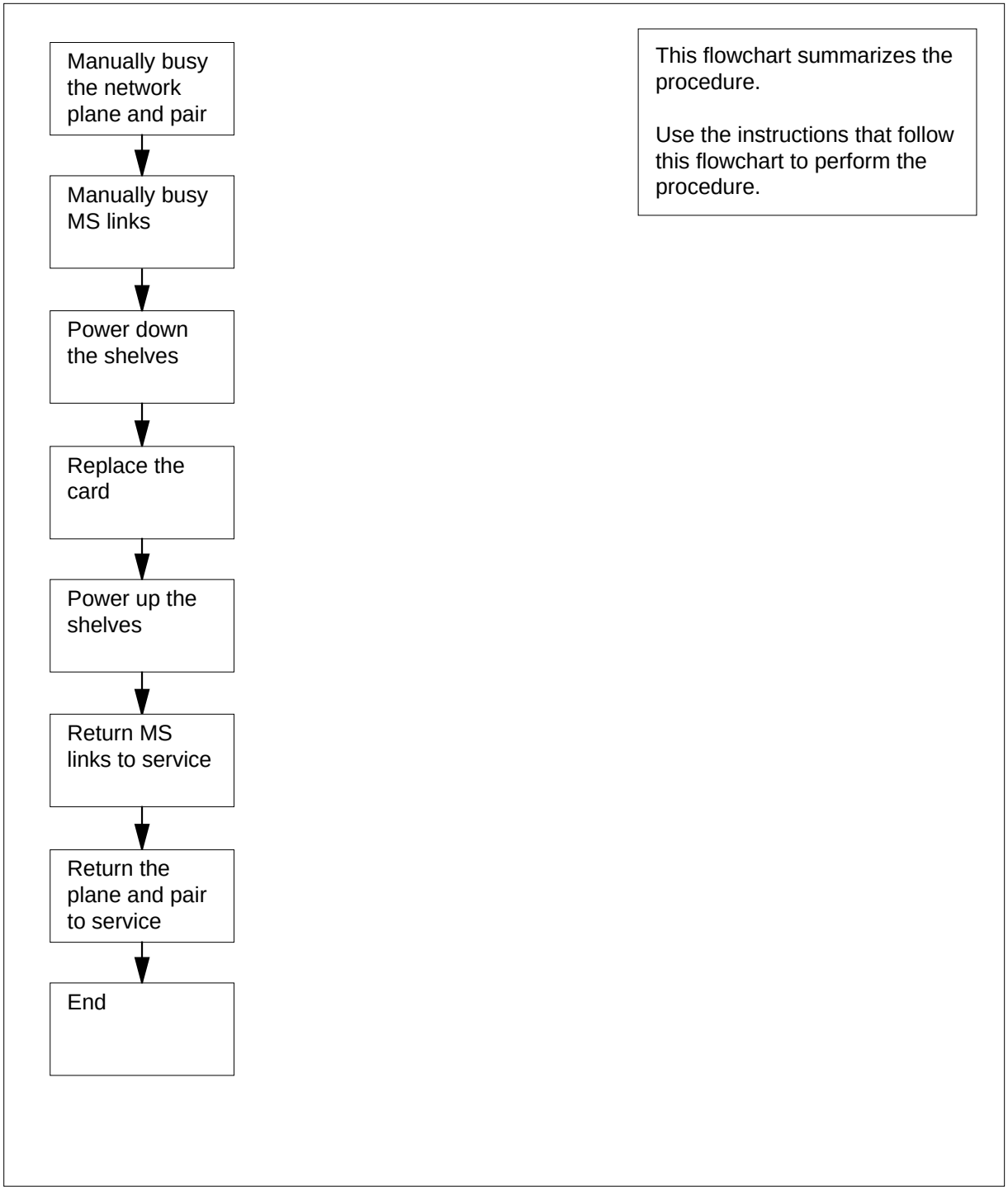

NT0X91
in a network equipment frame (continued)

Replacing a NT0X91 in a network equipment frame

At the frame

1

DANGER
Risk of electrocution
Some of the terminals inside the frame supervisory panel (FSP) have an electrical potential of -48 V dc. Remove all jewelry before you replace a card in the FSP.Make sure you do not touch any terminal inside the FSP.

WARNING
Loss of service
Before you perform this procedure, notify all far-end offices with common channel signaling of a possible temporary alarm. The out-of-service test used in this procedure can cause a temporary alarm in far-end offices.

WARNING
Loss of service
This procedure includes directions to manually busy one plane of a network pair, resulting in loss of network redundancy. Perform this procedure to restore out-of-service components as required. Unless it is urgent, carry out this procedure during periods of low traffic.

Obtain a replacement card. Make sure the replacement card and the card you replace have the same PEC and PEC suffix.

2 Use the following table to identify the slot that contains the alarm and control card that you replace:

NT0X91
in a network equipment frame (continued)

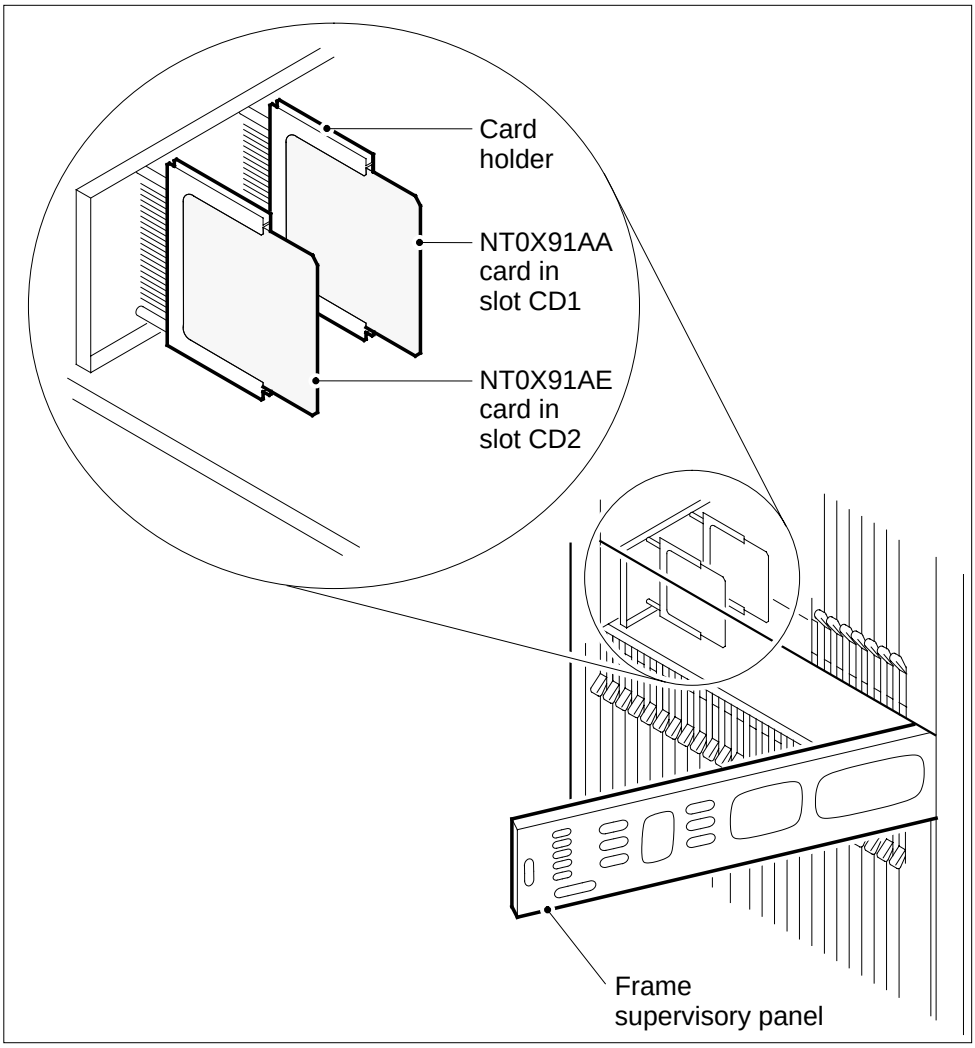

If Alarm and control card	Do Slot
is NT0X91AA	CD1
is NT0X91AE	CD2

NT0X91
in a network equipment frame (continued)

3 Record information on FSP fuses, FSP circuit breakers (CB), and network shelf positions associated with the card you replace. Use the following table to obtain this information.

(Sheet 1 of 2)

Network frame	FSP card	FSP card position	FSP fuses or CBs	Shelf position	Shelf function
NET (fuses)	NT0X91AA	CD1	F04	18	I/F
			F02	51	I/F
	NT0X91AE	CD2	F03	32	XPT
			F01	65	XPT
NET (CBs)	NT0X91AA	CD1	CB4	18	I/F
			CB2	51	I/F
	NT0X91AE	CD2	CB3	32	XPT
			CB1	65	XPT
NETC	NT0X91AA	CD1	CB2	51	XPT
			CB1	65	I/F
	NT0X91AE	CD2	CB5	18	I/F
			CB4	32	XPT
DSN	NT0X91AA	CD1	CB1	65	NM
			CB2	51	NM

Note 1: NET = NT0X48; NETC = NT5X13; DSN = NT8X11

Note 2: Some NT0X48 frames can have FSPs with fuses only.

Note 3: All NET shelves associate with a specific pair for a specified plane. NETC shelves 51 and 65 comprise the pair for plane 0, and shelves 18 and 32 comprise the pair for plane 1. DSN shelves 51 and 65 are each a pair associated with plane 0, and shelves 18 and 32 are each a pair that associate with plane 1.

Note 4: I/F = interface, XPT = crosspoint; NM = network module (combined I/F and XPT)

NT0X91
in a network equipment frame (continued)

(Sheet 2 of 2)

Network frame	FSP card	FSP card position	FSP fuses or CBs	Shelf position	Shelf function
	NT0X91AE	CD2	CB5	32	NM
			CB4	18	NM

Note 1: NET = NT0X48; NETC = NT5X13; DSN = NT8X11

Note 2: Some NT0X48 frames can have FSPs with fuses only.

Note 3: All NET shelves associate with a specific pair for a specified plane. NETC shelves 51 and 65 comprise the pair for plane 0, and shelves 18 and 32 comprise the pair for plane 1. DSN shelves 51 and 65 are each a pair associated with plane 0, and shelves 18 and 32 are each a pair that associate with plane 1.

Note 4: I/F = interface, XPT = crosspoint; NM = network module (combined I/F and XPT)

At the MAP terminal

4 To access the NET level of the MAP display, type

`>MAPCI;MTC;NET`

and press the Enter key.

Example of a MAP display:

```
Net                    11111  11111  22222  22222  33
 Plane  01234  56789  01234  56789  01234  56789  01
    0   S. . .
    1   . . . .
 JNET:
```

5 The next action depends on your knowledge about the network plane and pair associated with the card you replace.

If you	Do
know the network plane and pair associated with the card to replace	step 10
do not know the network plane and pair associated with the card to replace	step 6

6 Select a network plane and pair.

7 To display the frame and shelf location, type

`>LOC plane_no pair_no`

NT0X91
in a network equipment frame (continued)

and press the Enter key.

where

plane_no
is the network plane number (0 to 1)

pair_no
is the network plane pair number (0 to 31)

Example of a MAP response:

```
Site Flr RPos  Bay_id   Shf  Description    Slot     EqPEC
HOST  01  B09  NET0 00       NM  0-00                5X13
```

Note: The frame location appears under the Flr and RPos headers on the MAP display. For the NT8X11 DSN, the shelf location appears under the Shf header. The network plane and pair appear under the Bay_id header.

8 Correlate the location displayed with the known frame location of FSP card you will replace.

If the network module	Do
corresponds to the FSP card you replace	step 10
does not correspond to the FSP card you replace	step 9

9 Repeat step 6 for another network plane and pair. Identify a network plane and pair associated with the card you replace. Go to step 10.

10 To manually busy the plane and network module associated with the alarm and control card to replace, type

>BSY plane_no pair_no

and press the Enter key.

where

plane_no
is the network plane number (0 to 1)

pair_no
is the network plane pair number (0 to 31)

Example of a MAP response:

bsy 0 0
OK

If the BSY command	Do
passed	step 11

NT0X91
in a network equipment frame (continued)

If the BSY command	Do
needs confirmation	step 39
failed	step 40

11 Wait 30 min to make sure that calls in progress finish.

Note: If you replace a card that failed, you do not need the waiting period. Calls do not process on that network plane and pair.

12 To obtain information on the link to the message switch (MS), type

>TRNSL plane_no pair_no

and press the Enter key.

where

plane_no
is the number of the network plane (0 to 1)

pair_no
is the number of the network plane pair (0 to 31)

Example of a MAP response:

NM 0-0 = MS 0 and 1, Card 22 Port 1

13 Record the slot position and the port number of the MS port card that connects to the network plane and pair. In the example MAP response in step 12, the slot position is 22 and the port number is 1.

14 To access the MS;SHELF level of the MAP display, type

>MS;SHELF

and press the Enter key.

Example of a MAP display:

```
     Message Switch   Clock   Shelf  0       Inter-MS Link 0 1
MS 0       .          M Free         F                     - -
MS 1       S          Slave          C                     - -

Shelf 0                 1 1 1 1 1 1 1 1 1 1 2 2 2 2 2 2 2
Card  1 2 3 4 5 6 7 8 9 0 1 2 3 4 5 6 7 8 9 0 1 2 3 4 5 6
Chain
MS 0  . . I . . - - - - - - - - - - - - . . . . . . . F .
MS 1  C C C C C - - - - - - - - - - - - C C C C C C C C C
```

15 To post the card in the slot that you recorded in step 13, type

>CARD slot_no

and press the Enter key.

where

NT0X91
in a network equipment frame (continued)

slot_no
is the number of the card slot that you recorded in step 13

Example of a MAP display:

```
     Message Switch   Clock   Shelf  0       Inter-MS Link 0 1
MS 0       .          M Free         F                     - -
MS 1       S          Slave          C                     - -
Shelf 0                 1 1 1 1 1 1 1 1 1 1 2 2 2 2 2 2 2
Card  1 2 3 4 5 6 7 8 9 0 1 2 3 4 5 6 7 8 9 0 1 2 3 4 5 6
Chain
MS 0  . . I . . - - - - - - - - - - - - - . . . . . . . F .
MS 1  . . . . . - - - - - - - - - - - - - . . . . . . . . .

Card 22 Protocol Port  0_____3
MS 0  .   DS30     4   . P. . .
MS 1  .   DS30     4   . P . .
```

16 To manually busy the port on MS 0 that connects to the network plane and pair, type

>BSY 0 PORT port_no

and press the Enter key.

where

port_no
is the port number that you recorded in step 13

Example of a MAP response:

```
Request to MAN BUSY MS: 0 shelf: 0 card:22 port:  1 submitted.
Request to MAN BUSY MS: 0 shelf: 0 card:22 port:  1 passed.
```

17 To manually busy the port on MS1 that connects to the network plane and pair, type

>BSY 1 PORT port_no

and press the Enter key.

where

port_no
is the port number that you recorded in step 13

NT0X91
in a network equipment frame (continued)

At the frame

18

> **WARNING**
> **Static electricity damage**
> Wear a wrist strap that connects to the wrist-strap grounding point of a frame supervisory panel (FSP) or a modular supervisory panel (MSP) to handle circuit cards. The wrist strap protects the cards against static electricity damage.

Power down the shelves associated with the FSP card you replace.

a Choose a shelf.

b Pull down and set the handle of the POWER switch on the power converter to the OFF position.

c Repeat steps 18a.a and 18b.b for each power converter on the shelf.

d Repeat steps 18a.a to 18c.c for each shelf associated with the FSP card that you replace.

19 Unscrew the slotted nut on the left of the FSP.

20 Open the FSP.

21

> **WARNING**
> **Loss of service**
> Make sure that the alarm and control card that you remove controls the network modules that you manually busied. Removal of the wrong card causes a loss of service.

Remove the NT0X91 card from the correct slot.

22 Insert the replacement card.

23 Close the FSP.

24 Tighten the slotted nut on the FSP.

25 The next action depends on the type of power converter in the affected shelves and the type of supervisory panel.

If the shelf	Do
has an NT2X70AE card and the FSP has circuit breakers	step 26

NT0X91
in a network equipment frame (continued)

If the shelf	Do
has an NT2X70AE card and the FSP does not have circuit breakers	step 27
does not have an NT2X70AE card and the FSP has circuit breakers	step 28
does not have an NT2X70AE card and the FSP does not have circuit breakers	step 29

26 Power up the converter as follows:

a Pull up and set the handle of the POWER switch to the RESET position and hold.

b Pull up and set the handle of the converter circuit breaker on the FSP until the handle clicks into place.

c Release the handle of the POWER switch.

Go to step 30.

27 Power up the converter as follows:

a Pull up and set the handle of the POWER switch to the RESET position until the CONVERTER FAIL LED turns off.

b Release the handle.

Go to step 30.

28 Power up the converter as follows:

a Pull up and set the handle of the POWER switch to the ON position.

b Press and hold the RESET button on the power converter.

c Pull up and set the handle of the converter circuit breaker on the FSP until the handle clicks into place.

d Release the RESET button.

Go to step 30.

29 Power up the converter as follows:

a Pull up and set the handle of the POWER switch to the ON position.

b Press and hold the RESET button on the power converter until the CONVERTER FAIL LED turns off.

c Release the RESET button.

30 The next action depends on the power converter configuration for the shelf.

If the shelf	Do
has one power converter	step 32

NT0X91
in a network equipment frame (continued)

If the shelf	Do
has two power converters, and you powered up both converters	step 32
has two power converters, you powered up only one converter, and the mate converter is an NT2X06 or an NT2X07	step 31

31 Repeat step 25 for the second power converter on the shelf. Go to step 32.

32 Repeat steps 25 to 31 for the other shelf associated with the FSP card you replace. Go to step 33.

At the MAP terminal

33 To return to service the port on MS0 that connects to the network plane and pair, type

>RTS 0 PORT port_no

and press the Enter key.

where

port_no
is the port number that you recorded in step 13

Example of a MAP response:

```
Request to RTS MS: 0 shelf: 0 card:22 port:  1 submitted.
Request to RTS MS: 0 shelf: 0 card:22 port:  1 passed.
```

34 To return to service the port on MS1 that connects to the network plane and pair in use, type

>RTS 1 PORT port_no

and press the Enter key.

where

port_no
is the port number that you recorded in step 13

35 To access the NET level of the MAP display, type

>NET

and press the Enter key.

36 To return the network module to service, type

>RTS plane_no pair_no

and press the Enter key.

where

NT0X91
in a network equipment frame (end)

plane_no
is the number of the network plane (0 to 1)

pair_no
is the number of the network plane pair (0 to 31)

Example of a MAP response:

```
rts 0 0
Request submitted. Reply expected within 3 mins.
Test Passed
OK
```

If the RTS command	Do
passed	step 37
failed	step 40

37 The next action depends on the reason that you perform this procedure.

If a maintenance procedure	Do
directed you to this procedure	step 38
did not direct you to this procedure	step 41

38 Return to the maintenance procedure that directed you to this procedure and continue as directed.

39 To determine if you can manually busy the network plane and pair, contact operating company personnel or the next level of support. Continue as directed.

40 For additional help, contact the next level of support.

41 The procedure is complete.

NT0X91 in a trunk module equipment frame

Application

Use this procedure to replace an NT0X91 in a trunk module equipment (TME) frame, as listed in the following table.

PEC	Suffix	Card name	Shelf or frame name
NT0X91	AA, AB	Drive and alarm card	TME equipped with integrated service module (ISM), maintenance trunk module (MTM), office alarm unit (OAU), service trunk module (STM), or trunk module (TM)
NT0X91	AD	Drive and protection card	TME equipped with ISM, MTM, OAU, STM, or TM

If you cannot identify the product engineering code (PEC), PEC suffix, or shelf or frame for the card to replace, refer to the Index. The Index provides a list of cards, shelves, and frames in this card replacement book.

Note: This procedure does not cover card replacement for DCE frames equipped with digital carrier modules (DCM). A separate procedure covers FSP card replacement for digital carrier equipment (DCE) frames.

Common procedures

This procedure refers to *Loading a PM*.

Do not go to the common procedure unless the step-action procedure directs you.

Action

This procedure contains a summary flowchart and a list of steps. Use the flowchart to review the procedure. Follow the steps to perform the procedure.

NT0X91
in a trunk module equipment frame (continued)

Summary of replacing a NT0X91 in a trunk module equipment frame

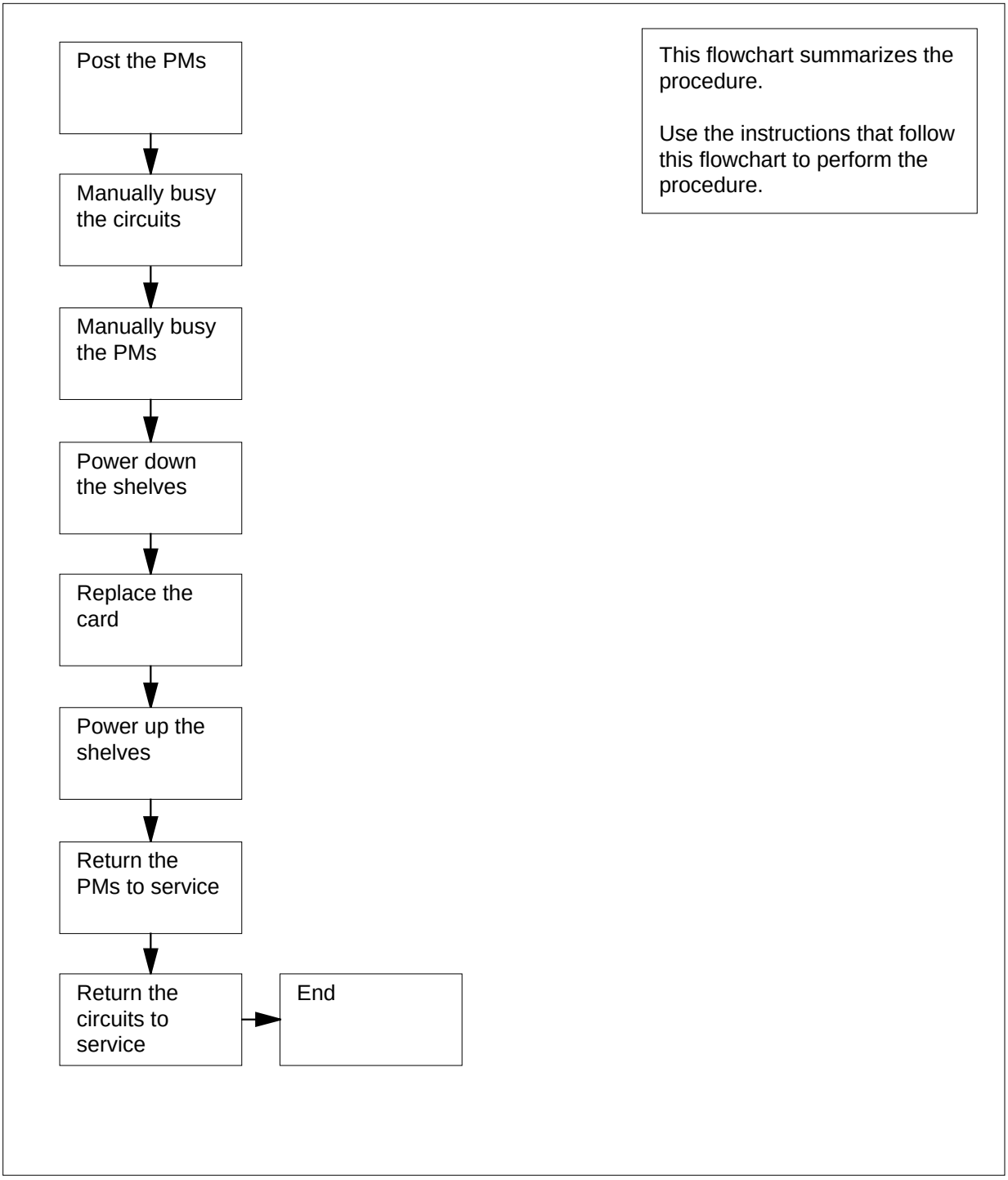

NT0X91
in a trunk module equipment frame (continued)

Replacing a NT0X91 in a trunk module equipment frame

At the frame

1

DANGER
Risk of electrocution
Some of the terminals inside the frame supervisory panel (FSP) have an electrical potential of -48 V dc. Make sure you remove all jewelry before you replace a card in the FSP. Do not touch any terminal in the FSP.

WARNING
Loss of service
This procedure removes an ISM, MTM, STM, or TM from service, which can cause service degradation. Perform this procedure only if you must restore out-of-service components. If you do not need to restore out-of-service components, perform this procedure during periods of low traffic. Do not perform this procedure if essential services use PM resources.

Obtain a replacement card. Make sure that the replacement card and the card you remove have the same PEC and PEC suffix.

2 Use the following table to identify the slot that contains the alarm and control card to replace:

NT0X91
in a trunk module equipment frame (continued)

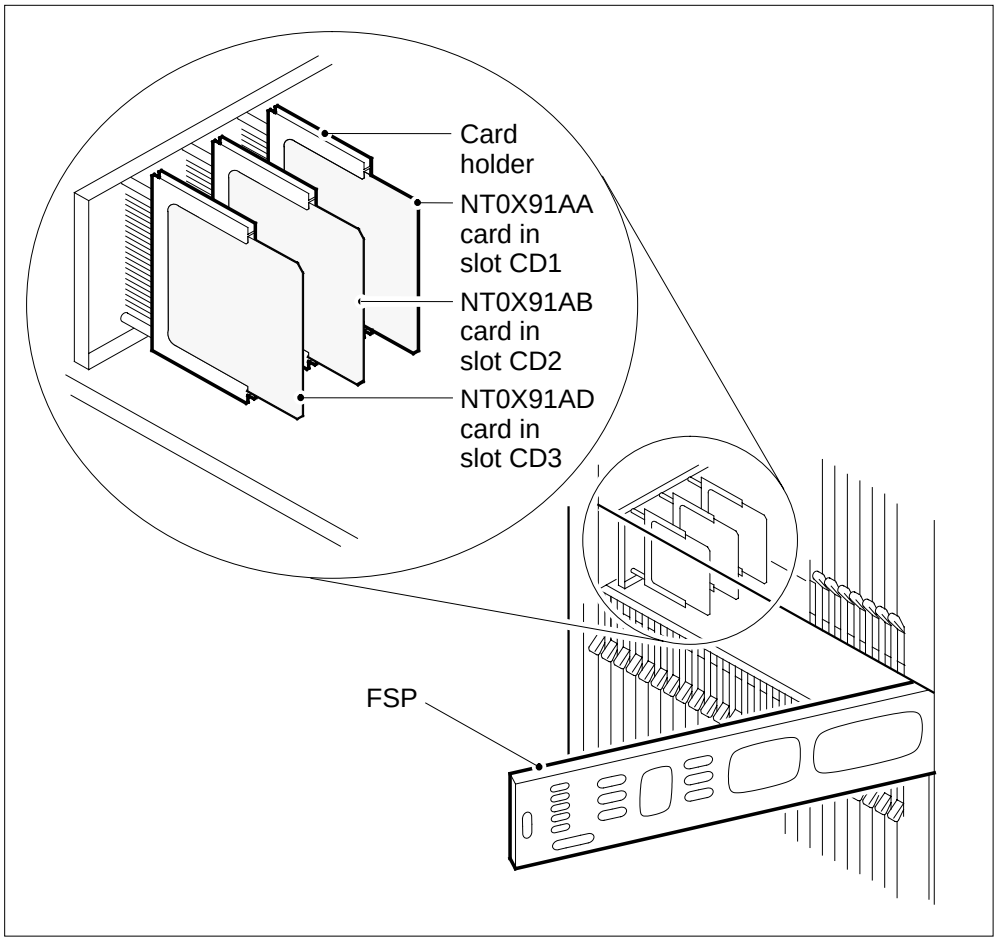

If Alarm and control card	Do Slot
NT0X91AA	CD1
NT0X91AB	CD2
NT0X91AD	CD3

NT0X91
in a trunk module equipment frame (continued)

3 Record information on FSP fuses, FSP circuit breakers (CB), and network shelf positions associated with the card you replace. Use the following table to obtain this information.

FSP card	FSP card position	FSP circuit breakers	Shelf position
NT0X91AA	CD1	CB5	04
NT0X91AB	CD2	CB3	32
		CB1	65
NT0X91AD	CD3	CB4	18
		CB2	51

Note 1: A minimum of one shelf can be unequipped.

Note 2: If the TME is equipped with the OAU, shelf positions 51 and 65 are used for the magnetic tape drive. Only shelf positions 04, 18, and 32 can be equipped with PMs. In this event, only one shelf associates with each FSP card.

4 Select a shelf associated with the FSP card you replace.

At the MAP terminal

5 To access the PM level of the MAP display, type

`>MAPCI;MTC;PM`

and press the Enter key.

Example of a MAP display:

```
                    SysB    ManB    OffL    CBsy    ISTb    InSv
PM                     1               6                     102
```

6 The next step depends on the type of PM that is in the shelf.

If the PM	Do
is an OAU	step 7
is an ISM, MTM, STM, or TM	step 11

7 To post the OAU, type

`>POST OAU pm_no`

and press the Enter key.

where

NT0X91
in a trunk module equipment frame (continued)

pm_no
is the number of the PM (0 to 9999)

Example of a MAP display:

```
                    SysB    ManB    OffL    CBsy    ISTb    InSv
PM                  1       0       6       0       0     102
OAU                 1       0       0       0       0

0OAU     0    SysB
```

8 Determine the state of the PM.

Note: The PM state appears on the right of the PM number. In the example display in step 7, the PM state is system busy (SysB).

If the PM	Do
is `Offl`	step 89
is `ManB`	step 36
is other than listed here	step 9

9 A maintenance flag (Mtce) can appear. This flag indicates that system-initiated maintenance tasks are in progress. Wait until the flag disappears from the status line before you proceed to the next step.

10 To manually busy the PM, type

>BSY

and press the Enter key.

Example of a MAP display:

```
                    SysB    ManB    OffL    CBsy    ISTb
   PM                 58       1       6      14      12
   OAU                 0       1       0       0       0

0OAU     0    ManB
bsy
OAU 0 Bsy
OK.
```

Go to step 36.

11 Verify from office records or operating company personnel that necessary services do not use the PM resources that this procedure affects.

Note: When you verify resources, include all PMs associated with the shelf. For all service and trunk modules, include NT1X80 cards and NT1X81 cards (single-card PMs) on the shelf. You must remove these single-card PMs from service to complete this procedure. If the shelf has an STM, check for necessary services on the STM on the other half of the

NT0X91
in a trunk module equipment frame (continued)

shelf. You must remove both STMs from service to complete this procedure.

If necessary services	Do
use PM resources and a minimum of one PM is in service	step 88
use PM resources and all PMs are out of service	step 12
do not use PM resources	step 12

12 To post the PM, type

>POST pm_type pm_no

and press the Enter key.

where

pm_type
is the type of PM (ISM, MTM, STM, TM)

pm_no
is the number of the PM (0 to 9999)

Example of a MAP display:

```
                    SysB    ManB    OffL    CBsy    ISTb    InSv
PM                     1       0       6       0       0     102
MTM                    1       0       0       0       0       9

MTM     0    SysB
```

13 Determine the state of the PM.

Note: The PM state appears on the right of the PM number. In the example display in step 12, the PM state is system busy (SysB).

If the PM	Do
is `Offl`	step 89
is other than listed here	step 14

14 To access the TTP level of the MAP display, type

>MAPCI;MTC;TRKS;TTP

and press the Enter key.

Example of a MAP display:

```
POST        DELQ            BUSYQ        DIG
TTP  6-013
CKT TYPE     PM NO.          COM LANG     STA S R  DOT TE  RESULT
```

NT0X91
in a trunk module equipment frame (continued)

15 To post the circuits for the PM, type

>POST P pm_type pm_no

and press the Enter key.

where

pm_type
is the type of PM (ISM, MTM, STM, TM)

pm_no
is the number of the PM (0 to 9999)

Example of a MAP display:

```
POST    17  DELQ            BUSYQ        DIG
TTP  6-013
CKT TYPE     PM NO.          COM LANG     STA S R  DOT TE  RESULT
CONF6    MTM    0  0   CF6P            0  IDL

post p MTM 0
LAST CKT = 17
SHORT CLLI IS: CF6P
OK,CKT POSTED
```

16 To manually busy all posted circuits, type

>BSY ALL

and press the Enter key.

Example of a MAP display:

```
POST    18  DELQ            BUSYQ  A  6  DIG
TTP  6-027
CKT TYPE     PM NO.          COM LANG     STA S R  DOT TE  RESULT

BSYQ ALL IDLE

bsy all
OK,POST SET IS SET IN BSYQ
```

17 Wait until all circuits are manually busy (removed from the busy queue) before you proceed to the next step.

Note: The digit on the right of the BUSYQ header indicates the number of circuits in use. As a circuit becomes available, the circuit is manually busy and the number in the queue decreases by one. A blank field indicates that all circuits are manually busy.

18 Determine if the shelf has the NT1X80 enhanced-digital recorded announcement machine (EDRAM) card or the NT1X81 conference card.

If the shelf	Do
has the NT1X80 or the NT1X81	step 19

NT0X91
in a trunk module equipment frame (continued)

If the shelf	Do
does not have the NT1X80 or the NT1X81	step 23

19 To post the circuits for the single-card PM, type

>POST P pm_type pm_no

and press the Enter key.

where

pm_type
is the type of single card PM (CTM, DTM)

pm_no
is the number of the PM (0 to 9999)

Note: The MAP display refers to the NT1X80 EDRAM card as a DTM. The MAP display refers to the NT1X81 conference card as a CTM. Both cards are single-card PMs.

20 To manually busy all posted circuits, type

>BSY ALL

and press the Enter key.

21 Wait until all circuits are manually busy (removed from the busy queue) before you proceed to the next step.

22 Repeat steps 19 to 21 for all NT1X80 and NT1X81 cards on the shelf.

23 To access the PM level of the MAP display, type

>PM

and press the Enter key.

24 To post the PM, type

>POST pm_type pm_no

and press the Enter key.

where

pm_type
is the type of PM (ISM, MTM, STM, TM)

pm_no
is the number of the PM (0 to 9999)

25 Determine the state of the PM.

If the PM	Do
is ManB	step 27
is other than listed here	step 26

NT0X91
in a trunk module equipment frame (continued)

26 To manually busy the PM, type

>BSY

and press the Enter key.

Example of a MAP display:

```
                    SysB    ManB    OffL    CBsy    ISTb    InSv
PM                    58       1       6      14      12      17
MTM                    0       1       0       0       0       9

MTM     0    ManB
bsy
MTM 0 Bsy
OK.
```

27 Determine if the shelf has the NT1X80 enhanced-digital recorded announcement machine (EDRAM) card or the NT1X81 conference card.

If the shelf	Do
has the NT1X80 or the NT1X81	step 28
does not have the NT1X80 or the NT1X81	step 32

28 To post the single-card PM, type

>POST pm_type pm_no

and press the Enter key.

where

pm_type
is the type of single card PM (CTM, DTM)

pm_no
is the number of the PM (0 to 9999)

29 Determine the state of the PM.

If the PM	Do
is ManB	step 35
is other than listed here	step 30

30 To manually busy the PM, type

>BSY

and press the Enter key.

31 Repeat steps 28 to 30 for all NT1X80 and NT1X81 cards on the shelf.

NT0X91
in a trunk module equipment frame (continued)

32 Determine if the shelf has a STM.

If the shelf	Do
has a STM, and only one STM is manually busy	step 33
has a STM, and both STMs are manually busy	step 34
has a STM	step 34

33

WARNING
Loss of service
When you power down a STM, the mate power converter in the other STM on the shelf trips. It is recommended to manually busy and turn off both STMs on a shelf.

Repeat steps 12 to 32 for the STM in the other half of the shelf.

34 The next action depends on how many shelves equipped with PMs associate with the FSP card you replace.

If	Do
one shelf equipped with PMs associates with the card	step 36
two shelves equipped with PMs associate with the card, and you turned down functionality for only one shelf	step 35
two shelves equipped with PMs associate with the card, and you turned down functionality for both shelves	step 36

35 Repeat steps 4 to 34 for PMs in the other shelf associated with the FSP card you replace. Go to step 36.

NT0X91
in a trunk module equipment frame (continued)

At the shelf

36

WARNING
Static electricity damage
Wear a wrist strap that connects to the wrist-strap grounding point to handle circuit cards. The wrist-strap grounding point is on a modular supervisory panel (MSP) or a frame supervisory panel (FSP). The wrist-strap protects the cards against static electricity damage.

Select a shelf to turn off.

37 Pull and set the POWER switch handle on the power converter down to the OFF position.

38 The next action depends on the type of PM in the shelf.

If the shelf	Do
has an STM (with or without DRAM)	step 39
has an MTM (with or without DRAM)	step 40
has an ISM (with or without DRAM)	step 41
is equipped as a TM	step 41

39 For the mate power converter in the STM on the other half of the shelf, set the POWER switch to the OFF position.

Go to step 41.

40 For the other power converter on the shelf, pull and set the POWER switch handle to the OFF position.

41 The next action depends on how many shelves equipped with PMs associate with the FSP card you replace.

If	Do
one shelf equipped with PMs associates with the card	step 43

NT0X91
in a trunk module equipment frame (continued)

If	Do
two shelves equipped with PMs associate with the card, and you powered down only one shelf	step 46
two shelves equipped with PMs associate with the card, and you powered down both shelves	step 43

42 Repeat steps 37 to 41 for PMs in the other shelf associated with the FSP card you replace. Go to step 43.

43 Unscrew the slotted nut on the left-hand side of the FSP.

44 Open the FSP.

45 Remove the card.

46 Insert the replacement alarm and control card.

47 Close the FSP.

48 Tighten the slotted nut on the FSP.

49 Select a shelf to power up.

50 The next action depends on the type of power converter and the type of supervisory panel.

If you	Do
replace an NT2X70AE card and the FSP or MSP has circuit breakers	step 51
replace an NT2X70AE card and the FSP or MSP does not have circuit breakers	step 52
are not replacing an NT2X70AE card and the FSP or MSP has circuit breakers	step 53
do not replace an NT2X70AE card and the FSP or MSP does not have circuit breakers	step 54

51 Power up the converter.

a Pull and set the POWER switch handle up to the RESET position and hold.

NT0X91
in a trunk module equipment frame (continued)

b Pull and set the converter circuit breaker handle on the FSP or MSP up until the handle clicks into place.

c Release the POWER switch handle.

Go to step 55.

52 Power up the converter.

a Pull and set the POWER switch handle up to the RESET position and hold until the CONVERTER FAIL LED goes off.

b Release the handle.

Go to step 55.

53 Power up the converter.

a Pull and set the POWER switch handle up to the ON position.

b Press and hold the RESET button on the power converter.

c Pull the handle of the converter circuit breaker on the FSP or MSP up until the handle clicks into place.

d Release the RESET button.

Go to step 55.

54 Power up the converter.

a Pull and set the POWER switch handle up to the ON position.

b Press and hold the RESET button on the power converter until the CONVERTER FAIL LED goes off.

c Release the RESET button.

55 Determine the type of PM in the shelf, and if you powered up both power converters.

If the shelf	Do
has an STM or an MTM (with or without DRAM) and you already powered up both power converters	step 60
has an STM (with or without DRAM)	step 56
has an MTM (with or without DRAM)	step 57
has an ISM (with or without DRAM)	step 60
is equipped as a TM	step 60

NT0X91
in a trunk module equipment frame (continued)

56 For the mate power converter in the STM on the other half of the shelf, repeat steps 50 to 55. Go to step 58.

57 For the other power converter on the shelf, repeat steps 50 to 55. Go to step 58.

58 The next action depends on how many shelves associate with the FSP card you replace.

If	Do
one shelf equipped with PMs associates with the card	step 60
two shelves equipped with PMs associate with the card, and you powered up only one shelf	step 59
two shelves equipped with PMs associate with the card, and you powered up both shelves	step 60

59 Repeat steps 50 to 58 for PMs in the other shelf associated with the FSP card you replace. Go to step 60.

At the MAP terminal

60 To access the PM level of the MAP display, type

```
>PM
```

and press the Enter key.

61 The next step depends on the type of PM that is in the shelf.

If the PM	Do
is an OAU	step 62
is an ISM, MTM, STM, or TM	step 66

62 To post the OAU, type

```
>POST  OAU  pm_no
```

and press the Enter key.

where

pm_no
is the number of the PM (0 to 9999)

63 To load the OAU, type

```
>LOADPM
```

and press the Enter key.

NT0X91
in a trunk module equipment frame (continued)

Example of a MAP response:

```
OAU 0 LoadPM  Passed
```

If the LOADPM command	Do
passed	step 65
failed	step 64

64 To load the PM, perform the procedure *Loading a PM* in this document. Complete the procedure and return to this point.

65 To return the PM to service, type

>RTS

and press the Enter key.

Example of a MAP response:

```
OAU 0 Rts Passed
```

If the RTS command	Do
passed	step 84
failed	step 91

66 To post the PM, type

>POST pm_type pm_no

and press the Enter key.

where

pm_type
is the type of PM (ISM, MTM, STM, TM)

pm_no
is the number of the PM (0 to 9999)

67 To load the PM, type

>LOADPM

and press the Enter key.

Example of a MAP response:

```
MTM 0 LoadPM  Passed
```

If the LOADPM command	Do
passed	step 69

NT0X91
in a trunk module equipment frame (continued)

If the LOADPM command	Do
failed	step 68

68 To load the PM, perform the procedure *Loading a PM* in this document. Complete the procedure and return to this point.

69 To return the PM to service, type

>RTS

and press the Enter key.

Example of a MAP response:

```
MTM 0 Rts Passed
```

If the RTS command	Do
passed, and the PM is `InSv`	step 71
passed, and the PM is `ISTb` with a card list generated	step 70
failed	step 91

70 Record the messages on the MAP display for future reference.

71 To access the TTP level of the MAP display, type

>TRKS;TTP

and press the Enter key.

72 To post the circuits for the PM, type

>POST TM pm_type pm_no

and press the Enter key.

where

pm_type
is the type of PM (ISM, MTM, STM, TM)

pm_no
is the number of the PM (0 to 9999)

73 To return all circuits to service, type

>RTS ALL

and press the Enter key.

Example of a MAP response:

```
RTS OK
```

NT0X91
in a trunk module equipment frame (continued)

74 The next action depends on the results of the PM RTS in step 69.

If the RTS command	Do
passed without problems	step 81
passed, but in-service tests failed and the system generated a card list	step 75

75 To manually busy all posted circuits, type

```
>BSY   ALL
```

and press the Enter key.

76 To return all circuits to service, type

```
>RTS   ALL
```

and press the Enter key.

77 To access the PM level of the MAP display, type

```
>PM
```

and press the Enter key.

78 To post the PM, type

```
>POST   pm_type   pm_no
```

and press the Enter key.

where

pm_type
is the type of PM (CTM, DTM, ISM, MTM, STM, TM)

pm_no
is the number of the PM (0 to 9999)

79 To perform an in-service test on the PM, type

```
>TST
```

and press the Enter key.

Example of a MAP response:

NT0X91
in a trunk module equipment frame (continued)

```
MTM     0    ISTb           TSTFAIL

InSvce Tests Initiated
MTM 0 Tst Failed
Site Flr RPos  Bay_id   Shf  Description    Slot     EqPEC
HOST  00  D06  TME  00   04  MTM : 000      04       2X59
HOST  00  D06  TME  00   04  MTM : 000      02       0X70
Following ISTb Exist :
Test Failed
```

If the TST command	Do
passed, and single-card PMs or an STM are out of service	step 81
passed, and you worked on all PMs on the shelf and you returned all PMs to service	step 84
passed, and you worked on all PMs on the shelf, not all PMs returned to service	step 91
failed, and single-card PMs or an STM that you did not work on that you must return to service	step 80
failed, and you worked on all PMs on the shelf	step 91

80 Record the messages on the MAP display for future reference.

81 To access the PM level of the MAP display, type

>PM

and press the Enter key.

82 To post the PM, type

>POST pm_type pm_no

and press the Enter key.

where

pm_type
is the type of PM (ISM, MTM, STM, TM)

pm_no
is the number of the PM (0 to 9999)

83 Repeat steps 66 to 79 for all PMs on this shelf. Go to step 84.

NT0X91
in a trunk module equipment frame (end)

84 Determine how many shelves associate with the FSP card you replace.

If	Do
one shelf equipped with PMs associates with the card	step 86
two shelves equipped with PMs associate with the card, and you returned to service the PM on only one shelf	step 85
two shelves equipped with PMs associate with the card, and you returned to service the PM on both shelves	step 86

85 Repeat steps 61 to 84 for PMs in the other shelf associated with the FSP card you replace. Go to step 86.

86 Determine if the maintenance procedure directed you to this procedure.

If a maintenance procedure	Do
directed you to this procedure	step 87
did not direct you to this procedure	step 92

87 Return to the maintenance procedure that sent you to this procedure and continue as directed.

88 Contact the next level of support to determine how to handle necessary services. Continue as directed.

89 Contact operating company personnel to determine why the component is offline. Continue as directed.

90 Report the results of the maintenance activity to the next level of support.

91 For additional help, contact the next level of support.

92 The procedure is complete.

NT6X36
in LCE-type frames and CLCE

Application

Use this procedure to replace the following cards in the shelves or frames listed.

PEC	Suffix	Card name	Shelf or frame name
NT6X36	AA, AB	FSP alarm card	line concentrating equipment (LCE) frame
NT6X36	AA, EA	FSP alarm card	enhanced line concentrating equipment (LCEI) frame
NT6x36	AA, AB	FSP alarm card	cabinetized line concentrating equipment (CLCE), PEC NTRX30AA

Refer to the “Index" if you cannot identify the following features for the card you want to replace:

- product engineering code (PEC)
- PEC suffix
- provisioned shelf
- provisioned frame

The “Index" contains a list of the cards, shelves, and frames documented in this card replacement book.

Common procedures

There are no common procedures.

Action

This procedure contains a summary flowchart and a list of steps. Use the flowchart to review the procedure. Follow the steps to perform the procedure.

NT6X36
in LCE-type frames and CLCE (continued)

Summary of replacing a NT6X36 in LCE-type frames and CLCE

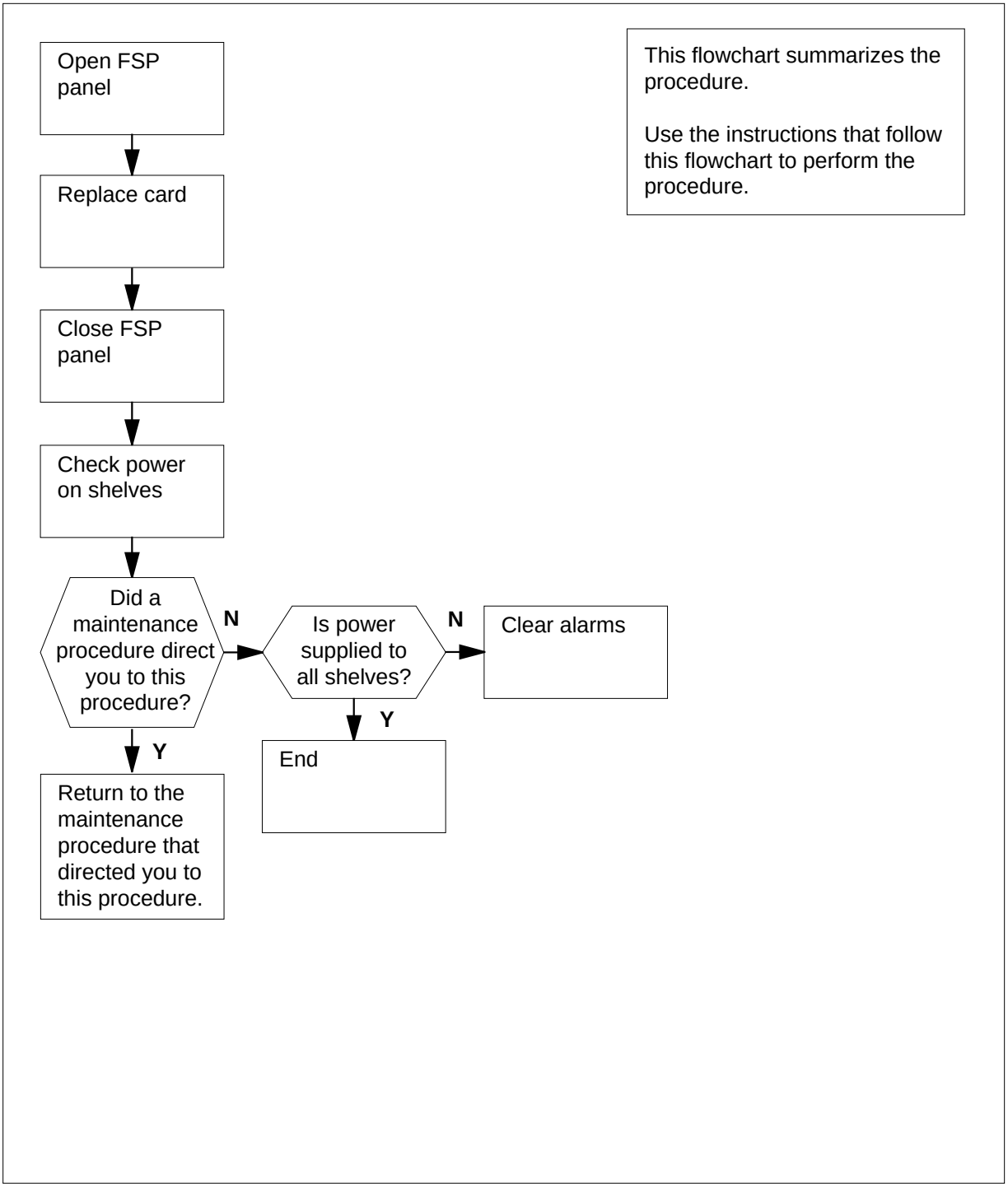

NT6X36
in LCE-type frames and CLCE (continued)

Replacing a NT6X36 in LCE-type frames and CLCE

At your current location

1

DANGER
Risk of electrocution
Some of the terminals inside the frame supervisory panel (FSP) have an electrical potential of -48 V dc. Make sure you remove all jewelry before you replace a card in the FSP. Do not touch any terminal inside the FSP.

Obtain a replacement card. Make sure the replacement card and the card you replace have the same PEC and PEC suffix.

At the frame

2

WARNING
Static electricity damage
Wear a wrist strap that connects to the wrist-strap grounding point to handle circuit cards. The wrist-strap grounding is on a modular supervisory panel (MSP) or a frame supervisory panel (FSP). The wrist-strap protects the cards against static electricity damage.

Unscrew the slotted nut on the left of the FSP.

Frame supervisory panel

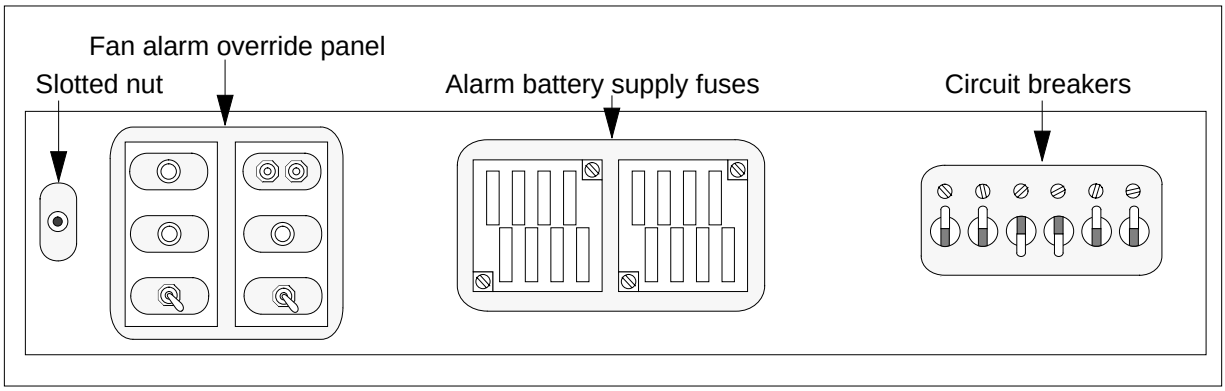

3 Open the FSP.

4 Remove the card.

NT6X36
in LCE-type frames and CLCE (continued)

Frame supervisory panel alarm and control cards

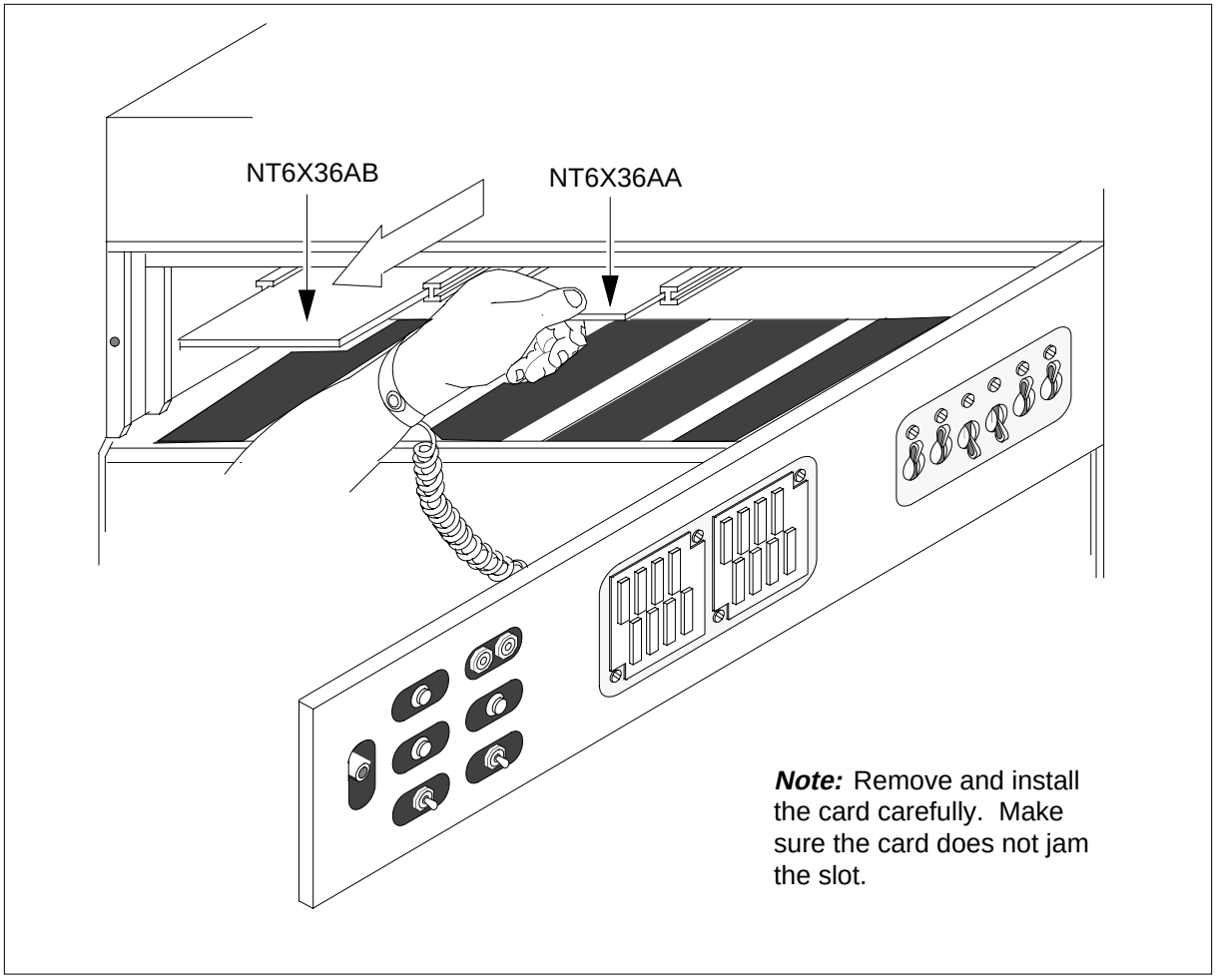

5 Insert the replacement alarm and control card.

6 Close the FSP.

7 Tighten the slotted nut on the FSP.

8 The next action depends on why you perform this procedure.

If	Do
a maintenance procedure directed you to this procedure	step 9
a maintenance procedure did not direct you to this procedure	step 10

9 Return to the maintenance procedure that directed you to this procedure and continue as directed.

NT6X36
in LCE-type frames and CLCE (end)

10 Check the CONVERTER FAIL LEDs on each power converter for each shelf.

If	Do
the LED is lit for any power converter	step 11
the LED is not lit for each power converter	step 12

11 To clear alarms, go to *Alarm clearing and performance monitoring*. Do not return to this procedure.

12 The procedure is complete.

NTRX41
in MSP in streamline B cabinets

Application

Use this procedure to replace the following cards in a modular supervisory panel (MSP). The following table lists the cards.

PEC	Suffix	Card name	Shelf or frame name
NTRX41	AA	Alarm module	Cabinetized two-shelf network (CDSN)
NTRX41	AA	Alarm module	Cabinetized input-output equipment (CIOE)
NTRX41	AA	Alarm module	Cabinetized international peripheral equipment (CIPE)
NTRX41	AA	Alarm module	Cabinetized miscellaneous equipment (CMIS)
NTRX41	AA	Alarm module	Cabinetized trunk module equipment (CTME)
NTRX41	AA	Alarm module	Cabinetized digital trunk controller offshore (CDTO)
NTRX41	AA	Alarm module	Cabinetized line group controller offshore (CLGO)
NTRX41	AA	Alarm module	Cabinetized message switch 7 (CMS7)

Refer to the “Index" if you cannot identify the following features for the card you want to replace:

- product engineering code (PEC)
- PEC suffix
- provisioned shelf
- provisioned frame

The “Index" contains a list of the cards, shelves, and frames documented in this card replacement NTP.

NTRX41
in MSP in streamline B cabinets (continued)

Common procedures

There are no common procedures.

NTRX41
in MSP in streamline B cabinets (continued)

Summary of replacing a NTRX41 in MSP in streamline B cabinets

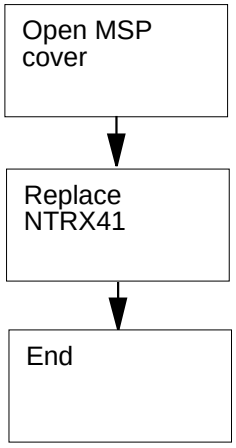

This flowchart summarizes the procedure.

Use the instructions that follow this flowchart to perform the procedure.

NTRX41
in MSP in streamline B cabinets (continued)

Replacing a NTRX41 in MSP in streamline B cabinets

At your current location

1 Obtain a replacement module. Make sure that the replacement module and the module you remove have the same PEC and PEC suffix.

At the front of the MSP

2 To open the front cover of the MSP, pull out at the finger holes provided. Swing the cover down to the open position.

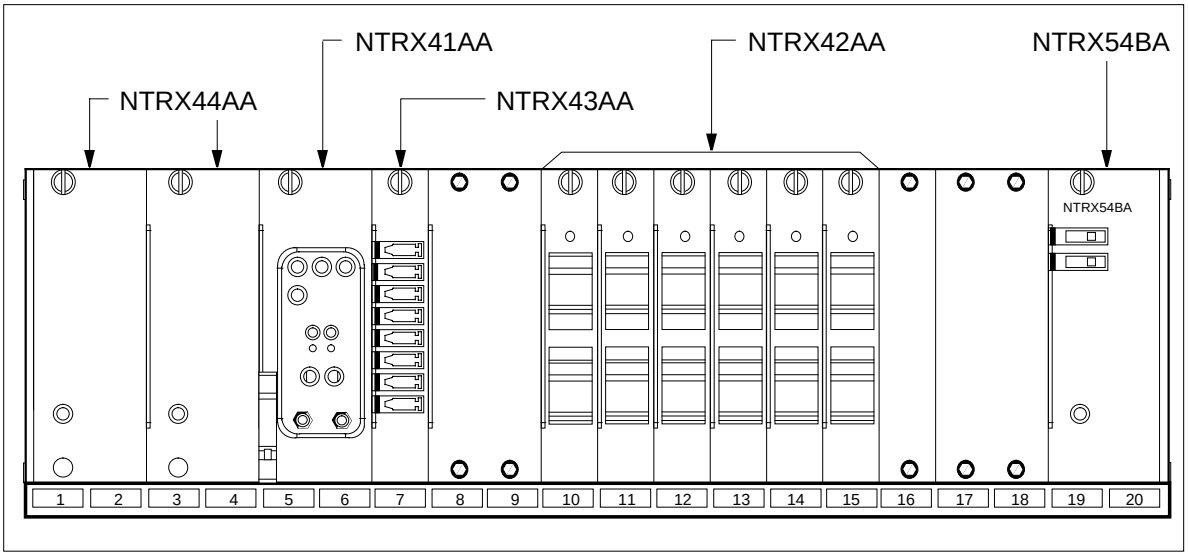

3

WARNING
Static electricity damage
Wear a wrist strap that connects to the wrist-strap grounding point of a frame supervisory panel (FSP) to handle modules. The wrist strap protects the modules against static electricity damage.

DANGER
Risk of injury from high energy levels, equipment damage
When you remove or insert a module, do not apply direct pressure to module components. Make sure you do not force a module into a slot.

Put on a wrist strap.

NTRX41
in MSP in streamline B cabinets (continued)

At the front of the MSP

4 Remove the NTRX41 (alarm module) as follows:

a Locate the module.

Note: The NTRX41 is in slots 5 and 6.

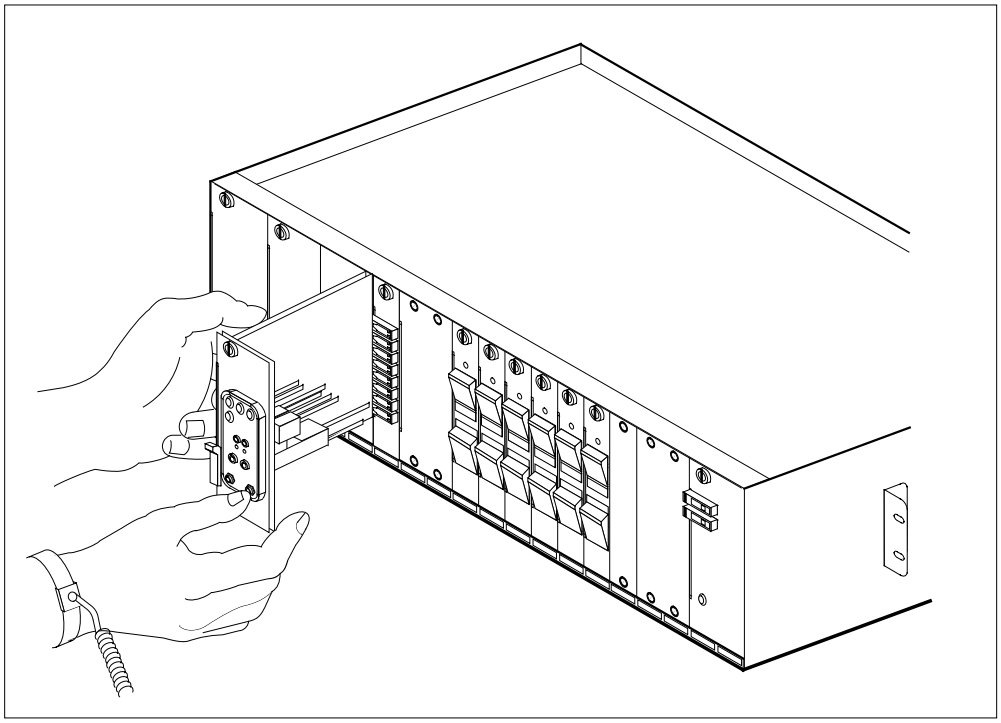

b Disengage (loosen) the captive screw at the top of the module.

c Pull down (open) the locking lever on the lower left corner of the module.

d Carefully pull the module toward you until the module clears the shelf.

5 Make sure the replacement module and the module you removed have the same PEC and PEC suffix.

6 Insert the replacement module as follows:

a Open the locking lever on the replacement module.

b Align the module with the slots in the shelf and carefully slide the module into the shelf.

c Use your fingers or thumbs to push on the upper and lower edges of the faceplate. Make sure the module sits completely in the shelf.

d Close the locking lever.

NTRX41
in MSP in streamline B cabinets (end)

e Tighten the captive screw at the top of the module.

If the MSP alarm LED	Do
remains off	step 8
turns on	step 7

7 For additional help, contact the next level of support.

8 The procedure is complete.

9 Input/output device card replacement procedures

Introduction

This chapter contains card replacement procedures for the input/output device (IOD). The first section in the chapter provides illustrations that show shelf layouts.

Card replacement procedures for the frame supervisory panel (FSP) and modular supervisory panel (MSP) are in the chapter “Frame supervisory panel and maintenance supervisory panel card replacement procedures".

Each procedure contains the following sections:

- Application
- Common procedures
- Action

Application

This section identifies the IOD card(s) that the replacement procedure covers.

Common procedures

This section lists common procedures for the IOD card replacement procedure. A common procedure is a series of steps you repeat within maintenance procedures. The procedure for the removal and replacement of a card is a common procedure. Common procedures are in the common procedures chapter in this NTP.

Do not go to the common procedures unless the step-action procedure directs you to go.

Action

This procedure contains a summary flow chart and a list of steps. Use the flowchart to review the procedure. Follow the steps to perform the procedure.

Recording card replacement activities

When you replace a card, record the following information in office records:

- the serial number of the card you replaced
- the date you replaced the card
- the reason you replaced the card

IOD shelf layouts

Application

This module contains a frame layout diagram for the input/output equipment (IOE) frame. The module contains a cabinetized layout diagram for the integrated services cabinet (CISM). The module contains shelf layouts for the following:

- input/output controller (IOC) shelf
- single disk drive unit (DDU) shelf
- two DDU shelf
- input/output module (IOM) housed in a integrated services module (ISM) shelf

Note: The frame and shelf layouts on the following pages are standard. Differences in the shelves in your office can be present.

IOD shelf layouts (continued)

Figure Input/output equipment frame

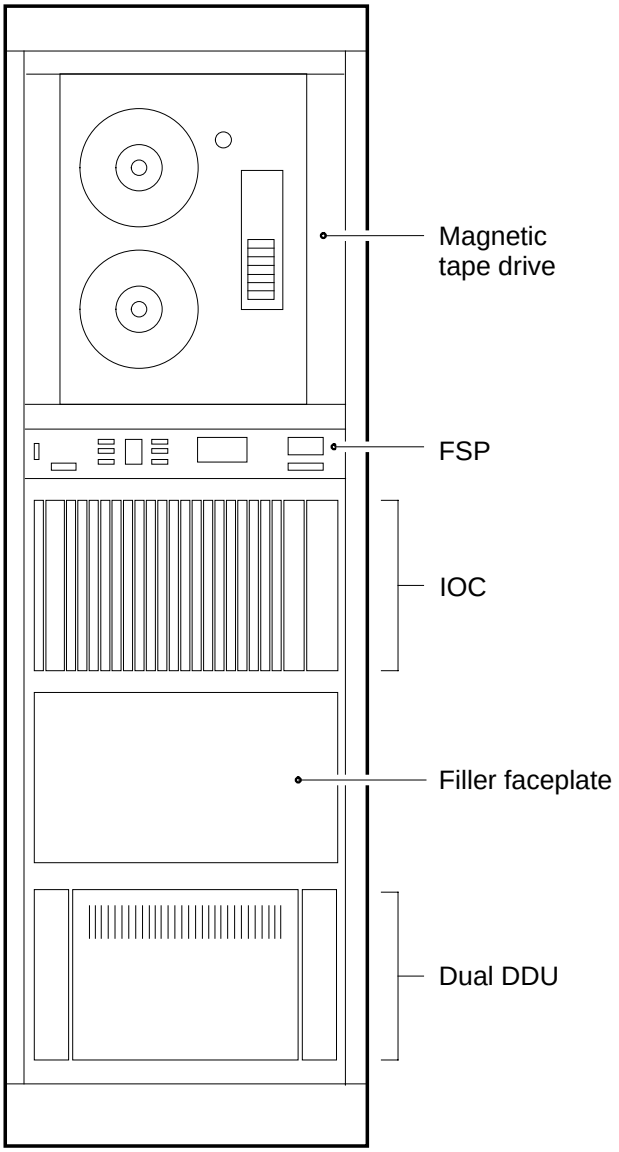

Legend:

DDU	Disk drive unit
FSP	Frame supervisory panel
IOC	I/O controller

IOD shelf layouts (continued)

Figure Input/output controller shelf

Cards

NT2X70	Power coverter card	25F
NT0X50	Filler faceplate	23F
NT0X67	Bus terminator card	22F
NT0X50	Filler faceplate	21F
NT1X67	Terminal controller card	20F
NT0X50	Filler faceplate	19F
NT1X67	Terminal controller card	18F
NT0X50	Filler faceplate	17F
NT1X67	Terminal controller card	16F
NT0X50	Filler faceplate	15F
NT1X67	Terminal controller card	14F
NT0X50	Filler faceplate	13F
NT1X67	Terminal controller card	12F
NT0X50	Filler faceplate	11F
NT1X89	Multiprotocol controller card	10F
NT0X50	Filler faceplate	09F
NT1X67	Terminal controller card	08F
NT0X50	Filler faceplate	07F
NT1X68	Magnetic tape drive controller card	06F
NT0X50	Filler faceplate	05F
NT1X55	Disk drive unit controller card	04F
NT1X62	IOC message processor card	02F
NT0X50	Filler faceplate	01F

Rear *Front*

Note: The NT1X67 terminal controller card can function as a Datalink controller card, DATAPAC controller card, or SMDI controller card.

IOD shelf layouts (continued)

Figure Single disk drive unit shelf

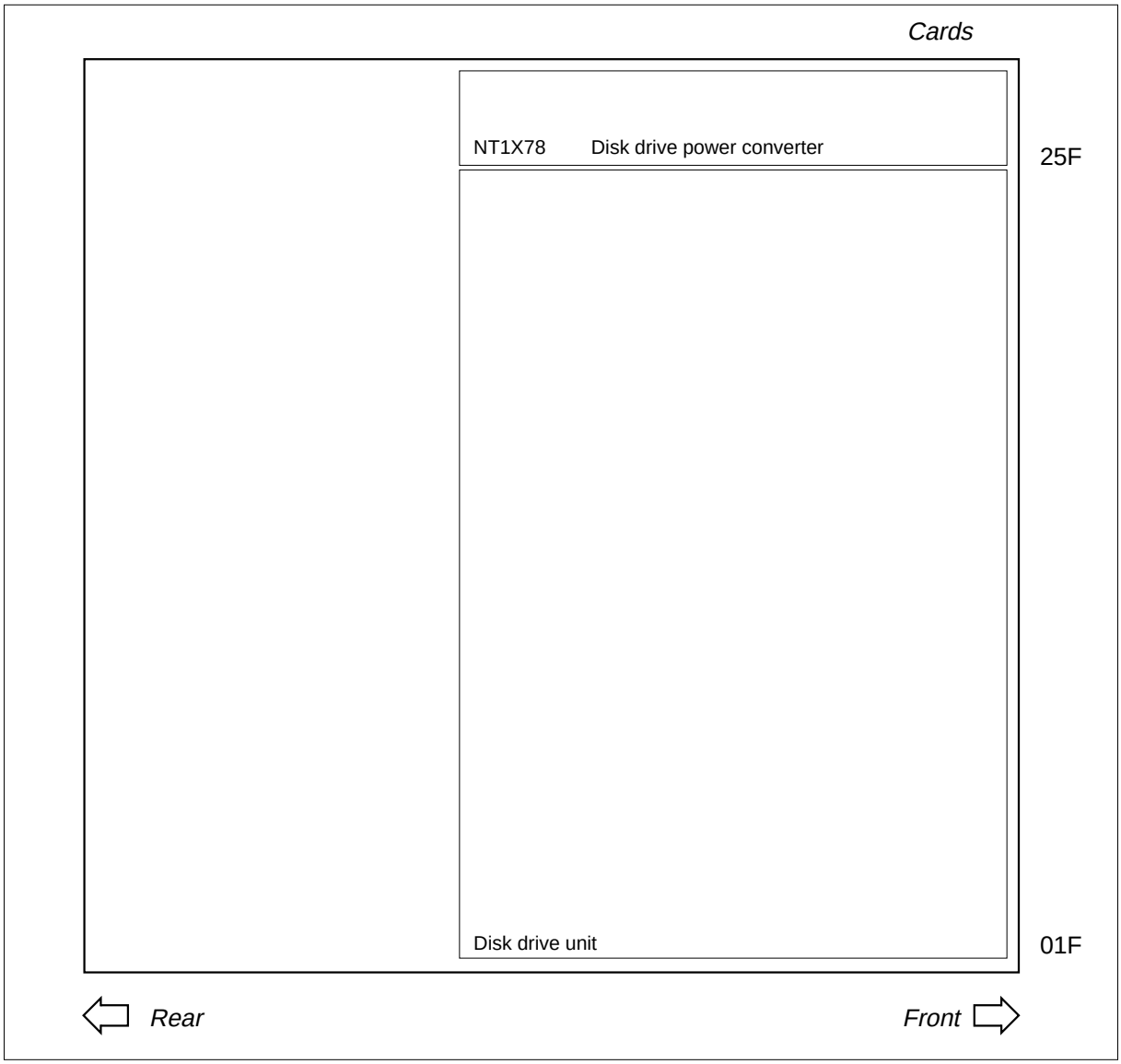

Note: A faceplate covers the DDU. The drive is an 8 in. (20.3 cm) model 8211D-19 drive, a 5.25 in. (13.3 cm) model Seagate ST4883E or model Maxtor XT4380E drive.

IOD shelf layouts (continued)

Figure Two disk drive unit shelf

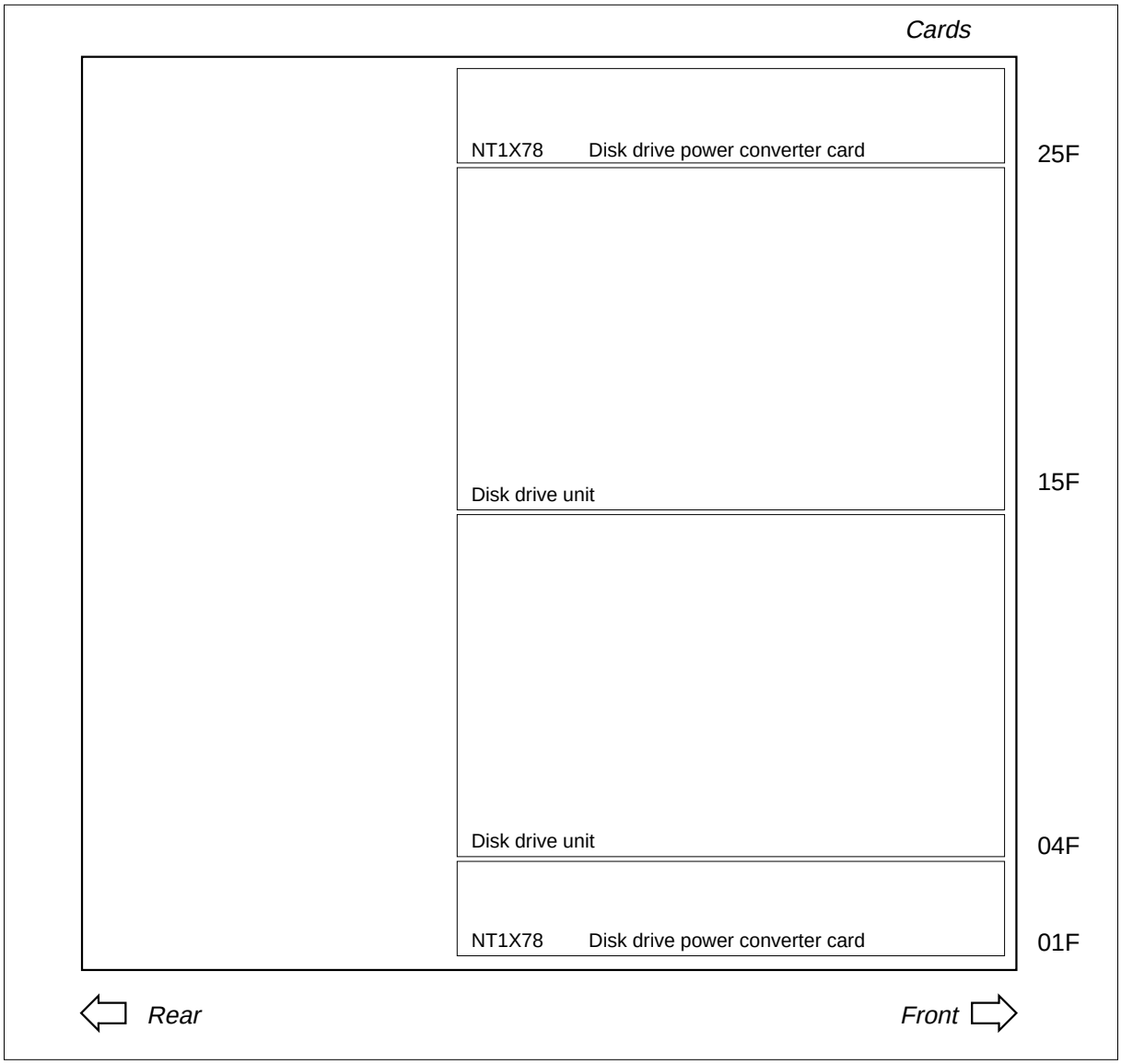

Note: A faceplate covers the DDUs. The drives are 8 in. (20.3 cm) model 8211D-19 drive, 5.25 in. (13.3 cm) model Seagate ST4883E or model Maxtor XT4380E drive.

IOD shelf layouts (continued)

Figure Integrated services cabinet (CISM)

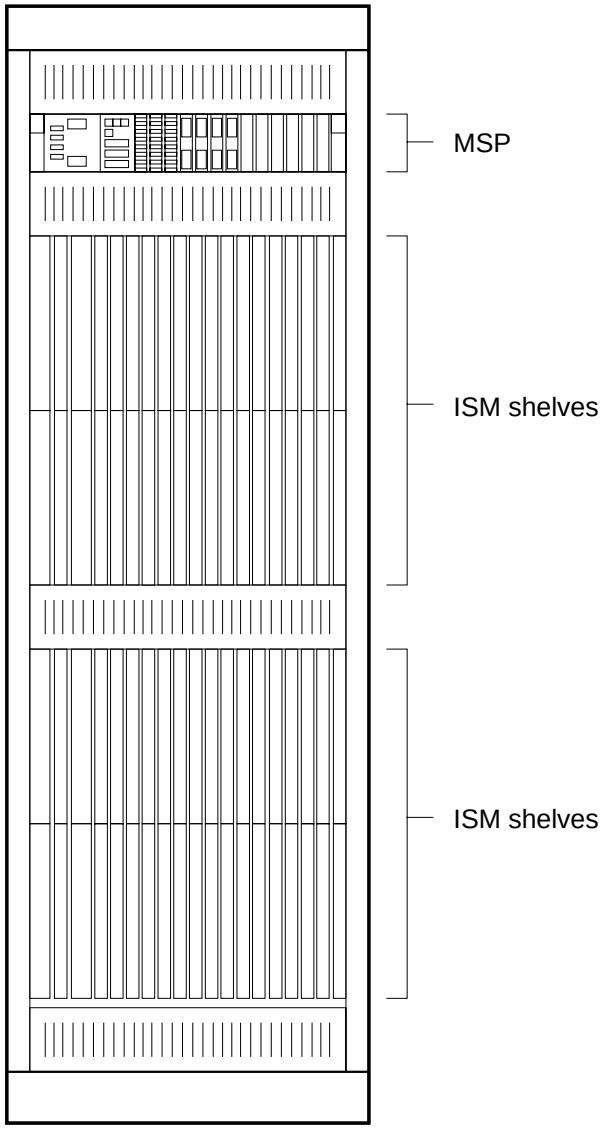

IOD shelf layouts (end)

Figure Integrated services module shelf

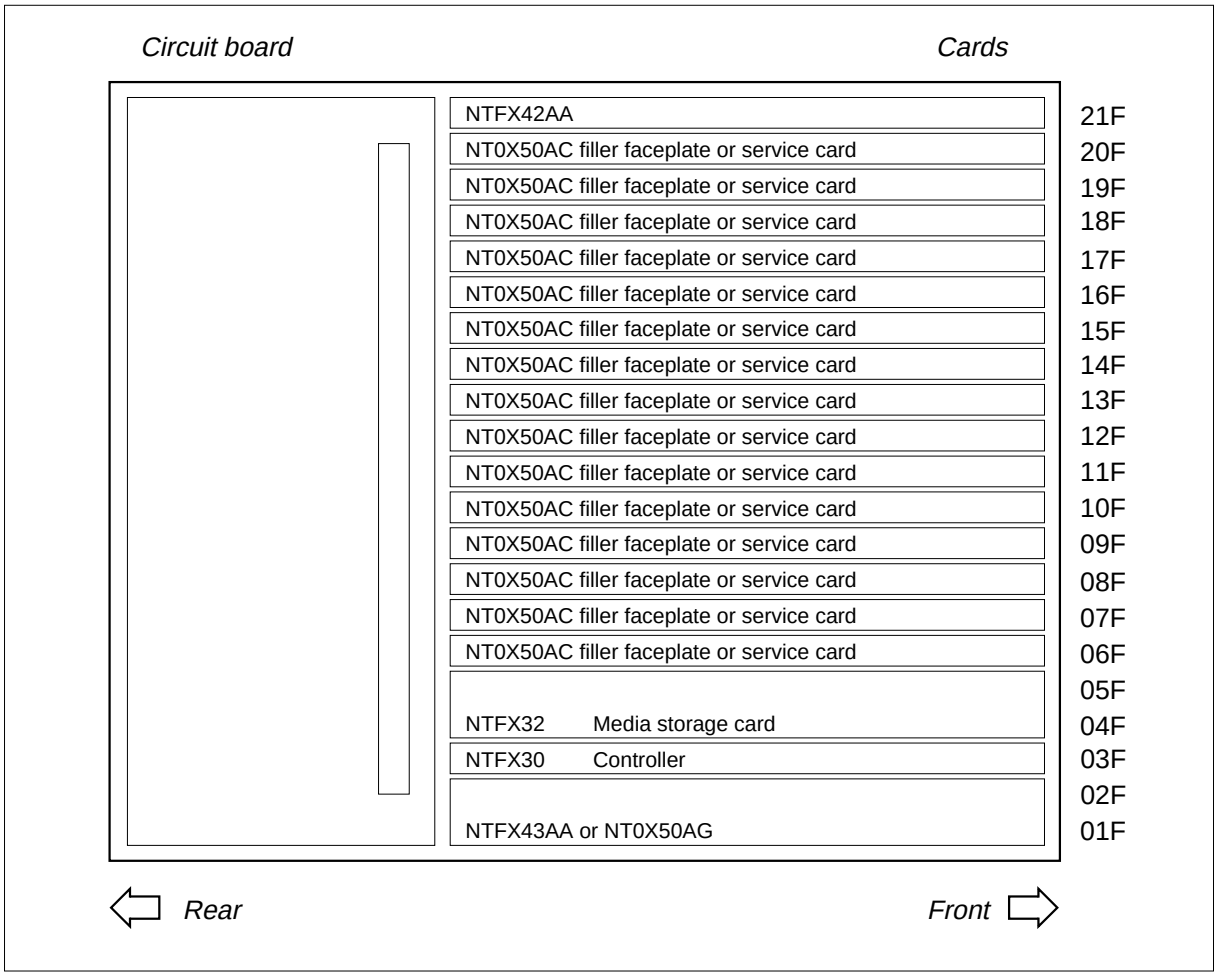

Disk drive and magnetic tape controller cards in an IOC

Application

Use this procedure to replace the following cards in an input/output controller (IOC).

PEC	Suffix	Card name	Shelf or frame name
NT1X55	AA, AB, BA, CA, DA	Disk drive controller card	IOC
NT1X55	FA	SCSI disk drive unit	IOC
NT1X68	AA, AB, AC, BB, BC, BD	Magnetic tape interface card	IOC

Refer to the “Index" if you cannot identify the following features for the card you want to replace:

- product engineering code (PEC)
- PEC suffix
- provisioned shelf
- provisioned frame

The “Index" contains a list of the cards, shelves, and frames documented in this card replacement book.

Note: If the IOC shelf contains a minimum of one NT1X55FA disk drive unit (DDU), the shelf must not contain the following power converter cards:

- NT2X70AA
- NT2X70AB
- NT2X70AC

If the IOC contains these cards, a loss of service on the DDUs can occur and a loss of data results. Contact the operating company personnel responsible for the next level of support.

Common procedures

Refer to *Replacing a card* in this document.

Disk drive and magnetic tape controller cards in an IOC (continued)

Do not go to the common procedure unless the step-action procedure directs you to go.

Action

This procedure contains a summary flowchart and a list of steps. Use the flowchart to review the procedure. Follow the steps to perform the procedure.

Disk drive and magnetic tape controller cards in an IOC (continued)

Summary of replacing Disk drive and magnetic tape controller cards in an IOC

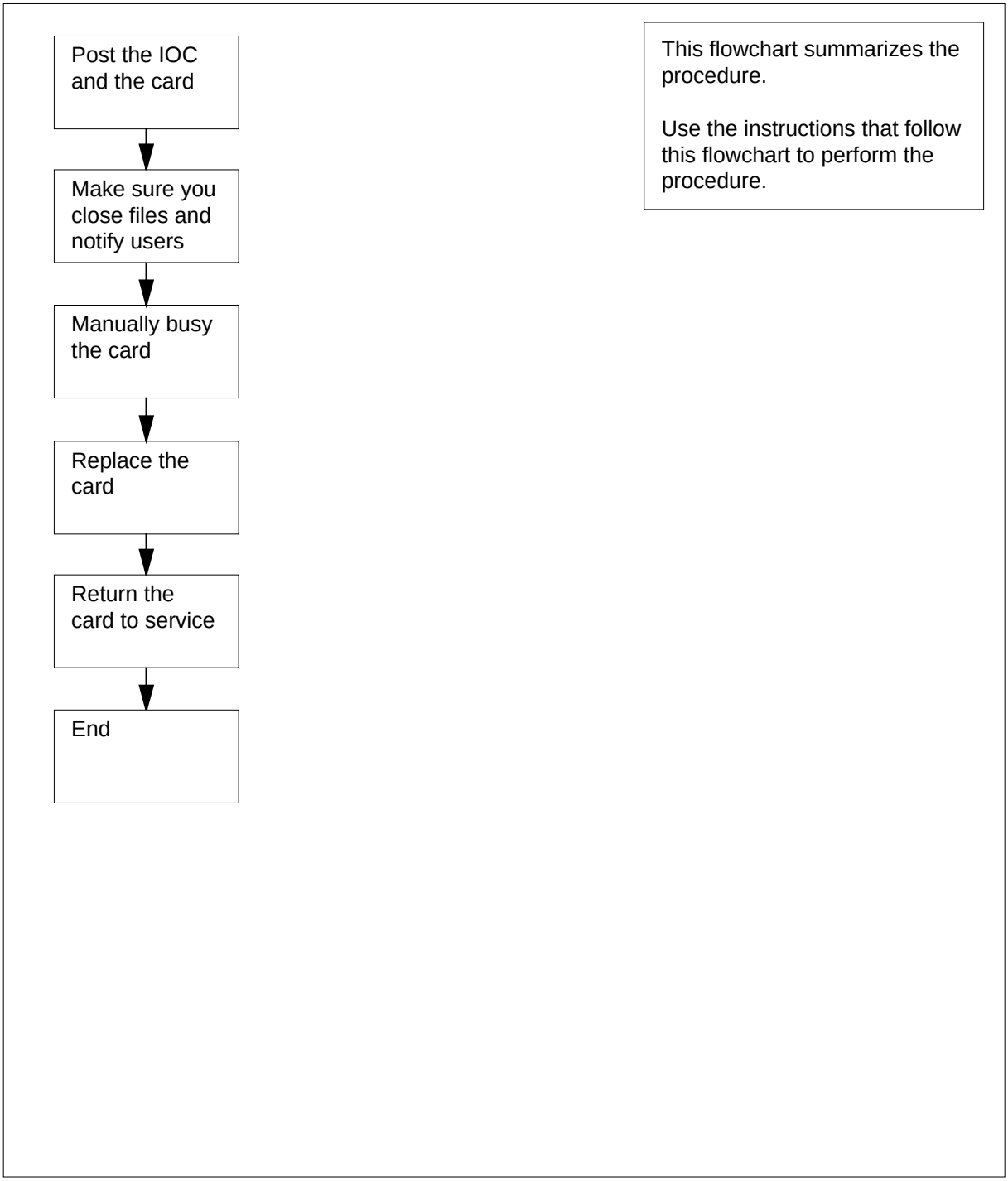

Disk drive and magnetic tape controller cards in an IOC (continued)

Replacing Disk drive and magnetic tape controller cards in an IOC

At the MAP terminal

1

> **WARNING**
> **Loss of billing data**
> This procedure instructs you to remove disk and tape drive device controllers from service. The active automatic message accounting (AMA) file can be on the IOC that contains the card you will replace. Make sure you close all files before you manually busy the controller.

Get a replacement card. Make sure that the replacement card and the card you remove have the same PEC and PEC suffix.

2 To access the IOD level of the MAP display, type

>MAPCI;MTC;IOD

and press the Enter key.

3 To post the IOC that associates with the card you are replacing, type

>IOC ioc_no

and press the Enter key.

where

ioc_no
is the IOC identification number (0 to 19)

Example of a MAP response:

```
 IOD
IOC  0  1  2  3
STAT .  .  .  .
DIRP: AMA  B XFER:   .       SLM : SLMbsy NOP :   .    NX25:   .
MLP :   .    DPPP:   .       DPPU:   .    SCAI:   .

IOC   CARD    0     1     2     3   4     5     6     7     8
 0    PORT  0123  0123  0123  01230123  0123  0123  0123  0123
     STAT  .---  .---  .... .---  ....  ----  ..--  .---  ----
     TYPE  MTD   DDU    CONS  MPC   CONS        CONS  MPC
```

4 To post the card, type

>CARD card_no

and press the Enter key.

where

Disk drive and magnetic tape controller cards in an IOC (continued)

card_no
is the card identification number (0 to 8)

Example of a MAP response:

```
IOD
IOC  0  1  2  3
STAT .  .  .  .

DIRP: AMA  B XFER:   .       SLM : SLMbsy NOP :   .    NX25:   .
MLP :   .    DPPP:   .       DPPU:   .    SCAI:   .

IOC   CARD    0     1     2     3  4     5     6     7     8
 0    PORT  0123  0123  0123  0120123  0123  0123  0123  0123
     STAT  .---  .---  .......---  ....  ----  ..--  .---  ----
     TYPE  MTD   DDU   CONS  MPC   CONS        CONS  MPC

Card 0   MTD           0
        TapeName
        Status     Idle
         User
```

5 The next action depends on the card you replace.

If the card you replace	Do
is NT1X55	step 6
is NT1X68	step 10

6 Determine the state of the NT1X55 controller card.

If the card	Do
is `ManB`	step 9
is `Offl`	step 39
is other than listed here	step 7

7 To determine if files are open on the DDU, type

`>ALLOC`

and press the Enter key.

Example of a MAP response:

Disk drive and magnetic tape controller cards in an IOC (continued)

```
VOLID  VOL_NAME  SERIAL_NO  BLOCKS  ADDR  TYPE  R/O  FILES_OPEN
   0    IMAGE        2800     45000  D000    0   NO        0
   1    XPMLOADS     2801     35000  D000    0   NO        0
   2    RTMLOADS     2802     20000  D000    0   NO        0
      .
      .
       .
   7    SMDR         2807     5000  D000    0   NO        0
   8    AMA1         2808     5000  D000    0   NO        0
   9    TST          2809       50  D000    0   NO        0
  10    AMA2         280A         50D000    0   NO        0
```

Note: If you replace an NT1X55FA, record the name and number of each disk volume.

If files	Do
are open	step 31
are not open	step 8

8 To manually busy the controller, type

>BSY

and press the Enter key.

9 To offline the NT1X55 card, type

>OFFL

and press the Enter key.

Go to step 13.

10 Determine the state of the NT1X68 controller card.

If the card	Do
is `ManB`	step 13
is `Offl`	step 39
is other than listed here	step 11

11 Notify all users that the system will interrupt service for the device. Wait until all users cease to access the device before you proceed to the next step.

12 To manually busy the controller, type

>BSY

and press the Enter key.

Disk drive and magnetic tape controller cards in an IOC (continued)

At the shelf

13

> **WARNING**
> **Static electricity damage**
> Wear a wrist strap that connects to the wrist-strap grounding point to handle circuit cards. The wrist-strap grounding point is on a frame supervisory panel (FSP) or a modular supervisory panel (MSP). The wrist strap protects the cards against static electricity damage.

To replace the card, use the procedure *Replacing a card* in this document. Complete the procedure and return to this point.

Note 1: Make sure the handle of the PWR switch on the replacement power converter is in the OFF position.

Note 2: Determine if the card you will replace has switches. Make sure the switches for the replacement card and the card you will replace have the same settings.

14 The next action depends on the type of card you replace.

If the card you replace	Do
is NT1X55FA	step 15
is other than listed here	step 26

At the MAP terminal

15 To start the disk drive motor, type

>START

and press the Enter key.

MAP response:

```
Disk Start Successful
```

16 To test the disk drive, type

>TST

and press the Enter key.

Example of a MAP display:

Disk drive and magnetic tape controller cards in an IOC (continued)

```
Card 8  Unit    0
        User    SYSTEM  Drive_State
        Status  BSY     spinning
```

If the TST command	Do
passed	step 17
failed	step 40

17 To perform the volume allocation tests, perform the procedure *Allocating test volumes on 8-in., 5.25-in., or 2.5-in. DDUs* in *Routine Maintenance Procedures*. Complete the procedure and return to this point.

18 To perform interference and file transfer tests, perform the procedure *Performing DDU interference and file transfer tests.* This document is in *Routine Maintenance Procedures*. Complete the procedure and return to this point.

19 To access the CI level of the MAP display, type

>QUIT ALL

and press the Enter key.

20 To access the allocation utility, type

>ALLOC ddu_no

and press the Enter key.

where

ddu_no
is the DDU number (0 to 9)

21 To confirm the command, type

>YES

and press the Enter key.

22 To add a volume to the disk, type

>ADD vol_name vol_size

and press the Enter key.

Note: You recorded the names and sizes of the required disk volumes in step 7.

where

vol_name
is the volume name you recorded in step 7

vol_size
is the volume size you recorded in step 7

23 Repeat step 22 for each of the disk volumes that remain.

Disk drive and magnetic tape controller cards in an IOC (continued)

24 To enforce the allocation of the volumes, type

>UPDATE

and press the Enter key.

Example of a MAP response:

```
WARNING:  A break HX of this process may cause
          severe corruption on the disk that may
          require it to be reformatted.
Writing label of Volume IMAGE
Successful
Starting Initialization of Volume IMAGE
A break HX of this process may cause severe corruption
on this volume that may require reinitialization of all
non initialized volumes.
Number of Bad Blocks = 0
Successful
Update Done
```

25 To quit the allocation utility, type

>QUIT

and press the Enter key.

26 To manually busy the card, type

>BSY

and press the Enter key.

27 To test the card, type

>TST

and press the Enter key.

28 To return the card to service, type

>RTS

and press the Enter key.

Note: If an NT1X55 is in use, the RTS command requires 75 s to complete.

If the RTS command	Do
passed	step 29
failed	step 40

Disk drive and magnetic tape controller cards in an IOC (continued)

29 The next action depends on why you perform this procedure.

If a maintenance procedure	Do
directed you to this procedure	step 30
did not direct you to this procedure	step 41

30 Return to the maintenance procedure that directed you to this procedure. Continue as directed by the maintenance procedure.

31

> **WARNING**
> **Loss of data**
> If files are open do not busy the controller. If you busy the controller while files are open, billing data will be lost. For additional help, contact the next level of support.

If device independent recording package (DIRP) volumes are open, the following events occur:

- the DDU drops SysB
- billing data is lost
- open Logutil files are lost or corrupted

Before starting card replacement procedures, close the DIRP volumes. Close files from DIRP and demount active volumes from the DDU. Use the procedure, “Deallocating Recording Volumes in the DIRP Utility" in *Routine Maintenance Procedures*.

32 Stop files recording to and from the Logutil. Type the following command at the Logutil command level:

`>LOGUTIL;LISTDEVS`

and press the Enter key.

33 Close files on volumes on the DDU of the IOC by typing

`>STOPDEV dev_name`

and pressing the Enter key.

where

dev_name
is the name of the device

34 To quit the allocation utility, type

`>QUIT`

and press the Enter key.

Disk drive and magnetic tape controller cards in an IOC (end)

35 Repeat the ALLOC command to determine if the files are closed by typing

>ALLOC

and pressing the Enter key.

If the files	Do
are open	step 36
are closed	step 37

36 Confirm that you have done steps 31 to 35. If the files are still open, contact your next level of support.

37 Manually busy the DDU, by typing

>BSY

and pressing the Enter key.

If the DDU	Do
is ManB	step 9
is not ManB	step 40

38 When cards are replaced and the DDU is in service, open the files. Use the procedure “Allocating Recording Volumes in the DIRP Utility" in *Routine Maintenance Procedures*.

39 To determine why the component is offline, consult operating company personnel. Continue as directed by operating company personnel.

40 For additional help, contact the next level of support.

41 The procedure is complete.

NT1X67 in an IOC

Application

Use this procedure to replace an NT1X67 in an input/output controller (IOC).

PEC	Suffix	Card name	Shelf or frame name
NT1X67	AA, AB, BC, BD, CB	Terminal controller card	IOC
NT1X67	BA, DA	Datalink controller card	IOC
NT1X67	BB, DB	DATAPAC controller card	IOC
NT1X67	FA	SMDI controller card	IOC

Refer to the Index if you cannot identify the following features for the card you want to replace:

- product engineering code (PEC)
- PEC suffix
- provisioned shelf
- provisioned frame

The Index contains a list of the cards, shelves, and frames documented in this card replacement book.

Common procedures

This procedure refers to *Replacing a card*.

Do not go to the common procedure unless the step-action procedure directs you to go.

Action

This procedure contains a summary flowchart and a list of steps. Use the flowchart to review the procedure. Follow the steps to perform the procedure.

NT1X67 in an IOC (continued)

Summary of replacing a NT1X67 in an IOC

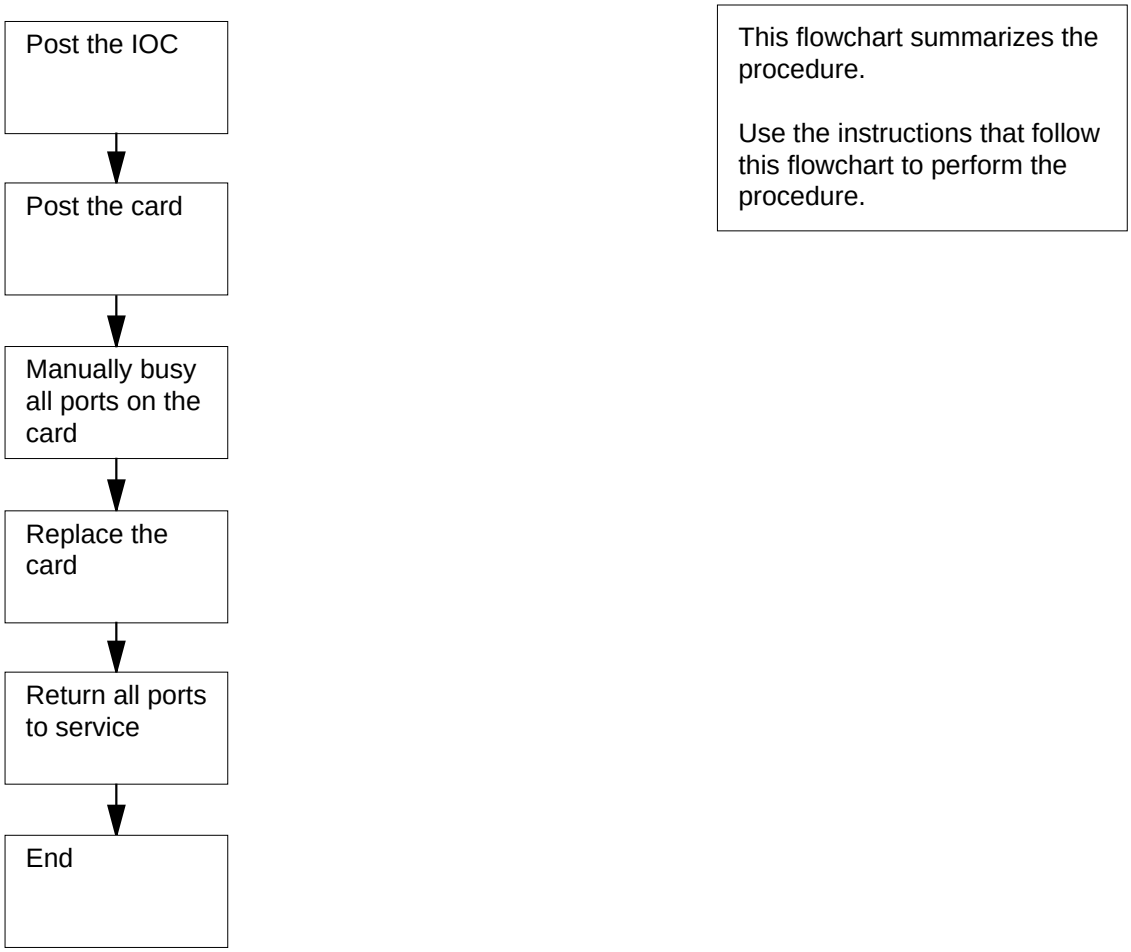

NT1X67
in an IOC (continued)

Replacing a NT1X67 in an IOC

At the shelf

1

WARNING
Loss of billing and other data
Do not proceed if NT2X70AA, NT2X70AB, or NT2X70AC power converter cards power the IOC shelf. The following cards may not function reliably in an IOC powered by NT2X70AA, NT2X70AB, or NT2X70AC cards: NT1X55FA, NT1X89, or NT1X67BC/BD that run applications at 9600 baud (on one port or all four ports combined). Contact the personnel responsible for the next level of support.

WARNING
Loss of service
If you remove IOC P-side ports from service, you can affect MAP access for other operating company personnel. Perform this procedure during periods of low maintenance activity.

Obtain a replacement card. Make sure the replacement card and the card you remove have the same PEC and PEC suffix.

2 Determine which power converter card is on the shelf that contains the card you want to replace.

If the power converter card is	Do
an NT2X70AA, NT2X70AB, or NT2X70AC	step 19
an NT2X70AD or NT2X70AE	step 3

At the MAP terminal

3 To access the IOD level of the MAP display, type

```
>MAPCI;MTC;IOD
```

and press the Enter key.

Example of a MAP display:

NT1X67
in an IOC (continued)

```
IOD
IOC  0  1  2  3
STAT .  .  .  .
```

4 To post the IOC that associates with the card you will replace, type

>IOC ioc_no

and press the Enter key.

where

ioc_no
is the IOC identification number (0 to 19)

Example of a MAP display:

```
IOD
IOC  0  1  2  3
STAT .  .  .  .

DIRP: AMA  B XFER:   .    SLM : SLMbsy NOP :   .    NX25:   .
MLP :   .    DPPP:   .    DPPU:   .    SCAI:   .

IOC   CARD    0     1     2     3     4     5     6     7     8
 0    PORT  0123  0123  0123  0123  0123  0123  0123  0123  0123

      STAT  .---  .---  ....  .---  ....  ----  ..--  .---  ----
      TYPE  MTD   DDU   CONS  MPC   CONS        CONS  MPC
```

5 To post the card, type

>CARD card_no

and press the Enter key.

where

card_no
is the card identification number (0 to 8)

Example of a MAP display:

NT1X67
in an IOC (continued)

```
IOD
IOC  0  1  2  3
STAT .  .  .  .

DIRP: AMA  B XFER:   .    SLM : SLMbsy NOP :   .    NX25:   .
MLP :   .    DPPP:   .    DPPU:   .    SCAI:   .

IOC   CARD    0     1     2     3     4     5     6     7     8
 0    PORT  0123  0123  0123  0123  0123  0123  0123  0123  0123
      STAT  .---  .---  ....  .---  ....  ----  ..--  .---  ----
      TYPE  MTD   DDU   CONS  MPC   CONS        CONS  MPC

Card   6   Ckt      0         1         2         3
Status              .         .         -         -
Cons Id          RD040     RD041     TEAM4     TEAM6
ConType          VT100     VT100     VT100     VT100
```

6 Note the CONS ID and status for each port.

Note: If you use a minimum of one of these IDs to access the MAP maintenance levels, logout. Use an ID on a different card or a different IOC.

If	Do
all ports are `ManBsy`	step 12
a minimum of one port is `Offl`	step 20
a minimum of one port is `.` (dot)	step 7
all ports are in any other out-of-service state	step 8

7 Notify all operating company personnel that you will remove from service the CONS IDs that associate with the card you replace.

8 To manually busy a port on the card, type

`>BSY  port_no`

and press the Enter key.

where

port_no
is the port identification number (0 to 3)

If the BSY command	Do
passed	step 9
failed	step 21

9 Repeat step 8 until you manually busy all ports on the card. Go to step 10.

NT1X67
in an IOC (continued)

10 To offline a port on the card, type

>OFFL port_no

and press the Enter key.

where

port_no
is the port identification number (0 to 3)

If the OFFL command	Do
passed	step 11
failed	step 21

11 Repeat step 10 until you offline all ports on the card. Go to step 12.

At the shelf

12

WARNING
Static electricity damage
Wear a wrist strap that connects to the wrist-strap grounding point to handle circuit cards. The wrist-strap grounding point is on a frame supervisory panel (FSP) or a modular supervisory panel (MSP). The wrist trap protects the cards against static electricity damage.

To replace the card, use the procedure *Replacing a card* in this document. Complete the procedure and return to this point.

Note: Determine if the card you replace has switches. Make sure the switches on the replacement card and the card you replace have the same settings.

At the MAP terminal

13 To manually busy a port on the card, type

>BSY port_no

and press the Enter key.

where

port_no
is the port identification number (0 to 3)

If the BSY command	Do
passed	step 14

NT1X67 in an IOC (end)

If the BSY command	Do
failed	step 21

14 Repeat step 13 until you manually busy all ports on the card. Go to step 15.

15 To return a port to service, type

>RTS port_no

and press the Enter key.

where

port_no
is the port identification number (0 to 3)

If the RTS command	Do
passed	step 16
failed	step 21

16 Repeat step 15 until you return all ports to service. Go to step 17.

17 The next action depends on why you perform this procedure.

If a maintenance procedure	Do
directed you to this procedure	step 18
did not direct you to this procedure	step 22

18 Return to the maintenance procedure that directed you to this procedure. Continue as directed by the maintenance procedure.

19 Do not proceed if NT2X70AA, NT2X70AB, or NT2X70AC power converter cards power the IOC shelf. The following cards may not function reliably in an IOC powered by NT2X70AA, NT2X70AB, or NT2X70AC power converter cards:

- NT1X55FA
- NT1X67BC or NT1X67BD the run applications at 9600 baud (on one port or all four ports combined)
- NT1X89

Go to step 21.

20 To determine why the port is offline, consult operating company personnel. Continue as directed by operating company personnel.

21 For additional help, contact the operating company personnel responsible for the next level of support.

22 The procedure is complete.

NT1X78 in an IOE DDU shelf

Application

Use this procedure to replace an NT1X78 in the shelves or frames listed in the following table.

PEC	Suffix	Card name	Shelf or frame name
NT1X78	AA	Power converter card (+5V, -5V, -12V, +24V)	single-disk drive unit (DDU) shelf in an input/output equipment (IOE) frame; two-DDU shelf in an IOE frame
NT1X78	KA	-60V power converter card (+5V, -5V, -12V, +24V)	single-DDU shelf in an IOE frame; two-DDU shelf in an IOE frame

Refer to the Index if you cannot identify the following features for the card you want to replace:

- product engineering code (PEC)
- PEC suffix
- equipped shelf
- equipped frame

The Index contains a list of the cars, shelves, and frames documented in this card replacement book.

Refer to figure Figure , "DDU shelf" on page -36 on page 8-26 for a diagram of the NT1X78 in a single-DDU shelf.

Common procedures

This procedure refers to *Replacing a card*.

Do not go to the common procedure unless the step-action procedure directs you to go.

Action

The following flowchart is a summary of the procedure. To replace the card, use the instructions that follow the flowchart.

NT1X78
in an IOE DDU shelf (continued)

Summary of Replacing a NT1X78 in an IOE DDU shelf

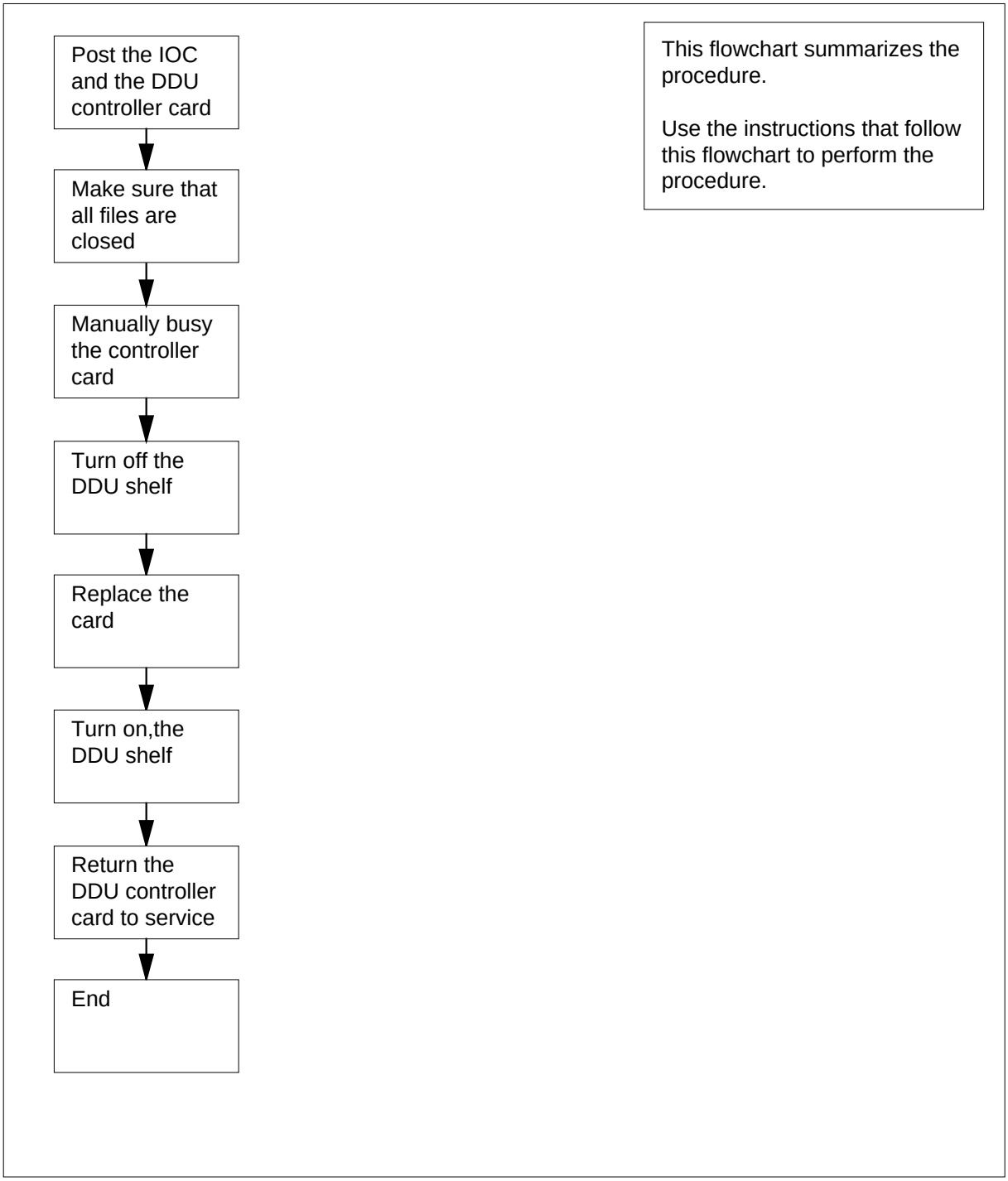

NT1X78
in an IOE DDU shelf (continued)

Replacing a NT1X78 in an IOE DDU shelf

At the MAP terminal

1

> **WARNING**
> **Loss of billing data**
> This procedure instructs you to power down a disk drive unit. The active automatic message accounting (AMA) file can be on the IOC that contains the card you replace. Make sure that you close all files before you power down the disk drive unit.

Obtain a replacement card. Make sure the replacement card and the card you remove have the same PEC and PEC suffix.

2 To access the IOD level of the MAP display, type

>MAPCI;MTC;IOD

and press the Enter key.

3 To post the IOC that associates with the card you will replace, type

>IOC ioc_no

and press the Enter key.

where

ioc_no
is the IOC identification number (0 to 19)

Example of a MAP response:

```
IOD
IOC  0  1  2  3
STAT .  .  .  .


DIRP: AMA  B XFER:   .    SLM : SLMbsy NOP                 : .  NX25:   .
MLP :   .    DPPP:   .    DPPU:   .    SCAI:   .

IOC   CARD    0     1      2     3     4     5     6     7     8
            0 PORT  0123  0123  0123  0123  0123  0123    0123  0123  0123
              STAT  .---  .---  ....  .---  ....  ----  ..--  .---  ----
              TYPE  MTD   DDU   CONS  MPC   CONS        CONS  MPC
```

4 To post the DDU controller card, type

>CARD card_no

and press the Enter key.

NT1X78
in an IOE DDU shelf (continued)

where

card_no
is the card identification number (0 to 8)

Example of a MAP response:

```
IOD
IOC   0 1 2 3
 STAT . . . .

 DIRP: AMA  B XFER:   .    SLM : SLMbsy NOP                    :   .    NX25:
 MLP :   .    DPPP:   .    DPPU:   .    SCAI:   .

 IOC   CARD    0     1            2       3       4       5     6       7        8
   0   PORT  0123  0123  0123  0123  0123  0123          0123  0123  0123
       STAT  .---  .---  ....  .---  ....  ----  ..--  .---  ----
       TYPE    MTD   DDU   CONS  MPC   CONS       CONS  MPC
  Card 0   MTD          0
              TapeName
              Status     Idle
           User
```

5 Determine the state of the DDU controller card.

If the card	Do
is `MBSY`	step 9
is `OFFL`	step 24
is other than listed here	step 6

6 To determine if files are open on the DDU, type

`>ALLOC`

and press the Enter key.

Example of a MAP response:

```
VOLID  VOL_NAME  SERIAL_NO  BLOCKS  ADDR  TYPE  R/O            FILES_C
0        IMAGE              2800    45000      D000      0      NO          0
1         XPMLOADS         280      1      35000      D000     0     NO        0
2        RTMLOADS          2802            20000      D000     0     NO        0
                                    .
                                    .
                                    .

 7        SMDR               2807     5000       D000              0   NO      0
 8        AMA1               2808      5000       D000      0      NO          0
 9        TST                  2809      50          D000      0     NO          0
10        AMA2               280A      500         D000      0      NO          0
```

NT1X78
in an IOE DDU shelf (continued)

If files	Do
are open	step 17
are not open	step 7

7 To manually busy the controller, type

>BSY

and press the Enter key.

Example of a MAP response:

```
bsyOK
```

8 To spin down the DDU, type

>STOP

and press the Enter key.

Example of a MAP display:

```
Disk stop successful
```

9 Wait until the DDU spins down before you proceed to the next step. The status code `spun_down` appears under the Drive_State header on the MAP display.

NT1X78
in an IOE DDU shelf (continued)

At the shelf

10

DANGER
Risk of personal injury
If you touch the parts that rotate on the underside of the DDU, you can be injured.

WARNING
Static electricity damage
Wear a wrist strap that connects to the wrist-strap grounding point to handle circuit cards. The wrist-strap grounding point is on a frame supervisory panel (FSP) or a modular supervisory panel (MSP). The wrist strap protects the cards against static electricity damage.

Set the POWER switch on the power converter to the OFF position.

11 To replace the card, perform the procedure *Replacing a card* in this document. Complete the procedure and return to this point.

Note: Determine if the card you will replace has switches. Make sure the switches on the replacement card and the card you will replace have the same settings.

12 Reset the power converter as follows:

a Set the POWER switch on the converter to the ON position.

b Press and hold the RESET button on the power converter.

c When the CONVERTER FAIL lamp turns off, release the RESET button.

13 Make sure the power LED is lit. The power LED indicates that the power converter is on.

If the power LED	Do
is lit	step 14
is not lit	step 25

NT1X78
in an IOE DDU shelf (continued)

At the MAP terminal

14 To return the DDU controller to service, type

>RTS

and press the Enter key.

Note: The RTS command can take 3 min to complete. The RTS command also spins up the disk drive.

If the RTS command	Do
passed	step 15
failed	step 25

15 The next action depends on why you perform this procedure.

If a maintenance procedure	Do
directed you to this procedure	step 16
did not direct you to this procedure	step 26

16 Return to the maintenance procedure that directed you to this procedure. Continue as directed by the maintenance procedure.

17

CAUTION
Loss of data
If files are open do not busy the controller. If you busy the controller while files are open, billing data will be lost. For additional help, contact the next level of support.

If device independent recording package (DIRP) volumes are open, the following events occur:

- the DDU drops SysB
- billing data is lost
- open Logutil files are lost or corrupted

Before starting card replacement procedures, close the DIRP volumes. Close files from DIRP and demount active volumes from the DDU. Use the procedure, “Deallocating Recording Volumes in the DIRP Utility" in *Routine Maintenance Procedures*.

18 Stop files recording to and from the Logutil. Type the following command at the Logutil command level:

>LOGUTIL;LISTDEVS

NT1X78
in an IOE DDU shelf (continued)

and press the Enter key.

19 Close files on volumes on the DDU of the IOC.

>STOPDEV dev_name

and press the Enter key.

where

dev_name
is the name of the device

>QUIT

and press the Enter key.

20 Repeat the ALLOC command to determine if files are closed, by typing

>ALLOC

and pressing the Enter key.

If the files	Do
are open	step 21
are closed	step 22

21 Confirm that you have done steps 17 to 20. If the files are still open, contact your next level of support.

22 Manually busy the DDU, by typing

>BSY

and pressing the Enter key.

If the DDU	Do
is MBSY	step 23
is not MBSY	step 25

23 When cards are replaced and the DDU is in service, open the files. Use the procedure “Allocating Recording Volumes in the DIRP Utility" in *Routine Maintenance Procedures*.

24 Contact operating company personnel to determine why the component is offline. Continue as directed by operating company personnel.

25 For additional help, contact the next level of support.

26 The procedure is complete.

NT1X78 in an IOE DDU shelf (end)

DDU shelf

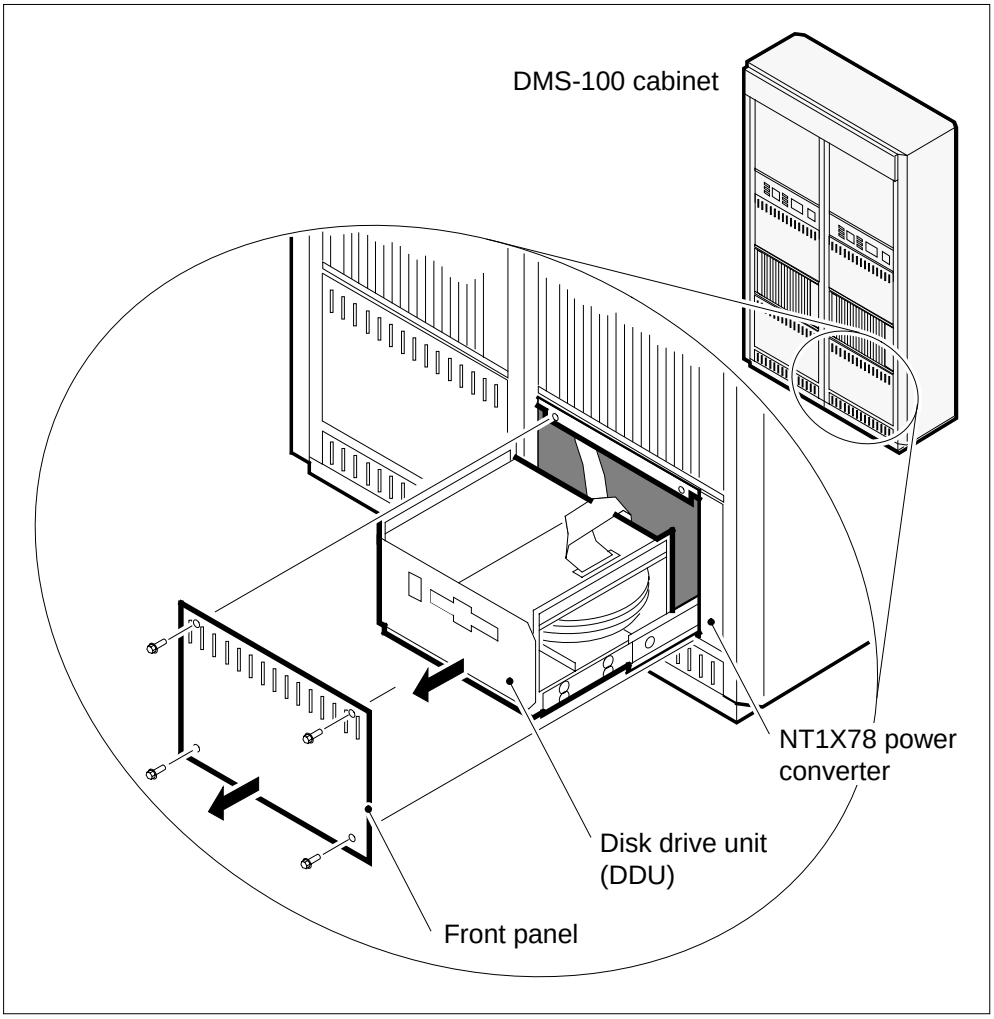

NT1X89
in an IOC shelf

Application

Use this procedure to replace an NT1X89 in an input/output controller (IOC), as listed in the following table.

PEC	Suffix	Card name	Shelf or frame name
NT1X89	AA, AB	Multiprotocol controller card	IOC
NT1X89	BB	Enhanced multiprotocol controller card	IOC

Refer to the Index if you cannot identify one of the following features for the card you want to replace:

- product engineering code (PEC)
- PEC suffix
- equipped shelf
- equipped frame

The Index contains a list of the cards, shelves, and frames documented in this card replacement book.

Common procedures

This procedure refers to *Replacing a card*.

Do not go to the common procedure unless the step-action procedure directs you to go.

Action

This procedure contains a summary flowchart and a list of steps. Use the flowchart to review the procedure. Follow the steps to perform the procedure.

NT1X89 in an IOC shelf (continued)

Summary of replacing a NT1X89 in an IOC shelf

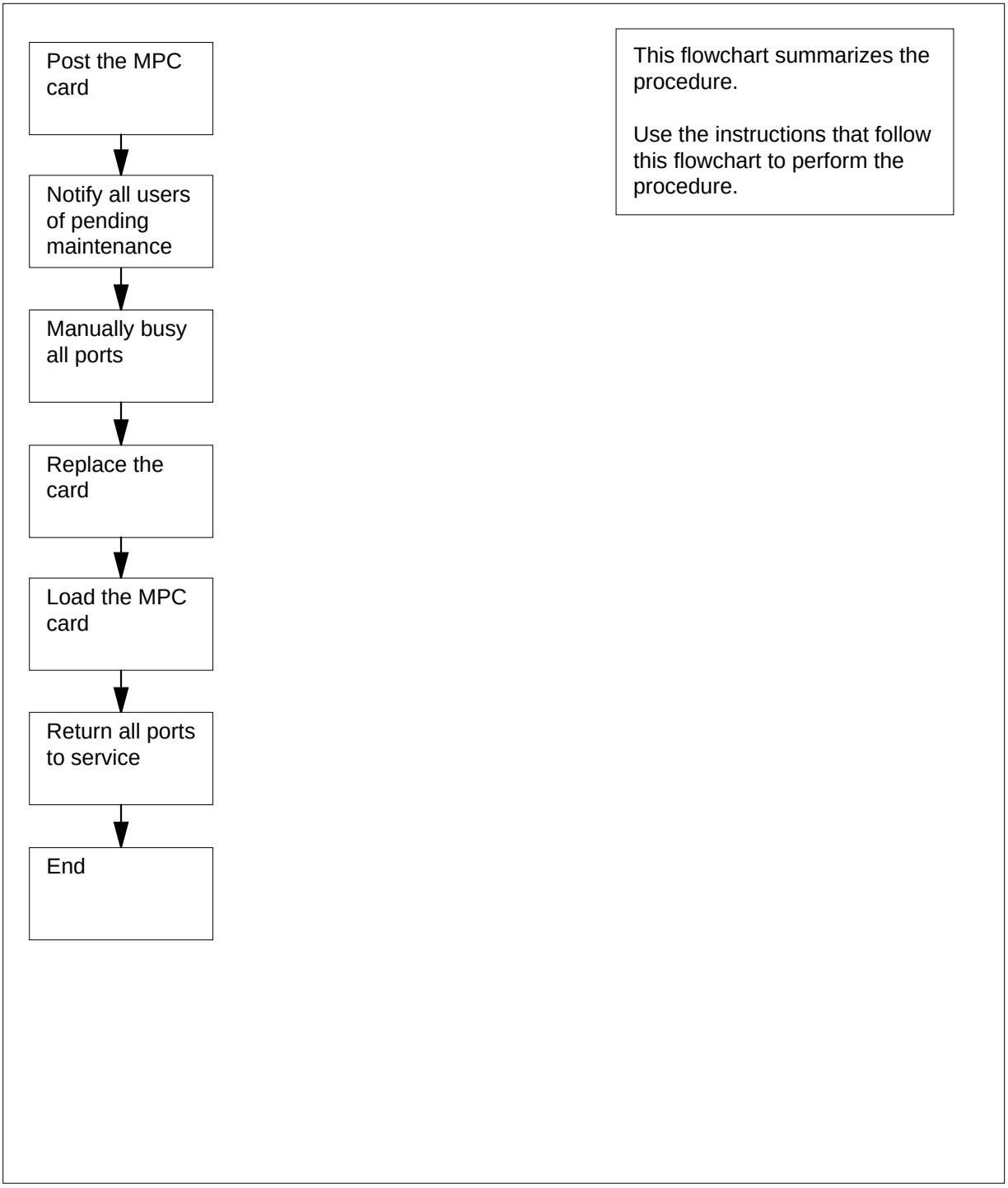

NT1X89
in an IOC shelf (continued)

Replacing a NT1X89 in an IOC shelf

At the MAP terminal

1

WARNING
Loss of billing and other data
Do not proceed if NT2X70AA, NT2X70AB, or NT2X70AC power converter cards power the IOC shelf. The following cards may not function reliably in an IOC powered by NT2X70AA, NT2X70AB, or NT2X70AC cards: NT1X55FA, NT1X89, or NT1X67BC/BD that run applications at 9600 baud (on one port or all four ports combined). Contact the personnel responsible for the next level of support.

WARNING
Loss of service
Perform this procedure during periods of low traffic. If you remove a multiprotocol controller (MPC) card from service you can affect Data Packet Network (DPN) service and the service of any other MPC cards on the same IOC shelf.

Obtain a replacement card. Make sure the replacement card and the you remove have the same PEC and PEC suffix.

2 Determine which power converter card is on the shelf that contains the card you want to replace.

If the power converter card	Do
is an NT2X70AA, NT2X70AB, or NT2X70AC	step 18
is an NT2X70AD or NT2X70AE	step 3

3 To access the IOD level of the MAP display, type

`>MAPCI;MTC;IOD`

and press the Enter key.

Example of a MAP display:

NT1X89
in an IOC shelf (continued)

```
IOD
IOC  0  1  2  3
STAT .  .  .  .
```

4 To post the IOC associated with the card you will replace, type

>IOC ioc_no

and press the Enter key.

where

ioc_no
is the IOC identification number (0 to 19)

Example of a MAP display:

```
IOD
IOC  0  1  2  3
STAT .  .  .  .

DIRP: AMA  B XFER:   .    SLM : SLMbsy NOP :   .    NX25:   .
MLP :   .    DPPP:   .    DPPU:   .    SCAI:   .

IOC   CARD    0     1     2     3     4     5     6     7     8
 0    PORT  0123  0123  0123  0123  0123  0123  0123  0123  0123
      STAT  .---  .---  ....  .---  ....  ----  ..--  .---  ----
      TYPE  MTD   DDU   CONS  MPC   CONS        CONS  MPC
```

5 To post the card, type

>CARD card_no

and press the Enter key.

where

card_no
is the card identification number (0 to 8)

Example of a MAP display:

```
IOD
IOC  0  1  2  3
STAT .  .  .  .

DIRP: AMA  B XFER:   .    SLM : SLMbsy NOP :   .    NX25:   .
MLP :   .    DPPP:   .    DPPU:   .    SCAI:   .

IOC   CARD    0     1     2     3     4     5     6     7     8
 0    PORT  0123  0123  0123  0123  0123  0123  0123  0123  0123
      STAT  .---  .---  ....  .---  ....  ----  ..--  .---  ----
      TYPE  MTD   DDU   CONS  MPC   CONS        CONS  MPC
Card 3   Unit          0
         User      SYSTEM    BOARD  LINK0  LINK1  LINK2   LINK3
         Status      Ready   COMACT UNEQ   N/A    UNEQ    ENABLD
```

NT1X89
in an IOC shelf (continued)

6 Determine the state of the card.

If the card state is	Do
MANB	step 11
OFFL	step 19
other than listed here	step 7

Note: The card state appears under the BOARD header on the MAP display.

7 To display status information on current MPC conversations, type

>QCONV

and press the Enter key.

Example of a MAP response:

```
MPC  L  LCN  STATUS   CCC  SEC  PARDEV  INP  OPEN OWNER
---  -  --- --------- ---- ---- ------  ---- ---- ------
  0  3    1 INACTIVE  none none none     FIL    0 none
  0  3    2 INACTIVE  none none none     FIL    0 none
```

If	Do
a minimum of one session is active	step 8
all sessions are inactive	step 9

8 Notify all users of the MPC card you will replace that an interruption of service will occur. Also notify all users of the other MPC cards on the same IOC shelf that an interruption of service may occur.

Wait until all sessions are inactive before you proceed. If you need to verify MPC activity, repeat step 6.

9 To manually busy the card and the links of the card, type

>BSY ALL FORCE

and press the Enter key.

Example of a MAP response:

```
TYPE YES TO VERIFY FORCE, NO TO CANCEL COMMAND
Please confirm ("YES", "Y", "NO", or "N"):
```

10 To confirm the command, type

>YES

and press the Enter key.

Example of a MAP response:

NT1X89
in an IOC shelf (continued)

```
REQUEST PASSED FOR LINKS.
REQUEST PASSED FOR CARD.
```

If the BSY command	Do
passed	step 11
failed	step 20

At the shelf

11

> **WARNING**
> **Static electricity damage**
> Wear a wrist strap that connects to the wrist-strap grounding point to handle circuit cards. The wrist-strap grounding point is on a frame supervisory panel (FSP) or a modular supervisory panel (MSP). The wrist strap protects the cards against static electricity damage.

To replace the card, use the procedure *Replacing a card* in this document. Complete the procedure and return to this point.

> ***Note:*** Determine if the card you replace has switches. Make sure the switches on the replacement card and the card you replace have the same settings.

12 The next action depends on why you perform this procedure.

If a maintenance procedure	Do
directed you to this procedure	step 13
did not direct you to this procedure	step 14

13 Return to the maintenance procedure that directed you to this procedure. Continue as directed by the maintenance procedure.

At the MAP terminal

14 To load the MPC, type

`>DOWNLD`

and press the Enter key.

Example of a MAP response:

NT1X89 in an IOC shelf (end)

```
DOWNLOAD OF TABLE MPC FILE "MPC403AB" SUCCEEDED.
```

If the DOWNLD command	Do
passed	step 15
failed	step 20

15 To return the MP to service, type

>RTS ALL

and press the Enter key.

Example of a MAP response:

```
REQUEST PASSED FOR CARD.
REQUEST PASSED FOR LINKS.
```

16 Wait 1 min to determine the status of MPC components.

If	Do
the system status is `Ready`, the board status is `COMACT`, and the link status is `ENABLD` for each provisioned link	step 17
the status of MPC components is other than listed here	step 20

17 Notify users that the MPC is in service.

18 Do not proceed if NT2X70AA, NT2X70AB, or NT2X70AC power converter cards power the IOC shelf. The following cards may not function reliably in an IOC powered by NT2X70AA, NT2X70AB, or NT2X70AC power converter cards:

- NT1X55FA
- NT1X67BC or NT1X67BD the run applications at 9600 baud (on one port or all four ports combined)
- NT1X89

Go to step 20.

19 To determine why the MPC is offline, contact operating company personnel. Continue as directed by operating company personnel.

20 For additional help, contact the next level of support.

21 The procedure is complete.

NT2X70 in an IOC

Application

Use this procedure to replace an NT2X70 in an input/output controller (IOC).

PEC	Suffix	Card name	Shelf or frame name
NT2X70	AD, AE, AF	Power converter card	IOC
NT2X70	EA	-48 V power converter card	IOC

If NT2X70AA, NT2X70AB, or NT2X70AC power converter cards power the IOC shelf, contact the personnel responsible for the next level of support. The following cards may not function reliably in an IOC powered by NT2X70AA, NT2X70AB, or NT2X70AC cards:

- NT1X55FA
- NT1X67BC or NT1X67BD that run applications at 9600 baud (on one port or all four ports combined)
- NT1X89

Refer to the Index if you cannot identify one of the following features for the card you want to replace:

- product engineering code (PEC)
- PEC suffix
- equipped shelf
- equipped frame

The Index contains a list of cards,shelves, and frames documented in this card replacement book.

Common procedures

This procedure refers to *Replacing a card*.

Do not go to the common procedure unless the step-action procedure directs you to go.

NT2X70
in an IOC (continued)

Action

This procedure contains a summary flowchart and a list of steps. Use the flowchart to review the procedure. Follow the steps to perform the procedure.

NT2X70 in an IOC (continued)

Summary of replacing a NT2X70 in an IOC

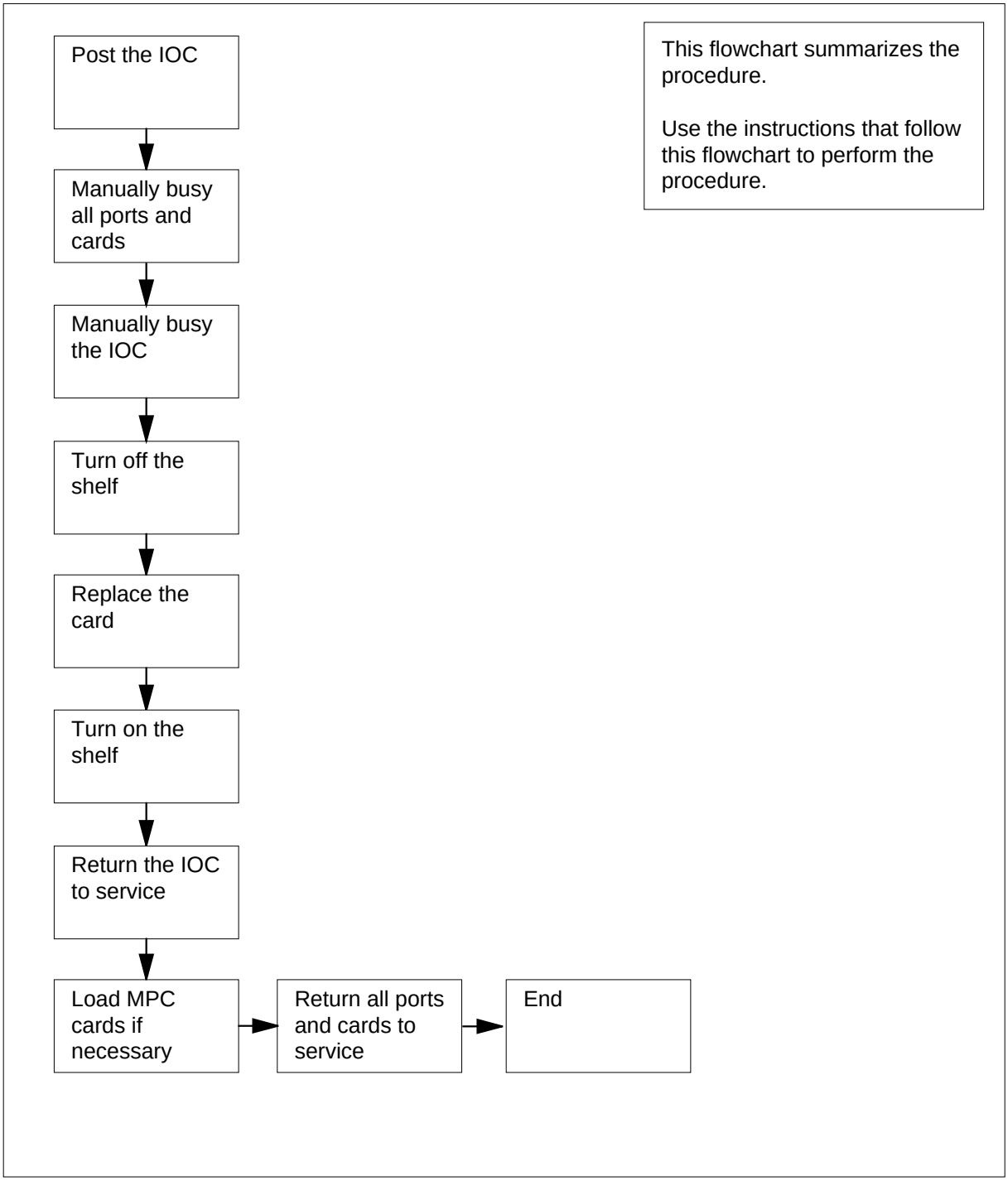

NT2X70
in an IOC (continued)

Replacing a NT2X70 in an IOC

At the MAP terminal

1

> **ATTENTION**
> This procedure directs you to manually busy all terminal controller cards for the IOC. Perform this procedure from a MAP terminal that does not connect to the IOC.

> **WARNING**
> **Loss of service**
> This procedure directs you to remove an IOC and the device controllers from service. Perform this procedure only if you need to recover out-of-service components. Unless it si urgent, perform this procedure during periods of low traffic only.

> **WARNING**
> **Loss of billing and other data**
> If NT2X70AA, NT2X70AB, or NT2X70AC power converter cards power the IOC shelf, contact the personnel responsible for the next level of support. The following cards may not function reliably in an IOC powered by NT2X70AA, NT2X70AB, or NT2X70AC cards: NT1X55FA, NT1X89, or NT1X67BC/BD that run applications at 9600 baud (on one port or all four ports combined).

Obtain a replacement card. Make sure that the replacement card and the card you remove have the same PEC and PEC suffix.

2 To access the IOD level of the MAP display, type

```
>MAPCI;MTC;IOD
```

and press the Enter key.

3 To post the IOC that associates with the card you will replace, type

```
>IOC  ioc_no
```

and press the Enter key.

where

NT2X70
in an IOC (continued)

ioc_no
is the IOC identification number (0 to 19)

Example of a MAP display:

```
IOC  0  1  2  3
STAT .  .  .  .

DIRP: NO AMA XFER:   .    SLM :   .    NOP :   .    NX25:   .
MLP :   .    DPPP:   .    DPPU:   .    SCAI:   .

IOC   CARD    0     1     2     3     4     5     6     7     8
 0    PORT  0123  0123  0123  0123  0123  0123  0123  0123  0123

      STAT  P---  P---  ....  .---  ....  .---  ....  .---  ....

      TYPE  MTD   DDU   CONS  MPC   CONS  CONS  CONS  MPC   CONS
```

4 The next action depends on if terminal controller cards are on the shelf.

If terminal controller cards	Do
are on the shelf	step 5
are not on the shelf	step 11

5 To post the card, type

>CARD card_no

and press the Enter key.

where

card_no
is the card identification number (0 to 8)

Example of a MAP response:

NT2X70
in an IOC (continued)

```
IOD
IOC  0  1  2  3
STAT .  .  .  .

DIRP: AMA  B XFER:   .    SLM : SLMbsy NOP :   .    NX25:   .
MLP :   .    DPPP:   .    DPPU:   .    SCAI:   .

IOC   CARD    0     1     2     3     4     5     6     7     8
 0    PORT  0123  0123  0123  0123  0123  0123  0123  0123  0123

      STAT  .---  .---  ....  .---  ....  ----  ..--  .---  ----

      TYPE  MTD   DDU   CONS  MPC   CONS        CONS  MPC
Card   6   Ckt      0         1         2         3
Status             .         .         -         -
Cons Id          RD040     RD041     TEAM4     TEAM6
ConType          VT100     VT100     VT100     VT100
```

6 Note the CONS ID and status for each port.

If	Do
all ports are `ManBsy`	step 10
a minimum of one port is `Offl`	step 60
a minimum of one port is `.` (dot)	step 7
all ports are in any other out-of-service state	step 8

7 Notify all operating company personnel that you will remove from service the CONS IDs that associate with the card you replace. Wait until all operating company personnel cease activity for these CONS IDs.

8 To manually busy a port on the card, type

`>BSY  port_no`

and press the Enter key.

where

port_no
is the port identification number (0 to 3)

If the BSY command	Do
passed	step 9
failed	step 68

9 Repeat step 8 until all ports on the card are manually busy. Go to step 10.

NT2X70
in an IOC (continued)

10 Repeat steps 5 to 9 for each terminal controller card on the shelf. Go to step 11.

11 The next action depends on if multiprotocol controller cards (MPC) are on the shelf.

If MPC cards	Do
are on the shelf	step 12
are not on the shelf	step 19

12 To post the card, type

>CARD card_no

and press the Enter key.

where

card_no
is the card identification number (0 to 8)

Example of a MAP response:

```
IOD
IOC  0  1  2  3
STAT .  .  .  .

DIRP: AMA  B XFER:   .    SLM : SLMbsy NOP :   .    NX25:   .
MLP :   .    DPPP:   .    DPPU:   .    SCAI:   .

IOC   CARD    0     1     2     3     4     5     6     7     8
 0    PORT  0123  0123  0123  0123  0123  0123  0123  0123  0123

      STAT  .---  .---  ....  .---  ....  ----  ..--  .---  ----

      TYPE  MTD   DDU   CONS  MPC   CONS        CONS  MPC
Card 3   Unit          0
         User      SYSTEM    BOARD  LINK0  LINK1  LINK2   LINK3
         Status      Ready   COMACT UNEQ   N/A    UNEQ    ENABLD
```

13 Determine the state of the card.

If the card state	Do
is MANB	step 18
is OFFL	step 60
is other than listed here	step 14

Note: The card state appears under the BOARD header on the MAP display.

14 To display status information on current MPC conversations, type

>QCONV

and press the Enter key.

Example of a MAP response:

```
MPC  L  LCN  STATUS   CCC  SEC  PARDEV  INP  OPEN OWNER
---  -  --- --------- ---- ---- ------  ---- ---- -------
 0  3    1 INACTIVE  none none none     FIL    0 none
 0  3    2 INACTIVE  none none none     FIL    0 none
```

If	Do
a minimum of one session is active	step 15
all sessions are inactive	step 16

15 Notify all users that an interruption of MPC service will occur. Wait until all sessions are inactive before you proceed. Repeat step 14 if you need to verify MPC session activity.

16 To manually busy the card and links, type

>BSY ALL FORCE

and press the Enter key.

Example of a MAP response:

```
TYPE YES TO VERIFY FORCE, NO TO CANCEL COMMAND
Please confirm ("YES", "Y", "NO", or "N"):
```

17 To confirm the command, type

>YES

and press the Enter key.

Example of a MAP response:

```
REQUEST PASSED FOR LINKS.REQUEST PASSED FOR CARD.
```

If the BSY command	Do
passed	step18
failed	step 68

18 Repeat steps 12 to 17 for each MPC card on the shelf. Go to step 19.

NT2X70
in an IOC (continued)

19 The next action depends on if disk drive or magnetic tape controller cards are on the shelf.

If disk drive controller cards	Do
are on the shelf	step 20
are not on the shelf	step 25

20 To post the card, type

>CARD card_no

and press the Enter key.

where

card_no
is the card identification number (0 to 8)

Example of a MAP response:

```
IOD
IOC  0  1  2  3
STAT .  .  .  .

DIRP: AMA  B XFER:   .    SLM : SLMbsy NOP :   .    NX25:   .
MLP :   .    DPPP:   .    DPPU:   .    SCAI:   .

IOC   CARD    0     1     2     3     4     5     6     7     8
 0    PORT  0123  0123  0123  0123  0123  0123  0123  0123  0123

      STAT  .---  .---  ....  .---  ....  ----  ..--  .---  ----

      TYPE  MTD   DDU   CONS  MPC   CONS        CONS  MPC
Card 0   MTD           0
         TapeName
         Status     Idle
         User
```

21 Determine the state of the card.

If the card	Do
is MBSY	step 24
is OFFL	step 60
is other than listed here	step 22

22 To determine if files are open on the DDU, type

>ALLOC

and press the Enter key.

Example of a MAP response:

```
VOLID  VOL_NAME  SERIAL_NO  BLOCKS  ADDR  TYPE  R/O  FILES_OPEN

  0    IMAGE        2800     45000  D000    0   NO        0
  1    XPMLOADS     2801     35000  D000    0   NO        0
  2    RTMLOADS     2802     20000  D000    0   NO        0
     .
     .
     .
  7    SMDR         2807      5000  D000    0   NO        0
  8    AMA1         2808      5000  D000    0   NO        0
  9    TST          2809        50  D000    0   NO        0
 10    AMA2         280A       500  D000    0   NO        0
```

If files	Do
are open	step 61
are not open	step 23

23 To manually busy the controller, type

>BSY

and press the Enter key.

Example of a MAP response:

```
bsy
OK
```

24 Perform steps 20 to 23 for each disk drive controller card on the shelf. Go to step 25.

25 The next action depends on if magnetic tape drive controller cards are on the shelf.

If magnetic tape controller cards	Do
are on the shelf	step 26
are not on the shelf	step 31

26 To post the card, type

>CARD card_no

and press the Enter key.

where

card_no
is the card identification number (0 to 8)

Example of a MAP response:

NT2X70
in an IOC (continued)

```
IOD
IOC  0  1  2  3
STAT .  .  .  .

DIRP: AMA  B XFER:   .    SLM : SLMbsy NOP :   .    NX25:   .
MLP :   .    DPPP:   .    DPPU:   .    SCAI:   .

IOC   CARD    0     1     2     3     4     5     6     7     8
 0    PORT  0123  0123  0123  0123  0123  0123  0123  0123  0123

      STAT  .---  .---  ....  .---  ....  ----  ..--  .---  ----

      TYPE  MTD   DDU   CONS  MPC   CONS        CONS  MPC
Card 0   MTD           0
         TapeName
         Status     Idle
         User
```

27 Determine the state of the card.

If the card	Do
is `ManBsy`	step 30
is `Offl`	step 60
is `Idle`	step 29
is other than listed here	step 28

28 Notify all users that an interruption of service for the device will occur. Wait until all users cease to access the device before you proceed to the next step.

29 To manually busy the card, type

>BSY

and press the Enter key.

Example of a MAP response:
bsyOK

30 Repeat steps 26 to 29 for each magnetic tape drive controller card on the shelf. Go to step 31.

31 To return to the IOC level of the map display, type

>QUIT

and press the Enter key.

32 Determine the state of the IOC.

If the state of the IOC	Do
is `M`	step 34

NT2X70
in an IOC (continued)

If the state of the IOC	Do
is other than listed here	step 33

33 To manually busy the IOC, type

>BSY IOC

and press the Enter key.

At the shelf

34

WARNING
Static electricity damage
Wear a wrist strap that connects to the wrist-strap grounding point to handle circuit cards. The wrist-strap grounding point is on a frame supervisory panel (FSP) or a modular supervisory panel (MSP). The wrist strap protects the cards against static electricity damage.

Pull down and set the handle of the power converter POWER switch to the OFF position.

35 To replace the card, perform the procedure *Replacing a card* in this document. Complete the procedure and return to this point.

Note 1: Make sure the handle of the PWR switch on the replacement power converter is in the OFF position.

Note 2: Determine if the card you replace has switches. Make sure the switches on the replacement card and the card you replace have the same settings.

36 The next action depends on the power converter version and the type of supervisory panel.

If you	Do
replace an NT2X70AE card and the FSP or MSP has circuit breakers	step 33
replace an NT2X70AE card and the FSP or MSP does not have circuit breakers	step 38
do not replace an NT2X70AE card and the FSP or MSP has circuit breakers	step 39
do not replace an NT2X70AE card and the FSP or MSP does not have circuit breakers	step 40

NT2X70
in an IOC (continued)

37 Power up the converter as follows:

- **a** Pull up and set the handle of the POWER switch to the RESET position and hold.
- **b** Pull up and set the handle of the converter circuit breaker on the FSP or MSP until the handle clicks into place.
- **c** Release the handle.
- **d** Go to step 41.

38 Power up the converter as follows:

- **a** Pull up and set the handle of the POWER switch to the RESET position and hold until the CONVERTER FAIL LED turns off.
- **b** Release the handle.
- **c** Go to step 41.

39 Power up the converter as follows:

- **a** Pull up and set the handle of the POWER switch to the ON position.
- **b** Press and hold the RESET button on the power converter.
- **c** Pull up and set the handle of the converter circuit breaker on the FSP or MSP until the handle clicks into place.
- **d** Release the RESET button.
- **e** Go to step 41.

40 Power up the converter as follows:

- **a** Pull up and set the handle of the POWER switch to the ON position.
- **b** Press the RESET button on the power converter until the CONVERTER FAIL LED turns off.
- **c** Release the RESET button.

41 The next action depends on the reason you perform this procedure.

If a maintenance procedure	Do
directed you to this procedure	step 42
did not direct you to this procedure	step 43

42 Return to the maintenance procedure that directed you to this procedure. Continue as directed by the maintenance procedure.

At the MAP terminal

43 To return the IOC to service, type

```
>RTS  IOC
```

and press the Enter key.

NT2X70
in an IOC (continued)

44 The next action depends on if disk drive or magnetic tape controller cards are on the shelf.

If disk drive or magnetic tape controller cards	Do
are on the shelf	step 45
are not on the shelf	step 48

45 To post the card, type

>CARD card_no

and press the Enter key.

where

card_no
is the card identification number (0 to 8)

46 To return the controller to service, type

>RTS

and press the Enter key.

47 Repeat steps 45 and 46 for each disk drive or magnetic tape controller card on the shelf. Go to step 48.

48 The next action depends on if MPC cards are on the shelf.

If MPC cards	Do
are on the shelf	step 49
are not on the shelf	step 55

49 To post the card, type

>CARD card_no

and press the Enter key.

where

card_no
is the card identification number (0 to 8)

50 To load the MPC, type

>DOWNLD

and press the Enter key.

Example of a MAP response:

NT2X70
in an IOC (continued)

```
DOWNLOAD OF TABLE MPC FILE "MPC403AB" SUCCEEDED.
```

If the DOWNLD command	Do
passed	step 51
failed	step 68

51 To return the MPC to service, type

>RTS ALL

and press the Enter key.

Example of a MAP response:

```
REQUEST PASSED FOR CARD.REQUEST PASSED FOR LINKS.
```

52 Wait 1 min to determine the status of MPC components.

If	Do
the system status is `Ready`, the board status is `CO-MACT`, and the link status is `ENABLD` for each link	step 53
the status of the MPC components are other than listed here	step 68

53 Notify all users that the MPC is in service.

54 Repeat steps 49 to 53 for each MPC card on the shelf. Go to step 55.

55 The next action depends on if terminal controller cards are on the shelf.

If terminal controller cards	Do
are on the shelf	step 56
are not on the shelf	step 68

56 To post the card, type

>CARD card_no

and press the Enter key.

where

card_no
is the card identification number (0 to 8)

57 To return a port on the card to service, type

>RTS port_no

and press the Enter key.

where

port_no
is the port identification number (0 to 3)

If the RTS command	Do
passed	step 58
failed	step 68

58 Repeat step 57 until all ports on the card are manually busy. Go to step 59.

59 Repeat steps 56 to 58 for each terminal controller card on the shelf. Go to step 68.

60 To determine why the component is offline, contact operating company personnel. Continue as directed by operating company personnel.

61

WARNING
Loss of data
If files are open do not busy the controller. If you busy the controller while files are open, billing data will be lost. For additional help, contact the next level of support.

If device independent recording package (DIRP) volumes are open, the following events occur:

- the DDU drops SysB
- billing data is lost
- open Logutil files are lost or corrupted

Before starting card replacement procedures, close the DIRP volumes. Close files from DIRP and demount active volumes from the DDU. Use the procedure, “Deallocating Recording Volumes in the DIRP Utility" in *Routine Maintenance Procedures*.

62 Stop files recording to and from the Logutil. Type the following command at the Logutil command level:

```
>LOGUTIL;LISTDEVS
```

and press the Enter key.

63 Close files on volumes on the DDU of the IOC.

```
>STOPDEV  dev_name
```

and press the Enter key.

where

NT2X70 in an IOC (end)

dev_name
is the name of the device

>QUI

and press the Enter key.

64 Repeat the ALLOC command to determine if files are closed, by typing

>ALLOC

and pressing the Enter key.

If the files	Do
are open	step 65
are closed	step 66

65 Confirm that you have done steps 61 to 64. If the files are still open, contact your next level of support.

66 Manually busy the DDU, by typing

>BSY

and pressing the Enter key.

If the DDU	Do
is MBSY	step 67
is not MBSY	step 68

67 When cards are replaced and the DDU is in service, open the files. Use the procedure “Allocating Recording Volumes in the DIRP Utility" in *Routine Maintenance Procedures*.

68 For additional help, contact the next level of support.

69 The procedure is complete.

NTFX30 in an ISM

Application

Use this procedure to replace an NTFX30 IOM controller card in an integrated services module (ISM) shelf.

PEC	Suffix	Card name	Shelf or frame name
NTFX30	AA	Controller card	ISM

Refer to the Index, if you cannot identify one of the following features for the card that you want to replace:

- product engineering code (PEC)
- PEC suffix
- equipped frame
- equipped shelf

The Index contains a list of the cards, shelves, and frames that this card replacement book documents.

Common procedures

This procedure refers to the common procedure *Replacing a card*.

Do not go to the common procedure unless the step-action procedure directs you to go.

Action

This procedure contains a summary flowchart and a list of steps. Use the flowchart to review the procedure. Follow the steps to perform the procedure.

NTFX30 in an ISM (continued)

Summary of replacing a NTFX30 in an ISM

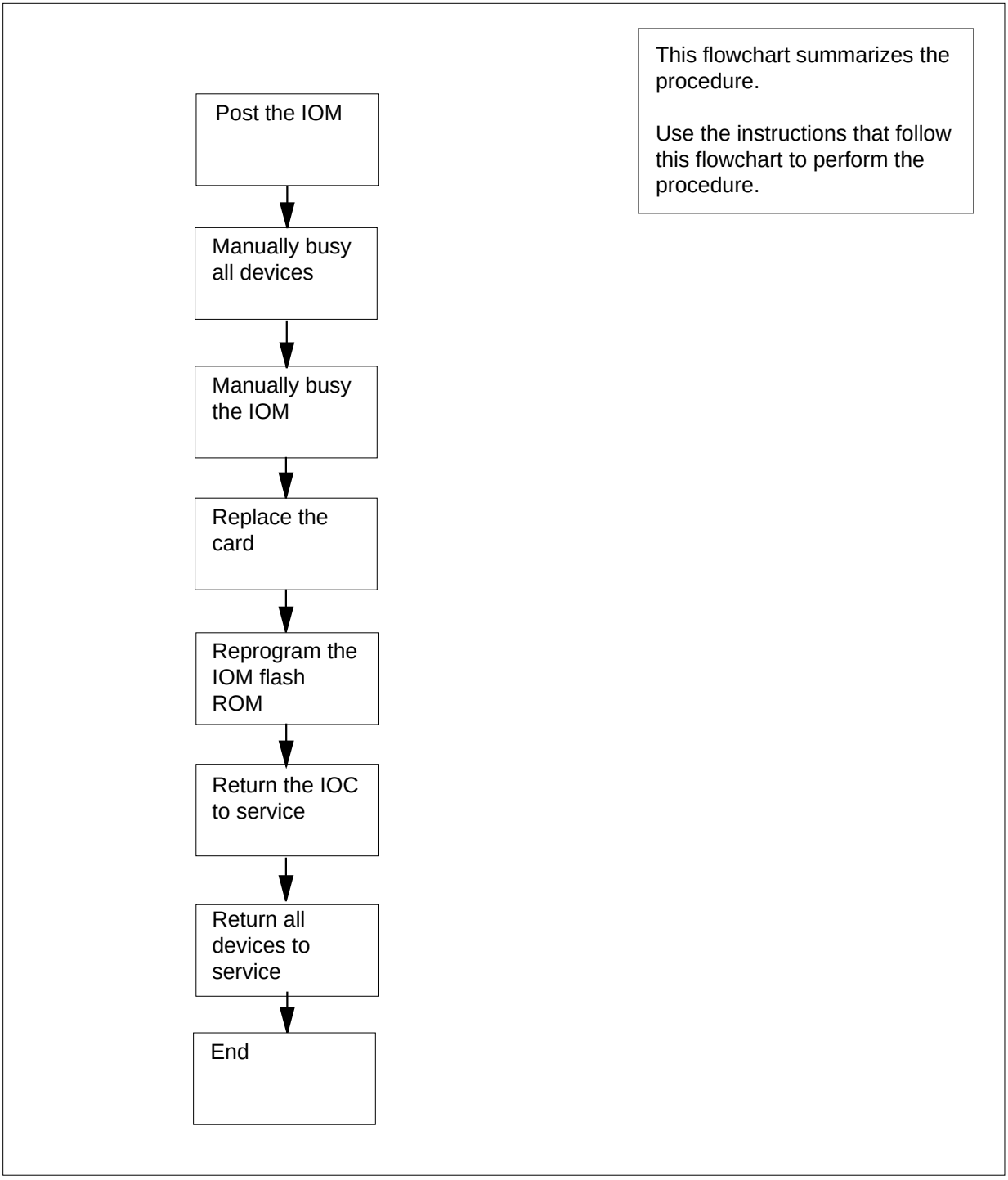

NTFX30
in an ISM (continued)

Replacing a NTFX30 in an ISM

ATTENTION

This procedure directs you to manually busy the controller card for the IOM. Perform this procedure from a MAP terminal that does not connect to the IOM.

WARNING

Loss of service

This procedure instructs you to remove the controller card for the IOM. Perform this procedure only if you need to recover out-of-service components. Unless it is urgent, perform this procedure during periods of low traffic only.

At the MAP terminal

1 Obtain a replacement card. Make sure that the replacement card and the card that you remove have the same PEC and PEC suffix.

At the MAP terminal

2 To access the IOD level of the MAP display, type

>MAPCI;MTC;IOD

and press the Enter key.

Example of a MAP display:

```
IOD
IOC  0  1  2  3
STAT .  .  .  S

DIRP: SMDR B XFER:   .   SLM :   .   NPO:   .   NX25:  .
MLP :   .    DPPP:   .   DPPU:   .   SCAI :
```

3 To post the IOM controller system configured, type

>IOC ioc_no

and press the Enter key.

where

ioc_no
is the IOM identification number

Example of an IOM MAP display:

NTFX30
in an ISM (continued)

```
IOD
IOC  0  1  2  3
STAT .  .  .  S

DIRP: SMDR B XFER:   .   SLM :   .   NPO:   .   NX25:  .
MLP :   .    DPPP:   .   DPPU:   .   SCAI :

IOC   PORT 0 1 2 3 4 5 6 7 8 9 10 11 12 13 14 15 16 17
(IOM) STAT . . . - . . - - - .  -  -  -  -  -  -  -  -
0     TYPE C C C   C M       M                     S  S
           O O O   O T       P                     C  C
           N N N   N D       C                     S  S
```

4 The next action depends on if terminal controller ports are on the shelf.

If terminal controller ports	Do
are on the shelf	step 5
are not on the shelf	step 10

5 Note the consoles (CONS) ID and status for each port.

If	Do
all ports are ManBsy	step 10
a minimum of one port is Offl	step 55
a minimum of one port is . (dot)	step 6
all ports are in any other out-of-service state	step 8

6 Notify all operating company personnel that you will remove from service the CONS IDs that associate with the card you manually busy. Wait until all operating company personnel terminate the activity of these CONS IDs.

7 To post the port that associates with the CONS you replace, type

>PORT port_no

and press the Enter key.

where

port_no
is the port identification number

Example of an IOM MAP display:

NTFX30
in an ISM (continued)

```
Port   0   Status      Disc
           Cons Id    1CONS
           ConType    VT100
```

8 To manually busy the device, type

>BSY

and press the Enter key.

Example of MAP response:

```
bsy
OK
```

If the BSY command	Do
passed	step 9
failed	step 63

9 Repeat step 8 until all CONS ports are manually busy.

10 The next action depends on if multiprotocol ports (MPC) are on the controller card.

If MPC ports	Do
are on the controller card	step 11
are not on the controller card	step 18

11 To post a port that associates with the MPC, type

>PORT port_no

and press the Enter key.

where

port_no
is the port identification number

Example of an IOM MAP display:

```
Port 9   Unit     1
        User   SYSTEM   PROTOCOL    LINK
       Status  Ready    X2584       COMACT ENABLED
```

12 Determine the state of the port.

If the port state	Do
is ManB	step 17

NTFX30
in an ISM (continued)

If the port state	Do
is OFFL	step 55
is other than listed here	step 13

13 To display status information on current MPC conversations, type

>QCONV

and press the Enter key.

Example of a MAP response:

```
MPC  L  LCN  STATUS   CCC  SEC  PARDEV  INP  OPEN  OWNER
---  -  ---  ------   ---  ---  ------  ---  ----  -----
 0   3   1   INACTIVE none  none  none   FIL   0    none
 0   3   2   INACTIVE none  none  none   FIL   0    none
```

If	Do
a minimum of one session is active	step 14
all sessions are inactive	step 15

14 Notify all users that an interruption of MPC service will occur. Wait until all sessions are inactive before you proceed. To verify MPC session activity, repeat step 13.

15 To manually busy the port and the port links, type

>BSY FORCE

and press the Enter key.

Example of MAP response:

```
TYPE YES TO VERIFY FORCE, NO TO CANCEL COMMAND
Please confirm (“YES”, “Y”, “NO”, or “N”)
```

16 To confirm the command, type

>YES

and press the Enter key.

Example of MAP response:

```
REQUEST PASSED FOR UNIT
REQUEST PASSED FOR LINK
```

If the BSY command	Do
passed	step 17

If the BSY command	Do
failed	step 63

17 Repeat steps 11 to 16 for each MPC port on the IOM.

18 The next action depends on if disk drive ports are on the controller card.

If disk drive ports	Do
are on the shelf	step 19
are not on the shelf	step 24

19 To post a port that associates with the disk drive unit (DDU), type

>PORT port_no

and press the Enter key.

where

port_no
is the port identification number

Example of a IOM MAP display:

```
Port 16  Unit       0
(SCSI)   User       system      Drive_State
         Status     Ready       On_line
```

20 Determine the state of the port.

If the port	Do
is ManB	step 24
is OFFL	step 55
is other than listed here	step 21

21 To determine if open files are on the DDU, type

>ALLOC

and press the Enter key.

Example of a MAP display:

NTFX30
in an ISM (continued)

```
VOLID VOL_NAME SERIAL_NO BLOCKS ADDR TYPE R/O FILES_OPEN
  0   IMAGE     2800     45000  D000  0    NO      0
  1   XPMLOADS  2801     35000  D000  0    NO      0
  2   RTMLOADS  2802     20000  D000  0    NO      0
   .
   .
   .
  7   SMDR      2807     5000   D000  0    NO      0
  8   AMA1      2808     5000   D000  0    NO      0
  9   TST       2809       50   D000  0    NO      0
 10   AMA2      280A      500   D000  0    NO      0
```

If open files	Do
are on the DDU	step 56
are not on the DDU	step 22

22 To manually busy the device on the controller card, type

>BSY

and press the Enter key.

Example of MAP response:

```
bsy
OK
```

23 If a second DDU is on the controller card, repeat steps 19 to 22.

24 The next action depends on if magnetic tape drive (MTD) or digital audio tape (DAT) ports are on the controller card.

If MTD or DAT ports	Do
are on the controller card	step 25
are not on the controller card	step 30

25 To post a port that associates with the MTD or DAT, type

>PORT port_no

and press the Enter key.

where

port_no
is the port identification number

Example of a IOM MAP display:

```
Port 5    MTD                    DevType
        TapeName                 User
        Status        Ready
```

26 Determine the state of the port.

If the port state	Do
is ManB	step 30
is OFFL	step 55
is Idle	step 28
is other than listed here	step 27

27 Notify all users that an interruption of service for the device will occur. Wait until all users cease to access the device before you proceed to the next step.

28 To manually busy the port, type

>BSY

and press the Enter key.

Example of MAP response:

```
bsy
OK
```

29 Repeat steps 25 to 28 for each magnetic tape drive or digital audio port on the controller card.

30 To return to the IOC level of the MAP display, type

>QUIT

and press the Enter key.

31 Determine the state of the IOM.

If the state of the IOM	Do
is M	step 33
is other than listed here	step 32

32 To manually busy the IOM controller card, type

>BSY IOC

and press the Enter key.

Example of MAP response:

NTFX30
in an ISM (continued)

```
bsy
OK
```

At the ISM shelf

33

> **WARNING**
> **Static electricity damage**
> Wear a wrist strap that connects to the wrist-strap grounding point of the modular supervisory panel (MSP) to handle circuit cards. The wrist strap protects the cards against static electricity damage.

To replace the controller card, perform the procedure *Replacing a card* in this document. Complete the procedure and return to this point.

34 Wait for internal diagnostic tests on the card to complete.

Note 1: After you insert the new NTFX30 card, the LED is off for approximately 30 seconds. The color of the LED changes to red and then to green if the internal diagnostic tests pass. The internal diagnostic tests take less than 2 minutes.

Note 2: You view the LED through a small plastic window on the card faceplate.

35 To list the IOM load file, type

`>DISKUT;LF VOLUME`

and press the Enter key.

36 To access the TOOLSUP control, type

`>TOOLSUP`

and press the Enter key.

37 To access the UPGIOM tool, type

`>ACCESS ON UPGIOM`

and press the Enter key.

Note: The command response asks for a password. To obtain the password, call Northern Telecom. Use the password to enter.

NTFX30
in an ISM (continued)

38

DANGER
How to download IOM load file
This command downloads the complete IOM load file as specified in the parameter. The command provides reprogramming options for the flash.

To reprogram the IOM flash ROM on the new controller card, type

>UPGIOM file_name RPGM

and press the Enter key.

where

file_name
is the IOM load file

Note: RPGM is the optional parameter that indicates if the system specifies the reprogramming option

Example input

>UPGIOM IOMRAA01 RPGM

Example of MAP response:

```
WARNING:  This command will reprogram the onboard IOM
Flash memory.  Proceed with caution.

Reprogramming 100%
Reprogram IOC 14 successful
```

If the reprogram	Do
passes	step 41
fails	step 39

NTFX30
in an ISM (continued)

At the ISM shelf

39

WARNING
Static electricity damage
Wear a wrist strap that connects to the wrist-strap grounding point of the MSP to handle circuit cards. The wrist strap protects the cards against static electricity damage.

To replace the failed controller card, perform the procedure *Replacing a card* in this document. Complete the procedure and return to this point.

Note: If the card that you replace has switches, make sure that the switches on the replacement card have the same settings.

40

DANGER
How to download IOM load file
This command downloads the complete IOM load file as specified in the parameter. The command also provides reprogramming options for the flash.

To reprogram the IOM flash ROM on the new controller card, type

```
>UPGIOM  file_name  RPGM
```

and press the Enter key.

where

file_name
is the IOM load file

Note: RPGM is the optional parameter that indicates if the system specifies the reprogramming option

Example input

```
>UPGIOM IOMRAA01 RPGM
```

Example of MAP response:

NTFX30
in an ISM (continued)

```
WARNING:  This command will reprogram the onboard IOM
Flash memory.  Proceed with caution.

Reprogramming 100%
Reprogram IOC 14 successful
```

If the reprogram	Do
passes	step 41
fails	step 63

41 To quit the TOOLSUP utility, type

>QUIT

and press the Enter key.

42 The next action depends on the reason that you perform this procedure.

If a maintenance procedure	Do
directed you to this procedure	step 43
did not direct you to this procedure	step 44

43 Return to the maintenance procedure that directed you to this procedure. Continue as directed by the maintenance procedure..

At the MAP terminal

44 To return the IOM to service, type

>RTS IOC

and press the Enter key.

45 The next action depends on if consoles, disk drives, magnetic tape drives or DAT tape ports are present.

If console, disk drive, magnetic drive or DAT ports	Do
are present	step 46
are not present	step 49

46 To post the device port, type

>PORT port_no

and press the Enter key.

where

NTFX30
in an ISM (continued)

port_no
is the port identification number (0 to 17)

47 To return the port to service, type

>RTS

and press the Enter key.

If RTS command	Do
passes	step 48
fails	step 63

48 Repeat steps 46 and 47 for each disk drive, magnetic tape drive or DAT tape port.

49 The next action depends on if MPC ports are present.

If MPC ports	Do
are present	step 50
are not present	step 64

50 To post the MPC port, type

>PORT port_no

and press the Enter key.

where

port_no
is the port identification number (0 to 17)

51 To return the MPC port to service, type

>RTS

and press the Enter key.

Example of MAP response:

```
REQUEST PASSED FOR UNIT
REQUEST PASSED FOR LINKS
```

If RTS command	Do
passes	step 52
fails	step 63

NTFX30
in an ISM (continued)

52 Check the status of MPC components

If	Do
the system status is Ready, the port status is COMACT, and the link status is ENABLED for each link.	step 50
status of MPC components is other than listed here	step 63

53 Repeat steps 50 to 52 for each port on the shelf.

54 Notify users that MPC service is available.

55 To determine why the component is offline, consult operating company personnel. Continue as directed by operating company personnel.

56

> **WARNING**
> **Loss of data**
> If files are open do not busy the controller. If you busy the controller while files are open, billing data will be lost. For additional help, contact the next level of support.

If device independent recording package (DIRP) volumes are open, the following events occur:

- the DDU drops SysB
- billing data is lost
- open Logutil files are lost or corrupted

Before starting card replacement procedures, close the DIRP volumes. Close files from DIRP and demount active volumes from the DDU. Use the procedure, “Deallocating Recording Volumes in the DIRP Utility" in *Routine Maintenance Procedures*.

57 Stop files recording to and from the Logutil. Type the following command at the Logutil command level:

```
>LOGUTIL;LISTDEVS
```

and press the Enter key.

58 Close files on volumes on the DDU of the IOC.

```
>STODEV  dev_name
```

and press the Enter key.

where

dev_name
is the name of the device

```
>QUIT
```

NTFX30
in an ISM (end)

and press the Enter key.

59 Repeat the ALLOC command to determine if files are closed, by typing

>ALLOC

and pressing the Enter key.

If the files	Do
are open	step 60
are closed	step 61

60 Confirm that you have done steps 56 to 59. If the files are still open, contact your next level of support.

61 Manually busy the DDU, by typing

>BSY

and pressing the Enter key.

If the DDU	Do
is MBSY	step 62
is not MBSY	step 63

62 When cards are replaced and the DDU is in service, open the files. Use the procedure “Allocating Recording Volumes in the DIRP Utility" in *Routine Maintenance Procedures*.

63 For additional help, contact the next level of support.

64 The procedure is complete.

NTFX31 in an ISM

Application

Use this procedure to replace an NTFX31 paddle board assembly in an input/output module (IOM) in an integrated services module (ISM) shelf.

PEC	Suffix	Card name	Shelf or frame name
NTFX31	AA	Paddle board assembly	ISM

Refer to the Index, if you cannot identify one of the following features for the card that you want to replace:

- product engineering code (PEC)
- PEC suffix
- equipped frame
- equipped shelf

The Index contains a list of the cards, shelves, and frames that this card replacement book documents.

Common procedures

This procedure refers to the common procedure *Replacing a card*.

Do not go to the common procedure unless the step-action procedure directs you to go.

Action

This procedure contains a summary flowchart and a list of steps. Use the flowchart to review the procedure. Follow the steps to perform the procedure.

NTFX31 in an ISM (continued)

Summary of replacing a NTFX31 in an ISM

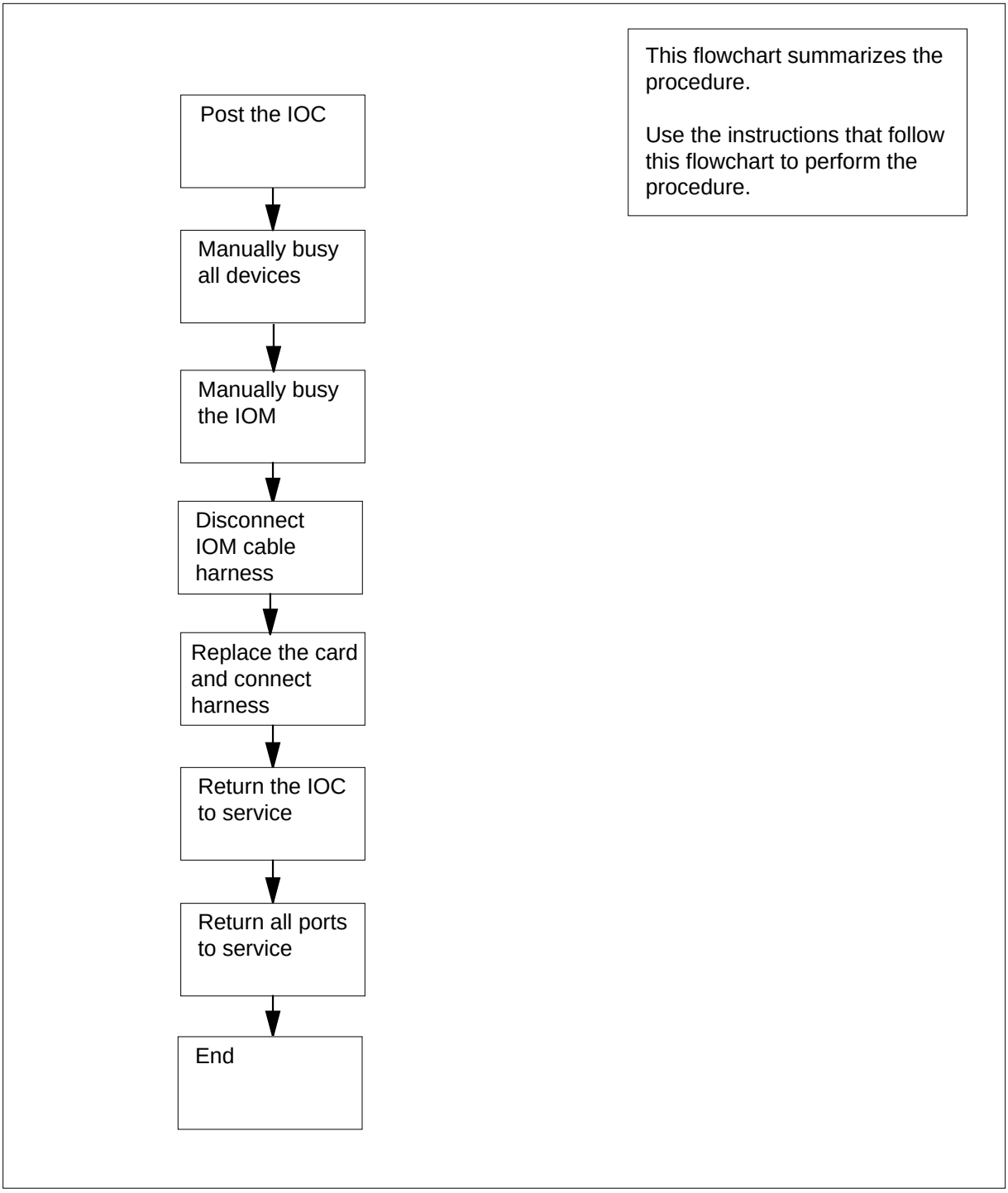

NTFX31
in an ISM (continued)

NTFX31 in an ISM

ATTENTION

This procedure directs you to manually busy the controller card for the IOM. Perform this procedure from a MAP terminal that does not connect to the IOM.

WARNING

Loss of service

This procedure instructs you to remove the paddle board for the IOM. Perform this procedure only if you need to recover out-of-service components. Unless it is urgent, perform this procedure during periods of low traffic only.

At the MAP terminal

1 Obtain a replacement card. Make sure that the replacement card and the card that you remove have the same PEC and PEC suffix.

At the MAP terminal

2 To access the IOD level of the MAP display, type

>MAPCI;MTC;IOD

and press the Enter key.

Example of a MAP display:

```
IOD
IOC  0  1  2  3
STAT .  .  .  S

DIRP: SMDR B XFER:   .   SLM :   .   NPO:   .   NX25:  .
MLP :   .    DPPP:   .   DPPU:   .   SCAI :
```

3 To post the configured IOM controller, type

>IOC ioc_no

and press the Enter key.

where

ioc_no
is the IOM identification number

Example of an IOM MAP display:

NTFX31
in an ISM (continued)

```
IOD
IOC  0  1  2  3
STAT .  .  .  S

DIRP: SMDR B XFER:   .   SLM :   .   NPO:   .   NX25:  .
MLP :   .    DPPP:   .   DPPU:   .   SCAI :

IOC   PORT 0 1 2 3 4 5 6 7 8 9 10 11 12 13 14 15 16 17
(IOM) STAT . . . - . . - - - .  -  -  -  -  -  -  -  -
0     TYPE C C C   C M       M                     S  S
           O O O   O T       P                     C  C
           N N N   N D       C                     S  S
```

4 The next action depends on if terminal controller ports are on the shelf.

If terminal controller ports	Do
are on the shelf	step 5
are not on the shelf	step 10

5 Note the consoles (CONS) ID and status for each port.

If	Do
all ports are ManBsy	step 9
a minimum of one port is Offl	step 65
a minimum of one port is (.) dot	step 6
all ports are in any other out-of- service state	step 8

6 Notify all operating company personnel that you will remove from service the CONS IDs that associate with the controller card that you manually busy. Wait until all operating company personnel terminate activity for these CONS IDs.

7 To post the port that associates with the CONS that you replace, type

>PORT port_no

and press the Enter key.

where

port_no
is the port identification number

Example of an IOM MAP display:

NTFX31
in an ISM (continued)

```
Port   2   Status      Disc
           Cons Id    1CONS
           ConType    VT100
```

8 To manually busy the device, type

>BSY

and press the Enter key.

Example of MAP response:

```
bsy
OK
```

If the BSY command	Do
passed	step 9
failed	step 66

9 Repeat step 7 and 8 until all CONS ports are manually busy.

10 The next action depends on if multiprotocol ports (MPC) are on the controller card.

If MPC ports	Do
are on the controller card	step 11
are not on the controller card	step 18

11 To post a port that associates with the MPC, type

>PORT port_no

and press the Enter key.

where

port_no
is the port identification number

Example of an IOM MAP display:

```
Port 9   Unit     1
        User   SYSTEM   PROTOCOL    LINK
       Status  Ready    X2584       COMACT ENABLED
```

12 Determine the state of the port.

If the port	Do
is ManB	step18

NTFX31
in an ISM (continued)

If the port	Do
is OFFL	step 65
is other than listed here	step13

13 To display status information on current MPC conversations, type

>QCONV

and press the Enter key.

Example of a MAP response:

```
MPC  L  LCN  STATUS   CCC  SEC  PARDEV  INP  OPEN  OWNER
---  -  ---  ------   ---  ---  ------  ---  ----  -----
 0   3   1  INACTIVE  none  none  none   FIL   0    none
 0   3   2  INACTIVE  none  none  none   FIL   0    none
```

If	Do
a minimum of one session is active	step14
all sessions are inactive	step15

14 Notify all users that an interruption of MPC service will occur. Wait until all sessions are inactive before you proceed. To verify MPC session activity, repeat step 13.

15 To manually busy the port and port links, type

>BSY FORCE

and press the Enter key.

Example of a MAP response:

```
TYPE YES TO VERIFY FORCE, NO TO CANCEL COMMAND
Please confirm ("YES", "Y", "NO", or "N")
```

16 To confirm the command, type

>YES

and press the Enter key.

Example of MAP response:

```
REQUEST PASSED FOR UNIT
REQUEST PASSED FOR LINK
```

If the BSY command	Do
passed	step 17

If the BSY command	Do
failed	step 66

17 Repeat steps 11 to 16 for each MPC port on the IOM.

18 The next action depends on if disk drive unit (DDU) ports are on the controller card.

If DDU ports	Do
are on the shelf	step 19
are not on the shelf	step 24

19 To post a port that associates with the DDU, type

>PORT port_no

and press the Enter key.

where

port_no
is the port identification number

Example of an IOM MAP display:

```
Port 16  Unit       0
(SCSI)   User       system      Drive_State
         Status     Ready       On_line
```

20 Determine the state of the port.

If the port	Do
is ManB	step 24
is OFFL	step 65
is other than listed here	step 21

21 To determine if open files are on the DDU, type

>ALLOC

and press the Enter key.

Example of a MAP display:

NTFX31
in an ISM (continued)

```
VOLID VOL_NAME SERIAL_NO BLOCKS ADDR TYPE R/O FILES_OPEN
  0   IMAGE     2800     45000  D000  0    NO      0
  1   XPMLOADS  2801     35000  D000  0    NO      0
  2   RTMLOADS  2802     20000  D000  0    NO      0
    .
    .
    .
  7   SMDR      2807     5000   D000  0    NO      0
  8   AMA1      2808     5000   D000  0    NO      0
  9   TST       2809       50   D000  0    NO      0
 10   AMA2      280A      500   D000  0    NO      0
```

If open files	Do
are on the DDU	step 57
are not on the DDU	step 22

22 To manually busy the device on the controller card, type

>BSY

and press the Enter key.

Example of MAP response:

```
bsy
OK
```

23 Repeat steps 19 to 22 if a second DDU is on the controller card.

24 The next action depends on if magnetic tape drive (MTD) or digital audio tape (DAT) ports are on the controller card.

If MTD or DAT ports	Do
are on the controller card	step 25
are not on the controller card	step 30

25 To post a port that associates with the MTD or DAT, type

>PORT port_no

and press the Enter key.

where

port_no
is the port identification number

Example of an IOM MAP display:

NTFX31
in an ISM (continued)

```
Port 5    MTD                    DevType
         TapeName                User
         Status        Idle
```

26 Determine the state of the port.

If the port	Do
is ManBsy	step 29
is OFFL	step 65
is Idle	step 28
is other than listed here	step 27

27 Notify all users that an interruption of service for the device will occur. Wait until all users cease to access the device before you proceed to the next step.

28 To manually busy the device, type

>BSY

and press the Enter key.

Example of MAP response:

```
bsy
OK
```

29 Repeat steps 25 to 28 for each MTD device or DAT on the IOM.

30 To return to the IOC level of the MAP display, type

>QUIT

and press the Enter key.

31 Determine the state of the IOM.

If the state of the IOM	Do
is M	step 33
is other than listed here	step 32

32 To manually busy the IOM controller card, type

>BSY IOC

and press the Enter key.

Example of MAP response:

```
bsy
OK
```

NTFX31
in an ISM (continued)

At the front of the ISM shelf

33

> **WARNING**
> **Static electricity damage**
> Wear a wrist strap that connects to the wrist-strap grounding point of the modular supervisory panel (MSP) to handle circuit cards. The wrist strap protects the cards against static electricity damage.

Unseat the IOM controller card NTFX30 in slot 3 or 4 of the ISM shelf.

34 If the media storage card NTFX32 is equipped, unseat the card. The card is in slots 4 and 5.

At the rear of the ISM shelf

35

> **WARNING**
> **Static electricity damage**
> Wear a wrist strap that connects to the wrist-strap grounding point of MSP to handle circuit cards. The wrist strap protects the cards against static electricity damage.

Locate the paddle board assembly in slot 03 or 04 on the backplane. Note the numbers and positions of the connectors on the harness from the paddle board. Detach the connectors on the harness from the paddle board.

Disconnect the cable harness that connects the paddle board to the DDU/DAT connector on the backplane.

NTFX31
in an ISM (continued)

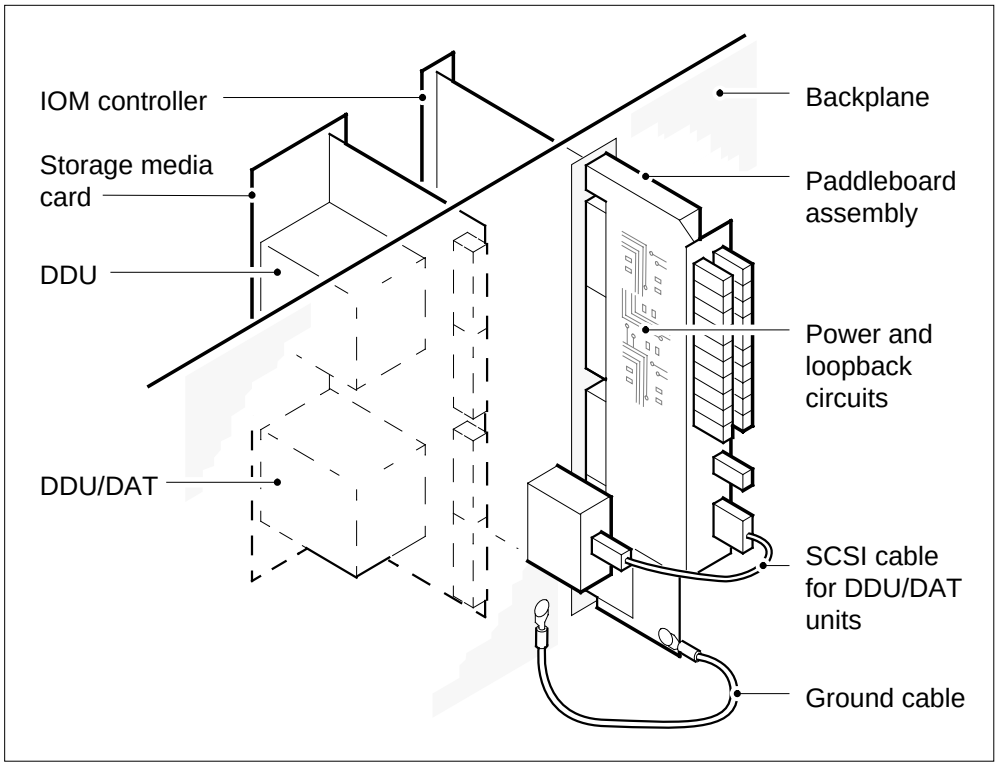

36 Locate the paddle board ground cable. Disconnect at the backplane end of the cable. Refer to the diagram in step 35.

37 To replace the paddle board assembly in slots 03 or 04, remove the bolts that secure the paddle board bracket to the backplane. Secure the paddle board assembly in position with screws and washers. Refer to the diagram in step 35.

38 Connect the paddle board ground cable. Refer to the diagram in step 35.

39 Connect the connectors on the cable harness to the receptacles on the paddleboard assembly and the DDU/DAT connector on the backplane. Make sure that the names on the cable connectors match the names on the paddle board.

40 Connect the cable harness to the DDU/DAT connector on the backplane.

NTFX31
in an ISM (continued)

At the front of the ISM shelf

41

> **WARNING**
> **Static electricity damage**
> Wear a wrist strap that connects to the wrist-strap grounding point of the MSP to handle circuit cards. The wrist strap protects the cards against static electricity damage.

Reseat the NTFX32 card that you unseated in step 34.

Note 1: After you reseat the NTFX32 card, both LEDs on the faceplate must be on.

Note 2: You view the LED through a plastic window (light pipe) on the card faceplate.

42 Reseat the NTFX30 card that you unseated in step 33.

43 Wait for internal diagnostic tests on the NTFX30 card to complete.

Note 1: After you reseat the NTFX30 card, the LED is off for approximately 30 seconds. The color of the LED changes to red and then to green if the internal diagnostic tests pass. The internal diagnostic tests take less than 2 minutes.

Note 2: You view the LED through a small plastic window on the card faceplate.

44 The next action depends on the reason that you perform the procedure.

If a maintenance procedure	Do
directed you to this procedure	step 45
did not direct you to this procedure	step 46

45 Return to the maintenance procedure that directed you to this procedure. Continue as directed by the maintenance procedure.

At the MAP terminal

46 To return the IOM to service, type

>RTS IOC

and press the Enter key.

47 The next action depends on if consoles, disk drives, MTDs, or DAT tape ports are present.

If consoles, disk drives, MTDs, or DAT ports	Do
are present	step 48

NTFX31
in an ISM (continued)

If consoles, disk drives, MTDs, or DAT ports	Do
are not present	step 51

48 To post the device port, type

>PORT port_no

and press the Enter key.

where

port_no
is the port identification number (0 to 17)

49 To return the port to service, type

>RTS

and press the Enter key.

If the RTS command	Do
passes	step 50
fails	step 66

50 Repeat steps 48 and 49 for each disk drive, MTD, or DAT tape port.

51 The next action depends on if MPC ports are present.

If MPC ports	Do
are present	step 52
are not present	step 67

52 To post the MPC port, type

>PORT port_no

and press the Enter key.

where

port_no
is the port identification number (0 to 17)

53 To return the MPC port to service, type

>RTS ALL

and press the Enter key.

Example of a MAP response:

```
REQUEST PASSED FOR PORT
REQUEST PASSED FOR LINKS
```

NTFX31
in an ISM (continued)

54 Check the status of MPC components.

If	Do
the system status is Ready, the port status is COMACT, and the link status the system status is ENABLED for each link.	step 55
the status of MPC components is other than listed here	step 66

55 Repeat steps 52 to 54 for each port on the shelf.

56 Notify users that MPC service is available.

57

> **WARNING**
> **Loss of data**
> If files are open do not busy the controller. If you busy the controller while files are open, billing data will be lost. For additional help, contact the next level of support.

If device independent recording package (DIRP) volumes are open, the following events occur:

- the DDU drops SysB
- billing data is lost
- open Logutil files are lost or corrupted

Before starting card replacement procedures, close the DIRP volumes. Close files from DIRP and demount active volumes from the DDU. Use the procedure, “Deallocating Recording Volumes in the DIRP Utility" in *Routine Maintenance Procedures*.

58 Stop files recording to and from the Logutil. Type the following command at the Logutil command level:

`>LOGUTIL;LISTDEVS`

and press the Enter key.

59 Close files on volumes on the DDU of the IOC.

`>STOPDEV dev_name`

and press the Enter key.

where

dev_name
is the name of the device

NTFX31
in an ISM (end)

60 To quit the disk utility, type

>QUIT

and press the Enter key.

61 Repeat the ALLOC command to determine if files are closed, by typing

>ALLOC

and pressing the Enter key.

If the files	Do
are open	step 62
are closed	step 63

62 Confirm that you have done steps 57 to 61. If the files are still open, contact your next level of support.

63 Manually busy the DDU, by typing

>BSY

and pressing the Enter key.

If the DDU is	Do
MBSY	step 64
not MBSY	step 66

64 When cards are replaced and the DDU is in service, open the files. Use the procedure “Allocating Recording Volumes in the DIRP Utility" in *Routine Maintenance Procedures*.

65 To determine why the component is offline, consult operating company personnel. Continue as directed by operating company personnel.

66 For additional help, contact the next level of support.

67 The procedure is complete.

NTFX32AA in an ISM

Application

Use this procedure to replace an NTFX32AA storage media card in the shelves or frames identified in the following table.

PEC	Suffixes	Card name	Shelf/frame name
NTFX32	AA	Storage media card	ISM

To replace an NTFX32BA (3.5-in. disk drive unit) and an NTFX32CA (digital audio tape unit) see *Trouble Locating and Clearing Procedures*.

Refer to the Index, if you cannot identify one of the following features for the card that you want to replace:

- product engineering code (PEC)
- PEC suffix
- equipped frame
- equipped shelf

The Index contains a list of the cards, shelves, and frames that this card replacement NTP documents.

Common procedures

This procedure refers to the common procedure *Replacing a card*.

Action

This procedure contains a summary flowchart and a list of steps. Use the flowchart to review the procedure. Follow the steps to perform the procedure.

NTFX32AA in an ISM (continued)

Summary of replacing an NTFX32AA in an ISM

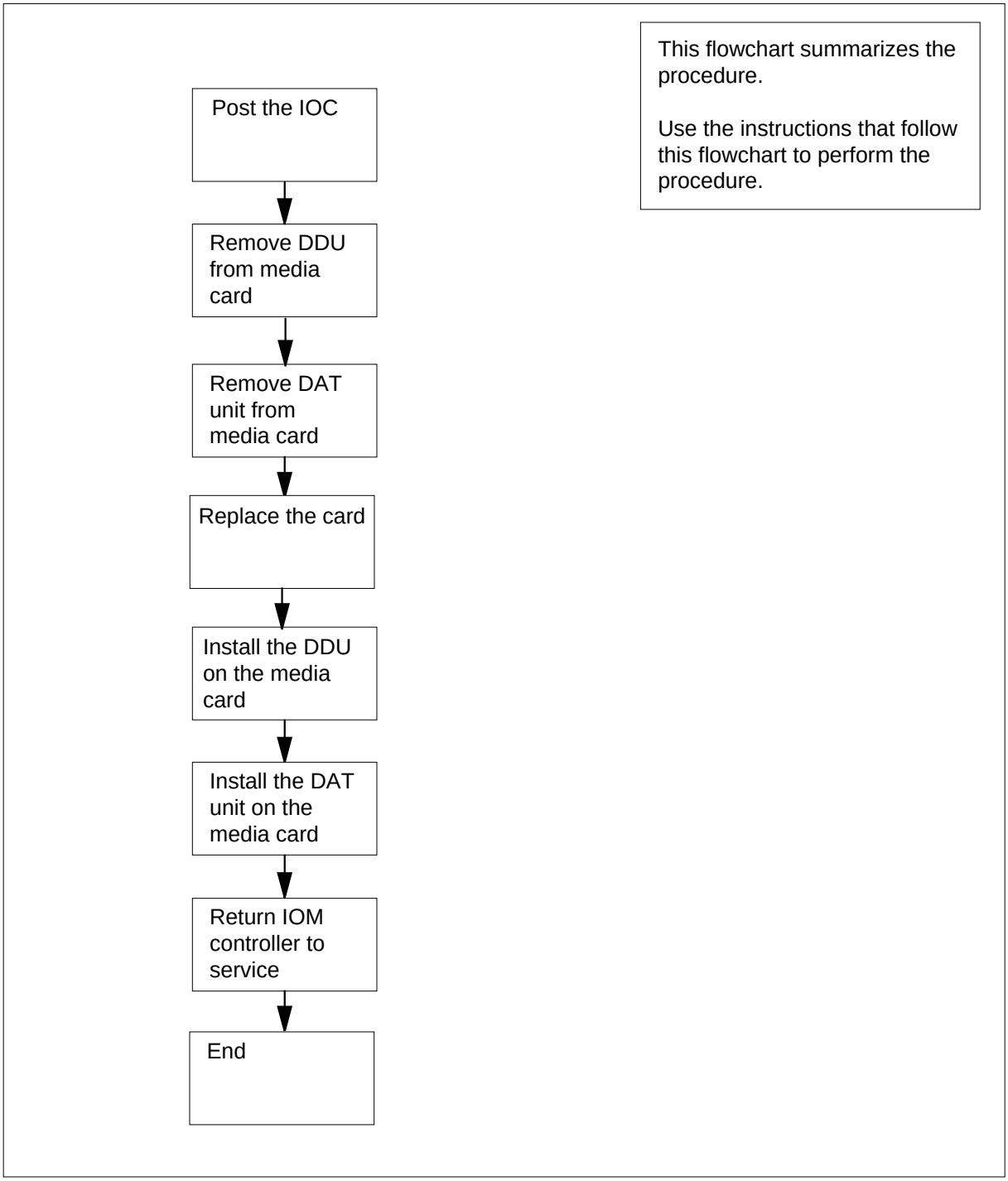

NTFX32AA
in an ISM (continued)

NTFX32AA in an ISM

At the MAP terminal

1 Obtain a replacement card. Make sure that the replacement card and the card that you remove have the same PEC and PEC suffix.

2 To access the IOD level of the MAP display, type

>MAPCI;MTC;IOD

and press the Enter key.

Example of a MAP display:

```
IOD
IOC  0  1  2  3
STAT .  .  .  S

DIRP: SMDR B XFER:   .   SLM :   .   NPO:   .   NX25:  .
MLP :   .    DPPP:   .   DPPU:   .   SCAI :
```

3 To post the IOM controller system configured, type

>IOC ioc_no

and press the Enter key.

where

ioc_no
is the IOM identification number

Example of an IOM MAP display:

```
IOD
IOC  0  1  2  3
STAT .  .  .  S

DIRP: SMDR B XFER:   .   SLM :   .   NPO:   .   NX25:  .
MLP :   .    DPPP:   .   DPPU:   .   SCAI :

IOC   PORT 0 1 2 3 4 5 6 7 8 9 10 11 12 13 14 15 16 17
(IOM) STAT . . . – . . – – – .  –  –  –  –  –  –  –  –
0     TYPE C C C   C M       M                    S  S
           O O O   O T       P                    C  C
           N N N   N D       C                    S  S
```

NTFX32AA
in an ISM (continued)

4 The next action depends on if a 3.5-in. disk drive unit (DDU)NTFX32 BA or a digital audio tape (DAT) unit NTFX32CA is on the media storage card.

If the media storage card	Do
contains a 3.5-in. DDU	step 5
contains a DAT unit	step 6

At the ISM shelf

5 To remove the 3.5-in. DDU, perform the correct procedure in *Trouble Locating and Clearing Procedures*. Complete the section of the procedure to remove the disk drive and return to this point.

6 To remove the DAT unit, perform the correct procedure in *Trouble Locating and Clearing Procedures*. Complete the section of the procedure to remove the tape unit and return to this point.

7 To replace the media storage card, perform the procedure *How to replace a card*. Complete the procedure and return to this point.

If the media storage card	Do
contains a 3.5-in. DDU	step 8
contains a DAT unit	step 9

8 To install the 3.5-in. DDU unit that you removed in step 6, perform the correct procedure in *Trouble Locating and Clearing Procedures*. Complete the section of the procedure to remove the disk drive and return to this point.

9 To install the DAT unit that you removed in step 6, perform the correct procedure in *Trouble Locating and Clearing Procedures*. Complete the section of the procedure to remove the tape unit and return to this point.

10 The next action depends on the reason that you perform this procedure.

If a maintenance procedure	Do
directed you to this procedure	step11
did not direct you to this procedure	step12

11 Return to the maintenance procedure that directed you to this procedure. Continue as directed by the maintenance procedure.

At the MAP terminal

12 To return the IOM to service, type

>RTS

and press the Enter key.

13 For additional help, contact the next level of support.

NTFX32AA
in an ISM (end)

14 The procedure is complete.

System cards in an IOC

Application

Use this procedure to replace the following cards in an input/output controller (IOC).

PEC	Suffix	Card name	Shelf or frame name
NT0X67	AA	IOC terminator card	IOC
NT1X62	AA	Input/output controller card	IOC
NT1X62	AB	IOC message controller card	IOC
NT1X62	CA, CB	IOC message processor card	IOC

Refer to the Index, if you cannot identify one of the following features for the card that you want to replace:

- product engineering code (PEC)
- PEC suffix
- equipped frame
- equipped shelf

The Index contains a list of the cards, shelves, and frames that this card replacement book documents.

Common procedures

This procedure refers to the common procedure *Replacing a card*.

Do not go to the common procedure unless the step-action procedure directs you to go.

Action

This procedure contains a summary flowchart and a list of steps. Use the flowchart to review the procedure. Follow the steps to perform the procedure.

System cards in an IOC (continued)

Summary of replacing System cards in an IOC

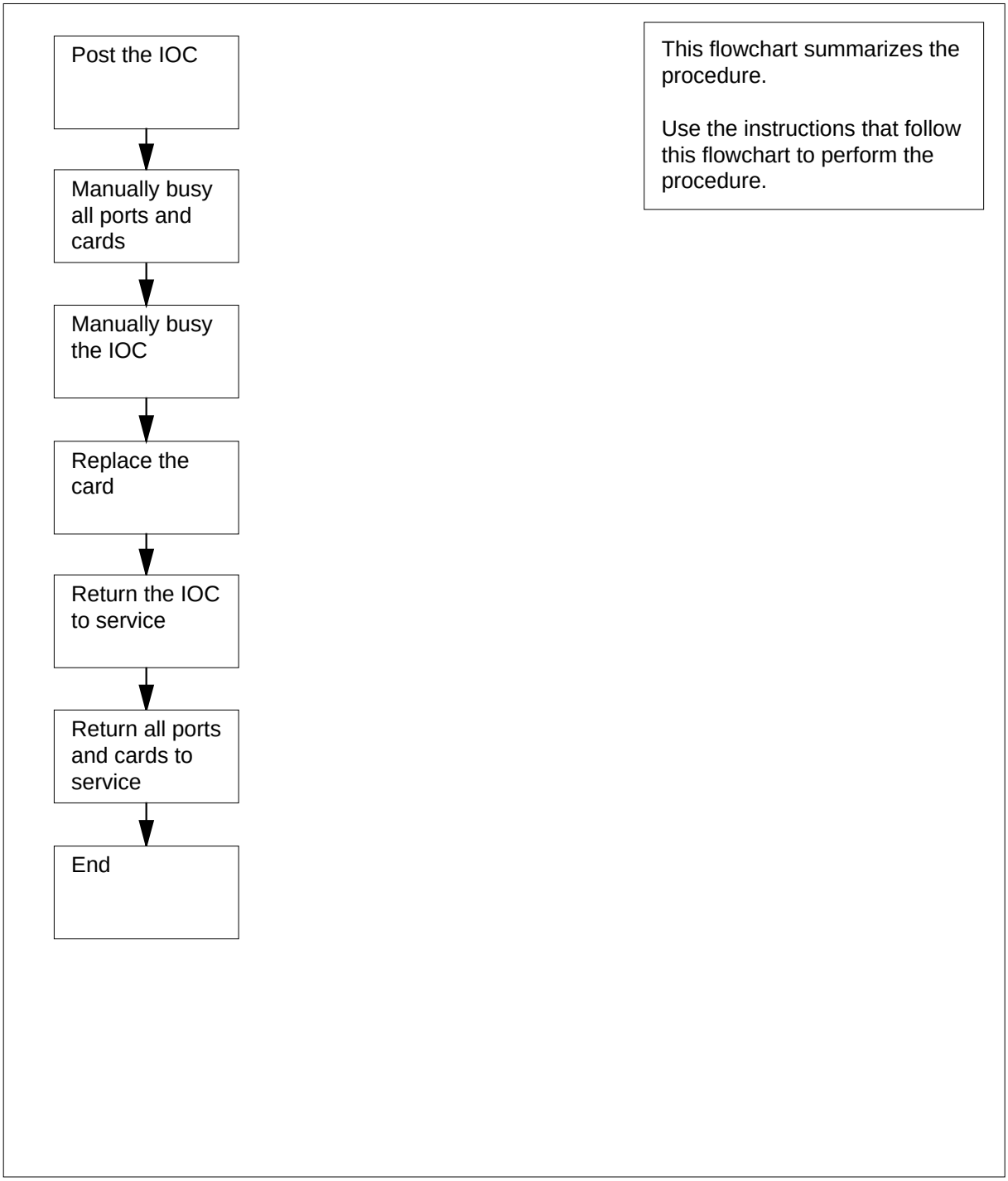

System cards in an IOC (continued)

System cards in an IOC

At the MAP terminal

1

> **ATTENTION**
> This procedure directs you to manually busy all terminal controller cards for the IOC. Perform this procedure from a MAP terminal that does not connect to the IOC.

> **WARNING**
> **Loss of service**
> This procedure instructs you to remove an IOC and the device controllers of an IOC from service. Perform this procedure only if you need to recover out-of-service components. Unless it is urgent, perform this procedure during periods of low traffic.

Obtain a replacement card. Make sure that the replacement card and the card that you remove have the same PEC and PEC suffix.

2 To access the IOD level of the MAP display, type

`>MAPCI;MTC;IOD`

and press the Enter key.

Example of a MAP display:

```
IOC  0  1  2  3
STAT .  .  .  .
```

3 To post the IOC that associates with the card you replace, type

`>IOC  ioc_no`

and press the Enter key.

where

ioc_no
is the IOC identification number (0 to 19)

Example of a MAP display:

System cards in an IOC (continued)

```
IOC  0  1  2  3
STAT .  .  .  .

DIRP: POOL07 XFER:   .    SLM   .    NOP :   .    NX25:   .
MLP :   .    DPPP:   .  DPPU:   .    SCAI:   .

IOC CARD 0     1     2     3    4     5     6     7     8
0 PORT  0123  0123  0123  01230123  0123  0123  0123  0123
  STAT  ----  .---  ...-.---  ....  .---  -.-.  .---  ....
  TYPE        DDU  CONS  MPC   CONS  MPC   CONS  MPC   CONS
```

4 The next action depends on if terminal controller cards are on the shelf.

If terminal controller cards	Do
are on the shelf	step 5
are not on the shelf	step 11

5 To post the card, type

>CARD card_no

and press the Enter key.

where

card_no
is the card identification number (0 to 8)

Example of a MAP display:

```
IOD
IOC  0  1  2  3
STAT .  .  .  .

DIRP: AMA  B XFER:   .   SLM : SLMbsy NOP :   .    NX25:   .
MLP :   .    DPPP:   .     DPPU:   .    SCAI:   .

IOC   CARD    0     1     2     3   4     5     6     7     8
 0    PORT  0123  0123  0123  01230123  0123  0123  0123  0123
      STAT  .---  .---  .....---  ....  ----  ..--  .---  ----
      TYPE  MTD   DDU    CONS  MPC   CONS        CONS  MPC
Card   6   Ckt      0         1         2         3
Status             .         .         -         -
Cons Id          RD040     RD041     TEAM4     TEAM6
ConType          VT100     VT100     VT100     VT100
```

6 Note the CONS ID and the status for each port.

If	Do
all ports are `ManBsy`	step 10

System cards in an IOC (continued)

If	Do
a minimum of one port is `Offl`	step 61
a minimum of one port is `.` (dot)	step 7
all ports are in any other out-of-service state	step 8

7 Notify all operating company personnel that you will remove from service all CONS IDs that associate with the card you manually busy. Wait until all operating company personnel terminate the activity of these CONS IDs.

8 To manually busy a port on the card, type

>BSY port_no

and press the Enter key.

where

port_no
is the port identification number (0 to 3)

If the BSY command	Do
passed	step 9
failed	step 62

9 Repeat step 8 until you manually busy all ports on the card. Go to step 10.

10 Repeat steps 5 to 9 for each terminal controller card on the shelf. Go to step 11.

11 The next action depends on if multiprotocol controller (MPC) cards are on the shelf.

If MPC cards	Do
are on the shelf	step 12
are not on the shelf	step 19

12 To post the card, type

>CARD card_no

and press the Enter key.

where

card_no
is the card identification number (0 to 8)

Example of a MAP display:

System cards in an IOC (continued)

```
IOD
IOC  0  1  2  3
STAT .  .  .  .

DIRP: AMA  B XFER:   .       SLM : SLMbsy NOP :   .    NX25:   .
MLP :   .    DPPP:   .       DPPU:   .    SCAI:   .

IOC   CARD    0     1     2     3   4     5     6     7     8
 0    PORT  0123  0123  0123  01230123  0123  0123  0123  0123
      STAT  .---  .---  .....---  ....  ----  ..--  .---  ----
      TYPE  MTD   DDU   CONS  MPC   CONS        CONS  MPC
Card 3 Unit          0
       User      SYSTEM    BOARD  LINK0  LINK1  LINK2   LINK3
       Status      Ready   COMACT UNEQ   N/A    UNEQ    ENABLD
```

13 Determine the state of the card.

If the card state	Do
is `MANB`	step 18
is `OFFL`	step 61
is other than listed here	step 14

Note: The card state appears under the BOARD header on the MAP display.

14 To display status information on current MPC conversations, type

`>QCONV`

and press the Enter key.

Example of a MAP response:

```
MPC  L  LCN  STATUS   CCC  SEC  PARDEV  INP  OPEN OWNER
 --- -  --- --------- ---- ---- ------  ---- ---- -----
   0 3    1 INACTIVE  none none none    FIL    0  none
  0  3   2 INACTIVE  none none none     FIL    0  none
```

If	Do
a minimum of one session is active	step 15
all sessions are inactive	step 16

15 Notify all users that an interruption of MPC service will occur. Wait until all sessions are inactive before you proceed. To verify MPC session activity, repeat step 14.

System cards in an IOC (continued)

16 To manually busy the card and card links, type

>BSY ALL FORCE

and press the Enter key.

Example of a MAP response:

```
TYPE YES TO VERIFY FORCE, NO TO CANCEL COMMAND
Please confirm ("YES", "Y", "NO", or "N"):
```

17 To confirm the command, type

>YES

and press the Enter key.

Example of a MAP response:

```
REQUEST PASSED FOR LINKS.
REQUEST PASSED FOR CARD.
```

If the BSY command	Do
passed	step 18
failed	step 62

18 Repeat steps 12 to 17 for each MPC card on the shelf. Go to step 19.

19 The next action depends on if disk drive controller cards are on the shelf.

If disk drive controller cards	Do
are on the shelf	step 20
are not on the shelf	step 25

20 To post the card, type

>CARD card_no

and press the Enter key.

where

card_no
is the card identification number (0 to 8)

Example of a MAP display:

System cards in an IOC (continued)

```
IOD
IOC  0  1  2  3
STAT .  .  .  .

DIRP: AMA  B XFER:   .      SLM : SLMbsy NOP :   .    NX25:
MLP :   .    DPPP:   .      DPPU:   .    SCAI:   .


IOC   CARD    0     1     2     3 4     5     6     7     8
 0    PORT  0123  0123  0123  0123  0123  0123  0123  0123  0123
      STAT  .---  .---  ....---  ....  ----  ..--  .---  ----
      TYPE  MTD   DDU CONS  MPC   CONS        CONS  MPC

        Card 0   MTD           0
                 TapeName
                 Status     Idle
                  User
```

21 Determine the state of the card.

If the card	Do
is MBSY	step 24
is OFFL	step 61
is other than listed here	step 22

22 To determine if files are open on the DDU, type

>ALLOC

and press the Enter key.

Example of a MAP response:

```
VOLID  VOL_NAME  SERIAL_NO  BLOCKS  ADDR  TYPE  R/O  FILES_OPEN
 0    IMAGE        2800     45000  D000    0    NO       0
 1    XPMLOADS     2801     35000  D000    0    NO       0
 2    RTMLOADS     2802     20000  D000    0    NO       0
   .
   .
   .
 7    SMDR         2807    5000  D000    0     NO       0
 8    AMA1         2808    5000  D000    0     NO       0
 9    TST          2809      50  D000    0     NO       0
10    AMA2         280A       500D000    0     NO       0
```

If files	Do
are open	step 54
are closed	step 23

System cards in an IOC (continued)

23 To manually busy the controller, type

>BSY

and press the Enter key.

Example of a MAP response:

```
bsy
OK
```

24 Repeat steps 20 to 23 for each disk drive controller card on the shelf. Go to step 25.

25 The next action depends on if magnetic tape drive (MTD) controller cards are on the shelf.

If MTD controller cards	Do
are on the shelf	step 26
are not on the shelf	step 31

26 To post the card, type

>CARD card_no

and press the Enter key.

where

card_no
is the card identification number (0 to 8)

Example of a MAP display:

```
IOD
IOC  0  1  2  3
STAT .  .  .  .

DIRP: AMA  B XFER:   .     SLM : SLMbsy NOP :   .    NX25:   .
MLP :   .    DPPP:   .       DPPU:   .    SCAI:   .


IOC   CARD    0     1     2     3  4     5     6     7     8
 0    PORT  0123  0123  0123  0120123  0123  0123  0123  0123
     STAT  .---  .---  .....---  ....  ----  ..--  .---  ----
     TYPE  MTD   DDU   CONS  MPC   CONS        CONS  MPC

 Card 0   MTD           0
          TapeName
          Status     Idle
           User
```

System cards in an IOC (continued)

27 Determine the state of the card.

If the card	Do
is `ManBsy`	step 30
is `Offl`	step 61
is `Idle`	step 29
is other than listed here	step 28

28 Notify all users an interruption of service for the device will occur. Wait until all users cease to access the device before you proceed to the next step.

29 To manually busy the card, type

`>BSY`

and press the Enter key.

Example of a MAP response:

```
bsy
OK
```

30 Repeat steps 26 and 29 for each MTD controller card on the shelf. Go to step 31.

31 To return to the IOC level of the MAP display, type

`>QUIT`

and press the Enter key.

32 Determine the state of the IOC.

If the state of the IOC	Do
is `M`	step 34
is other than listed here	step 33

33 To manually busy the IOC, type

`>BSY IOC`

and press the Enter key.

System cards in an IOC (continued)

At the shelf

34

> **WARNING**
> **Static electricity damage**
> Wear a wrist strap that connects to the wrist-strap grounding point of the frame supervisory panel (FSP) or the modular supervisory panel (MSP) to handle circuit cards. The wrist strap protects the cards against static electricity damage.

To replace the card, perform the procedure *Replacing a card* in this document. Complete the procedure and return to this point.

Note: If the card you replace has switches, make sure that the switches on the replacement card have the same settings.

35 The next action depends on the reason you perform this procedure.

If a maintenance procedure	Do
directed you to this procedure	step 36
did not direct you to this procedure	step 37

36 Return to the maintenance procedure that directed you to this procedure. Continue as directed by the maintenance procedure.

At the MAP terminal

37 To return the IOC to service, type

>RTS IOC

and press the Enter key.

38 The next action depends on if disk drive or MTD controller cards are on the shelf.

If disk drive or MTD controller cards	Do
are on the shelf	step 39
are not on the shelf	step 42

39 To post the card, type

>CARD card_no

and press the Enter key.

where

System cards in an IOC (continued)

card_no
is the card identification number (0 to 8)

40 To return the controller to service, type

>RTS

and press the Enter key.

41 Repeat steps 39 and 40 for each disk drive or MTD controller card on the shelf. Go to step 42.

42 The next action depends on if MPC cards are on the shelf.

If MPC cards	Do
are on the shelf	step 43
are not on the shelf	step 49

43 To post the card, type

>CARD card_no

and press the Enter key.

where

card_no
is the card identification number (0 to 8)

44 To load the MPC, type

>DOWNLD

and press the Enter key.

Example of a MAP response:

```
DOWNLOAD OF TABLE MPC FILE "MPC403AB" SUCCEEDED.
```

If the DOWNLD command	Do
passed	step 45
failed	step 62

45 To return the MPC to service, type

>RTS ALL

and press the Enter key.

Example of a MAP response:

```
REQUEST PASSED FOR CARD.REQUEST PASSED FOR LINKS.
```

System cards in an IOC (continued)

46 Wait 1 min to check the status of MPC components.

If	Do
the system status is `Ready`, the board status is `CO-MACT`, and the link status is `ENABLD` for each link	step 47
these statuses are other than listed here	step 62

47 Repeat steps 43 to 46 for each card on the shelf. Go to step 48.

48 Notify users that MPC service is available.

49 The next action depends on if terminal controller cards are on the shelf.

If terminal controller cards	Do
are on the shelf	step 50
are not on the shelf	step 63

50 To post the card, type

`>CARD card_no`

and press the Enter key.

where

card_no
is the card identification number (0 to 8)

51 To return a port on the card to service, type

`>RTS port_no`

and press the Enter key.

where

port_no
is the port identification number (0 to 3)

If the RTS command	Do
passed	step 52
failed	step 62

52 Repeat step 51 until you return to service all ports on the terminal controller card. Go to step 53.

53 Repeat steps 50 to 52 for each terminal controller card on the shelf. Go to step 63.

System cards in an IOC (continued)

54

> **WARNING**
> **Loss of data**
> If files are open do not busy the controller. If you busy the controller while files are open, billing data will be lost. For additional help, contact the next level of support.

If device independent recording package (DIRP) volumes are open, the following events occur:

- the DDU drops SysB
- billing data is lost
- open Logutil files are lost or corrupted

Before starting card replacement procedures, close the DIRP volumes. Close files from DIRP and demount active volumes from the DDU. Use the procedure, “Deallocating Recording Volumes in the DIRP Utility" in *Routine Maintenance Procedures*.

55 Stop files recording to and from the Logutil. Type the following command at the Logutil command level:

`>LOGUTIL;LISTDEVS`

and press the Enter key.

56 Close files on volumes on the DDU of the IOC.

`>STOPDEV dev_name`

and press the Enter key.

where

dev_name
is the name of the device

`>QUIT`

and press the Enter key.

57 Repeat the ALLOC command to determine if files are closed, by typing

`>ALLOC`

and pressing the Enter key.

If the files	Do
are open	step 58
are closed	step 59

58 Confirm that you have done steps 54 to 57. If the files are still open, contact your next level of support.

System cards in an IOC (end)

59 Manually busy the DDU, by typing

>BSY

and pressing the Enter key.

If the DDU	Do
is MBSY	step 60
is not MBSY	step 62

60 When cards are replaced and the DDU is in service, open the files. Use the procedure “Allocating Recording Volumes in the DIRP Utility" in *Routine Maintenance Procedures*.

61 To determine why the component is offline, consult operating company personnel. Continue as directed by operating company personnel.

62 For additional help, contact the next level of support.

63 The procedure is complete.

Index

C

Card
replacing Vol. 3, 9-166
card removal and placement
card replacement common procedures Vol. 3, 9-19
card replacement common procedures
Activating CCS7 links Vol. 3, 9-2
Activity switch with memory match Vol. 3, 9-11
card removal and placement Vol. 3, 9-19
Correcting a load mismatch Vol. 3, 9-32
Deactivating CCS7 links Vol. 3, 9-47
Failure to switch clock mastership Vol. 3, 9-55
Loading a PM Vol. 3, 9-64
Manually busying LIM-to-MS DS30 links Vol. 2, 6-26, Vol. 3, 9-76
Manually busying Series II PM C-side links Vol. 3, 9-82, Vol. 3, 9-95
Manually busying SMA C-side links Vol. 3, 9-89
Moving an XSG to a spare XLIU Vol. 3, 9-137
placing MP in service (integrated) Vol. 3, 5-57
placing MP in service (standalone) Vol. 3, 9-145
removing MP from service (integrated) Vol. 3, 5-62
removing MP from service (standalone) Vol. 3, 9-150
Replacing a card Vol. 3, 9-160
Replacing a line card Vol. 3, 9-172
Reseating cards in equipment shelves Vol. 3, 9-179
Returning LIM-to-MS DS30 links to service Vol. 2, 6-33, Vol. 3, 9-188
Switching the clock source Vol. 3, 9-193
TMS shelf layouts Vol. 3, 4-2
Unseating cards in equipment shelves Vol. 3, 9-200
Verifying load compatibility of SuperNode cards Vol. 3, 9-204
Card replacement procedures
NT2X70 Vol. 4, 1-490, Vol. 4, 1-498
NT6X17 Vol. 4, 1-739
NT6X18 Vol. 4, 1-783
NT6X19 Vol. 4, 1-823
NT6X20 Vol. 4, 1-863
NT6X21 Vol. 4, 1-920
NT6X40 Vol. 5, 1-2, Vol. 5, 1-14, Vol. 5, 1-26
NT6X41 Vol. 5, 1-64, Vol. 5, 1-71
NT6X42 Vol. 5, 1-101, Vol. 5, 1-107
NT6X44 Vol. 5, 1-138
NT6X50 Vol. 5, 1-259, Vol. 5, 1-275
NT6X53 Vol. 5, 1-487
NT6X54 Vol. 5, 1-556
NT6X69 Vol. 5, 1-648, Vol. 5, 1-654
NT6X71 Vol. 5, 1-721
NT6X76 Vol. 5, 1-869
NT6X78 Vol. 5, 1-919, Vol. 5, 1-925, Vol. 5, 1-932
NT6X80 Vol. 5, 1-951, Vol. 5, 1-957
NT6X92 Vol. 6, 1-112, Vol. 6, 1-118, Vol. 6, 1-125
NT6X99 Vol. 6, 1-186
NTAX74 Vol. 6, 1-303, Vol. 6, 1-315, Vol. 6, 1-327, Vol. 6, 1-337, Vol. 6, 1-347
NTAX78 Vol. 6, 1-355, Vol. 6, 1-362
NTBX01 Vol. 6, 1-417, Vol. 6, 1-423, Vol. 6, 1-430

NTBX02 Vol. 6, 1-508, Vol. 6, 1-515, Vol. 6, 1-523
NTBX27 Vol. 6, 1-586
NTMX71 Vol. 6, 1-916, Vol. 6, 1-924
NTMX72 Vol. 6, 1-1002
NTMX73 Vol. 7, 1-54
NTMX75 Vol. 7, 1-162
NTMX76 Vol. 7, 1-214
NTMX79 Vol. 7, 1-390
NTMX81 Vol. 7, 1-435, Vol. 7, 1-451
NTRX41 Vol. 7, 1-655
in CDSN (cabinetized dual shelf network) Vol. 1, 8-197
in CDTO (cabinetized digital trunk controller offshore) Vol. 1, 8-197
in CIOE (cabinetized input/output equipment) Vol. 1, 8-197
in CIPE (cabinetized international peripheral equipment) Vol. 1, 8-197
in CLGO (cabinetized line group controller offshore) Vol. 1, 8-197
in CMIS (cabinetized miscellaneous equipment) Vol. 1, 8-197
in CMS7 (cabinetized message switch 7) Vol. 1, 8-197
in CTME (cabinetized trunk module equipment) Vol. 1, 8-197
NTRX42 Vol. 7, 1-766
NTRX43 Vol. 7, 1-816
NTRX54 Vol. 7, 1-889
NTTR46 Vol. 7, 1-902
NTTR47 Vol. 7, 1-908
NTTR60 Vol. 7, 1-914
NTTR66 Vol. 7, 1-921
NTTR67 Vol. 7, 1-927
NTTR70 Vol. 7, 1-934
NTTR71 Vol. 7, 1-941
NTTR72 Vol. 7, 1-946
NTTR73 Vol. 7, 1-952
NTTR74 Vol. 7, 1-956
NTTR75 Vol. 7, 1-962
NTTR76 Vol. 7, 1-970
NTTR77 Vol. 7, 1-979
NTTR87 Vol. 7, 1-986
card replacement procedures
EDRAM Vol. 3, 6-84
NT0X10 Vol. 4, 1-2, Vol. 4, 1-6, Vol. 4, 1-14, Vol. 4, 1-18, Vol. 4, 1-25, Vol. 4, 1-31, Vol. 4, 1-37, Vol. 4, 1-43
in an RMM Vol. 4, 1-10
in MTM, STM Vol. 3, 6-93
in OAU Vol. 2, 10-7
NT0X36
in an international cabinet auxiliary module Vol. 1, 8-74
in CIOE with DDU, DPP, IOC, MTD, or ROS Vol. 1, 8-8
in IOE frame Vol. 1, 8-53
NT0X67
in IOC Vol. 1, 9-97
NT0X70
in MTM, TM Vol. 3, 6-27
in OAU Vol. 2, 10-7
NT0X91 Vol. 4, 1-61
in CPCE provisioned for DTC, DTCI, IDTC, PDTC Vol. 1, 8-98
in CPCE provisioned for ILGC, LGC, LGCI, PLGC Vol. 1, 8-98
in CPCE provisioned for ILTC, LTC, LTCI, PLTC Vol. 1, 8-98
in CTME with ISM, MTM, OAU, STM, or TM Vol. 1, 8-29
in DCE Vol. 1, 8-112
in LME Vol. 1, 8-123
in MS6E Vol. 1, 8-133
in MS7E Vol. 1, 8-147
in NT0X48 single-bay network Vol. 1, 8-159
in NT5X13 combined single-bay network Vol. 1, 8-159
in NT8X11 dual shelf network Vol. 1, 8-159
in ST6E, ST7E Vol. 1, 8-147
in TME with ISM, MTM, OAU, STM, and TM Vol. 1, 8-172
NT0X91AA Vol. 4, 1-49, Vol. 4, 1-90
NT0X91AE Vol. 4, 1-49, Vol. 4, 1-96, Vol. 4, 1-105
NT1X00
in ISM, MTM, STM Vol. 3, 6-93
NT1X31
in MTM, STM Vol. 3, 6-93
NT1X54
in ISM, TM Vol. 3, 6-93
NT1X55
in IOC Vol. 1, 9-10

NT1X62
in IOC Vol. 1, 9-97
NT1X67
in IOC Vol. 1, 9-21
NT1X68
in IOC Vol. 1, 9-10
NT1X75
in MTM with DRAM, STM with DRAM Vol. 3, 6-27
NT1X76
in DRAM Vol. 3, 6-93
in MTM, STM Vol. 3, 6-93
NT1X76 in MTM Vol. 2, 5-2
NT1X77
in DRAM Vol. 3, 6-93
in MTM, STM Vol. 3, 6-93
NT1X78
in dual DDU shelf Vol. 1, 9-28
in single DDU shelf Vol. 1, 9-28
in SuperNode ROS Vol. 3, 1-5
in SuperNode SE ROS Vol. 3, 1-5
NT1X79
in DRAM Vol. 3, 6-93
in MTM, STM Vol. 3, 6-93
NT1X80
in ISM, MTM, STM Vol. 3, 6-84
NT1X81
in ISM, MTM, STM Vol. 3, 6-84
NT1X89
in IOC Vol. 1, 9-37
NT1X90
in ISM, MTM, STM Vol. 3, 6-93
NT2X01
in ISM, MTM, STM Vol. 3, 6-93
NT2X02
in LM line drawer Vol. 2, 2-16
NT2X03
in LM line drawer Vol. 2, 2-16
NT2X05
in LM controller Vol. 2, 2-30
in remote line controller Vol. 2, 11-22
in RLM Vol. 2, 11-22
NT2X06 Vol. 4, 1-114, Vol. 4, 1-121, Vol. 4, 1-129, Vol. 4, 1-136, Vol. 4, 1-144, Vol. 4, 1-153, Vol. 4, 1-162
in DCM, DES Vol. 1, 4-47
in MTM, TM Vol. 3, 6-69
in NT0X48 single-bay network Vol. 2, 9-40
in OAU Vol. 2, 10-14
NT2X07
in DCM, DES Vol. 1, 4-47
in NT0X48 single-bay network Vol. 2, 9-40
NT2X09 Vol. 4, 1-171, Vol. 4, 1-178, Vol. 4, 1-186, Vol. 4, 1-194, Vol. 4, 1-202, Vol. 4, 1-211, Vol. 4, 1-220
in DRAM Vol. 3, 6-69
in EDRAM Vol. 3, 6-69
in MTM, TM Vol. 3, 6-69
in OAU Vol. 2, 10-14
NT2X10 Vol. 4, 1-229, Vol. 4, 1-233, Vol. 4, 1-237, Vol. 4, 1-244, Vol. 4, 1-251, Vol. 4, 1-258
in ISM, MTM, STM Vol. 3, 6-93
NT2X11 Vol. 4, 1-265, Vol. 4, 1-270, Vol. 4, 1-278, Vol. 4, 1-282, Vol. 4, 1-289, Vol. 4, 1-298, Vol. 4, 1-307
in an RMM Vol. 4, 1-274
in ISM, MTM, STM Vol. 3, 6-93
NT2X16
in LM line drawer Vol. 2, 2-16
NT2X20
in LM line drawer Vol. 2, 2-24, Vol. 2, 11-16
NT2X21
in LM controller Vol. 2, 2-9
in remote line controller Vol. 2, 11-9
in RLM Vol. 2, 11-9
NT2X22
in LM controller Vol. 2, 2-9
in remote line controller Vol. 2, 11-9
in RLM Vol. 2, 11-9
NT2X23
in LM controller Vol. 2, 2-9
in remote line controller Vol. 2, 11-9
in RLM Vol. 2, 11-9
NT2X24
in LM controller Vol. 2, 2-9
in remote line controller Vol. 2, 11-9
in RLM Vol. 2, 11-9
NT2X25
in LM controller Vol. 2, 2-9
in remote line controller Vol. 2, 11-9
in RLM Vol. 2, 11-9
NT2X26
in LM controller Vol. 2, 2-9
in remote line controller Vol. 2, 11-9
in RLM Vol. 2, 11-9
NT2X27
in LM controller Vol. 2, 2-9

in remote line controller Vol. 2, 11-9
in RLM Vol. 2, 11-9
NT2X32
in DCM, DES Vol. 1, 4-8
NT2X33
in DCM, DES Vol. 1, 4-8
in LM controller Vol. 2, 2-9
NT2X34
in DCM, DES Vol. 1, 4-8
in LM controller Vol. 2, 2-9
NT2X35
in DCM Vol. 1, 4-13
NT2X36
in DCM Vol. 1, 4-27
in LM controller Vol. 2, 2-9
NT2X37
in DCM, DES Vol. 1, 4-8
NT2X38
in DCM, DES Vol. 1, 4-8
NT2X41
in OAU Vol. 2, 10-7
NT2X42
in OAU Vol. 2, 10-7
NT2X43
in ISM, MTM, STM Vol. 3, 6-93
in OAU Vol. 2, 10-7
NT2X45
in MTM, TM Vol. 3, 6-27
in OAU Vol. 2, 10-7
NT2X47
in ISM, MTM, STM Vol. 3, 6-93
NT2X48 Vol. 4, 1-316, Vol. 4, 1-321, Vol. 4, 1-326
in ISM, MTM, STM Vol. 3, 6-93
NT2X50
in MTM, STM Vol. 3, 6-93
NT2X53
in MTM, TM Vol. 3, 6-27
in OAU Vol. 2, 10-7
NT2X55 Vol. 4, 1-331
in ISM, MTM, STM Vol. 3, 6-93
NT2X56
in ISM, MTM, STM Vol. 3, 6-93
NT2X57 Vol. 4, 1-338, Vol. 4, 1-342, Vol. 4, 1-350, Vol. 4, 1-355, Vol. 4, 1-362, Vol. 4, 1-369, Vol. 4, 1-376
in an RMM Vol. 4, 1-346
in ISM, MTM, STM Vol. 3, 6-93
in OAU Vol. 2, 10-7
NT2X59 Vol. 4, 1-383, Vol. 4, 1-387, Vol. 4, 1-401, Vol. 4, 1-406, Vol. 4, 1-413, Vol. 4, 1-420, Vol. 4, 1-427
in an RMM Vol. 4, 1-394
in MTM, TM Vol. 3, 6-27
in OAU Vol. 2, 10-7
NT2X65
in ISM, MTM, STM, TM Vol. 3, 6-93
NT2X66
in ISM, MTM, STM, TM Vol. 3, 6-93
NT2X70 Vol. 4, 1-434, Vol. 4, 1-441, Vol. 4, 1-464, Vol. 4, 1-478, Vol. 4, 1-506, Vol. 4, 1-517, Vol. 4, 1-526
in 6STA or MSB6 Vol. 2, 8-20
in an HIE Vol. 4, 1-455
in DCM, DES Vol. 1, 4-47
in DRAM Vol. 3, 6-69
in DTC, DTCI, IDTC, PDTC Vol. 3, 8-42
in EDRAM Vol. 3, 6-69
in ILGC, LGC, LGCI, PLGC Vol. 3, 8-42
in ILTC, LTC, LTCI, PLTC Vol. 3, 8-42
in IOC Vol. 1, 9-44
in LM controller Vol. 2, 2-36
in NT5X13 combined single-bay network Vol. 2, 9-40
in NT8X11 dual shelf network Vol. 2, 9-40
in remote line module Vol. 2, 11-28
in RLM Vol. 2, 11-28
in ST7G of MSB7 Vol. 2, 8-35
in STA7 or MSB7 Vol. 2, 8-20
in STCM of MSB6 Vol. 2, 8-35
in STM Vol. 3, 6-69
NT2X70 in TMS Vol. 3, 4-8
NT2X70 in TPC Vol. 3, 5-2
NT2X71
in ISM, MTM, STM Vol. 3, 6-93
NT2X72
in ISM, TM Vol. 3, 6-93
NT2X75
in ISM, MTM, STM Vol. 3, 6-93
NT2X77
in ISM, MTM, STM Vol. 3, 6-93
NT2X78
in TM Vol. 3, 6-93
NT2X80
in MTM, STM Vol. 3, 6-93
NT2X81
in TM Vol. 3, 6-93

NT2X82
in ISM, TM Vol. 3, 6-93
NT2X83
in TM Vol. 3, 6-93
NT2X84
in ISM, TM Vol. 3, 6-93
NT2X85
in ISM, TM Vol. 3, 6-93
NT2X86
in ISM, TM Vol. 3, 6-93
NT2X88
in TM Vol. 3, 6-93
NT2X90 Vol. 4, 1-533, Vol. 4, 1-538, Vol. 4, 1-543, Vol. 4, 1-557, Vol. 4, 1-562, Vol. 4, 1-569, Vol. 4, 1-576
in an RMM Vol. 4, 1-551
in ISM, TM Vol. 3, 6-93
NT2X92
in TM Vol. 3, 6-93
NT2X95
in TM Vol. 3, 6-93
NT2X96
in ISM, MTM, STM Vol. 3, 6-93
NT2X98
in ISM, TM Vol. 3, 6-93
NT3X02
in ISM, MTM, STM Vol. 3, 6-93
NT3X03
in ISM, MTM, STM Vol. 3, 6-93
NT3X04 Vol. 4, 1-583
in ISM, TM Vol. 3, 6-93
NT3X05
in MTM, STM Vol. 3, 6-93
NT3X06
in ISM, TM Vol. 3, 6-93
NT3X07
in ISM, TM Vol. 3, 6-93
NT3X08
in ISM, MTM, STM Vol. 3, 6-93
NT3X08AA in MTM Vol. 3, 6-64
NT3X09 Vol. 4, 1-590, Vol. 4, 1-596, Vol. 4, 1-601, Vol. 4, 1-612, Vol. 4, 1-617, Vol. 4, 1-624, Vol. 4, 1-634, Vol. 4, 1-644
in an RMM Vol. 4, 1-607
in ISM, MTM, STM Vol. 3, 6-93
NT3X16
in SuperNode ROS Vol. 3, 1-14
in SuperNode SE ROS Vol. 3, 1-14
NT3X17
in NT0X48 single-bay network Vol. 2, 9-72
NT3X18
in NT0X48 single-bay network Vol. 2, 9-72
NT3X19
in NT0X48 single-bay network Vol. 2, 9-72
NT3X20
in NT0X48 single-bay network Vol. 2, 9-72
NT3X21
in NT0X48 single-bay network Vol. 2, 9-72
NT3X22
in NT0X48 single-bay network Vol. 2, 9-72
NT3X23
in NT0X48 single-bay network Vol. 2, 9-72
NT3X24
in NT0X48 single-bay network Vol. 2, 9-72
NT3X47
in remote line controller Vol. 2, 11-9
in RLM Vol. 2, 11-9
NT3X48
in remote line controller Vol. 2, 11-9
in RLM Vol. 2, 11-9
NT3X49
in remote line controller Vol. 2, 11-9
in RLM Vol. 2, 11-9
NT3X65
in DCM Vol. 1, 4-37
NT3X67
in MTM, STM Vol. 3, 6-93
NT3X67 in MTM Vol. 2, 5-10
NT3X68
in MTM, STM Vol. 3, 6-93
NT3X70
in NT5X13 combined single-bay network Vol. 2, 9-72
NT3X71
in NT5X13 combined single-bay network Vol. 2, 9-72
NT3X72
in NT5X13 combined single-bay network Vol. 2, 9-72
NT3X73
in NT5X13 combined single-bay network Vol. 2, 9-72
NT3X74
in NT5X13 combined single-bay network Vol. 2, 9-72
in NT8X11 dual-shelf network Vol. 2, 9-72

NT3X75
in NT5X13 combined single-bay network Vol. 2, 9-72
in NT8X11 dual-shelf network Vol. 2, 9-72
NT3X76
in NT5X13 combined single-bay network Vol. 2, 9-72
in NT8X11 dual-shelf network Vol. 2, 9-72
NT3X82 Vol. 4, 1-653
in OAU Vol. 2, 10-7
NT3X83 Vol. 4, 1-660
in OAU Vol. 2, 10-7
NT3X84
in OAU Vol. 2, 10-7
NT3X85
in OAU Vol. 2, 10-7
NT3X86
in NT5X13 combined single-bay network Vol. 2, 9-72
NT3X91
in ISM, TM Vol. 3, 6-93
NT4X23
in ISM, MTM, STM Vol. 3, 6-93
NT4X65
in MTM, STM, TM Vol. 3, 6-27
in OAU Vol. 2, 10-7
NT4X97 Vol. 4, 1-668, Vol. 4, 1-673, Vol. 4, 1-680
in ISM, MTM, STM Vol. 3, 6-44
NT4X98 Vol. 4, 1-687, Vol. 4, 1-694
in ISM, MTM, STM Vol. 3, 6-44
NT5X03
in ISM, TM Vol. 3, 6-93
NT5X04
in ISM, TM Vol. 3, 6-93
NT5X06
in TM Vol. 3, 6-93
NT5X25
in ISM, TM Vol. 3, 6-93
NT5X29
in ISM, MTM, STM Vol. 3, 6-93
NT5X30
in ISM, MTM, STM, TM Vol. 3, 6-93
NT6X1205
in DTC, IDTC, PDTC Vol. 3, 8-19
in ILGC, LGC, PLGC Vol. 3, 8-19
in ILTC, LTC, PLTC Vol. 3, 8-19
NT6X17 Vol. 4, 1-703, Vol. 4, 1-707, Vol. 4, 1-711, Vol. 4, 1-715, Vol. 4, 1-723, Vol. 4, 1-731
in ILCM, LCM, LCME Vol. 2, 1-39
in LM line drawer Vol. 2, 2-24, Vol. 2, 11-16
NT6X18 Vol. 4, 1-743, Vol. 4, 1-747, Vol. 4, 1-751, Vol. 4, 1-755, Vol. 4, 1-759, Vol. 4, 1-767, Vol. 4, 1-775
in LCM, LCME Vol. 2, 1-39
in LM line drawer Vol. 2, 2-24, Vol. 2, 11-16
NT6X19 Vol. 4, 1-787, Vol. 4, 1-791, Vol. 4, 1-795, Vol. 4, 1-799, Vol. 4, 1-807, Vol. 4, 1-815
in LCM, LCME Vol. 2, 1-39
NT6X20 Vol. 4, 1-827, Vol. 4, 1-831, Vol. 4, 1-835, Vol. 4, 1-839, Vol. 4, 1-847, Vol. 4, 1-855
in LCM Vol. 2, 1-73
NT6X21 Vol. 4, 1-867, Vol. 4, 1-871, Vol. 4, 1-875, Vol. 4, 1-883, Vol. 4, 1-893, Vol. 4, 1-902, Vol. 4, 1-911
in an LCM Vol. 4, 1-879
in LCM, LCME Vol. 2, 1-39
NT6X23
in LCM Vol. 2, 1-73
NT6X27 Vol. 4, 1-924, Vol. 4, 1-931, Vol. 4, 1-938
in IDTC, ILGC, ILTC Vol. 3, 8-124
in PDTC, PLGC, PLTC Vol. 3, 8-124
NT6X28
in IDTC, ILGC, ILTC Vol. 3, 8-31
in IPDTC, PLGC, LTCO, PLTC Vol. 3, 8-31
NT6X30 Vol. 4, 1-945, Vol. 4, 1-960, Vol. 4, 1-974, Vol. 4, 1-988, Vol. 4, 1-1002
in LCE, LCEI Vol. 2, 1-47
NT6X33
in ILCM, LCM, LCME Vol. 2, 1-39
NT6X36 Vol. 4, 1-1021, Vol. 4, 1-1031, Vol. 4, 1-1036
in an FSP Vol. 4, 1-1016, Vol. 4, 1-1026
in LCE frame Vol. 1, 8-192
in LCEI frame Vol. 1, 8-192
NT6X40 Vol. 5, 1-38, Vol. 5, 1-51
in 6STA of MSB6 Vol. 2, 8-48
in DTC, DTCI, IDTC, DTCO, PDTC Vol. 3, 8-59
in ILGC, LGC, LGCI, LGCO,PLGC Vol. 3, 8-59

in ILTC, LTC, LTCI, LTCO, PLTC Vol. 3, 8-59
in STA7 of MSB7 Vol. 2, 8-48
NT6X41 Vol. 5, 1-78, Vol. 5, 1-87, Vol. 5, 1-95
in DTC, DTCI, IDTC, DTCO, PDTC Vol. 3, 8-31
in ILGC, LGC, LGCI, LGCO, PLGC Vol. 3, 8-31
in ILTC, LTC, LTCI, LTCO, PLTC Vol. 3, 8-31
NT6X42 Vol. 5, 1-114, Vol. 5, 1-122
in DTC, DTCI, IDTC, DTCO, PDTC Vol. 3, 8-31
in ILGC, LGC, LGCI, LGCO, PLGC Vol. 3, 8-31
in ILTC, LTC, LTCI, LTCO, PLTC Vol. 3, 8-31
NT6X43
in DTC, LGC, LTC Vol. 3, 8-31
NT6X44 Vol. 5, 1-130, Vol. 5, 1-144, Vol. 5, 1-158
in DTC, DTCI, IDTC, DTCO, PDTC Vol. 3, 8-31
in ILGC, LGC, LGCI, LGCO, PLGC Vol. 3, 8-31
in ILTC, LTC, LTCI, LTCO, PLTC Vol. 3, 8-31
NT6X45 Vol. 5, 1-166, Vol. 5, 1-172, Vol. 5, 1-178, Vol. 5, 1-184
in 6STA of MSB6 Vol. 2, 8-62
in STA7 of MSB7 Vol. 2, 8-62
NT6X46
in 6STA of MSB6 Vol. 2, 8-62
in STA7 of MSB7 Vol. 2, 8-62
NT6X47 Vol. 5, 1-190, Vol. 5, 1-196, Vol. 5, 1-202
in 6STA of MSB6 Vol. 2, 8-62
in STA7 of MSB7 Vol. 2, 8-62
NT6X48 Vol. 3, 8-72, Vol. 3, 8-82, Vol. 5, 1-208
NT6X50 Vol. 5, 1-216, Vol. 5, 1-223, Vol. 5, 1-237, Vol. 5, 1-244
in an HIE Vol. 5, 1-230
in DTC, DTCI, IDTC, DTCO, DTCOI Vol. 3, 8-124
in ILGC LGC, LGCI, LGCO Vol. 3, 8-124
in ILTC, LTC, LTCI, LTCO Vol. 3, 8-124
NT6X51 Vol. 5, 1-291, Vol. 5, 1-298, Vol. 5, 1-305, Vol. 5, 1-312, Vol. 5, 1-324, Vol. 5, 1-332, Vol. 5, 1-339, Vol. 5, 1-347
in an LCM Vol. 5, 1-319
in LCM, ILCM Vol. 2, 1-31
NT6X52 Vol. 5, 1-355, Vol. 5, 1-361, Vol. 5, 1-367, Vol. 5, 1-373, Vol. 5, 1-384, Vol. 5, 1-392, Vol. 5, 1-401, Vol. 5, 1-410
in an LCM Vol. 5, 1-379
in LCM, ILCM Vol. 2, 1-31
NT6X53 Vol. 5, 1-418, Vol. 5, 1-425, Vol. 5, 1-432, Vol. 5, 1-444, Vol. 5, 1-460, Vol. 5, 1-469, Vol. 5, 1-478
in an LCM Vol. 5, 1-453
in LCM, LCME Vol. 2, 1-79
NT6X54 Vol. 5, 1-493, Vol. 5, 1-500, Vol. 5, 1-509, Vol. 5, 1-518, Vol. 5, 1-533, Vol. 5, 1-542, Vol. 5, 1-549
in an LCM Vol. 5, 1-527
in ILCM, LCM Vol. 2, 1-13
NT6X55
in DTC, IDTC, DTCO, PDTC Vol. 3, 8-124
in ILGC, LGC, LGCO, PLGC Vol. 3, 8-124
in ILTC, LTC, LTCO, PLTC Vol. 3, 8-124
NT6X60 Vol. 5, 1-565, Vol. 5, 1-572, Vol. 5, 1-579, Vol. 5, 1-587
NT6X62
in DTC, IDTC, DTCO, PDTC Vol. 3, 8-31
in ILGC, LGCO, PLGC Vol. 3, 8-31
NT6X65
in STCM of MSB6 Vol. 2, 8-70
NT6X66
in ST7G of MSB7 Vol. 2, 8-70
NT6X68
in MSB6 Vol. 2, 8-55
in MSB7 Vol. 2, 8-55
NT6X69 Vol. 5, 1-595, Vol. 5, 1-605, Vol. 5, 1-613, Vol. 5, 1-622, Vol. 5, 1-630, Vol. 5, 1-639, Vol. 5, 1-670, Vol. 5, 1-678
in DTC, DTCI, IDTC, DTCO, PDTC Vol. 3, 8-31
in ILGC, LGC, LGCI, LGCO, PLGC Vol. 3, 8-31
in ILTC, LTC, LTCI, LTCO, PLTC Vol. 3, 8-31
NT6X69 in TMS Vol. 3, 4-19
NT6X70
in LGC, LGCI Vol. 3, 8-31
in LTC, LTCI Vol. 3, 8-31
NT6X71 Vol. 5, 1-684, Vol. 5, 1-688, Vol. 5, 1-692, Vol. 5, 1-696, Vol. 5, 1-705, Vol. 5, 1-713

in LCM, LCME Vol. 2, 1-39
NT6X72 Vol. 5, 1-725
NT6X73 Vol. 5, 1-734, Vol. 5, 1-738, Vol. 5, 1-742, Vol. 5, 1-751
in an HIE Vol. 5, 1-746
NT6X74 Vol. 5, 1-755, Vol. 5, 1-761, Vol. 5, 1-775, Vol. 5, 1-782, Vol. 5, 1-790, Vol. 5, 1-799, Vol. 5, 1-808
in an RMM Vol. 5, 1-768
NT6X75 Vol. 5, 1-817, Vol. 5, 1-824, Vol. 5, 1-831, Vol. 5, 1-838
NT6X76 Vol. 5, 1-845, Vol. 5, 1-853, Vol. 5, 1-861
in LCM, LCME Vol. 2, 1-39
NT6X78 Vol. 5, 1-876, Vol. 5, 1-883, Vol. 5, 1-891, Vol. 5, 1-898, Vol. 5, 1-905, Vol. 5, 1-912, Vol. 5, 1-946
in ILGC Vol. 3, 8-90
in ILTC Vol. 3, 8-90
in LGC Vol. 3, 8-90
in LGCO Vol. 3, 8-90
in LGCOI Vol. 3, 8-90
in LTC Vol. 3, 8-90
in LTCO Vol. 3, 8-90
in LTCOI Vol. 3, 8-90
in PLGC Vol. 3, 8-90
in PLTC Vol. 3, 8-90
NT6X79
in DTC, DTCO, PDTC Vol. 3, 8-31
in LGC, LGCI Vol. 3, 8-31
in LTC, LTCI Vol. 3, 8-31
NT6X80 Vol. 5, 1-964, Vol. 5, 1-972, Vol. 5, 1-981
NT6X85 Vol. 6, 1-2, Vol. 6, 1-13, Vol. 6, 1-24
NT6X86 Vol. 6, 1-30, Vol. 6, 1-39
NT6X87 Vol. 6, 1-48, Vol. 6, 1-56
NT6X92 Vol. 6, 1-64, Vol. 6, 1-71, Vol. 6, 1-79, Vol. 6, 1-87, Vol. 6, 1-95, Vol. 6, 1-104, Vol. 6, 1-140, Vol. 6, 1-243
in DTC, DTCI, IDTC, DTCO, PDTC Vol. 3, 8-31
in ILGC, LGC, LGCI, LGCO, PLGC Vol. 3, 8-31
in ILTC, LTC, LTCI, LGCO, PLTC Vol. 3, 8-31
NT6X93
in ILCM, LCM Vol. 2, 1-39
NT6X94
in ILCM Vol. 2, 1-39
NT6X95
in LCME Vol. 2, 1-73
NT6X98
in ILCM, LCM, LCME Vol. 2, 1-39
NT6X99 Vol. 6, 1-146, Vol. 6, 1-150, Vol. 6, 1-154, Vol. 6, 1-158, Vol. 6, 1-162, Vol. 6, 1-170, Vol. 6, 1-178
in LCM, LCME Vol. 2, 1-39
NT6Xseries in TMS Vol. 3, 4-17
NT7X05 Vol. 6, 1-190, Vol. 6, 1-198, Vol. 6, 1-207, Vol. 6, 1-234, Vol. 6, 1-252
in LGC, LGCI, LTC, LTCI, DTC, DTCI Vol. 3, 8-31
NT8X02 Vol. 6, 1-261, Vol. 6, 1-265
NT8X12
in NT8X11 dual-shelf network Vol. 2, 9-72
NT8X13
in NT8X11 dual-shelf network Vol. 2, 9-72
NT8X14
in NT8X11 dual-shelf network Vol. 2, 9-72
NT8X18 Vol. 6, 1-270
NT8X99
in LCM Vol. 2, 1-79
NT9X10
in SuperNode CM Vol. 1, 2-22
in SuperNode SE CM/SLM Vol. 1, 3-85
NT9X12
in SuperNode CM Vol. 1, 2-22
in SuperNode SE CM/SLM Vol. 1, 3-85
in SuperNode SLM Vol. 3, 3-137
NT9X13
in an ELPP LIM unit Vol. 1, 5-36
in ENET 128k Vol. 2, 9-49
in ENET 64k Vol. 2, 9-49
in file processor Vol. 1, 7-43
in LIM unit of LPP Vol. 2, 3-89
in SuperNode CM Vol. 1, 2-22
in SuperNode MS Vol. 2, 6-39
in SuperNode SE 16k ENET Vol. 1, 6-77
in SuperNode SE CM/SLM Vol. 1, 3-85
in SuperNode SE ENI shelf Vol. 1, 6-77
in SuperNode SE MS Vol. 2, 7-25
NT9X14
in APU in LPP LIS Vol. 2, 3-9
in file processor Vol. 1, 7-43
in LIM unit of LPP Vol. 2, 3-155
in SuperNode CM Vol. 1, 2-22
in SuperNode MS Vol. 2, 6-39
in SuperNode SE CM/SLM Vol. 1, 3-85

NT9X15
in LIM unit of ELPP Vol. 1, 5-48
in LIM unit of LPP Vol. 2, 3-155
in SuperNode MS Vol. 2, 6-39
in SuperNode SE MS Vol. 2, 7-25
NT9X17
in LIM unit of ELPP Vol. 1, 5-48
in LIM unit of LPP Vol. 2, 3-155
in SuperNode MS Vol. 2, 6-39
in SuperNode SE MS Vol. 2, 7-25
NT9X20
in SuperNode CM Vol. 1, 2-5, Vol. 3, 3-37, Vol. 3, 3-78
in SuperNode MS Vol. 2, 6-5
NT9X21
in file processor Vol. 1, 7-43
in SuperNode CM Vol. 1, 2-22
in SuperNode SE CM/SLM Vol. 1, 3-85
in SuperNode SLM Vol. 3, 3-137
NT9X22
in SuperNode CM Vol. 1, 2-22
in SuperNode SLM Vol. 3, 3-137
NT9X23
in LIM unit of LPP Vol. 2, 3-155
in SuperNode MS Vol. 2, 6-5
in SuperNode SE MS Vol. 2, 7-5
NT9X25
in SuperNode MS Vol. 2, 6-39
in SuperNode SE MS Vol. 2, 7-25
NT9X26
in ENET 128k Vol. 2, 9-49
in ENET 64k Vol. 2, 9-49
in file processor Vol. 1, 7-43
in LIM unit of ELPP Vol. 1, 5-48
in LIM unit of LPP Vol. 2, 3-155
in SuperNode CM Vol. 1, 2-22
in SuperNode MS Vol. 2, 6-39
in SuperNode SE 16k ENET Vol. 1, 6-77
in SuperNode SE CM/SLM Vol. 1, 3-85
in SuperNode SE ENI shelf Vol. 1, 6-77
in SuperNode SE MS Vol. 2, 7-25
NT9X27
in superNode CM Vol. 1, 2-22
in SuperNode SLM Vol. 3, 3-137
NT9X30
in ENET 128k Vol. 2, 9-49
in ENET 64k Vol. 2, 9-49
in LIM unit of ELPP Vol. 1, 5-48
in LIM unit of LPP Vol. 2, 3-155
in LPP LIS Vol. 2, 3-100
in SSLPP Vol. 3, 2-74
in SuperNode CM Vol. 1, 2-22
in SuperNode MS Vol. 2, 6-39
in SuperNode SE 16k ENET Vol. 1, 6-53
in SuperNode SE ENI shelf Vol. 1, 6-53
in SuperNode SE LIS Vol. 2, 4-64
in SuperNode SE MS Vol. 2, 7-25
in SuperNode SLM Vol. 3, 3-137
NT9X31
in ENET 128k Vol. 2, 9-49
in ENET 64k Vol. 2, 9-49
in LIM unit of ELPP Vol. 1, 5-48
in SSLPP Vol. 3, 2-74
in SuperNode CM Vol. 1, 2-22
in SuperNode MS Vol. 2, 6-39
in SuperNode SE 16k ENET Vol. 1, 6-53
in SuperNode SE ENI shelf Vol. 1, 6-53
in SuperNode SE MS Vol. 2, 7-25
NT9X32
in SuperNode MS Vol. 2, 6-39
NT9X35
in ENET 128k Vol. 2, 9-15
in ENET 64k Vol. 2, 9-15
in SuperNode SE 16k ENET Vol. 1, 6-7
in SuperNode SE 32k ENET Vol. 1, 6-31
in SuperNode SE ENI shelf Vol. 1, 6-7
NT9X36
in ENET 128K Vol. 2, 9-49
in ENET 64k Vol. 2, 9-49
in SuperNode SE 16k ENET Vol. 1, 6-77
in SuperNode SE ENI shelf Vol. 1, 6-77
NT9X40
in ENET 128k Vol. 2, 9-15
in ENET 64k Vol. 2, 9-15
in SuperNode SE 16k ENET Vol. 1, 6-7, Vol. 1, 6-77
in SuperNode SE 32k ENET Vol. 1, 6-31
in SuperNode SE ENI shelf Vol. 1, 6-7, Vol. 1, 6-77
NT9X41
in ENET 128k Vol. 2, 9-15
in ENET 64k Vol. 2, 9-15
in SuperNode SE 16k ENET Vol. 1, 6-7
in SuperNode SE 32k ENET Vol. 1, 6-31
in SuperNode SE ENI shelf Vol. 1, 6-7
NT9X44
in SuperNode SE CM/SLM Vol. 1, 3-5
in SuperNode SLM Vol. 3, 3-5
NT9X45
in ENET 128k Vol. 2, 9-15

in ENET 64k Vol. 2, 9-15
in SuperNode SE 16k ENET Vol. 1, 6-7
in SuperNode SE 32k ENET Vol. 1, 6-31
in SuperNode SE ENI shelf Vol. 1, 6-7
NT9X46
in SuperNode SE CM/SLM Vol. 1, 3-27
in SuperNode SLM Vol. 3, 3-137
NT9X47
in SuperNode SLM Vol. 3, 3-137
NT9X49
in LIM unit of ELPP Vol. 1, 5-48
in LIM unit of LPP Vol. 2, 3-155
in SuperNode MS Vol. 2, 6-39
in SuperNode SE MS Vol. 2, 7-25
NT9X52
in LIM unit of ELPP Vol. 1, 5-48
in LIM unit of LPP Vol. 2, 3-155
in SuperNode MS Vol. 2, 6-39
in SuperNode SE MS Vol. 2, 7-25
NT9X53
in LIM unit of ELPP Vol. 1, 5-48
in LIM unit of LPP Vol. 2, 3-155
in SuperNode MS Vol. 2, 6-39
in SuperNode SE MS Vol. 2, 7-25
NT9X54
in SuperNode MS Vol. 2, 6-5
in SuperNode SE MS Vol. 2, 7-5
NT9X62
in file processor Vol. 1, 7-43
in LIM unit of ELPP Vol. 1, 5-48
in SuperNode MS Vol. 2, 6-5
in SuperNode SE CM/SLM Vol. 1, 3-45
in SuperNode SE MS Vol. 2, 7-5
NT9X69
in SuperNode MS Vol. 2, 6-5
in SuperNode SE MS Vol. 2, 7-5
NT9X73
in LIM unit of ELPP Vol. 1, 5-48
in LIM unit of LPP Vol. 2, 3-155
in SuperNode SE MS Vol. 2, 7-25
NT9X74
in ELPP LIS Vol. 1, 5-9
in LPP LIS Vol. 2, 3-126
in SuperNode SE ENI shelf Vol. 2, 4-6
in SuperNode SE LIS Vol. 2, 4-6
NT9X76
in EIU in LPP LIS Vol. 2, 3-47
in EIU in SSLPP Vol. 3, 2-17
in EIU in SuperNode SE LIS Vol. 2, 4-13
in LIU7 in LPP LIS Vol. 2, 3-57
in LIU7 in SSLPP Vol. 3, 2-44
in LIU7 in SuperNode SE ENI shelf Vol. 2, 4-38
in LIU7 in SuperNode SE LIS Vol. 2, 4-38
NT9X77
in LIU7 in LPP LIS Vol. 2, 3-57
in LIU7 in SSLPP Vol. 3, 2-44
in LIU7 in SuperNode SE ENI shelf Vol. 2, 4-38
in LIU7 in SuperNode SE LIS Vol. 2, 4-38
NT9X78
in LIU7 in LPP LIS Vol. 2, 3-57
in LIU7 in SSLPP Vol. 3, 2-44
in LIU7 in SuperNode SE ENI shelf Vol. 2, 4-38
in LIU7 in SuperNode SE LIS Vol. 2, 4-38
NT9X79
in ELPP LIS Vol. 1, 5-9
in LIM unit of ELPP Vol. 1, 5-48
in LIM unit of LPP Vol. 2, 3-155
in LPP LIS Vol. 2, 3-36
in SuperNode SE ENI shelf Vol. 2, 4-6
in SuperNode SE LIS Vol. 2, 4-6
in SuperNode SE MS Vol. 2, 7-5
NT9X84
in EIU in LPP LIS Vol. 2, 3-47
NT9X85
in EIU in LPP LIS Vol. 2, 3-47
in EIU in SSLPP Vol. 3, 2-17
in EIU in SuperNode SE LIS Vol. 2, 4-13
NT9X86
in file processor Vol. 1, 7-43
in SuperNode SE CM/SLM Vol. 1, 3-85
NT9X87
in file processor Vol. 1, 7-43
NT9X88
in file processor Vol. 1, 7-43
NT9X89
in file processor Vol. 1, 7-6
NT9X90
in file processor Vol. 1, 7-18
NT9X91
in file processor Vol. 1, 7-33
in SuperNode SE CM/SLM Vol. 1, 3-67
NT9X96
in SSLPP Vol. 3, 2-7
NT9X98
in SSLPP Vol. 3, 2-7
NTAX74 Vol. 6, 1-281, Vol. 6, 1-292
in DTCI, PDTC Vol. 3, 8-147

NTAX78 Vol. 6, 1-369
in DTCI Vol. 3, 8-31
NTBX01 Vol. 6, 1-381, Vol. 6, 1-390, Vol. 6, 1-399, Vol. 6, 1-408, Vol. 6, 1-437
in DTCI, LGCI, LTCI Vol. 3, 8-147
in DTCO, LTCO, LGCO, PDTC, PLTC, PLGC Vol. 3, 8-147
NTBX01 in TMS Vol. 3, 4-30
NTBX02 Vol. 6, 1-443, Vol. 6, 1-456, Vol. 6, 1-469, Vol. 6, 1-482, Vol. 6, 1-495
LGCI, PLGC Vol. 3, 8-115
LTCI, PLTC Vol. 3, 8-115
NTBX02 in TMS Vol. 3, 4-37
NTBX25
in LCME Vol. 2, 1-39
NTBX26 Vol. 6, 1-538, Vol. 6, 1-546, Vol. 6, 1-554
in LCME Vol. 2, 1-39
NTBX27 Vol. 6, 1-562, Vol. 6, 1-570, Vol. 6, 1-578
in LCME Vol. 2, 1-39
NTBX34 Vol. 6, 1-593, Vol. 6, 1-601, Vol. 6, 1-611, Vol. 6, 1-621
in LCME Vol. 2, 1-31
NTBX35 Vol. 6, 1-630, Vol. 6, 1-638, Vol. 6, 1-648, Vol. 6, 1-658
in LCME Vol. 2, 1-31
NTBX36 Vol. 6, 1-667, Vol. 6, 1-677, Vol. 6, 1-687
in LCME Vol. 2, 1-13
NTBX71
in LCME Vol. 2, 1-62
NTBX72 Vol. 6, 1-697, Vol. 6, 1-706, Vol. 6, 1-715, Vol. 6, 1-724
in LCME Vol. 2, 1-79
NTCX50
in PDTC Vol. 3, 8-19
NTDX15
in file processor Vol. 1, 7-43
in SuperNode SE CM/SLM Vol. 1, 3-67
NTDX16
in LPP LIS Vol. 2, 3-140
NTEX17 Vol. 6, 1-733, Vol. 6, 1-743, Vol. 6, 1-753, Vol. 6, 1-763, Vol. 6, 1-773
in LCM Vol. 2, 1-39
NTEX20
in ELPP LIS Vol. 1, 5-9
in LPP LIS Vol. 2, 3-36
in SSLPP Vol. 3, 2-7
in SuperNode SE ENI shelf Vol. 2, 4-6
in SuperNode SE LIS Vol. 2, 4-6
NTEX22
in APU in LPP LIS Vol. 2, 3-9
in EIU in SSLPP Vol. 3, 2-17
in EIU in SuperNode SE LIS Vol. 2, 4-13
in FRIU in LPP LIS Vol. 2, 3-68
in FRIU in SSLPP Vol. 3, 2-29
in FRIU SuperNode SE LIS Vol. 2, 4-24
in HLIU in an ELPP LIS Vol. 1, 5-17
in HSLR in an ELPP LIS Vol. 1, 5-27
in LIU7 in LPP LIS Vol. 2, 3-57
in LIU7 in SSLPP Vol. 3, 2-44
in LIU7 in SuperNode SE ENI shelf Vol. 2, 4-38
in LIU7 in SuperNode SE LIS Vol. 2, 4-38
in NIU in LPP LIS Vol. 2, 3-82
in NIU in SSLPP Vol. 3, 2-57
in NIU in SuperNode SE LIS Vol. 2, 4-49
in VPU in LPP LIS Vol. 2, 3-168
in XLIU in LPP LIS Vol. 2, 3-177
in XLIU in SSLPP Vol. 3, 2-105
in XLIU in SuperNode SE LIS Vol. 2, 4-91
NTEX25
in NIU in LPP LIS Vol. 2, 3-82
in NIU in SSLPP Vol. 3, 2-57
in NIU in SuperNode SE LIS Vol. 2, 4-49
NTEX26
in LIU7 in LPP LIS Vol. 2, 3-57
in LIU7 in SSLPP Vol. 3, 2-44
in LIU7 in SuperNode SE ENI shelf Vol. 2, 4-38
in LIU7 in SuperNode SE LIS Vol. 2, 4-38
NTEX28
in NIU in LPP LIS Vol. 2, 3-145
in NIU in SSLPP Vol. 3, 2-57
in NIU in SuperNode SE LIS Vol. 2, 4-49
NTEX30
in FRIU in LPP LIS Vol. 2, 3-68
in FRIU in SSLPP Vol. 3, 2-29
in FRIU in SuperNode SE LIS Vol. 2, 4-24
NTEX31
in FRIU in LPP LIS Vol. 2, 3-68
in FRIU in SSLPP Vol. 3, 2-29
in FRIU in SuperNode SE LIS Vol. 2, 4-24
NTEX54 Vol. 6, 1-783, Vol. 6, 1-800, Vol. 6, 1-817, Vol. 6, 1-834, Vol. 6, 1-851
in LCM Vol. 2, 1-13

NTEX76
in HLIU in an ELPP LIS Vol. 1, 5-17
NTEX78
in HLIU in an ELPP LIS Vol. 1, 5-17
NTFX09
in XLIU in LPP LIS Vol. 2, 3-177
in XLIU in SSLPP Vol. 3, 2-105
in XLIU in SuperNode SE LIS Vol. 2, 4-91
NTFX10
in XLIU in LPP LIS Vol. 2, 3-177
in XLIU in SSLPP Vol. 3, 2-105
in XLIU in SuperNode SE LIS Vol. 2, 4-91
NTFX32AA
in an ISM Vol. 1, 9-92
NTFX42
in ISM Vol. 3, 6-27
NTFX43
in ISM Vol. 3, 6-69
NTMX45 Vol. 6, 1-898
NTMX71 Vol. 6, 1-908, Vol. 6, 1-932, Vol. 6, 1-940
in DTC, DTCI, IDTC, PDTC Vol. 3, 8-19
in ILGC, LGC, LGCI, PLGC Vol. 3, 8-19
in ILTC, LTC, LTCI, PLTC Vol. 3, 8-19
NTMX72 Vol. 6, 1-949, Vol. 6, 1-957, Vol. 6, 1-966, Vol. 6, 1-975, Vol. 6, 1-984, Vol. 6, 1-993
NTMX73 Vol. 7, 1-2, Vol. 7, 1-9, Vol. 7, 1-17, Vol. 7, 1-26, Vol. 7, 1-36, Vol. 7, 1-45
NTMX74 Vol. 7, 1-60, Vol. 7, 1-69, Vol. 7, 1-77, Vol. 7, 1-86, Vol. 7, 1-95, Vol. 7, 1-104
NTMX75 Vol. 7, 1-113, Vol. 7, 1-120, Vol. 7, 1-128, Vol. 7, 1-136, Vol. 7, 1-144, Vol. 7, 1-153
NTMX76 Vol. 7, 1-168, Vol. 7, 1-175, Vol. 7, 1-182, Vol. 7, 1-188, Vol. 7, 1-195, Vol. 7, 1-205
in DTC, DTCI, IDTC, DTCO, PDTC Vol. 3, 8-31
in ILGC, LGC, LGCI, LGCO, PLGC Vol. 3, 8-31
in ILTC, LTC, LTCI, LTCO, PLTC Vol. 3, 8-31
NTMX77 Vol. 7, 1-221, Vol. 7, 1-234, Vol. 7, 1-241, Vol. 7, 1-254, Vol. 7, 1-267, Vol. 7, 1-280, Vol. 7, 1-293, Vol. 7, 1-306, Vol. 7, 1-318
in DTC, DTCI, IDTC, DTCO, PDTC Vol. 3, 8-147
in ILGC, LGC, LGCI, LGCO, PLGC Vol. 3, 8-147
in ILTC, LTC, LTCI, LTCO, PLTC Vol. 3, 8-147
NTMX77 in TMS Vol. 3, 4-48
NTMX79 Vol. 7, 1-333, Vol. 7, 1-343, Vol. 7, 1-349, Vol. 7, 1-359, Vol. 7, 1-370, Vol. 7, 1-380
NTMX81 Vol. 7, 1-397, Vol. 7, 1-409, Vol. 7, 1-421, Vol. 7, 1-592
NTMX82 Vol. 7, 1-465, Vol. 7, 1-476, Vol. 7, 1-486, Vol. 7, 1-496
NTMX87 Vol. 7, 1-508, Vol. 7, 1-528, Vol. 7, 1-548, Vol. 7, 1-571
NTMX97
in VPU in LPP LIS Vol. 2, 3-168
NTMX99
in VPU in LPP LIS Vol. 2, 3-168
NTNX62 in TPC Vol. 3, 5-7
NTNX63 in TPC Vol. 3, 5-12
NTNX64 in TPC Vol. 3, 5-17
NTNX65 in TPC Vol. 3, 5-22
NTNX66 in TPC Vol. 3, 5-27
NTNX68 in TPC Vol. 3, 5-33
NTOM36 keyboard Vol. 3, 5-40
NTOM90 in MP Vol. 3, 5-45
NTOM92 in MP Vol. 3, 5-52
NTRX41 Vol. 7, 1-630, Vol. 7, 1-635, Vol. 7, 1-640, Vol. 7, 1-650
NTRX42 Vol. 7, 1-660, Vol. 7, 1-677, Vol. 7, 1-695, Vol. 7, 1-726, Vol. 7, 1-746
NTRX43 Vol. 7, 1-778, Vol. 7, 1-785, Vol. 7, 1-792, Vol. 7, 1-808
NTRX44 Vol. 7, 1-824, Vol. 7, 1-836, Vol. 7, 1-858
NTRX54 Vol. 7, 1-868, Vol. 7, 1-882
NTRX66 Vol. 7, 1-896
NTSX06
in LTC, LTC, DTC, LGCI, and LTCI Vol. 3, 8-147
card replacement procedutes
NTBX01 Vol. 6, 1-374
cards
inserting Vol. 3, 9-156
removing Vol. 3, 9-156

M

Maintenance
returning cards Vol. 3, 9-184
Media access control address
DBIC provisioning Vol. 6, 1-785, Vol. 6, 1-797, Vol. 6, 1-802, Vol. 6, 1-814, Vol. 6, 1-819, Vol. 6, 1-831, Vol. 6, 1-836, Vol. 6, 1-848, Vol. 6, 1-853, Vol. 6, 1-865

N

NT0X10
card replacement procedures Vol. 4, 1-2, Vol. 4, 1-6, Vol. 4, 1-14, Vol. 4, 1-18, Vol. 4, 1-25, Vol. 4, 1-31, Vol. 4, 1-37, Vol. 4, 1-43
NT0X91
card replacement procedures Vol. 4, 1-61
NT0X91AA
card replacement procedures Vol. 4, 1-49, Vol. 4, 1-90
NT0X91AE
card replacement procedures Vol. 4, 1-49, Vol. 4, 1-96, Vol. 4, 1-105
NT1X76 in MTM
card replacement procedures Vol. 2, 5-2
NT2X06
card replacement procedures Vol. 4, 1-114, Vol. 4, 1-121, Vol. 4, 1-129, Vol. 4, 1-136, Vol. 4, 1-144, Vol. 4, 1-153, Vol. 4, 1-162
NT2X09
card replacement procedures Vol. 4, 1-171, Vol. 4, 1-178, Vol. 4, 1-186, Vol. 4, 1-194, Vol. 4, 1-202, Vol. 4, 1-211, Vol. 4, 1-220
NT2X10
card replacement procedures Vol. 4, 1-229, Vol. 4, 1-233, Vol. 4, 1-237, Vol. 4, 1-244, Vol. 4, 1-251, Vol. 4, 1-258
NT2X11
card replacement procedures Vol. 4, 1-265, Vol. 4, 1-270, Vol. 4, 1-278, Vol. 4, 1-282, Vol. 4, 1-289, Vol. 4, 1-298, Vol. 4, 1-307
NT2X48
card replacement procedures Vol. 4, 1-316, Vol. 4, 1-321, Vol. 4, 1-326
NT2X55
card replacement procedures Vol. 4, 1-331
NT2X57
card replacement procedures Vol. 4, 1-338, Vol. 4, 1-342, Vol. 4, 1-350, Vol. 4, 1-355, Vol. 4, 1-362, Vol. 4, 1-369, Vol. 4, 1-376
NT2X59
card replacement procedures Vol. 4, 1-383, Vol. 4, 1-387, Vol. 4, 1-401, Vol. 4, 1-406, Vol. 4, 1-413, Vol. 4, 1-420, Vol. 4, 1-427
NT2X70
card replacement procedures Vol. 4, 1-434, Vol. 4, 1-441, Vol. 4, 1-464, Vol. 4, 1-478, Vol. 4, 1-490, Vol. 4, 1-498, Vol. 4, 1-506, Vol. 4, 1-517, Vol. 4, 1-526
NT2X70 in TMS
card replacement procedures Vol. 3, 4-8
NT2X70 in TPC
card replacement procedures Vol. 3, 5-2
NT2X90
card replacement procedures Vol. 4, 1-533, Vol. 4, 1-538, Vol. 4, 1-543, Vol. 4, 1-557, Vol. 4, 1-562, Vol. 4, 1-569, Vol. 4, 1-576
NT3X04
card replacement procedures Vol. 4, 1-583
NT3X08AA in MTM
card replacement procedures Vol. 3, 6-64
NT3X09
card replacement procedures Vol. 4, 1-590, Vol. 4, 1-596, Vol. 4, 1-601, Vol. 4, 1-612, Vol. 4, 1-617, Vol. 4, 1-624, Vol. 4, 1-634, Vol. 4, 1-644
NT3X67 in MTM
card replacement procedures Vol. 2, 5-10
NT3X82
card replacement procedures Vol. 4, 1-653
NT3X83
card replacement procedures Vol. 4, 1-660
NT4X97
card replacement procedures Vol. 4, 1-668, Vol. 4, 1-673, Vol. 4, 1-680
NT4X98
card replacement procedures Vol. 4, 1-687, Vol. 4, 1-694
NT6X17
card replacement procedures Vol. 4, 1-703, Vol. 4, 1-707, Vol. 4, 1-711, Vol. 4, 1-715, Vol. 4, 1-723, Vol. 4, 1-731, Vol. 4, 1-739

NT6X18
card replacement procedures Vol. 4, 1-743, Vol. 4, 1-747, Vol. 4, 1-751, Vol. 4, 1-755, Vol. 4, 1-759, Vol. 4, 1-767, Vol. 4, 1-775, Vol. 4, 1-783
NT6X19
card replacement procedures Vol. 4, 1-787, Vol. 4, 1-791, Vol. 4, 1-795, Vol. 4, 1-799, Vol. 4, 1-807, Vol. 4, 1-815, Vol. 4, 1-823
NT6X20
card replacement procedures Vol. 4, 1-827, Vol. 4, 1-831, Vol. 4, 1-835, Vol. 4, 1-839, Vol. 4, 1-847, Vol. 4, 1-855, Vol. 4, 1-863
NT6X21
card replacement procedures Vol. 4, 1-867, Vol. 4, 1-871, Vol. 4, 1-875, Vol. 4, 1-883, Vol. 4, 1-893, Vol. 4, 1-902, Vol. 4, 1-911, Vol. 4, 1-920
NT6X27
card replacement procedures Vol. 4, 1-924, Vol. 4, 1-931, Vol. 4, 1-938
NT6X30
card replacement procedures Vol. 4, 1-945, Vol. 4, 1-960, Vol. 4, 1-974, Vol. 4, 1-988, Vol. 4, 1-1002
NT6X36
card replacement procedures Vol. 4, 1-1021, Vol. 4, 1-1031, Vol. 4, 1-1036
NT6X40
card replacement procedures Vol. 5, 1-2, Vol. 5, 1-14, Vol. 5, 1-26
NT6X41
card replacement procedures Vol. 5, 1-64, Vol. 5, 1-71, Vol. 5, 1-78, Vol. 5, 1-87, Vol. 5, 1-95
NT6X42
card replacement procedures Vol. 5, 1-101, Vol. 5, 1-107, Vol. 5, 1-114, Vol. 5, 1-122
NT6X44
card replacement procedures Vol. 5, 1-130, Vol. 5, 1-138, Vol. 5, 1-144, Vol. 5, 1-158
NT6X45
card replacement procedures Vol. 5, 1-166, Vol. 5, 1-172, Vol. 5, 1-178, Vol. 5, 1-184
NT6X47
card replacement procedures Vol. 5, 1-190, Vol. 5, 1-196, Vol. 5, 1-202
NT6X48
card replacement procedures Vol. 3, 8-72, Vol. 3, 8-82, Vol. 5, 1-208
NT6X50
card replacement procedures Vol. 5, 1-216, Vol. 5, 1-223, Vol. 5, 1-237, Vol. 5, 1-244, Vol. 5, 1-259, Vol. 5, 1-275
NT6X51
card replacement procedures Vol. 5, 1-291, Vol. 5, 1-298, Vol. 5, 1-305, Vol. 5, 1-312, Vol. 5, 1-324, Vol. 5, 1-332, Vol. 5, 1-339, Vol. 5, 1-347
NT6X52
card replacement procedures Vol. 5, 1-355, Vol. 5, 1-361, Vol. 5, 1-367, Vol. 5, 1-373, Vol. 5, 1-384, Vol. 5, 1-392, Vol. 5, 1-401, Vol. 5, 1-410
NT6X53
card replacement procedures Vol. 5, 1-418, Vol. 5, 1-425, Vol. 5, 1-432, Vol. 5, 1-444, Vol. 5, 1-460, Vol. 5, 1-469, Vol. 5, 1-478, Vol. 5, 1-487
NT6X54
card replacement procedures Vol. 5, 1-493, Vol. 5, 1-500, Vol. 5, 1-509, Vol. 5, 1-518, Vol. 5, 1-533, Vol. 5, 1-542, Vol. 5, 1-549, Vol. 5, 1-556
NT6X60
card replacement procedures Vol. 5, 1-565, Vol. 5, 1-572, Vol. 5, 1-579, Vol. 5, 1-587
NT6X69
card replacement procedures Vol. 5, 1-605, Vol. 5, 1-613, Vol. 5, 1-622, Vol. 5, 1-630, Vol. 5, 1-639, Vol. 5, 1-648, Vol. 5, 1-654, Vol. 5, 1-670, Vol. 5, 1-678
NT6X69 in TMS
card replacement procedures Vol. 3, 4-19
NT6X71
card replacement procedures Vol. 5, 1-684, Vol. 5, 1-688, Vol. 5, 1-692, Vol. 5, 1-696, Vol. 5, 1-705, Vol. 5, 1-713, Vol. 5, 1-721
NT6X72
card replacement procedures Vol. 5, 1-725
NT6X73
card replacement procedures Vol. 5, 1-734, Vol. 5, 1-738, Vol. 5, 1-742, Vol. 5, 1-751

NT6X74
card replacement procedures Vol. 5, 1-755, Vol. 5, 1-761, Vol. 5, 1-775, Vol. 5, 1-782, Vol. 5, 1-790, Vol. 5, 1-799, Vol. 5, 1-808
NT6X75
card replacement procedures Vol. 5, 1-817, Vol. 5, 1-824, Vol. 5, 1-831, Vol. 5, 1-838
NT6X76
card replacement procedures Vol. 5, 1-845, Vol. 5, 1-853, Vol. 5, 1-861, Vol. 5, 1-869
NT6X78
card replacement procedures Vol. 5, 1-876, Vol. 5, 1-883, Vol. 5, 1-891, Vol. 5, 1-898, Vol. 5, 1-905, Vol. 5, 1-912, Vol. 5, 1-919, Vol. 5, 1-925, Vol. 5, 1-932, Vol. 5, 1-946
NT6X80
card replacement procedures Vol. 5, 1-951, Vol. 5, 1-957, Vol. 5, 1-964, Vol. 5, 1-972, Vol. 5, 1-981
NT6X85
card replacement procedures Vol. 6, 1-2, Vol. 6, 1-13, Vol. 6, 1-24
NT6X86
card replacement procedures Vol. 6, 1-30, Vol. 6, 1-39
NT6X87
card replacement procedures Vol. 6, 1-48, Vol. 6, 1-56
NT6X92
card replacement procedures Vol. 6, 1-64, Vol. 6, 1-71, Vol. 6, 1-79, Vol. 6, 1-87, Vol. 6, 1-95, Vol. 6, 1-104, Vol. 6, 1-112, Vol. 6, 1-118, Vol. 6, 1-125, Vol. 6, 1-140, Vol. 6, 1-243
NT6X99
card replacement procedures Vol. 6, 1-146, Vol. 6, 1-150, Vol. 6, 1-154, Vol. 6, 1-158, Vol. 6, 1-162, Vol. 6, 1-170, Vol. 6, 1-178, Vol. 6, 1-186
NT6Xseries in TMS
card replacement procedures Vol. 3, 4-17
NT7X05
card replacement procedures Vol. 6, 1-190, Vol. 6, 1-198, Vol. 6, 1-207, Vol. 6, 1-234, Vol. 6, 1-252
NT8X02
card replacement procedures Vol. 6, 1-261, Vol. 6, 1-265
NT8X18
card replacement procedures Vol. 6, 1-270
NTAX74
card replacement procedures Vol. 6, 1-281, Vol. 6, 1-292, Vol. 6, 1-303, Vol. 6, 1-315, Vol. 6, 1-327, Vol. 6, 1-337, Vol. 6, 1-347
NTAX78
card replacement procedures Vol. 6, 1-355, Vol. 6, 1-362, Vol. 6, 1-369
NTBX01
card replacement procedures Vol. 6, 1-374, Vol. 6, 1-381, Vol. 6, 1-390, Vol. 6, 1-399, Vol. 6, 1-408, Vol. 6, 1-417, Vol. 6, 1-423, Vol. 6, 1-430, Vol. 6, 1-437
NTBX01 in TMS
card replacement procedures Vol. 3, 4-30
NTBX02
card replacement procedures Vol. 6, 1-443, Vol. 6, 1-456, Vol. 6, 1-469, Vol. 6, 1-482, Vol. 6, 1-495, Vol. 6, 1-508, Vol. 6, 1-515, Vol. 6, 1-523
NTBX02 in TMS
card replacement procedures Vol. 3, 4-37
NTBX26
card replacement procedures Vol. 6, 1-538, Vol. 6, 1-546, Vol. 6, 1-554
NTBX27
card replacement procedures Vol. 6, 1-562, Vol. 6, 1-570, Vol. 6, 1-578, Vol. 6, 1-586
NTBX34
card replacement procedures Vol. 6, 1-593, Vol. 6, 1-601, Vol. 6, 1-611, Vol. 6, 1-621
NTBX35
card replacement procedures Vol. 6, 1-630, Vol. 6, 1-638, Vol. 6, 1-648, Vol. 6, 1-658
NTBX36
card replacement procedures Vol. 6, 1-667, Vol. 6, 1-677, Vol. 6, 1-687
NTBX72
card replacement procedures Vol. 6, 1-697, Vol. 6, 1-706, Vol. 6, 1-715, Vol. 6, 1-724

NTEX17
card replacement procedures Vol. 6, 1-733, Vol. 6, 1-743, Vol. 6, 1-753, Vol. 6, 1-763, Vol. 6, 1-773
NTEX54
card replacement procedures Vol. 6, 1-783, Vol. 6, 1-800, Vol. 6, 1-817, Vol. 6, 1-834, Vol. 6, 1-851
NTMX45
card replacement procedures Vol. 6, 1-898
NTMX71
card replacement procedures Vol. 6, 1-908, Vol. 6, 1-916, Vol. 6, 1-924, Vol. 6, 1-932, Vol. 6, 1-940
NTMX71, Back plane cards in an XPM
Vol. 3, 8-19
NTMX72
card replacement procedures Vol. 6, 1-949, Vol. 6, 1-957, Vol. 6, 1-966, Vol. 6, 1-975, Vol. 6, 1-984, Vol. 6, 1-993, Vol. 6, 1-1002
NTMX73
card replacement procedures Vol. 7, 1-9, Vol. 7, 1-17, Vol. 7, 1-26, Vol. 7, 1-36, Vol. 7, 1-45, Vol. 7, 1-54
card replacment procedures Vol. 7, 1-2
NTMX74
card replacement procedures Vol. 7, 1-60, Vol. 7, 1-69, Vol. 7, 1-77, Vol. 7, 1-86, Vol. 7, 1-95, Vol. 7, 1-104
NTMX75
card replacement procedures Vol. 7, 1-113, Vol. 7, 1-120, Vol. 7, 1-128, Vol. 7, 1-136, Vol. 7, 1-144, Vol. 7, 1-153, Vol. 7, 1-162
NTMX76
card replacement procedures Vol. 7, 1-168, Vol. 7, 1-175, Vol. 7, 1-182, Vol. 7, 1-188, Vol. 7, 1-195, Vol. 7, 1-205, Vol. 7, 1-214
NTMX77
card replacement procedures Vol. 7, 1-221, Vol. 7, 1-234, Vol. 7, 1-241, Vol. 7, 1-254, Vol. 7, 1-267, Vol. 7, 1-280, Vol. 7, 1-293, Vol. 7, 1-306, Vol. 7, 1-318
NTMX77 in TMS
card replacement procedures Vol. 3, 4-48
NTMX79
card replacement procedures Vol. 7, 1-333, Vol. 7, 1-343, Vol. 7, 1-349, Vol. 7, 1-359, Vol. 7, 1-370, Vol. 7, 1-380, Vol. 7, 1-390
NTMX81
card replacement procedures Vol. 7, 1-397, Vol. 7, 1-409, Vol. 7, 1-421, Vol. 7, 1-435, Vol. 7, 1-451, Vol. 7, 1-592
NTMX82
card replacement procedures Vol. 7, 1-465, Vol. 7, 1-476, Vol. 7, 1-486, Vol. 7, 1-496
NTMX87
card replacement procedures Vol. 7, 1-508, Vol. 7, 1-528, Vol. 7, 1-548, Vol. 7, 1-571
NTNX62 in TPC
card replacement procedures Vol. 3, 5-7
NTNX63 in TPC
card replacement procedures Vol. 3, 5-12
NTNX64 in TPC
card replacement procedures Vol. 3, 5-17
NTNX65 in TPC
card replacement procedures Vol. 3, 5-22
NTNX66 in TPC
card replacement procedures Vol. 3, 5-27
NTNX68 in TPC
card replacement procedures Vol. 3, 5-33
NTOM36 keyboard
card replacement procedures Vol. 3, 5-40
NTOM90 in MP
card replacement procedures Vol. 3, 5-45
NTOM92 in MP
card replacement procedures Vol. 3, 5-52
NTRX41
card replacement procedures Vol. 7, 1-630, Vol. 7, 1-635, Vol. 7, 1-640, Vol. 7, 1-650, Vol. 7, 1-655
NTRX42
card replacement procedures Vol. 7, 1-660, Vol. 7, 1-677, Vol. 7, 1-695, Vol. 7, 1-726, Vol. 7, 1-746, Vol. 7, 1-766
NTRX43
card replacement procedures Vol. 7, 1-778, Vol. 7, 1-785, Vol. 7, 1-792, Vol. 7, 1-808, Vol. 7, 1-816
NTRX44
card replacement procedures Vol. 7, 1-824, Vol. 7, 1-836, Vol. 7, 1-858

NTRX54
card replacement procedures Vol. 7, 1-868, Vol. 7, 1-882, Vol. 7, 1-889
NTRX66
card replacement procedures Vol. 7, 1-896
NTTR46
card replacement procedures Vol. 7, 1-902
NTTR47
card replacement procedures Vol. 7, 1-908
NTTR60
card replacement procedures Vol. 7, 1-914
NTTR66
card replacement procedures Vol. 7, 1-921
NTTR67
card replacement procedures Vol. 7, 1-927
NTTR70
card replacement procedures Vol. 7, 1-934
NTTR71
card replacement procedures Vol. 7, 1-941
NTTR72
card replacement procedures Vol. 7, 1-946
NTTR73
card replacement procedures Vol. 7, 1-952
NTTR74
card replacement procedures Vol. 7, 1-956
NTTR75
card replacement procedures Vol. 7, 1-962
NTTR76
card replacement procedures Vol. 7, 1-970
NTTR77
card replacement procedures Vol. 7, 1-979
NTTR87
card replacement procedures Vol. 7, 1-986

P

placing MP in service (integrated)
card replacement common procedures Vol. 3, 5-57
placing MP in service (standalone)
card replacement common procedures Vol. 3, 9-145

R

removing MP from service (integrated)
card replacement common procedures Vol. 3, 5-62
removing MP from service (standalone)
card replacement common procedures Vol. 3, 9-150
returning cards Vol. 3, 9-184

S

shelf layouts
application processor cabinet
APC cabinet layout Vol. 1, 7-3
file processor shelf Vol. 1, 7-4
storage device shelf Vol. 1, 7-5
common peripheral controller equipment frame
CPCE frame layout Vol. 3, 8-4
DTC with 2 NT6X45's Vol. 3, 8-8
international XPMs with 2 NT6X45's Vol. 3, 8-14
international XPMs with 3 NT6X45's Vol. 3, 8-15
international XPMs with NTMX77 Vol. 3, 8-13
ISDN XPMs with 2 NT6X45's Vol. 3, 8-12
ISDN XPMs with NTMX77 Vol. 3, 8-11
LGC with 2 NT6X45's Vol. 3, 8-9
LGC with NTMX77 Vol. 3, 8-6
LTC with 2 NT6X45's Vol. 3, 8-10
LTC with NTMX77 Vol. 3, 8-7
PCM30 XPMs with 2 NT6X45's Vol. 3, 8-18
PCM30 XPMs with NTMX77 Vol. 3, 8-16, Vol. 3, 8-17
dual plane combined core cabinet
DPCC cabinet layout Vol. 2, 6-3, Vol. 3, 3-3
SuperNode message switch shelf Vol. 2, 6-4
SuperNode system load module shelf Vol. 3, 3-4
enhanced link peripheral processor
ELPP cabinet layout Vol. 1, 5-4
link interface module showing LMS units Vol. 1, 5-6
link interface shelf common fill Vol. 1, 5-7
link interface shelf for DLIUs Vol. 1, 5-8
triple F-bus configuration in ELPP cabinet Vol. 1, 5-5
enhanced multipurpose cabinet
EMC cabinet layout Vol. 3, 2-4
single shelf link peripheral processor, 2-slot ASUs Vol. 3, 2-6
single shelf link peripheral processor, ASU common fill Vol. 3, 2-5

fiber link peripheral processor (SuperNode)
link interface module showing LMS units Vol. 2, 3-6
host ISDN XPMs Vol. 3, 8-3
host XPMs Vol. 3, 8-3
input/output equipment frame
dual disk drive unit shelf Vol. 1, 9-7, Vol. 1, 9-8, Vol. 1, 9-9
input/output controller shelf Vol. 1, 9-5
IOE frame layout Vol. 1, 9-4, Vol. 3, 1-3
remote oscillator shelf Vol. 3, 1-4
single disk drive unit shelf Vol. 1, 9-6
ISDN XPMs (host) Vol. 3, 8-3
line concentrating equipment frame
enhanced line concentrating module Vol. 2, 1-9
ISDN LCE frame layout Vol. 2, 1-5
ISDN line concentrating equipment frame Vol. 2, 1-3, Vol. 3, 7-3
LCE frame layout Vol. 2, 1-4, Vol. 3, 7-3
LCM line drawer Vol. 2, 1-7
LCME line drawer Vol. 2, 1-10
LCMI line drawer (international) Vol. 2, 1-8
line concentrating module Vol. 2, 1-6, Vol. 3, 7-4
line module equipment frame
line drawer layout (metal) Vol. 2, 2-8, Vol. 2, 11-8
line drawer layout (plastic) Vol. 2, 2-7, Vol. 2, 11-7
line drawer shelf Vol. 2, 2-6, Vol. 2, 11-6
line module controller Vol. 2, 2-5, Vol. 2, 11-5
LME frame layout Vol. 2, 11-4
link peripheral processor (SuperNode)
application processor unit Vol. 2, 3-8
CCS7 link interface unit (2-slot, channelized) Vol. 2, 3-8
CCS7 link interface unit (2-slot, non-channelized) Vol. 2, 3-8
Ethernet interface unit (2-slot) Vol. 2, 3-8
frame relay interface unit Vol. 2, 3-8
link interface module showing LMS units Vol. 2, 3-5
link interface shelf common fill, 2-slot ASUs Vol. 2, 3-7
link interface shelf for 2-slot ASUs Vol. 2, 3-8
LPP cabinet layout Vol. 2, 3-4
network interface unit Vol. 2, 3-8
voice processor unit Vol. 2, 3-8
X.25 link interface unit Vol. 2, 3-8
message switch and buffer equipment frame
CCS6 signaling terminal array Vol. 2, 8-8
CCS6 signaling terminal controller array Vol. 2, 8-9
CCS7 signaling terminal array Vol. 2, 8-11
CCS7 signaling terminal group Vol. 2, 8-10
MS6E frame layout Vol. 2, 8-4
MS7E frame layout Vol. 2, 8-6
ST6E frame layout Vol. 2, 8-5
ST7E frame layout Vol. 2, 8-7
network equipment frames
ENET 128K frame layout Vol. 2, 9-8
ENET 64K frame layout Vol. 2, 9-7
ENET shelf Vol. 2, 9-14
NT0X48 NET crosspoint shelf Vol. 2, 9-10
NT0X48 NET frame layout Vol. 2, 9-4
NT0X48 NET interface shelf Vol. 2, 9-9
NT5X13 NETC crosspoint shelf Vol. 2, 9-12
NT5X13 NETC frame layout Vol. 2, 9-5
NT5X13 NETC interface shelf Vol. 2, 9-11
NT8X11 DSN frame layout Vol. 2, 9-6
NX8X11 DSN shelf Vol. 2, 9-13
office alarm unit Vol. 2, 10-3
single core cabinet
enhanced network and interface shelf Vol. 1, 6-5, Vol. 1, 6-6
SCC cabinet layout Vol. 1, 3-3, Vol. 1, 6-3, Vol. 2, 4-3, Vol. 2, 7-3
SuperNode SE computing module/system load module Vol. 1, 3-4
SuperNode SE link interface shelf, 2-slot ASUs Vol. 2, 4-5
SuperNode SE link interface shelf, ASU common fill Vol. 2, 4-4
SuperNode SE message switch shelf Vol. 2, 7-4
SuperNode SE 16K ENET Vol. 1, 6-5
SuperNode SE 16k ENET Vol. 1, 6-3
SuperNode SE 32k Vol. 1, 6-4
trunk module equipment frame
digital recorded announcement machine with NT0X70 processor Vol. 3, 6-9
digital recorded announcement machine with NT4X65 processor Vol. 3, 6-10
integrated service module with NTFX42 processor Vol. 3, 6-12
integrated service module with single-card PMs Vol. 3, 6-13

maintenance trunk module with NT0X70 processor Vol. 3, 6-7
maintenance trunk module with NT4X65 processor Vol. 3, 6-8
office alarm unit with NT0X70 processor Vol. 2, 10-5
office alarm unit with NT4X65 processor Vol. 2, 10-6
service trunk module Vol. 3, 6-11
TME frame layout Vol. 2, 10-4, Vol. 3, 6-4
trunk module with NT0X70 processor Vol. 3, 6-5
trunk module with NT4X65 processor Vol. 3, 6-6
XPMs (host) Vol. 3, 8-3
Star Remote System
Star Module
C-side links mapping
illustrated Vol. 7, 1-459, Vol. 7, 1-993

T

TMS shelf layouts
card replacement common procedures
Vol. 3, 4-2

DMS-100 Family

North American DMS-100

Card Replacement Procedures

Volume 1 of 7

Product Documentation - Dept. 3423
Nortel Networks
P.O. Box 13010
RTP, NC 27709-3010
Telephone: 1-877-662-5669
email: cits@nortelnetworks.com

Copyright © 1996-2001 Nortel Networks,
All Rights Reserved

NORTEL NETWORKS CONFIDENTIAL: The information contained herein is the property of Nortel Networks and is strictly confidential. Except as expressly authorized in writing by Nortel Networks, the holder shall keep all information contained herein confidential, shall disclose the information only to its employees with a need to know, and shall protect the information, in whole or in part, from disclosure and dissemination to third parties with the same degree of care it uses to protect its own confidential information, but with no less than reasonable care. Except as expressly authorized in writing by Nortel Networks, the holder is granted no rights to use the information contained herein.

Information is subject to change without notice. Nortel Networks reserves the right to make changes in design or components as progress in engineering and manufacturing may warrant. Changes or modification to the DMS-100 without the express consent of Nortel Networks may void its warranty and void the user's authority to operate the equipment.

Nortel Networks, the Nortel Networks logo, the Globemark, How the World Shares Ideas, Unified Networks, DMS, DMS-100, Helmsman, MAP, Meridian, Nortel, Northern Telecom, NT, and Supernode are trademarks of Nortel Networks.

Publication number: 297-8021-547
Product release: LET0015 and up
Document release: Standard 14.02
Date: May 2001
Printed in the United States of America

NORTEL NETWORKS™