297-8991-810

DMS-100 Family

XA-Core

Reference Manual

CSP21 Standard 11.02 June 2005

NORTEL NETWORKS

How the world shares ideas.

DMS-100 Family

XA-Core

Reference Manual

Publication number: 297-8991-810
Product release: CSP21
Document release: Standard 11.02
Date: June 2005

Copyright © 2000, 2001, 2002, 2003, 2004, 2005 Nortel Networks,
All Rights Reserved

Published in Canada

NORTEL NETWORKS CONFIDENTIAL: The information contained in this document is the property of Northern Telecom. Except as specifically authorized in writing by Northern Telecom, the holder of this document shall keep the information contained herein confidential and shall protect same in whole or in part from disclosure and dissemination to third parties and use same for evaluation, operation, and maintenance purposes only.

Publication history

June 2005

Standard release 11.02, supporting CSP21. Changes in this edition are as follows:

- Added the following material covering log throttling:
  - a description of log throttling in the chapter "Understanding XA-Core log reports"
  - a description of table LOGTHROT in the chapter "XA-Core data schema overview"
- Added the new IO-overload field, IOOVLD, which replaces the CMICOVLD field. The IOOVLD field is covered in the following places:
  - in the description of the CAP101 log in the chapter "Understanding XA-Core log reports"
  - in the description of the CAPACITY MAP level in the chapter "XA-Core data schema overview"
- Added a description of the new log, XACP310 Sustained Overload, in the chapter "Understanding XA-Core log reports".

January 2005

Standard release 10.03, supporting CSP20. In the chapter "XA-Core MAP levels and user interfaces", in the section on the XACMtc Map level, in the description of the RExTst_ command, deleted the mention of a REx test pre-check, and deleted the statement that the XA-Core does not permit a REx test if the switch occupancy is greater than 40%.

December 2004

Standard release 10.02, supporting CSP20. Changes in this edition are as follows:

- Added material covering the HCMIC circuit pack (NTLX17), which was added in this release. Changes are as follows:

  — In the chapter "Introduction", updated the sections on reset control, time-of-day clocks, interfaces, and shelf layout.

  — In the chapter "XA-Core operational measurements", updated the information on the XACORE OM group.

  — In the chapter "Understanding XA-Core log reports", updated the descriptions of the following log messages: XAC303, XAC304, XAC305, XAC310, XAC312, XAC320, XAC324, XAC326, XAC329, XAC400, XAC420, XAC603, XAC604, XAC605, XAC610, XAC612, XAC620, XAC624, XAC625, XAC626, and XAC629.

  — In the chapter "XA-Core MAP levels and user interfaces", added and updated the following parts.

    – Updated the descriptions of the following commands at the CMIC MAP level: Bsy_, Cntrs_, RTS_, Transl_, and Tst_, and updated the screen illustration.

    – Added the description of the following commands at the CMIC MAP level: Cntrs_ and Uneq_.

    – Updated the descriptions of the following commands at the RTIF MAP level: Bsy_, RTS_, Tst_, Cntrs_, and Uneq_, and updated the screen illustration.

    – Updated the introductory part of the chapter to show the following things: the addition of the Uneq_ command at the CMIC MAP level; the updated lists of devices that can be used in commands at the CMIC and RTIF MAP levels; the updated list of error categories associated with the “thresholds” command parameter; the updated lists of components monitored for SysBTh transitions, associated with the “query” command parameter.

— In the chapter "XA-Core hardware description overview", made the following changes:

  – In the introductory section, added mention of the HCMIC.

  – Added a section describing the HCMIC.

  – Added information to the sections describing the following hardware items: CMIC packlets, RTIF packlets, and ETHR packlets. The added information says that the items are incompatible with the HCMIC.

- Added material covering the checking of hardware and firmware against baseline specifications. Changes are as follows:

  — In the chapter "Understanding XA-Core log reports", added descriptions of the new logs XAC337 and XAC637, and added a new format to the description of log XAC415.

  — In the chapter "XA-Core data schema overview", added sections containing information about tables FWINV and PECINV.

- Updated the document to reflect the deletion of the “complexity” statistic. Changes are as follows:

  — In the chapter "XA-Core operational measurements", deleted the XASCMPLX register from the XASTAT OM group.

  — In the chapter "Understanding XA-Core log reports", deleted the complexity statistic from the CAP100 and CAP101 log reports.

  — In the chapter "Capacity-monitoring tools in an XA-Core", deleted the complexity statistic from the CAPACITY MAP level.

- In the chapter "XA-Core hardware description overview", in the section describing the NTLX02DA PE circuit pack, updated the information about the slot locations occupied by the circuit pack.

- In the chapter "XA-Core hardware description overview", in the section describing the NTLX14CA SM circuit pack, updated the information about the slot locations occupied by the circuit pack.

- In the chapter "XA-Core hardware description overview", in the section describing the NTLX04 HIOP circuit pack, added information about the NTLX04CA version.

- Added material covering the IO-capacity feature. Changes are as follows:

  — In the chapter "XA-Core operational measurements", added a description of the IOCAP OM group.

  — In the chapter "XA-Core data schema overview", in section on table OCFENG, added a description of the IO_WARNING_THRESHOLD office parameter

  — In the chapter "Capacity-monitoring tools in an XA-Core", added descriptions of the IOCAP MAP level and the IOCAPCI command increment.

- In the chapter "XA-Core data schema overview", made the following changes:

  — Added a description of table CMIPADDR.

  — Deleted the description of table DPDATA. (DPDATA was removed in CSP16.)

December 2003

Standard release 09.03, supporting CSP19.

In the chapter "Understanding XA-Core log reports", added information to the “Additional information” section for each of the following logs: CAP100, CAP101, CAP102, and CAP103.

August 2003

Standard release 09.02, supporting CSP19. Changes in this edition are as follows:

- The following changes explain the new way of monitoring the XA-Core for unstable components.

  — In the chapter "XA-Core MAP levels and user interfaces", updated the information about the CNTRS command and its parameters in the introductory part of the chapter, added the CNTRS command in the PE and SM MAP levels, and updated the information about the CNTRS command in the following MAP levels: XAC, IO, AMDI, CMIC, ETHR, RTIF, Disk, and Tape.

  — In the chapter "XA-Core data schema overview", added information that the XA_IO_STATE_CHANGE_ALARM_THRESH office parameter has been deleted from table OFCENG, and briefly explained the new arrangements for monitoring unstable components.

— In the chapter "Understanding XA-Core log reports", updated the description of log XAC415, deleted the description of log XAC320 Cardlist Report, which is no longer in the software, and added descriptions of the following new logs: XAC320 SysBTh Alarm Raised, XAC420 SysBTh Info Changed, and XAC620 SysBTh Alarm Cleared.

- In the chapter "Understanding XA-Core log reports", made the following corrections:

  — Added a section describing the newly added log LOST117.

  — Deleted all mention of the following logs: XAC320 Cardlist Report and XAC335 OC-3 packlet fault log.

  — Added a section describing log XAC418.

  — Added new information about the class field in log XAC310: TOD is not a possible value because you cannot busy a TOD device.

- In the chapter "XA-Core MAP levels and user interfaces", made the following corrections:

  — In Figure 4-6, "XA-Core subsystem menu display," for the XAC MAP level, added the following menu items: item 11 AMDI and item 12 ETHR.

  — In Figure 4-6, "XA-Core subsystem menu display," for the ETHR MAP level, deleted the commands shown for menu items 13 and 16 (Route_ and Trnsl_ respectively).

  — In Figure 4-6, "XA-Core subsystem menu display," for the Disk MAP level, changed the command for menu item 11 from Format to Format_ and added menu item 12 Uneq_. In the screen illustration in the section titled "Disk MAP level", changed the command for menu item 11 from Format to Format_ and added menu item 12 Uneq_. In the same section, added a description of the Uneq_ command.

  — In Figure 4-6, "XA-Core subsystem menu display," for the Tape MAP level, added menu item 12 Uneq_. In the screen illustration in the section titled "Tape MAP level", added menu item 12 Uneq_. In the same section, added a description of the Uneq_ command.

  — Added a trailing underscore to all instances of LoadFW_.

  — Removed LoadFW from the menu items shown in the screen illustration for the RTIF MAP level.

- In the chapter "Capacity-monitoring tools in an XA-Core", corrected the information about the default value for the GTERM field in the SchedMAP MAP level. The correct value is 1%.

- In the chapter "XA-Core hardware description overview", in the NTLX02DA and NTLX14CA sections, updated the information about the slot positions occupied by the processor element (PE) circuit packs and by the shared memory (SM) circuit packs.

- Deleted mention of OM registers XAHIOP and XAMDIPRT, which had been added erroneously in edition 06.02. Both registers had been mentioned in the description of OM group XACORE in the chapter, “XA-Core operational measurements”. XAHIOP had been mentioned in the sections describing logs XAC312 and XAC612.

November 2002

Standard release 08.03, supporting CSP18. Changes in this edition are as follows:

- In the chapter "Understanding XA-Core log reports", added information about the short format of log XACP600.

- Added information about the NTLX07BA tape packlet.

  — In the "Introduction" chapter, added the NTLX07BA tape packlet to the table listing circuit packs and packlets.

  — In the chapter "XA-Core hardware description overview", updated the description of the tape packlet.

- In the chapter "XA-Core data schema overview"

  — added a description of the new LOOPBACK field in table XAMDILNK

  — added information about the office parameter GUARANTEED_TERMINAL_CPU_SHARE in table OFCENG

October 2002

Standard release 08.02 supporting CSP18. Changes in this edition are as follows:

- Added information about the NTLX04BA HIOP circuit pack.
  - — In the "Introduction" chapter, added the NTLX04BA HIOP circuit pack to the table listing circuit packs and packlets.
  - — In the chapter "XA-Core hardware description overview", updated the description of the HIOP circuit pack.
  - — In the chapter "XA-Core MAP levels and user interfaces" updated the information on the AMDI MAP level to cover commands that apply to the AMDI section of the NTLX04BA HIOP circuit pack.
- Added information about the NTLX06AC disk packlet.
  - — In the "Introduction" chapter, added the NTLX06AC disk packlet to the table listing circuit packs and packlets.
  - — In the chapter "XA-Core hardware description overview", updated the description of the disk packlet.
- Changes in the chapter "Understanding XA-Core log reports".
  - — Added a description of XA-Core resource-recovery logs (type XAUD).
  - — Updated the description of the CAP101 log to cover the new CMICOVRLD field.
  - — Deleted the information about the XALL100 log. (The software has been modified so the log no longer appears.)
- In the chapter "Capacity-monitoring tools in an XA-Core" added information on the new CMICOVRLD field in the Capacity MAP level.

October 2002

Standard release 07.05, supporting CSP17. Changes in this edition are as follows:

- In the chapter "Understanding XA-Core log reports", added information about log XALL100.
- In the chapter "XA-Core data schema overview", updated the information on the ORIGTHRES office parameter.

- In the chapter "Capacity-monitoring tools in an XA-Core", made corrections and revisions.

July 2002

Standard release 07.04, supporting CSP17.

- Updated the information about log XACP300.
- In the chapter "XA-Core hardware description overview", updated information about the locations of the following circuit packs: the NTLX02CA PE circuit pack, the NTLX02DA PE circuit pack, and the NTLX14CA SM circuit pack.

May 2002

Standard release 07.03, supporting CSP17.

Updated the information about logs XACP300 and XACP600.

February 2002

Standard release 07.02, supporting CSP17. Major changes in this edition are as follows.

- Added the following chapters, which were formerly chapters in the *XA-Core Maintenance Guide*, 297-8991-511:
  - "Introduction". Added to this document as the first chapter.
  - "Capacity-monitoring tools in an XA-Core". Added to this document as the final chapter.
- In the chapter "Understanding XA-Core log reports", made the following changes and additions.
  - Revised the introductory section.
  - Added information about the new memory blocking logs: XACP300, XACP500, and XACP600.
  - Updated the information for the following logs, which can provide information regarding in-progress upgrades to NTLX02DA PE circuit packs: XAC400, XAC610, and XAC628.
  - Corrected and updated the information on the following logs: CAP100, CAP101, CAP102, and CAP103.

— Added information about related alarms to the descriptions of the following logs: XAC329, XAC330, XAC335, XAC631, XAC635, XAC801, SOS701, and SOS702.

- In the chapter "XA-Core MAP levels and user interfaces", made the following changes and additions.

  — The chapter name is expanded. The former name was “XA-Core MAP levels”.

  — added information about the new shelf parameter of the Query command at all MAP levels.

  — added information about the new Cntrs_ command at the following MAP levels: XAC, IO, AMDI, CMIC, ETHR, RTIF, Disk, and Tape.

  — added information about the requirement for the user to confirm a BSY command that uses the FORCE option at the following MAP levels: IO, AMDI, CMIC, ETHR, RTIF, Disk, and Tape

  — added mention that in the AMDI MAP level, the Bsy, Rts, and Tst commands can be applied to AMDI ports

  — Added information on RTIF commands. This material was previously located in the *XA-Core Maintenance Guide*, 297-8991-511.

- In the chapter "XA-Core hardware description overview", added a section on the NTLX02DA PE circuit pack.

- In the chapter "XA-Core data schema overview", added new material.

  — Added mention of the new value assigned to office parameter ORIGTHRES.

  — Added information about the new XA_IO_STATE_CHANGE_THRESH office parameter.

November 2001

Standard release 06.02, supporting CSP16

- In the chapter, “XA-Core operational measurements”, added two OMs, XAHIOP and XAMDIPRT, to OM group XACORE.

- In the chapter, "Understanding XA-Core log reports", added mention of the high performance input/output processor (HIOP) CP to the information about the following logs: XAC312, XAC324, XAC 330, XAC400, XAC612, XAC624, XAC630, XAC631, XAC632, XAC633, XAC634, and XAC635. Also in this chapter, added logs XAC310, XAC641, SOS701, SOS702, and SOS703.

- In the chapter, “XA-Core MAP levels”, updated information about the following MAP levels: IO, RTIF, AMDI, and ETHR. Screens have been reformatted to handle HIOP circuit packs.

- In the chapter, "XA-Core hardware description overview", added mention of the 7+1 PE configuration. Also in this chapter, added a section describing the HIOP circuit pack.

- In the chapter, “XA-Core data schema overview”, added mention of office parameters PASSWORD_SECURITY and SNTP_CLIENT. Also in this chapter, added updated information about the following office parameters: NCCBS, NUMCPWAKE, NUMPERMEXT, and CPSTACKSIZE.

April 2001

Standard release 05.02, supporting CSP15

- In the chapter, “XA-Core operational measurements”, revised the introductory pages.

- In the chapter, “XA-Core MAP levels”, in the command-hierarchy illustration, added the uneq command on the IO, PE, SM, and ETHR MAP levels, corrected the menu-item number of the uneq command on the AMDI and ETHR levels, and added a description of the uneq command on the IO level.

- Revised illustrations of various MAP screens.

April 2001

Standard release 05.01, supporting CSP15

- In the chapter, "Understanding XA-Core log reports", added new messages for logs XAC302 and XAC333, and updated the formats of the following logs: XAC300, XAC302, XAC303, XAC304, XAC305, XAC306, XAC307, XAC309, XAC312, XAC322, XAC323, XAC324, XAC329, XAC600, XAC602, XAC603, XAC604, XAC605, XAC606, XAC607, XAC609, XAC610, XAC612, XAC622, XAC623, XAC624, XAC628, and XAC629.

- In the chapter, “XA-Core MAP levels”, added mention of a message displayed in the PE MAP level when you exceed the allowable number of PE circuit packs. Also in this chapter, added mention of new messages regarding the reasons for failures of the LoadFW command.

- In the chapter, "XA-Core hardware description overview", added information about the locations in which the following can be installed: the NTLX02CA PE circuit pack and the NTLX09AA Ethernet packlet.

October 2000

Standard release 04.02. Content maintenance and revisions.

August 2000

Standard release 04.01

- Add Ethernet interface packlet, NTLX09AA, ETHR MAP level and commands required for trials of Succession Network solutions with IP access. The Ethernet packlet is scheduled for general availability in CSP15.

- Added OM groups XACPOM, XASTAT, and XACSRVC, and updated group XACORE.

- Added capacity logs CAP100, CAP101, CAP102, and CAP103.

May 2000

Standard release 03.02

- Added AMDI related logs XAC309, XAC335 and XAC609.

- Updated OMgrp XA-Core with AMDI information

- Added AMDI MAP level.

March 2000

Standard release 03.01. Updated processor element (PE) and shared memory (SM) configurations.

November 1999

Standard release 02.02. Update for NTLX02CA processor element card.

August 1999

Standard release 02.01. Updates and format cleanup for CSP12, Gate 2.

June 1999

Standard release 01.01. First release of the document for CSP10.4, Gate 2.

Contents

Reference Manual

About this document **xxi**

Manual organization xxi
Introduction xxi
Operational measurements xxi
Log reports xxi
MAP levels and commands xxii
Hardware descriptions xxii
Data schema xxii
Capacity-monitoring tools xxii
How to check the version and issue of this document xxii
References in this document xxii

1 Introduction **1-1**

System architecture of DMS SuperNode and SuperNode SE switches 1-1
Cabinet layouts of DMS SuperNode and SuperNode SE switches 1-3
XA-Core architecture in DMS SuperNode and SuperNode SE switches 1-6
Processor and memory 1-7
File system 1-7
In-service spares 1-7
Reset control 1-7
Bus termination 1-8
Time of day clocks 1-8
Power supply 1-8
Interfaces 1-9
MS support for XA-Core 1-11
XA-Core circuit packs and packlets 1-12
Visual indicators on circuit pack 1-13
Live-inserted circuit pack 1-14
XA-Core shelf design 1-14
Shelf layout 1-14
Restrictions for an XA-Core shelf in a SuperNode SE (NTLX01BA) cabinet 1-17

2 XA-Core operational measurements 2-1

Introduction 2-1
Types of OM registers 2-1
Peg registers 2-1
Usage registers 2-2
High-watermark registers 2-2
XA-Core OM groups 2-3
OM group XACORE 2-5
OM group XACPOM 2-33
OM group XACSRVC 2-39
OM group XASTAT 2-53
OM group IOCAP 2-63

3 Understanding XA-Core log reports 3-1

Introduction 3-1
Log format 3-1
Standard (STD) log header 3-1
Log body 3-3
Event types 3-7
Action event types 3-7
Service summary event type 3-9
Information event type 3-9
Exception event type 3-10
Log types 3-10
XA-Core logs 3-10
XA-Core memory blocking logs 3-10
Capacity logs 3-10
Lost logs 3-11
Footprint logs (type FRPT) 3-11
Time-of-day logs 3-11
Input/output audit logs (type IOAU) 3-12
XA-Core resource-recovery logs (type XAUD) 3-12
Log throttling 3-13
CAP100 3-15
CAP101 3-19
CAP102 3-23
CAP103 3-27
LOST110 3-31
LOST111 3-35
LOST116 3-39
LOST117 3-43
SOS701 3-47
SOS702 3-49
SOS703 3-51
XAC300 LowSM 3-53
XAC302 LowPE 3-61
XAC303 MScomm (Message Switch Communication) 3-69
XAC304 TOD (Time of Day Clock) 3-77
XAC305 RTIF (Reset Terminal Interface) 3-85
XAC306 DISK 3-93

XAC307 Tape 3-99
XAC308 Image Test Report 3-105
XAC309 AMDI 3-111
XAC310 Card Manual Busy 3-117
XAC312 IOP 3-121
XAC320 SysBTh Alarm Raised 3-127
XAC321 WgSlot (Shelf Audit Failure - Card Configuration) 3-133
XAC322 PETrbl 3-137
XAC323 SMTrbl 3-143
XAC324 IOTrbl 3-149
XAC325 RIBKEY Detected 3-155
XAC326 MS Link Configuration Mismatch 3-159
XAC327 WgSlot (Card Inserted into Wrong Slot) 3-163
XAC329 Ethernet 3-167
XAC330 Firmware Mismatch 3-173
XAC333 Firmware Loading Failure 3-177
XAC337 Baseln Alarm Raised 3-181
XAC400 XA-Core Summary Report 3-185
XAC413 RExSch (REx Schedule Failure) 3-189
XAC415 Routine Exercise (REx) Report 3-191
XAC418 Split (Entry to Split Mode Failed) 195
XAC420 SysBTh Ctrl Changed 197
XAC600 LowSM Condition Cleared 3-201
XAC601 MemLim Condition Cleared 3-205
XAC602 LowPE Condition Cleared 3-207
XAC603 MScomm Alarm Cleared 3-211
XAC604 TOD Alarm Cleared 3-215
XAC605 RTIF Alarm Cleared 3-219
XAC606 Disk Alarm Cleared 3-223
XAC607 Tape Alarm Cleared 3-227
XAC608 Test Passed/Alarm Cleared 3-231
XAC609 AMDI Link Condition Cleared 3-233
XAC610 Card Returned to Service 3-237
XAC612 IOP Alarm Cleared 3-241
XAC613 RExSch Alarm Cleared 3-245
XAC614 XATrap Alarm Cleared 3-247
XAC615 REx Started 3-249
XAC618 Split (Split Mode Entered) 3-251
XAC619 Split Mode Exited 3-255
XAC620 SysBTh Alarm Cleared 257
XAC622 PETrbl Alarm Cleared 3-259
XAC623 SMTrbl Alarm Cleared 3-263
XAC624 IOTrbl Alarm Cleared 3-267
XAC625 RIBKEY Removed 3-271
XAC626 MS Link Configuration Restored 3-275
XAC627 WgSlot Cleared (Card Removed) 3-279
XAC628 Provisioning/Deprovisioning 3-281
XAC629 Ethernet cleared 3-285
XAC630 Firmware Mismatch Cleared 3-289
XAC631 Firmware Soaking Started 3-291
XAC632 Firmware Soaking Completed 3-293

XAC633 Firmware Loading Started 3-295
XAC634 Firmware Loading Completed 3-297
XAC635 Firmware Soaking in Progress 3-299
XAC637 Baseln Alarm Cleared 3-301
XAC640 Manual Test Report 3-303
XAC641 Alarm Enable/Disable Notification 3-307
XAC801 MemLim (Memory Limit) 3-309
XAC814 XATrap 3-311
XACP300 Memory Blocking High 3-313
XACP310 Sustained Overload 3-315
XACP500 Memory Blocking Normal 3-317
XACP600 Memory Blocking Summary 3-319

4 XA-Core MAP levels and user interfaces 4-1

Introduction 4-1
- MAP features and functions 4-1

XA-Core MAP hierarchy 4-2
XA-Core MAP layout 4-4
- Alarm banner 4-5
- MAP subsystem status summary field 4-6
- MAP shelf layout area 4-10
- MAP command menu 4-12
- MAP command interpreter output area 4-12
- MAP command interpreter input area 4-12
- MAP user and time display area 4-12

MAP commands 4-12
- Menu commands 4-13
- Hidden commands 4-13
- MAP command characteristics 4-13
- MAP command parameters 4-17
- Command options 4-25
- Command parameter and option use 4-26

Error messages 4-33
- Device error messages 4-35
- Warning messages 4-36
- Response messages 4-36

XAC MAP level 4-37
XACMtc MAP level 4-63
Shared Memory (SM) MAP level 4-91
Processor Element (PE) MAP level 4-121
IO MAP level 4-155
AMDI MAP level 4-187
CMIC MAP level 4-219
ETHR MAP level 4-255
RTIF MAP level 4-289
Disk MAP level 4-321
Tape MAP level 4-351
Reset terminal interface (RTIF) commands 4-379

5 XA-Core hardware description overview 5-1

Product overview 5-1
NT9X13DG 5-5
NT9X13NB 5-9
NT9X17AD 5-13
NT9X63AA/AB 5-19
NTLX0101 5-31
NTLX01AA 5-33
NTLX01BA 5-37
NTLX01CA 5-41
NTLX02AA 5-43
NTLX02CA 5-55
NTLX02DA 5-67
NTLX03AA/BA 5-71
NTLX03AB/BB 5-89
NTLX04 5-107
NTLX05AA 5-113
NTLX05AB 5-125
NTLX05BA 5-139
NTLX06 5-151
NTLX07AA/BA 5-159
NTLX08 5-167
NTLX09AA 5-177
NTLX10AA 5-189
NTLX11AA 5-193
NTLX1101 5-195
NTLX12AA 5-203
NTLX14CA 5-213
NTLX17 5-227
NTLX20AA 5-233
NTLX20BA 5-237

6 XA-Core data schema overview 6-1

Sources of information about the data schema 6-1
Data schema overview 6-1
Table descriptions 6-1
- Table name 6-2
- Overview 6-2
- Functional description 6-2
- Datafill sequence and implications 6-2
- Table size 6-2
- Field descriptions 6-2

Terminology 6-2
- Datafill example 6-3
- Table history 6-3
- Supplementary information 6-3

XAMDILNK 6-5
XACINV 6-9
XAFWLOAD 6-11
FWINV 6-15

PECINV 19
XASHELF 6-21
OFCENG 6-23
OFCSTD 6-35
CMIPADDR 6-37
LOGTHROT 6-43

7 Capacity-monitoring tools in an XA-Core 7-1

Overview 7-1
Related operational measurements 7-5
Related logs 7-6
Related office parameters 7-6
Capacity MAP level 7-7
SchedMAP MAP level 7-21
Detail MAP level 7-31
IOCAP MAP level 7-41

About this document

This document contains reference information for an XA-Core in a SuperNode or SuperNode SE.

Manual organization

This document is divided into chapters that cover the following topics:

- introduction
- operational measurements
- log reports
- MAP levels and commands
- hardware descriptions
- data schema
- capacity-monitoring tools

Introduction

The introduction contains a brief overview of the XA-Core.

Operational measurements

The operational measurement chapter describes the purpose and use of the XA-Core operational measurements. Operating company personnel use the DMS operational measurement (OM) system to obtain information on the performance and use of DMS SuperNode and SuperNode SE system components.

Log reports

The Log report chapter describes the format and information contained in the XA-Core log reports. Log reports are a primary source of information to monitor the components of the XA-Core. XA-Core log reports provide the following information:

- XA-Core component faults
- system tests

- alarm correction activities
- alarm clear conditions

MAP levels and commands

The MAP level and commands section provides a description about the maintenance and administration position (MAP) interface and commands. The MAP level system provides a visible and interactive means to monitor and maintain the XA-Core system. The MAP system displays real-time information on the current working status of the XA-Core system.

Hardware descriptions

The hardware description chapter provides functional descriptions and some specifications about the XA-Core shelf hardware components.

Data schema

The data schema chapter describes how to prepare office-dependent data for use in the XA-Core system.

Capacity-monitoring tools

The chapter on capacity-monitoring tools provides a description of the following MAP levels: Capacity, SchedMAP, and Detail.

How to check the version and issue of this document

This document uses numbers, for example 01.01, to indicate the version and issue of the document.

The first two digits indicate the version. The version number increases with each update to support a new software release. For example, the first release of a document is 01.01. In the next software release cycle, the first release of the same document is 02.01.

The second two digits indicate the issue. The issue number increases with each revision when the document is released again in the same software release cycle. For example, the second release of a document in the same software release cycle is 01.02.

References in this document

This document refers to the following documents:

- *Nonmenu Commands Historical Reference Manual* (vol. 2), 297-1001-822
- *DMS Family Commands Reference Manual*, 297-1001-822
- *Office Parameters Reference Manual*, 297-8001-855 (North American market) or 297-9051-855 (International market)
- *XA-Core Maintenance Manual*, 297-8991-510

1 Introduction

This chapter provides a summary of the DMS SuperNode and SuperNode SE switches and the architecture of the eXtended Architecture Core (XA-Core).

This chapter includes the following sections:

- System architecture of DMS SuperNode and SuperNode SE switches
- Cabinet layouts of DMS SuperNode and SuperNode SE switches
- XA-Core architecture in DMS SuperNode and SuperNode SE switches
- XA-Core configurations in DMS SuperNode and SuperNode SE switches

System architecture of DMS SuperNode and SuperNode SE switches

The DMS SuperNode and SuperNode SE switches share the following common components:

- DMS-core
- DMS-bus
- DMS-link

The DMS-core provides computing and data storage resources. The DMS-core can have one of two types. One type of the DMS-core is a computing module (CM) and the second type is an XA-Core. This document describes the XA-Core type of DMS-core and not the CM type. The XA-Core type of DMS-core has three main modules of shared memory (SM), processing element (PE), and input/output processor (IOP).

The DMS-bus processes and sends messages to nodes in the SuperNode and SuperNode SE switches. The DMS-bus has two load-sharing message switches (MS).

The DMS-link allows the DMS-core and DMS-bus to communicate in the SuperNode and SuperNode SE switches. The DMS-link is the software structure which does signaling standards for the public network.

Other modules the DMS SuperNode and SuperNode SE switches can have are:

- Enhanced network (ENET)
- Link peripheral processor (LPP)
- Input/output controller (IOC)
- CCS7 link interface unit (LIU7)
- Peripheral modules (PM)
- Other peripherals

Figure 1-1 shows the system architecture of the XA-Core in a DMS SuperNode switch.

Figure 1-1 XA-Core in the architecture of the DMS SuperNode switch

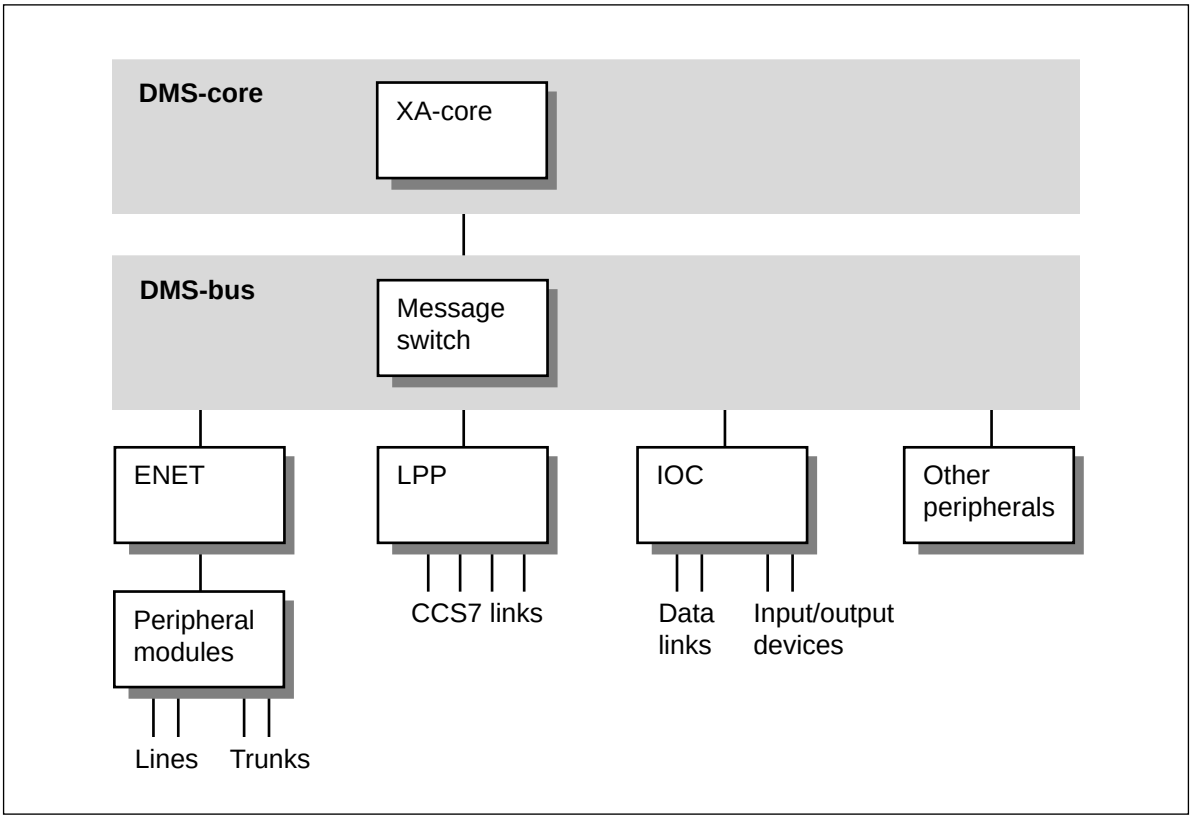

The DMS SuperNode SE can also have a 16K ENET and LIU7s. The 16K ENET provides voice and data signal switching for nodes in the DMS SuperNode SE switch. The 16K ENET also provides message routes to the MS. The LIU7 provides CCS7 message processing.

Figure 1-2 shows the system architecture of the XA-Core in a DMS SuperNode SE switch.

Figure 1-2 XA-Core in the architecture of the DMS SuperNode SE switch

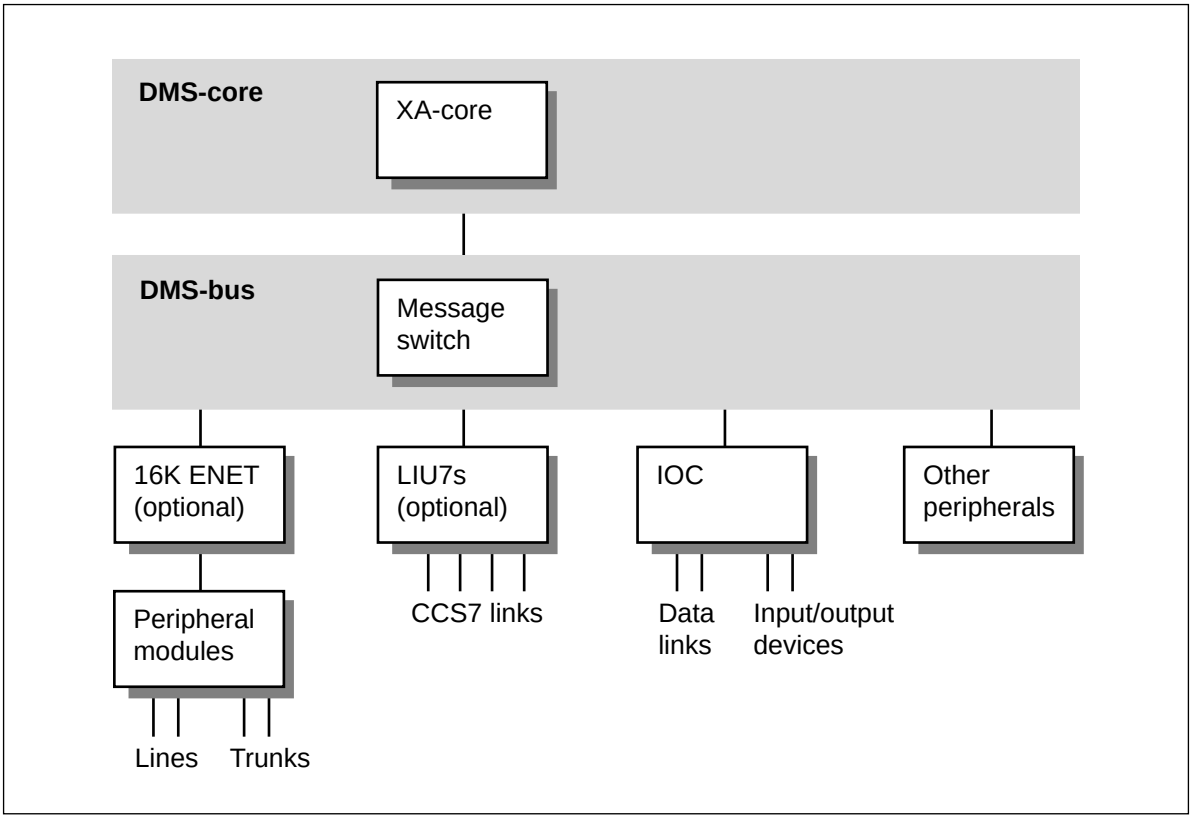

Cabinet layouts of DMS SuperNode and SuperNode SE switches

The XA-Core hardware is on an XA-Core shelf in a cabinet. The following list shows three types of cabinets that can have an XA-Core shelf.

- NTLX01AA dual plane combined XA-Core cabinet (DPCX)
- NTLX01BA SuperNode XA-Core cabinet (SNXA)
- NTLX01CA extension XA-Core cabinet (EXTX)

Figure 1-3 shows the NTLX01AA DPCX cabinet layout for XA-Core in a DMS SuperNode switch.

Figure 1-3 XA-Core in the SuperNode cabinet layout

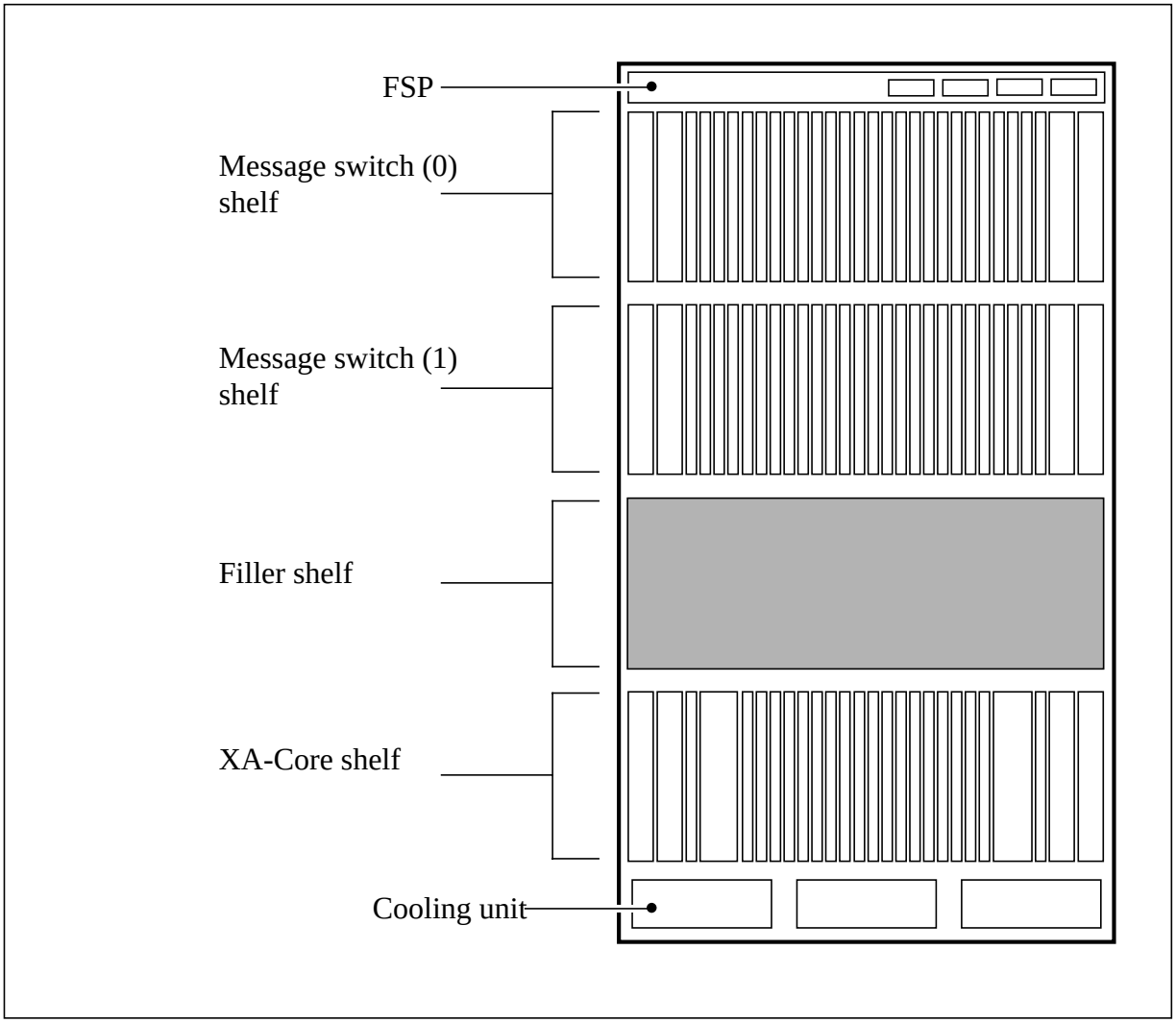

Figure 1-4 shows the NTLX01BA SNXA cabinet layout for XA-Core for XA-Core in a DMS SuperNode SE switch.

Figure 1-4 XA-Core in the SuperNode SE cabinet layout

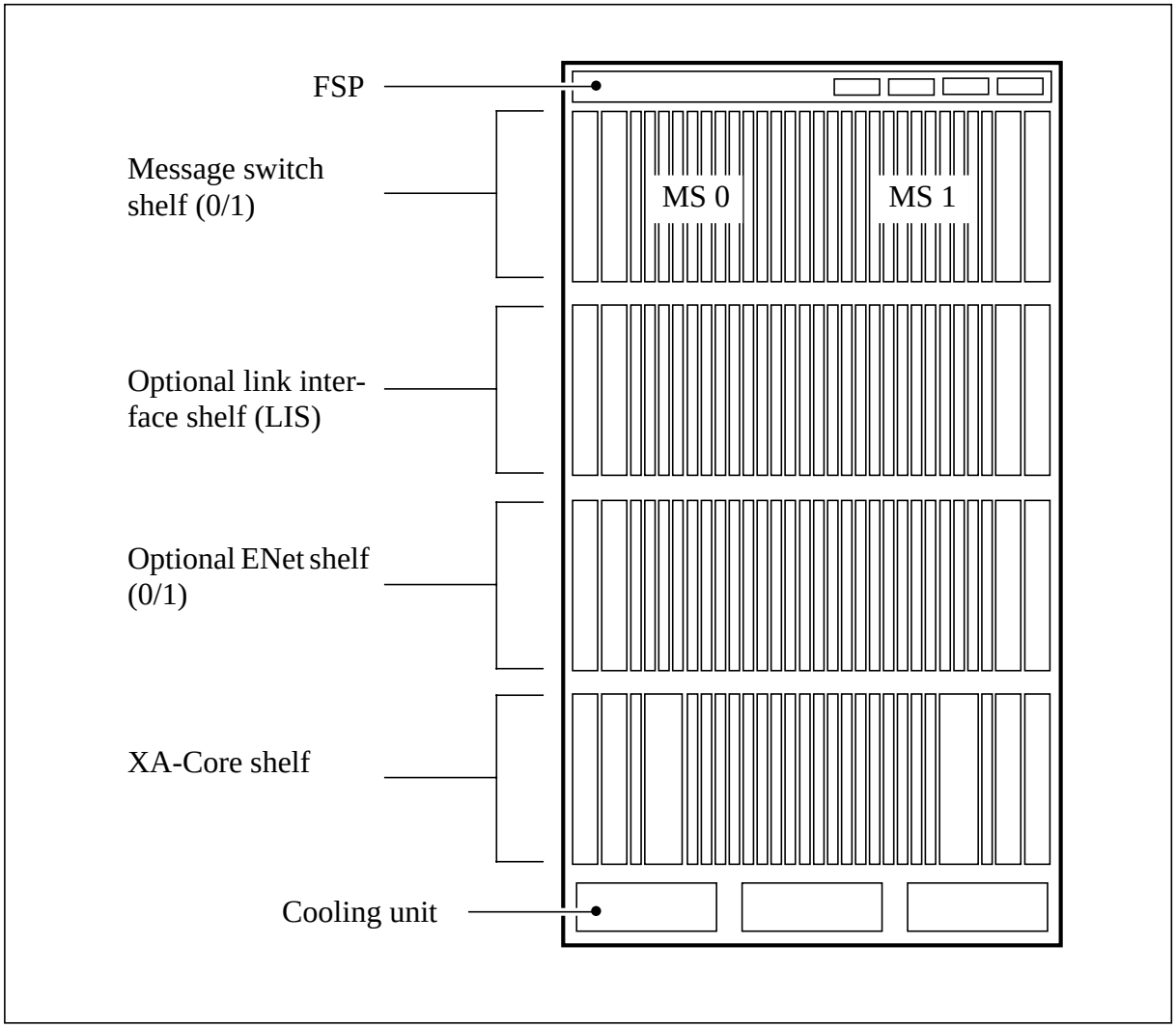

Figure 1-5 shows the NTLX01CA EXTX extension cabinet layout for XA-Core in a DMS SuperNode and DMS SuperNode SE switch.

Figure 1-5 XA-Core in the extension cabinet layout

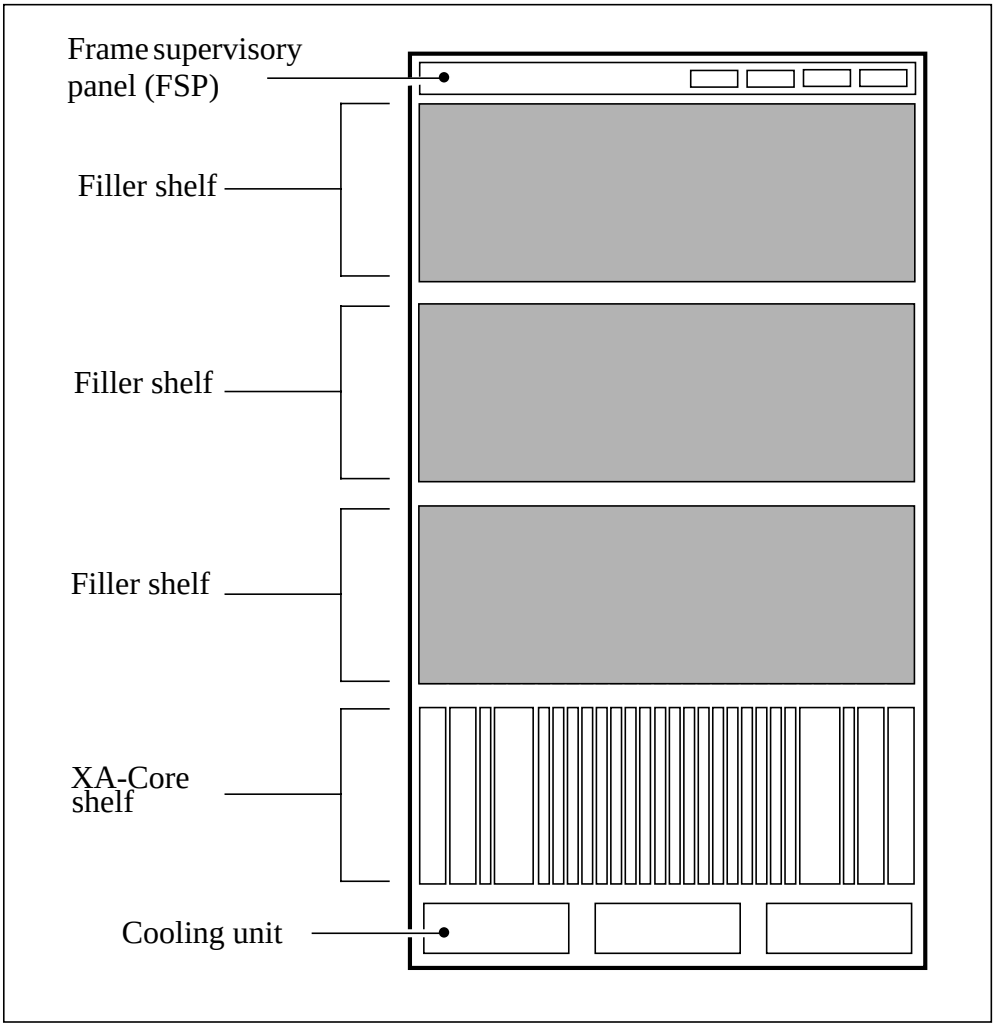

XA-Core architecture in DMS SuperNode and SuperNode SE switches

The XA-Core architecture is the same for SuperNode and SuperNode SE switches. The XA-Core contains the following components:

- processor and memory
- interfaces
- reset control
- bus termination
- time of day (TOD) clocks
- point-of-use power supply (PUPS)

Processor and memory

The processor and memory controls call processing, configuration, and maintenance of the switch. The processor and memory include the following circuit packs.

- processor element (PE) circuit packs (NTLX02)
- shared memory (SM) circuit packs (NTLX14)

File system

The XA-Core has a logical file system (LFS) and a fault tolerant file system (FTFS). The LFS does not depend on the device type. An LFS-to-FTFS interface gives the LFS access to the FTFS volumes. The interface transfers LFS operation requests into FTFS operation requests. The FTFS provides the following to XA-Core.

- volume directories and the capability for directories in a hierarchy structure with path names
- a configuration for disk cache
- extent-based system for disk files
- application registration for file system event notification

In-service spares

All installed spares in XA-Core are in an in-service mode. XA-Core automatically places the spares into replacement use for other equipment that goes out of service. Replacement of equipment that goes out of service requires no manual maintenance action. XA-Core has hot insertion and removal of circuit packs and packlets.

Reset control

The reset control provides a utility for a local or remote reset of the XA-Core. The reset control displays the status of total XA-Core processing. The reset control also has command interpreter (CI) capability but no display of menu-type levels of the maintenance and administration position (MAP). The reset terminal interface (RTIF) is an interface to a display terminal for reset control. The RTIF can be a local or a remote terminal. A remote RTIF terminal can connect through a modem to the XA-Core. The RTIF interface protocol for the XA-Core are as follows.

- RS-232 (local or remote)
- RS-422 (remote)
- current loop (local)

The reset capability in an XA-Core shelf is in either of the following:

- the RS-232/RS-422 serial interface packlets (NTLX08)
- the RTIF sections of the HCMIC circuit packs (NTLX17)

XA-Core status information of the reset control display indicates the following:

- heartbeat on operation of the switch
- status during a boot or reset
- information on RTIF hardware
- results of diagnostics and tests when power applied
- node name of RTIF

Bus termination

The single slot circuit pack filler (NTLX20BA) is the terminator circuit pack for the XA-Core midplane. The terminator circuit pack is in XA-Core slots of the PE, SM, and IOP that are not in use.

Time of day clocks

The time of day (TOD) clocks provide link synchronization of the XA-Core to the clock subsystem of the MS. If the XA-Core contains CMIC packlets (NTLX05AA/AB), the packlets contain the TOD clocks. For each packlet, one TOD clock is displayed in the MAP interface. If the XA-Core contains HCMIC circuit packs (NTLX17), the CMIC section of each one contains the TOD clocks. For each HCMIC circuit pack, two TOD clocks are displayed in the MAP interface. A TOD update message from the MS maintains TOD accuracy.

Power supply

The power supply provides power for the XA-Core shelf. The power distribution center (PDC) provides power on three power feeds for each of the A and B battery power feeds. Two shelf interface module (SIM) circuit packs (NTLX12) provide power interconnection for A and B battery power feeds. Each SIM circuit pack provides three power feeds for either the A or B battery for a DMS SuperNode switch. A DMS SuperNode SE switch has two power feeds connected for each of the A and B battery power feeds. DMS SuperNode SE has no use for the third power feeds of both the A and B battery power feeds. The power feeds connect to the point-of-use power supplies (PUPS) on the hardware modules. A dc to dc converter in the PUPS supplies local power to the hardware modules.

When the A and B -48 Volts power feeds are balanced, both feeds share the load equally to the XA-Core. If the two feeds have different voltages, and if the difference is 0.5 V or more, the higher-voltage feed takes the vast majority of

the load. This is normal and poses no risk to the office. If the feed carrying the load were to fail, the other feed then becomes the higher-voltage feed, and it immediately takes over the load without impact to the XA-Core.

In a similar manner, if the XA-Core is running on backup battery power, the draw is equal if the voltages are equal. Most power plants have batteries with unequal draws, so one battery takes most of the load. As that battery draws down, the other takes over.

Interfaces

The interfaces allow XA-Core to communicate with other nodes in the switch and with storage devices. The interfaces with other nodes in the switch are through the MS. Communication between the XA-Core and the MS is over Core-MS interconnect (CMIC) links. CMIC links use the octal carrier level 3 (OC-3) rate. The interfaces with storage devices support the storage of billing records, logs, load images, and other file system records. A direct memory access (DMA) device connects the XA-Core directly with the MS and storage devices. The interfaces include the following:

- one of the following types of CMIC hardware in the XA-Core, for CMIC links: OC-3 two-port interface packlets (NTLX05AA/AB) or high performance CMIC circuit packs (NTLX17)
- disk drive packlets (NTLX06)
- digital audio tape (DAT) tape drive packlets (NTLX07)
- RS-232/RS-422 serial interface packlets (NTLX08) for RTIF terminals
- input/output processor (IOP) circuit packs (NTLX03), which house the packlets

Figure 1-6 shows the CMIC links for DMS SuperNode.

Figure 1-6 XA-Core to MS port connections for DMS SuperNode

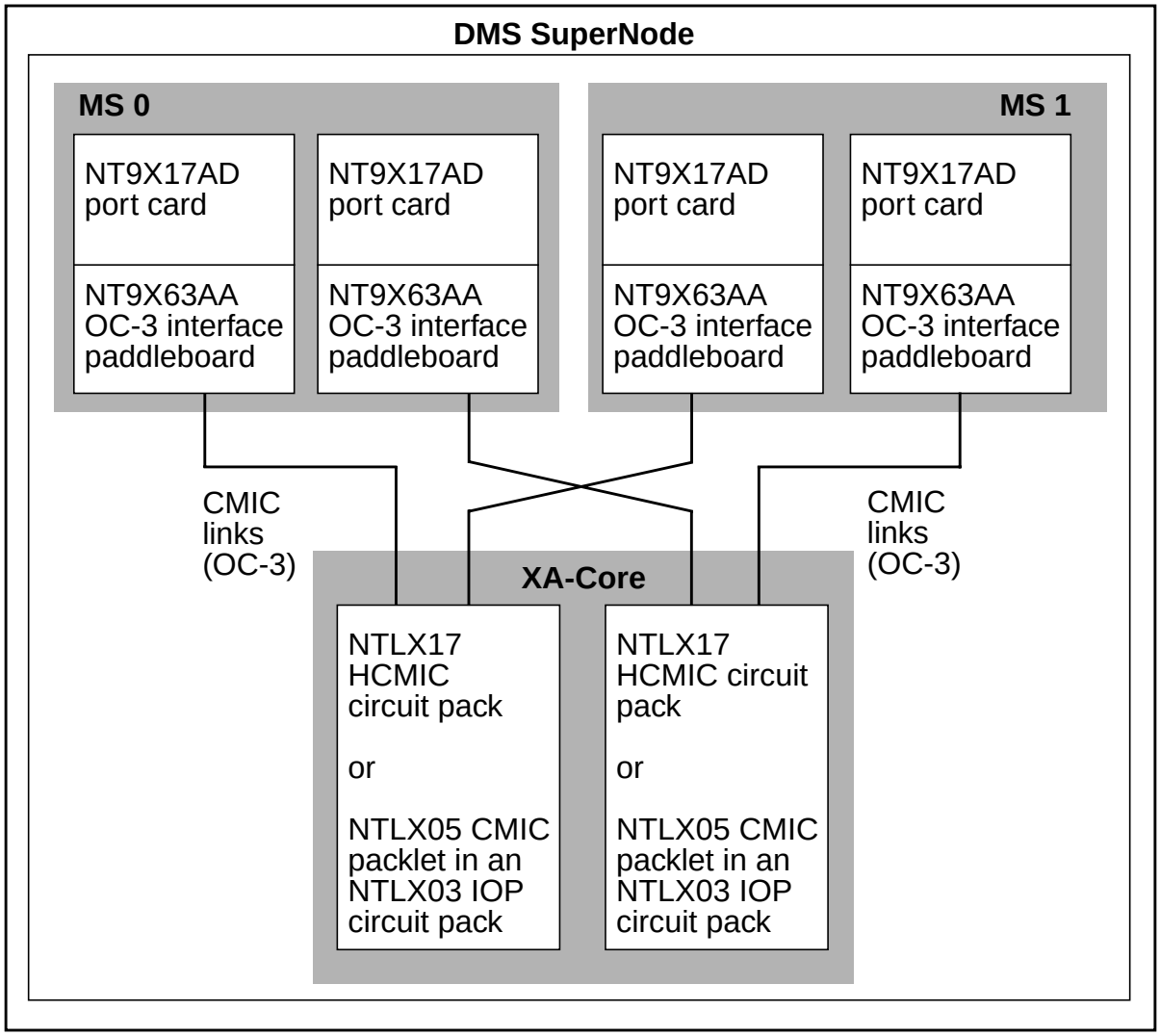

Figure 1-7 shows the CMIC links for DMS SuperNode SE.

Figure 1-7 XA-Core to MS port connections for DMS SuperNode SE

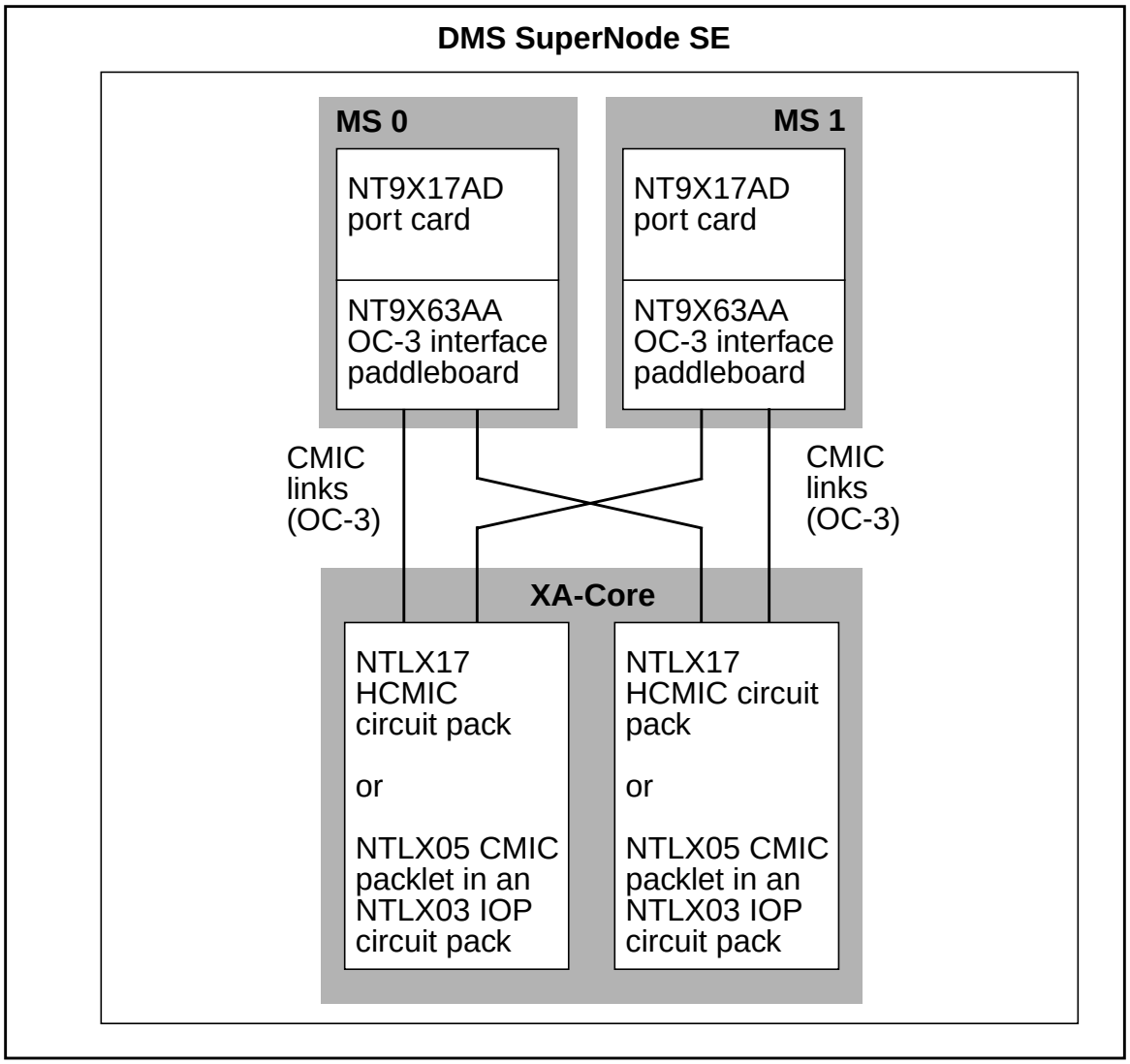

MS support for XA-Core

Optical carrier level 3 (OC-3) links provide XA-Core communication with the DMS message switch (MS). In the XA-Core, the OC-3 links are terminated either by OC-3 two-port interface (CMIC) packlets (NTLX05) or by HCMIC circuit packs (NTLX17AA). The MS needs OC-3 interface paddle boards (NT9X63) to terminate the CMIC links. The MS also needs central processing unit (CPU) circuit packs (NT9X13) and port circuit packs (NT9X17) that support XA-Core.

Table 1-1 lists the circuit packs and paddle boards that the MS needs to support the XA-Core. The MS needs the listed circuit packs and paddle boards in an

XA-Core configuration that is different from the computing module (CM) configuration. The MS needs the listed circuit packs and paddle boards plus other hardware in an MS shelf of the SuperNode and SuperNode SE cabinets.

Table 1-1 MS circuit packs and paddle boards to support XA-Core

PEC	Version	Name	Description
NT9X13	DG	CPU circuit pack	16-MHz/16-Mbyte CPU in a first-time installation of a SuperNode cabinet or to upgrade from an NT9X13DD CPU circuit pack in a SuperNode cabinet
NT9X13	NB	CPU circuit pack	16-MHz/16-Mbyte CPU in a first-time installation of a SuperNode SE cabinet or to upgrade from an NT9X13NA CPU in a SuperNode SE cabinet
NT9X17	AD	Four-port circuit pack	Four-port circuit pack
NT9X63	AA AB	OC-3 interface paddle board	OC-3 interface paddle board

XA-Core circuit packs and packlets

Circuit packs install in the slots in an XA-Core shelf. Packlets install in input/output (IOP) circuit packs.

Table 1-2 lists the circuit packs and packlets of the XA-Core shelf. The table indicates the product engineering code (PEC) of each type of circuit pack and packlet.

Table 1-2 XA-Core circuit packs and packlets (Sheet 1 of 2)

PEC	Version	Name	Description
NTLX02	AA CA DA	Processor element (PE) circuit pack	Processor element (PE) with 256 Mbytes (AA/CA) of SDRAM or 512 Mbytes (DA). The AA version is supported only up to CSP13.
NTLX03	AA AB	Input/output processor (IOP) circuit pack	One-slot IOP. Can house one or two packlets (CMIC, RTIF, AMDI, Ethernet)
NTLX03	BA BB	Input/output processor (IOP) circuit pack	Two-slot IOP for disk and tape

Table 1-2 XA-Core circuit packs and packlets (Continued) (Sheet 2 of 2)

PEC	Version	Name	Description
NTLX04	AA BA CA	High performance input/output processor (HIOP) circuit pack	Occupies one slot. Does not take packlets. NTLX04AA supports ethernet links only. NTLX04BA and NTLX04CA support ethernet links and ATM AMDI links. NTLX04CA cannot co-exist with the AA or BA version.
NTLX05	AA AB	OC-3 two-port interface packlet	Core-MS interconnect (CMIC) interface for XA-Core to message switch (MS) communication. The AA version is supported only up to CSP13.
NTLX05	BA	OC-3 two-port AMDI interface packlet	Core-ATM interconnect
NTLX06	AA AB AC	Disk drive packlet	Disk drive for data storage. NTLX06AA has 4.0 Gbytes; NTLX06AB has 8.0 Gbytes; NTLX06AC has 34.2 Gbytes. The AA version is supported only up to CSP18.
NTLX07	AA BA	Digital audio tape (DAT) tape drive packlet	Supports 60-meter (1.3 GByte) tapes (AA only) or 90-meter (2.0 GByte) tapes (AA and BA) or 120-meter (4.0 GByte) tapes (AA and BA)
NTLX08	AA AB	RS232/ serial interface packlet	Remote terminal interface (RTIF). The AA version has been discontinued.
NTLX09	AA	Ethernet single-port interface packlet	Connection to the LAN hub and the IP network
NTLX12	AA	Shelf interface module (SIM) circuit pack	Power supply/power conditioner
NTLX14	CA	Shared memory (SM) circuit pack	384-MBytes shared memory (SM)
NTLX17	AA	High performance CMIC (HCMIC) circuit pack	Occupies one slot. Does not take packlets. Supports CMIC links and RTIF links. Can also support an ethernet link.
NTLX20	AA	Filler circuit pack	Regulates air flow in the cabinet
NTLX20	BA	Terminating filler circuit pack	Terminating circuit pack for one slot not used in shelf

Visual indicators on circuit pack

Each XA-Core circuit pack and packlet has visual indicators on the faceplate. The visual indicators are light-emitting diodes (LED). These LEDs are indicators of the status of the circuit pack or packlet for removal. All the LEDs

on all circuit packs and packlets of the XA-Core shelf illuminate in response to a MAP level command INDICAT with parameter TESTALL. The parameter TESTALL checks the LEDs for correct illumination. The status indicators are:

- Red LED illuminated indicates you can remove the circuit pack or packlet safely (circuit pack is not in service). The red LED can also wink instead of illuminate. The red LED winks in response to a MAP level command INDICAT CARD issued against a circuit pack or packlet that is in the manual busy (ManBsy) state.
- Green LED illuminated indicates you cannot remove the circuit pack or packlet safely (circuit pack is in service).
- Amber LED illuminated indicates a loss of primary feed or link signal to the circuit pack or packlet. Amber LEDs are found on the SIM circuit pack, the HIOP circuit pack, the HCMIC circuit pack, and the packlets (CMIC, RTIF, AMDI, and ethernet). The amber LED on the SIM circuit pack illuminates to indicate the loss of one or more power feeds to the SIM circuit pack. The amber LED on a packlet illuminates to indicate the loss of one or more link signals. Each HIOP circuit pack and each HCMIC circuit pack has three amber LEDs, one for the ethernet port, one for the two RTIF ports, and one for the two OC-3 ports. Each amber LED illuminates to indicate the loss of a link signal. (The NTLX04AA HIOP CP supports only ethernet links; the NTLX04BA HIOP CP supports ethernet links and ATM AMDI links. The NTLX17AA HCMIC CP supports CMIC links and RTIF links, and can also support an ethernet link.)

Live-inserted circuit pack

Maintenance activities can insert and remove XA-Core circuit packs from a live slot of an XA-Core shelf. The design of a non-contact midplane permits the live insertion and removal of XA-Core circuit packs. A non-contact midplane has electrical connections completed by the effect of electric and magnetic field coupling in the circuit path. An exception to the live insertion and removal of circuit packs is the NTLX12AA shelf interface module (SIM) circuit pack. Remove power from the SIM circuit pack only before the insertion or removal of the SIM circuit pack. To remove power from the SIM circuit pack, turn off all three circuit breakers on the faceplate of the SIM circuit pack. XA-Core also permits the live insertion and removal of packlets.

XA-Core shelf design

Shelf layout

This section describes CP and packlet placement in an XA-Core shelf.

The XA-Core shelf supports a variety of PE configurations ranging from 1+1 to 9+1. However, not all PE configurations are available in all cases. There are restrictions associated with certain products, and restrictions associated with the SuperNodeSE cabinet. For detailed information on the PE configurations,

see the descriptions of the NTLX02CA and NTLX02DA circuit packs in this document, in the chapter titled “XA-Core hardware description overview”.

> ***Note 1:*** In each PE configuration, the spare processing power is the equivalent of one PE unit.
>
> ***Note 2:*** For information on the PE configurations supported in an XA-Core shelf in a SuperNode SE cabinet (NTLX01BA), see “Restrictions for an XA-Core shelf in a SuperNode SE (NTLX01BA) cabinet” on page 1-17.

The XA-Core can contain from five to ten SM circuit packs. For detailed information on the SM configurations, see the description of the NTLX14CA circuit pack in this document, in the chapter titled “XA-Core hardware description overview”.

> ***Note:*** For information on the subsets of SM configurations supported in an XA-Core shelf in a SuperNode SE cabinet (NTLX01BA), see “Restrictions for an XA-Core shelf in a SuperNode SE (NTLX01BA) cabinet” on page 1-17.

Slots 5R, 6R, 13R, and 14R can contain single-width IOP circuit packs.

HIOP circuit packs can be installed in slots 5R and 14R. If NTLX04CA HIOPs are used, then there can be up to four HIOPs in the shelf, the third and fourth installing in slots 6R and 13R. The HIOP circuit packs may support only ethernet links, or may support both ethernet links and AMDI links. If ethernet links are supported by NTLX04 HIOP circuit packs, then ethernet packlets are not used. If ATM AMDI links are supported by NTLX04 HIOP circuit packs, then AMDI packlets are not used. (NTLX04AA HIOP circuit packs support ethernet links only.)

HCMIC circuit packs can be installed in slots 4R and 15R. The HCMIC circuit packs support CMIC links and RTIF links, and can also support ethernet links. If HCMIC circuit packs are equipped, then CMIC packlets and RTIF packlets are not used, and ethernet packlets cannot be installed in the shelf. The HCMIC circuit packs can support ethernet links in the following situations: if there are to be two ethernet links and there are no HIOP circuit packs in the shelf; if there are to be four ethernet links and there are only two HIOP circuit packs in the shelf.

> ***Note:*** For information on IOP, HIOP, and HCMIC circuit packs in an XA-Core shelf in a SuperNode SE cabinet (NTLX01BA), see “Restrictions for an XA-Core shelf in a SuperNode SE (NTLX01BA) cabinet” on page 1-17.

Figure 1-8 shows the shelf layout for an XA-Core shelf that has the 7+1 PE configuration and the 9+1 SM configuration.

Figure 1-8 Example of XA-Core shelf layout

		IOP (Disk/Tape)	18F 17F
16R	SIM	PE	16F
15R	HCMIC CP or IOP (OC-3/RTIF)	Terminating filler	15F
14R	HIOP CP or IOP (AMDI/ETHR)	PE	14F
13R	HIOP CP or IOP (AMDI/ETHR)	PE	13F
12R	PE	PE	12F
11R	SM	SM	11F
10R	SM	SM	10F
09R	SM	SM	09F
08R	SM	SM	08F
07R	SM	SM	07F
06R	HIOP CP or IOP (AMDI/ETHR)	PE	06F
05R	HIOP CP or IOP (AMDI/ETHR)	PE	05F
04R	HCMIC CP or IOP (OC-3/RTIF)	PE	04F
03R	SIM	IOP (Disk/Tape)	03F 02F
		Filler	01F

Rear ⇦ ⇨ Front

Note 1: HIOP circuit packs can support ethernet links only, or both ethernet links and ATM AMDI links. HCMIC circuit packs support CMIC links and RTIF links, and can also support ethernet links. Co-existence rules are as follows. (1) All instances of a given type of link must be supported by the same type of hardware. For example, RTIF links must all be on packlets, or all be on HCMIC CPs. (2) If there are HCMIC CPs in the shelf, then there cannot be ethernet packlets. (3) If there HCMIC CPs in the shelf, and if there are no HIOP CPs or only two HIOP CPs, then the HCMIC CPs can support ethernet links. If there are four HIOP CPs in the shelf, then HCMIC CPs cannot support ethernet links.

Note 2: If IOP circuit packs are installed in slot 5R, 6R, 13R, or 14R. then depending the application, they contain ethernet and/or AMDI packlets.

Restrictions for an XA-Core shelf in a SuperNode SE (NTLX01BA) cabinet

In an XA-Core shelf in a SuperNode SE cabinet (NTLX01BA)

- Supported PE configurations are
  - — up to 3+1 if NTLX02CA PE circuit packs are used
  - — up to 2+1 if NTLX02DA PE circuit packs are used (except as noted below)
- There can be five to seven SM circuit packs (except as noted below).
- The total combined number of IOP, HIOP, and HCMIC circuit packs can be a maximum of six (except as noted below).

Note 1: GSM HLR configurations support up to 7+1 PE configurations (using NTLX02DA PE circuit packs) with up to ten SM circuit packs, and a total combined number of IOP, HIOP, and HCMIC circuit packs to a maximum of four, assuming an 8K maximum ENET and a fully equipped link interface shelf (LIS).

Note 2: GSM HLR or MSC configurations support up to 9+1 PE configurations (using NTLX02DA PE circuit packs) with up to ten SM circuit packs, and a total combined number of IOP, HIOP, and HCMIC circuit packs to a maximum of six, assuming an 8K maximum ENET and no link interface shelf (LIS).

This page is left blank intentionally.

2 XA-Core operational measurements

Introduction

Operating company personnel use the DMS operational measurement (OM) system to obtain information on the performance and use of DMS SuperNode and SuperNode SE system components.

Operational measurements are statistics. The statistics are stored in registers, and the registers are organized into OM groups. Table 2-1 lists the OM groups in the XA-Core system.

The OM registers record events occurring in XA-Core. The registers record event counts and event durations. These statistics help operating company personnel to identify faulty equipment and problem conditions.

Operating company personnel can display OM information at a MAP terminal, or send the OM information to a printer or to a recording device.

Types of OM registers

The following sections describe peg registers, usage registers, and high-watermark registers.

Peg registers

Peg registers contain event counts. Each OM group listed in Table 2-1 contains peg registers.

XA-Core OM peg registers count

- the number of faults against each circuit pack or packlet type
- the number of instances of system initialization
- the number of times a REx test class (SM, PE, IO, BASE, ALL, FULL) fails or a system REx test aborts

Peg registers record fault counts for XA-Core equipment. When a fault is detected on a piece of equipment, the value in the related peg register increments by one. Fault conditions can occur in any of the XA-Core

subsystems, such as shared memory (SM), processor element (PE), or input/output (IO).

Usage registers

Usage registers record event durations. In particular, they record the durations of fault and alarm conditions. The following OM groups listed in Table 2-1 contain usage registers: OM group XACSRVC, OM group XASTAT, and OM group IOCAP.

Usage registers help operating company personnel determine the severity of fault conditions. For example, XA-Core usage registers record the length of time a piece of XA-Core equipment is out-of-service (OOS).

The system uses a scan process to determine the length of time that a condition exists. The scan process samples conditions on the XA-Core every 100 seconds. When the scan detects a particular condition, the related usage register increments. The usage register count continues to increment at each 100 second sampling while the condition exists on the XA-Core.

The value recorded in a usage register is equal to the number of scan intervals completed while the related alarm condition exists. The number of scan intervals multiplied by the scan rate (every 100 seconds) represents the length of time that the condition exists. For example, if a critical or major alarm condition exists for five scan intervals, the value recorded in the related usage register is five. As the scan rate for XA-Core is every 100 seconds, the length of time that the alarm condition exists is 500 seconds.

After operating company personnel clear the critical or major alarm condition, the next scan interval will no longer detect the alarm condition. With the alarm condition cleared, the related usage register will no longer increment.

High-watermark registers

A high-watermark register refers to a value that is observed or calculated repeatedly. The high-watermark register records the maximum value that is observed or calculated during a period of time. The following OM group listed in Table 2-1 contains a high-watermark register: OM group IOCAP.

XA-Core OM groups

Table 2-1 lists the OM groups in the XA-Core system. Subsequent sections of this chapter describe the OM groups in detail.

Table 2-1 OM groups for XA-Core

OM Group	Description
XACORE	Performance information about XA-Core.
XACPOM	CPBASE OMs for XA-Core.
XACSRVC	Fault and alarm information: totals and durations.
XASTAT	Measurements of CPU usage and call processing.
IOCAP	Measurements of messaging rates and sizes for CMIC, ETHR, and AMDI service types on HIOP and HCMIC circuit packs.

This page is left blank intentionally.

OM group XACORE

OM description

The XACORE OM group contains peg that registers record the number of fault conditions on the XA-Core, and usage registers that record the length of time a fault or alarm condition exists on the XA-Core.

Some OM registers are related to specific log reports and alarms. For details, see the table titled "Relations among logs, alarms, and OMs" in the chapter titled “Problem isolation and correction” in the *XA-Core Maintenance Manual*, 297-8991-510.

Release history

Release CSP20 deletes registers XACMIC and XARTIF (replaced by XCMIC and XRTIF, respectively). It also deletes registers XALOCP and XAREMP (replaced by XRTIFPRT). It changes register XAMDI, which now counts critical faults on AMDI packlets, but not on AMDI ports. It adds XCMIC, XCMICPRT, XCMICLNK, XRTIF, XRTIFPRT, XRTIFLNK, and XAMDIPRT.

Release CSP14 introduces peg registers XETHR, XETHRPRT and XETHRLNK. This release also modifies OM group XACORE, moving the following registers to OM group XACSRVC. XAPEMAJU, XAPECRIU, XASSMPXU, XAMSMPXU, XARSMPXU, XASMCRIU, XALKMAJU, XAMDMAJU, XAMDCRIU, XATRAP, XASWINI, XAMWINI, XASCINI, XAMCINI.

Release CSP12.7 introduces peg registers XAMDI and XAMDILNK. This release also introduces usage registers XAMDMAJU and XAMDCRIU.

Release CSP104 introduces OM group XACORE.

Registers

OM group XACORE registers display on the MAP terminal as follows.

```
XAPE        XARXPE      XASM        XARXSM
XAIOP       XARXIO      XADISK      XATAPE
XRTIF       XRTIFPRT    XRTIFLNK    XCMIC
XCMICPRT    XCMICLNK    XARXABRT    XARXBASE
XARXFULL    XARXALL     XAMDI       XAMDIPRT
XAMDILNK    XETHR       XETHRPRT    XETHRLNK
```

OM group XACORE (continued)

Group structure

OM group XACORE provides one tuple per office.

Key field: EXTENDED_ARCHITECTURE_CORE

Info field: None

Associated OM groups

This OM group is associated with OM group XACSRVC.

Associated functional groups

There is an association between OMgroup XACORE and the BASE0001 functional group.

Associated functionality codes

There are no associated functionality codes.

OM group XACORE (continued)

XA-Core peg registers

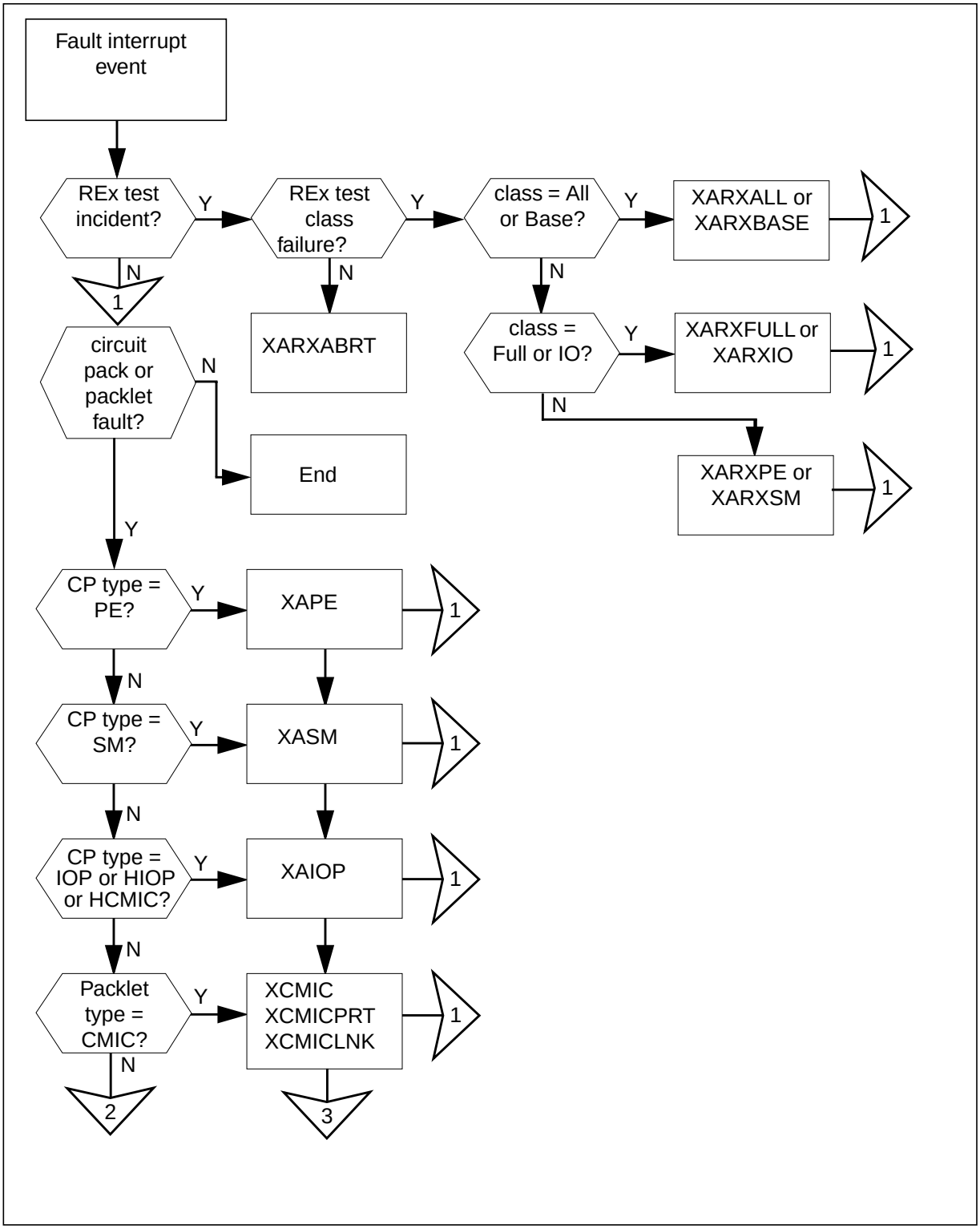

OM group XACORE (continued)

XA-Core peg registers (continued)

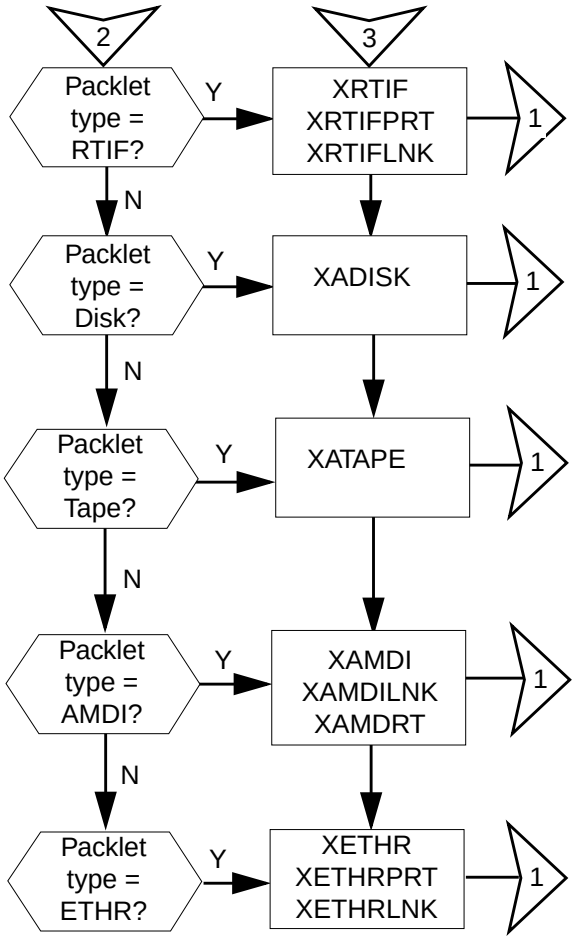

Register XAPE

The XA-Core Processor Element Fault (XAPE) peg register counts the number of processor element (PE) faults detected on the XA-Core.

Register release history

Release CSP104 introduces register XAPE.

Associated registers

Register XARXPE increments when a Routine Exercise (REx) test for PE class fails.

Register XAPECRIU records the length of time a LowPE capacity condition exists on the XA-Core.

Register XAPEMAJU records the length of time a LowPE major condition exists on the XA-Core.

Register XARXFULL increments when the REx test for Full fails.

Register XARXALL increments when the REx All class test fails.

Register XARXBASE increments when the REx Base class test fails.

Associated logs

The system generates the LowPE log report (XAC302) when there is a loss of processor element (PE) redundancy.

The system generates the LowPE Condition Cleared log report (XAC602) when the LowPE condition clears and PE redundancy is restored.

Extension registers

There are no extension registers.

Register XARXPE

The XA-Core Routine Exercise Test Processor Element Failures (XARXPE) peg register counts the number of times that the processor element (PE) Routine Exercise (REx) class test fails.

Register release history

Release CSP104 introduces register XARXPE.

OM group XACORE (continued)

Associated registers

The XAPE register increments when a fault is detected on an XA-Core PE circuit pack (CP).

Associated logs

The system generates the REx Started log report (XAC615) when the REx test begins.

The system generates the REx Report log report (XAC415) when the REx test summary report generates.

The system generates the LowPE log report (XAC302)when there is a loss of processor element (PE) redundancy.

The system generates the LowPE Condition Cleared log report (XAC602)when the LowPE condition clears and processor redundancy is restored.

Extension registers

There are no extension registers.

Register XASM

The XA-Core Shared Memory Fault (XASM) peg register counts the number of critical shared memory faults detected on the XA-Core system.

Register release history

Release CSP104 introduces register XASM.

Associated registers

Register XARXSM increments when the shared memory (SM) REx Class test fails.

Register XASMCRIU record the length of time a LowSM critical alarm condition exists on the XA-Core.

Register XARXFULL increments when the REx Full Class test fails.

Register XARXALL increments when the REx All Class test fails.

Register XARXBASE increments when the REx Base Class test fails.

The XASSMPXU register records the length of time a simplex SM condition exists on the XA-Core as a result of a system action.

Associated logs

The system generates the LowSM log report (XAC300) when there is a loss of shared memory (SM) on the XA-Core.

The system generates the LowSM Condition Cleared log report (XAC600) when the LowSM condition clears and shared memory redundancy is restored.

The system generates the MemLim log report (XAC801) when available allocatable memory is low.

The system generates the MemLim Condition Cleared log report (XAC601) when the low allocatable memory condition clears.

The system generates the REx Report log report (XAC415) when the REx test summary report generates.

Extension registers

There are no extension registers.

Register XARXSM

The XA-Core Routine Exercise Test Shared Memory Failures (XARXSM) peg register counts the number of times the shared memory (SM) routine exercise (REx) class test fails.

Register release history

Release CSP104 introduces register XARXSM.

Associated registers

Register XASM increments when a fault is detected on an XA-Core SM circuit pack (CP).

Register XARSMPXU records the length of time a simplex SM condition exists on the XA-Core system as a result of the REx test.

Associated logs

The system generates the LowSM log report (XAC300)when there is a loss of shared memory on the XA-Core.

The system generates the LowSM Condition Cleared log report (XAC600) when the low SM condition clears.

The system generates the REx Started log report (XAC615) when the REx test begins.

OM group XACORE (continued)

The system generates the REx Report log report (XAC415) when the REx test summary report generates.

The system generates the SMTrbl log report (XAC323) when a SM CP changes state from in-service (InSv) to in-service-trouble (IsTb).

The system generates the SMTrbl Alarm Cleared log report (XAC623) when the SMTrbl condition clears.

Extension registers

There are no extension registers.

Register XAIOP

The XA-Core Input/Output Processor Fault (XAIOP) peg register counts the following things:

- critical input/output processor (IOP) faults detected on the XA-Core
- faults detected on the common equipment of the HIOP circuit packs
- faults detected on the common equipment of the HCMIC circuit packs

Register release history

Release CSP104 introduces register XAIOP.

Associated registers

Register XARXIO increments when the IO REx class test fails.

Register XALKMAJU records the length of time an MScomm major alarm exists on the XA-Core.

Register XARXFULL increments when the REx Full class test fails.

Register XARXALL increments when the REx All class test fails.

Register XARXBASE increments when the REx Base class test fails.

Associated logs

The system generates the MScomm log report (XAC303) when there is a reduction or loss of communication between the XA-Core and the message switch (MS).

The system generates the MScomm Alarm Cleared log report (XAC303) when the MScomm condition clears.

The system generates the TOD log report (XAC304) when there is a loss in Time of Day (TOD) clock redundancy or service.

The system generates the TOD Alarm Cleared log report (XAC604) when the TOD clock condition clears.

The system generates the RTIF log report (XAC305) when there is a loss in RTIF packlet redundancy or service.

The system generates the RTIF Alarm Cleared log report (XAC605) when the RTIF packlet condition clears.

The system generates the Disk log report (XAC306) when there is a loss in service of a Disk packlet.

The system generates the Disk Alarm Cleared log report (XAC606) when the Disk packlet condition clears.

The system generates the Tape log report (XAC307) when there is loss in service of a Tape packlet.

The system generates the Tape Alarm Cleared log report (XAC607) when the Tape packlet condition clears.

The system generates the IOP log report (XAC312) when any one of the following circuit packs goes out-of-service (OOS) because of a critical fault: input/output processor circuit pack (IOP), high performance input/output processor circuit pack (HIOP), or high performance CMIC circuit pack (HCMIC).

The system generates the IOP Fault Cleared log report (XAC612) when an IOP, HIOP, or HCMIC CP fault clears and the CP returns to service (RTS).

Extension registers

There are no Extension registers.

Register XARXIO

The XA-Core Routine Exercise Test Input/Output Class Failure (XARXIO) peg register counts the number of times the REx IO Class test failed. The test can apply to an IOP circuit pack with packlets or to an HIOP circuit pack or to an HCMIC circuit pack.

Register release history

Release CSP104 introduces register XARXIO.

OM group XACORE (continued)

Associated registers

Register XCMIC increments when a CMIC packlet fault is detected on the XA-Core system.

Register XATAPE increments when a Tape packlet fault is detected on the XA-Core system.

Register XADISK increments when a Disk packlet fault is detected on the XA-Core system.

Register XRTIF increments when an Reset Terminal Interface Fault (RTIF) packlet fault is detected on the XA-Core system.

Register XAIOP increments when an input/output processor (IOP) fault is detected on the XA-Core system. It also increments when a fault is detected on the common equipment of either an HIOP circuit pack or an HCMIC circuit pack.

Associated logs

The system generates the Disk log report (XAC306) when there is a loss in service of a Disk packlet.

The system generates the Disk Alarm Cleared log report (XAC606) when the condition that caused the loss in service of a Disk packlet clears.

The system generates the Tape log report (XAC307) when there is a loss in service of a Tape packlet.

The system generates the Tape Alarm Cleared log report (XAC607) when the condition that caused the loss in service of a Tape packlet clears.

The system generates the MScomm log report (XAC303) when there is a loss of communication between the message switch (MS) and the XA-Core.

The system generates the MScomm Alarm Cleared log report (XAC603) when the MScomm condition clears.

The system generates the TOD log report (XAC304) when there is a loss of service of a TOD clock.

The system generates the TOD Alarm Cleared log report (XAC604) when the TOD condition clears.

The system generates the RTIF log report (XAC305) when there is a loss of service of an RTIF packlet.

The system generates the RTIF Alarm Cleared log report (XAC605) when the condition that caused the loss in service of an RTIF packlet clears.

The system generates the REx Report log report (XAC415) when the REx test summary report generates.

Extension registers

There are no extension registers.

Register XADISK

The XA-Core Disk Fault (XADISK) peg register counts the number of disk faults detected on the XA-Core system.

Register release history

Release CSP104 introduces register XADISK.

Associated registers

Register XARXIO increments when the REx IO class test fails.

Register XARXALL increments when the REx All class test fails.

Register XARXFULL increments when the REx Full class test fails.

Register XARXBASE increments when the REx Base class test fails.

Associated logs

The system generates the Disk log report (XAC306) when there is a loss of service of a Disk packlet.

The system generates the Disk Alarm Cleared log report (XAC606) when a Disk packlet returns-to-service (RTS).

Extension registers

There are no Extension registers.

Register XATAPE

The XA-Core Tape Fault (XATAPE) peg register counts the number of critical Tape faults detected on the XA-Core.

Register release history

Release CSP104 introduces register XATAPE.

OM group XACORE (continued)

Associated registers

Register XARXIO increments when the REx IO class test fails.

Register XARXALL increments when the REx All class test fails.

Register XARXFULL increments when the REx Full class test fails.

Register XARXBASE increments when the REx Base class test fails.

Associated logs

The system generates the Tape log report (XAC307) when there is a loss in service of a Tape packlet.

The system generates the Tape Alarm Cleared log report (XAC607) when a Tape packlet returns-to-service (RTS).

Extension registers

There are no extension registers.

Register XRTIF

The XA-Core Reset Terminal Interface Fault (XARTIF) peg register counts the number of RTIF packlet faults detected on the XA-Core system.

Register release history

Release CSP20 introduces register XRTIF, to replace XARTIF.

Associated registers

None.

Extension registers

There are no extension registers.

Associated logs

The system generates the RTIF log report (XAC305) when an RTIF packlet goes out of service.

The system generates the RTIF Alarm Cleared log report (XAC605) when the RTIF fault clears on the packlet.

Register XARTIFPRT

The XA-Core RTIF Port (XRTIFPRT) peg register counts the number of critical faults detected on RTIF ports in the XA-Core. Faults on both local and remote RTIF ports peg this register.

Register release history

Release CSP20 introduces register XARTIFPRT, to replace XALOCP and XAREMP.

Associated registers

None.

Associated logs

The system generates the RTIF log report (XAC305) when an RTIF port goes out of service.

The system generates the RTIF Alarm Cleared log report (XAC605) when the RTIF fault clears on the port.

Register XARTIFLNK

The XA-Core RTIF link (XARTIFLNK) peg register counts the number of critical RTIF link faults detected on the XA-Core. Faults on both local and remote RTIF links peg this register.

Register release history

Release CSP20 introduces register XARTIFLNK.

Associated registers

None.

Associated logs

The system generates the RTIF log report (XAC305) when an RTIF link goes out of service.

The system generates the RTIF Alarm Cleared log report (XAC605) when the RTIF fault clears on the link.

Extension registers

There are no extension registers.

Register XCMIC

The XA-Core CMIC (XCMIC) peg register counts the number of critical CMIC packlet faults detected on the XA-Core.

Register release history

Release CSP20 introduces register XCMIC, to replace XACMIC.

OM group XACORE (continued)

Associated registers

None.

Associated logs

The system generates the MScomm log report (XAC303) when a CMIC packlet goes out of service.

The system generates the MScomm Alarm Cleared log report (XAC603) when the CMIC fault condition clears on the packlet.

The system generates the TOD log report (XAC304) when there is a loss of service of a TOD clock.

The system generates the TOD Alarm Cleared log report (XAC604) when the TOD clock condition clears.

The system generates the MS Link configuration mismatch log report (XAC326) when the CMIC links are misconfigured, that is, when the links connected to the CMIC ports of an XA-Core connect to the wrong CP ports on the MS.

The system generates the MS Link configuration mismatch Cleared log report (XAC626) when the MS Link configuration mismatch alarm condition clears.

Extension registers

There are no extension registers.

Register XCMICPRT

The XA-Core CMIC port (XCMICPRT) peg resister counts the number of critical CMIC port faults detected on the XA-Core.

Register release history

Release CSP20 introduces register XCMICPRT.

Associated registers

None.

Associated logs

The system generates the MScomm log report (XAC303) when a CMIC port goes out of service.

The system generates the MScomm Alarm Cleared log report (XAC603) when the CMIC fault clears on the port.

Register XCMICLNK

The XA-Core CMIC link (XCMICLNK) peg resister counts the number of critical CMIC port faults detected on the XA-Core.

Register release history

Release CSP20 introduces register XCMICLNK.

Associated registers

None.

Associated logs

The system generates the MScomm log report (XAC303) when a CMIC link goes out of service.

The system generates the MScomm Alarm Cleared log report (XAC603) when the CMIC fault clears on the link.

Register XARXABRT

The XA-Core Routine Exercise Test Faults (XARXABRT) peg register counts the number of times the system Routine Exercise (REx) test aborts.

Register release history

Release CSP104 introduces register XARXABRT.

Associated registers

There are no associated registers.

Associated logs

The system generates the REx Started log report (XAC615) when the REx test begins.

The system generates the REx Report log report (XAC415) when the REx test summary report generates.

The system generates the RExSch log report (XAC413) when the REx test is cancelled more than twice.

The system generates the RExSch Alarm Cleared log report (XAC613) when the RExSch condition clears.

Extension registers

There are no extension registers.

OM group XACORE (continued)

Register XARXBASE

The XA-Core Routine Exercise Base Class Test Failures (XARXBASE) peg register counts the number of times the REx Base hardware class test fails. The REx Base hardware class test includes in-service tests on all XA-Core hardware components and an image test.

Register release history

Release CSP104 introduces register XARXBASE.

Associated registers

If REx Base detects a fault on a circuit (CP) or packlet, the peg register related to the CP or packlet fault increments:

Register XAPE increments when REx All detects a fault on a processor element (PE) CP.

Register XAIOP increments when REx All detects a fault on an IOP CP, or in the common equipment of an HIOP CP, or in the common equipment of an HCMIC CP.

Register XASM increments when REx All detects a fault on a shared memory (SM) CP.

Register XCMIC increments when REx All detects a fault on a CMIC packlet.

Register XRTIF increments when REx All detects a fault on the RTIF packlet.

Register XATAPE increments when REx All detects a fault on a Tape packlet.

Register XADISK increments when REx All detects a fault on a Disk packlet.

Associated logs

The system generates the REx Started log report (XAC615) when a REx test begins.

The system generates the REx Report (XAC415) log when the REx test summary report generates.

The system generates the RExSch log report (XAC413) when the REx test is cancelled more than twice.

The system generates the LowPE log report (XAC302) when there is a loss of processor element (PE) redundancy.

OM group XACORE (continued)

The system generates the LowPE Condition Cleared log report (XAC602) when the LowPE condition clears and processor element redundancy is restored.

The system generates the PETrbl log report (XAC322) when a non-critical fault causes a PE CP to change state from InSv to IsTb.

The system generates the PETrbl cleared log report (XAC622) when the PETrbl condition clears.

The system generates the LowSM log report (XAC300) when there is a loss of shared memory (SM) on the XA-Core.

The system generates the LowSM Condition Cleared log report (XAC600) when the low SM condition clears.

The system generates the SMTrbl log report (XAC323) when a non-critical fault causes the SM CP to state from InSv to IsTb.

The system generates the SMTrbl Alarm Cleared log report (XAC623) when the SMTrbl condition clears.

The system generates the IOP log report (XAC312) when any one of the following circuit packs goes out-of-service (OOS) because of a critical fault: input/output processor circuit pack (IOP), high performance input/output processor circuit pack (HIOP), or high performance CMIC circuit pack (HCMIC).

The system generates the IOP Fault Cleared log report (XAC612) when an IOP, HIOP, or HCMIC CP fault clears and

The system generates the IOTrbl log report (XAC324) when a non-critical fault condition causes an HCMIC CP, IOP CP, packlet, CMIC link, port, or TOD clock to change state from InSv to IsTb.

The system generates the IOTrbl Cleared log report (XAC624) when a non-critical fault condition on an HCMIC CP, IOP CP, packlet, CMIC link, port, or TOD clock clears.

The system generates the MScomm log report (XAC303) when there is a reduction or loss of communication between the XA-Core and the MS.

The system generates the MScomm Alarm Cleared log report (XAC603) when the MScomm condition clears.

OM group XACORE (continued)

The system generates the Tape log report (XAC307) when there is a loss of service of a Tape packlet.

The system generates the Tape Alarm Cleared log report (XAC607) when the Tape packlet condition clears.

The system generates the Disk log report (XAC306) when there is a loss of service of a Disk packlet.

The system generates the Disk Alarm Cleared log report (XAC606) when the Disk packlet condition clears.

The system generates the RTIF log report (XAC305) when there is a loss of service of an RTIF packlet.

The system generates the RTIF Alarm Cleared log report (XAC605) when the RTIF packlet condition clears.

The system generates the TOD log report (XAC304) when there is a loss of service of a Time of Day (TOD) clock.

The system generates the TOD Alarm Cleared log report (XAC604) when the TOD clock condition clears.

The system generates the Image Test Report log report (XAC308) when an image test is performed on the XA-Core system.

Extension registers

There are no extension registers

Register XARXFULL

The XA-Core Routine Exercise Full Class Test Failures (XARXFULL) peg register counts the number of times the REx Full class test fails. The XARXFULL test class includes the following tests:

• in-service tests on all XA-Core hardware components

• out-of-service tests on one processor element (PE) circuit pack (CP), one shared memory (SM) CP, one input/output processor (IOP) CP with related packlets, and an image test.

Register release history

Release CSP104 introduces register XARXFULL.

OM group XACORE (continued)

Associated registers

If REx Full detects a fault on a CP or packlet, the peg register related to that fault increments:

Register XAPE increments when REx Full detects a fault on a processor element (PE) CP.

Register XAIOP increments when REx Full detects a fault on an IOP CP, or in the common equipment of an HIOP CP, or in the common equipment of an HCMIC CP.

Register XASM increments when REx Full detects a fault on a shared memory (SM) CP.

Register XCMIC increments when REx Full detects a fault on a CMIC packlet.

Register XATAPE increments when REx Full detects a fault on a Tape packlet.

Register XADISK increments when REx Full detects a fault on a Disk packlet.

Register XRTIF increments when REx Full detects a fault on an RTIF packlet.

Associated logs

The system generates the REx Started log report (XAC615) when a REx test begins.

The system generates the REx Report log report (XAC415) when the REx test summary report generates.

The system generates the RExSch log report (XAC413) when the REx test is cancelled more than twice.

The system generates the LowPE log report (XAC302) when there is a loss of processor element (PE) redundancy.

The system generates the LowPE Condition Cleared log report (XAC602) when the LowPE condition clears and processor element redundancy is restored.

The system generates the PETrbl log report (XAC322) when a non-critical fault causes a PE CP to change state from InSv to IsTb.

The system generates the LowSM log report (XAC300) when there is a loss of shared memory (SM) on the XA-Core.

OM group XACORE (continued)

The system generates the LowSM Condition Cleared log report (XAC600) when the low SM condition clears.

The system generates the SMTrbl log report (XAC323) when a non-critical fault causes the SM CP to state from InSv to IsTb.

The system generates the SMTrbl Alarm Cleared log report (XAC623) when the SMTrbl condition clears.

The system generates the IOTrbl log report (XAC324) when a non-critical fault condition causes an HCMIC CP, IOP CP, packlet, CMIC link, port, or TOD clock to change state from InSv to IsTb.

The system generates the IOTrbl Cleared log report (XAC624) when a non-critical fault condition on an HCMIC CP, IOP CP, packlet, CMIC link, port, or TOD clock clears.

The system generates the IOP log report (XAC312) when any one of the following circuit packs goes out-of-service (OOS) because of a critical fault: input/output processor circuit pack (IOP), high performance input/output processor circuit pack (HIOP), or high performance CMIC circuit pack (HCMIC).

The system generates the IOP Fault Cleared log report (XAC612) when an IOP, HIOP, or HCMIC CP fault clears and the CP returns to service (RTS).

The system generates the MScomm log report (XAC303) when there is a reduction or loss of communication between the XA-Core and the MS.

The system generates the MScomm Alarm Cleared (XAC603) log when the MScomm condition clears.

The system generates the Tape log report (XAC307) when there is a loss of service of a Tape packlet.

The system generates the Tape Alarm Cleared log report (XAC607) when the Tape packlet condition clears.

The system generates the Disk log report (XAC306) when there is a loss of service of a Disk packlet.

The system generates the Disk Alarm Cleared log report (XAC606) when the Disk packlet condition clears.

The system generates the RTIF log report (XAC305) when there is a loss of service of an RTIF packlet.

The system generates the RTIF Alarm Cleared log report (XAC605) when the RTIF packlet condition clears.

The system generates the TOD log report (XAC304) when there is a loss of service of a Time of Day (TOD) clock.

The system generates the TOD Alarm Cleared log report (XAC604) when the TOD clock condition clears.

The system generates the Image Test Report log report (XAC308) when an image test is performed on the XA-Core system.

Extension registers

There are no extension registers.

Register XARXALL

The XA-Core Routine Exercise All Class Test Failures (XARXALL) peg register counts the number of times the REx ALL class test failed.

The REx All Class test includes the following tests:

• in-service tests on all XA-Core hardware.

• out-of-service tests on one Processor element (PE) circuit pack (CP), one shared memory (SM) CP, and one input/output processor (IOP) CP with related packlets.

Register release history

Release CSP104 introduces register XARXALL.

Associated registers

If REx All detects a fault on a CP or packlet, the peg register related to that fault increments:

Register XAPE increments when REx All detects a fault on a processor element (PE) CP.

Register XAIOP increments when REx All detects a fault on an IOP CP, or in the common equipment of an HIOP CP, or in the common equipment of an HCMIC CP.

OM group XACORE (continued)

Register XASM increments when REx All detects a fault on a SM CP.

Register XCMIC increments when REx All detects a fault on a CMIC packlet.

Register XATAPE increments when REx All detects a fault on a Tape packlet.

Register XADISK increments when REx All detects a fault on a Disk packlet.

Register XRTIF increments when REx All detects a fault on an RTIF packlet.

Associated logs

The system generates the REx Started log report (XAC615) when a REx test begins.

The system generates the REx Report log report (XAC415) when the REx test summary report generates.

The system generates the RExSch log report (XAC413) when the REx test is cancelled more than twice.

The system generates the LowPE log report (XAC302) when there is a loss of processor element (PE) redundancy.

The system generates the LowPE Condition Cleared log report (XAC602) when the LowPE condition clears and processor element redundancy is restored.

The system generates the PETrbl log report (XAC322) when a non-critical fault causes a PE CP to change state from InSv to IsTb.

The system generates the LowSM log report (XAC300) when there is a loss of shared memory (SM) on the XA-Core.

The system generates the LowSM Condition Cleared log report (XAC600) when the low SM condition clears.

The system generates the SMTrbl log report (XAC323) when a non-critical fault causes the SM CP to state from InSv to IsTb.

The system generates the SMTrbl Alarm Cleared log report (XAC623) when the SMTrbl condition clears.

The system generates the IOTrbl log report (XAC324) when a non-critical fault condition causes an HCMIC CP, IOP CP, packlet, CMIC link, port, or TOD clock to change state from InSv to IsTb.

OM group XACORE (continued)

The system generates the IOTrbl Cleared log report (XAC624) when a non-critical fault condition on an HCMIC CP, IOP CP, packlet, CMIC link, port, or TOD clock clears.

The system generates the IOP log report (XAC312) when any one of the following circuit packs goes out-of-service (OOS) because of a critical fault: input/output processor circuit pack (IOP), high performance input/output processor circuit pack (HIOP), or high performance CMIC circuit pack (HCMIC).

The system generates the IOP Fault Cleared log report (XAC612) when an IOP, HIOP, or HCMIC CP fault clears and the CP returns to service (RTS).

The system generates the MScomm log report (XAC303) when there is a reduction or loss of communication between the XA-Core and the MS.

The system generates the MScomm Alarm Cleared log report (XAC603) when the MScomm condition clears.

The system generates the Tape log report (XAC307) when there is a loss of service of a Tape packlet.

The system generates the Tape Alarm Cleared log report (XAC607) when the Tape packlet condition clears.

The system generates the Disk log report (XAC306) when there is a loss of service of a Disk packlet.

The system generates the Disk Alarm Cleared log report (XAC606) when the Disk packlet condition clears.

The system generates the RTIF log report (XAC305) when there is a loss of service of an RTIF packlet.

The system generates the RTIF Alarm Cleared log report (XAC605) when the RTIF packlet condition clears.

The system generates the TOD log report (XAC304) when there is a loss of service of a Time of Day (TOD) clock.

The system generates the TOD Alarm Cleared log report (XAC604) when the TOD clock condition clears.

Extension registers

There are no extension registers.

OM group XACORE (continued)

Register XAMDI

The XA-Core ATM multinode data interface link (XAMDI) peg register counts the number of critical AMDI packlet faults detected on the XA-Core.

Register release history

Release CSP20 modifies this register. AMDI packlet faults peg the register, but AMDI port faults do not. AMDI port faults peg register XAMDIPRT.

Release CSP12.7 introduces register XAMDI.

Associated registers

Register XAMDCRIU records the length of time an AMDI critical condition exists on the XA-Core.

Register XAMDMAJU records the length of time an AMDI major condition exists on the XA-Core.

Associated logs

The system generates the AMDI log report (XAC309) when an AMDI packlet or link goes out of service.

The system generates the AMDI condition cleared log report (XAC609) when the AMDI fault clears and the packlet or link returns to service.

Extension registers

There are no extension registers.

Register XAMDIPRT

The XA-Core AMDI port (XAMDIPRT) peg resister counts the number of critical AMDI port faults detected on the XA-Core.

Register release history

Release CSP20 introduces register XAMDIPRT.

Associated registers

None.

Associated logs

The system generates the AMDI log report (XAC309) when an AMDI port goes out of service.

The system generates the AMDI Link Condition Cleared log report (XAC609) when the AMDI fault clears on the port.

Register XAMDILNK

The XA-Core ATM multinode data interface link (XAMDILNK) peg register counts the number of critical AMDI link faults detected on the XA-Core.

Register release history

Release CSP12.7 introduces register XAMDILNK.

Associated registers

Register XAMDCRIU records the length of time an AMDI critical condition exists on the XA-Core.

Register XAMDMAJU records the length of time an AMDI major condition exists on the XA-Core.

Associated logs

The system generates the AMDI log report (XAC309) when an AMDI packlet or link goes out of service.

The system generates the AMDI condition cleared log report (XAC609) when the AMDI fault clears and the packlet or link returns to service.

Extension registers

There are no extension registers.

Register XETHR

The XA-Core Ethernet (XETHR) peg register counts the number of critical ethernet packlet faults detected on the XA-Core.

Register release history

Release CSP14 introduces register XETHR.

Associated registers

Register XETHRMJU records the length of time an ETHR major condition exists on the XA-Core.

Register XETHRCRU records the length of time an ETHR critical condition exists on the XA-Core.

Associated logs

The system generates the Ethernet log report (XAC329) when an ethernet packlet, port or link goes out of service.

OM group XACORE (continued)

The system generates the Ethernet condition cleared log report (XAC629) when the ethernet fault clears and the packlet, port or link returns to service.

Extension registers

There are no extension registers.

Register XETHRPRT

The XA-Core Ethernet (XETHRPRT) peg register counts the number of critical ethernet port faults detected on the XA-Core.

Register release history

Release CSP14 introduces register XETHRPRT.

Associated registers

Register XETHRMJU records the length of time an ETHR major condition exists on the XA-Core.

Register XETHRCRU records the length of time an ETHR critical condition exists on the XA-Core.

Associated logs

The system generates the Ethernet log report (XAC329) when an ethernet packlet, port or link goes out of service.

The system generates the Ethernet condition cleared log report (XAC629) when the ethernet fault clears and the packlet, port or link returns to service.

Extension registers

There are no extension registers.

Register XETHRLNK

The XA-Core Ethernet (XETHRLNK) peg register counts the number of critical ethernet link faults detected on the XA-Core.

Register release history

Release CSP14 introduces register XETHR.

Associated registers

Register XETHRMJU records the length of time an ETHR major condition exists on the XA-Core.

Register XETHRCRU records the length of time an ETHR critical condition exists on the XA-Core.

OM group XACORE (end)

Associated logs

The system generates the Ethernet log report (XAC329) when an ethernet packlet, port or link goes out of service.

The system generates the Ethernet condition cleared log report (XAC629) when the ethernet fault clears and the packlet, port or link returns to service.

Extension registers

There are no extension registers.

This page is left blank intentionally.

OM group XACPOM

OM description

OM group XA-Core CallP Operational Measurement (XACPOM) includes the CPBASE OMs for XA-Core.

The XACPOM OM group contains 6 OM peg registers.

Some OM registers are related to specific log reports and alarms. For details, see the table titled "Relations among logs, alarms, and OMs" in the chapter titled “Problem isolation and correction” in the *XA-Core Maintenance Manual*, 297-8991-510.

Release history

TL10.4 introduced OM group XACPOM.

Registers

OM group XACPOM registers display on the MAP terminal as follows:

```
INFO (XACPOMINFOX)
        ENCAPSZ   ENCAPSZ2  ENCPOVFL    CPOVFL
         ENMSSZ  ENMSOVFL
0     0     xx     yyy     zzzz
                0              0              0              0
                0              0
```

The following table describes the initial values displayed on the MAP terminal.

Description of initial values of OM group XACPOM

Initial values	Description
xx	number of call processes
yyy	number of encapsulators
zzzz	number of encapsulator message buffers

Group structure

OM group XACPOM provides one tuple for each office.

OM group XACPOM (continued)

Key field:
There is no key field.

Info field:
XACPOMINFOX consists of the following three parts:

- OM registers
- Info field of intial values xx, yyy and zzzz
- OM registers count

Related OM groups

There are no related OM groups.

Related functional groups

There are no related functionality groups.

Related functionality codes

There are no related functionality codes.

OM group XACPOM (continued)

OM group XACPOM registers

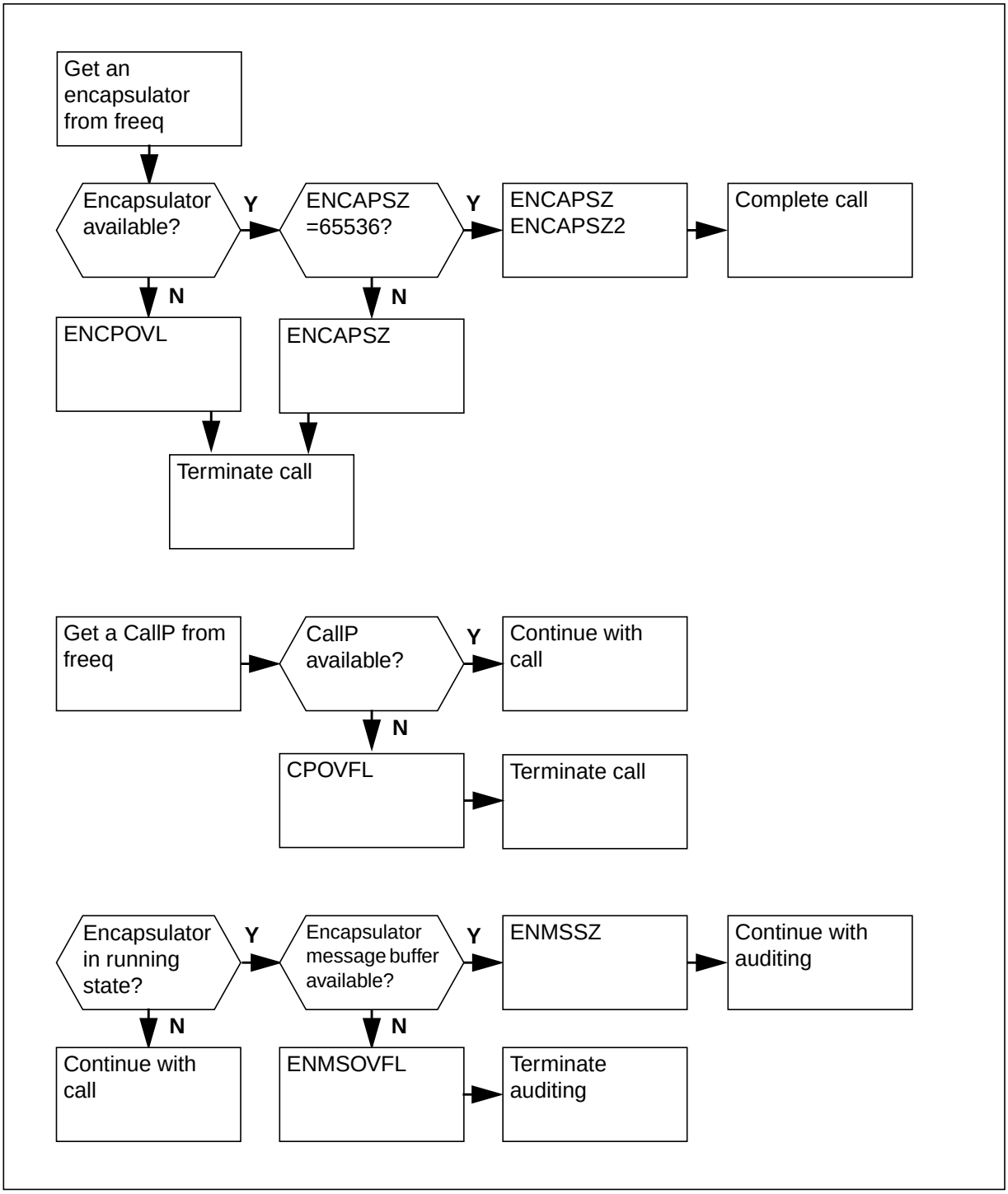

Note: Free queue (freeq) is a queue of free call encapsulators.

OM group XACPOM (continued)

Register ENCAPSZ

Register ENCAPSZ keeps record of how many encapsulators have been requested and retrieved.

Register ENCAPSZ release history

TL10.4 introduced register ENCAPSZ.

Related registers

Register ENCAPSZ2 keeps the record of how many times register ENCAPSZ has wrapped around maximum value of 65536.

Register ENCPOVLF keeps record of number of encapsulators that were requested but were not available.

Related logs

There are no related logs.

Extension registers

There are no extension registers.

Register ENCAPSZ2

Register ENCAPSZ2 keeps the record of how many times register ENCAPSZ has wrapped around maximum value of 65536.

Register ENCAPSZ2 release history

TL10.4 introduced register ENCAPSZ2.

Related registers

Register ENCAPSZ keeps record of how many encapsulators have been requested and retrieved.

Related logs

There are no related logs.

Extension registers

There are no extension registers.

Register ENCPOVFL

Register ENCPOVFL keeps record of number of encapsulators that were requested but were not available.

Register ENCPOVFL release history

TL10.4 introduced register ENCPOVFL

Related registers

Register ENCAPSZ keeps record of how many encapsulators have been requested and retrieved.

Related logs

There are no related logs.

Extension registers

There are no extension registers.

Register CPOVFL

Register CPOVFL keeps record of number of CallPs that were requested but were not available.

Register CPOVFL release history

TL10.4 introduced register CPOVFL

Related registers

There are no related registers.

Related logs

There are no related logs.

Extension registers

There are no extension registers.

Register ENMSSZ

Register ENMSSZ keeps record of how many encapsulators message buffers have been requested and retrieved.

Register ENMSSZ release history

TL10.4 introduced register ENMSSZ.

Related registers

Register ENMSOVFL keeps record of number of encapsulator message buffers that were requested but were not available.

Related logs

There are no related logs.

Extension registers

There are no extension registers.

OM group XACPOM (end)

Register ENMSOVFL

Register ENMSOVFL keeps record of number of encapsulator message buffers that were requested but were not available.

Register ENMSSZ release history

TL10.4 introduced register ENMSOVFL.

Related registers

Register ENMSSZ keeps record of how many encapsulators message buffers have been requested and retrieved.

Related logs

There are no related logs.

Extension registers

There are no extension registers.

OM group XACSRVC

OM description

The XACSRVC OM group contains 11 OM usage registers and 5 OM peg registers.

XA-Core peg registers record the number of fault conditions on the XA-Core. XA-Core usage registers record the length of time a fault or alarm condition exists on the XA-Core.

Some OM registers are related to specific log reports and alarms. For details, see the table titled "Relations among logs, alarms, and OMs" in the chapter titled “Problem isolation and correction” in the *XA-Core Maintenance Manual*, 297-8991-510.

Release history

Release CSP14 introduces OM group XACSRVC and registers, XETHRMJU and XETHRCRU. This release also modifies OM group XACORE, moving the following registers to OM group XACSRVC. XAPEMAJU, XAPECRIU, XASSMPXU, XAMSMPXU, XARSMPXU, XASMCRIU, XALKMAJU, XAMDMAJU, XAMDCRIU, XATRAP, XASWINI, XAMWINI, XASCINI, XAMCINI.

Registers

OM group XACSRVC registers display on the MAP terminal as follows.

```
XAPEMAJU    XAPECRIU    XASSMPXU    XAMSMPXU
XARSMPXU    XASMCRIU    XALKMAJU    XAMDMAJU
XAMDCRIU    XETHRMJU    XETHRCRU    XATRAP
XASWINI     XAMWINI     XASCINI     XAMCINI
```

Group structure

OM group XACSRVC provides one tuple per office.

Key field: EXTENDED_ARCHITECTURE_CORE

Info field: None

Associated OM groups

This OM group is associated with OM group XACORE.

OM group XACSRVC (continued)

Associated functional groups

There is an association between OMgroup XACSRVC and the BASE0001 functional group.

Associated functionality codes

There are no associated functionality codes.

OM group XACSRVC (continued)

XA-Core usage registers

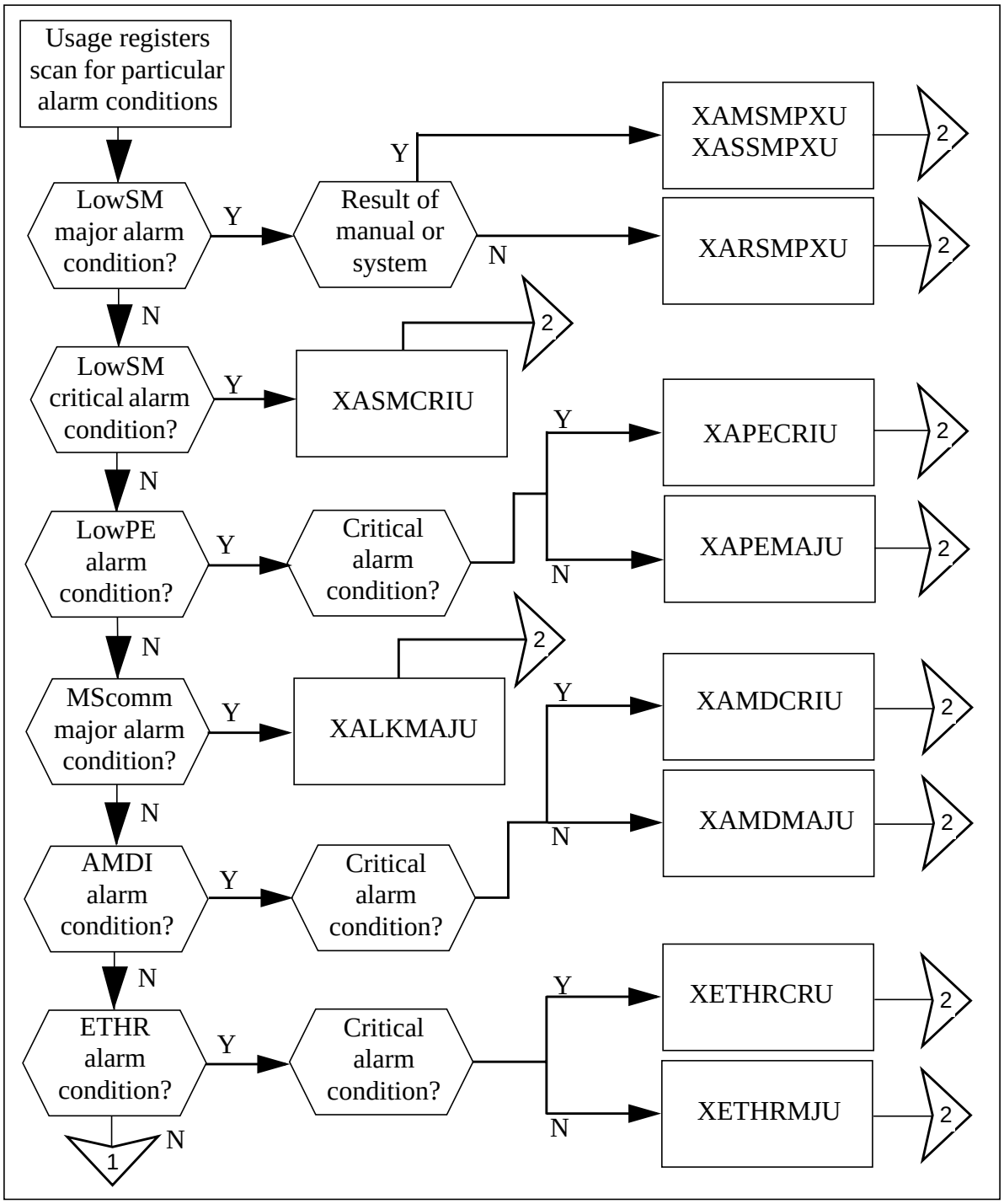

OM group XACSRVC (continued)

XA-Core peg registers

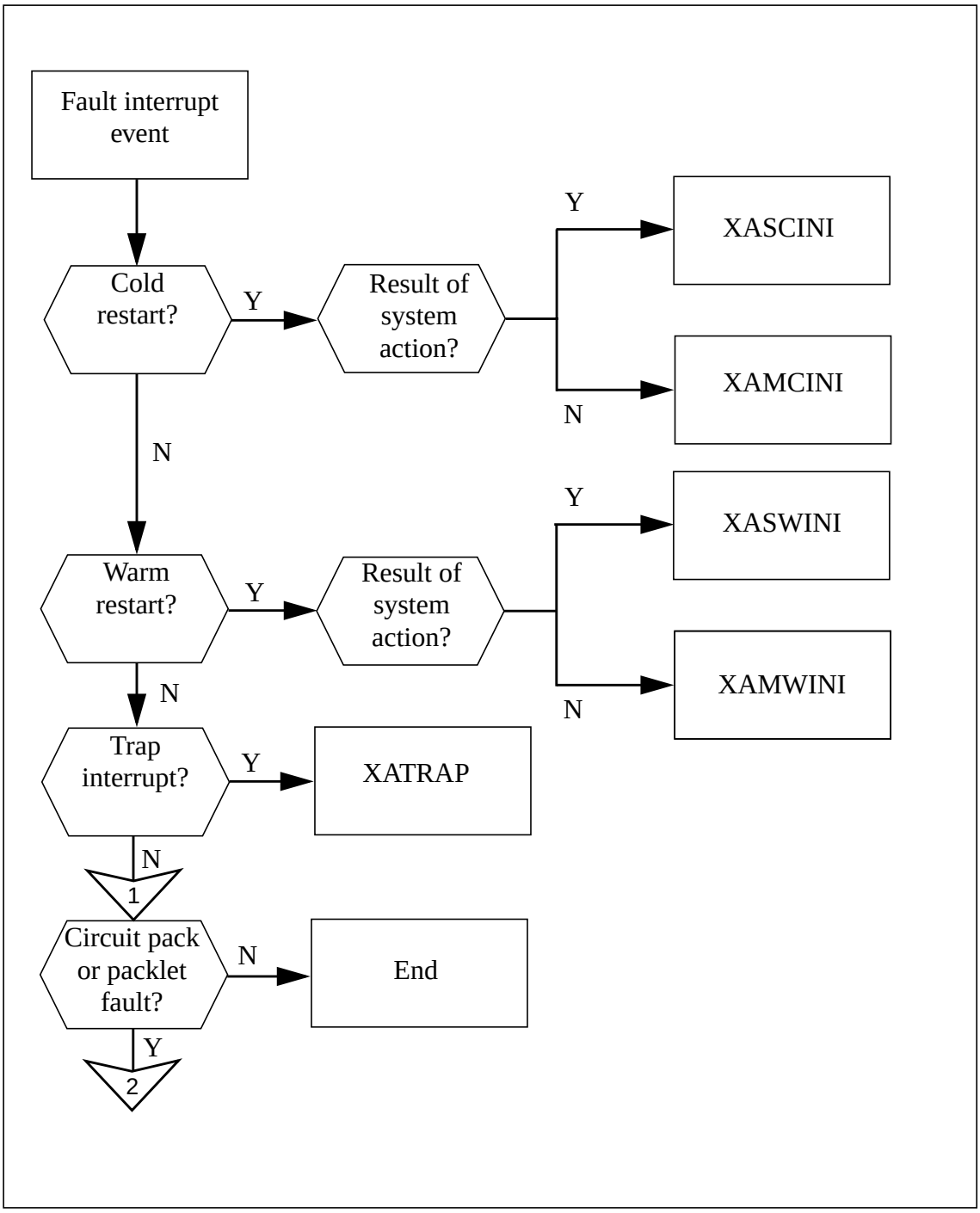

OM group XACSRVC (continued)

XA-Core peg registers (continued)

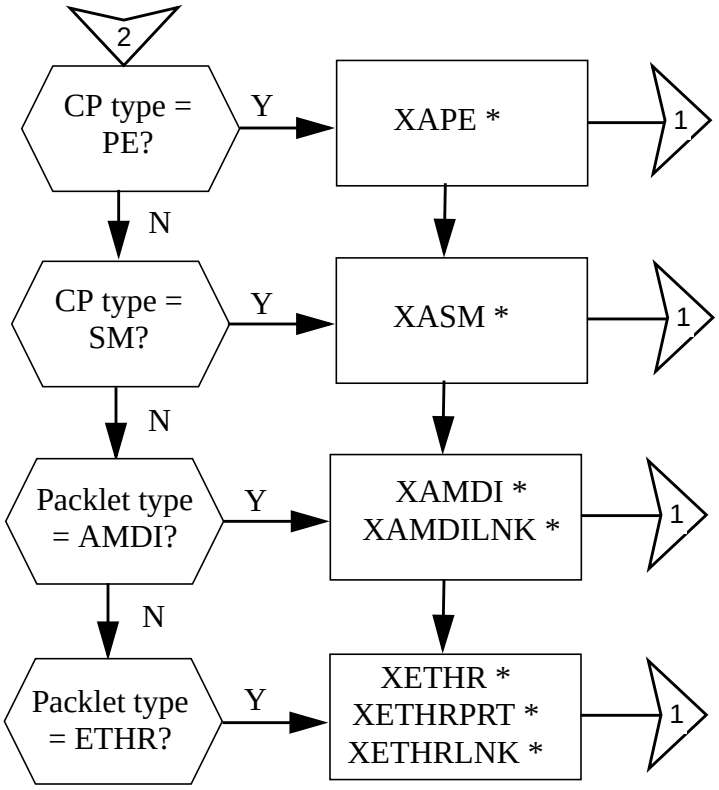

* Registers part of OM group XACORE

OM group XACSRVC (continued)

Register XAPEMAJU

The XA-Core LowPE Major Usage (XAPEMAJU) register records the length of time (in 100 second increments) that a LowPE major alarm condition exists on the XA-Core.

During the LowPE major alarm condition, the XA-Core operates with reduced processor elements (PE).

Register XAPEMAJU release history

Release CSP104 introduces register XAPEMAJU.

Associated registers

Register XAPE increments when a fault is detected on an XA-Core PE circuit pack (CP).

Register XARXPE increments when the PE REx class test fails.

Associated logs

The system generates the LowPE log report (XAC302) when there is a loss of processor element (PE) redundancy.

The system generates the LowPE Condition Cleared log report (XAC602) when the LowPE condition clears and PE redundancy is restored.

Extension registers

There are no extension registers.

Register XAPECRIU

The XA-Core LowPE Critical Usage (XAPECRIU) register records the length of time that a LowPE critical alarm condition exists on the XA-Core. The LowPE critical alarm condition only occurs when applications need more than one processor (PE) circuit pack (CP) to meet capacity requirements.

Register XAPECRIU release history

Release CSP104 introduces register XAPECRIU.

Associated registers

Register XAPE increments when a fault is detected on an XA-Core PE circuit pack (CP).

Register XARXPE increments when the PE REx class test fails.

Associated logs

The system generates the LowPE log report (XAC302) when there is a loss of PE redundancy.

The system generates the LowPE Condition Cleared log report (XAC602) when the LowPE condition clears and PE redundancy is restored.

Extension registers

There are no extension registers.

Register XASSMPXU

The XA-Core System Simplex Usage (XASSMPXU) register records the length of time a simplex shared memory condition exists on the XA-Core as a result of a system action.

Register XASSMPXU release history

Release CSP104 introduces register XASSMPXU.

Associated registers

Register XASM increments when a fault is detected on a shared memory (SM) circuit pack (CP).

Register XARXSM increments when the SM REx class test fails.

Associated logs

The system generates the REx Started log report (XAC615) when the REx test begins.

The system generates the REx Report log report (XAC415) when the REx test summary report generates.

The system generates the LowSM log report (XAC300) when there is a loss of shared memory on the XA-Core.

The system generates the LowSM Condition Cleared log report (XAC600) when the LowSM condition clears.

The system generates the MemLim log report (XAC801) when available allocatable memory is low.

The system generates the MemLim Condition Cleared log report (XAC601) when the low allocatable memory condition clears.

OM group XACSRVC (continued)

Extension registers

There are no extension registers.

Register XAMSMPXU

The XA-Core Manual Simplex Usage (XAMSMPXU) register records the length of time a simplex shared memory (SM) condition exists on the XA-Core as a result of a manual action.

Register XAMSMPXU release history

Release CSP104 introduces register XAMSMPXU.

Associated registers

There are no associated registers.

Associated logs

The system generates the LowSM log report (XAC300) when there is a loss of shared memory on the XA-Core.

The system generates the LowSM Condition Cleared log report (XAC600) when the low SM condition clears.

The system generates the MemLim log report (XAC801) when available allocatable memory is low.

The system generates the MemLim Condition Cleared log report (XAC601) when the low allocatable memory condition clears.

Extension registers

There are no extension registers.

Register XARSMPXU

The XA-Core Routine Exercise Test Simplex Usage (XARSMPXU) register records the length of time that a simplex shared memory condition exists on the XA-Core as a result of the REx test.

Register XARSMPXU release history

Release CSP104 introduces register XARSMPXU.

Associated registers

There are no associated registers.

Associated logs

The system generates the LowSM log report (XAC300) when there is a loss of shared memory on the XA-Core system.

The system generates the LowSM Condition Cleared log report (XAC600) when the LowSM condition clears.

The system generates the REx Started log report (XAC615) when the REx test begins.

Extension registers

There are no extension registers.

Register XASMCRIU

The XA-Core LowSM Critical Usage (XASMCRIU) register records the length of time a low shared memory critical alarm condition exists on the XA-Core.

Register XASMCRIU release history

Release CSP104 introduces register XASMCRIU.

Associated registers

There are no associated registers.

Associated logs

The system generates the LowSM log report (XAC300) when there is a loss of shared memory (SM) on the XA-Core.

The system generates the LowSM Condition Cleared log report (XAC600) when the LowSM condition clears.

The system generates the MemLim log report (XAC801) when available allocatable memory is low.

The system generates the MemLim Condition Cleared log report (XAC601) when the low allocatable memory condition clears.

Extension registers

There are no extension registers.

OM group XACSRVC (continued)

Register XALKMAJU

The XA-Core Link Major Usage (XALKMAJU) register records the length of time a MScomm (message switch communication) major alarm condition exists on the XA-Core.

Register XALKMAJU release history

Release CSP104 introduces register XALKMAJU.

Associated registers

Register XACMIC increments when a critical fault is detected on a CMIC packlet.

Register XAIOP increments when a critical fault is detected on an input/output processor (IOP) circuit pack (CP).

Associated logs

The system generates the MScomm log report (XAC303) when there is a reduction or loss of communication between the XA-Core and the Message Switch (MS).

The system generates the MScomm Alarm Cleared log report (XAC603) when the MScomm condition clears.

The system generates the IOP log report (XAC312) when there is a loss of service of an IOP CP.

The system generates the IOP Cleared log report (XAC612) when the IOP condition clears.

Register XAMDMAJU

The XA-Core ATM multinode data interface major usage (XAMDMAJU) register records the length of time (in 100 second increments) that an AMDI major alarm condition exists on the XA-Core.

Register XAMDMAJU release history

Release CSP12.7 introduces register XAMDMAJU.

Associated registers

Register XAMDI increments when a fault is detected on an AMDI packlet.

Register XAMDILNK increments when a fault is detected on an AMDI link.

Associated logs

The system generates the AMDI log report (XAC309) when an AMDI packlet or link goes out of service.

The system generates the AMDI condition cleared log report (XAC609) when the AMDI fault clears and the packlet or link returns to service.

Extension registers

There are no extension registers.

Register XAMDCRIU

The XA-Core ATM multinode data interface critical usage (XAMDCRIU) register records the length of time (in 100 second increments) that an AMDI critical alarm condition exists on the XA-Core.

Register XAMDCRIU release history

Release CSP12.7 introduces register XAMDCRIU.

Associated registers

Register XAMDI increments when a fault is detected on an AMDI packlet.

Register XAMDILNK increments when a fault is detected on an AMDI link.

Associated logs

The system generates the AMDI log report (XAC309) when an AMDI packlet or link goes out of service.

The system generates the AMDI condition cleared log report (XAC609) when the AMDI fault clears and the packlet or link returns to service.

Extension registers

There are no extension registers.

Register XETHRMJU

The XA-Core Ethernet major usage (XETHRMJU) register records the length of time (in 100 second increments) that an ETHR major alarm condition exists on the XA-Core.

Register XETHRMJU release history

Release CSP14 introduces register XETHRMJU.

Associated registers

Register XETHR increments when a fault is detected on an ethernet packlet.

OM group XACSRVC (continued)

Register XETHRLNK increments when a fault is detected on an ethernet link.

Register XETHRPRT increments when a fault is detected on an ethernet port.

Associated logs

The system generates the Ethernet log report (XAC329) when an ethernet packlet, port or link goes out of service.

The system generates the Ethernet condition cleared log report (XAC629) when the ethernet fault clears and the packlet, port or link returns to service.

Extension registers

There are no extension registers.

Register XETHRCRU

The XA-Core Ethernet critical usage (XETHRCRU) register records the length of time (in 100 second increments) that an ETHR critical alarm condition exists on the XA-Core.

Register XETHRCRU release history

Release CSP14 introduces register XETHRCRU.

Associated registers

Register XETHR increments when a fault is detected on an ethernet packlet.

Register XETHRLNK increments when a fault is detected on an ethernet link.

Register XETHRPRT increments when a fault is detected on an ethernet port.

Associated logs

The system generates the Ethernet log report (XAC329) when an ethernet packlet, port or link goes out of service.

The system generates the Ethernet condition cleared log report (XAC629) when the ethernet fault clears and the packlet, port or link returns to service.

Extension registers

There are no extension registers.

Register XATRAP

The XA-Core Trap (XATRAP) peg register counts the number of trap interrupts in the XA-Core system.

Register XATRAP release history

Release CSP104 introduces register XATRAP.

Associated registers

There are no associated registers.

Associated logs

The system generates the XATrap log report (XAC814) when the number of XA-Core traps exceeds the XATRAP alarm Threshold.

The system generates the XATrap Alarm Cleared log report (XAC614) when the high trap rate clears.

Extension registers

There are no extension registers.

Register XASWINI

The XA-Core System Warm Restart (XASWINI) peg register counts the number of warm restarts that result from a system action.

Register XASWINI release history

Release CSP104 introduces register XASWINI.

Associated registers

There are no associated registers.

Associated logs

There are no associated logs.

Extension registers

There are no extension registers.

Register XAMWINI

The XA-Core Manual Warm Restart (XAMWINI) peg register counts the number of warm restarts that result from a manual action.

Register XAMWINI release history

Release CSP104 introduces register XAMWINI.

Associated registers

There are no associated registers.

OM group XACSRVC (end)

Associated logs

There are no associated logs.

Extension registers

There are no extension registers.

Register XASCINI

The XA-Core System Cold Restart (XASCINI) peg register counts the number of cold restarts that result from a system action.

Register XASCINI release history

Release CSP104 introduces register XASCINI.

Associated registers

There are no associated registers.

Associated logs

There are no associated logs.

Extension registers

There are no extension registers.

Register XAMCINI

The XA-Core Manual Cold Restart (XAMCINI) peg register counts the number of cold restarts that result from a manual action.

Register XAMCINI release history

Release CSP104 introduces register XAMCINI.

Associated registers

There are no associated registers.

Associated logs

There are no associated logs.

Extension registers

There are no extension registers.

OM group XASTAT

OM description

The XASTAT OM group measures central processing unit (CPU) usage and call processing on an XA-Core. Also use OM group XASTAT to provision an XA-Core.

The XACSTAT OM group contains 13 OM usage registers and 3 OM peg registers.

XA-Core peg registers record the number of fault conditions on the XA-Core. XA-Core usage registers record the length of time a fault or alarm condition exists on the XA-Core.

Some OM registers are related to specific log reports and alarms. For details, see the table titled "Relations among logs, alarms, and OMs" in the chapter titled “Problem isolation and correction” in the *XA-Core Maintenance Manual*, 297-8991-510.

Release history

Usage register XASCMPLX is removed in CSP20.

CSP13 introduced OM group XASTAT.

Registers

OM group XASTAT registers display on the MAP terminal as follows.

```
XASUTIL     XASPUTIL    XASSCHED    XASFORE
XASMAINT    XASDNC      XASOM       XASGTERM
XASBKG      XASAUXCP    XASNETM     XASSNIP
XASPESC     XASNXFR     XASOVER     XASOTHLD
```

Group structure

OM group XASTAT provides one tuple per office.

Key field:
none

Info field:
none

OM group XASTAT (continued)

Related OM groups

OM group BRSTAT measures CPU usage on a BRISC SuperNode and or SuperNode XA-Core.
OM group CPUSTAT measures CPU usage on pre-BRISC Cores.
Both groups will contain zeros in each register of both the active and holding groups.

Related functional groups

There are no functional groups related to OM group XASTAT.

Associated functionality codes

There are no associated functionality codes.

Register XASUTIL

The Current payload usage register indicates the percentage of call processing capacity used within the provisioned recommendation for the grade of service specifications.

This register updates every minute to reflect the average call processing usage observed since the last OM transfer. The holding XASUTIL register retains the average call capacity usage calculated over the duration of the last OM transfer.

Register XASUTIL release history

CSP13 introduced register XASUTIL.

Related registers

There are no related registers.

Related logs

There are no related logs.

Extension registers

There are no extension registers.

Register XASPUTIL

The Peak payload usage register indicates XA-Core peak call processing usage.

This register updates every minute to reflect the peak minute call capacity usage observed since the last OM transfer. The holding XASPUTIL register retains the peak usage value observed over the duration of the last OM transfer.

Register XASPUTIL release history

CSP13 introduced register XASPUTIL.

Related registers

There are no related registers.

Related logs

There are no related logs.

Extension registers

There are no extension registers.

Register XASSCHED

The Scheduler overhead percent usage register indicates the ratio of scheduling overhead compared to the expected capacity.

The XASSCHED register updates every minute to reflect the average usage ratio for scheduler overhead since the last OM transfer occurred. The holding register contains the average usage ratio over the last OM transfer period.

Register XASSCHED release history

CSP13 introduced register XASSCHED.

Related registers

There are no related registers.

Related logs

There are no related logs.

Extension registers

There are no extension registers.

Register XASFORE

The Foreground percent usage register indicates the ratio of operating system overhead compared to the overhead allocated at capacity.

The XASFORE register updates every minute to reflect the average usage ratio for operating system overhead since the last OM transfer occurred. The holding register contains the average usage ratio over the last OM transfer period.

Register XASFORE release history

CSP13 introduced register XASFORE.

OM group XASTAT (continued)

Related registers

There are no related registers.

Related logs

There are no related logs.

Extension registers

There are no extension registers.

Register XASMAINT

The Maintenance class percent usage register indicates the ratio of maintenance usage compared to allocation.

The XASMAINT register updates every minute to reflect the average usage ratio for maintenance since the last OM transfer occurred. The holding register contains the average usage ratio over the last OM transfer period.

Register XASMAINT release history

CSP13 introduced register XASMAINT.

Related registers

There are no related registers.

Related logs

There are no related logs.

Extension registers

There are no extension registers.

Register XASDNC

The NOSFT class percent usage register indicates the ratio of NOSFT usage compared to allocation.

The XASDNC register updates every minute to reflect the average usage ratio for NOSFT since the last OM transfer occurred. The holding register contains the average usage ratio over the last OM transfer period.

Register XASDNC release history

CSP13 introduced register XASDNC.

Related registers

There are no related registers.

Related logs

There are no related logs.

Extension registers

There are no extension registers.

Register XASOM

The OM percent usage register indicates the ratio of OM usage compared to allocation.

The XASOM register updates every minute to reflect the average usage ratio for OMs since the last OM transfer occurred. The holding register contains the average usage ratio over the last OM transfer period.

Register XASOM release history

CSP13 introduced register XASOM.

Related registers

There are no related registers.

Related logs

There are no related logs.

Extension registers

There are no extension registers.

Register XASGTERM

The GTerm class percent usage register indicates the ratio of GTerm usage compared to GUARANTEED_TERMINAL_CPU_SHARE office parameter.

The XASGTERM register updates every minute to reflect the average usage ratio for GTerm since the last OM transfer occurred. The holding register contains the average usage ratio over the last OM transfer period.

Register XASGTERM release history

CSP13 introduced register XASGTERM.

Related registers

There are no related registers.

Related logs

There are no related logs.

OM group XASTAT (continued)

Extension registers

There are no extension registers.

Register XASBKG

The Background percent usage register indicates the ratio of background class usage compared to allocation.

The XASBKG register updates every minute to reflect the average usage ratio for background class usage since the last OM transfer occurred. The holding register contains the average usage ratio over the last OM transfer period.

Register XASBKG release history

CSP13 introduced register XASBKG.

Related registers

There are no related registers.

Related logs

There are no related logs.

Extension registers

There are no extension registers.

Register XASAUXCP

The AUXCP class percent usage register indicates the ratio of AUXCP usage compared to the AUXCP_CPU_SHARE office parameter.

The XASAUXCP register updates every minute to reflect the average usage ratio for AUXCP since the last OM transfer occurred. The holding register contains the average usage ratio over the last OM transfer period.

Register XASAUXCP release history

CSP13 introduced register XASAUXCP.

Related registers

There are no related registers.

Related logs

There are no related logs.

Extension registers

There are no extension registers.

Register XASNETM

The NETM class percent usage register indicates the ratio of NETMTC usage compared to allocation.

The XASNETM register updates every minute to reflect the average usage ratio for NETMTC since the last OM transfer occurred. The holding register contains the average usage ratio over the last OM transfer period.

Register XASNETM release history

CSP13 introduced register XASNETM.

Related registers

There are no related registers.

Related logs

There are no related logs.

Extension registers

There are no extension registers.

Register XASSNIP

The SNIP class percent usage register indicates the ratio of SNIP usage compared to allocation.

The XASSNIP register updates every minute to reflect the average usage ratio for SNIP since the last OM transfer occurred. The holding register contains the average usage ratio over the last OM transfer period.

Register XASSNIP release history

CSP13 introduced register XASSNIP.

Related registers

There are no related registers.

Related logs

There are no related logs.

Extension registers

There are no extension registers.

Register XASPESC

This peg register counts the number of one minute intervals during the transfer period in which a PE state change occurred.

OM group XASTAT (continued)

The XASPESC register increments once every minute when a PE state change occurs. The holding register contains the number of one minute intervals during which a PE state change occurs over the last OM transfer period.

A PE state change impacts the accuracy of capacity data collected over the time interval. OMs reported during the same transfer period as group XASPESC are less accurate. A higher peg count indicates less accuracy.

Register XASPESC release history

CSP13 introduced register XASPESC.

Related registers

There are no related registers.

Related logs

There are no related logs.

Extension registers

There are no extension registers.

Register XASNXFR

This peg register counts the number of transfer periods.

Register XASNXFR release history

CSP13 introduced register XASNXFR.

Related registers

There are no related registers.

Related logs

There are no related logs.

Extension registers

There are no extension registers.

Register XASOVER

This peg register counts the number of transfer periods during which system usage was greater than 100%.

Register XASOVER release history

CSP13 introduced register XASOVER.

Related registers

The XASOVER register increments every minute that register XASUTIL exceeds 100. The holding register contains the number of one minute intervals register XASUTIL exceeded 100 over the last OM transfer period.

Related logs

There are no related logs.

Extension registers

There are no extension registers.

Register XASOTHLD

This peg register counts the number of one minute intervals during which system utilization exceeded the office parameter CC_ENGLEVEL_WARNING_THRESHOLD.

Register XASOTHLD release history

CSP13 introduced register XASOTHLD.

Related registers

There are no related registers.

Related logs

There are no related logs.

Extension registers

There are no extension registers.

This page is left blank intentionally.

OM group IOCAP

OM description

The IOCAP OM group provides information on IO capacity such as utilization and throughput information. The OM group provides the information for each IO service type supported on the switch. Possible service types are CMIC, ETHR, and AMDI. The information provided by the OM group refers only to IO capacity provided by HIOP circuit packs (NTLX04) and by HCMIC circuit packs (NTLX17). It does not refer to IO capacity provided by packlets.

Here is an example of the information in the OM group.

```
          IOUTIL IOHWM TXMSGPS TXSIZE RXMSGPS RXSIZE IOTHRESH

1 AMDI       0     0       0      0       0      0       0

2 CMIC      17    18    1254    102    1254     63       0

3 ETHR      64    72   15204    105   13234     84       0
```

Release history

OM group IOCAP was developed for CSP21 and was patched back to CSP20.

Registers

OM group IOCAP registers display on the MAP terminal as follows.

```
IOUTIL      IOHWM       TXMSGPS     TXSIZE
RXMSGPS     RXSIZE      IOTHRESH
```

Group structure

OM group IOCAP provides one tuple per IO service type available in the office. Possible service types are CMIC, ETHR, and AMDI.

Key field:

IOCAP_OM_SERVICE_INFO This field indicates the IO service type whose capacity information is shown. Possible service types are CMIC, ETHR, and AMDI.

Info field:

none

Related OM groups

There are no related OM groups.

OM group IOCAP (continued)

Related functional groups

There are no related functional groups.

Associated functionality codes

There are no associated functionality codes.

Register IOUTIL

IOUTIL is a usage register holding the average utilization value of the specified IO service type (CMIC, ETHR, or AMDI). Each utilization value is a percentage. This value is accumulated every minute, and the average is calculated for every OM transfer period.

The IO-utilization calculation is based on a mathematical prediction and therefore is subject to error (+/- 10%). IO utilization can vary from minute to minute, even with a constant call rate, and depends on many factors, including the amount of non-payload work. The IO-utilization accuracy should fall within the +/- 10% range, even in the event of a single fault, for example, a single link failure. The IO-utilization accuracy may be outside of the range in the event of a double fault, for example, double card failure.

Register IOUTIL release history

Register IOUTIL was created for CSP21 and was patched back to CSP20.

Related registers

There are no related registers.

Related logs

There are no related logs.

Extension registers

There are no extension registers.

Register IOHWM

IOHWM is a high-watermark register holding the highest utilization value of the specified IO service type (CMIC, ETHR, or AMDI) over the OM transfer period.

Register IOHWM release history

Register IOHWM was created for CSP21 and was patched back to CSP20.

Related registers

There are no related registers.

Related logs

There are no related logs.

Extension registers

There are no extension registers.

Register TXMSGPS

TXMSGPS is a usage register. The value is a number of messages per second. It is the average total system number of outgoing messages per second of the specified IO service type (CMIC, ETHR, or AMDI). This value is accumulated every minute, and the average is calculated for every OM transfer period.

Register TXMSGPS release history

Register TXMSGPS was created for CSP21 and was patched back to CSP20.

Related registers

There are no related registers.

Related logs

There are no related logs.

Extension registers

There are no extension registers.

Register TXSIZE

TXSIZE is a usage register. The value is a message size, in bytes. It is the average size of an outgoing message of the specified IO service type (CMIC, ETHR, or AMDI). This value is accumulated every minute, and the average is calculated for every OM transfer period.

Register TXSIZE release history

Register TXSIZE was created for CSP21 and was patched back to CSP20.

Related registers

There are no related registers.

Related logs

There are no related logs.

Extension registers

There are no extension registers.

OM group IOCAP (continued)

Register RXMSGPS

RXMSGPS is a usage register. The value is a number of messages per second. It is the average total system number of received messages per second of the specified IO service type (CMIC, ETHR, or AMDI). This value is accumulated every minute, and the average is calculated for every OM transfer period.

Register RXMSGPS release history

Register RXMSGPS was created for CSP21 and was patched back to CSP20.

Related registers

There are no related registers.

Related logs

There are no related logs.

Extension registers

There are no extension registers.

Register RXSIZE

RXSIZE is a usage register. The value is a message size, in bytes. It is the average size of an incoming message of the specified IO service type (CMIC, ETHR, or AMDI). This value is accumulated every minute, and the average is calculated for every OM transfer period.

Register RXSIZE release history

Register RXSIZE was created for CSP21 and was patched back to CSP20.

Related registers

There are no related registers.

Related logs

There are no related logs.

Extension registers

There are no extension registers.

Register IOTHRESH

IOTHRESH is a peg register that counts the number of one-minute intervals in the transfer period during which the IO utilization for the service has exceeded the value of the IO_WARNING_THRESHOLD office parameter. This register is intended to give the customer a flexible warning that the IO system may require an upgrade.

OM group IOCAP (end)

Register IOTHRESH release history

Register IOTHRESH was created for CSP21 and was patched back to CSP20.

Related registers

There are no related registers.

Related logs

There are no related logs.

Extension registers

There are no extension registers.

This page is left blank intentionally.

3 Understanding XA-Core log reports

This chapter contains the following information about the log reports that are related to XA-Core:

- the format of log reports, beginning at "Log format" on page 1
- the event types by which log reports are classified, at "Event types" on page 7
- the types of logs that are generated, at "Log types" on page 10
- detailed information about individual log reports, at "CAP100" on page 15

For instructions for analyzing the root cause of difficult log reports, see the chapter titled “Problem isolation and correction” in the *XA-Core Maintenance Manual*, 297-8991-510.

Introduction

Log reports are a primary source of information to monitor the components of the XA-Core. Log reports

- identify faults on XA-Core components.
- provide information on system tests.
- identify possible actions for correcting alarm conditions.
- generate to indicate when an alarm condition clears.

Log format

A log report is composed of the following sections:

- the header
- the body

The following sections describe the header and body.

Standard (STD) log header

The log report header shows a summary of the event that generated the log report. The first line of every log report contains the log header. The log header

has 10 fields and every log report displays eight of these fields. The Office ID field and the Threshold field only appear when office parameters are set.

The standard log header is shown in the following figure.

Figure 3-1 XA-Core log header field display

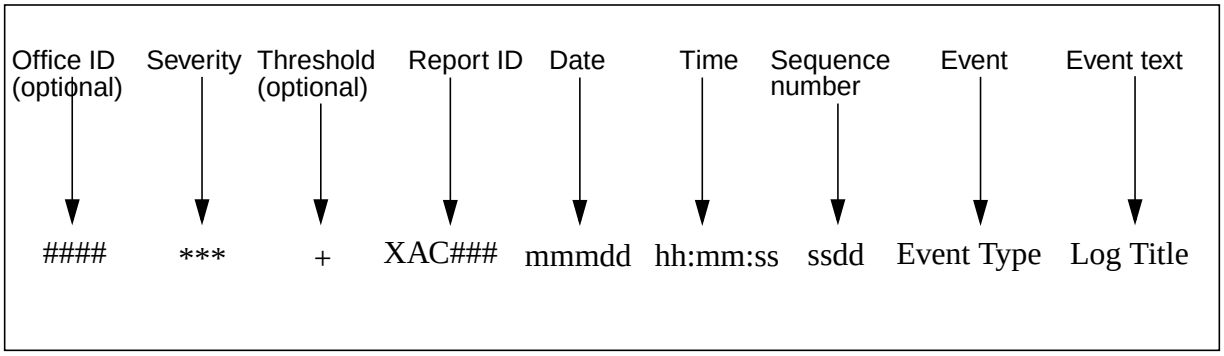

The standard log header field descriptions are provided in Table 3-1.

Table 3-1 Standard log header field descriptions (Sheet 1 of 2)

Field	Description	Entry	Log Type
Office ID (optional)	The Office ID field identifies the switch or office that generated the log report. This value is set in office parameter LOG_OFFICE_ID in table OFCVAR.	12 alphanumeric	Info/Action
Severity	Indicates the log severity. The log report displays asterisks to show the different severities. In an action log report, the log severity indicates the severity of the associated alarm condition.	3 asterisks (***) =critical 2 asterisks (**) =major 1 asterisk (*) =minor blank =no alarm	Info/Action
Threshold (optional)	The threshold field indicates if a threshold is set for that log report. A plus (+) sign in this field indicates that a threshold is set. A blank field indicates that no threshold is set.	+ or blank	Info/Action

Table 3-1 Standard log header field descriptions (Sheet 2 of 2)

Field	Description	Entry	Log Type
Report ID	The Report ID field id divided into two parts. The first part (XAC) of the field identifies the log group. The log group identifies the subsystem that generates the log report. The second part (###) of the field indicates the log report number. The log report number identifies the type of log report generated within that subsystem.	XAC###	Info/Action
Date	The date field indicates the month and day that the log report generates.	mmm=month (Jan. to Dec.) dd=day (01 to 31)	Info/Action
Time	The Time field indicates the exact hour, minute, and second the log report generates.	hh=hour (00 to 23) mm=minutes (00 to 59) ss=seconds (00 to 59)	Info/Action
Sequence number	The Sequence number field (ssdd) provides a unique four-digit number for each log report that generates. The first two digits (ss) indicate the global sequence number which increments each time a log report entry generates. The last two digits (dd) indicate the device-type sequence number which increments when a log report is sent to a log device. It is reset to 00 when it exceeds a value of 99.	ssdd= 0000 to 9999	Info/Action
Event	The Event field displays the system action or event that generated the log report.	FLT, INFO, RTS, ManB	Info/Action
Event Text	The Event text provides a brief description of the event.	Text string	Info/Action

Log body

The log report body displays information appropriate to the log type (Action or Information). The log body appears below the log header. In all cases, the reasons for an event are displayed in the log report.

Examples of the log body format for the action and information log reports appears in the following two figures. These figures do not contain the log header.

Figure 3-2 Log body for the Action log

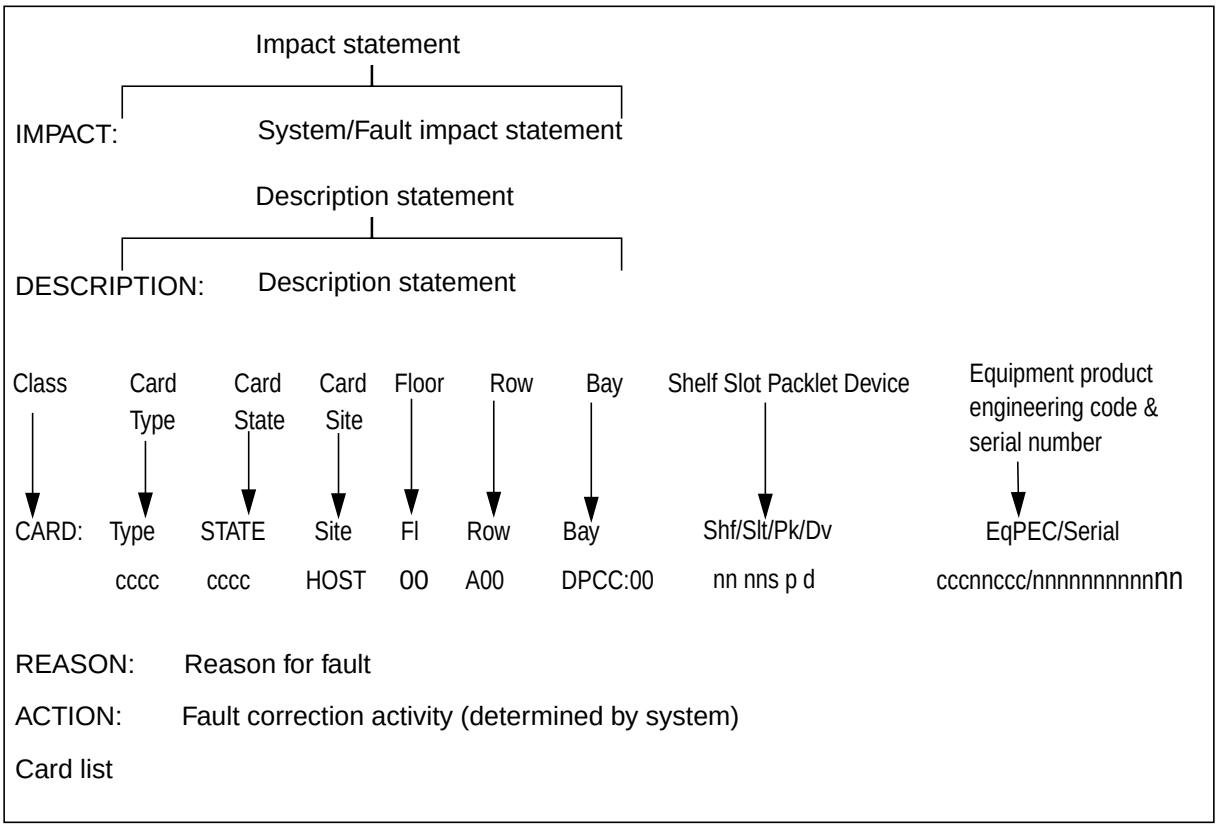

Figure 3-3 Log body for the XA-Core information log

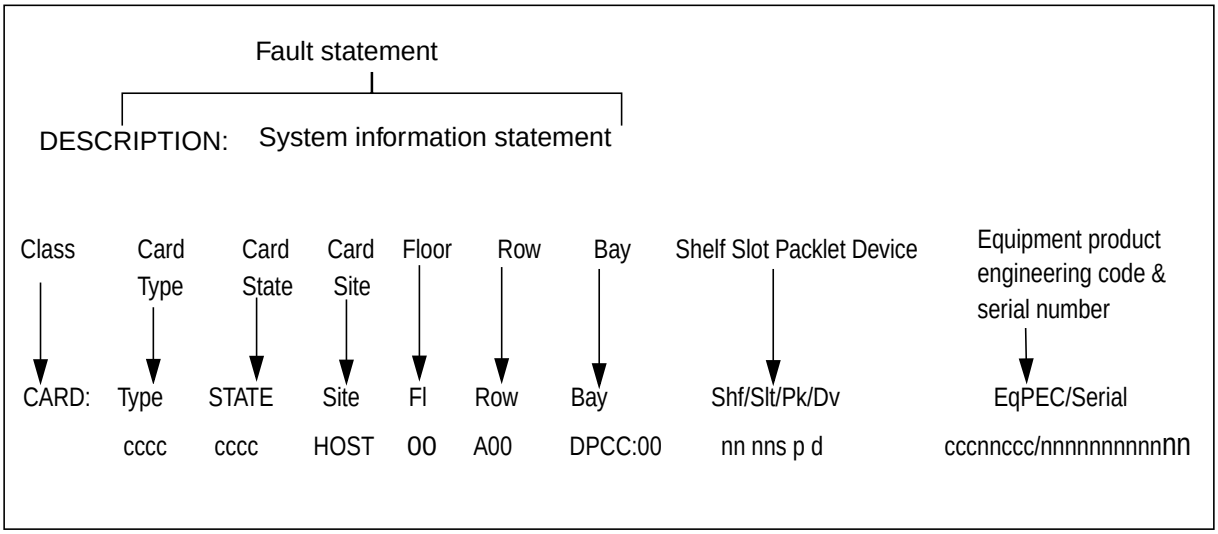

Log body field descriptions

Log body fields are described in Table 3-2. These fields appear in both action and information type log reports.

Table 3-2 Log body field descriptions (Sheet 1 of 3)

Field	Description	Entry	Log Type
Impact	The Impact field displays a system impact statement.	Text string	Action
Description	The Description field displays more detail about the system event. Information on the state change of a piece of equipment can also appear in this field.	Text string	Action/Info
Class	The Class field identifies the type of resource involved in the message: CARD (circuit pack or packlet), LINK, PORT, or TOD.	Text string	Action/Info
Card type	The Card type field only displays types of XA-Core circuit packs and packlets. This field, in conjunction with the Class field, identifies the resource involved in the log.	SM, PE, IO, Disk, Tape, CMIC, RTIF	Info/Action
State	The State field displays the current operational state of the circuit pack or packlet. The State field only displays for events related to circuit packs or packlets.	UnEq, InSv, OOS, IsTb, SysB, CBsy, ManB,	Info/Action

Table 3-2 Log body field descriptions (Sheet 2 of 3)

Field	Description	Entry	Log Type
Site	The Site field displays the site name of the switch that contains the circuit pack or packlet with a fault. The Site field only displays for events related to circuit packs or packlets.	Alphanumeric	Info/Action
Floor	The Floor field displays the floor position for the circuit pack or packlet with a fault. The Floor field only displays for events related to circuit packs or packlets.	Numeric	Info/Action
Row	The Row field displays the row position that contains the circuit pack or packlet with a fault. The Row field only displays for events related to circuit packs or packlets.	Alphanumeric	Info/Action
Bay	The Bay field displays the bay location (frame type and number) of the circuit pack or packlet with the fault. The Bay field only displays for events related to circuit packs or packlets.	Alphanumeric	Info/Action
Shf/Slt/Pk/Dv	This field displays the shelf and slot position of the resource with the fault. A packlet value is displayed if the resource involved in the log is a packlet or if it is a device on a packlet. A device value is displayed if the type of resource involved in the log is PORT, LINK, or TOD.	nn/nns p d where: nn/ = shelf number (0 to 3) /nn = slot number (01 to 18) s = F (front) or R (rear) p = packlet position U (upper) or L (lower) d = device (0 or 1)	Info/Action

Table 3-2 Log body field descriptions (Sheet 3 of 3)

Field	Description	Entry	Log Type
EqPEC/Serial	The EqPEC/Serial field displays the equipment product engineering code (EqPEC) and serial number of the circuit pack or packlet with the fault. The EqPEC/Serial field only displays for events related to circuit packs or packlets.	Alphanumeric	Info/Action
Reason	The Reason field displays a statement that describes the fault that has created the alarm condition.	Text string	Action
Action	The Action field displays the recommended action that operating company personnel can take to correct the fault.	Text string	Action
Card list	The Card List field displays a list of other circuit packs or packlets that can also be the source of the fault. This field is displayed only if other cards are involved in the log. The Card List field displays the CP or packlet weight (probability, shown as a percentage, that the CP or packlet contains a fault), card type, state, site, floor, row, bay, shelf and slot position, product engineering code and serial number for each CP or packlet.	Alphanumeric	Action

Event types

The event type is a field in the log header. The event type classifies the system event under a unique log category. Most log reports related to XA-Core use the following event types.

- Action log reports with the following subtypes:
  - Fault (FLT)
  - Trouble (TBL)
- Service summary (SUMM)
- Information (INFO)
- Exception (EXC) events indicate when the XA-Core system has experienced trouble during normal call processing.

Action event types

Action log reports generate when operating company personnel need to take action to correct the problem. Action log reports are associated with alarm conditions on the XA-Core.

Action logs indicate the detection of a fault on XA-Core equipment. Detection of a fault raises an alarm condition and generates an Action log report. In an action log report, the log severity (indicated by the severity field in the log header) indicates the severity of the associated alarm condition. The log report includes a recommended action that operating company personnel can follow to clear the alarm.

Action log reports display a fault (FLT) or Trouble (TBL) event type. Action log reports can display a cardlist to identify circuit packs and packlets that can also contain faults.

There are two types of Action log reports:

- Action log reports with a Trouble (TBL) event type. Action log reports with TBL event types indicate problems with switch operations or possible trouble with a piece of XA-Core equipment.
- Action log reports with a Fault (FLT) event type. Action log reports with FLT event types indicate the system detected a fault with a piece of XA-Core equipment.

The format for Trouble and Fault action log reports is illustrated in the following figure.

Figure 3-4 XA-Core Trouble and Fault action log report format

```
Alarm XACnnn mmmdd hh:mm:ss  ssdd  Event Type  Event Text
    IMPACT:  <System Impact Statement>
    DESCRIPTION: <Description Statement>
    Class:     Type State Site  FL  Row Bay    Shf/Slt/Pk/Dv EqPEC/Serial
               cccc cccc  cccc  nn cnn cccc:nn nn nns p d ccccnncc/nnnnnnnn
    REASON:  <Reason Statement>
    ACTION:  <Action Statement>
    FAULT RECORD ID: hhhhhhhh
    Check the following card(s) for possible source of fault.
            Weight Type Site FL Row Bay     Shf/Slt/Pk/Dv   EqPEC/Serial
            nnn% cccc cccc nn cnn cccc:nn nn nnc c  n nnnnccnn/cccccccccccc
            nnn% cccc cccc nn cnn cccc:nn nn nnc c  n nnnnccnn/cccccccccccc
             .... ..
            nnn% cccc cccc nn cnn cccc:nn nn nnc c  n nnnnccnn/cccccccccccc
```

The following figure shows another format used for Fault action log reports.

Figure 3-5 XA-Core Fault action log report format

```
Alarm XACnnn mmmdd hh:mm:ss  ssdd  Event Type  Event Text
         IMPACT: <System Impact Statement>
         REASON: <Reason Statement>
         ACTION: <Action Statement>
```

Service summary event type

Service Summary log reports provide a summary of events that occur during a sequence of events or a length of time. Service Summary log reports indicate the counts of successful or unsuccessful events that are too many to report separately.

Service Summary log reports have a SUMM event type.

Information event type

For an information log report, operating company personnel do not have to take any action. INFO event type log reports provide information about events such as alarm clearing, configuration changes, status reports and return to service (RTS) notifications.

> ***Note:*** Most information log reports have an INFO event type. Exceptions are XAC310 and XAC610, which have the MANB and RTS event types.

Examples of the information log report formats are shown in the following figures.

Figure 3-6 XA-Core Information log format

```
  XACnnn mmmdd hh:mm:ss  ssdd  Event Type  Event Text
DESCRIPTION: <Description Statement>
Class:     Type State Site  FL  Row Bay    Shf/Slt/Pk/Dv EqPEC/Serial
           cccc cccc  cccc  nn  cnn cccc:nn nn nns p d ccccnncc/nnnnnnnn
```

Another example of the other information log report format is shown in the following figure.

Figure 3-7 XA-Core Information log format

```
XACnnn mmmdd hh:mm:ss  ssdd  Event Type  Title text
   DESCRIPTION:<Description Statement>
```

Exception event type

Exception (EXC) events indicate that the XA-Core system has experienced either a software or hardware trouble during normal call processing.

Log types

The following types of logs are XA-Core related:

- XA-Core logs (type XAC)
- XA-Core memory blocking logs (type XACP)
- capacity logs (type CAP)
- lost logs (type LOST)
- footprint logs (type FPRT)
- time-of-day logs (type SOS)
- input/output audit logs (type IOAU)
- XA-Core resource-recovery logs (type XAUD)

XA-Core logs

XA-Core (XAC) log reports identify information from XA-Core cards, subsystem clocks, imaging, routine exerciser (REx) tests, and link tests. The XAC logs are in the range XAC300 to XAC814. Subsequent sections of this chapter contain detailed information about each of the XAC logs.

XA-Core memory blocking logs

XA-Core memory blocking (XACP) log reports indicate the degree of memory blocking that exists in the switch. The XACP logs are XACP300, XACP500, and XACP600. Subsequent sections of this chapter contain detailed information about each of the XACP logs.

Capacity logs

Capacity (CAP) logs provide capacity-monitoring information. The CAP logs are CAP100, CAP101, CAP102, and CAP103. Subsequent sections of this chapter contain detailed information about each of the CAP logs.

> ***Note:*** For information on capacity-monitoring, see the chapter titled "Capacity-monitoring tools in an XA-Core" in this document.

Lost logs

Lost (LOST) logs indicate an Exception (EXC) event type. An EXC event type means that the XA-Core system has experienced either a software or hardware trouble during normal call processing.

The switch generates LOST logs for lost messages or for message errors. Subsequent sections of this chapter contain detailed information about the following LOST logs, which are relevant to XA-Core: LOST110, LOST111, LOST116, and LOST117.

Note: For information about the complete set of LOST logs, see the *DMS-100 Log Report Reference Manual*, 297-8021-840 (North American market) or 297-9051-840 (International market).

Footprint logs (type FRPT)

The switch generates footprint (FPRT) log reports after a switch restart. The footprint log report contains snapshot data on the XA-Core.

The following list identifies footprint logs and their triggers.

Table 3-3 Footprint logs

Log title	Log description	Trigger
FPRT105	Successful Footprint	Snapshot data reported on XA-Core footprint after a switch restart.
FPRT106	Footprint Not Collected	Footprint not collected for XA-Core after a switch restart.

Note: The information collected over a restart goes into the footprint buffers. To inspect the footprint buffers, you use the commands in the FOOTPRT MAP level. For instructions on how to access the FOOTPRT MAP level, and for a list of commands available at that level, see *Nonmenu Commands Historical Reference Manual* (volume 2), 297-1001-8202. At the FOOTPRT MAP level, you can use the help command to obtain online information about command syntax and command parameters. For instructions on how to use the help command, see the chapter titled “On-line command information” in *DMS Family Commands Reference Manual*, 297-1001-822.

Time-of-day logs

Time-of-day (SOS) log reports indicate the status of the time-of-day value maintained by XA-Core. SOS log reports are generated only if the time of day

is set to the Network Time Protocol (NTP) standard. This applies only in the German market.

> ***Note:*** The setting of office parameter SNTP_CLIENT in table OFCENG determines whether the NTP standard is used.

The time-of-day logs are SOS701, SOS702, and SOS703. Subsequent sections of this chapter contain detailed information about each of the time-of-day logs.

> ***Note 1:*** The TOD alarms are visible in the TOD field, at the following MAP level: MAPCI;MTC;APPL;OAMAP.
>
> ***Note 2:*** For information on setting and querying the time-of-day clock, see "How to check and adjust the XA-Core TOD" in the *XA-Core Maintenance Manual*, 297-8991-510.

Input/output audit logs (type IOAU)

The switch generates input/output audit (IOAU) log reports that provide information related to input/output (I/O) audits.

The following list identifies the input/output audit log reports and their triggers.

Table 3-4 Input/output audit logs

Log	Title	Trigger
IOAU112	REX Scheduler Notice	Scheduler notice for routine exercise (REx) test.

XA-Core resource-recovery logs (type XAUD)

An XA-Core resource-recovery log is generated whenever a call-processing resource is recovered by an audit process that runs on the XA-Core.

The log code is XAUDnnn, where nnn is an integer in the range 600 to 610 or in the range 700 to 955.

All XAUD logs are informational logs, of type INFO.

XAUD logs help Nortel personnel to track down potentially lost internal resources.

If your system generates XAUD logs, no action on your part is required.

Log throttling

During system operation, as log messages are generated, the system sends the messages to log devices (devices that print or display the messages), and to disk (referred to a Disk Log).

If you want to limit the number of log messages the system sends to these destinations, you can specify log throttling. You can specify throttling against a specific log, for example, TRK113. Alternatively, you can specify throttling against a log-report group, for example, TRK. You specify a reporting interval, such as five minutes, and a threshold, such as 100.

You can specify throttling for logs generated in the XA-Core. This includes more logs than those described in this manual. (This manual contains description of logs that pertain to the functioning of the XA-Core and its components.) For information on the log groups, see *DMS-100 Log Report Reference Manual*, 297-8021-840 (North American market) or 297-9051-840 (International market).

The system counts log messages that occur during the reporting interval. If, during the interval, the number of specified log messages reaches the specified threshold value, then the system throttles any additional such log messages. That means the system does not send those additional log messages to the log devices. You have the option of extending the throttling to Disk Log too, in which case the system applies the same limits to log messages going to that destination.

At the expiry of the reporting interval, the system resets the counters to zero, cancels any existing throttling, and resumes sending log messages to their destinations.

You specify log throttling in table LOGTHROT. See the description of table LOGTHROT in the chapter titled "XA-Core data schema overview" in this document. For instructions for specifying log throttling, see the procedure titled “How to specify log throttling” in the chapter titled “Introduction to routine maintenance procedures” in the *XA-Core Maintenance Manual*, 297-8991-510.

This page is left blank intentionally.

CAP100

Explanation

The CAP100 log provides a summary of the system's capacity usage for the previous 15 minutes. It provides averages of the numerical data reported at the CAPACITY MAP level during 15-minute sample. (The following figure shows the location of the CAPACITY level in the hierarchy of MAP levels.)

The log generates once every 15 minutes when activated by the STRTLOG command.

Location of the CAPACITY MAP level

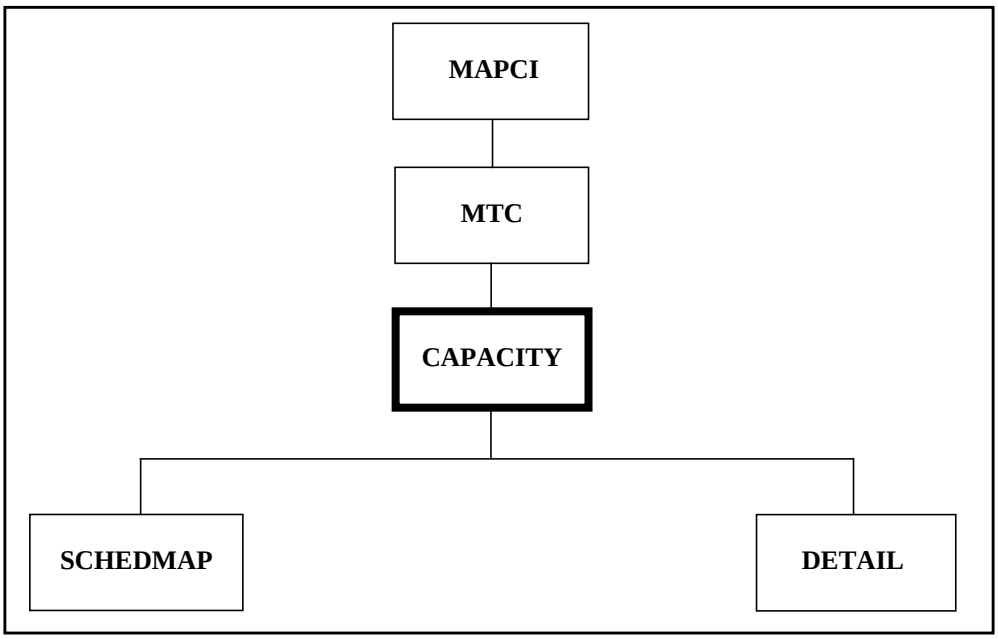

Event type

Informational (INFO).

CAP100 (continued)

Format

The format for log CAP100 follows:

```
Switch Reportid mmmdd hh:mm:ss ssdd Event type Log title
CATMP/HR  <nn>   UTIL  <nn>   ENGCATMP  <nn>   MAXCATMP  <nn>
```

Example

An example of log CAP100 follows:

```
MTXJ10AF CAP100 JUN26 12:47:19 6000 INFO CAPACITY_SUMMARY
CATMP/HR  120000   UTIL  75   ENGCATMP  160000   MAXCATMP  2000000
```

Field descriptions

The following table explains each of the fields in the log report:

Field	Value	Description
Switch		Identifies the switch
Reportid	CAP100	The Reportid field displays the log group (CAP) and identification number of the log report.
Event type	INFO	The Event Type displays the type of event identified in the log report.
Log title	CAPACITY_SUMMARY	The Reportid field displays the log group and identification number of the log report.
CATMP/HR	Numeric	Call attempts per hour.
UTIL	Numeric	A percentage representing the summary of capacity activity for the last 15 minutes.
ENGCATMP	Numeric	Projected engineered call attempts per hour at which all grade-of-service specifications are met. This value is based on the Rated Power of the office, and does not take the processing power of the spare PE into account.
MAXCATMP	Numeric	Projected maximum call attempts per hour at which all grade-of-service specifications are met. This value includes all PEs, including those provisioned for reliability.

Action

There is no action required.

CAP100 (end)

Related OM registers

The registers in OM group XASTAT.

Additional information

The CAP-log buffer is a circular buffer. When the buffer has filled up, each new CAP log report overwrites the oldest CAP log report in the buffer. When you display the CAP log reports using LOGUTIL or DLOG, you may encounter one or more instances of the message, “Log not available or overwritten due to log throttling.” This message is displayed if a log report in the buffer is so old that it no longer makes sense, or if a log report is incomplete because it has been overwritten by new data.

The CAP log buffer can hold up to three hours’ worth of CAP log reports.

> ***Note:*** The three hours need not be three consecutive hours. For example, if you disable CAP logs for a length of time and then enable them again, the log reports in the buffer will be from non-consecutive hours.

CAP log reports survive warm and cold restarts.

This page is left blank intentionally.

CAP101

Explanation

The CAP101 log provides the user data reported at the CAPACITY MAP level. (The following figure shows the location of the CAPACITY level in the hierarchy of MAP levels.)

The log generates three times every 15 minutes. Each time it generates, it provides information about the previous five minutes. The information refers to five one-minute intervals.

The log activates when the user enters the STRTLOG command.

Location of the CAPACITY MAP level

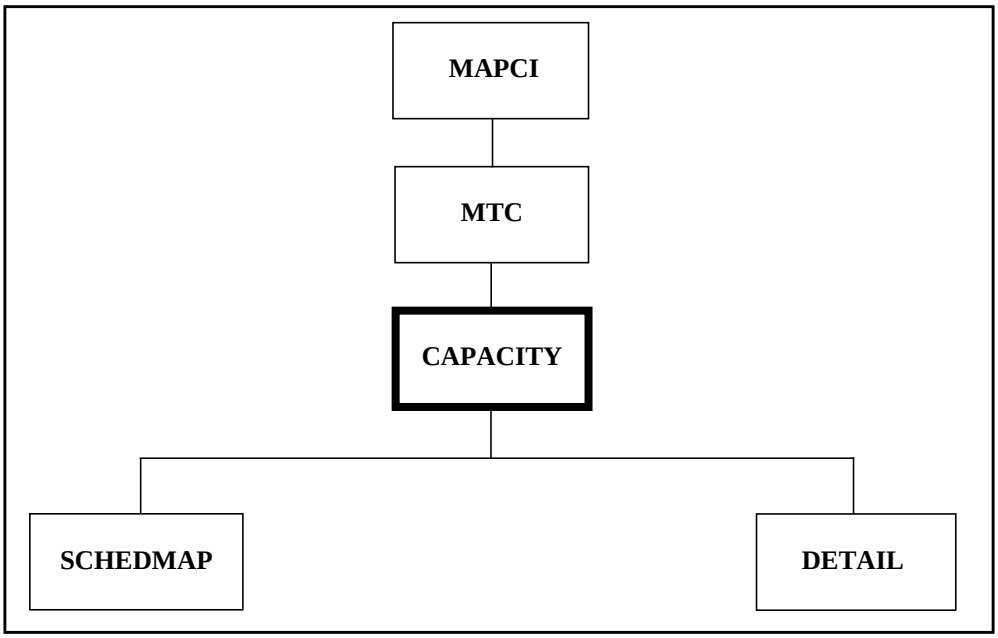

Event type

Informational (INFO).

Format

The format for log CAP101 follows:

```
Switch Reportid mmmdd hh:mm:ss ssdd Event type Log title

<min.>:   CATMP/HR  <nn>   UTIL  <nn>   ENGCATMP  <nn>   MAXCATMP  <nn>
ENGLEVEL <ABOVE|BELOW> CCOVRLD <ON|OFF> IOOVRLD <OFF|CMIC|ETHR|CMIC-ETHR>
PESC <YES|NO>
```

CAP101 (continued)

Example

An example of log CAP101 follows:

```
MTXJ10AF CAP101 JUN26 12:47:19 6000 INFO CAPACITY_DATA

11:  CATMP/HR  120000   UTIL  75   ENGCATMP  160000   MAXCATMP  200000
ENGLEVEL BELOW CCOVRLD  OFF  IOOVRLD  OFF  PESC  NO

12:  CATMP/HR  112000   UTIL  70   ENGCATMP  160000   MAXCATMP  200000
ENGLEVEL BELOW CCOVRLD  OFF  IOOVRLD  OFF  PESC  NO

13:  CATMP/HR  112000   UTIL  70   ENGCATMP  160000   MAXCATMP  200000
ENGLEVEL BELOW CCOVRLD  OFF  IOOVRLD  OFF  PESC  NO

14:  CATMP/HR  120000   UTIL  75   ENGCATMP  160000   MAXCATMP  200000
ENGLEVEL BELOW CCOVRLD  OFF  IOOVRLD  OFF  PESC  NO

15:  CATMP/HR  120000   UTIL  75   ENGCATMP  160000   MAXCATMP  200000
ENGLEVEL BELOW CCOVRLD  OFF  IOOVRLD  OFF  PESC  NO
```

Field descriptions

The following table explains each of the fields in the log report:

Field	Value	Description
Switch		Identifies the switch
Reportid	CAP101	The Reportid field displays the log group (CAP) and identification number of the log report.
Event type	INFO	The Event Type displays the type of event identified in the log report.
Log title	CAPACITY_DATA	The Reportid field displays the log group and identification number of the log report.
CATMP/HR	Numeric	Call attempts per hour.
UTIL	Numeric	Current call attempts as a percentage of engineered call attempts.
ENGCATMP	Numeric	Projected engineered call attempts per hour at which all grade-of-service specifications are met. This value is based on the Rated Power of the office, and does not take the processing power of the spare PE into account.
MAXCATMP	Numeric	Projected maximum call attempts per hour at which all grade-of-service specifications are met. This value includes all PEs, including those provisioned for reliability.

CAP101 (continued)

Field	Value	Description
ENGLEVEL	ABOVE or BELOW	Boolean, indicating whether utilization is above or below the value set for office parameter CC_ENGLEVEL_WARNING_THRESHOLD.
CCOVRLD	ON or OFF	Boolean, indicating the status of the central control overload controls.
IOOVRLD	OFF or CMIC or ETHR or CMIC-ETHR	Indicates the status of the IO overload controls. The system monitors the usage of the CMIC and ethernet messaging. When the messaging rate exceeds a threshold, the system activates overload control. When activated, overload control causes the system to reject new call originations. The system deactivates overload control when the messaging rate declines to a rate that does not exceed the threshold. The value CMIC indicates that the CMIC messaging rate has exceeded the CMIC messaging threshold, causing the system to activate CMIC overload control. The value ETHR indicates that the ethernet messaging rate has exceeded the ethernet messaging threshold, causing the system to activate ethernet overload control. The value CMIC-ETHR indicates that the CMIC messaging rate has exceeded the CMIC messaging threshold and the ethernet messaging rate has exceeded the ethernet messaging threshold, causing the system to activate CMIC overload control and ethernet overload control.
PESC	YES or NO	Boolean, indicating whether a PE state change occurred.

Action

There is no action required.

Related OM registers

The registers in OM group XASTAT.

Additional information

The CAP-log buffer is a circular buffer. When the buffer has filled up, each new CAP log report overwrites the oldest CAP log report in the buffer. When you display the CAP log reports using LOGUTIL or DLOG, you may encounter one or more instances of the message, “Log not available or overwritten due to log throttling.” This message is displayed if a log report in the buffer is so old that it no longer makes sense, or if a log report is incomplete because it has been overwritten by new data.

CAP101 (end)

The CAP log buffer can hold up to three hours' worth of CAP log reports.

> ***Note:*** The three hours need not be three consecutive hours. For example, if you disable CAP logs for a length of time and then enable them again, the log reports in the buffer will be from non-consecutive hours.

CAP log reports survive warm and cold restarts.

CAP102

Explanation

The CAP102 log provides the user data reported at the SCHEDMAP MAP level. (The following figure shows the location of the SCHEDMAP level in the hierarchy of MAP levels.)

The log generates three times every 15 minutes. Each time it generates, it provides information about the previous five minutes. The information refers to five one-minute intervals.

The log activates when the user enters the STRTLOG command.

Location of the SCHEDMAP MAP level

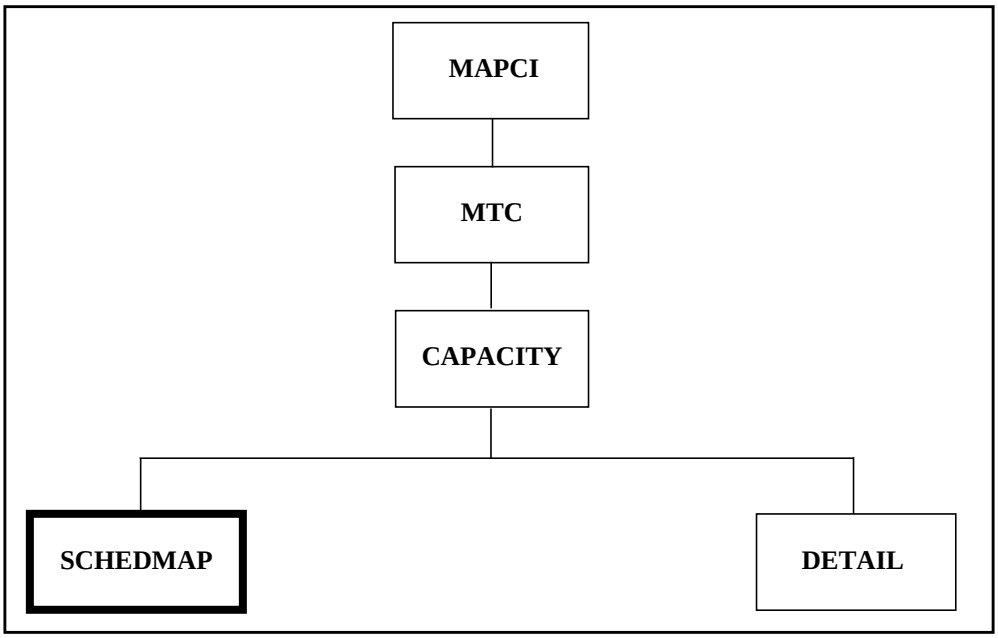

Event type

Informational (INFO).

Format

The format for log CAP102 follows:

```
Switch Reportid mmmdd hh:mm:ss ssdd Event type Log title

<min.>: SCHED <n>  FORE  <n>  MAINT <n>  DNC <n>  AUXCP <n>
OM <n>  GTERM <n>  BKG <n>  NETM <n>  SNIP <n>  IO <n>
```

CAP102 (continued)

Example

An example of log CAP102 follows. This is the third of three instances of the log generated during a 15-minute period.

```
MTXJ10AF CAP102 AUG16 16:53:13 3400 INFO CAPACITY_SCHEDMAP

11: SCHED  85  FORE  75  MAINT  80  DNC  66  AUXCP  100
OM  95  GTERM  50  BKG  300  NETM  0  SNIP  20  IO  0

12: SCHED  85  FORE  75  MAINT  80  DNC  66  AUXCP  100
OM  95  GTERM  50  BKG  300  NETM  0  SNIP  20  IO  0

13: SCHED  85  FORE  75  MAINT  80  DNC  66  AUXCP  100
OM  95  GTERM  50  BKG  300  NETM  0  SNIP  20  IO  0

14: SCHED  85  FORE  75  MAINT  80  DNC  66  AUXCP  100
OM  95  GTERM  50  BKG  300  NETM  0  SNIP  20  IO  0

15: SCHED  85  FORE  75  MAINT  80  DNC  66  AUXCP  100
OM  95  GTERM  50  BKG  300  NETM  0  SNIP  20  IO  0
```

Field descriptions

The following table explains each of the fields in the log report:

Field	Value	Description
Switch		Identifies the switch
Reportid	CAP102	The Reportid field displays the log group (CAP) and identification number of the log report.
Event type	INFO	The Event Type displays the type of event identified in the log report.
Log title	CAPACITY_ SCHEDMAP	The Reportid field displays the log group and identification number of the log report.
SCHED	numeric	Percentage indicating observed scheduler overhead utilization relative to the expected overhead occupancy at capacity
FORE	numeric	Percentage indicating observed operating system utilization relative to the expected occupancy at capacity. Foreground includes SYSTEMCLASS, SYSTOOLCLASS, INITCLASS.
MAINT	numeric	Percentage indicating observed MAINTCLASS utilization relative to the expected occupancy at capacity
DNC	numeric	Percentage indicating observed NOSFTCLASS utilization relative to the expected occupancy allocated at capacity. DNC includes NOSFT class
AUXCP	numeric	Percentage indicating observed AUXCPCLASS utilization relative to the expected occupancy at capacity. This value can be altered via the office parm AUXCP_CPU_SHARE

CAP102 (end)

Field	Value	Description
OM	numeric	Percentage indicating observed OM utilization relative to the expected occupancy at capacity. OM includes GOMCLASS and NGOMCLASS
GTERM	numeric	Percentage indicating observed GTERMCLASS utilization relative to the expected occupancy at capacity. This value can be altered via the office parm GUARANTEED_TERMINAL_CPU_SHARE
BKG	numeric	Percentage indicating observed background classes utilization relative to the expected occupancy at capacity. Background includes BKGCLASS and AUDITCLASS
NETM	numeric	Percentage indicating observed NETMTCCLASS utilization relative to the expected occupancy allocated at capacity
SNIP	numeric	Percentage indicating observed SNIPCLASS utilization relative to the expected occupancy at capacity
IO	numeric	Percentage indicating IO utilization, as a proportion of the expected maximum IO utilization.

Action

There is no action required.

Related OM registers

The registers in OM group XASTAT.

Additional information

The CAP-log buffer is a circular buffer. When the buffer has filled up, each new CAP log report overwrites the oldest CAP log report in the buffer. When you display the CAP log reports using LOGUTIL or DLOG, you may encounter one or more instances of the message, “Log not available or overwritten due to log throttling.” This message is displayed if a log report in the buffer is so old that it no longer makes sense, or if a log report is incomplete because it has been overwritten by new data.

The CAP log buffer can hold up to three hours’ worth of CAP log reports.

> ***Note:*** The three hours need not be three consecutive hours. For example, if you disable CAP logs for a length of time and then enable them again, the log reports in the buffer will be from non-consecutive hours.

CAP log reports survive warm and cold restarts.

This page is left blank intentionally.

CAP103

Explanation

The CAP103 log provides the user data reported at the DETAIL MAP level. (The following figure shows the location of the DETAIL level in the hierarchy of MAP levels.)

The log generates three times every 15 minutes. Each time it generates, it provides information about the previous five minutes. The information refers to five one-minute intervals.

The log activates when the user enters the STRTLOG command.

Location of the DETAIL MAP level

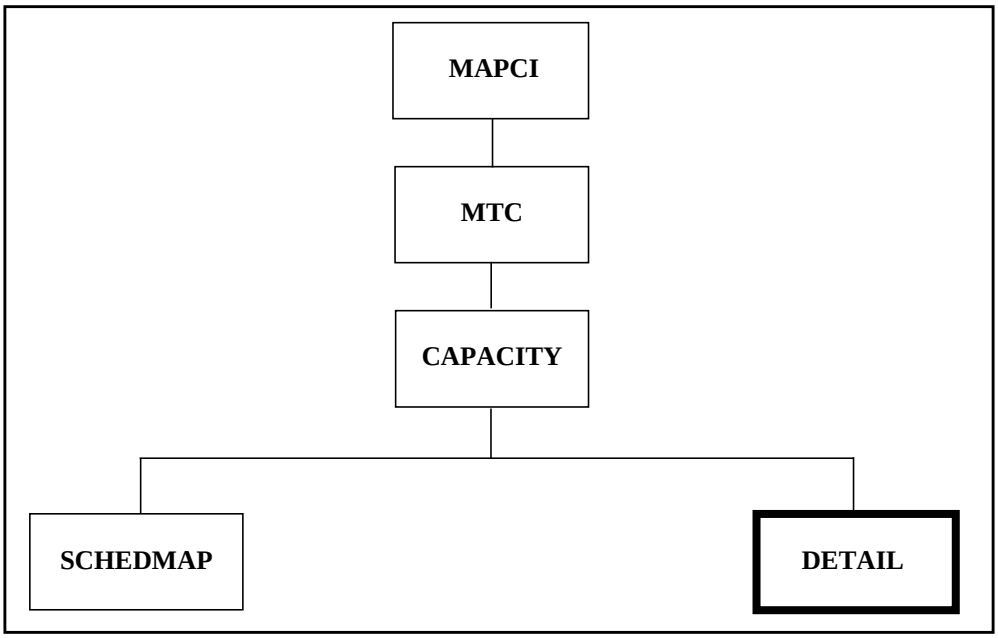

Event type

Informational (INFO).

Format

The format for log report CAP103 follows.

```
Switch Reportid mmmdd hh:mm:ss ssdd Event type Log title

<min.>: OAvgDel <n>ms 95%OLim <n>ms PAvgDel <n>ms 95%PLim <n>
BAvgDel <n>ms  95%BLim <n>ms  MAvgDel <n>ms  95%MLim <n>ms
```

CAP103 (continued)

Example

An example of log report CAP103 follows.

```
MTXJ10AF CAP103 AUG16 16:53:13 3400 INFO CAPACITY_DETAIL

11: OAvgDel 17ms  95%OLim  45ms  PAvgDel 13ms  95%Plim 25ms
BAvgDel 12ms  95%BLim 25ms  MAvgDel 11ms  95%MLim 25ms

12: OAvgDel  8ms  95%OLim  45ms  PAvgDel 13ms  95%Plim 25ms
BAvgDel 12ms  95%BLim 25ms  MAvgDel 11ms  95%MLim 25ms

13: OAvgDel 17ms  95%OLim  45ms  PAvgDel 13ms  95%Plim 25ms
BAvgDel 12ms  95%BLim 25ms  MAvgDel 13ms  95%MLim 25ms

14: OAvgDel 18ms  95%OLim  45ms  PAvgDel 13ms  95%Plim 25ms
BAvgDel 12ms  95%BLim 25ms  MAvgDel 12ms  95%MLim 25ms

15: OAvgDel 17ms  95%OLim  45ms  PAvgDel 13ms  95%Plim 25ms
BAvgDel 12ms  95%BLim 25ms  MAvgDel 12ms  95%MLim 25ms
```

Field descriptions

The following table explains each of the fields in the log report:

Field	Value	Description
Switch		Identifies the switch
Reportid	CAP103	The Reportid field displays the log group (CAP) and identification number of the log report.
Event type	INFO	The Event Type displays the type of event identified in the log report.
Log title	CAPACITY_DETAIL	The Reportid field displays the log group and identification number of the log report.
OAvgDel	numeric	Weighted average waiting time on the CCB originating queue.
95%OLim	numeric	This represents the 95% high water mark for the CCB originating queue.
PAvgDel	numeric	Weighted average waiting time on the CCB progress queue.
95%PLim	numeric	This represents the 95% high water mark for the CCB progress queue.
BAvgDel	numeric	Weighted average waiting time on the Background (BKGCLASS) ready queue.
95%BLim	numeric	This represents the 95% high water mark for the Background ready queue.

CAP103 (end)

Field	Value	Description
MAvgDel	numeric	Weighted average waiting time on the Maintenance (MAINTCLASS) ready queue.
95%MLim	numeric	This represents the 95% high water mark for the Maintenance ready queue.

Action

There is no action required.

Related OM registers

The registers in OM group XASTAT.

Additional information

The CAP-log buffer is a circular buffer. When the buffer has filled up, each new CAP log report overwrites the oldest CAP log report in the buffer. When you display the CAP log reports using LOGUTIL or DLOG, you may encounter one or more instances of the message, “Log not available or overwritten due to log throttling.” This message is displayed if a log report in the buffer is so old that it no longer makes sense, or if a log report is incomplete because it has been overwritten by new data.

The CAP log buffer can hold up to three hours’ worth of CAP log reports.

> ***Note:*** The three hours need not be three consecutive hours. For example, if you disable CAP logs for a length of time and then enable them again, the log reports in the buffer will be from non-consecutive hours.

CAP log reports survive warm and cold restarts.

This page is left blank intentionally.

LOST110

Explanation

LOST110 occurs when Call Processing gets a failure indication on attempting to output a message.

LOST110 in XA-Core

Log LOST110 is also generated in XA-Core when the messaging system cannot send the message due to faults other than routing trouble. These faults include:

- No buffer is available to enqueue the message for the outgoing message process.
- Failed to enqueue the message for the outgoing message process.
- The destination node has exceeded a congestion level.
- A user error is detected by the messaging system.

When the log is generated, a message is lost. The impact of losing a message depends on the importance of the message. This log is used to alert the craftperson and helps in debugging the messaging problem.

LOST110 (continued)

Format

The log report format for LOST110 is as follows:

```
LOST110 mmmdd hh:mm:ss ssdd EXC aaa
        Message TID: Node=aaa, Terminal=aaa, Device=aaa
        Time of Event: aaa
        Message Dump:
            aaa...
        Application Data:
            Buffer: aaa
            Physical: aaa...
            IOUI: aaa...
        Reported by: aaa...
```

Example

An example of log report LOST110 follows:

```
XASKY07BA     LOST110 SEP16 12:06:02 8800 EXC  MSG TOSSED
        Message TID: Node=32, Terminal=310, Device=DTC 20
        Time of Event: 12:06:02.275
        Message Dump:
            710F B102 0100 5419 FD55 FC1A 860E FE12 0001 0015
            2020 3F6B 840F 8507 0145 FDFD FDFD FDFD FDFD FDFD
            FDFD FDFD FDFD FDFD FDFD FDFD FDFD FDFD
        Application Data:
            Buffer: DS30
            Physical: FDFD FDFD
            IOUI: 2600 FDFD 1020 FD36
        Reported by: 01FF37E4=CPIOUI.JG07:FASTCP_DISPATCH+#0AB4
                     01FE6254=ISUPISUP.CY01:ISUP_ISU+#1194
                     0043E1A0=ISUPXPR.CS04:ISUP_XPR+#1040
                     01FC1D6C=ISUPHDLR.CL02:Q764_SEL+#028C
                     01FB9E2C=EDTKCPUI.BC01:EVENT_DR+#022C
```

LOST110 (end)

Field descriptions

The following table describes each field in the log report:

Field	Value	Description
EXC	Constant	Identifies the log class (software execution event).
MSG TOSSED	Constant	Identifies the log error condition.
Node	Decimal number	Identifies the peripheral internal node number.
Terminal	Decimal number	Identifies the peripheral internal terminal number.
Device	Text	Identifies the peripheral external node name.
Time of Event	Decimal number	Indicates the time of day (format hour:minute:second:fraction) when the event occurred.
Message Dump	Hexadecimal number	Indicates the contents of the message.
Buffer	Text	Indicates the type of software buffer.
Physical	Hexadecimal number	Identifies the routing header.
IOUI	Hexadecimal number	Identifies the network header.
Reported by	Text	Indicates five-level software traceback.

Action

No immediate action is required as the problem may be transient. Should this log occur more than three times in one minute, then retain the logs and contact the next level of support.

Associated OM registers

There are no associated OM registers.

Additional information

A LOST log is generated whenever the I/O system or an application is unable to deliver a message. The discarded message is displayed in the log. The impact of discarding a message depends on the importance of the message. This cannot be determined by the I/O system as it has no understanding of message contents. A LOST log is used to alert the craftsperson to a possible problem (for example, a hardware fault, or bad configuration data).

This page is left blank intentionally.

LOST111

Explanation

LOST111 occurs when an incoming message cannot be delivered. The specific failure reason is displayed in the log.

Format

The log report format for LOST111 is as follows:

```
LOST111 mmmdd hh:mm:ss ssdd EXC aaa
  Message TID: Node=aaa, Terminal=aaa, Device=aaa, Bad IP=aaa
  Time of Event: aaa
  Message Dump:
      aaa...
  Application Data:
      Buffer: aaa
      Physical: aaa...
      IOUI: aaa...
      IH Error: Reason=aaa Data=aaa
  Reported by: aaa...
```

Example

An example of log report LOST111 follows:

```
MERCURY_MSC LOST111 SEP16 08:12:38 5700 EXC INPUT HANDLER ERROR
        Message TID: Node=9, Terminal=2, Device=GWC 20, Bad IP=47.111.6.231
        Time of Event: 08:12:38.810
        Message Dump:
            01BE 0237 0A02 0000 4974 A9A0 0034 FFFF 0000 0000
            0000 0000 0000 0000 0000 0000 0000 0000 0000 0000
            0000 0000 0000 0000 0000 0000 60F9 00E2
        Application Data:
            Buffer: DS30
            Physical: FFFF FFFF
            IOUI: 4000 FFFF 60F9 00E2
            IH Error: Reason=BAD_CPTLB_STATE Data=0003
        Reported by: 0535EE38=XACPHAND.BG03:XCP_APPL+#1238
                     00A6D020=XAIONET.BC01:INJECT_I+#0260
                     00497C30=IOCPBASE.BQ01:SENDIOMS+#0250
                     0613F808=GCMMSGXA.AH02:X_CGMMSG+#0268
                     019A5094=GCMMSGUI.BM01:GCMMSG_SEND_M+#0034
```

LOST111 (continued)

Field descriptions

The following table describes each field in the log report:

Field	Value	Description
EXC	Constant	Identifies the log class (software execution event).
INPUT HANDLER ERROR	Constant	Identifies the log error condition.
Node	Decimal number	Identifies the peripheral internal node number.
Terminal	Decimal number	Identifies the peripheral internal terminal number.
Device	Text	Identifies the peripheral external node name.
Bad IP	Decimal Integer	Indicates the source IP address. This is applicable only to Succession IP-based nodes.
Time of Event	Decimal number	Indicates the time of day (format hour:minute:second:fraction) when the event occurred.
Message Dump	Hexadecimal number	Indicates the contents of the message.
Buffer	Text	Indicates the type of software buffer.
Physical	Hexadecimal number	Identifies the routing header.
IOUI	Hexadecimal number	Identifies the network header.
Reason	Text	Indicates additional diagnostic information (character based).
Data	Hexadecimal number	Indicates additional diagnostic information (numeric based).
Reported by	Text	Indicates five-level software traceback.

Action

No immediate action is required as the problem may be transient. Should this log occur more than three times in one minute, then retain the logs and contact the next level of support.

Associated OM registers

There are no associated OM registers.

LOST111 (end)

Additional information

A LOST log is generated whenever the I/O system or an application is unable to deliver a message. The discarded message is displayed in the log. The impact of discarding a message depends on the importance of the message. This cannot be determined by the I/O system as it has no understanding of message contents. A LOST log is used to alert the craftsperson to a possible problem (for example, a hardware fault, or bad configuration data).

This page is left blank intentionally.

LOST116

Explanation

LOST116 occurs when an outgoing message is lost in the sending path. The faults that cause this are:

- XA-Core messaging path fails to get a BMS buffer to enqueue the application message.
- XA-Core messaging path fails to copy the application's message to the BMS buffer.
- XA-Core messaging path fails to send the application's message due to unavailable routing destination.

LOST116 occurs when an outgoing message encounters a failure. The specific failure reason is displayed in the log.

LOST116 (continued)

Format

The log report format for LOST116 is as follows:

```
LOST116 mmmdd hh:mm:ss ssdd EXC aaa
  Message TID: Node=aaa, Terminal=aaa, Device=aaa
  Time of Event: aaa
  Message Dump:
      aaa...
  Application Data:
      Buffer: aaa
      Physical: aaa...
      IOUI: aaa...
      Send Error: Reason=aaa Data=aaa
  Reported by: aaa...
```

Example

An example of log report LOST116 follows:

```
MERCURY_MSC     LOST111 SEP16 07:49:48 1400 EXC  SEND ERROR
        Message TID: Node=275, Terminal=260, Device=DTC 103
        Time of Event: 07:49:47.978
        Message Dump:
            ABCD 1CCC 640F 2000 1000 8007 9EOO 0020 8000 8412
            0000 1E00 0002 0000 0200 5100 0000 FD00 FDFD FDFD
            FDFD FDFD FDFD FDFD FDFD FDFD FDFD FDFD
        Application Data:
            Buffer: DS30
            Physical: FDFD FDFD
            IOUI: 2B00 FDFD 1113 FD04
            Send Error: Reason=ROUTE_UNAVAILABLE Data=0000
        Reported by: 0049CD84=IONETUI.CQ03:CMC_OUTPUT+#0144
                     01509170=PPMUI.EM02:DISPATCH_P+#01D0
                     02797110=ISUPA.ED04:ISUP_PHY+#0070
                     00CFE464=TPUI.EB01:DISPATCH+#0024
                     02792138=ISUPA.ED04:ISUP_UPD+#0118
```

LOST116 (continued)

Field descriptions

The following table describes each field in the log report:

Field	Value	Description
EXC	Constant	Identifies the log class (software execution event).
SEND ERROR	Constant	Identifies the log error condition.
Node	Decimal number	Identifies the peripheral internal node number.
Terminal	Decimal number	Identifies the peripheral internal terminal number.
Device	Text	Identifies the peripheral external node name.
Time of Event	Decimal number	Indicates the time of day (format hour:minute:second:fraction) when the event occurred.
Message Dump	Hexadecimal number	Indicates the contents of the message.
Buffer	Text	Indicates the type of software buffer.
Physical	Hexadecimal number	Identifies the routing header.
IOUI	Hexadecimal number	Identifies the network header.
Reason	Text	Indicates additional diagnostic information (character based).
Data	Hexadecimal number	Indicates additional diagnostic information (numeric based).
Reported by	Text	Indicates five-level software traceback.

Action

No immediate action is required as the problem may be transient. Should this log occur more than three times in one minute, collect the active Footprint buffer for MSG class events and contact the next level of support.

Associated OM registers

There are no associated OM registers.

LOST116 (end)

Additional information

A LOST log is generated whenever the I/O system or an application is unable to deliver a message. The discarded message is displayed in the log. The impact of discarding a message depends on the importance of the message. This cannot be determined by the I/O system as it has no understanding of message contents. A LOST log is used to alert the craftsperson to a possible problem (for example, a hardware fault, or bad configuration data).

LOST117

Explanation

LOST117 occurs when an outgoing message is discarded in the outgoing message path. The specific failure reason is displayed in the log.

Format

The log report format for LOST117 is as follows:

```
LOST117 mmmdd hh:mm:ss ssdd EXC aaa
  Message TID: Node=aaa, Terminal=aaa, Device=aaa
  Time of Event: aaa
  Message Dump:
      aaa...
  Application Data:
      Buffer: aaa
      Physical: aaa...
      IOUI: aaa...
      Outgoing Error: Reason=aaa Data=aaa
  Reported by: aaa...
```

Example

An example of log report LOST117 follows:

```
MERCURY_MSC     LOST117 NOV01 07:49:48 1400 EXC  OUTGOING ERROR
        Message TID: Node=275, Terminal=260, Device=DTC 103
        Time of Event: 07:49:47.978
        Message Dump:
            ABCD 1CCC 640F 2000 1000 8007 9EOO 0020 8000 8412
            0000 1E00 0002 0000 0200 5100 0000 FD00 FDFD FDFD
            FDFD FDFD FDFD FDFD FDFD FDFD FDFD FDFD
        Application Data:
            Buffer: DS30
            Physical: FDFD FDFD
            IOUI: 2B00 FDFD 1113 FD04
            Outgoing Error: Reason=BAD_FIQS_RC Data=0000
        Reported by: 024BF4CC=XAIOEH.AA02:HANDLE_M+#04BC
                     01FF0910=XAIOLINK.AV02:XA_OUTPUT_D+#037C
                     02797110=IOLINKUI.BJ03:PRIVATE_+#0070
                     00CFE464=XAIONET.AY03:XA_PRIVA+#0024
                     02792138=XATXMSG.AM03:MSG_TC_H+#0118
```

LOST117 (continued)

Field descriptions

The following table describes each field in the log report:

Field	Value	Description
EXC	Constant	Identifies the log class (software execution event).
OUTGOING ERROR	Constant	Identifies the log error condition.
Node	Decimal number	Identifies the peripheral internal node number.
Terminal	Decimal number	Identifies the peripheral internal terminal number.
Device	Text	Identifies the peripheral external node name.
Time of Event	Decimal number	Indicates the time of day (format hour:minute:second:fraction) when the event occurred.
Message Dump	Hexadecimal number	Indicates the contents of the message.
Buffer	Text	Indicates the type of software buffer.
Physical	Hexadecimal number	Identifies the routing header.
IOUI	Hexadecimal number	Identifies the network header.
Reason	Text	Indicates additional diagnostic information (character based).
Data	Hexadecimal number	Indicates additional diagnostic information (numeric based).
Reported by	Text	Indicates five-level software traceback.

Action

No immediate action is required as the problem may be transient. Should this log occur more than three times in one minute, collect the active Footprint buffer for MSG class events and contact the next level of support.

Associated OM registers

There are no associated OM registers.

LOST117 (end)

Additional information

A LOST log is generated whenever the I/O system or an application is unable to deliver a message. The discarded message is displayed in the log. The impact of discarding a message depends on the importance of the message. This cannot be determined by the I/O system as it has no understanding of message contents. A LOST log is used to alert the craftsperson to a possible problem (for example, a hardware fault, or bad configuration data).

This page is left blank intentionally.

SOS701

Log title

SNTP offset is greater than 500ms.

Explanation

This log is generated if the Network Time Protocol (NTP) is the timing reference for the time-of-day clock, and if the time-of-day clock is more than 500ms ahead of or behind the timing reference.

> ***Note:*** Office parameter SNTP_CLIENT in table OFCENG controls whether the NTP is used as a timing reference for the time-of-day clock. The NTP is used as the reference only in the German market.

An SOS701 log report indicates a TOD Critical alarm. The TOD alarms are visible in the TOD field, at the following MAP level: MAPCI;MTC;APPL;OAMAP.

Action

Use the SETTIMETONTP command to synchronize to the NTP timing reference. For instructions, see “How to check and adjust the XA-Core TOD” in the *XA-Core Maintenance Manual*, 297-8991-510.

Related OM registers

There are no related OM registers.

Additional information

To view this log, use the following commands, starting from the CI MAP level.

CI> LOGUTIL

LOGUTIL> OPEN SOS

This page is left blank intentionally.

SOS702

Log title

SDM has a problem servicing the NTP request.

Explanation

This log is generated if the Network Time Protocol (NTP) is the timing reference for the time-of-day clock, and if there is an indication that the SuperNode Data Manager cannot respond to a query-time or set-time request..

> ***Note:*** Office parameter SNTP_CLIENT in table OFCENG controls whether the NTP is used as a timing reference for the time-of-day clock. The NTP is used as the reference only in the German market.

Any of the following can trigger this log:

- The SDM does not respond to a request for five minutes.
- The SDM does not provide the NTP reference time, thus indicating that it has lost synchronization with the NTP timing reference.
- The SDM issues a series of invalid responses, and the number of such responses exceeds an internal threshold value. Round-trip delays exceeding an internal limit are considered as invalid responses.

The reason text in the log indicates the trigger event.

An SOS702 log report indicates a TOD Major alarm. The TOD alarms are visible in the TOD field, at the following MAP level: MAPCI;MTC;APPL;OAMAP.

Action

Verify the SDM connectivity with the computing module, and verify the NTP server operation at the SDM.

Related OM registers

There are no related OM registers.

Additional information

To view this log, use the following commands, starting from the CI MAP level.

CI> LOGUTIL

LOGUTIL> OPEN SOS

This page is left blank intentionally.

SOS703

Log title

SNTP information log.

Explanation

This log is generated if the Network Time Protocol (NTP) is the timing reference for the time-of-day clock, and if an event occurs that requires an information log.

> ***Note:*** Office parameter SNTP_CLIENT in table OFCENG controls whether the NTP is used as a timing reference for the time-of-day clock. The NTP is used as the reference only in the German market.

Any of the following can trigger this log:

- Successful execution of a query-time or set-time command.
- The offset between the time-of-day and the NTP timing reference is in the range 300ms to 500ms.
- The time-of-day has been adjusted with a leap second.

The reason text in the log indicates the trigger event.

Action

No action is required.

Related OM registers

There are no related OM registers.

Additional information

To view this log, use the following commands, starting from the CI MAP level.

CI> LOGUTIL

LOGUTIL> OPEN SOS

This page is left blank intentionally.

XAC300 LowSM

Explanation

The system generates the Low Shared Memory (LowSM) log report when there is a loss of service of one or more XA-Core shared memory (SM) circuit packs (CP).

The LowSM log report describes the recommended action that operating company personnel can follow to correct the condition. When the condition clears, the system generates the LowSM Condition Cleared log (XAC600) report.

The LowSM log report generates a Card List when the system detects a fault on more than one CP or packlet. The Card List displays other CPs and packlets that operating company personnel need to check as possible sources of the fault identified in the log report.

A LowSM log report indicates one of two alarm levels:

- **LowSM Major alarm**: Shared memory redundancy is lost. XA-Core shared memory is running in Simplex.
- **LowSM Minor alarm:** A shared memory CP is out-of-service (OOS). XA-Core shared memory remains duplicated, but spare memory is not available.

Event type

Fault (FLT)

Format

The format for log XAC300 follows:

XAC300 LowSM (continued)

```
Severity XACnnn mmmdd hh:mm:ssssdd Event Type  Log Title
    IMPACT:  <System Impact Statement>
    DESCRIPTION: State has changed from OldState to NewState by Init. action
    Class:     Type State Site  FL  Row  Bay    Shf/Slt/Pk   EqPEC /Serial
               cccc cccc  cccc  nn  cnn  cccc:nn nn  nns  p ccccnncc/nnnnnnnn
    REASON:  <Reason Statement>
    ACTION:  <Action Statement>
    FAULT RECORD ID: hhhhhhhh
    Check the following card(s) for possible source of fault.
            Weight Type Site FL Row Bay     Shf/Slt/Pk/Dv   EqPEC/Serial
            nnn% cccc cccc nn cnn cccc:nn nn nnc c  n nnnnccnn/cccccccccccc
            nnn% cccc cccc nn cnn cccc:nn nn nnc c  n nnnnccnn/cccccccccccc
             .... ..
            nnn% cccc cccc nn cnn cccc:nn nn nnc c  n nnnnccnn/cccccccccccc
```

Example

An example of log XAC300 follows:

```
**    XAC300 JAN01 17:52:34  0011  FLT   LowSM (Low Shared Memory)
    IMPACT:  Shared Memory redundancy is lost. Running in Simplex.
    DESCRIPTION: State has changed from INSV to SYSB by SYSTEM action.
    CARD:      Type State Site  FL  Row  Bay    Shf/Slt/Pk   EqPEC/Serial
                SM  SysB  HOST  01  A00  DPCC:00  01 17F  NTLX14CA/nnnnnnnnnn
    REASON:  XA-Core fault.
    ACTION:  Check the other card(s) for possible source of fault.
    FAULT RECORD ID: 12345678
    Check the following card(s) for possible source of fault.
            Weight Type Site FL Row Bay     Shf/Slt/Pk/Dv   EqPEC/Serial
            70%  SM    SysB  01 A00 DPCC:00 01/07F      NTLX14CA/nnnnnnnnn
            30%  IOP   IsTb  01 A00 DPCC:00 01/03F      NTLX03BA/nnnnnnnnn
```

XAC300 LowSM (continued)

Field descriptions

The following table explains each of the fields in log XAC300:

Field descriptions for LowSM log (Sheet 1 of 4)

Field	Value	Description
Severity	Two asterisks (**), or one asterisk (*)	Displays the severity of the associated alarm. Two asterisks (**) indicate a major alarm condition. Shared memory redundancy is lost. XA-Core shared memory is running in simplex. One asterisk (*) indicates a minor alarm condition. A shared memory CP is out-of-service (OOS). XA-Core shared memory remains duplicated, but spare memory is not available.
Reportid	XAC300	The Reportid field displays the log group (XAC) and identification number of the log report.
Event Type	FLT	The Event Type field displays the type of event identified in the log report.
Log title	Text string	A text string describing the title of the log report.
IMPACT	Text string	The Impact field describes the impact of the condition to the XA-Core. (This line is generated only if the state change has a negative impact.)
DESCRIPTION	Text string	A text string describing the state change. The DESCRIPTION field contains the following fields: Old State, New State, and Initiator.
OldState	4 characters	A character field identifying the “from” state. Possible values are: SYSB, CBSY, MBSY, ISTB, INSV, UNEQ, and SPLT.
NewState	4 characters	A character field identifying the “to” state. Possible values are: SYSB, CBSY, MBSY, ISTB, INSV, UNEQ, and SPLT.
Initiator (Init)	Up to 12 characters	A character field identifying the initiator of the state change. Possible values are: MANUAL, SYSTEM, RECOVERY, PROVISIONING, CLOCKEVENT, FAULT, SWACT, REX, IMGTST, MSMTCE, SREX, AUDIT, IRM, and CCMT.

XAC300 LowSM (continued)

Field descriptions for LowSM log (Sheet 2 of 4)

Field	Value	Description
Class	4 characters	The class of resource that is involved in the state change. Possible values are: CARD, PORT, LINK, and TOD.
Type	4 characters	A character field identifying the type of CP or packlet identified in the log report. This field, in conjunction with the Class field, identifies the resource involved in the state change. For example, Class Link and Type ETHR identifies an Ethernet link.
State	4 characters	The State field displays the current operational state of the CP or packlet identified in the log report.
Site	4 characters	The Site field displays the site location of the switch that contains the CP or packlet identified in the log report.
Floor	2 digits	The Floor field displays the floor position, within the site, of the CP or packlet identified in the log report.
Row	Alphanumeric: 1 digit followed by 2 characters	The Row field identifies the row position, on the floor, that contains the CP or packlet identified in the log report.
Bay	DPCC:00	The Bay field identifies the bay (frame type and number) that contains the CP or packlet identified in the log report.
Shelf	2 digits	A number identifying the shelf where the CP, packlet, or device is located. Possible values are 0, 1, 2, and 3.
Slot	3 alphanumeric characters	Two digits identifying the slot number and one character identifying the side (front or rear) of the shelf. Possible values for the slot are in the range 1 to 18. Possible values for the side are F and R.
Packlet	1 character (optional)	A character identifying the packlet position (upper or lower). Possible values are U and L.

XAC300 LowSM (continued)

Field descriptions for LowSM log (Sheet 3 of 4)

Field	Value	Description
Device	1 digit (optional)	One digit identifying the number of the device (0 or 1) involved in the state change. This field is displayed only if the Class of the resource involved in the state change is PORT, LINK, or TOD.
EqPEC	9 alphanumeric characters	The EqPEC field identifies the product engineering code (EqPEC) of the CP or packlet identified in the log report. If the device involved in the state change is not a CP or packlet, then the EqPEC displayed is that of the CP or packlet that is hosting the device.
Serial	14 alphanumeric characters	The Serial field identifies the serial number of the CP or packlet identified in the log report. If the device involved in the state change is not a CP or packlet, then the serial number displayed is that of the CP or packlet that is hosting the device.
REASON	Text string (optional)	The Reason field describes the cause of the condition identified in the log report. This field is not displayed if the state change was initiated by the user.
ACTION	Text string (optional)	The Action field displays the recommended action that operating company personnel can follow to correct the condition identified in the log report.
Fault Record Id	8 hexadecimal characters (optional)	A hexadecimal identifier that references an entry in the XA-Core Fault Query Tool database. (This field is displayed only if the condition identified in the log report was caused by a recorded hardware fault.)

XAC300 LowSM (continued)

Field descriptions for LowSM log (Sheet 4 of 4)

Field	Value	Description
Cardlist	Variable field (optional)	The Cardlist field displays other CPs or packlets that operating company personnel need to check as possible sources of the fault identified in the log report. The Cardlist field displays the card or packlet weight (probability, shown as a percentage, that the CP or packlet contains a fault), card type, state, site, floor, row, bay, shelf and slot position, the product engineering code and serial number for each CP or packlet. A cardlist is displayed only if the number of CPs or packlets involved in the fault report was greater than one.

Actions

If the Shared Memory (SM) circuit pack (CP) state is ManB, return the SM CP to service.

If the SM CP state is InSv, check other SM CPs for faults.

If the system is in split mode, take no action. The SM CP returns-to-service when the system exits split mode.

If the SM CP state is not ManB or InSv, and the system is not in split mode, check for a card list in the log report. The card list displays other CPs and packlets that can contain a fault.

XAC300 LowSM (end)

Associated OM registers

XASM

XASSMPXU

XAMSMPXU

XARSMPXU

XASMCRIU

This page is left blank intentionally.

XAC302 LowPE

Explanation

The system generates the Low Processor Element (LowPE) log report when there is a loss of service of one or more XA-Core processor elements (PE).

The LowPE log report describes the recommended action that operating company personnel can follow to correct the condition. When the condition clears, the system generates the LowPE Condition Cleared log (XAC602) report.

The LowPE log report generates a Card List when the system detects a fault on more than one CP or packlet. The Card List displays other CPs and packlets that operating company personnel need to check as possible sources of the fault identified in the log report.

In CSP15, a LowPE log report indicates one of two alarm levels:

- **LowPE Critical Alarm**: The amount of PE capacity that has been lost is so large that all redundant capacity is absent and the XA-Core cannot meet the required processing capacity. In CSP15 this means that more than one PE CP is out of service.
- **LowPE Major Alarm**: The amount of PE capacity that has been lost is so large that all redundant capacity is absent. In CSP15 this means that one PE CP is out of service.

Note: A LowPE minor alarm is not possible in CSP15. Such an alarm indicates that some but not all redundant capacity has been lost. All the PE configurations supported in CSP15 are “+1” configurations. A minor alarm can occur only if the configuration is “+2” or greater.

Event Type

Fault (FLT)

Format

The format for log XAC302 follows:

XAC302 LowPE (continued)

```
Severity XACnnn mmmdd hh:mm:ssssdd Event Type  Log Title
    IMPACT:  <System Impact Statement>
    DESCRIPTION: State has changed from OldState to NewState by Init. action
    Class:     Type State Site  FL  Row  Bay    Shf/Slt/Pk   EqPEC/Serial
               cccc cccc  cccc  nn cnn  cccc:nn  nn nns p ccccnncc/nnnnnnnn
    REASON:  <Reason Statement>
    ACTION:  <Action Statement>
    FAULT RECORD ID: hhhhhhhh
    Check the following card(s) for possible source of fault.
            Weight Type Site FL Row Bay     Shf/Slt/Pk/Dv   EqPEC/Serial
            nnn% cccc cccc nn cnn cccc:nn nn nnc c  n nnnnccnn/cccccccccccc
            nnn% cccc cccc nn cnn cccc:nn nn nnc c  n nnnnccnn/cccccccccccc
             .... ..
            nnn% cccc cccc nn cnn cccc:nn nn nnc c  n nnnnccnn/cccccccccccc
```

Examples

Examples of log XAC302 follow:

```
**    XAC302 OCT22 15:22:28  9700  FLT   LowPE (Low Processor Element)
    IMPACT:  PE count reduced to minimum performance requirements.
    DESCRIPTION: State has changed from INSV to SYSB by SYSTEM action.
    CARD:      Type State Site  FL  Row  Bay    Shf/Slt/Pk  EqPEC/Serial
                PE  InSv  HOST  01  A00  DPCC:00  01 16F  NTLX02BA/nnnnnnnnnn
    REASON:  XA-Core fault.
    ACTION:  Contact next level of support.
    FAULT RECORD ID: 12345678
```

```
**    XAC302 OCT26 17:52:34  9200  FLT   LowPE (Low Processor Element)
    IMPACT:  PE count reduced to minimum performance requirements.
    DESCRIPTION: State has changed from INSV to SYSB by SYSTEM action.
    CARD:      Type State Site  FL  Row  Bay    Shf/Slt/Pk  EqPEC/Serial
                PE  InSv  HOST  01  A00  DPCC:00  01 16F  NTLX02BA/nnnnnnnnnn
    REASON:  XA-Core fault.
    ACTION:  Contact the next level of support.
    FAULT RECORD ID: 12345678
    Check the following card(s) for possible source of fault.
            Weight Type Site FL Row Bay     Shf/Slt/Pk/Dv   EqPEC/Serial
            70%  PE   SysB 01 A00 DPCC:00 01 16F      NTLX02AA/nnnnnnnnn
            30%  IOP  IsTb 01 A00 DPCC:00 01/12F      NTLX03BA/nnnnnnnnn
```

XAC302 LowPE (continued)

Field descriptions

The following table explains each of the fields in log XAC302:

Field descriptions for LowPE log (Sheet 1 of 4)

Field	Value	Description
Severity	Three asterisks (***) or two asterisks (**)	Displays the severity of the associated alarm. Three asterisks indicate a critical LowPE alarm condition. The amount of PE capacity that has been lost is so large that all redundant capacity is absent and the XA-Core cannot meet the required processing capacity. In CSP15 this means that more than one PE CP is out of service. Two asterisks indicate a LowPE major alarm condition. All the redundant capacity has been lost. In CSP15 this means that one PE CP is out of service.
Reportid	XAC302	The Reportid field displays the log group (XAC) and identification number of the log report.
Event Type	FLT	The Event Type field displays the type of event identified in the log report.
Log title	Text string	A text string describing the title of the log report.
IMPACT	Text string	The Impact field describes the impact of the condition to the XA-Core. (This line is generated only if the state change has a negative impact.)
DESCRIPTION	Text string	A text string describing the state change. The DESCRIPTION field contains the following fields: Old State, New State, and Initiator.
OldState	4 characters	A character field identifying the “from” state. Possible values are: SYSB, CBSY, MBSY, ISTB, INSV, UNEQ, and SPLT.
NewState	4 characters	A character field identifying the “to” state. Possible values are: SYSB, CBSY, MBSY, ISTB, INSV, UNEQ, and SPLT.
Initiator (Init)	Up to 12 characters	A character field identifying the initiator of the state change. Possible values are: MANUAL, SYSTEM, RECOVERY, PROVISIONING, CLOCKEVENT, FAULT, SWACT, REX, IMGTST, MSMTCE, SREX, AUDIT, IRM, and CCMT.

XAC302 LowPE (continued)

Field descriptions for LowPE log (Sheet 2 of 4)

Field	Value	Description
Class	4 characters	The class of resource that is involved in the state change. Possible values are: CARD, PORT, LINK, and TOD.
Type	4 characters	A character field identifying the type of CP or packlet identified in the log report. This field, in conjunction with the Class field, identifies the resource involved in the state change. For example, Class Link and Type ETHR identifies an Ethernet link.
State	4 characters	The State field displays the current operational state of the CP or packlet identified in the log report.
Site	4 characters	The Site field displays the site location of the switch that contains the CP or packlet identified in the log report.
Floor	2 digits	The Floor field displays the floor position, within the site, of the CP or packlet identified in the log report.
Row	Alphanumeric: 1 digit followed by 2 characters	The Row field identifies the row position, on the floor, that contains the CP or packlet identified in the log report.
Bay	DPCC:00	The Bay field identifies the bay (frame type and number) that contains the CP or packlet identified in the log report.
Shelf	2 digits	A number identifying the shelf where the CP, packlet, or device is located. Possible values are 0, 1, 2, and 3.
Slot	3 alphanumeric characters	Two digits identifying the slot number and one character identifying the side (front or rear) of the shelf. Possible values for the slot are in the range 1 to 18. Possible values for the side are F and R.
Packlet	1 character (optional)	A character identifying the packlet position (upper or lower). Possible values are U and L.

XAC302 LowPE (continued)

Field descriptions for LowPE log (Sheet 3 of 4)

Field	Value	Description
Device	1 digit (optional)	One digit identifying the number of the device (0 or 1) involved in the state change. This field is displayed only if the Class of the resource involved in the state change is PORT, LINK, or TOD.
EqPEC	9 alphanumeric characters	The EqPEC field identifies the product engineering code (EqPEC) of the CP or packlet identified in the log report. If the device involved in the state change is not a CP or packlet, then the EqPEC displayed is that of the CP or packlet that is hosting the device.
Serial	14 alphanumeric characters	The Serial field identifies the serial number of the CP or packlet identified in the log report. If the device involved in the state change is not a CP or packlet, then the serial number displayed is that of the CP or packlet that is hosting the device.
REASON	Text string (optional)	The Reason field describes the cause of the condition identified in the log report. This field is not displayed if the state change was initiated by the user.
ACTION	Text string (optional)	The Action field displays the recommended action that operating company personnel can follow to correct the condition identified in the log report.
Fault Record Id	8 hexadecimal characters (optional)	A hexadecimal identifier that references an entry in the XA-Core Fault Query Tool database. (This field is displayed only if the condition identified in the log report was caused by a recorded hardware fault.)

XAC302 LowPE (continued)

Field descriptions for LowPE log (Sheet 4 of 4)

Field	Value	Description
Cardlist	Variable field (optional)	The Cardlist field displays other CPs or packlets that operating company personnel need to check as possible sources of the fault identified in the log report. The Cardlist field displays the card or packlet weight (probability, shown as a percentage, that the CP or packlet contains a fault), card type, state, site, floor, row, bay, shelf and slot position, the product engineering code and serial number for each CP or packlet. A cardlist is displayed only if the number of CPs or packlets involved in the fault report was greater than one.

Reason

The following message has been added in CSP15. The reason field can display the message “Maximum allowed number of PE cards already in-service,” to explain the failure of an RTS command to put a PE CP into service.

Action

If the processor element (PE) circuit pack (CP) state is ManB, return-to-service (RTS) the PE circuit pack.

If the PE CP state is InSv, check other PE CPs for faults.

If the XA-Core system is in split mode, take no action. The PE CP will return-to-service when the system exits split mode.

If the PE CP state is not ManB or InSv, and the system is not in split mode, check for a card list in the log. The card list displays other CPs and packlets that can contain a fault.

XAC302 LowPE (end)

Associated OM registers

XAPE

XAPEMAJU

XAPECRIU

XARXPE

This page is left blank intentionally.

XAC303 MScomm (Message Switch Communication)

Explanation

The system generates the Message Switch Communication (MScomm) log report when any of the following conditions occur:

- There is a loss of communication between the XA-Core and the message switch (MS).
- There is a loss of CMIC link redundancy.
- There is a partial loss CMIC link redundancy.

The MScomm log report indicates the recommended action that operating company personnel can follow to correct the condition. When the condition clears, the system generates the MScomm Alarm Cleared log (XAC603) report.

The MScomm log report generates a Card List when the system detects a fault on more than one CP or packlet. The Card List displays other CPs and packlets that operating company personnel need to check as possible sources of the fault identified in the log report.

A MScomm log indicates one of three alarm levels:

- **MScomm Critical alarm:** There is no communication between the XA-Core and the MS. The CMIC hardware in the XA-Core (HCMIC circuit packs or OC-3 two port interface packlets), the physical links, or the MS cannot provide communication service.
- **MScomm Major alarm:** There is a loss of CMIC link redundancy between the XA-Core and the MS.
- **MScomm Minor alarm:** There is a partial loss of CMIC link redundancy between the XA-Core and the MS.

Event Type

Fault (FLT)

XAC303 MScomm (Message Switch Communication) (continued)

Format

The format for log XAC303 follows:

```
Severity XACnnn mmmdd hh:mm:ssssdd Event Type  Log Title
    IMPACT:  <System Impact Statement>
    DESCRIPTION: State has changed from OldState to NewState by Init. action
    Class:     Type State Site  FL  Row  Bay    Shf/Slt/Pk   EqPEC/Serial
               cccc cccc  cccc  nn  cnn  cccc:nn nn nns  p ccccnncc/nnnnnnnn
    REASON:  <Reason Statement>
    ACTION:  <Action Statement>
    FAULT RECORD ID: hhhhhhhh
    Check the following card(s) for possible source of fault.
            Weight Type Site FL Row Bay     Shf/Slt/Pk/Dv   EqPEC/Serial
            nnn% cccc cccc nn cnn cccc:nn nn nnc c  n nnnnccnn/cccccccccccc
            nnn% cccc cccc nn cnn cccc:nn nn nnc c  n nnnnccnn/cccccccccccc
             .... ..
            nnn% cccc cccc nn cnn cccc:nn nn nnc c  n nnnnccnn/cccccccccccc
```

Example

An example of log XAC303 follows:

```
**    XAC303 OCT27 15:22:28  1800  FLT MScomm (Message Switch Communication)
    IMPACT:  1 of 4 CMIC Links on XA-Core are in-service.
    DESCRIPTION: State has changed from INSV to SYSB by SYSTEM action.
    LINK:      Type State Site  FL  Row  Bay     Shf/Slt/Pk  EqPEC/Serial
                CMICInSv  HOST  01  A00  DPCC:00  00 04 R 0 NTLX05AA/nnnnnnnnnn
    REASON:  XA-Core fault.
    ACTION:  Check integrity of link(s), and state of MS ports.
    FAULT RECORD ID: 12345678
```

XAC303 MScomm (Message Switch Communication) (continued)

Field descriptions

The following table explains each of the fields in log XAC303:

Field descriptions for MScomm (Message Switch Communication) log (Sheet 1 of 4)

Field	Value	Description
Severity	Three asterisks (***) or two asterisks (**) or one asterisk (*)	Displays the severity of the associated alarm. Three asterisks indicate a critical alarm condition. There is no communication between the XA-Core and the Message Switch (MS). Two asterisks indicate a major alarm condition. There is a loss of OC-3 two-port interface packlet (CMIC packlet) link redundancy between the XA-Core and the MS. One asterisk indicates a minor alarm condition. There is a partial loss of OC-3 two-port interface packlet link redundancy between the XA-Core and the MS.
Reportid	XAC303	The Reportid field displays the log group (XAC) and identification number of the log report.
Event Type	FLT	The Event Type field displays the type of event identified in the log report.
Log title	Text string	A text string describing the title of the log report.
IMPACT	Text string	The Impact field describes the impact of the condition to the XA-Core. (This line is generated only if the state change has a negative impact.)
DESCRIPTION	Text string	A text string describing the state change. The DESCRIPTION field contains the following fields: Old State, New State, and Initiator.
OldState	4 characters	A character field identifying the “from” state. Possible values are: SYSB, CBSY, MBSY, ISTB, INSV, UNEQ, and SPLT.
NewState	4 characters	A character field identifying the “to” state. Possible values are: SYSB, CBSY, MBSY, ISTB, INSV, UNEQ, and SPLT.
Initiator (Init)	Up to 12 characters	A character field identifying the initiator of the state change. Possible values are: MANUAL, SYSTEM, RECOVERY, PROVISIONING, CLOCKEVENT, FAULT, SWACT, REX, IMGTST, MSMTCE, SREX, AUDIT, IRM, and CCMT.

XAC303 MScomm (Message Switch Communication) (continued)

Field descriptions for MScomm (Message Switch Communication) log (Sheet 2 of 4)

Field	Value	Description
Class	4 characters	The class of resource that is involved in the state change. Possible values are: CARD, PORT, LINK, and TOD.
Type	4 characters	A character field identifying the type of CP or packlet identified in the log report. This field, in conjunction with the Class field, identifies the resource involved in the state change. For example, Class Link and Type ETHR identifies an Ethernet link.
State	4 characters	The State field displays the current operational state of the CP or packlet identified in the log report.
Site	4 characters	The Site field displays the site location of the switch that contains the CP or packlet identified in the log report.
Floor	2 digits	The Floor field displays the floor position, within the site, of the CP or packlet identified in the log report.
Row	Alphanumeric: 1 digit followed by 2 characters	The Row field identifies the row position, on the floor, that contains the CP or packlet identified in the log report.
Bay	DPCC:00	The Bay field identifies the bay (frame type and number) that contains the CP or packlet identified in the log report.
Shelf	2 digits	A number identifying the shelf where the CP, packlet, or device is located. Possible values are 0, 1, 2, and 3.
Slot	3 alphanumeric characters	Two digits identifying the slot number and one character identifying the side (front or rear) of the shelf. Possible values for the slot are in the range 1 to 18. Possible values for the side are F and R.
Packlet	1 character (optional)	If the CMIC links are supported by OC-3 two port interface packlets, this is a character identifying the packlet position (upper or lower). Possible values are U and L. If the links are supported by HCMIC circuit packs, the field is blank.

XAC303 MScomm (Message Switch Communication) (continued)

Field descriptions for MScomm (Message Switch Communication) log (Sheet 3 of 4)

Field	Value	Description
Device	1 digit (optional)	One digit identifying the number of the device (0 or 1) involved in the state change. This field is displayed only if the Class of the resource involved in the state change is PORT, LINK, or TOD.
EqPEC	9 alphanumeric characters	The EqPEC field identifies the product engineering code (EqPEC) of the CP or packlet identified in the log report. If the device involved in the state change is not a CP or packlet, then the EqPEC displayed is that of the CP or packlet that is hosting the device.
Serial	14 alphanumeric characters	The Serial field identifies the serial number of the CP or packlet identified in the log report. If the device involved in the state change is not a CP or packlet, then the serial number displayed is that of the CP or packlet that is hosting the device.
REASON	Text string (optional)	The Reason field describes the cause of the condition identified in the log report. This field is not displayed if the state change was initiated by the user.
ACTION	Text string (optional)	The Action field displays the recommended action that operating company personnel can follow to correct the condition identified in the log report.
Fault Record Id	8 hexadecimal characters (optional)	A hexadecimal identifier that references an entry in the XA-Core Fault Query Tool database. (This field is displayed only if the condition identified in the log report was caused by a recorded hardware fault.)

XAC303 MScomm (Message Switch Communication) (continued)

Field descriptions for MScomm (Message Switch Communication) log (Sheet 4 of 4)

Field	Value	Description
Cardlist	Variable field (optional)	The Cardlist field displays other CPs or packlets that operating company personnel need to check as possible sources of the fault identified in the log report. The Cardlist field displays the card or packlet weight (probability, shown as a percentage, that the CP or packlet contains a fault), card type, state, site, floor, row, bay, shelf and slot position, the product engineering code and serial number for each CP or packlet. A cardlist is displayed only if the number of CPs or packlets involved in the fault report was greater than one.

Action

If the CMIC hardware in the XA-Core shelf (HCMIC circuit pack or OC-3 two port interface packlet) is ManB, attempt to return the it to service. Replace the circuit pack or packlet if faulty.

If the CMIC packlet state is CBsy because an IOP CP is out-of-service, ensure the identified input/output processor (IOP) circuit pack is in-service.

If the CMIC hardware in the XA-Core shelf (HCMIC circuit pack or OC-3 two port interface packlet) is SysB, attempt to return it to service. Replace the circuit pack or packlet if faulty.

If the CMIC hardware in the XA-Core shelf (HCMIC circuit pack or OC-3 two port interface packlet) is in-service (InSv) or in-service-trouble (IsTb), check integrity of link(s), and the state of MS ports.

If the XA-Core system is in split mode, take no action. The CMIC hardware and links will return-to-service when the system exits split mode.

If the state of the CMIC hardware in the XA-Core shelf (HCMIC circuit pack or OC-3 two port interface packlet) is unknown and a state change has occurred on the CMIC hardware, link, or MS port, ensure CMIC hardware and MS Port are in-service. Check the integrity of the links.

XAC303 MScomm (Message Switch Communication) (end)

Associated OM registers

XCMIC

XCMICPRT

XCMICLNK

XAIOP

XARXIO

This page is left blank intentionally.

XAC304 TOD (Time of Day Clock)

Explanation

The system uses time-of-day (TOD) clocks to generate billing information and produce log reports. The TODs are in the CMIC hardware in the XA-Core shelf, that is, in the HCMIC circuit packs or in the OC-3 two port interface packlets. Each HCMIC circuit pack has two TODs. Each OC-3 two-port interface packlet (CMIC packlet) has one TOD.

The system generates the Time-of-Day (TOD) log report when any of the following conditions occur:

- There is a loss in service of TOD clocks on the message switch (MS).
- There is a loss in service of TOD clocks on the XA-Core.
- There is a loss of redundancy of TOD clocks on the XA-Core.

The TOD log report indicates the recommended action that operating company personnel can follow to correct the condition. When the condition clears, the system generates the TOD Alarm Cleared log (XAC604) report.

The TOD log report generates a Card List when the system detects a fault on more than one CP or packlet. The Card List displays other CPs and packlets that operating company personnel need to check as possible sources of the fault identified in the log report.

A TOD log indicates one of three alarm levels:

- TOD critical alarm
- TOD major alarm
- TOD minor alarm

For explanations of the meanings of the TOD alarms, see the introductory sections of the procedures for clearing those alarms. The procedures are in the *XA-Core Maintenance Manual*, 297-8991-510, in the chapter titled “Understanding the alarm system”.

Event Type

Fault (FLT)

XAC304 TOD (Time of Day Clock) (continued)

Format

The format for log XAC304 follows:

```
Severity XACnnn mmmdd hh:mm:ssssdd Event Type  Log Title
    IMPACT:  <System Impact Statement>
    DESCRIPTION: State has changed from OldState to NewState by Init. action
    Class:     Type State Site  FL  Row  Bay    Shf/Slt/Pk   EqPEC/Serial
               cccc cccc  cccc  nn  cnn  cccc:nn nn nns  p ccccnncc/nnnnnnnn
    REASON:  <Reason Statement>
    ACTION:  <Action Statement>
    FAULT RECORD ID: hhhhhhhh
    Check the following card(s) for possible source of fault.
            Weight Type Site FL Row Bay     Shf/Slt/Pk/Dv   EqPEC/Serial
            nnn% cccc cccc nn cnn cccc:nn nn nnc c  n nnnnccnn/cccccccccccc
            nnn% cccc cccc nn cnn cccc:nn nn nnc c  n nnnnccnn/cccccccccccc
             .... ..
            nnn% cccc cccc nn cnn cccc:nn nn nnc c  n nnnnccnn/cccccccccccc
```

Example

An example of log XAC304 follows:

```
**    XAC304 MAR01 15:22:28  6800  FLT   TOD (Time of Day Clock)
    IMPACT:  XAC TOD can receive clock update from 1 out of 2 MS TODS.
    DESCRIPTION: State has changed from INSV to SYSB by SYSTEM action.
    TOD:       Type State Site  FL  Row  Bay    Shf/Slt/Pk   EqPEC/Serial
                CMICInSv  HOST  01  A00  DPCC:00 00 04R L 0 NTLX05AA/nnnnnnnnnn
    REASON:  At least one MS TOD is not providing clock update.
    ACTION:  Ensure that MS TODs are InSv.
    FAULT RECORD ID: 12345678
```

XAC304 TOD (Time of Day Clock) (continued)

Field descriptions

The following table explains each of the fields in log XAC304:

Field descriptions for TOD log (Sheet 1 of 4)

Field	Value	Description
Severity	Three asterisks (***), two asterisks (**), or one asterisk (*)	Displays the severity of the associated alarm. Three asterisks (***) indicate a critical alarm condition. Four out of four TOD clocks on the message switch (MS) are out-of-service (OOS), or two out of two TODs on the XA-Core are OOS. Two asterisks (**) indicate a major alarm condition. There is a loss of redundancy of TOD clocks on the XA-Core. One TOD clock on the XA-Core is OOS. One asterisk (*) indicates a minor alarm condition. A TOD clock on the MS is OOS.
Reportid	XAC304	The Reportid field displays the log group (XAC) and identification number of the log report.
Event Type	FLT	The Event Type field displays the type of event identified in the log report.
Log title	Text string	A text string describing the title of the log report.
IMPACT	Text string	The Impact field describes the impact of the condition to the XA-Core. (This line is generated only if the state change has a negative impact.)
DESCRIPTION	Text string	A text string describing the state change. The DESCRIPTION field contains the following fields: Old State, New State, and Initiator.
OldState	4 characters	A character field identifying the “from” state. Possible values are: SYSB, CBSY, MBSY, ISTB, INSV, UNEQ, and SPLT.
NewState	4 characters	A character field identifying the “to” state. Possible values are: SYSB, CBSY, MBSY, ISTB, INSV, UNEQ, and SPLT.

XAC304 TOD (Time of Day Clock) (continued)

Field descriptions for TOD log (Sheet 2 of 4)

Field	Value	Description
Initiator (Init)	Up to 12 characters	A character field identifying the initiator of the state change. Possible values are: MANUAL, SYSTEM, RECOVERY, PROVISIONING, CLOCKEVENT, FAULT, SWACT, REX, IMGTST, MSMTCE, SREX, AUDIT, IRM, and CCMT.
Class	4 characters	The class of resource that is involved in the state change. Possible values are: CARD, PORT, LINK, and TOD.
Type	4 characters	A character field identifying the type of CP or packlet identified in the log report. This field, in conjunction with the Class field, identifies the resource involved in the state change. For example, Class Link and Type ETHR identifies an Ethernet link.
State	4 characters	The State field displays the current operational state of the CP or packlet identified in the log report.
Site	4 characters	The Site field displays the site location of the switch that contains the CP or packlet identified in the log report.
Floor	2 digits	The Floor field displays the floor position, within the site, of the CP or packlet identified in the log report.
Row	Alphanumeric: 1 digit followed by 2 characters	The Row field identifies the row position, on the floor, that contains the CP or packlet identified in the log report.
Bay	DPCC:00	The Bay field identifies the bay (frame type and number) that contains the CP or packlet identified in the log report.
Shelf	2 digits	A number identifying the shelf where the CP, packlet, or device is located. Possible values are 0, 1, 2, and 3.

XAC304 TOD (Time of Day Clock) (continued)

Field descriptions for TOD log (Sheet 3 of 4)

Field	Value	Description
Slot	3 alphanumeric characters	Two digits identifying the slot number and one character identifying the side (front or rear) of the shelf. Possible values for the slot are in the range 1 to 18. Possible values for the side are F and R.
Packlet	1 character (optional)	If the CMIC links are supported by OC-3 two port interface packlets, this is a character identifying the packlet position (upper or lower). Possible values are U and L. If the links are supported by HCMIC circuit packs, the field is blank.
Device	1 digit (optional)	One digit identifying the number of the device (0 or 1) involved in the state change. This field is displayed only if the Class of the resource involved in the state change is PORT, LINK, or TOD.
EqPEC	9 alphanumeric characters	The EqPEC field identifies the product engineering code (EqPEC) of the CP or packlet identified in the log report. If the device involved in the state change is not a CP or packlet, then the EqPEC displayed is that of the CP or packlet that is hosting the device.
Serial	14 alphanumeric characters	The Serial field identifies the serial number of the CP or packlet identified in the log report. If the device involved in the state change is not a CP or packlet, then the serial number displayed is that of the CP or packlet that is hosting the device.
REASON	Text string (optional)	The Reason field describes the cause of the condition identified in the log report. This field is not displayed if the state change was initiated by the user.
ACTION	Text string (optional)	The Action field displays the recommended action that operating company personnel can follow to correct the condition identified in the log report.

XAC304 TOD (Time of Day Clock) (continued)

Field descriptions for TOD log (Sheet 4 of 4)

Field	Value	Description
Fault Record Id	8 hexadecimal characters (optional)	A hexadecimal identifier that references an entry in the XA-Core Fault Query Tool database. (This field is displayed only if the condition identified in the log report was caused by a recorded hardware fault.)
Cardlist	Variable field (optional)	The Cardlist field displays other CPs or packlets that operating company personnel need to check as possible sources of the fault identified in the log report. The Cardlist field displays the card or packlet weight (probability, shown as a percentage, that the CP or packlet contains a fault), card type, state, site, floor, row, bay, shelf and slot position, the product engineering code and serial number for each CP or packlet. A cardlist is displayed only if the number of CPs or packlets involved in the fault report was greater than one.

Action

If a CMIC packlet state is CBsy, return the input/output processor (IOP) circuit pack (CP) to service, or replace the IOP CP if faulty.

If the state of an item of CMIC hardware on the XA-Core shelf (an HCMIC circuit pack or a CMIC packlet) is ManB or SysB, return the item of hardware to service, or replace it if faulty.

If the state of the CMIC hardware on the XA-Core shelf (HCMIC circuit packs or CMIC packlets) is InSv or IsTb, and the XA-Core TOD state is CBsy, ensure that the links to the MS are in-service.

If the state of the CMIC hardware on the XA-Core shelf (HCMIC circuit packs or CMIC packlets) is InSv or IsTb, and the XA-Core TOD state is InSv, or IsTb, ensure that the MS TODs are InSv.

If the state of the CMIC hardware on the XA-Core shelf (HCMIC circuit packs or CMIC packlets) is InSv, or IsTb, and the XA-Core TOD state is ManB, check the MS TOD(s) and the XA-Core TOD and link.

XAC304 TOD (Time of Day Clock) (end)

If the state of the CMIC hardware on the XA-Core shelf (HCMIC circuit packs or CMIC packlets) is InSv, or IsTb, and the XA-Core TOD state is SysB or not available, check the MS TOD (s) and the XA-Core TOD and link integrity to isolate the problem.

If the state of the CMIC hardware on the XA-Core shelf (HCMIC circuit packs or CMIC packlets) is unknown, and the XA-Core TOD state is CBsy, ensure that the CMIC hardware is InSv. If the CMIC hardware is a CMIC packlet, ensure that the IOP circuit pack is also InSv. Also ensure that the links to the MS are InSv.

If the state of the CMIC hardware on the XA-Core shelf (HCMIC circuit packs or CMIC packlets) is unknown, and the XA-Core TOD state is InSv or IsTb, ensure that the MS TODs are InSv.

If state of the CMIC hardware on the XA-Core shelf (HCMIC circuit packs or CMIC packlets) is unknown, and the XA-Core TOD state is ManB, ensure that the MS TODs are InSv.

If the state of the CMIC hardware on the XA-Core shelf (HCMIC circuit packs or CMIC packlets) is unknown, and the XA-Core TOD state is SysB or unknown, check the MS TOD (s), and the XA-Core TOD and link integrity to isolate the problem.

Associated OM registers

XAIOP

XCMIC

XCMICPRT

XCMICLNK

This page is left blank intentionally.

XAC305 RTIF (Reset Terminal Interface)

Explanation

The system generates the Reset Terminal Interface (RTIF) log report when there is a loss in service of RTIF local or remote ports.

The RTIF log report indicates the recommended action that operating company personnel can follow to correct the condition. When the condition clears, the system generates the RTIF Alarm Cleared log (XAC605) report.

The RTIF log report generates a Card List when the system detects a fault on more than one CP or packlet. The Card List displays other CPs and packlets that operating company personnel need to check as possible sources of the fault identified in the log report.

An RTIF log report indicates one of three alarm levels:

- RTIF critical alarm
- RTIF major alarm
- RTIF minor alarm

For explanations of the meanings of the RTIF alarms, see the introductory sections of the procedures for clearing those alarms. The procedures are in the *XA-Core Maintenance Manual*, 297-8991-510, in the chapter titled “Understanding the alarm system”.

Event Type

Fault (FLT)

Format

The format for log XAC305 follows:

XAC305 RTIF (Reset Terminal Interface) (continued)

```
Severity XACnnn mmmdd hh:mm:ssssdd Event Type  Log Title
    IMPACT:  <System Impact Statement>
    DESCRIPTION: State has changed from OldState to NewState by Init. action
    Class:     Type State Site  FL  Row  Bay    Shf/Slt/Pk   EqPEC/Serial
               cccc cccc  cccc  nn cnn  cccc:nn nn nns  p ccccnncc/nnnnnnnn
    REASON:  <Reason Statement>
    ACTION:  <Action Statement>
    FAULT RECORD ID: hhhhhhhh
    Check the following card(s) for possible source of fault.
            Weight Type Site FL Row Bay     Shf/Slt/Pk/Dv   EqPEC/Serial
            nnn% cccc cccc nn cnn cccc:nn nn nnc c  n nnnnccnn/cccccccccccc
            nnn% cccc cccc nn cnn cccc:nn nn nnc c  n nnnnccnn/cccccccccccc
             .... ..
            nnn% cccc cccc nn cnn cccc:nn nn nnc c  n nnnnccnn/cccccccccccc
```

Example

An example of log XAC305 follows:

```
***   XAC305 OCT27 15:22:28  1800  RTIF  (Reset Terminal Interface)
    IMPACT:  n of n RTIF remote ports required on XA-Core are in-service.
    DESCRIPTION: State has changed from INSV to SYSB by SYSTEM action.
    CARD:      Type State Site  FL  Row  Bay    Shf/Slot/Pk  EqPEC/Serial
                RTIFCBsy  HOST  01  A00  DPCC:00  01 15R L NTLX05AA/nnnnnnnnnn
    REASON:  RTIF packlet is CBsy due to out of service IOP.
    ACTION:  Ensure IOP card is in-service.
    FAULT RECORD ID: 12345678
```

XAC305 RTIF (Reset Terminal Interface) (continued)

Field descriptions

The following table explains each of the fields in log XAC305:

Field descriptions for RTIF log (Sheet 1 of 4)

Field	Value	Description
Severity	Three asterisks (***), two asterisks (**), or one asterisk (*)	Displays the severity of the associated alarm. Three asterisks (***) indicate a critical alarm. Both RTIF local or remote ports are out-of-service (OOS). Two asterisks (**) indicates a major alarm. One RTIF local port is OOS or Both RTIF remote ports are OOS (and operating company personnel have set office parameter REMTERMEQP to true). One asterisk (*) indicates a minor alarm. One RTIF remote port is OOS (and operating company personnel have set office parameter REMTERMEQP to true).
Reportid	XAC305	The Reportid field displays the log group (XAC) and identification number of the log report.
Event Type	FLT	The Event Type field displays the type of event identified in the log report.
Log title	Text string	A text string describing the title of the log report.
IMPACT	Text string	The Impact field describes the impact of the condition to the XA-Core. (This line is generated only if the state change has a negative impact.)
DESCRIPTION	Text string	A text string describing the state change. The DESCRIPTION field contains the following fields: Old State, New State, and Initiator.
OldState	4 characters	A character field identifying the “from” state. Possible values are: SYSB, CBSY, MBSY, ISTB, INSV, UNEQ, and SPLT.
NewState	4 characters	A character field identifying the “to” state. Possible values are: SYSB, CBSY, MBSY, ISTB, INSV, UNEQ, and SPLT.

XAC305 RTIF (Reset Terminal Interface) (continued)

Field descriptions for RTIF log (Sheet 2 of 4)

Field	Value	Description
Initiator (Init)	Up to 12 characters	A character field identifying the initiator of the state change. Possible values are: MANUAL, SYSTEM, RECOVERY, PROVISIONING, CLOCKEVENT, FAULT, SWACT, REX, IMGTST, MSMTCE, SREX, AUDIT, IRM, and CCMT.
Class	4 characters	The class of resource that is involved in the state change. Possible values are: CARD, PORT, LINK, and TOD.
Type	4 characters	A character field identifying the type of CP or packlet identified in the log report. This field, in conjunction with the Class field, identifies the resource involved in the state change. For example, Class Link and Type ETHR identifies an Ethernet link.
State	4 characters	The State field displays the current operational state of the CP or packlet identified in the log report.
Site	4 characters	The Site field displays the site location of the switch that contains the CP or packlet identified in the log report.
Floor	2 digits	The Floor field displays the floor position, within the site, of the CP or packlet identified in the log report.
Row	Alphanumeric: 1 digit followed by 2 characters	The Row field identifies the row position, on the floor, that contains the CP or packlet identified in the log report.
Bay	DPCC:00	The Bay field identifies the bay (frame type and number) that contains the CP or packlet identified in the log report.
Shelf	2 digits	A number identifying the shelf where the CP, packlet, or device is located. Possible values are 0, 1, 2, and 3.

XAC305 RTIF (Reset Terminal Interface) (continued)

Field descriptions for RTIF log (Sheet 3 of 4)

Field	Value	Description
Slot	3 alphanumeric characters	Two digits identifying the slot number and one character identifying the side (front or rear) of the shelf. Possible values for the slot are in the range 1 to 18. Possible values for the side are F and R.
Packlet	1 character (optional)	If the RTIF links are supported by RTIF packlets, this is a character identifying the packlet position (upper or lower). Possible values are U and L. If the links are supported y HCMIC circuit packs, the field is blank.
Device	1 digit (optional)	One digit identifying the number of the device (0 or 1) involved in the state change. This field is displayed only if the Class of the resource involved in the state change is PORT, LINK, or TOD.
EqPEC	9 alphanumeric characters	The EqPEC field identifies the product engineering code (EqPEC) of the CP or packlet identified in the log report. If the device involved in the state change is not a CP or packlet, then the EqPEC displayed is that of the CP or packlet that is hosting the device.
Serial	14 alphanumeric characters	The Serial field identifies the serial number of the CP or packlet identified in the log report. If the device involved in the state change is not a CP or packlet, then the serial number displayed is that of the CP or packlet that is hosting the device.
REASON	Text string (optional)	The Reason field describes the cause of the condition identified in the log report. This field is not displayed if the state change was initiated by the user.
ACTION	Text string (optional)	The Action field displays the recommended action that operating company personnel can follow to correct the condition identified in the log report.

XAC305 RTIF (Reset Terminal Interface) (continued)

Field descriptions for RTIF log (Sheet 4 of 4)

Field	Value	Description
Fault Record Id	8 hexadecimal characters (optional)	A hexadecimal identifier that references an entry in the XA-Core Fault Query Tool database. (This field is displayed only if the condition identified in the log report was caused by a recorded hardware fault.)
Cardlist	Variable field (optional)	The Cardlist field displays other CPs or packlets that operating company personnel need to check as possible sources of the fault identified in the log report. The Cardlist field displays the card or packlet weight (probability, shown as a percentage, that the CP or packlet contains a fault), card type, state, site, floor, row, bay, shelf and slot position, the product engineering code and serial number for each CP or packlet. A cardlist is displayed only if the number of CPs or packlets involved in the fault report was greater than one.

Action

If the hardware supporting the RTIF link (an HCMIC circuit pack or an RTIF packlet) is in the ManB state, attempt to return it to service. Replace if faulty.

If the RTIF packlet state is CBsy, ensure the input/output processor (IOP) circuit pack (CP) is in-service.

If the hardware supporting the RTIF link (an HCMIC circuit pack or an RTIF packlet) is in the SysB state, attempt to return the it to service. Replace if faulty.

If the hardware supporting the RTIF link (an HCMIC circuit pack or an RTIF packlet) is in the InSv state or the IsTb state, test any out-of-service ports and check the integrity of cables and terminal connections. Replace the circuit pack or packlet, or the cables, if faulty.

If the XA-Core system is in split mode, take no action. The RTIF hardware will return-to-service when split mode is exited.

XAC305 RTIF (Reset Terminal Interface) (end)

If the state of the hardware supporting the RTIF link (an HCMIC circuit pack or an RTIF packlet) is unknown, and the RTIF local or remote port state is ManB, attempt to return the ManB port to service.

If the state of the hardware supporting the RTIF link (an HCMIC circuit pack or an RTIF packlet) is unknown, and the RTIF local or remote port state is SysB, replace the circuit pack or packlet if faulty.

If the state of the hardware supporting the RTIF link (an HCMIC circuit pack or an RTIF packlet) is unknown, and the RTIF local or remote port state is CBsy,

- if the RTIF hardware is an RTIF packlet, ensure that the packlet and IOP CP are InSv
- if the RTIF hardware is an HCMIC CP, ensure that the CP is InSv

If the state of the hardware supporting the RTIF link (an HCMIC circuit pack or an RTIF packlet) is unknown,, and the RTIF local and remote state is unknown,

- if the RTIF hardware is an RTIF packlet, ensure that the RTIF packlet and ports are in-service.
- if the RTIF hardware is an HCMIC CP, ensure that the CP and its RTIF ports are in-service

Associated OM registers

XRTIF

XAIOP

This page is left blank intentionally.

XAC306 DISK

Explanation

The system generates the Disk log report when a Disk packlet is out-of-service (OOS).

The Disk log report indicates the recommended action that operating company personnel can follow to correct the condition. When the condition clears, the system generates the Disk Alarm Cleared log (XAC606) report.

The Disk log report generates a Card List when the system detects a fault on more than one CP or packlet. The Card List displays other CPs and packlets that operating company personnel need to check as possible sources of the fault identified in the log report.

A Disk log report indicates a **Disk Minor alarm** condition. This alarm condition means that at least one Disk packlet is OOS.

Event Type

Fault (FLT)

Format

The format for log XAC306 follows:

```
Severity XACnnn mmmdd hh:mm:ssssdd Event Type  Log Title
    IMPACT:  <System Impact Statement>
    DESCRIPTION: State has changed from OldState to NewState by Init. action
    Class:     Type State Site  FL  Row  Bay    Shf/Slt/Pk   EqPEC/Serial
               cccc cccc  cccc  nn  cnn  cccc:nn nn nns  p ccccnncc/nnnnnnnn
    REASON:  <Reason Statement>
    ACTION:  <Action Statement>
    FAULT RECORD ID: hhhhhhhh
    Check the following card(s) for possible source of fault.
            Weight Type Site FL Row Bay     Shf/Slt/Pk/Dv   EqPEC/Serial
            nnn% cccc cccc nn cnn cccc:nn nn nnc c  n nnnnccnn/cccccccccccc
            nnn% cccc cccc nn cnn cccc:nn nn nnc c  n nnnnccnn/cccccccccccc
             .... ..
            nnn% cccc cccc nn cnn cccc:nn nn nnc c  n nnnnccnn/cccccccccccc
```

XAC306 DISK (continued)

Example

An example of log XAC306 follows:

```
*     XAC306 JAN01 15:22:28  0011  FLT   Disk
    IMPACT:  At least one Disk packlet is out of service.
    DESCRIPTION: State has changed from INSV to CBSY by SYSTEM action.
    CARD:      Type State Site  FL  Row Bay    Shf/Slt/Pk   EqPEC/Serial
                DISKCBsy  HOST  01  A00 DPCC:00  01 02F L NTLX06AA/nnnnnnnnnn
    REASON:  Disk packlet is CBsy due to out of service IOP.
    ACTION:  Return IOP card to service.
    FAULT RECORD ID: 12345678
```

Field descriptions

The following table explains each of the fields in log XAC306:

Field descriptions for Disk log (Sheet 1 of 4)

Field	Value	Description
Severity	One asterisk (*)	Displays the severity of the associated alarm. One asterisk (*) indicates a minor alarm condition. At least one Disk packlet is out-of-service (OOS).
Reportid	XAC306	The Reportid field displays the log group and identification number of the log report.
Event Type	FLT	The Event Type field displays the type of event identified in the log report.
Log title	Text string	A text string describing the title of the log report.
IMPACT	Text string	The Impact field describes the impact of the condition to the XA-Core. (This line is generated only if the state change has a negative impact.)
DESCRIPTION	Text string	A text string describing the state change. The DESCRIPTION field contains the following fields: Old State, New State, and Initiator.
OldState	4 characters	A character field identifying the “from” state. Possible values are: SYSB, CBSY, MBSY, ISTB, INSV, UNEQ, and SPLT.
NewState	4 characters	A character field identifying the “to” state. Possible values are: SYSB, CBSY, MBSY, ISTB, INSV, UNEQ, and SPLT.

XAC306 DISK (continued)

Field descriptions for Disk log (Sheet 2 of 4)

Field	Value	Description
Initiator (Init)	Up to 12 characters	A character field identifying the initiator of the state change. Possible values are: MANUAL, SYSTEM, RECOVERY, PROVISIONING, CLOCKEVENT, FAULT, SWACT, REX, IMGTST, MSMTCE, SREX, AUDIT, IRM, and CCMT.
Class	4 characters	The class of resource that is involved in the state change. Possible values are: CARD, PORT, LINK, and TOD.
Type	4 characters	A character field identifying the type of CP or packlet identified in the log report. This field, in conjunction with the Class field, identifies the resource involved in the state change. For example, Class Link and Type ETHR identifies an Ethernet link.
State	4 characters	The State field displays the current operational state of the CP or packlet identified in the log report.
Site	4 characters	The Site field displays the site location of the switch that contains the CP or packlet identified in the log report.
Floor	2 digits	The Floor field displays the floor position, within the site, of the CP or packlet identified in the log report.
Row	Alphanumeric: 1 digit followed by 2 characters	The Row field identifies the row position, on the floor, that contains the CP or packlet identified in the log report.
Bay	DPCC:00	The Bay field identifies the bay (frame type and number) that contains the CP or packlet identified in the log report.
Shelf	2 digits	A number identifying the shelf where the CP, packlet, or device is located. Possible values are 0, 1, 2, and 3.

XAC306 DISK (continued)

Field descriptions for Disk log (Sheet 3 of 4)

Field	Value	Description
Slot	3 alphanumeric characters	Two digits identifying the slot number and one character identifying the side (front or rear) of the shelf. Possible values for the slot are in the range 1 to 18. Possible values for the side are F and R.
Packlet	1 character (optional)	A character identifying the packlet position (upper or lower). Possible values are U and L.
Device	1 digit (optional)	One digit identifying the number of the device (0 or 1) involved in the state change. This field is displayed only if the Class of the resource involved in the state change is PORT, LINK, or TOD.
EqPEC	9 alphanumeric characters	The EqPEC field identifies the product engineering code (EqPEC) of the CP or packlet identified in the log report. If the device involved in the state change is not a CP or packlet, then the EqPEC displayed is that of the CP or packlet that is hosting the device.
Serial	14 alphanumeric characters	The Serial field identifies the serial number of the CP or packlet identified in the log report. If the device involved in the state change is not a CP or packlet, then the serial number displayed is that of the CP or packlet that is hosting the device.
REASON	Text string (optional)	The Reason field describes the cause of the condition identified in the log report. This field is not displayed if the state change was initiated by the user.
ACTION	Text string (optional)	The Action field displays the recommended action that operating company personnel can follow to correct the condition identified in the log report.
Fault Record Id	8 hexadecimal characters (optional)	A hexadecimal identifier that references an entry in the XA-Core Fault Query Tool database. (This field is displayed only if the condition identified in the log report was caused by a recorded hardware fault.)

XAC306 DISK (end)

Field descriptions for Disk log (Sheet 4 of 4)

Field	Value	Description
Cardlist	Variable field (optional)	The Cardlist field displays other CPs or packlets that operating company personnel need to check as possible sources of the fault identified in the log report. The Cardlist field displays the card or packlet weight (probability, shown as a percentage, that the CP or packlet contains a fault), card type, state, site, floor, row, bay, shelf and slot position, the product engineering code and serial number for each CP or packlet. A cardlist is displayed only if the number of CPs or packlets involved in the fault report was greater than one.

Action

If the Disk packlet state is ManB, return the Disk packlet to service.

If the Disk packlet state is CBsy, return the input/output processor (IOP) circuit pack (CP) to service.

If the XA-Core system is in split mode, take no action. The Disk packlet returns-to-service (RTS) when the XA-Core system exits split mode.

Associated OM registers

XAIOP

XADISK

This page is left blank intentionally.

XAC307 Tape

Explanation

The system generates the Tape log report when a Tape packlet is out-of-service (OOS).

The Tape log report indicates the recommended action that operating company personnel can follow to correct the condition. When the condition clears, the system generates the Tape Alarm Cleared log (XAC607) report.

The Tape log report generates a Card List when the system detects a fault on more than one CP or packlet. The Card List displays other CPs and packlets that operating company personnel need to check as possible sources of the fault identified in the log report.

A Tape log report indicates a **Tape Minor alarm** condition. This alarm condition means at least one Tape packlet is OOS.

Event Type

Fault (FLT)

Format

The format for log XAC307 follows:

```
Severity XACnnn mmmdd hh:mm:ssssdd Event Type  Log Title
    IMPACT:  <System Impact Statement>
    DESCRIPTION: State has changed from OldState to NewState by Init. action
    Class:     Type State Site  FL  Row  Bay    Shf/Slt/Pk   EqPEC/Serial
               cccc cccc  cccc  nn  cnn  cccc:nn nn nns  p ccccnncc/nnnnnnnn
    REASON:  <Reason Statement>
    ACTION:  <Action Statement>
    FAULT RECORD ID: hhhhhhhh
    Check the following card(s) for possible source of fault.
            Weight Type Site FL Row Bay     Shf/Slt/Pk/Dv   EqPEC/Serial
            nnn% cccc cccc nn cnn cccc:nn nn nnc c  n nnnnccnn/cccccccccccc
            nnn% cccc cccc nn cnn cccc:nn nn nnc c  n nnnnccnn/cccccccccccc
             .... ..
            nnn% cccc cccc nn cnn cccc:nn nn nnc c  n nnnnccnn/cccccccccccc
```

XAC307 Tape (continued)

Example

An example of log XAC307 follows:

```
*     XAC307 MAR17 15:22:28  0011  FLT   Tape
    IMPACT:  At least one tape packlet is out of service.
    DESCRIPTION: State has changed from INSV to CBSY by SYSTEM action.
    CARD:      Type State Site  FL  Row Bay    Shf/Slt/Pk   EqPEC/Serial
                TapeCBsy  HOST  01  A00 DPCC:00  00 02F U NTLX07AA/nnnnnnnnnn
    REASON:  Tape packlet is CBsy due to out of service IOP.
    ACTION:  Return IOP card to service.
    FAULT RECORD ID: 12345678
```

Field descriptions

The following table explains each of the fields in log XAC307:

Field descriptions for Tape log (Sheet 1 of 4)

Field	Value	Description
Severity	One asterisk (*)	Displays the severity of the associated alarm. One asterisk (*) indicates a minor alarm condition. At least one Tape packlet is out-of-service (OOS).
Reportid	XAC307	The Reportid field displays the log group and identification number of the log report.
Event Type	FLT	The Event Type field displays the type of event identified in the log report.
Log title	Text string	A text string describing the title of the log report.
IMPACT	Text string	The Impact field describes the impact of the condition to the XA-Core. (This line is generated only if the state change has a negative impact.)
DESCRIPTION	Text string	A text string describing the state change. The DESCRIPTION field contains the following fields: Old State, New State, and Initiator.
OldState	4 characters	A character field identifying the “from” state. Possible values are: SYSB, CBSY, MBSY, ISTB, INSV, UNEQ, and SPLT.
NewState	4 characters	A character field identifying the “to” state. Possible values are: SYSB, CBSY, MBSY, ISTB, INSV, UNEQ, and SPLT.

XAC307 Tape (continued)

Field descriptions for Tape log (Sheet 2 of 4)

Field	Value	Description
Initiator (Init)	Up to 12 characters	A character field identifying the initiator of the state change. Possible values are: MANUAL, SYSTEM, RECOVERY, PROVISIONING, CLOCKEVENT, FAULT, SWACT, REX, IMGTST, MSMTCE, SREX, AUDIT, IRM, and CCMT.
Class	4 characters	The class of resource that is involved in the state change. Possible values are: CARD, PORT, LINK, and TOD.
Type	4 characters	A character field identifying the type of CP or packlet identified in the log report. This field, in conjunction with the Class field, identifies the resource involved in the state change. For example, Class Link and Type ETHR identifies an Ethernet link.
State	4 characters	The State field displays the current operational state of the CP or packlet identified in the log report.
Site	4 characters	The Site field displays the site location of the switch that contains the CP or packlet identified in the log report.
Floor	2 digits	The Floor field displays the floor position, within the site, of the CP or packlet identified in the log report.
Row	Alphanumeric: 1 digit followed by 2 characters	The Row field identifies the row position, on the floor, that contains the CP or packlet identified in the log report.
Bay	DPCC:00	The Bay field identifies the bay (frame type and number) that contains the CP or packlet identified in the log report.
Shelf	2 digits	A number identifying the shelf where the CP, packlet, or device is located. Possible values are 0, 1, 2, and 3.

XAC307 Tape (continued)

Field descriptions for Tape log (Sheet 3 of 4)

Field	Value	Description
Slot	3 alphanumeric characters	Two digits identifying the slot number and one character identifying the side (front or rear) of the shelf. Possible values for the slot are in the range 1 to 18. Possible values for the side are F and R.
Packlet	1 character (optional)	A character identifying the packlet position (upper or lower). Possible values are U and L.
Device	1 digit (optional)	One digit identifying the number of the device (0 or 1) involved in the state change. This field is displayed only if the Class of the resource involved in the state change is PORT, LINK, or TOD.
EqPEC	9 alphanumeric characters	The EqPEC field identifies the product engineering code (EqPEC) of the CP or packlet identified in the log report. If the device involved in the state change is not a CP or packlet, then the EqPEC displayed is that of the CP or packlet that is hosting the device.
Serial	14 alphanumeric characters	The Serial field identifies the serial number of the CP or packlet identified in the log report. If the device involved in the state change is not a CP or packlet, then the serial number displayed is that of the CP or packlet that is hosting the device.
REASON	Text string (optional)	The Reason field describes the cause of the condition identified in the log report. This field is not displayed if the state change was initiated by the user.
ACTION	Text string (optional)	The Action field displays the recommended action that operating company personnel can follow to correct the condition identified in the log report.
Fault Record Id	8 hexadecimal characters (optional)	A hexadecimal identifier that references an entry in the XA-Core Fault Query Tool database. (This field is displayed only if the condition identified in the log report was caused by a recorded hardware fault.)

XAC307 Tape (end)

Field descriptions for Tape log (Sheet 4 of 4)

Field	Value	Description
Cardlist	Variable field (optional)	The Cardlist field displays other CPs or packlets that operating company personnel need to check as possible sources of the fault identified in the log report. The Cardlist field displays the card or packlet weight (probability, shown as a percentage, that the CP or packlet contains a fault), card type, state, site, floor, row, bay, shelf and slot position, the product engineering code and serial number for each CP or packlet. A cardlist is displayed only if the number of CPs or packlets involved in the fault report was greater than one.

Action

If the Tape packlet state is ManB, return the Tape packlet to service.

If the Tape packlet state is CBsy, return the input/output processor (IOP) CP to service.

If the XA-Core system is in split mode, take no action. The Tape packlet returns-to-service (RTS) when the XA-Core system exits Split mode.

Associated OM registers

XATAPE

XAIOP

This page is left blank intentionally.

XAC308 Image Test Report

Explanation

The system generates the Image Test Report log report when the XA-Core image test executes. The XA-Core image test checks for correct software function and image restart capability.

The Image Test Report log report indicates the recommended action that operating company personnel can follow to correct the condition identified in the log. When the condition clears, the system generates the Image Alarm Cleared log (XAC608) report.

An Image Test Report log indicates an **Image Critical alarm** condition. This alarm condition indicates that an XA-Core Image is bad.

Event Type

Fault (FLT)

XAC308 Image Test Report (continued)

Format

The format for log XAC308 follows:

```
Severity XACnnn mmmdd hh:mm:ss ssdd  Event Type  Event Text
       INITIATOR:<Manual/System/REx>
       RESTART TYPE:<Warm/Cold/Reload>
       RESULT:    <Image Maybe Okay/Image Bad/Image Test Aborted/Image Test Not Run
       SUBTEST/PROCESS CHECK:                    FAILED     NOT-RUN
       RTS Matecom
       Sending Data to Inactive Side
       Receiving Data from Inactive Side
       Inactive Timeout
       Login for Disconnected User
       Response from Command Interface
       Critical Process Verification
          Overall Process
          Login    Process
          HDRCON   Process
          NHDRCON  Process
          CALLP    Process
       Program Store Check
       Data Store Check
       Allocating DS Temp
       Allocating DS Prot
       Allocating DS Perm
       Allocating PS Temp
       Allocating PS Prot
       Deallocating DS Temp
       Deallocating DS Prot
       Deallocating DS Perm
       Deallocating PS Temp
       Deallocating PS Prot
       Trap Rate Check
       IMPACT:<Impact statement>
       ACTION: <Action Statement>
```

XAC308 Image Test Report (continued)

Example

An example of log XAC308 follows:

```
**     XAC308  MAY07  10:11:09  9000  FLT  Image Test Report
       INITIATOR:     System
       RESTART TYPE:  Warm
       RESULT:        Image Bad
       SUBTEST/PROCESS CHECK:                    FAILED     NOT-RUN
       RTS Matecom                                  X
       Sending Data to Inactive Side                           X
       Receiving Data from Inactive Side            X
       Inactive Timeout                                        X
       Login for Disconnected User                  X
       Response from Command Interface              X
       Critical Process Verification
         Overall Process                                       X
         Login    Process                                      X
         HDRCON   Process                                      X
         NHDRCON  Process                                      X
         CALLP    Process                                      X
       Program Store Check                          X
       Data Store Check                             X
       Allocating DS Temp                           X
       Allocating DS Prot                           X
       Allocating DS Perm                                      X
       Allocating PS Temp                           X
       Allocating PS Prot                                      X
       Deallocating DS Temp                                    X
       Deallocating DS Prot                         X
       Deallocating DS Perm                                    X
       Deallocating PS Temp                         X
       Deallocating PS Prot                         X
       Trap Rate Check                              X
       IMPACT:  Image is not restartable
       ACTION:  Do not attempt an active restart!
                Contact Emergency Personnel.
```

Note: The XAC308 log only displays subtests or process checks that failed or were not run. This example of log XAC308 displays all possible subtests.

XAC308 Image Test Report (continued)

Field descriptions

The following table explains each of the fields in log XAC308:

Field descriptions for Image Test Report log (Sheet 1 of 2)

Field	Value	Description
Severity	Two asterisks (**), or one asterisk (*)	Displays the severity of the associated alarm. Two asterisks (**) indicates a major alarm condition. An XA-Core image test detected that an image is Bad. One asterisk (*) indicates a minor alarm condition. An XA-Core image test detected that an image maybe okay, an image test aborted, or an image test was not run.
Reportid	XAC308	The Reportid field displays the log group and identification number of the log report.
Event Type	FLT	The Event Type field displays the type of event identified in the log report.
Event Text	Text string	The Event Text field describes the type of event identified in the log report.
INITIATOR	Manual, System, or REx	The INITIATOR field identifies the method used to start an image test.
RESTART TYPE	Warm, Cold, or Reload	The RESTART TYPE field indicates the type of restart used to take an image test
RESULT	Image Maybe Okay, Image Bad, Image Test Aborted, or Image Test Not Run	The RESULT field indicates the result of the XA-Core image test.
SUBTEST /PROCESS CHECK	Text string	The SUBTEST/PROCESS CHECK field describes specific subtests or process checks that failed or were not run during an XA-Core image test.
FAILED	“X”	An “X” indicates that the subtest or process check failed during an image test. Log report XAC308 only displays the subtests or process checks that failed or were not run during an image test.

XAC308 Image Test Report (end)

Field descriptions for Image Test Report log (Sheet 2 of 2)

Field	Value	Description
NOT-RUN	“X”	An “X” indicates that the subtest and process check was not run during an image test. Log report XAC308 only displays those subtests or process checks that failed or were not run during an image test.
IMPACT	Text string	The Impact field describes the impact of the condition to the XA-Core.
ACTION	Text string	The Action field recommends the action that operating company personnel can take to correct the problem identified in the log report.

Action

If the image test indicates Image may be Ok, the image may not be restartable. Contact Emergency Personnel.

If the image test indicates Image Bad, the image is not restartable. Do not try an active restart. Contact Emergency Personnel.

If the image test indicates Image Test Aborted, or Image Test Not Run, take no action.

Associated OM registers

There are no associated OM registers for this log.

This page is left blank intentionally.

XAC309 AMDI

Explanation

The system generates the ATM multinode data interface (AMDI) log report when there is a loss of communication between the XA-Core and any Succession multi gateway (SMG) peripheral. The log also occurs when there is a loss of AMDI packlet link redundancy.

The AMDI log report indicates the recommended action that operating company personnel can follow to correct the condition. When the condition clears, the system generates the AMDI cleared (XAC609) log report.

The AMDI log generates a card list when the system detects a fault on more than one packlet. The card list displays other packlets that operating company personnel need to check as possible sources of the fault identified in the log report.

An AMDI log indicates one of two alarm levels

- AMDI Critical Alarm: There is no communication between the XA-Core and at least one SMG peripheral.
- AMDI Major Alarm: There is a loss of AMDI packlet link redundancy between the XA-Core and SMG peripherals.

Event type

Fault (FLT)

Format

The format for log XAC309 follows:

```
Severity XACnnn mmmdd hh:mm:ssssdd Event Type  Log Title
    IMPACT:  <System Impact Statement>
    DESCRIPTION: State has changed from OldState to NewState by Init. action
    Class:     Type State Site  FL  Row  Bay    Shf/Slt/Pk    EqPEC/Serial
               cccc cccc  cccc  nn  cnn  cccc:nn nn nns  p ccccnncc/nnnnnnnn
    REASON:  <Reason Statement>
    ACTION:  <Action Statement>
    FAULT RECORD ID: hhhhhhhh
    Check the following card(s) for possible source of fault.
            Weight Type Site FL Row Bay     Shf/Slt/Pk/Dv   EqPEC/Serial
            nnn% cccc cccc nn cnn cccc:nn nn nnc c  n nnnnccnn/cccccccccccc
            nnn% cccc cccc nn cnn cccc:nn nn nnc c  n nnnnccnn/cccccccccccc
             .... ..
            nnn% cccc cccc nn cnn cccc:nn nn nnc c  n nnnnccnn/cccccccccccc
```

XAC309 AMDI (continued)

Example

An example of log XAC309 follows:

```
**    XAC309 OCT29 15:22:28  1199  FLT   AMDI (ATM Multinode Data Interface)
    IMPACT:  Group redundancy changed.
    DESCRIPTION: State has changed from INSV to MANB by MANUAL action.
    CARD:      Type State Site FL Row Bay    Shf/Slt/Pk   EqPEC/Serial
                AMDIManB  HOST  00 A00 DPCC:00  00 14R L NTLX05BA/nnnnnnnnnn
    REASON:  AMDI link(S) are out of service due to manually busied packlet.
    ACTION:  Attempt to RTS AMDI links.
    FAULT RECORD ID: 12345678
```

Field descriptions

The following table explains each field in log XAC309:

Field descriptions for XAC309 log (Sheet 1 of 4)

Field	Value	Description
Severity	Three asterisks (***) Two asterisks (**)	Displays the severity of the associated alarm. Three asterisks (***) indicate a critical alarm condition. There is no communication between the XA-Core and at least one SMG peripheral. Two asterisks (**) indicate a major alarm condition. There is a loss of AMDI packlet link redundancy between the XA-Core and the SMG peripherals.
Reportid	XAC309	The reportid field displays the log group (XAC) and identification number of the log report.
Event Type	FLT	The Event Type field displays the type of event identified in the log report.
Log title	Text string	A text string describing the title of the log report.
IMPACT	Text string	The Impact field describes the impact of the condition to the XA-Core. (This line is generated only if the state change has a negative impact.)
DESCRIPTION	Text string	A text string describing the state change. The DESCRIPTION field contains the following fields: Old State, New State, and Initiator.
OldState	4 characters	A character field identifying the “from” state. Possible values are: SYSB, CBSY, MBSY, ISTB, INSV, UNEQ, and SPLT.

XAC309 AMDI (continued)

Field descriptions for XAC309 log (Sheet 2 of 4)

Field	Value	Description
NewState	4 characters	A character field identifying the “to” state. Possible values are: SYSB, CBSY, MBSY, ISTB, INSV, UNEQ, and SPLT.
Initiator (Init)	Up to 12 characters	A character field identifying the initiator of the state change. Possible values are: MANUAL, SYSTEM, RECOVERY, PROVISIONING, CLOCKEVENT, FAULT, SWACT, REX, IMGTST, MSMTCE, SREX, AUDIT, IRM, and CCMT.
Class	4 characters	The class of resource that is involved in the state change. Possible values are: CARD, PORT, LINK, and TOD.
Type	4 characters	A character field identifying the type of CP or packlet identified in the log report. This field, in conjunction with the Class field, identifies the resource involved in the state change. For example, Class Link and Type ETHR identifies an Ethernet link.
State	4 characters	The State field displays the current operational state of the CP or packlet identified in the log report.
Site	4 characters	The Site field displays the site location of the switch that contains the CP or packlet identified in the log report.
Floor	2 digits	The Floor field displays the floor position, within the site, of the CP or packlet identified in the log report.
Row	Alphanumeric: 1 digit followed by 2 characters	The Row field identifies the row position, on the floor, that contains the CP or packlet identified in the log report.
Bay	DPCC:00	The Bay field identifies the bay (frame type and number) that contains the CP or packlet identified in the log report.
Shelf	2 digits	A number identifying the shelf where the CP, packlet, or device is located. Possible values are 0, 1, 2, and 3.

XAC309 AMDI (continued)

Field descriptions for XAC309 log (Sheet 3 of 4)

Field	Value	Description
Slot	3 alphanumeric characters	Two digits identifying the slot number and one character identifying the side (front or rear) of the shelf. Possible values for the slot are in the range 1 to 18. Possible values for the side are F and R.
Packlet	1 character (optional)	If the AMDI links are supported by an AMDI packlet, this is a character identifying the packlet position (upper or lower). Possible values are U and L. If the AMDI links are supported by an HIOP circuit pack, the field is blank.
Device	1 digit (optional)	One digit identifying the number of the device (0 or 1) involved in the state change. This field is displayed only if the Class of the resource involved in the state change is PORT, LINK, or TOD.
EqPEC	9 alphanumeric characters	The EqPEC field identifies the product engineering code (EqPEC) of the CP or packlet identified in the log report. If the device involved in the state change is not a CP or packlet, then the EqPEC displayed is that of the CP or packlet that is hosting the device.
Serial	14 alphanumeric characters	The Serial field identifies the serial number of the CP or packlet identified in the log report. If the device involved in the state change is not a CP or packlet, then the serial number displayed is that of the CP or packlet that is hosting the device.
REASON	Text string (optional)	The Reason field describes the cause of the condition identified in the log report. This field is not displayed if the state change was initiated by the user.
ACTION	Text string (optional)	The Action field displays the recommended action that operating company personnel can follow to correct the condition identified in the log report.

XAC309 AMDI (continued)

Field descriptions for XAC309 log (Sheet 4 of 4)

Field	Value	Description
Fault Record Id	8 hexadecimal characters (optional)	A hexadecimal identifier that references an entry in the XA-Core Fault Query Tool database. (This field is displayed only if the condition identified in the log report was caused by a recorded hardware fault.)
Cardlist	Variable field (optional)	The Cardlist field displays other CPs or packlets that operating company personnel need to check as possible sources of the fault identified in the log report. The Cardlist field displays the card or packlet weight (probability, shown as a percentage, that the CP or packlet contains a fault), card type, state, site, floor, row, bay, shelf and slot position, the product engineering code and serial number for each CP or packlet. A cardlist is displayed only if the number of CPs or packlets involved in the fault report was greater than one.

Action

If the state of the AMDI hardware (HIOP circuit pack or AMDI packlet) is ManB, attempt to return it to service. Replace if faulty.

If the AMDI packlet state is Cbsy because an Input/Output Processor (IOP) circuit pack (CP) is out-of-service, ensure the identified IOP circuit is in-service.

If the state of the AMDI hardware (HIOP circuit pack or AMDI packlet) is SysB, attempt to return it to service. Replace if faulty.

If the state of the AMDI hardware (HIOP circuit pack or AMDI packlet) is unknown and a state change has occurred on an AMDI packlet, port, or link, ensure that AMDI hardware is InSv. Check the integrity of the AMDI links.

If the AMDI link state is ManB, attempt to return to service the AMDI link.

If the AMDI link state is InSv, check the integrity of the link.

If the AMDI link state is SysB, contact next level of support if problem persists.

XAC309 AMDI (end)

If the XA-Core system is in split mode, take no action. The AMDI hardware and links will return to service when the system exits split mode.

If the AMDI link state is unknown and a state change has occurred on an AMDI link, ensure AMDI links are InSv.

Associated OM registers

The OM register XAMDMAJU or XAMDCRIU are pegged depending on a major or a critical alarm. OM registers XAMDI, XAMDIPRT, or XAMDILNK are pegged if a fault causes an AMDI packlet, port, or link to go into an OOS state.

XAC310 Card Manual Busy

Explanation

The Card Manual Busy log indicates that the craftsperson has manually busied a card, packlet, port, or link that was already in an out-of-service state.

Event Type

Manual Busy (MBSY).

Format

The format for log XAC310 follows:

```
XACnnn      mmmdd hh:mm:ss  ssdd  Event Type  Log Title
  DESCRIPTION: State has changed from OldState to NewState by Init. action
  Class:     Type State Site  FL  Row  Bay    Shf/Slt/Pk   EqPEC/Serial
             cccc cccc  cccc  nn  cnn  cccc:nn nn nns  p ccccnncc/nnnnnnnn
```

Example

An example of log XAC310 follows:

```
XAC310      JUN12 11:01:09  2400  MANB ManB (Card Manual Busy)
  DESCRIPTION: State has changed from CBSY to MBSY by MANUAL action
  LINK:    Type State Site FL Row Bay     Shf/Slt/Pk/Lk    EqPEC/Serial
          ETHR MBSY  HOST 01 A00 DPCC:00 00  05R U  0  NTLX09AA/nnnnnnnn
```

Field descriptions

The following table explains each of the fields in log XAC610:

Field descriptions for the Card Manual Busy log (Sheet 1 of 3)

Field	Value	Description
Reportid	XAC310	The Reportid field displays the log group (XAC) and identification number of the log report.
Event Type	MBSY	The Event Type field displays the type of event identified in the log report.
Log title	Text string	A text string describing the title of the log report.

XAC310 Card Manual Busy (continued)

Field descriptions for the Card Manual Busy log (Sheet 2 of 3)

Field	Value	Description
DESCRIPTION	Text string	A text string describing the state change. The DESCRIPTION field contains the following fields: Old State, New State, and Initiator.
OldState	4 characters	A character field identifying the “from” state. Possible values are: SYSB, CBSY, MBSY, ISTB, INSV, UNEQ, and SPLT.
NewState	4 characters	A character field identifying the “to” state. Possible values are: SYSB, CBSY, MBSY, ISTB, INSV, UNEQ, and SPLT.
Initiator (Init)	Up to 12 characters	A character field identifying the initiator of the state change. Possible values are: MANUAL, SYSTEM, RECOVERY, PROVISIONING, CLOCKEVENT, FAULT, SWACT, REX, IMGTST, MSMTCE, SREX, AUDIT, IRM, and CCMT.
Class	4 characters	The class of resource that is involved in the state change. Possible values are: CARD, PORT, and LINK. (TOD is not a possible value because it is not possible to busy a TOD device.)
Type	4 characters	A character field identifying the type of CP or packlet identified in the log report. This field, in conjunction with the Class field, identifies the resource involved in the state change. For example, Class Link and Type ETHR identifies an Ethernet link.
State	4 characters	The State field displays the current operational state of the CP or packlet identified in the log report.
Site	4 characters	The Site field displays the site location of the switch that contains the CP or packlet identified in the log report.
Floor	2 digits	The Floor field displays the floor position, within the site, of the CP or packlet identified in the log report.
Row	Alphanumeric: 1 digit followed by 2 characters	The Row field identifies the row position, on the floor, that contains the CP or packlet identified in the log report.

XAC310 Card Manual Busy (continued)

Field descriptions for the Card Manual Busy log (Sheet 3 of 3)

Field	Value	Description
Bay	DPCC:00	The Bay field identifies the bay (frame type and number) that contains the CP or packlet identified in the log report.
Shelf	2 digits	A number identifying the shelf where the CP, packlet, or device is located. Possible values are 0, 1, 2, and 3.
Slot	3 alphanumeric characters	Two digits identifying the slot number and one character identifying the side (front or rear) of the shelf. Possible values for the slot are in the range 1 to 18. Possible values for the side are F and R.
Packlet	1 character (optional)	If the component that was busied is a packlet or a device on a packlet, this is a character identifying the packlet position (upper or lower). Possible values are U and L.
Device	1 digit (optional)	One digit identifying the number of the device (0 or 1) involved in the state change. This field is displayed only if the Class of the resource involved in the state change is PORT or LINK.
EqPEC	9 alphanumeric characters	The EqPEC field identifies the product engineering code (EqPEC) of the CP or packlet identified in the log report. If the device involved in the state change is not a CP or packlet, then the EqPEC displayed is that of the CP or packlet that is hosting the device.
Serial	14 alphanumeric characters	The Serial field identifies the serial number of the CP or packlet identified in the log report. If the device involved in the state change is not a CP or packlet, then the serial number displayed is that of the CP or packlet that is hosting the device.

XAC310 Card Manual Busy (end)

Action

There are no actions for this log.

Associated OM registers

There are no OM registers for this log.

XAC312 IOP

Explanation

The system generates the input/output processor (IOP) log report when an input/output processor (IOP) circuit pack or a high performance input/output processor (HIOP) circuit pack or a high performance CMIC (HCMIC) circuit pack is out-of-service (OOS).

The IOP log report indicates the recommended action that operating company personnel can follow to correct the condition. When the condition clears, the system generates the IOP Cleared log (XAC612) report.

The IOP log generates a Card List when the system detects a fault on more than one CP or packlet. The Card List displays other CPs and packlets that operating company personnel need to check as possible sources of the fault identified in the log report.

A IOP log indicates an **IOPflt Minor alarm** condition. This alarm condition means that at least one IOP or HIOP or HCMIC CP is OOS.

Event type

Fault (FLT)

Format

The format for log XAC312 follows:

```
Severity XACnnn mmmdd hh:mm:ssssdd Event Type  Log Title
    IMPACT:  <System Impact Statement>
    DESCRIPTION: State has changed from OldState to NewState by Init. action
    Class:     Type State Site  FL  Row  Bay    Shf/Slt/Pk   EqPEC/Serial
               cccc cccc  cccc  nn cnn cccc:nn nn nns  p ccccnncc/nnnnnnnn
    REASON:  <Reason Statement>
    ACTION:  <Action Statement>
    FAULT RECORD ID: hhhhhhhh
    Check the following card(s) for possible source of fault.
            Weight Type Site FL Row Bay     Shf/Slt/Pk/Dv   EqPEC/Serial
            nnn% cccc cccc nn cnn cccc:nn nn nnc c  n nnnnccnn/cccccccccccc
            nnn% cccc cccc nn cnn cccc:nn nn nnc c  n nnnnccnn/cccccccccccc
             .... ..
            nnn% cccc cccc nn cnn cccc:nn nn nnc c  n nnnnccnn/cccccccccccc
```

XAC312 IOP (continued)

Example

An example of log XAC312 follows:

```
**    XAC312 OCT30 15:22:28  0011  FLT   IOP (Input Output Processor)
    IMPACT:  At least one IOP card is out of service.
    DESCRIPTION: State has changed from INSV to MANB by MANUAL action.
    CARD:      Type State Site  FL  Row Bay    Shf/Slt/Pk   EqPEC/Serial
                IOP ManB  HOST  01  A00 DPCC:00  00 15R  NTLX03BA/nnnnnnnnnn
    REASON:  IOP card has been manually busied.
    ACTION:  RTS IOP card.
    FAULT RECORD ID: 12345678
```

Field descriptions

The following table explains each of the fields in log XAC312:

Field descriptions for IOP log (Sheet 1 of 4)

Field	Value	Description
Severity	One asterisk (*)	Displays the severity of the associated alarm. One asterisk (*) indicates a minor alarm condition. At least one IOP CP is out-of-service (OOS).
Reportid	XAC312	The Reportid field displays the log group and identification number of the log report.
Event Type	FLT	The Event Type field displays the type of event identified in the log report.
Log title	Text string	A text string describing the title of the log report.
IMPACT	Text string	The Impact field describes the impact of the condition to the XA-Core. (This line is generated only if the state change has a negative impact.)
DESCRIPTION	Text string	A text string describing the state change. The DESCRIPTION field contains the following fields: Old State, New State, and Initiator.
OldState	4 characters	A character field identifying the “from” state. Possible values are: SYSB, CBSY, MBSY, ISTB, INSV, UNEQ, and SPLT.
NewState	4 characters	A character field identifying the “to” state. Possible values are: SYSB, CBSY, MBSY, ISTB, INSV, UNEQ, and SPLT.

XAC312 IOP (continued)

Field descriptions for IOP log (Sheet 2 of 4)

Field	Value	Description
Initiator (Init)	Up to 12 characters	A character field identifying the initiator of the state change. Possible values are: MANUAL, SYSTEM, RECOVERY, PROVISIONING, CLOCKEVENT, FAULT, SWACT, REX, IMGTST, MSMTCE, SREX, AUDIT, IRM, and CCMT.
Class	4 characters	The class of resource that is involved in the state change. Possible values are: CARD, PORT, LINK, and TOD.
Type	4 characters	A character field identifying the type of CP or packlet identified in the log report. This field, in conjunction with the Class field, identifies the resource involved in the state change. For example, Class Link and Type ETHR identifies an Ethernet link.
State	4 characters	The State field displays the current operational state of the CP or packlet identified in the log report.
Site	4 characters	The Site field displays the site location of the switch that contains the CP or packlet identified in the log report.
Floor	2 digits	The Floor field displays the floor position, within the site, of the CP or packlet identified in the log report.
Row	Alphanumeric: 1 digit followed by 2 characters	The Row field identifies the row position, on the floor, that contains the CP or packlet identified in the log report.
Bay	DPCC:00	The Bay field identifies the bay (frame type and number) that contains the CP or packlet identified in the log report.
Shelf	2 digits	A number identifying the shelf where the CP, packlet, or device is located. Possible values are 0, 1, 2, and 3.

XAC312 IOP (continued)

Field descriptions for IOP log (Sheet 3 of 4)

Field	Value	Description
Slot	3 alphanumeric characters	Two digits identifying the slot number and one character identifying the side (front or rear) of the shelf. Possible values for the slot are in the range 1 to 18. Possible values for the side are F and R.
Packlet	1 character (optional)	A character identifying the packlet position (upper or lower). Possible values are U and L.
Device	1 digit (optional)	One digit identifying the number of the device (0 or 1) involved in the state change. This field is displayed only if the Class of the resource involved in the state change is PORT, LINK, or TOD.
EqPEC	9 alphanumeric characters	The EqPEC field identifies the product engineering code (EqPEC) of the CP or packlet identified in the log report. If the device involved in the state change is not a CP or packlet, then the EqPEC displayed is that of the CP or packlet that is hosting the device.
Serial	14 alphanumeric characters	The Serial field identifies the serial number of the CP or packlet identified in the log report. If the device involved in the state change is not a CP or packlet, then the serial number displayed is that of the CP or packlet that is hosting the device.
REASON	Text string (optional)	The Reason field describes the cause of the condition identified in the log report. This field is not displayed if the state change was initiated by the user.
ACTION	Text string (optional)	The Action field displays the recommended action that operating company personnel can follow to correct the condition identified in the log report.
Fault Record Id	8 hexadecimal characters (optional)	A hexadecimal identifier that references an entry in the XA-Core Fault Query Tool database. (This field is displayed only if the condition identified in the log report was caused by a recorded hardware fault.)

XAC312 IOP (end)

Field descriptions for IOP log (Sheet 4 of 4)

Field	Value	Description
Cardlist	Variable field (optional)	The Cardlist field displays other CPs or packlets that operating company personnel need to check as possible sources of the fault identified in the log report. The Cardlist field displays the card or packlet weight (probability, shown as a percentage, that the CP or packlet contains a fault), card type, state, site, floor, row, bay, shelf and slot position, the product engineering code and serial number for each CP or packlet. A cardlist is displayed only if the number of CPs or packlets involved in the fault report was greater than one.

Action

If the IOP or HIOP or HCMIC CP state is ManB, return the CP to service.

If the IOP or HIOP or HCMIC CP state is InSv, check other CPs for the source of the fault.

Associated OM registers

XAIOP

This page is left blank intentionally.

XAC320 SysBTh Alarm Raised

Explanation

The system generates the SysBTh Alarm Raised log report when a SysBTh alarm is raised and the severity of the alarm has changed. The possible scenarios are as follows.

- The system raises a SysBTh minor alarm, and previously there were no SysBTh alarms.
- The system increases the severity of a SysBTh alarm from minor to major.
- The system decreases the severity of a SysBTh alarm from major to minor.

At any time when a SysBTh alarm is raised, that alarm represents the highest level of SysBTh activity in the system. For example, if a PE circuit pack goes through enough system-busy transitions to justify the raising of a minor alarm, but an IOP circuit pack goes through enough transitions to justify the raising of a major alarm, the SysBTh major alarm will be raised.

The system monitors the SysB transitions for many components. (The monitored components are listed later in this section). It maintains separate counts for each instance of each monitored component.

The monitored components are separated into groups.

The following list shows the groups and the monitored components.

- The PE group includes PE circuit packs.
- The SM group includes SM circuit packs.
- The IO link (IOlk) group includes all IO links.
- The IO hardware (IOhw) group includes
  - IOP, HIOP, and HCMIC circuit packs
  - all packlets: disk, tape, CMIC, RTIF, Ethernet, and AMDI
  - sections of HIOP circuit packs that are supporting ETHR and AMDI connections
  - sections of HCMIC circuit packs that are supporting CMIC, RTIF, and ETHR connections
  - time-of-day (TOD) devices
  - ports

XAC320 SysBTh Alarm Raised (continued)

For each instance of each monitored component, the system counts the SysB transitions that occur during the current six-hour interval. It also maintains records of the numbers of transitions that occurred during the seven preceding six-hour intervals. For each component, the system sums the totals from the seven preceding intervals and the total from the current interval, producing the 48-hour total, which is the number of SysB transitions occurring over the last 42 to 48 hours.

For each component group, there are minor and major SysB-transition threshold values. The thresholds apply to each component in the component group. To obtain a list of the major and minor thresholds that apply to the component groups, use the CNTRS QUERY command. The system displays the threshold values as part of its response to the CNTRS QUERY command. For detailed information on the display of threshold values, see the description of the QUERY parameter of the CNTRS command in the XAC MAP level. The description is found in the *XA-Core Reference Manual*, in the chapter that describes MAP levels and user interfaces.

For each monitored component, the system compares the component's 48-hour transition total to the minor and major SysB transition thresholds for the group. If the 48-hour SysB transition total equals or exceeds the minor SysB transition threshold, and if the SysBTh minor alarm or SysBTh major alarm is not already raised, the system raises the SysBTh minor alarm (unless the alarm has been disabled). If the 48-hour SysB transition total equals or exceeds the major SysB transition threshold, and if the SysBTh major alarm is not already raised, the system raises the SysBTh major alarm (unless the alarm has been disabled).

Event Type

Fault (FLT)

XAC320 SysBTh Alarm Raised (continued)

Format

The format for log XAC320 follows:

```
 XACnnn  mmmdd  hh:mm:ss  ssdd  Event Type  Log Title
  Reason: <Reason Statement>
  Grp  Type Component     SysB Cnts in last N hrs       Sum  Thresh
  ---  ---- ---------     42 36 30 24 18 12 06 00       ---  ------
<Group> <Type> <Loc.>     nn nn nn nn nn nn nn nn |<Opt> nn  <nn/nn> <Sev>
```

Example

An example of log XAC320 follows:

```
XAC320  NOV02  16:23:29  0019  FLT  SysBTh Alarm Raised
 Reason: Minor alarm cleared.
 Grp  Type Component     SysB Cnts in last N hrs       Sum  Thresh
 ---  ---- ---------     42 36 30 24 18 12 06 00       ---  ------
 IOhw CMIC  4 R L         0  0  0  0  0  0  0  1     |+  6  2/6  **
 IOlk CMIC  4 R L Link1   0  0  0  0  0  0  0  1     |   1  2/8
 IOhw RTIF  4 R U         0  0  0  0  0  0  0  1     |+  6  2/6  **
 IOhw RTIF  4 R U         0  0  0  0  0  0  3  1     |+  6  2/6  **
```

XAC320 SysBTh Alarm Raised (continued)

Field descriptions

The following table explains each of the fields in log XAC320:

Field descriptions for the SysBTh Alarm Raised log (Sheet 1 of 2)

Field	Value	Description
Severity	One asterisk (*) or two asterisks (**)	Displays the severity of the associated alarm. One asterisk (*) indicates an SysBTh minor alarm; two asterisks (**) indicate an SysBTh major alarm.
Reportid	XAC320	The Reportid field displays the log group and identification number of the log report.
Event Type	FLT	The Event Type field displays the type of event identified in the log report.
Log title	Text string	A text string describing the title of the log report.
Reason	“Cleared alarm raised to Minor” or “Cleared alarm raised to Major” or “Minor alarm raised to Major” or “Major alarm lowered to Minor”	A SysBTh alarm is raised, and the severity has changed.
Group	PE SM IOlk IOhw	PE circuit pack SM circuit pack IO links The IOhw category includes IOP and HIOP circuit packs, packlets, ports, and TOD devices.
Type	PE, SM, IOP, HIOP, Tape, Disk, RTIF, OC3, CMIC, AMDI, ETHR, TOD	Item type. OC3 is the equivalent of AMDI.
Loc.	<Slot><Side> <Position> <Device type>	Identifies the location of the component, where <Slot> is numeric in the range 1 to 18 and <Side> is F for front or R for rear. A <Position> value appears only if the component is a packlet or a packlet’s port, link, or time-of-day device. A <Device type> value appears only if the transitions were by a port, link, or TOD device.

XAC320 SysBTh Alarm Raised (continued)

Field descriptions for the SysBTh Alarm Raised log (Sheet 2 of 2)

Field	Value	Description
SysB cnts in last N hrs	Eight numeric values, separated by spaces. Each is an integer in the range 0 to 15.	The number of SysB transitions occurring for the component in the current six-hour interval (the rightmost value), and in each of the seven preceding six-hour intervals. The counter for each interval can count as high as 15.
Opt	A plus sign (+) or a blank space	A plus sign (+) appears in the Opt field if the Group is IOhw, and if the value in the Sum field is a sum of transitions for multiple IOhw components that are associated with the slot.
Sum	Numeric	The sum of the SysB transitions occurring in the current six-hour interval, and in the seven preceding six-hour intervals.
Thresh	Two numeric values separated by a slash	The two numeric values separated by a slash indicate the minor and major SysB transition thresholds for the component.
Sev	One asterisk (*), two asterisks (**), or a blank space	One asterisk indicates that a SysBTh minor alarm is raised. Two asterisks indicate that a SysBTh major alarm is raised.

Action

Investigate the components that have high SysB transition counts, and replace components as necessary.

If link hits occurred because of events at the far end, consider using the CNTRS RESET command to reset the SysB transition counter for each link that was affected.

XAC320 SysBTh Alarm Raised (end)

Associated OM registers

The following registers in the XACORE OM group are associated with this log. Each register is pegged if its associated component (shown in parentheses) goes into the system-busy state.

- XAPE (PE circuit packs)
- XASM (SM circuit packs)
- XAIOP (IOP, HIOP, and HCMIC circuit packs)
- XADISK (Disk packlets)
- XATAPE (Tape packlets)
- XRTIF (RTIF packlets)
- XRTIFPRT (RTIF ports)
- XRTIFLNK (RTIF links)
- XCMIC (CMIC packlets)
- XCMICPRT (CMIC ports)
- XCMICLNK (CMIC links)
- XAMDI (AMDI packlets)
- XAMDIPRT (AMDI ports)
- XAMDILNK (AMDI links)
- XETHR (Ethernet packlets)
- XETHRPRT (Ethernet ports)
- XETHRLNK (Ethernet links)

XAC321 WgSlot (Shelf Audit Failure - Card Configuration)

Explanation

Operating company personnel must insert the correct type of circuit pack (CP) in the XA-Core shelf slot matched for that type of CP. The system can detect the wrong type of CP in a shelf slot in real time (The system detects a clock signal from the CP) or during a software audit.

The system generates the WgSlot (Shelf Audit Failure - Card Configuration) log report if either of the following conditions occurs:

- A shelf audit detects one or more CPs in the wrong XA-Core shelf slot positions.
- A shelf audit detects that a shelf slot configured for a CP is empty.

The WgSlot (Shelf Audit Failure - Card Configuration) log report indicates the recommended action that operating company personnel can follow to correct the condition. When the condition clears, the system generates the WgSlot Cleared (Card Removed) (XAC627) log report.

A WgSlot (Shelf Audit Failure - Card Configuration) log report indicates a **WgSlot Minor alarm** condition. This alarm condition means that the wrong type of CP is in a shelf slot, or a shelf slot configured for a CP is empty.

Event Type

Fault (FLT)

Format

The format for log XAC321 follows:

```
Severity XACnnn mmmdd hh:mm:ssssdd    Event TypeEvent Text
         IMPACT:  <System Impact Statement>
         Shf Slot Side  Expected Card/Pklt   Detected Card/Pklt   Action
         nn  nn   c        cccccc               cccccc            cccccc
         nn  nn   c        cccccc               cccccc            cccccc
         nn  nn   c        cccccc               cccccc            cccccc
         nn  nn   c        cccccc               cccccc            cccccc
```

XAC321 WgSlot (Shelf Audit Failure - Card Configuration) (continued)

Example

An example of log XAC321 follows:

```
*  XAC321 NOV02 13:45:56  8800 FLT  WgSlot (Shelf Audit Failure-Card Configuration)
      IMPACT:  The following slots contain unexpected cards:
      Shf  Slot  Side   Expected Card/Pklt    Detected Card/Pklt   Action
       1    4     F            PE                     none         Add
       1    9     R            none                   SM           Remove
       1    16    F            PE                     IOP          Replace
```

Field descriptions

The following table explains each of the fields in log XAC321:

Field descriptions for WgSlot (Shelf Audit Failure - Card Configuration) log (Sheet 1 of 2)

Field	Value	Description
Severity	One asterisk (*)	Displays the severity of the associated alarm. One asterisk (*) indicates a minor alarm condition. The wrong type of circuit pack (CP) is in an XA-Core shelf slot, or a shelf slot configured for a CP is empty.
Reportid	XAC321	The Reportid field displays the log group and identification number of the log report.
Event Type	FLT	The Event Type field displays the type of event identified in the log report.
Event Text	Text string	The Event Text field describes the type of event identified in the log report.
IMPACT	Text string	The Impact field describes the impact of the condition to the XA-Core.
Shf	0 to 3	The Shf field displays the position number, within the Bay/Frame, of the XA-Core shelf.

XAC321 WgSlot (Shelf Audit Failure - Card Configuration) (end)

Field descriptions for WgSlot (Shelf Audit Failure - Card Configuration) log (Sheet 2 of 2)

Field	Value	Description
Slot	01 to 18	The Slot field displays the slot position, within the shelf, that contains the CP or packlet identified in the log report.
Side	F or R	The Side field displays the front (F) side or rear (R) side position of the shelf that contains the slot identified in the log report.
Expected Card/Pklt	Alphanumeric	The Expected Card/Pklt field displays the type of CP or packlet expected in the shelf slot. If the system expects no CP in the shelf slot, this field displays ”none”.
Detected Card/Pklt	Alphanumeric	The Detected Card/Pklt field displays the type of CP or packlet detected in the shelf slot. If the system detects no CP in the shelf slot, this field displays “none”.
Action	Remove, Add, or Replace	The Action field displays the recommended action that operating company personnel can follow to correct the condition identified in the log report.

Action

If the system detects a circuit pack (CP) in a shelf slot that is not provisioned, remove the CP from that slot.

If the system detects a CP in a shelf slot configured for another type of CP, replace the CP with the correct CP type.

If the system detects no CP in a shelf slot that is configured for a CP, add the correct CP type to the shelf slot.

Associated OM registers

There are no OM registers associated with this log.

This page is left blank intentionally.

XAC322 PETrbl

Explanation

The system generates the Processor Element Trouble (PETrbl) log report when a non-critical fault is detected on a Processor Element (PE) circuit pack (CP). A non-critical fault causes the PE CP to change state from in-service (InSv) to in-service trouble (IsTb).

The PETrbl log report indicates the recommended action that operating company personnel can follow to correct the condition. When the condition clears, the system generates the PETrbl Alarm Cleared log (XAC622) report.

The PETrbl log report generates a Card List when the system detects a fault on more than one CP or packlet. The Card List displays other CPs or packlets that operating company personnel need to check as possible sources of the fault identified in the log report.

An PETrbl log report indicates a PEtrbl minor alarm condition. This alarm condition means that a non-critical fault was detected on a PE CP. The PE CP has changed state from InSv to IsTb.

Event Type

Trouble (TBL)

Format

The format for log XAC322 follows:

```
Severity XACnnn mmmdd hh:mm:ssssdd Event Type  Log Title
    IMPACT:  <System Impact Statement>
    DESCRIPTION: State has changed from OldState to NewState by Init. action
    Class:     Type State Site  FL  Row  Bay    Shf/Slt/Pk   EqPEC/Serial
               cccc cccc  cccc  nn  cnn  cccc:nn nn nns  p cccccncc/nnnnnnnn
    REASON:  <Reason Statement>
    ACTION:  <Action Statement>
    FAULT RECORD ID: hhhhhhhh
    Check the following card(s) for possible source of fault.
            Weight Type Site FL Row Bay     Shf/Slt/Pk/Dv   EqPEC/Serial
            nnn% cccc cccc nn cnn cccc:nn nn nnc c  n nnnnccnn/cccccccccccc
            nnn% cccc cccc nn cnn cccc:nn nn nnc c  n nnnnccnn/cccccccccccc
             .... ..
            nnn% cccc cccc nn cnn cccc:nn nn nnc c  n nnnnccnn/cccccccccccc
```

XAC322 PETrbl (continued)

Example

An example of log XAC322 follows:

```
*     XAC322 NOV01 15:22:28  0011  TBL   PETrbl (Trouble)
    IMPACT:
    DESCRIPTION: State has changed from INSV to ISTB by SYSTEM action.
    CARD:      Type State Site FL Row Bay    Shf/Slt/Pk  EqPEC/Serial
                PE  IsTb  HOST 01 A00 DPCC:00 01 04F  NTLX02BA/nnnnnnnnnn
    REASON:  Non-critical XA-Core fault detected.
    ACTION:  Perform in-service test on the PE card.
```

Field descriptions

The following table explains each of the fields in log XAC322:

Field descriptions for PETrbl log (Sheet 1 of 4)

Field	Value	Description
Severity	One asterisk (*)	Displays the severity of the associated alarm. One asterisk (*) indicates a minor alarm condition. A non-critical fault was detected on a PE CP. The PE CP has changed state from InSv to IsTb
Reportid	XAC322	The Reportid field displays the log group and identification number of the log report.
Event Type	TBL	The Event Type field displays the type of event identified in the log report.
Log title	Text string	A text string describing the title of the log report.
IMPACT	Text string	The Impact field describes the impact of the condition to the XA-Core. (This line is generated only if the state change has a negative impact.)

XAC322 PETrbl (continued)

Field descriptions for PETrbl log (Sheet 2 of 4)

Field	Value	Description
DESCRIPTION	Text string	A text string describing the state change. The DESCRIPTION field contains the following fields: Old State, New State, and Initiator.
OldState	4 characters	A character field identifying the “from” state. Possible values are: SYSB, CBSY, MBSY, ISTB, INSV, UNEQ, and SPLT.
NewState	4 characters	A character field identifying the “to” state. Possible values are: SYSB, CBSY, MBSY, ISTB, INSV, UNEQ, and SPLT.
Initiator (Init)	Up to 12 characters	A character field identifying the initiator of the state change. Possible values are: MANUAL, SYSTEM, RECOVERY, PROVISIONING, CLOCKEVENT, FAULT, SWACT, REX, IMGTST, MSMTCE, SREX, AUDIT, IRM, and CCMT.
Class	4 characters	The class of resource that is involved in the state change. Possible values are: CARD, PORT, LINK, and TOD.
Type	4 characters	A character field identifying the type of CP or packlet identified in the log report. This field, in conjunction with the Class field, identifies the resource involved in the state change. For example, Class Link and Type ETHR identifies an Ethernet link.
State	4 characters	The State field displays the current operational state of the CP or packlet identified in the log report.
Site	4 characters	The Site field displays the site location of the switch that contains the CP or packlet identified in the log report.
Floor	2 digits	The Floor field displays the floor position, within the site, of the CP or packlet identified in the log report.
Row	Alphanumeric: 1 digit followed by 2 characters	The Row field identifies the row position, on the floor, that contains the CP or packlet identified in the log report.

XAC322 PETrbl (continued)

Field descriptions for PETrbl log (Sheet 3 of 4)

Field	Value	Description
Bay	DPCC:00	The Bay field identifies the bay (frame type and number) that contains the CP or packlet identified in the log report.
Shelf	2 digits	A number identifying the shelf where the CP, packlet, or device is located. Possible values are 0, 1, 2, and 3.
Slot	3 alphanumeric characters	Two digits identifying the slot number and one character identifying the side (front or rear) of the shelf. Possible values for the slot are in the range 1 to 18. Possible values for the side are F and R.
Packlet	1 character (optional)	A character identifying the packlet position (upper or lower). Possible values are U and L.
Device	1 digit (optional)	One digit identifying the number of the device (0 or 1) involved in the state change. This field is displayed only if the Class of the resource involved in the state change is PORT, LINK, or TOD.
EqPEC	9 alphanumeric characters	The EqPEC field identifies the product engineering code (EqPEC) of the CP or packlet identified in the log report. If the device involved in the state change is not a CP or packlet, then the EqPEC displayed is that of the CP or packlet that is hosting the device.
Serial	14 alphanumeric characters	The Serial field identifies the serial number of the CP or packlet identified in the log report. If the device involved in the state change is not a CP or packlet, then the serial number displayed is that of the CP or packlet that is hosting the device.
REASON	Text string (optional)	The Reason field describes the cause of the condition identified in the log report. This field is not displayed if the state change was initiated by the user.
ACTION	Text string (optional)	The Action field displays the recommended action that operating company personnel can follow to correct the condition identified in the log report.

XAC322 PETrbl (end)

Field descriptions for PETrbl log (Sheet 4 of 4)

Field	Value	Description
Fault Record Id	8 hexadecimal characters (optional)	A hexadecimal identifier that references an entry in the XA-Core Fault Query Tool database. (This field is displayed only if the condition identified in the log report was caused by a recorded hardware fault.)
Cardlist	Variable field (optional)	The Cardlist field displays other CPs or packlets that operating company personnel need to check as possible sources of the fault identified in the log report. The Cardlist field displays the card or packlet weight (probability, shown as a percentage, that the CP or packlet contains a fault), card type, state, site, floor, row, bay, shelf and slot position, the product engineering code and serial number for each CP or packlet. A cardlist is displayed only if the number of CPs or packlets involved in the fault report was greater than one.

Action

Perform a manual in-service test on the PE CP that contains the fault to try and clear the fault condition.

Replace the PE CP that contains the fault during a low traffic period on the switch.

Associated OM registers

There are no OM registers associated with this log.

This page is left blank intentionally.

XAC323 SMTrbl

Explanation

The system generates the Shared Memory Trouble (SMTrbl) log report when a non-critical fault is detected on a shared memory (SM) CP. The non-critical fault causes the SM CP to change state from in-service (InSv) to in-service trouble (IsTb).

The SMTrbl log report indicates the recommended action that operating company personnel can follow to correct the condition. When the condition clears, the system generates the SMTrbl Alarm Cleared log (XAC623) report.

The SMTrbl log report generates a Card List when the system detects a fault on more than one CP or packlet. The Card List displays other CPs and packlets that operating company personnel need to check as possible sources of the fault identified in the log report.

An SMTrbl log indicates an **SMtrbl Minor alarm** condition. This alarm condition means that a non-critical fault was detected on a SM CP. The SM CP has changed state from InSv to IsTb

Event Type

Trouble (TBL)

Format

The format for log XAC323 follows:

```
Severity XACnnn mmmdd hh:mm:ssssdd Event Type  Log Title
    IMPACT:  <System Impact Statement>
    DESCRIPTION: State has changed from OldState to NewState by Init. action
    Class:     Type State Site  FL  Row  Bay    Shf/Slt/Pk   EqPEC/Serial
               cccc cccc  cccc  nn  cnn  cccc:nn nn nns  p cccnncc/nnnnnnnn
    REASON:  <Reason Statement>
    ACTION:  <Action Statement>
    FAULT RECORD ID: hhhhhhhh
    Check the following card(s) for possible source of fault.
            Weight Type Site FL Row Bay     Shf/Slt/Pk/Dv   EqPEC/Serial
            nnn% cccc cccc nn cnn cccc:nn nn nnc c  n nnnnccnn/cccccccccccc
            nnn% cccc cccc nn cnn cccc:nn nn nnc c  n nnnnccnn/cccccccccccc
             .... ..
            nnn% cccc cccc nn cnn cccc:nn nn nnc c  n nnnnccnn/cccccccccccc
```

XAC323 SMTrbl (continued)

Example

An example of log XAC323 follows:

```
**    XAC323 NOC01 15:22:28  9700  TBL   SMTrbl (Trouble)
    IMPACT:
    DESCRIPTION: State has changed from INSV to ISTB by SYSTEM action.
    CARD:      Type State Site FL Row Bay    Shf/Slt/Pk  EqPEC/Serial
                SM  IsTb  HOST 01 A00 DPCC:00 01 11F  NTLX14CA/nnnnnnnnnn
    REASON:  Non-critical XA-Core fault detected.
    ACTION:  Perform in-service test on the SM card.
```

Field descriptions

The following table explains each of the fields in log XAC323:

Field descriptions for SMTrbl log (Sheet 1 of 4)

Field	Value	Description
Severity	One asterisk (*)	Displays the severity of the associated alarm. One asterisk (*) indicates a minor alarm. A non-critical fault was detected on an SM CP. An SM CP has changed state from InSv to IsTb.
Reportid	XAC323	The Reportid field displays the log group (XAC) and identification number of the log report.
Event Type	TBL	The Event Type field displays the type of event identified in the log report.
Log title	Text string	A text string describing the title of the log report.
IMPACT	Text string	The Impact field describes the impact of the condition to the XA-Core. (This line is generated only if the state change has a negative impact.)
DESCRIPTION	Text string	A text string describing the state change. The DESCRIPTION field contains the following fields: Old State, New State, and Initiator.

XAC323 SMTrbl (continued)

Field descriptions for SMTrbl log (Sheet 2 of 4)

Field	Value	Description
OldState	4 characters	A character field identifying the “from” state. Possible values are: SYSB, CBSY, MBSY, ISTB, INSV, UNEQ, and SPLT.
NewState	4 characters	A character field identifying the “to” state. Possible values are: SYSB, CBSY, MBSY, ISTB, INSV, UNEQ, and SPLT.
Initiator (Init)	Up to 12 characters	A character field identifying the initiator of the state change. Possible values are: MANUAL, SYSTEM, RECOVERY, PROVISIONING, CLOCKEVENT, FAULT, SWACT, REX, IMGTST, MSMTCE, SREX, AUDIT, IRM, and CCMT.
Class	4 characters	The class of resource that is involved in the state change. Possible values are: CARD, PORT, LINK, and TOD.
Type	4 characters	A character field identifying the type of CP or packlet identified in the log report. This field, in conjunction with the Class field, identifies the resource involved in the state change. For example, Class Link and Type ETHR identifies an Ethernet link.
State	4 characters	The State field displays the current operational state of the CP or packlet identified in the log report.
Site	4 characters	The Site field displays the site location of the switch that contains the CP or packlet identified in the log report.
Floor	2 digits	The Floor field displays the floor position, within the site, of the CP or packlet identified in the log report.
Row	Alphanumeric: 1 digit followed by 2 characters	The Row field identifies the row position, on the floor, that contains the CP or packlet identified in the log report.
Bay	DPCC:00	The Bay field identifies the bay (frame type and number) that contains the CP or packlet identified in the log report.

XAC323 SMTrbl (continued)

Field descriptions for SMTrbl log (Sheet 3 of 4)

Field	Value	Description
Shelf	2 digits	A number identifying the shelf where the CP, packlet, or device is located. Possible values are 0, 1, 2, and 3.
Slot	3 alphanumeric characters	Two digits identifying the slot number and one character identifying the side (front or rear) of the shelf. Possible values for the slot are in the range 1 to 18. Possible values for the side are F and R.
Packlet	1 character (optional)	A character identifying the packlet position (upper or lower). Possible values are U and L.
Device	1 digit (optional)	One digit identifying the number of the device (0 or 1) involved in the state change. This field is displayed only if the Class of the resource involved in the state change is PORT, LINK, or TOD.
EqPEC	9 alphanumeric characters	The EqPEC field identifies the product engineering code (EqPEC) of the CP or packlet identified in the log report. If the device involved in the state change is not a CP or packlet, then the EqPEC displayed is that of the CP or packlet that is hosting the device.
Serial	14 alphanumeric characters	The Serial field identifies the serial number of the CP or packlet identified in the log report. If the device involved in the state change is not a CP or packlet, then the serial number displayed is that of the CP or packlet that is hosting the device.
REASON	Text string (optional)	The Reason field describes the cause of the condition identified in the log report. This field is not displayed if the state change was initiated by the user.
ACTION	Text string (optional)	The Action field displays the recommended action that operating company personnel can follow to correct the condition identified in the log report.

XAC323 SMTrbl (end)

Field descriptions for SMTrbl log (Sheet 4 of 4)

Field	Value	Description
Fault Record Id	8 hexadecimal characters (optional)	A hexadecimal identifier that references an entry in the XA-Core Fault Query Tool database. (This field is displayed only if the condition identified in the log report was caused by a recorded hardware fault.)
Cardlist	Variable field (optional)	The Cardlist field displays other CPs or packlets that operating company personnel need to check as possible sources of the fault identified in the log report. The Cardlist field displays the card or packlet weight (probability, shown as a percentage, that the CP or packlet contains a fault), card type, state, site, floor, row, bay, shelf and slot position, the product engineering code and serial number for each CP or packlet. A cardlist is displayed only if the number of CPs or packlets involved in the fault report was greater than one.

Action

Run a manual in-service test on the SM CP that contains the fault to try and clear the fault.

Replace the SM CP that contains the fault during a low traffic period on the switch.

Associated OM registers

There are no OM registers associated with this log.

This page is left blank intentionally.

XAC324 IOTrbl

Explanation

The system generates the Input/Output Trouble (IOTrbl) log report when a non-critical fault condition causes any of the following elements to change state from in-service (InSv) to in-service trouble (IsTb):

- high performance input/output processor (HIOP) circuit pack (CP)
- high performance CMIC (HCMIC) circuit pack (CP)
- input/output processor (IOP) circuit pack (CP)
- IOP packlet (RTIF, CMIC, Disk or Tape packlet)
- a link, port, or TOD clock

The IOTrbl log report indicates the recommended action that operating company personnel can follow to correct the condition. When the condition clears, the system generates the IOTrbl Alarm Cleared log (XAC624) report.

The IOTrbl log report generates a Card List when the system detects a fault on more than one CP or packlet. The Card List displays other CPs and packlets that operating company personnel need to check as possible sources of the fault identified in the log report.

A IOTrbl log report indicates an **IOtrbl Minor alarm** condition. This alarm condition means that a non-critical fault condition has caused one of the following to change state from InSv to IsTb: an HIOP CP, an HCMIC CP, an IOP CP, a packlet, a link, a port, or a TOD clock.

Event Type

Trouble (TBL)

Format

The format for log XAC324 follows:

XAC324 IOTrbl (continued)

```
Severity XACnnn mmmdd hh:mm:ssssdd Event Type  Log Title
    IMPACT:  <System Impact Statement>
    DESCRIPTION: State has changed from OldState to NewState by Init. action
    Class:     Type State Site  FL  Row  Bay    Shf/Slt/Pk   EqPEC/Serial
               cccc cccc  cccc  nn cnn  cccc:nn nn nns  p ccccnncc/nnnnnnnn
    REASON:  <Reason Statement>
    ACTION:  <Action Statement>
    FAULT RECORD ID: hhhhhhhh
    Check the following card(s) for possible source of fault.
            Weight Type Site FL Row Bay     Shf/Slt/Pk/Dv   EqPEC/Serial
            nnn% cccc cccc nn cnn cccc:nn nn nnc c  n nnnnccnn/cccccccccccc
            nnn% cccc cccc nn cnn cccc:nn nn nnc c  n nnnnccnn/cccccccccccc
             .... ..
            nnn% cccc cccc nn cnn cccc:nn nn nnc c  n nnnnccnn/cccccccccccc
```

Example

An example of log XAC324 follows:

```
*     XAC324 NOV23 15:22:28  0011  TBL   IOTrbl (Trouble)
    IMPACT:
    DESCRIPTION: State has changed from INSV to ISTB by SYSTEM action.
    CARD:      Type State Site  FL  Row  Bay    Shf/Slt/Pk  EqPEC/Serial
                IOP IsTb  HOST  01  A00 DPCC:00  01 17F  NTLX03BA/nnnnnnnnnn
    REASON:  Non-critical XA-Core fault detected.
    ACTION:  Perform in-service test on the IOP card.
```

Field descriptions

The following table explains each of the fields in log XAC324:

Field descriptions for IOTrbl log (Sheet 1 of 4)

Field	Value	Description
Severity	One asterisk (*)	Displays the severity of the associated alarm. One asterisk (*) indicates a minor alarm. A non-critical fault has caused an IOP CP, packlet, link, port or TOD clock to change state from InSv to IsTb.
Reportid	XAC324	The Reportid field displays the log group and identification number of the log report.
Event Type	TBL	The Event Type field displays the type of event identified in the log report.
Log title	Text string	A text string describing the title of the log report.
IMPACT	Text string	The Impact field describes the impact of the condition to the XA-Core. (This line is generated only if the state change has a negative impact.)
DESCRIPTION	Text string	A text string describing the state change. The DESCRIPTION field contains the following fields: Old State, New State, and Initiator.
OldState	4 characters	A character field identifying the “from” state. Possible values are: SYSB, CBSY, MBSY, ISTB, INSV, UNEQ, and SPLT.
NewState	4 characters	A character field identifying the “to” state. Possible values are: SYSB, CBSY, MBSY, ISTB, INSV, UNEQ, and SPLT.
Initiator (Init)	Up to 12 characters	A character field identifying the initiator of the state change. Possible values are: MANUAL, SYSTEM, RECOVERY, PROVISIONING, CLOCKEVENT, FAULT, SWACT, REX, IMGTST, MSMTCE, SREX, AUDIT, IRM, and CCMT.
Class	4 characters	The class of resource that is involved in the state change. Possible values are: CARD, PORT, LINK, and TOD.

XAC324 IOTrbl (continued)

Field descriptions for IOTrbl log (Sheet 2 of 4)

Field	Value	Description
Type	4 characters	A character field identifying the type of CP or packlet identified in the log report. This field, in conjunction with the Class field, identifies the resource involved in the state change. For example, Class Link and Type ETHR identifies an Ethernet link.
State	4 characters	The State field displays the current operational state of the CP or packlet identified in the log report.
Site	4 characters	The Site field displays the site location of the switch that contains the CP or packlet identified in the log report.
Floor	2 digits	The Floor field displays the floor position, within the site, of the CP or packlet identified in the log report.
Row	Alphanumeric: 1 digit followed by 2 characters	The Row field identifies the row position, on the floor, that contains the CP or packlet identified in the log report.
Bay	DPCC:00	The Bay field identifies the bay (frame type and number) that contains the CP or packlet identified in the log report.
Shelf	2 digits	A number identifying the shelf where the CP, packlet, or device is located. Possible values are 0, 1, 2, and 3.
Slot	3 alphanumeric characters	Two digits identifying the slot number and one character identifying the side (front or rear) of the shelf. Possible values for the slot are in the range 1 to 18. Possible values for the side are F and R.
Packlet	1 character (optional)	If the IsTb component is a packlet or a device on a packlet, this is a character identifying the packlet position (upper or lower). Possible values are U and L.

XAC324 IOTrbl (continued)

Field descriptions for IOTrbl log (Sheet 3 of 4)

Field	Value	Description
Device	1 digit (optional)	One digit identifying the number of the device (0 or 1) involved in the state change. This field is displayed only if the Class of the resource involved in the state change is PORT, LINK, or TOD.
EqPEC	9 alphanumeric characters	The EqPEC field identifies the product engineering code (EqPEC) of the CP or packlet identified in the log report. If the device involved in the state change is not a CP or packlet, then the EqPEC displayed is that of the CP or packlet that is hosting the device.
Serial	14 alphanumeric characters	The Serial field identifies the serial number of the CP or packlet identified in the log report. If the device involved in the state change is not a CP or packlet, then the serial number displayed is that of the CP or packlet that is hosting the device.
REASON	Text string (optional)	The Reason field describes the cause of the condition identified in the log report. This field is not displayed if the state change was initiated by the user.
ACTION	Text string (optional)	The Action field displays the recommended action that operating company personnel can follow to correct the condition identified in the log report.
Fault Record Id	8 hexadecimal characters (optional)	A hexadecimal identifier that references an entry in the XA-Core Fault Query Tool database. (This field is displayed only if the condition identified in the log report was caused by a recorded hardware fault.)

XAC324 IOTrbl (end)

Field descriptions for IOTrbl log (Sheet 4 of 4)

Field	Value	Description
Cardlist	Variable field (optional)	The Cardlist field displays other CPs or packlets that operating company personnel need to check as possible sources of the fault identified in the log report. The Cardlist field displays the card or packlet weight (probability, shown as a percentage, that the CP or packlet contains a fault), card type, state, site, floor, row, bay, shelf and slot position, the product engineering code and serial number for each CP or packlet. A cardlist is displayed only if the number of CPs or packlets involved in the fault report was greater than one.

Action

Run a manual in-service test on the CP or packlet that contains the fault to try and clear the fault.

Replace the CP or packlet that contains the fault during a low traffic period on the switch.

Associated OM registers

There are no OM registers associated with this log.

XAC325 RIBKEY Detected

Explanation

A retrofit inactive boot key (RIBkey) is a tool that Installation personnel use during an upgrade or cutover process of the XA-Core. A RIBkey connects to the local port on each of the XA-Core reset terminal interfaces (RTIF). Installation personnel remove the RIBkeys when the switch of activity (SWACT) is complete and the XA-Core is the active core.

The system generates the RIBKEY Detected log report when a RIBkey device remains connected to an RTIF port on an XA-Core that is InSv. If an XA-Core restart occurs with RIBkey devices attached to the RTIF ports, the XA-Core system cannot return to active mode.

The RIBKEY Detected log report indicates the recommended action that operating company personnel can follow to correct the condition. When the condition clears, the system generates the RIBkey Removed log (XAC625) report.

A RIBkey log indicates one of two alarm levels:

- RIBkey Major alarm: RIBkey devices remain attached to both RTIF local ports on an XA-Core that is the active core.
- RIBkey Minor alarm: A RIBkey device remains attached to one RTIF local port on an XA-Core that is the active core.

Event Type

Fault (FLT)

Format

The format for log XAC325 follows:

```
Severity XACnnn mmmdd hh:mm:ssssdd Event Type  Event Text
         IMPACT: <System Impact Statement>
         CARD: Type State Site FL Row Bay    Shf/Slot     EqPEC/Serial
               cccc cccc  cccc  nn cnn cccc:nn nn/nns  p ccccnncc/nnnnnnnn
         ACTION: <Action Statement>
```

XAC325 RIBKEY Detected (continued)

Example

An example of log XAC325 follows:

```
*      XAC325 DEC11 12:15:34  0011  RIBKEY  (RIBKEY Detected)
          IMPACT: XA-Core may not boot as active core.
          CARD: Type  State  Site  FL  Row  Bay    Shf/Slot     EqPEC/Serial
                RTIF  SysB   HOST  01  A00  DPCC:00 01/15R  U NTLX08AA/nnnnnnnn
          ACTION: Remove remaining RIBKEY (s) from XA-Core.
```

Field descriptions

The following table explains each of the fields in log XAC325:

Field descriptions for RIBKEY Detected log (Sheet 1 of 2)

Field	Value	Description
Severity	One asterisk (*)	Displays the log severity.
Reportid	XAC325he Alarm field displays the severity of the alarm condition	The Reportid field displays the log group and identification number of the log report.
Event Type	FLT	The Event Type field displays the type of event identified in the log report.
Event Text	Text string	The Event Text field describes the type of event identified in the log report.
IMPACT	Text string	The Impact field describes the impact of the condition to the XA-Core.
CARD Type	Character string	The Card Type field displays the type of circuit pack (CP) or packlet identified in the log report.
State	Character string	The State field displays the current operational state of the CP or packlet identified in the log report.
Site	HOST	The Site field displays the site location of the switch that contains the CP or packlet identified in the log report.

XAC325 RIBKEY Detected (continued)

Field descriptions for RIBKEY Detected log (Sheet 2 of 2)

Field	Value	Description
FL	Numeric	The Floor field displays the floor position, within the site, of the CP or packlet identified in the log report.
Row	Alphanumeric	The Row field identifies the row position, on the floor, that contains the CP or packlet identified in the log report.
Bay	DPCC:00	The Bay field identifies the bay (frame type and number) that contains the CP or packlet identified in the log report.
Shf/Slot	nn/nns p where: nn/=0 to 3 /nn=01 to 18 s=F or R p=U or L	The Shelf (Shf) and Slot field identify the shelf position within the bay, and slot position within the shelf, that contains the CP or packlet identified in the log report. where: nn/= the shelf position number. /nn= the slot position number. s= side position, either the front (F) side or rear (R) side of the XA-Core shelf that contains the CP. p= the packlet position, either the upper (U) or lower (L) position, within an IOP CP. (The packlet position only displays when the indicated slot and side are from an IOP CP.).
EqPEC/Serial	Alphanumeric	The EqPEC/Serial field identifies the equipment product engineering code (EqPEC) and the serial number of the CP or packlet identified in the log report.
ACTION	Text string	The Action field displays the recommended action that operating company personnel can follow to correct the condition identified in the log report.

XAC325 RIBKEY Detected (end)

Action

Remove remaining Ribkey (s) from the XA-Core.

Associated OM registers

There are no OM registers associated with this log.

XAC326 MS Link Configuration Mismatch

Explanation

The system generates the MS Link Configuration Mismatch (XAC326) log report when there is a mismatch between the expected and the actual message switch (MS) link configuration. A link configuration mismatch occurs when a CMIC link from a port on the CMIC hardware in the XA-Core shelf (an HCMIC circuit pack or an XA-Core OC-3 two-port Interface packlet) is connected to the wrong port on the OC-3 two port interface paddleboard in the message switch.

The MS Link Configuration Mismatch log report indicates the recommended action that operating company personnel can follow to correct the condition. When the condition clears, the system generates the MS Link Configuration Restored (XAC626) log report.

The MS Link Configuration Mismatch log does not indicate an alarm condition.

Event Type

Fault (FLT)

Format

The format for log XAC326 follows:

```
XACnnn   mmmdd   hh:mm:ss   ssdd    Event Type    Event Text
  IMPACT:  <System Impact Statement>
  CARD: Type  State  Site  FL  Row  Bay    Shf/Slot       EqPEC/Serial
        cccc  cccc   cccc  nn  cnn  cccc:nn  nn/nns p  ccccnncc/nnnnnnnnn
  PORT:  n
  REASON:  <Reason statement>
            SHELF  MS  CARD  PORT
   EXPECTED:  nn   nn   nn    nn
   ACTUAL:    nn   nn   nn    nn
   ACTION: <Action Statement>
```

XAC326 MS Link Configuration Mismatch (continued)

Example

An example of log XAC326 follows:

```
XAC326  NOV03  17:15:16  8800  FLT  MS Link Configuration Mismatch
  IMPACT: Possible loss of messaging.
  CARD: Type  State  Site  FL  Row  Bay    Shf/Slot      EqPEC/Serial
        CMIC  InSv   HOST  00  A00  DPCC:00  01/15R L  NTLX05AA/nnnnnnnnn
  PORT: 0
  REASON: Mismatch between expected and actual MS Link Configuration.
            SHELF  MS  CARD  PORT
  EXPECTED:  0     1   24    0
  ACTUAL:    0     0   25    0
  ACTION: Check MS Link Configuration.
```

Field descriptions

The following table explains each of the fields in log XAC326:

Field descriptions for MS Link Configuration Mismatch log (Sheet 1 of 3)

Field	Value	Description
Reportid	XAC326	The Reportid field displays the log group (XAC) and identification number of the log report.
Event Type	FLT	The Event Type field displays the type of event identified in the log report.
Event Text	Text string	The Event Text field describes the type of event identified in the log report.
IMPACT	Text string	The Impact field describes the impact of the condition on the XA-Core.
CARD Type	Character string	The Card Type field displays the type of circuit pack (CP) or packlet identified in the log report.
State	Character string	The State field displays the current operational state of the CP or packlet identified in the log report.
Site	HOST	The Site field displays the site location of the switch that contains the CP or packlet identified in the log report.
FL	Numeric	The Floor field displays the floor position, within the site, of the CP or packlet identified in the log report.

XAC326 MS Link Configuration Mismatch (continued)

Field descriptions for MS Link Configuration Mismatch log (Sheet 2 of 3)

Field	Value	Description
Row	Alphanumeric	The Row field identifies the row position, on the floor, that contains the CP or packlet identified in the log report.
Bay	DPCC:00	The Bay field identifies the bay (frame type and number) that contains the CP or packlet identified in the log report.
Shf/Slot	nn/nns p where: nn/= 0 to 3 /nn=01 to 18 s=F or R p=U or L	The Shelf (Shf) and Slot field identify the shelf position within the bay, and slot position within the shelf, that contains the CP or packlet identified in the log report. where: nn/=the shelf position number. /nn=the slot position number. s=side position , either the front (F) side or rear (R) side of the XA-Core shelf that contains the CP. p=the packlet position, either the upper (U) or lower (L) position, within an IOP CP. (The packlet position displays only if the CMIC link is supported by an OC-3 two port packlet.)
EqPEC/Serial	Alphanumeric	The EqPEC/Serial field identifies the equipment product engineering code (EqPEC) and the serial number of the CP or packlet identified in the log report.
PORT	0 to 1	The Port field indicates the port number on the CMIC packlet.
REASON	Text string	The Reason field describes the cause of the condition reported in the log report.
EXPECTED	Character string	The Expected field indicates the expected MS Link configuration. This field identifies the expected MS shelf number, MS, MS Card number and MS port number.

XAC326 MS Link Configuration Mismatch (end)

Field descriptions for MS Link Configuration Mismatch log (Sheet 3 of 3)

Field	Value	Description
ACTUAL	Character string	The Actual field indiciates the actual MS Link configuration. This field identifies the actual MS shelf number, MS, MS Card number and MS port number.
SHELF	0 to 3	The shelf field identifies the shelf position number on the MS.
MS	0 or 1	The MS field identifies the MS.
CARD	Character string	The Card field identifies the shelf slot number on the MS.
PORT	0 or 1	The MS Port field identifies the port number on the MS.
ACTION	Text string	The Action field displays the recommended action that operating company personnel can follow to correct the condition identified in the log report.

Action

Check the MS Link Configuration.

Associated OM registers

There are no OM registers associated with this log.

XAC327 WgSlot (Card Inserted into Wrong Slot)

Explanation

Operating company personnel must insert the correct circuit pack (CP) in the XA-Core shelf slot matched for the CP type. The system can detect the wrong type of CP in a shelf slot in real time (The system detects a clock signal from the CP) or during a software audit.

The system generates the WgSlot (Card Inserted Into Wrong Slot) log report when software detects the insertion of a CP into the wrong shelf slot in real-time (The system detects a clock signal from the CP).

The WgSlot (Card Inserted Into Wrong Slot) log report indicates the recommended action that operating company personnel can follow to correct the condition. When the condition clears, the system generates the WgSlot Cleared (Card Removed) log (XAC627) report.

The WgSlot (Card Inserted Into Wrong Slot) log report indicates a **WgSlot Minor alarm** condition. This alarm condition means that a CP was inserted into the wrong shelf slot in real-time (The system detects a clock signal from the CP).

Event Type

Fault (FLT)

Format

The format for log XAC327 follows:

```
Severity XACnnn  mmmdd  hh:mm:ss  nnnn  Event Type   Event Text
           DESCRIPTION:<Description Statement>
           Shf   Slot  Side  TYPE   PEC
           nn     nn    c    cccc   cccccccc
           ACTION: <Action statement>
```

Example

An example of log XAC327 follows:

XAC327 WgSlot (Card Inserted into Wrong Slot) (continued)

```
*   XAC327 NOV02 13:45:56  1700  FLT  WgSlot (Card Inserted Into Wrong
Slot)
       DESCRIPTION: Card detected in the following unprovisioned slot.
       Shf  Slot  Side  TYPE  PEC
       00   12    F     PE   NTLX02AA
       ACTION: Remove the card
```

Field descriptions

The following table explains each of the fields in log XAC327:

Field descriptions for WgSlot (Card Inserted Into Wrong Slot) log (Sheet 1 of 2)

Field	Value	Description
Severity	One asterisk (*)	Displays the severity of the associated alarm. One asterisk (*) indicates a minor alarm. A CP was inserted into the wrong shelf slot in real-time.
Reportid	XAC327	The Reportid field displays the log group and identification number of the log report.
Event Type	FLT	The Event Type field displays the type of event identified in the log report.
Event Text	Text string	The Event Text field describes the type of event identified in the log report.
DESCRIPTION	Text string	The Description field describes the condition identified in the log report.
Shf	0 to 3	The Shelf (Shf) field identifies the XA-Core shelf position.
Slot	01 to 18	The Slot field identifies the slot position, within the shelf, that contains the CP identified in the log report.
Side	F or R	The Side field identifies the front (F) side or rear (R) side of the shelf that contains the slot.
TYPE	Character string	The TYPE field identifies the type of CP detected in the shelf slot.

XAC327 WgSlot (Card Inserted into Wrong Slot) (end)

Field descriptions for WgSlot (Card Inserted Into Wrong Slot) log (Sheet 2 of 2)

Field	Value	Description
PEC	Alphanumeric	The PEC field displays the product engineering code of the CP detected in the slot.
Action	Text string	The Action field displays the recommended action that operating company personnel can follow to correct the condition identified in the log report.

Action

Remove the card.

Associated OM registers

There are no OM registers associated with this log.

This page is left blank intentionally.

XAC329 Ethernet

Explanation

The system generates the Ethernet log (XAC329) report when any of the following conditions occur

- There is a loss of communication between the XA-Core and the ethernet network as a result of any single link failure.
- There is a loss of ethernet link redundancy.
- IP routing and maintenance (IRM) disables the link as a result of a problem that occurs while trying to bring the link into service.
- Failure to set active IP address on link because one or more of the active IP addresses entered in table CMIPADDR could not be bound onto the ethernet packlet.
- The IRM comm audit has failed on the link because the comm audit on the ethernet link has detected a problem with the connection to the edge device.

An Ethernet log report indicates a ETHR alarm condition.

Event Type

Fault (FLT)

Format

The format for log XAC329 follows:

```
Severity XACnnn mmmdd hh:mm:ssssdd Event Type  Log Title
    IMPACT:  <System Impact Statement>
    DESCRIPTION: State has changed from OldState to NewState by Init. action
    Class:     Type State Site  FL  Row  Bay    Shf/Slt/Pk   EqPEC/Serial
               cccc cccc  cccc  nn  cnn  cccc:nn nn nns  p ccccnncc/nnnnnnnn
    REASON:  <Reason Statement>
    ACTION:  <Action Statement>
    FAULT RECORD ID: hhhhhhhh
    Check the following card(s) for possible source of fault.
            Weight Type Site FL Row Bay     Shf/Slt/Pk/Dv   EqPEC/Serial
            nnn% cccc cccc nn cnn cccc:nn nn nnc c  n nnnnccnn/cccccccccccc
            nnn% cccc cccc nn cnn cccc:nn nn nnc c  n nnnnccnn/cccccccccccc
             .... ..
            nnn% cccc cccc nn cnn cccc:nn nn nnc c  n nnnnccnn/cccccccccccc
```

XAC329 Ethernet (continued)

Example

An example of log XAC329 follows:

```
**    XAC329 OCT29 15:22:28  1199  FLT   ETHR (Ethernet)
    IMPACT:  2 of 4 Ethernet links on XA-CORE are in-service .
    DESCRIPTION: State has changed from INSV to MANB by MANUAL action.
    CARD:      Type State Site FL Row Bay    Shf/Slt/Pk   EqPEC/Serial
                ETHRManB  HOST  01 A00 DPCC:00  00 14R L NTLX09AA/nnnnnnnnnn
    REASON:  Ethernet link(s) are out of service due to manually busied packlet.
    ACTION:  Attempt to RTS ETHR packlet.
    FAULT RECORD ID: 12345678
```

Field descriptions

The following table explains each of the fields in log XAC329

Field descriptions for Ethernet log (Sheet 1 of 4)

Field	Value	Description
Severity	Three asterisks (***) Two asterisks (**)	Displays the severity of the associated alarm. Three asterisks (***) indicate a critical alarm condition. There are insufficient links in service to maintain the engineered capacity. This can indicate a loss of call origination at the Call Server. Two asterisks (**) indicate a major alarm condition. The minimum number of ethernet links remain in-service. There is a loss of link redundancy.
Reportid	XAC329	The reportid field displays the log group (XAC) and identification number of the log report.
Event Type	FLT	The Event Type field displays the type of event identified in the log report.
Log title	Text string	A text string describing the title of the log report.
IMPACT	Text string	The Impact field describes the impact of the condition to the XA-Core. (This line is generated only if the state change has a negative impact.)

XAC329 Ethernet (continued)

Field descriptions for Ethernet log (Sheet 2 of 4)

Field	Value	Description
DESCRIPTION	Text string	A text string describing the state change. The DESCRIPTION field contains the following fields: Old State, New State, and Initiator.
OldState	4 characters	A character field identifying the “from” state. Possible values are: SYSB, CBSY, MBSY, ISTB, INSV, UNEQ, and SPLT.
NewState	4 characters	A character field identifying the “to” state. Possible values are: SYSB, CBSY, MBSY, ISTB, INSV, UNEQ, and SPLT.
Initiator (Init)	Up to 12 characters	A character field identifying the initiator of the state change. Possible values are: MANUAL, SYSTEM, RECOVERY, PROVISIONING, CLOCKEVENT, FAULT, SWACT, REX, IMGTST, MSMTCE, SREX, AUDIT, IRM, and CCMT.
Class	4 characters	The class of resource that is involved in the state change. Possible values are: CARD, PORT, LINK, and TOD.
Type	4 characters	A character field identifying the type of CP or packlet identified in the log report. This field, in conjunction with the Class field, identifies the resource involved in the state change. For example, Class Link and Type ETHR identifies an Ethernet link.
State	4 characters	The State field displays the current operational state of the CP or packlet identified in the log report.
Site	4 characters	The Site field displays the site location of the switch that contains the CP or packlet identified in the log report.
Floor	2 digits	The Floor field displays the floor position, within the site, of the CP or packlet identified in the log report.
Row	Alphanumeric: 1 digit followed by 2 characters	The Row field identifies the row position, on the floor, that contains the CP or packlet identified in the log report.

XAC329 Ethernet (continued)

Field descriptions for Ethernet log (Sheet 3 of 4)

Field	Value	Description
Bay	DPCC:00	The Bay field identifies the bay (frame type and number) that contains the CP or packlet identified in the log report.
Shelf	2 digits	A number identifying the shelf where the CP, packlet, or device is located. Possible values are 0, 1, 2, and 3.
Slot	3 alphanumeric characters	Two digits identifying the slot number and one character identifying the side (front or rear) of the shelf. Possible values for the slot are in the range 1 to 18. Possible values for the side are F and R.
Packlet	1 character (optional)	If the ethernet links are supported by ethernet packlets, this is a character identifying the packlet position (upper or lower). Possible values are U and L. If the links are supported by HIOP or HCMIC circuit packs, the field is blank.
Device	1 digit (optional)	One digit identifying the number of the device (0 or 1) involved in the state change. This field is displayed only if the Class of the resource involved in the state change is PORT, LINK, or TOD.
EqPEC	9 alphanumeric characters	The EqPEC field identifies the product engineering code (EqPEC) of the CP or packlet identified in the log report. If the device involved in the state change is not a CP or packlet, then the EqPEC displayed is that of the CP or packlet that is hosting the device.
Serial	14 alphanumeric characters	The Serial field identifies the serial number of the CP or packlet identified in the log report. If the device involved in the state change is not a CP or packlet, then the serial number displayed is that of the CP or packlet that is hosting the device.
REASON	Text string (optional)	The Reason field describes the cause of the condition identified in the log report. This field is not displayed if the state change was initiated by the user.

XAC329 Ethernet (continued)

Field descriptions for Ethernet log (Sheet 4 of 4)

Field	Value	Description
ACTION	Text string (optional)	The Action field displays the recommended action that operating company personnel can follow to correct the condition identified in the log report.
Fault Record Id	8 hexadecimal characters (optional)	A hexadecimal identifier that references an entry in the XA-Core Fault Query Tool database. (This field is displayed only if the condition identified in the log report was caused by a recorded hardware fault.)
Cardlist	Variable field (optional)	The Cardlist field displays other CPs or packlets that operating company personnel need to check as possible sources of the fault identified in the log report. The Cardlist field displays the card or packlet weight (probability, shown as a percentage, that the CP or packlet contains a fault), card type, state, site, floor, row, bay, shelf and slot position, the product engineering code and serial number for each CP or packlet. A cardlist is displayed only if the number of CPs or packlets involved in the fault report was greater than one.

Action

If the state of the ethernet hardware supporting the ethernet link (an ethernet packlet or an HIOP circuit pack or an HCMIC circuit pack) is ManB, attempt to return it to service. Replace if faulty.

If the ethernet packlet state is Cbsy because an Input/Output Processor (IOP) circuit pack (CP) is out-of-service, ensure the identified IOP circuit is in-service.

If the state of the ethernet hardware supporting the ethernet link (an ethernet packlet or an HIOP circuit pack or an HCMIC circuit pack) is SysB, attempt to return it to service. Replace if faulty.

If the state of the ethernet hardware supporting the ethernet link (an ethernet packlet or an HIOP circuit pack or an HCMIC circuit pack) is in-service (InSv)

XAC329 Ethernet (end)

or in-service trouble (Istb), perform an in-service test on the affected hardware. Replace if faulty.

If the state of the ethernet hardware supporting the ethernet link (an ethernet packlet or an HIOP circuit pack or an HCMIC circuit pack) is unknown and a state change has occurred on the ethernet hardware or on a port or link, ensure that the ethernet hardware InSv. Check the integrity of the ethernet links.

If an ethernet port or link state is ManB, attempt to return to service the ethernet port or link.

If an ethernet port or link state is SysB, contact next level of support if problem persists.

If the XA-Core system is in split mode, take no action. The ethernet hardware (an ethernet packlet or an HIOP circuit pack or an HCMIC circuit pack), port and link will return to service when the system exits split mode.

If the link continues to be disabled by IRM, contact your next level of support.

If failure to set active IP address on the link continues, contact your next level of support.

If IRM comm audit continues to fail on the link, contact your next level of support.

Associated OM registers

The OM register XETHRMJU or XETHRCRU are pegged depending on a the level of alarm generated.

The OM register XETHR, XETHRPRT or XETHRLNK are pegged based on hardware fault notifications received for ethernet packlets, ports or links.

XAC330 Firmware Mismatch

Explanation

The system generates log report XAC330 when it detects a firmware (FW) mismatch. The firmware version of the field replaceable unit (FRU) and the current version recorded in XAFWLOAD data schema table do not match.

A Firmware Mismatch log report indicates an FWvers Major alarm condition. This alarm indicates a firmware mismatch.

Format

The format for log report XAC330 follows.

```
Severity XACnnn mmmdd hh:mm:ss ssdd Event Type Log Title
IMPACT: Wrong FW version on a <FRU type><card/packlet>
CARD: Type State Site FL Row Bay     Shf/Slot EqPEC/Serial
<FRU> <state> <location> <shelf>/<slot><side> <PEC>/<#>
REASON: FW version on card is <actualFW>, should be<table_entryFW>.
ACTION: Upgrade the firmware.
```

Example

An example of log report XAC330 follows.

```
**  XAC330 OCT27 18:29:47 8300 FLT FW version mismatch
      IMPACT: Wrong FW version on a IOP card
      CARD: Type State Site FL Row Bay     Shf/Slot EqPEC/Serial
          IOP  InSv  HOST 01 A00 DPCC:00  00/17F NTLX03BA/Not avail
      REASON: FW version on card is XAIO01AA, should be XAIO01AG.
      ACTION: Upgrade the firmware.
```

Field descriptions

The following table explains each of the fields in the log report:

Field	Value	Description
Severity	One, two, or three asterisks, or blank	Displays the log severity.
Reportid	XAC330	The Reportid field displays the log group (XAC) and identification number of the log report.

XAC330 Firmware Mismatch (continued)

Field	Value	Description
Event Type	FLT	The Event Type field displays the type of event identified in the log report.
Log title	Text string	A text string describing the title of the log report.
IMPACT	Text string	The Impact field describes the impact of the condition to the XA-Core.
<FRU>	character string	Indicates the FRU type PE, IOP, HIOP, CMIC, ETHR, or AMDI.
<state>	character string	Indicates the FRU state is InSv, SysB, ManB, CBsy or ISTb.
<location>	character string	Indicates the location of XA-Core.
<shelf>	integers	Indicates the shelf number. The shelf number is 0, 1, 2 or 3.
<slot>	integers	Indicates the slot number.
<side>	character string	Indicates the slot side is front or rear.
<PEC>	alphanumeric	Indicates the FRU product engineering code in the format NTLXxxxx.
<#>	numeric	Indicates the FRU serial number.
<actualFW>	character string	Indicates the actual FRU FW version.
<table_entryFW>	character string	Indicates the FW version datafill in the XAFWLOAD data schema table.

Action

Check the datafill in the XAFWLOAD data schema table. If the firmware version recorded in the data schema table is correct, upgrade the firmware.

Related OM registers

None.

XAC330 Firmware Mismatch (end)

Additional information

The system compares the FW version from the FRU and the FW version recorded in the XAFWLOAD data schema table when one of the following actions occur:

- Operating company personnel manually issue a query card command.
- The system performs an audit and automatically queries the card.

This page is left blank intentionally.

XAC333 Firmware Loading Failure

Explanation

The system generates the log XAC333 if the firmware (FW) loading process fails. The following descriptions apply:

- New FW fails to load and there is no valid FW in FLASH.
- New FW fails to load and the system recovers the old firmware.

Format

The format for log report XAC333 follows.

```
Severity  XACnnn mmmdd hh:mm:ss ssdd Event Type  Log Title
      IMPACT: LoadFW command failed.
      CARD: Type State Site FL Row Bay     Shf/Slot      EqPEC/Serial
          <FRU> <state> <location> <shelf>/<slot><side> <PEC>/<#>
      REASON: <Reason statement>
      ACTION: <Action statement>
```

Example

Examples of log report XAC333 follow.

```
 **  XAC333 OCT27 18:02:06 7300 FLT FW loading failed
     IMPACT: LoadFW command failed.
     CARD: Type State Site FL Row Bay     Shf/Slot      EqPEC/Serial
          PE  ManB  HOST 01 A00 DPCC:00  00/04F    NTLX02AA/Not available
     REASON: FW not compatible with card type
     ACTION: NO VALID FW IN FLASH!
          Load previous version of FW. Execute LoadFW current.

*  XAC333 OCT27 18:01:46 6800 FLT  FW loading failed
     IMPACT: LoadFW command failed.
     CARD: Type State Site FL Row Bay     Shf/Slot      EqPEC/Serial
          PE  ManB  HOST 01 A00 DPCC:00  00/04F    NTLX02AA/Not available
     REASON: FW not compatible with card type
     ACTION: RTS the card.
          Contact next level of support.
```

XAC333 Firmware Loading Failure (continued)

Field descriptions

The following table explains each of the fields in the log report:

Field	Value	Description
Severity	One, two, or three asterisks, or blank	Displays the log severity.
Reportid	XAC333	The Reportid field displays the log group (XAC) and identification number of the log report.
Event Type	FLT	The Event Type field displays the type of event identified in the log report.
Log title	Text string	A text string describing the title of the log report.
IMPACT	Text string	The Impact field describes the impact of the condition to the XA-Core.
<FRU>	character string	Indicates the FRU type is PE, IOP or CMIC.
<state>	character string	Indicates the FRU state is InSv, SysB, ManB, CBsy or ISTb.
<location>	character string	Indicates the location of XA-Core.
<shelf>	integer	Indicates the shelf number is 0, 1, 2 or 3.
<slot>	integer	Indicates the slot number is 2 to 17.
<side>	character string	Indicates the slot side is front or rear.
<PEC>	alphanumeric	FRU product engineering code NTLXxxxx in format.
<#>	numeric	Indicates the FRU serial number.

Reason

The reason field provides the specific reason for the failure of the LoadFW command. The following table lists the reasons that can be displayed.

Reasons for the failure of the LoadFW command (Sheet 1 of 2)

Bank not programmable
File is nonexistent
Invalid fru location

XAC333 Firmware Loading Failure (continued)

Reasons for the failure of the LoadFW command (Sheet 2 of 2)

Memory allocation failed
No problems were detected
Resource unavailable
Table entry not found
Unknown file type
Unknown hardware type
Unreadable file
Volume nonexistent
Firmware mismatch detected
Firmware soaking in progress
FW not compatible with card type
Obsolete FW
Copy FW to SM failed
Copy FW to SM failed: bad FW load
Copy FW to SM failed: could not extract FW from file
Copy FW to SM failed: could not read FW from other card
Bank erase failed
Bank erase failed: no communication with card
Bank erase failed: timeout
Bank program failed
Bank program failed: no communication with card
Bank program failed: timeout
Test failed
Test failed: no communication with card
Test failed: could not reset card
Test failed: could not swap banks
FW Upgrade aborted with roll back
FW Upgrade aborted with NO roll back
FW Upgrade failed with roll back
Packlet setup failed
FW Upgrade NOT supported

XAC333 Firmware Loading Failure (end)

Action

If the action reports NO VALID FW IN FLASH, load the FW manually.

If the action reports FW version could not be loaded, return the FRU into service and contact the next level of support.

If the impact text of the log reports that the LoadFW command was rejected, follow the instructions recorded in the reason and action text. Check the XAFWLOAD table datafill.

Related OM registers

None.

XAC337 Baseln Alarm Raised

Explanation

The system generates the Baseln Alarm Raised log report when either of the following things occurs:

- The system raises the Baseln major alarm, indicating that it has detected an item of hardware or firmware that is incompatible with the baseline and exception-list information in tables FWINV and PECINV.
- The Baseln major alarm is already raised, but the system has detected a change in the list of non-baseline items in the system. For example, the system has detected that a new non-baseline item has been added, or it has detected that an item that was previously non-baseline has been fixed, but one or more other non-baseline items still remain.

Event Type

Fault (FLT)

XAC337 Baseln Alarm Raised (continued)

Format

The format for log XAC337 follows:

```
 Severity  XAC337  mmmdd  hh:mm:ss  ssdd  Event Type  Log Title
Card/packlets below have non-baseline HW and/or FW.
Investigate items with “N*” or U* in OK column.
             - HW vs. PECINV - -- Firmware vs. FWINV --
Type FRU     PEC+Release BL OK Typ Version  Baseline OK
---- ------- ----------- -- -- --- -------- -------- --
aaaa aaaaaaa aaaaaaaaaaa aa aa aaa aaaaaaaa aaaaaaaa aa
aaaa aaaaaaa aaaaaaaaaaa aa aa aaa aaaaaaaa aaaaaaaa aa
aaaa aaaaaaa aaaaaaaaaaa aa aa aaa aaaaaaaa aaaaaaaa aa
.
.
.
```

Example

An example of log XAC337 follows:

```
XASKY07GH  **    XAC337  JAN15  22:55:48  6100  FLT  Baseln Alarm Raised
        Card/packlets below have non-baseline HW and/or FW.
        Investigate items with “N*” or U* in OK column.
                     - HW vs. PECINV - -- Firmware vs. FWINV --
        Type FRU     PEC+Release BL OK Typ Version  Baseline OK
        ---- ------- ----------- -- -- --- -------- -------- --
        HIOP 14 R    NTLX04CA 02 02 Y  FW  XHIO02AH XHIO02AH Y
                                       DLL XHIO02AI XHIO02AH N*
        PE   4 F     NTLX02DA 01 02 N* FW  XAPE02AB XAPE02AB Y
```

The example indicates the following problems:

- The HIOP circuit pack in slot 14, rear contains a DLL firmware load that is incompatible with the baseline and exception-list information for NTLX04CA, as listed in table FWINV.
- The PE circuit pack in slot 4, front is incompatible with the baseline and exception-list information for NTLX02DA, as listed in table PECINV.

XAC337 Baseln Alarm Raised (continued)

Field descriptions

The following table explains each of the fields in log XAC337:

Field descriptions for Baseln Alarm Raised log (Sheet 1 of 2)

Field	Value	Description
Severity	Two asterisks (**)	Displays the severity of the associated alarm.
Reportid	XAC337	The Reportid field displays the log group (XAC) and identification number of the log report.
Event Type	FLT	The Event Type field displays the type of event identified in the log report.
Log title	Text string: “Baseline Alarm Raised”	A text string describing the title of the log report.
Type	Text string	Identifies the type of circuit pack or packlet.
FRU	Slot: integer in the range 1 to 18 Side: F for front or R for rear Packlet-position: U for upper or L for lower	Identifies the location of the circuit pack or packlet in the XA-Core shelf, in the format: <slot> <side> <packlet-position>.
PEC+Release	PEC: six-character alphanumeric Suffix: two character alphabetic Release: two-digit alphanumeric	Identifies the hardware in the format: <PEC><suffix> <release>.
BL	Two-character alphanumeric	The baseline hardware release for the hardware, as listed in table PECINV.
OK	Y, N*, or U*	Indicates whether the hardware is compatible with the baseline and exception-list information listed in table PECINV. Y means yes. N* means no. U* means unknown, which indicates that the table does not contain an entry for the hardware item.
Typ	FW or DLL	Indicates the type of firmware load. Every hardware items that takes firmware takes an FW firmware load. Only HIOP circuit packs take DLL firmware loads as well.

XAC337 Baseln Alarm Raised (end)

Field descriptions for Baseln Alarm Raised log (Sheet 2 of 2)

Field	Value	Description
Version	Eight-character alphanumeric	Identifies the firmware load that is currently in the hardware item.
Baseline	Eight-character alphanumeric	The baseline firmware load for the hardware, as listed in table FWINV.
OK	Y, N*, or U*	Indicates whether the current firmware is compatible with the baseline and exception-list information listed in table FWCINV. Y means yes. N* means no. U* means unknown, which indicates that the table does not contain an entry listing the firmware for the hardware item.

Action

Investigate to find out which hardware and/or firmware is incompatible with the baseline and exception-list information in tables FWINV and PECINV. For instructions on how to investigate, see the procedure for clearing a Baseln major alarm. The procedure is in the *XA-Core Maintenance Manual*, 297-8991-510.

Update the hardware or firmware as required.

Associated OM registers

There are no associated OM registers for this log.

XAC400 XA-Core Summary Report

Explanation

The system generates the XA-Core Summary Report log (XAC400) to provide a summary of performance and maintenance information about the XA-Core for a 24-hour period.

Format

The format for log report XAC400 follows.

```
XAC400 mmmdd hh:mm:ss ssdd INFO XA-Core Summary Report
    TOTAL TRAPS IN LAST 24 HOURS: n
    AVERAGE TRAPS PER MINUTE:     n
    LAST RESTART:  MANUAL  RELOAD   mmm-dd hh:mm:ss

    FAULT EVENT COUNTERS FOR LAST 24 HOUR PERIOD
    ==================================================
     PE Fault Events      :    n
     SM Fault Events      :    n
     IOP Fault Events     :    n
     DISK Fault Events    :    n
     TAPE Fault Events    :    n
     RTIF Fault Events    :    n
     Loc Port Fault Events:    0
     Rem Port Fault Events:    n
     CMIC Fault Events    :    n
     SYSTEM WARM restarts :    n
     MANUAL WARM Restarts :    n
     SYSTEM COLD Restarts :    n
     MANUAL COLD Restarts :    n
     XAC Trap Events      :    n

    CURRENTLY DISABLED XA-CORE ALARMS
    ==================================================
     <alarm> <alarm>

    CURRENTLY SOAKING FW
    ==================================================
     <card> <slot> <side> <packlet position>
     <card> <slot> <side> <packlet position>
     <card> <slot> <side> <packlet position>
     <card> <slot> <side> <packlet position>
```

Example

An example of log report XAC400 follows.

XAC400 XA-Core Summary Report (continued)

```
XAC400 OCT27 00:00:00 5600 INFO XA-Core Summary Report
    TOTAL TRAPS IN LAST 24 HOURS: 0
    AVERAGE TRAPS PER MINUTE:     0

    LAST RESTART:  MANUAL  RELOAD   OCT-26 18:04:15
    FAULT EVENT COUNTERS FOR LAST 24 HOUR PERIOD
    ==================================================
     PE Fault Events      :    2
     SM Fault Events      :    0
     IOP Fault Events     :    3
     DISK Fault Events    :    0
     TAPE Fault Events    :    0
     RTIF Fault Events    :    0
     Loc Port Fault Events:    0
     Rem Port Fault Events:    0
     CMIC Fault Events    :    1
     SYSTEM WARM restarts :    0
     MANUAL WARM Restarts :    0
     SYSTEM COLD Restarts :    0
     MANUAL COLD Restarts :    0
     XAC Trap Events      :    0

    CURRENTLY DISABLED XA-CORE ALARMS
    ==================================================
     FWsoak          FWvers

    CURRENTLY SOAKING FW
    ==================================================
     CMIC  4  rear   lower
```

Field descriptions

The following table explains each of the fields in the log report:

Field	Value	Description
Reportid	Alphanumeric	Indicates the log group (XAC) and identification number of the log.
Event Type	Character string	Indicates the type of event identified in the log report.
Event Text	Text string	Indicates describes the type of event identified in the log report.
TOTAL TRAPS IN THE LAST 24 HOURS	Numeric	Indicates the total number of TRAPS detected in the last 24 hours.
AVERAGE TRAPS PER MINUTE	Numeric	Indicates the average number of TRAPS detected per minute.

XAC400 XA-Core Summary Report (continued)

Field	Value	Description
LAST RESTART	intitiator=MANUAL, or SYSTEM restart type=WARM, COLD, or RELOAD yyyy/mm/dd hh:mm:ss.nnn ccc.	This field displays the following information about the last restart: initiator=The trigger that began the last restart can either be MANUAL or SYSTEM restart. restart type =The type of restart can be WARM, COLD, or RELOAD restart. yyyy/mm/dd=The year, month and day of the last restart. hh:mm:ss.nnn ccc.=The hour, minute, second, millisecond, and day of the last restart.
FAULT EVENT COUNTERS FOR LAST 24 HOUR PERIOD	Numeric	Indicates the number of XA-Core events for the last 24 hour period. The system counts the following events for the last 24 hour period: PE Fault Events SM Fault Events IOP, HIOP, and HCMIC Fault Events DISK Fault Events TAPE Fault Events RTIF Fault Events CMIC Fault Events SYSTEM WARM Restarts MANUAL WARM Restarts SYSTEM COLD Restarts MANUAL COLD Restarts XAC Trap Events

XAC400 XA-Core Summary Report (end)

Field	Value	Description
CURRENTLY DISABLED XA-CORE ALARMS	Character string	Operating company personnel can disable XA-Core alarms from displaying at the MAP. This field displays alarms that are currently disabled.
CURRENTLY SOAKING FW	Character string	Indicates the position of the card/ packlet that is currently soaking firmware (FW).

Action

None.

Related OM registers

All of the registers in OM groups XACORE and XACSRVC are associated with this log.

Additional information

If the summary report is generated at a time when the Config minor alarm is raised, the summary report includes the following sentence: “System is still in an upgrade process mode.” (The Config minor alarm indicates that the XA-Core contains one or more NTLX02DA PE circuit packs and one or more earlier-model PE circuit packs.)

XAC413 RExSch (REx Schedule Failure)

Explanation

The system performs a daily Routine Exercise (REx) test to make sure that the XA-Core equipment is functioning correctly. The system can perform a REx test, or operating company personnel can perform a manual REx test.

The system generates the RExSch (REx Schedule Failure) log (XAC413) report when two or more consecutive system XA-Core REx tests are cancelled.

The RExSch (REx Schedule Failure) log indicates the recommended action that operating company personnel can follow to correct the condition. When the condition clears, the system generates the RExSch Alarm Cleared log (XAC613) report.

A RExSch (REx Schedule Failure) log report indicates a **RExSch Minor alarm** condition. This alarm condition means that two or more consecutive system REx tests are cancelled.

Event Type

Summary (SUMM)

Format

The format for log XAC413 follows:

```
Severity XACnnn mmmdd hh:mm:ss ssdd   Event Type   Event Text
          DESCRIPTION:<Description Statement>
          ACTION:<Action Statement>
```

Example

An example of log XAC413 follows:

XAC413 RExSch (REx Schedule Failure) (end)

```
*  XAC413 FEB13  11:02:10  0011  SUMM   RExSch  (REx Schedule)
      DESCRIPTION:  XA-Core REx has not run for 2 days
      ACTION:  Enable REx in table RExSched
```

Field descriptions

The following table explains each of the fields in log XAC413:

Field descriptions for RExSch (REx Schedule Failure) log

Field	Value	Description
Severity	One asterisk (*)	Displays the severity of the associated alarm. One asterisk (*) indicates a minor alarm condition. There is a cancellation of two or more consecutive XA-Core system REx tests.
Reportid	XAC413	The Reportid field displays the log group (XAC) and identification number of the log report.
Event Type	SUMM	The Event Type field displays the type of event identified in the log report.
Event Text	Text string	The Event Text field describes the type of event identified in the log report.
DESCRIPTION	Text string	The Description field describes the system condition identified in the log report.
ACTION	Text string	The Action field displays the recommended action that operating company personnel can follow to correct the condition identified in the log report.

Action

Run a system REx test to clear the alarm.

Associated OM registers

There are no OM registers associated with this log.

XAC415 Routine Exercise (REx) Report

Explanation

The system performs a system routine exercise (SREx) test, or operating company personnel perform a manual REx test to make sure that XA-Core hardware is functioning correctly.

The system generates the Routine Exercise (REx) Report log (XAC415) report after a REx test finishes. The REx Report log report provides operating company personnel with a summary of the REx results.

No alarm is associated with the REx Report log.

Event Type

Information (INFO)

Format

The usual format for log XAC415 is as follows:

```
XACnnn  mmmdd  hh:mm:ss   ssdd   Event Type   Event Text
   INITIATOR       CLASS         RESULT
   <cccccc>        <cccc>        <cccccc>
   Device  Position          Test    Result      Fault/Reason
   <cccc>  <cccccccccccccccc> <cccc>  <cccccc>    <ccccccccccc>
   <cccc>  <cccccccccccccccc> <cccc>  <cccccc>    <ccccccccccc>
   <cccc>  <cccccccccccccccc> <cccc>  <cccccc>    <ccccccccccc>
   <cccc>  <cccccccccccccccc> <cccc>  <cccccc>    <ccccccccccc>
   <cccc>  <cccccccccccccccc> <cccc>  <cccccc>    <ccccccccccc>
   Image Test Result: <image test result> <RExFlt raised/cleared>
```

If the system does not execute the SREx test for some reason, it uses the following alternative format to explain why:

```
XACnnn  mmmdd  hh:mm:ss   ssdd   Event Type   Event Text
   INITIATOR       CLASS         RESULT
   <cccccc>        <cccc>        <cccccc>
   Reason: <reason>
```

XAC415 Routine Exercise (REx) Report (continued)

Example

Here is an example of the usual format of log XAC415:

```
XAC415   DEC11  16:05:41 1300 INFO Routine Exercise (REx) Report
   INITIATOR       CLASS       RESULT
    Manual         Full        Passed
   Device  Position          Test    Result      Fault/Reason
   PE      12 F              InSv    Passed
   PE       6 F              InSv    Passed
   PE       5 F              InSv    Passed
   PE       4 F              InSv    Passed
   SM      10 F              InSv    Passed
   SM       8 R              InSv    Passed
   SM       9 F              InSv    Passed
   SM       8 F              InSv    Passed
   SM       7 F              InSv    Passed
   TOD     15 R L TOD0       InSv    Passed
   TOD     15 R L TOD1       InSv    Passed
   CMIC    15 R L Link0      InSv    Passed
   CMIC    15 R L Link1      InSv    Passed
   CMIC    15 R L            InSv    Passed
   RTIF    15 R U Port0      InSv    Passed
   RTIF    15 R U Port1      InSv    Passed
   RTIF    15 R U            InSv    Passed
   IOP     15 R              InSv    Passed
   AMDI    14 R   Port0      InSv    Passed
   AMDI    14 R   Port1      InSv    Passed
   ETHR    14 R   Link       InSv    Passed
   ETHR    14 R   Port       InSv    Passed
   HIOP    14 R              InSv    Passed
   AMDI     5 R   Port0      InSv    Passed
   AMDI     5 R   Port1      InSv    Passed
   ETHR     5 R   Link       InSv    Passed
   ETHR     5 R   Port       InSv    Passed
   HIOP     5 R              InSv    Passed
   TOD      4 R L TOD0       InSv    Passed
   TOD      4 R L TOD1       InSv    Passed
   CMIC     4 R L Link0      InSv    Passed
   CMIC     4 R L Link1      InSv    Passed
   CMIC     4 R              InSv    Passed
   RTIF     4 R U Port0      InSv    Passed
   RTIF     4 R U Port1      InSv    Passed
   RTIF     4 R U            InSv    Passed
   IOP      4 R              InSv    Passed
   .
   .
   .
   Image Test Result: Image OK
```

XAC415 Routine Exercise (REx) Report (continued)

Here is an example of the alternative format for log XAC415. The log states that the system did not run the REx test because an unstable PE or SM circuit pack had caused the system to raise a SysBTh major alarm.

```
XAC415   JAN12  17:06:42 1400 INFO Routine Exercise (REx) Report
   INITIATOR       CLASS       RESULT
   Manual          All         Not Run
   Reason: Components have gone SYSB in the last 48 hrs.
```

Field descriptions

The following table explains each of the fields in log XAC415:

Field descriptions for Routine Exercise (REx) Report log (Sheet 1 of 2)

Field	Value	Description
Reportid	XAC415	The Reportid field displays the log group and identification number of the log report.
Event Type	INFO	The Event Type field displays the type of event identified in the log report.
Event Text	Text string	The Event Text field describes the type of event identified in the log report.
INITIATOR	Manual or System	The Initiator field indicates if the REx test is system or manually triggered.
CLASS	All, Base, Full, IO, PE, or SM	The Class field displays the REx test class used in the REx test.
RESULT	Passed, Failed, Aborted, or Not Run	The Result field displays the result of the REx test.
Device	Text string	Identifies the circuit pack or packlet.
Position	<slot> <side> <packlet> <device> where <slot> is numeric <side> is F or R <packlet> is U or L <device> is a string	The Position field displays the position of the item being tested. The system displays a <packlet> value only if the item being tested is a packlet or a device on a packlet. The system displays a <device> value only if the item being tested is a link, port, or time-of-day device

XAC415 Routine Exercise (REx) Report (end)

Field descriptions for Routine Exercise (REx) Report log (Sheet 2 of 2)

Field	Value	Description
Test	InSv or OOS	The Test field identifies the type of REx test performed on CPs and packlets. InSv=An InSv Rex test is performed on CPs and packlets that are in-service. OOS=An OOS Rex test is performed on CPs and packlets that operating company personnel have taken out-of-service (OOS).
Result	Passed, Failed, Not Run, Aborted, or Starting	The Result field displays the results of the REx test for the equipment identified.
Fault/Reason	Fault values: Questionable, Non-Critical, Conditional, or Critical	The “Fault” displays the severity of any faults found for the CPs or packlets identified in the REx Report. The “Reason” is a string.
Image Test Result	passed, failed, not run, aborted, or starting	The Image Test Result field displays the results of an Image Test.
RExFlt raised/cleared	RExFlt alarm raised or RExFlt alarm cleared	This is an optional field. It is displayed if a RExFlt alarm is raised or cleared during a REx test.

Action

If the REx test fails, check for other XA-Core logs that report fault events for more detailed information about faults and their effect on the system.

Associated OM registers

XARXPE

XARSMPXU

XARXSM

XARXIO

XARXABRT

XARXBASE

XARXFULL

XARXALL

XAC418 Split (Entry to Split Mode Failed)

Explanation

The system issues this log to indicate that it tried to enter split mode but failed. The log also offers basic guidance for solving the problem.

When the system enters split mode, it is separated into two “sides”, and active side and an inactive side. Each side has enough PE circuit packs and SM circuit packs to function properly.

Split mode is used on several occasions, including the following:

- an image test
- during mtc swact
- during norestart swact
- during restart swact
- during loadmate
- during a One Night Process (ONP)

Entry into split mode can be ordered by the user, It can also be ordered by the system, for example, during a system REx test. If entry into split mode fails, you should understand the cause before reattempting the operation.

Event Type

Information (INFO)

Format

The format for log XAC418 follows:

```
XACnnn  mmmdd  hh:mm:ss ssdd Event Type Event Text
   DESCRIPTION: XA-Core has failed to enter Split Mode.
                Some SM and PE cards may be unavailable for call
                processing until recovery is complete.
   INITIATOR: <Initiator statement>
   REASON: <Reason Statement>
   ACTION: <Action Statement>
```

Example

An example of log XAC418 follows:

XAC418 Split (Entry to Split Mode Failed) (end)

```
XAC418  JAN18  10:39:26 2900 INFO Split (Entry to Split Mode Failed)
   DESCRIPTION: XA-Core has failed to enter Split Mode.
                Some SM and PE cards may be unavailable for call
                processing until recovery is complete.
   INITIATOR: Action initiated by a Image Test.
   REASON: PE call capacity levels are too high to support Split.
   ACTION: Check call capacity levels before reattempting Split.
```

Field descriptions

The following table explains each of the fields in log XAC418:

Field descriptions for Split (Entry to Split Mode Failed) log

Field	Value	Description
Reportid	XAC418	The Reportid field displays the log group and identification number of the log report.
Event Type	INFO	The Event Type field displays the type of event identified in the log report.
Event Text	Text string	The Event Text field describes the type of event identified in the log report.
INITIATOR	Text string	The Initiator field specifies the action that ordered entry into split mode.
REASON	Text string	The Reason field specifies the reason for the failure to enter split mode. If you do not understand the contents of this field, seek help from the next level of support.
ACTION	Text string	The Action field provides basic guidance for resolving the problem that prevented entry into split mode. If you do not understand the contents of this field, seek help from the next level of support.

Action

Resolve the problem that prevented entry into split mode. The information in the Reason and Action fields provides basic guidance about how to resolve the problem. If you do not understand the information in the Reason and Action fields, seek help from the next level of support.

Associated OM registers

There are no OM registers associated with this log.

XAC420 SysBTh Ctrl Changed

Explanation

The system generates the SysBTh Ctrl Changed log report when either of the following events occurs.

- A user resets the SysB transition counters by using the CNTRS RESET command. (The CNTRS RESET command is available in several MAP levels. For details, see the chapter titled "XA-Core MAP levels and user interfaces" in this document.)
- Nortel Networks changes the SysB-transition thresholds that govern when the system raises the SysBTh alarms.

See the description of log XAC320 in this chapter for a list of the components for which the system maintains counts of system-busy (SysB) transitions, and for a description of the conditions in which the system raises SysBTh minor and SysBTh major alarms.

Event Type

Informational (INFO)

XAC420 SysBTh Ctrl Changed (continued)

Format

The format for log XAC420 follows:

```
 XACnnn  mmmdd  hh:mm:ss  ssdd  Event Type  Log Title
  Reason: <Reason Statement>
  <Comment>
  Grp  Type Component     SysB Cnts in last N hrs       Sum  Thresh
  ---  ---- ---------     42 36 30 24 18 12 06 00       ---  ------
<Group> <Type> <Loc.>     nn nn nn nn nn nn nn nn |<Opt> nn  <nn/nn> <Sev>
```

Examples

Two examples of log XAC420 follow:

```
 XAC420  NOV06  11:33:21  0015  INFO  SysBTh Ctrl Changed
  Reason: Counters reset from command: CMIC 4 R L
  Before counters reset:
  Grp  Type Component     SysB Cnts in last N hrs       Sum  Thresh
  ---  ---- ---------     42 36 30 24 18 12 06 00       ---  ------
  IOhw CMIC  4 R L         0  0  0  0  0  0  0  1     |+  3  2/6 *
  IOlk CMIC  4 R L Link1   0  0  0  0  0  0  0  1     |   1  2/8
  IOhw RTIF  4 R U         0  0  0  0  0  0  0  1     |+  3  2/6 *
  IOhw RTIF  4 R U Remote  0  0  0  0  0  0  0  1     |+  3  2/6 *


 XAC420  NOV07  12:43:22  0010  INFO  SysBTh Ctrl Changed
  Reason: Alarm thresholds changed for: PE
  Old values: minor =  2, major =  7
  New values: minor =  2, major =  6
  Before threshold change:
  Grp  Type Component     SysB Cnts in last N hrs       Sum  Thresh
  ---  ---- ---------     42 36 30 24 18 12 06 00       ---  ------
  IOlk AMDI 13 R L Link0   1  0  0  0  0  0  0  1     |+  3  2/8 *
  IOhw ETHR 13 R L Port    0  1  0  0  0  0  0  0     |+  3  2/6 *
```

XAC420 SysBTh Ctrl Changed (continued)

Field descriptions

The following table explains each of the fields in log XAC420:

Field descriptions for the SysBTh Control Info Changed log (Sheet 1 of 2)

Field	Value	Description
Reportid	XAC420	The Reportid field displays the log group and identification number of the log report.
Event Type	INFO	The Event Type field displays the type of event identified in the log report.
Log title	Text string	A text string describing the title of the log report.
Reason	“Counters reset from command: <Group> <Slot><Side> <Position>” or “Alarm thresholds changed for: <Group>”	For a description of <Group>, see the description of the Group field in this table. For descriptions of <Slot>, <Side>, and <Position>, see the description of the Loc. field in this table.
Comment	“Before counters reset:” or “Old values: minor = <nn>, major = <nn> New values: minor = <nn>, major = <nn> Before threshold change:” where each instance of nn is an integer in the range 1 to 32767	This comment appears if the Reason field contains “Counters reset from command: <location>”. This comment appears if the Reason field contains “Alarm thresholds changed for <Group>”.
Group	PE SM IOlk IOhw	PE circuit pack SM circuit pack IO links The IOhw category includes IOP, HIOP, and HCMIC circuit packs, packlets, ports, and TOD devices.
Type	PE, SM, IOP, HIOP, Tape, Disk, RTIF, OC3, CMIC, AMDI, ETHR, TOD	Item type. OC3 is the equivalent of AMDI.

XAC420 SysBTh Ctrl Changed (end)

Field descriptions for the SysBTh Control Info Changed log (Sheet 2 of 2)

Field	Value	Description
Loc.	<Slot><Side> <Position> <Device type>	Identifies the location of the component, where <Slot> is numeric in the range 1 to 18 and <Side> is F for front or R for rear. A <Position> value appears only if the component is a packlet or a packlet's port, link, or time-of-day device. A <Device type> value appears only if the transitions were by a port, link, or TOD device.
SysB cnts in last N hrs	Eight numeric values, separated by spaces. Each is an integer in the range 0 to 15.	The number of SysB transitions occurring for the component in the current six-hour interval (the rightmost value), and in each of the seven preceding six-hour intervals. The counter for each interval can count as high as 15.
Opt	A plus sign (+) or a blank space	A plus sign (+) appears in the Opt field if the Group is IOhw, and if the value in the Sum field is a sum of transitions for multiple IOhw components that are associated with the slot.
Sum	Numeric	The sum of the SysB transitions occurring in the current six-hour interval, and in the seven preceding six-hour intervals.
Thresh	Two numeric values separated by a slash	The two numeric values separated by a slash indicate the minor and major SysB transition thresholds for the component.
Sev	One asterisk (*), two asterisks (**), or a blank space	One asterisk indicates that a SysBTh minor alarm was raised for the component before the threshold values were reset or changed. Two asterisks indicate that a SysBTh major alarm was raised for the component before the threshold values were reset or changed.

Action

There are no actions for this log.

Associated OM registers

There are no associated OM registers for this log.

XAC600 LowSM Condition Cleared

Explanation

The system generates the Low Shared Memory (LowSM) Condition Cleared log (XAC600) report when the LowSM alarm condition clears and shared memory (SM) redundancy is restored.

Event Type

Information (INFO)

Format

The format for log XAC600 follows:

```
XACnnn      mmmdd hh:mm:ss  ssdd  Event Type  Log Title
  DESCRIPTION: State has changed from OldState to NewState by Init. action
  Class:      Type State Site  FL  Row Bay    Shf/Slt/Pk   EqPEC/Serial
              cccc cccc  cccc  nn  cnn cccc:nn nn nns  p ccccnncc/nnnnnnnn
```

Example

An example of log XAC600 follows:

```
XAC600      NOV02 09:23:45  0011  INFO LowSM Condition Cleared
  DESCRIPTION: State has changed from SYSB to INSV by SYSTEM action
  CARD:       Type State Site  FL  Row Bay    Shf/Slt/Pk   EqPEC/Serial
              SM   Insv  HOST  01  A00 DPCC:00 00  10F  NTLX14CA/nnnnnnnn
```

XAC600 LowSM Condition Cleared (continued)

Field descriptions

The following table explains each of the fields in log XAC600:

Field descriptions for the LowSM Condition Cleared log (Sheet 1 of 3)

Field	Value	Description
Reportid	XAC600	The Reportid field displays the log group (XAC) and identification number of the log report.
Event Type	INFO	The Event Type field displays the type of event identified in the log report.
Log title	Text string	A text string describing the title of the log report.
DESCRIPTION	Text string	A text string describing the state change. The DESCRIPTION field contains the following fields: Old State, New State, and Initiator.
OldState	4 characters	A character field identifying the “from” state. Possible values are: SYSB, CBSY, MBSY, ISTB, INSV, UNEQ, and SPLT.
NewState	4 characters	A character field identifying the “to” state. Possible values are: SYSB, CBSY, MBSY, ISTB, INSV, UNEQ, and SPLT.
Initiator (Init)	Up to 12 characters	A character field identifying the initiator of the state change. Possible values are: MANUAL, SYSTEM, RECOVERY, PROVISIONING, CLOCKEVENT, FAULT, SWACT, REX, IMGTST, MSMTCE, SREX, AUDIT, IRM, and CCMT.
Class	4 characters	The class of resource that is involved in the state change. Possible values are: CARD, PORT, LINK, and TOD.
Type	4 characters	A character field identifying the type of CP or packlet identified in the log report. This field, in conjunction with the Class field, identifies the resource involved in the state change. For example, Class Link and Type ETHR identifies an Ethernet link.
State	4 characters	The State field displays the current operational state of the CP or packlet identified in the log report.

XAC600 LowSM Condition Cleared (continued)

Field descriptions for the LowSM Condition Cleared log (Sheet 2 of 3)

Field	Value	Description
Site	4 characters	The Site field displays the site location of the switch that contains the CP or packlet identified in the log report.
Floor	2 digits	The Floor field displays the floor position, within the site, of the CP or packlet identified in the log report.
Row	Alphanumeric: 1 digit followed by 2 characters	The Row field identifies the row position, on the floor, that contains the CP or packlet identified in the log report.
Bay	DPCC:00	The Bay field identifies the bay (frame type and number) that contains the CP or packlet identified in the log report.
Shelf	2 digits	A number identifying the shelf where the CP, packlet, or device is located. Possible values are 0, 1, 2, and 3.
Slot	3 alphanumeric characters	Two digits identifying the slot number and one character identifying the side (front or rear) of the shelf. Possible values for the slot are in the range 1 to 18. Possible values for the side are F and R.
Packlet	1 character (optional)	A character identifying the packlet position (upper or lower). Possible values are U and L.
Device	1 digit (optional)	One digit identifying the number of the device (0 or 1) involved in the state change. This field is displayed only if the Class of the resource involved in the state change is PORT, LINK, or TOD.
EqPEC	9 alphanumeric characters	The EqPEC field identifies the product engineering code (EqPEC) of the CP or packlet identified in the log report. If the device involved in the state change is not a CP or packlet, then the EqPEC displayed is that of the CP or packlet that is hosting the device.

XAC600 LowSM Condition Cleared (end)

Field descriptions for the LowSM Condition Cleared log (Sheet 3 of 3)

Field	Value	Description
Serial	14 alphanumeric characters	The Serial field identifies the serial number of the CP or packlet identified in the log report. If the device involved in the state change is not a CP or packlet, then the serial number displayed is that of the CP or packlet that is hosting the device.

Action

There are no actions for this log.

Associated OM registers

XASM

XASMCRIU

XAC601 MemLim Condition Cleared

Explanation

The system generates the Memory Limit (MemLim) Condition Cleared log (XAC601) report when the low allocatable memory condition clears. The amount of available memory-store and program-store are above the alarm thresholds.

Event Type

Information (INFO)

Format

The format for log XAC601 follows:

```
XACnnn   mmmdd  hh:mm:ss   ssdd   Event Type   Event Text
   DESCRIPTION:  <Description Statement>
```

Example

An example of log XAC601 follows:

```
XAC601   NOV03  15:23:31   0011   INFO   MemLim Condition Cleared
   DESCRIPTION:  Memory usage is now below alarm threshold.
```

Field descriptions

The following table explains each of the fields in log XAC601:

Field descriptions for MemLim Condition Cleared log

Field	Value	Description
Reportid	XAC601	The Reportid field displays the log group (XAC) and identification number of the log report.
Event Type	INFO	The Event Type field displays the type of event identified in the log report.
Event Text	Text string	The Event Text field describes the type of event identified in the log report.
DESCRIPTION	Text string	The Description field describes the system event.

Action

There are no actions for this log.

XAC601 MemLim Condition Cleared (end)

Associated OM registers

XASM

XASMCRIU

XAC602 LowPE Condition Cleared

Explanation

The system generates the Low Processor Element (LowPE) Condition Cleared log (XAC602) report when the LowPE alarm condition clears and processor element (PE) redundancy is restored.

Event Type

Information (INFO)

Format

The format for log XAC602 follows:

```
XACnnn      mmmdd hh:mm:ss  ssdd  Event Type  Log Title
  DESCRIPTION: State has changed from OldState to NewState by Init. action
  Class:      Type State Site  FL  Row Bay    Shf/Slt/Pk   EqPEC/Serial
              cccc cccc  cccc  nn  cnn cccc:nn nn nns  p cccccnncc/nnnnnnnn
```

Example

An example of log XAC602 follows:

```
XAC602      MAR22 11:45:43  5700  INFO LowPE Condition Cleared
  DESCRIPTION: State has changed from SYSB to INSV by SYSTEM action
  CARD:       Type State Site  FL  Row Bay    Shf/Slt/Pk   EqPEC/Serial
              PE   Insv  HOST  01  A00 DPCC:00 00  16F  NTLX02AA/nnnnnnnn
```

Field descriptions

The following table explains each of the fields in log XAC602:

Field descriptions for the LowPe Condition Cleared log (Sheet 1 of 3)

Field	Value	Description
Reportid	XAC602	The Reportid field displays the log group (XAC) and identification number of the log report.
Event Type	INFO	The Event Type field displays the type of event identified in the log report.
Log title	Text string	A text string describing the title of the log report.

XAC602 LowPE Condition Cleared (continued)

Field descriptions for the LowPe Condition Cleared log (Sheet 2 of 3)

Field	Value	Description
DESCRIPTION	Text string	A text string describing the state change. The DESCRIPTION field contains the following fields: Old State, New State, and Initiator.
OldState	4 characters	A character field identifying the “from” state. Possible values are: SYSB, CBSY, MBSY, ISTB, INSV, UNEQ, and SPLT.
NewState	4 characters	A character field identifying the “to” state. Possible values are: SYSB, CBSY, MBSY, ISTB, INSV, UNEQ, and SPLT.
Initiator (Init)	Up to 12 characters	A character field identifying the initiator of the state change. Possible values are: MANUAL, SYSTEM, RECOVERY, PROVISIONING, CLOCKEVENT, FAULT, SWACT, REX, IMGTST, MSMTCE, SREX, AUDIT, IRM, and CCMT.
Class	4 characters	The class of resource that is involved in the state change. Possible values are: CARD, PORT, LINK, and TOD.
Type	4 characters	A character field identifying the type of CP or packlet identified in the log report. This field, in conjunction with the Class field, identifies the resource involved in the state change. For example, Class Link and Type ETHR identifies an Ethernet link.
State	4 characters	The State field displays the current operational state of the CP or packlet identified in the log report.
Site	4 characters	The Site field displays the site location of the switch that contains the CP or packlet identified in the log report.
Floor	2 digits	The Floor field displays the floor position, within the site, of the CP or packlet identified in the log report.
Row	Alphanumeric: 1 digit followed by 2 characters	The Row field identifies the row position, on the floor, that contains the CP or packlet identified in the log report.

XAC602 LowPE Condition Cleared (continued)

Field descriptions for the LowPe Condition Cleared log (Sheet 3 of 3)

Field	Value	Description
Bay	DPCC:00	The Bay field identifies the bay (frame type and number) that contains the CP or packlet identified in the log report.
Shelf	2 digits	A number identifying the shelf where the CP, packlet, or device is located. Possible values are 0, 1, 2, and 3.
Slot	3 alphanumeric characters	Two digits identifying the slot number and one character identifying the side (front or rear) of the shelf. Possible values for the slot are in the range 1 to 18. Possible values for the side are F and R.
Packlet	1 character (optional)	A character identifying the packlet position (upper or lower). Possible values are U and L.
Device	1 digit (optional)	One digit identifying the number of the device (0 or 1) involved in the state change. This field is displayed only if the Class of the resource involved in the state change is PORT, LINK, or TOD.
EqPEC	9 alphanumeric characters	The EqPEC field identifies the product engineering code (EqPEC) of the CP or packlet identified in the log report. If the device involved in the state change is not a CP or packlet, then the EqPEC displayed is that of the CP or packlet that is hosting the device.
Serial	14 alphanumeric characters	The Serial field identifies the serial number of the CP or packlet identified in the log report. If the device involved in the state change is not a CP or packlet, then the serial number displayed is that of the CP or packlet that is hosting the device.

Action

There are no actions for this log.

XAC602 LowPE Condition Cleared (end)

Associated OM registers

XAPE

XAPEMAJU

XAPECRIU

XAC603 MScomm Alarm Cleared

Explanation

The system generates the MScomm Alarm Cleared log (XAC603) report when the MScomm alarm condition clears. Communication between the XA-Core and the Message Switch (MS) is restored. CMIC link redundancy is restored.

Event Type

Information (INFO)

Format

The format for log XAC603 follows:

```
XACnnn      mmmdd hh:mm:ss  ssdd  Event Type  Log Title
  DESCRIPTION: State has changed from OldState to NewState by Init. action
  Class:      Type State Site  FL  Row Bay    Shf/Slt/Pk   EqPEC/Serial
              cccc cccc  cccc  nn  cnn cccc:nn nn nns  p cccccnncc/nnnnnnnn
```

Example

An example of log XAC603 follows:

```
XAC603      OCT27 15:47:38  7500  INFO MScomm Alarm Cleared
  DESCRIPTION: State has changed from SYSB to INSV by SYSTEM action
  CARD:       Type State Site  FL  Row Bay    Shf/Slt/Pk   EqPEC/Serial
              CMIC Insv  HOST  01  A00 DPCC:00 00 15R L  NTLX05AA/nnnnnnnn
```

Field descriptions

The following table explains each of the fields in log XAC603:

Field descriptions for the MScomm Alarm Cleared log (Sheet 1 of 3)

Field	Value	Description
Reportid	XAC603	The Reportid field displays the log group (XAC) and identification number of the log report.
Event Type	INFO	The Event Type field displays the type of event identified in the log report.
Log title	Text string	A text string describing the title of the log report.

XAC603 MScomm Alarm Cleared (continued)

Field descriptions for the MScomm Alarm Cleared log (Sheet 2 of 3)

Field	Value	Description
DESCRIPTION	Text string	A text string describing the state change. The DESCRIPTION field contains the following fields: Old State, New State, and Initiator.
OldState	4 characters	A character field identifying the “from” state. Possible values are: SYSB, CBSY, MBSY, ISTB, INSV, UNEQ, and SPLT.
NewState	4 characters	A character field identifying the “to” state. Possible values are: SYSB, CBSY, MBSY, ISTB, INSV, UNEQ, and SPLT.
Initiator (Init)	Up to 12 characters	A character field identifying the initiator of the state change. Possible values are: MANUAL, SYSTEM, RECOVERY, PROVISIONING, CLOCKEVENT, FAULT, SWACT, REX, IMGTST, MSMTCE, SREX, AUDIT, IRM, and CCMT.
Class	4 characters	The class of resource that is involved in the state change. Possible values are: CARD, PORT, LINK, and TOD.
Type	4 characters	A character field identifying the type of CP or packlet identified in the log report. This field, in conjunction with the Class field, identifies the resource involved in the state change. For example, Class Link and Type ETHR identifies an Ethernet link.
State	4 characters	The State field displays the current operational state of the CP or packlet identified in the log report.
Site	4 characters	The Site field displays the site location of the switch that contains the CP or packlet identified in the log report.
Floor	2 digits	The Floor field displays the floor position, within the site, of the CP or packlet identified in the log report.
Row	Alphanumeric: 1 digit followed by 2 characters	The Row field identifies the row position, on the floor, that contains the CP or packlet identified in the log report.

XAC603 MScomm Alarm Cleared (continued)

Field descriptions for the MScomm Alarm Cleared log (Sheet 3 of 3)

Field	Value	Description
Bay	DPCC:00	The Bay field identifies the bay (frame type and number) that contains the CP or packlet identified in the log report.
Shelf	2 digits	A number identifying the shelf where the CP, packlet, or device is located. Possible values are 0, 1, 2, and 3.
Slot	3 alphanumeric characters	Two digits identifying the slot number and one character identifying the side (front or rear) of the shelf. Possible values for the slot are in the range 1 to 18. Possible values for the side are F and R.
Packlet	1 character (optional)	If the CMIC links are supported by OC-3 two port interface packlets, this is a character identifying the packlet position (upper or lower). Possible values are U and L. If the links are supported by HCMIC circuit packs, the field is blank.
Device	1 digit (optional)	One digit identifying the number of the device (0 or 1) involved in the state change. This field is displayed only if the Class of the resource involved in the state change is PORT, LINK, or TOD.
EqPEC	9 alphanumeric characters	The EqPEC field identifies the product engineering code (EqPEC) of the CP or packlet identified in the log report. If the device involved in the state change is not a CP or packlet, then the EqPEC displayed is that of the CP or packlet that is hosting the device.
Serial	14 alphanumeric characters	The Serial field identifies the serial number of the CP or packlet identified in the log report. If the device involved in the state change is not a CP or packlet, then the serial number displayed is that of the CP or packlet that is hosting the device.

Action

There are no actions for this log.

XAC603 MScomm Alarm Cleared (end)

Associated OM registers

XALKMAJU

XCMIC

XCMICPRT

XCMICLNK

XAC604 TOD Alarm Cleared

Explanation

The system generates the (Time-of-Day) TOD Alarm Cleared log (XAC604) report when the TOD alarm condition clears. All TOD clocks on the MS and XA-Core are in-service.

Event Type

Information (INFO)

Format

The format for log XAC604 follows:

```
XACnnn      mmmdd hh:mm:ss  ssdd  Event Type  Log Title
  DESCRIPTION: State has changed from OldState to NewState by Init. action
  Class:     Type State Site  FL  Row Bay    Shf/Slt/Pk   EqPEC/Serial
             cccc cccc  cccc  nn  cnn cccc:nn nn nns  p cccccnncc/nnnnnnnn
```

Example

An example of log XAC604 follows:

```
XAC604      NOV27 15:48:37  1900  INFO TOD Alarm Cleared
  DESCRIPTION: State has changed from SYSB to INSV by SYSTEM action
  TOD:       Type State Site  FL  Row Bay    Shf/Slt/Pk   EqPEC/Serial
             CMIC Insv  HOST  00  A00 DPCC:00 00 05R L 0 NTLX05AA/nnnnnnnn
```

Field descriptions

The following table explains each of the fields in log XAC604:

Field descriptions for the TOD Alarm Cleared log (Sheet 1 of 3)

Field	Value	Description
Reportid	XAC604	The Reportid field displays the log group (XAC) and identification number of the log report.
Event Type	INFO	The Event Type field displays the type of event identified in the log report.
Log title	Text string	A text string describing the title of the log report.

XAC604 TOD Alarm Cleared (continued)

Field descriptions for the TOD Alarm Cleared log (Sheet 2 of 3)

Field	Value	Description
DESCRIPTION	Text string	A text string describing the state change. The DESCRIPTION field contains the following fields: Old State, New State, and Initiator.
OldState	4 characters	A character field identifying the “from” state. Possible values are: SYSB, CBSY, MBSY, ISTB, INSV, UNEQ, and SPLT.
NewState	4 characters	A character field identifying the “to” state. Possible values are: SYSB, CBSY, MBSY, ISTB, INSV, UNEQ, and SPLT.
Initiator (Init)	Up to 12 characters	A character field identifying the initiator of the state change. Possible values are: MANUAL, SYSTEM, RECOVERY, PROVISIONING, CLOCKEVENT, FAULT, SWACT, REX, IMGTST, MSMTCE, SREX, AUDIT, IRM, and CCMT.
Class	4 characters	The class of resource that is involved in the state change. Possible values are: CARD, PORT, LINK, and TOD.
Type	4 characters	A character field identifying the type of CP or packlet identified in the log report. This field, in conjunction with the Class field, identifies the resource involved in the state change. For example, Class Link and Type ETHR identifies an Ethernet link.
State	4 characters	The State field displays the current operational state of the CP or packlet identified in the log report.
Site	4 characters	The Site field displays the site location of the switch that contains the CP or packlet identified in the log report.
Floor	2 digits	The Floor field displays the floor position, within the site, of the CP or packlet identified in the log report.
Row	Alphanumeric: 1 digit followed by 2 characters	The Row field identifies the row position, on the floor, that contains the CP or packlet identified in the log report.

XAC604 TOD Alarm Cleared (continued)

Field descriptions for the TOD Alarm Cleared log (Sheet 3 of 3)

Field	Value	Description
Bay	DPCC:00	The Bay field identifies the bay (frame type and number) that contains the CP or packlet identified in the log report.
Shelf	2 digits	A number identifying the shelf where the CP, packlet, or device is located. Possible values are 0, 1, 2, and 3.
Slot	3 alphanumeric characters	Two digits identifying the slot number and one character identifying the side (front or rear) of the shelf. Possible values for the slot are in the range 1 to 18. Possible values for the side are F and R.
Packlet	1 character (optional)	If the TOD devices are on OC-3 two port interface packlets, this is a character identifying the packlet position (upper or lower). Possible values are U and L. If the TOD devices are on HCMIC circuit packs, the field is blank.
Device	1 digit (optional)	One digit identifying the number of the device (0 or 1) involved in the state change. This field is displayed only if the Class of the resource involved in the state change is PORT, LINK, or TOD.
EqPEC	9 alphanumeric characters	The EqPEC field identifies the product engineering code (EqPEC) of the CP or packlet identified in the log report. If the device involved in the state change is not a CP or packlet, then the EqPEC displayed is that of the CP or packlet that is hosting the device.
Serial	14 alphanumeric characters	The Serial field identifies the serial number of the CP or packlet identified in the log report. If the device involved in the state change is not a CP or packlet, then the serial number displayed is that of the CP or packlet that is hosting the device.

Action

There are no actions for this log.

XAC604 TOD Alarm Cleared (end)

Associated OM registers

XCMIC

XCMICPRT

XCMICLNK

XAC605 RTIF Alarm Cleared

Explanation

The system generates the Reset Terminal Interface (RTIF) Alarm Cleared log (XAC605) report when the RTIF alarm condition clears. All local and remote ports on HCMIC circuit packs or on RTIF packlets are in-service.

Event Type

Information (INFO)

Format

The format for log XAC605 follows:

```
XACnnn      mmmdd hh:mm:ss  ssdd  Event Type  Log Title
  DESCRIPTION: State has changed from OldState to NewState by Init. action
  Class:     Type State Site  FL  Row Bay    Shf/Slt/Pk   EqPEC/Serial
             cccc cccc  cccc  nn  cnn cccc:nn nn nns  p cccccnncc/nnnnnnnn
```

Example

An example of log XAC605 follows:

```
XAC605      NOV09 13:38:01  4500  INFO RTIF Alarm Cleared
  DESCRIPTION: State has changed from SYSB to INSV by SYSTEM action
  PORT:      Type State Site  FL  Row Bay    Shf/Slt/Pk   EqPEC/Serial
             RTIF Insv  HOST  01  A00 DPCC:00 00 04R U 0 NTLX08AA/nnnnnnnn
```

Field descriptions

The following table explains each of the fields in log XAC605:

Field descriptions for RTIF Alarm Cleared log (Sheet 1 of 3)

Field	Value	Description
Reportid	XAC605	The Reportid field displays the log group (XAC) and identification number of the log report.
Event Type	INFO	The Event Type field displays the type of event identified in the log report.
Log title	Text string	A text string describing the title of the log report.

XAC605 RTIF Alarm Cleared (continued)

Field descriptions for RTIF Alarm Cleared log (Sheet 2 of 3)

Field	Value	Description
DESCRIPTION	Text string	A text string describing the state change. The DESCRIPTION field contains the following fields: Old State, New State, and Initiator.
OldState	4 characters	A character field identifying the “from” state. Possible values are: SYSB, CBSY, MBSY, ISTB, INSV, UNEQ, and SPLT.
NewState	4 characters	A character field identifying the “to” state. Possible values are: SYSB, CBSY, MBSY, ISTB, INSV, UNEQ, and SPLT.
Initiator (Init)	Up to 12 characters	A character field identifying the initiator of the state change. Possible values are: MANUAL, SYSTEM, RECOVERY, PROVISIONING, CLOCKEVENT, FAULT, SWACT, REX, IMGTST, MSMTCE, SREX, AUDIT, IRM, and CCMT.
Class	4 characters	The class of resource that is involved in the state change. Possible values are: CARD, PORT, LINK, and TOD.
Type	4 characters	A character field identifying the type of CP or packlet identified in the log report. This field, in conjunction with the Class field, identifies the resource involved in the state change. For example, Class Link and Type ETHR identifies an Ethernet link.
State	4 characters	The State field displays the current operational state of the CP or packlet identified in the log report.
Site	4 characters	The Site field displays the site location of the switch that contains the CP or packlet identified in the log report.
Floor	2 digits	The Floor field displays the floor position, within the site, of the CP or packlet identified in the log report.
Row	Alphanumeric: 1 digit followed by 2 characters	The Row field identifies the row position, on the floor, that contains the CP or packlet identified in the log report.

XAC605 RTIF Alarm Cleared (continued)

Field descriptions for RTIF Alarm Cleared log (Sheet 3 of 3)

Field	Value	Description
Bay	DPCC:00	The Bay field identifies the bay (frame type and number) that contains the CP or packlet identified in the log report.
Shelf	2 digits	A number identifying the shelf where the CP, packlet, or device is located. Possible values are 0, 1, 2, and 3.
Slot	3 alphanumeric characters	Two digits identifying the slot number and one character identifying the side (front or rear) of the shelf. Possible values for the slot are in the range 1 to 18. Possible values for the side are F and R.
Packlet	1 character (optional)	If the RTIF links are supported by RTIF packlets, this is a character identifying the packlet position (upper or lower). Possible values are U and L. If the RTIF links are supported by HCMIC circuit packs, the field is blank.
Device	1 digit (optional)	One digit identifying the number of the device (0 or 1) involved in the state change. This field is displayed only if the Class of the resource involved in the state change is PORT, LINK, or TOD.
EqPEC	9 alphanumeric characters	The EqPEC field identifies the product engineering code (EqPEC) of the CP or packlet identified in the log report. If the device involved in the state change is not a CP or packlet, then the EqPEC displayed is that of the CP or packlet that is hosting the device.
Serial	14 alphanumeric characters	The Serial field identifies the serial number of the CP or packlet identified in the log report. If the device involved in the state change is not a CP or packlet, then the serial number displayed is that of the CP or packlet that is hosting the device.

Action

There are no actions for this log.

XAC605 RTIF Alarm Cleared (end)

Associated OM registers

XRTIF

XRTIFPRT

XRTIFLNK

XAIOP

XAC606 Disk Alarm Cleared

Explanation

The system generates the Disk Alarm Cleared log (XAC606) report when a Disk packlet alarm condition clears, and the Disk packlet returns-to-service.

Event Type

Information (INFO)

Format

The format for log XAC606 follows:

```
XACnnn      mmmdd hh:mm:ss  ssdd  Event Type  Log Title
  DESCRIPTION: State has changed from OldState to NewState by Init. action
  Class:     Type State Site  FL  Row  Bay    Shf/Slt/Pk   EqPEC/Serial
             cccc cccc  cccc  nn  cnn  cccc:nn nn nns  p ccccnncc/nnnnnnnn
```

Example

An example of log XAC606 follows:

```
XAC606      MAR02 09:23:19  6600  INFO Disk Alarm Cleared
  DESCRIPTION: State has changed from SYSB to INSV by SYSTEM action
  CARD:      Type State Site  FL  Row  Bay    Shf/Slt/Pk   EqPEC/Serial
             DISK Insv  HOST  01  A00  DPCC:00 00 17F L  NTLX06AA/nnnnnnnn
```

Field descriptions

The following table explains each of the fields in log XAC606:

Field descriptions for the Disk Alarm Cleared log (Sheet 1 of 3)

Field	Value	Description
Reportid	XAC606	The Reportid field displays the log group (XAC) and identification number of the log report.
Event Type	INFO	The Event Type field displays the type of event identified in the log report.
Log title	Text string	A text string describing the title of the log report.

XAC606 Disk Alarm Cleared (continued)

Field descriptions for the Disk Alarm Cleared log (Sheet 2 of 3)

Field	Value	Description
DESCRIPTION	Text string	A text string describing the state change. The DESCRIPTION field contains the following fields: Old State, New State, and Initiator.
OldState	4 characters	A character field identifying the “from” state. Possible values are: SYSB, CBSY, MBSY, ISTB, INSV, UNEQ, and SPLT.
NewState	4 characters	A character field identifying the “to” state. Possible values are: SYSB, CBSY, MBSY, ISTB, INSV, UNEQ, and SPLT.
Initiator (Init)	Up to 12 characters	A character field identifying the initiator of the state change. Possible values are: MANUAL, SYSTEM, RECOVERY, PROVISIONING, CLOCKEVENT, FAULT, SWACT, REX, IMGTST, MSMTCE, SREX, AUDIT, IRM, and CCMT.
Class	4 characters	The class of resource that is involved in the state change. Possible values are: CARD, PORT, LINK, and TOD.
Type	4 characters	A character field identifying the type of CP or packlet identified in the log report. This field, in conjunction with the Class field, identifies the resource involved in the state change. For example, Class Link and Type ETHR identifies an Ethernet link.
State	4 characters	The State field displays the current operational state of the CP or packlet identified in the log report.
Site	4 characters	The Site field displays the site location of the switch that contains the CP or packlet identified in the log report.
Floor	2 digits	The Floor field displays the floor position, within the site, of the CP or packlet identified in the log report.
Row	Alphanumeric: 1 digit followed by 2 characters	The Row field identifies the row position, on the floor, that contains the CP or packlet identified in the log report.

XAC606 Disk Alarm Cleared (end)

Field descriptions for the Disk Alarm Cleared log (Sheet 3 of 3)

Field	Value	Description
Bay	DPCC:00	The Bay field identifies the bay (frame type and number) that contains the CP or packlet identified in the log report.
Shelf	2 digits	A number identifying the shelf where the CP, packlet, or device is located. Possible values are 0, 1, 2, and 3.
Slot	3 alphanumeric characters	Two digits identifying the slot number and one character identifying the side (front or rear) of the shelf. Possible values for the slot are in the range 1 to 18. Possible values for the side are F and R.
Packlet	1 character (optional)	A character identifying the packlet position (upper or lower). Possible values are U and L.
Device	1 digit (optional)	One digit identifying the number of the device (0 or 1) involved in the state change. This field is displayed only if the Class of the resource involved in the state change is PORT, LINK, or TOD.
EqPEC	9 alphanumeric characters	The EqPEC field identifies the product engineering code (EqPEC) of the CP or packlet identified in the log report. If the device involved in the state change is not a CP or packlet, then the EqPEC displayed is that of the CP or packlet that is hosting the device.
Serial	14 alphanumeric characters	The Serial field identifies the serial number of the CP or packlet identified in the log report. If the device involved in the state change is not a CP or packlet, then the serial number displayed is that of the CP or packlet that is hosting the device.

Action

There are no actions for this log.

Associated OM registers

XADISK

This page is left blank intentionally.

XAC607 Tape Alarm Cleared

Explanation

The system generates the Tape Alarm Cleared log (XAC607) report when a Tape alarm condition clears, and the Tape packlet returns-to-service (RTS).

Event Type

Information (INFO)

Format

The format for log XAC607 follows:

```
XACnnn      mmmdd hh:mm:ss  ssdd  Event Type  Log Title
  DESCRIPTION: State has changed from OldState to NewState by Init. action
  Class:     Type State Site  FL  Row  Bay    Shf/Slt/Pk   EqPEC/Serial
             cccc cccc  cccc  nn  cnn  cccc:nn nn nns  p ccccnncc/nnnnnnnn
```

Example

An example of log XAC607 follows:

```
XAC607      MAR01 11:21:32  6400  INFO Tape Alarm Cleared
  DESCRIPTION: State has changed from SYSB to INSV by SYSTEM action
  CARD:      Type State Site  FL  Row  Bay    Shf/Slt/Pk   EqPEC/Serial
             Tape Insv  HOST  01  A00  DPCC:00 00 17F U  NTLX07AA/nnnnnnnn
```

Field descriptions

The following table explains each of the fields in log XAC607:

Field descriptions for the Tape Alarm Cleared log (Sheet 1 of 3)

Field	Value	Description
Reportid	XAC607	The Reportid field displays the log group (XAC) and identification number of the log report.
Event Type	INFO	The Event Type field displays the type of event identified in the log report.
Log title	Text string	A text string describing the title of the log report.

XAC607 Tape Alarm Cleared (continued)

Field descriptions for the Tape Alarm Cleared log (Sheet 2 of 3)

Field	Value	Description
DESCRIPTION	Text string	A text string describing the state change. The DESCRIPTION field contains the following fields: Old State, New State, and Initiator.
OldState	4 characters	A character field identifying the “from” state. Possible values are: SYSB, CBSY, MBSY, ISTB, INSV, UNEQ, and SPLT.
NewState	4 characters	A character field identifying the “to” state. Possible values are: SYSB, CBSY, MBSY, ISTB, INSV, UNEQ, and SPLT.
Initiator (Init)	Up to 12 characters	A character field identifying the initiator of the state change. Possible values are: MANUAL, SYSTEM, RECOVERY, PROVISIONING, CLOCKEVENT, FAULT, SWACT, REX, IMGTST, MSMTCE, SREX, AUDIT, IRM, and CCMT.
Class	4 characters	The class of resource that is involved in the state change. Possible values are: CARD, PORT, LINK, and TOD.
Type	4 characters	A character field identifying the type of CP or packlet identified in the log report. This field, in conjunction with the Class field, identifies the resource involved in the state change. For example, Class Link and Type ETHR identifies an Ethernet link.
State	4 characters	The State field displays the current operational state of the CP or packlet identified in the log report.
Site	4 characters	The Site field displays the site location of the switch that contains the CP or packlet identified in the log report.
Floor	2 digits	The Floor field displays the floor position, within the site, of the CP or packlet identified in the log report.
Row	Alphanumeric: 1 digit followed by 2 characters	The Row field identifies the row position, on the floor, that contains the CP or packlet identified in the log report.

XAC607 Tape Alarm Cleared (end)

Field descriptions for the Tape Alarm Cleared log (Sheet 3 of 3)

Field	Value	Description
Bay	DPCC:00	The Bay field identifies the bay (frame type and number) that contains the CP or packlet identified in the log report.
Shelf	2 digits	A number identifying the shelf where the CP, packlet, or device is located. Possible values are 0, 1, 2, and 3.
Slot	3 alphanumeric characters	Two digits identifying the slot number and one character identifying the side (front or rear) of the shelf. Possible values for the slot are in the range 1 to 18. Possible values for the side are F and R.
Packlet	1 character (optional)	A character identifying the packlet position (upper or lower). Possible values are U and L.
Device	1 digit (optional)	One digit identifying the number of the device (0 or 1) involved in the state change. This field is displayed only if the Class of the resource involved in the state change is PORT, LINK, or TOD.
EqPEC	9 alphanumeric characters	The EqPEC field identifies the product engineering code (EqPEC) of the CP or packlet identified in the log report. If the device involved in the state change is not a CP or packlet, then the EqPEC displayed is that of the CP or packlet that is hosting the device.
Serial	14 alphanumeric characters	The Serial field identifies the serial number of the CP or packlet identified in the log report. If the device involved in the state change is not a CP or packlet, then the serial number displayed is that of the CP or packlet that is hosting the device.

Action

There are no actions for this log.

Associated OM registers

XATAPE.

This page is left blank intentionally.

XAC608 Test Passed/Alarm Cleared

Explanation

The system generates the Image Alarm Cleared log (XAC608) report when an XA-Core image test passes, or when an Image Test (ImgTst) Alarm condition clears.

Event Type

Information (INFO)

Format

The format for log XAC608 follows:

```
XACnnn mmmdd    hh:mm:ssssdd     Event TypeEvent Text
```

Example

An example of log XAC608 follows:

```
XAC608 MAR06 8:26:49   6400  INFO   Image (Test Passed/Alarm Cleared)
```

Field descriptions

The following table explains each of the fields in log XAC608:

Field descriptions for Image Alarm Cleared log

Field	Value	Description
Reportid	XAC608	The Reportid field displays the log group and identification number of the log report.
Event Type	INFO	The Event Type field displays the type of event identified in the log report.
Event Text	Test Passed or Alarm Cleared	The Event Text field indicates when an XA-Core image test passes, or when an Image Test (ImgTst) alarm condition clears.

XAC608 Test Passed/Alarm Cleared (end)

Action

There are no actions for this log.

Associated OM registers

There are no OM registers associated with this log.

XAC609 AMDI Link Condition Cleared

Explanation

The system generates the AMDI Link Condition Cleared log (XAC609) report when out of service (OOS) AMDI links are returned to service and the AMDI alarm is clear.

Event Type

Information (INFO)

Format

The format for log XAC609 follows:

```
XACnnn      mmmdd hh:mm:ss  ssdd  Event Type  Log Title
  DESCRIPTION: State has changed from OldState to NewState by Init. action
  Class:      Type State Site  FL  Row Bay    Shf/Slt/Pk   EqPEC/Serial
              cccc cccc  cccc  nn  cnn cccc:nn nn nns  p cccccnncc/nnnnnnnn
```

Example

An example of log XAC609 follows:

```
XAC609      FEB27 11:02:45  6300  INFO AMDI (AMDI Link Condition Cleared)
  DESCRIPTION: State has changed from SYSB to INSV by SYSTEM action
  LINK:       Type State Site  FL  Row Bay    Shf/Slt/Pk   EqPEC/Serial
              AMDI Insv  HOST  00  A00 DPCC:00 00 04R L 0 NTLX05BA/nnnnnnnn
```

Field descriptions

The following table explains each of the fields in log XAC609:

Field descriptions for the AMDI Link Condition Cleared log (Sheet 1 of 3)

Field	Value	Description
Reportid	XAC609	The Reportid field displays the log group (XAC) and identification number of the log report.
Event Type	INFO	The Event Type field displays the type of event identified in the log report.
Log title	Text string	A text string describing the title of the log report.

XAC609 AMDI Link Condition Cleared (continued)

Field descriptions for the AMDI Link Condition Cleared log (Sheet 2 of 3)

Field	Value	Description
DESCRIPTION	Text string	A text string describing the state change. The DESCRIPTION field contains the following fields: Old State, New State, and Initiator.
OldState	4 characters	A character field identifying the “from” state. Possible values are: SYSB, CBSY, MBSY, ISTB, INSV, UNEQ, and SPLT.
NewState	4 characters	A character field identifying the “to” state. Possible values are: SYSB, CBSY, MBSY, ISTB, INSV, UNEQ, and SPLT.
Initiator (Init)	Up to 12 characters	A character field identifying the initiator of the state change. Possible values are: MANUAL, SYSTEM, RECOVERY, PROVISIONING, CLOCKEVENT, FAULT, SWACT, REX, IMGTST, MSMTCE, SREX, AUDIT, IRM, and CCMT.
Class	4 characters	The class of resource that is involved in the state change. Possible values are: CARD, PORT, LINK, and TOD.
Type	4 characters	A character field identifying the type of CP or packlet identified in the log report. This field, in conjunction with the Class field, identifies the resource involved in the state change. For example, Class Link and Type ETHR identifies an Ethernet link.
State	4 characters	The State field displays the current operational state of the CP or packlet identified in the log report.
Site	4 characters	The Site field displays the site location of the switch that contains the CP or packlet identified in the log report.
Floor	2 digits	The Floor field displays the floor position, within the site, of the CP or packlet identified in the log report.
Row	Alphanumeric: 1 digit followed by 2 characters	The Row field identifies the row position, on the floor, that contains the CP or packlet identified in the log report.

XAC609 AMDI Link Condition Cleared (continued)

Field descriptions for the AMDI Link Condition Cleared log (Sheet 3 of 3)

Field	Value	Description
Bay	DPCC:00	The Bay field identifies the bay (frame type and number) that contains the CP or packlet identified in the log report.
Shelf	2 digits	A number identifying the shelf where the CP, packlet, or device is located. Possible values are 0, 1, 2, and 3.
Slot	3 alphanumeric characters	Two digits identifying the slot number and one character identifying the side (front or rear) of the shelf. Possible values for the slot are in the range 1 to 18. Possible values for the side are F and R.
Packlet	1 character (optional)	If the AMDI links are supported by an AMDI packlet, this is a character identifying the packlet position (upper or lower). Possible values are U and L. If the AMDI links are supported by an HIOP circuit pack, the field is blank.
Device	1 digit (optional)	One digit identifying the number of the device (0 or 1) involved in the state change. This field is displayed only if the Class of the resource involved in the state change is PORT, LINK, or TOD.
EqPEC	9 alphanumeric characters	The EqPEC field identifies the product engineering code (EqPEC) of the CP or packlet identified in the log report. If the device involved in the state change is not a CP or packlet, then the EqPEC displayed is that of the CP or packlet that is hosting the device.
Serial	14 alphanumeric characters	The Serial field identifies the serial number of the CP or packlet identified in the log report. If the device involved in the state change is not a CP or packlet, then the serial number displayed is that of the CP or packlet that is hosting the device.

Action

There are no actions for this log.

XAC609 AMDI Link Condition Cleared (end)

Associated OM registers

There are no OM registers associated with this log.

XAC610 Card Returned to Service

Explanation

The Card Returned to Service log reports a return-to-service (RTS) state change of a circuit pack (CP) or packlet when both of the following conditions occur:

- A circuit pack (CP) or packlet returns to service.
- The RTS state change of this CP or packlet is not connected to an alarm clearing condition.

A Card Returned to Service log indicates a **Minor alarm** condition. A Minor alarm condition means that a CP or packlet has returned to service.

Note: The Card Returned to Service log does not generate for all RTS state changes of a CP or packlet. If a CP or packlet returns to service because a related alarm condition clears, the log connected with this alarm clearing condition reports the RTS state change. For example, if a Shared Memory CP returns to service because a LowSM alarm condition clears, the LowSM Condition Cleared log report generates and reports that the SM CP is now in-service. In this example, the Card Returned to Service log report does not report the RTS state change.

Event Type

Return to Service (RTS)

Format

The format for log XAC610 follows:

```
XACnnn      mmmdd hh:mm:ss  ssdd  Event Type  Log Title
  DESCRIPTION: State has changed from OldState to NewState by Init. action
  Class:     Type State Site  FL  Row Bay    Shf/Slt/Pk   EqPEC/Serial
             cccc cccc  cccc  nn cnn cccc:nn nn nns  p ccccnncc/nnnnnnnn
  IMPACT: <System Impact Statement>
  ACTION: <Action Statement>
```

XAC610 Card Returned to Service (continued)

Example

An example of log XAC610 follows:

```
XAC610      FEB27 11:02:45  6300  RTS Returned to Service
  DESCRIPTION: State has changed from SYSB to INSV by SYSTEM action
  CARD:       Type State Site  FL  Row  Bay     Shf/Slt/Pk    EqPEC/Serial
              PE   Insv  HOST  01  A00  DPCC:00 00 05F     NTLX02CA/nnnnnnnn
  IMPACT: PE upgrade activity in progress. Config alarm is raised.
  ACTION: Upgrade remaining processor cards.
```

Field descriptions

The following table explains each of the fields in log XAC610:

Field descriptions for the Card Returned to Service log (Sheet 1 of 3)

Field	Value	Description
Reportid	XAC610	The Reportid field displays the log group (XAC) and identification number of the log report.
Event Type	RTS	The Event Type field displays the type of event identified in the log report.
Log title	Text string	A text string describing the title of the log report.
DESCRIPTION	Text string	A text string describing the state change. The DESCRIPTION field contains the following fields: Old State, New State, and Initiator.
OldState	4 characters	A character field identifying the “from” state. Possible values are: SYSB, CBSY, MBSY, ISTB, INSV, UNEQ, and SPLT.
NewState	4 characters	A character field identifying the “to” state. Possible values are: SYSB, CBSY, MBSY, ISTB, INSV, UNEQ, and SPLT.
Initiator (Init)	Up to 12 characters	A character field identifying the initiator of the state change. Possible values are: MANUAL, SYSTEM, RECOVERY, PROVISIONING, CLOCKEVENT, FAULT, SWACT, REX, IMGTST, MSMTCE, SREX, AUDIT, IRM, and CCMT.
Class	4 characters	The class of resource that is involved in the state change. Possible values are: CARD, PORT, LINK, and TOD.

XAC610 Card Returned to Service (continued)

Field descriptions for the Card Returned to Service log (Sheet 2 of 3)

Field	Value	Description
Type	4 characters	A character field identifying the type of CP or packlet identified in the log report. This field, in conjunction with the Class field, identifies the resource involved in the state change. For example, Class Link and Type ETHR identifies an Ethernet link.
State	4 characters	The State field displays the current operational state of the CP or packlet identified in the log report.
Site	4 characters	The Site field displays the site location of the switch that contains the CP or packlet identified in the log report.
Floor	2 digits	The Floor field displays the floor position, within the site, of the CP or packlet identified in the log report.
Row	Alphanumeric: 1 digit followed by 2 characters	The Row field identifies the row position, on the floor, that contains the CP or packlet identified in the log report.
Bay	DPCC:00	The Bay field identifies the bay (frame type and number) that contains the CP or packlet identified in the log report.
Shelf	2 digits	A number identifying the shelf where the CP, packlet, or device is located. Possible values are 0, 1, 2, and 3.
Slot	3 alphanumeric characters	Two digits identifying the slot number and one character identifying the side (front or rear) of the shelf. Possible values for the slot are in the range 1 to 18. Possible values for the side are F and R.
Packlet	1 character (optional)	If the component that returned to service is a packlet or a device on a packlet, this is a character identifying the packlet position (upper or lower). Possible values are U and L. Otherwise the field is blank.

XAC610 Card Returned to Service (end)

Field descriptions for the Card Returned to Service log (Sheet 3 of 3)

Field	Value	Description
Device	1 digit (optional)	One digit identifying the number of the device (0 or 1) involved in the state change. This field is displayed only if the Class of the resource involved in the state change is PORT, LINK, or TOD.
EqPEC	9 alphanumeric characters	The EqPEC field identifies the product engineering code (EqPEC) of the CP or packlet identified in the log report. If the device involved in the state change is not a CP or packlet, then the EqPEC displayed is that of the CP or packlet that is hosting the device.
Serial	14 alphanumeric characters	The Serial field identifies the serial number of the CP or packlet identified in the log report. If the device involved in the state change is not a CP or packlet, then the serial number displayed is that of the CP or packlet that is hosting the device.
IMPACT	Text string (optional)	The Impact field describes the impact of the condition to the XA-Core.
ACTION	Text string (optional)	The Action field displays the recommended action that operating company personnel can follow in light of the information in the IMPACT field.

Action

If the IMPACT field indicates that PE upgrade activity is in progress and that the Config alarm is raised, the craftsperson should complete the upgrade process by replacing the remaining earlier-model PE circuit packs with NTLX02DA-model PE circuit packs.

Associated OM registers

There are no OM registers for this log.

XAC612 IOP Alarm Cleared

Explanation

The system generates the input/output processor (IOP) Alarm Cleared log (XAC612) report when an IOP alarm condition clears, and the IOP, HIOP, or HCMIC circuit pack (CP) returns to service (RTS).

Event Type

Information (INFO)

Format

The format for log XAC612 follows:

```
XACnnn      mmmdd hh:mm:ss  ssdd  Event Type  Log Title
  DESCRIPTION: State has changed from OldState to NewState by Init. action
  Class:     Type State Site  FL  Row Bay    Shf/Slt/Pk   EqPEC/Serial
             cccc cccc  cccc  nn cnn cccc:nn nn nns  p ccccnncc/nnnnnnnn
```

Example

An example of log XAC612 follows:

```
XAC612      MAY18 11:15:39  6000  INFO IOP Cleared
  DESCRIPTION: State has changed from SYSB to INSV by SYSTEM action
  CARD:      Type State Site  FL  Row Bay    Shf/Slt/Pk   EqPEC/Serial
             IOP  Insv  HOST  01 A00 DPCC:00 01 17F    NTLX03AA/nnnnnnnn
```

Field descriptions

The following table explains each of the fields in log XAC612:

Field descriptions for the IOP Alarm Cleared log (Sheet 1 of 3)

Field	Value	Description
Reportid	XAC612	The Reportid field displays the log group (XAC) and identification number of the log report.
Event Type	INFO	The Event Type field displays the type of event identified in the log report.
Log title	Text string	A text string describing the title of the log report.

XAC612 IOP Alarm Cleared (continued)

Field descriptions for the IOP Alarm Cleared log (Sheet 2 of 3)

Field	Value	Description
DESCRIPTION	Text string	A text string describing the state change. The DESCRIPTION field contains the following fields: Old State, New State, and Initiator.
OldState	4 characters	A character field identifying the “from” state. Possible values are: SYSB, CBSY, MBSY, ISTB, INSV, UNEQ, and SPLT.
NewState	4 characters	A character field identifying the “to” state. Possible values are: SYSB, CBSY, MBSY, ISTB, INSV, UNEQ, and SPLT.
Initiator (Init)	Up to 12 characters	A character field identifying the initiator of the state change. Possible values are: MANUAL, SYSTEM, RECOVERY, PROVISIONING, CLOCKEVENT, FAULT, SWACT, REX, IMGTST, MSMTCE, SREX, AUDIT, IRM, and CCMT.
Class	4 characters	The class of resource that is involved in the state change. Possible values are: CARD, PORT, LINK, and TOD.
Type	4 characters	A character field identifying the type of CP or packlet identified in the log report. This field, in conjunction with the Class field, identifies the resource involved in the state change. For example, Class Link and Type ETHR identifies an Ethernet link.
State	4 characters	The State field displays the current operational state of the CP or packlet identified in the log report.
Site	4 characters	The Site field displays the site location of the switch that contains the CP or packlet identified in the log report.
Floor	2 digits	The Floor field displays the floor position, within the site, of the CP or packlet identified in the log report.
Row	Alphanumeric: 1 digit followed by 2 characters	The Row field identifies the row position, on the floor, that contains the CP or packlet identified in the log report.

XAC612 IOP Alarm Cleared (end)

Field descriptions for the IOP Alarm Cleared log (Sheet 3 of 3)

Field	Value	Description
Bay	DPCC:00	The Bay field identifies the bay (frame type and number) that contains the CP or packlet identified in the log report.
Shelf	2 digits	A number identifying the shelf where the CP, packlet, or device is located. Possible values are 0, 1, 2, and 3.
Slot	3 alphanumeric characters	Two digits identifying the slot number and one character identifying the side (front or rear) of the shelf. Possible values for the slot are in the range 1 to 18. Possible values for the side are F and R.
Packlet	1 character (optional)	A character identifying the packlet position (upper or lower). Possible values are U and L.
Device	1 digit (optional)	One digit identifying the number of the device (0 or 1) involved in the state change. This field is displayed only if the Class of the resource involved in the state change is PORT, LINK, or TOD.
EqPEC	9 alphanumeric characters	The EqPEC field identifies the product engineering code (EqPEC) of the CP or packlet identified in the log report. If the device involved in the state change is not a CP or packlet, then the EqPEC displayed is that of the CP or packlet that is hosting the device.
Serial	14 alphanumeric characters	The Serial field identifies the serial number of the CP or packlet identified in the log report. If the device involved in the state change is not a CP or packlet, then the serial number displayed is that of the CP or packlet that is hosting the device.

Action

There are no actions for this log.

Associated OM registers

XAIOP

This page is left blank intentionally.

XAC613 RExSch Alarm Cleared

Explanation

The system generates the RExSch Alarm Cleared log (XAC613) report when the RExSch (REx Schedule Failure) alarm condition clears. The RExSch (REx Schedule Failure) alarm condition clears when a system initiated daily REx test (SREx) runs to completion and passes.

Event Type

Summary (SUMM)

Format

The format for log XAC613 follows:

```
XACnnn mmmdd hh:mm:ss  ssdd  Event Type  Event Text
   DESCRIPTION:<Description Statement>
               <Severity of alarm condition cleared statement>
```

Example

An example of log XAC613 follows:

```
XAC613 June 1  16:45:30  4500  SUMM  RExSch Alarm Cleared
   DESCRIPTION:REx Schedule alarm condition cleared.
               Minor alarm condition cleared.
```

Field descriptions

The following table explains each of the fields in log XAC613:

Field descriptions for RExSch Cleared log (Sheet 1 of 2)

Field	Value	Description
Reportid	XAC613	The Reportid field displays the log group and identification number in the log report.
Event Type	SUMM	The Event Type field displays the type of event identified in the log report.
Event Text	Text string	The Event Text field describes the type of event identified in the log report.

XAC613 RExSch Alarm Cleared (end)

Field descriptions for RExSch Cleared log (Sheet 2 of 2)

Field	Value	Description
DESCRIPTION	Text string	The Description field describes the system event and indicates the severity of the alarm condition cleared.

Action

There are no actions for this log.

Associated OM registers

There are no associated OM registers for this log.

XAC614 XATrap Alarm Cleared

Explanation

The system generates the XATrap Alarm Cleared log (XAC614) report when the XATRAP alarm condition clears. The XATRAP alarm condition clears when the trap rate (number of traps per minute) on the XA-Core falls below the XATRAP alarm threshold.

Event type

Information (INFO)

Format

The format for log XAC614 follows:

```
XACnnn   mmmdd  hh:mm:ss   ssdd   Event Type   Title text
   DESCRIPTION:  <Description Statement>
```

Example

An example of log XAC614 follows:

```
XAC614   JAN01  14:56:13   0011   INFO   XATrap Alarm Cleared
   DESCRIPTION:  Trap rate has dropped below XATRAP alarm threshold.
```

Field descriptions

The following table explains each of the fields in log XAC614:

Field descriptions for XATrap log (Sheet 1 of 2)

Field	Value	Description
Reportid	XAC614	The Reportid field displays the log group (XAC) and identification number in the log report.
Event Type	INFO	The Event Type field displays the type of event identified in the log report.

XAC614 XATrap Alarm Cleared (end)

Field descriptions for XATrap log (Sheet 2 of 2)

Field	Value	Description
Event Text	Text string	The Event Text field describes the type of event identified in the log report.
DESCRIPTION	Text string	The Description field describes the system event.

Action

There are no actions for this log.

Associated OM registers

XATRAP

XAC615 REx Started

Explanation

The system performs a system routine exercise (SREx) test, or operating company personnel perform a manual REx test to make sure that XA-Core hardware is functioning correctly.

The system generates the REx Started log (XAC615) report when a routine exercise (REx) test begins on the XA-Core.

Event Type

Information (INFO)

Format

The format for log XAC615 follows:

```
XACnnn mmmdd hh:mm:ss  ssdd  Event Type  Event Text
   DESCRIPTION:<Description Statement>
```

Example

An example of log XAC615 follows:

```
XAC615 NOV02 09:23:56  0011  INFO   REx Started
   DESCRIPTION: XA-Core REx has been initiated.
```

Field descriptions

The following table explains each of the fields in log XAC615:

Field descriptions for REx Started log (Sheet 1 of 2)

Field	Value	Description
Reportid	XAC615	The Reportid field displays the log group and identification number in the log report.
Event Type	INFO	The Event Type field displays the type of event identified in the log report.
Event Text	Text string	The Event Text field describes the type of event identified in the log report.

XAC615 REx Started (end)

Field descriptions for REx Started log (Sheet 2 of 2)

Field	Value	Description
DESCRIPTION	Text string	The Description field describes the system event.

Action

There are no actions for this log.

Associated OM registers

XARSMPXU

XAC618 Split (Split Mode Entered)

Explanation

When the XA-Core enters split mode, the system generates the Split Mode Entered log (XAC 618) report. When the XA-Core system is in split mode, there is an upgrade to the operating system software in progress. Maintenance software has configured processor and shared memory to allow two images to run at the same time. One part of the XA-Core switch continues to process call traffic. The remaining part of the system is ready to receive, or is receiving new operating software.

The Split (Split Mode Entered) log report identifies the shared memory (SM) and processor element (PE) circuit packs (CP) that are not available for call processing while the XA-Core is in split mode.

A Split (Split Mode Entered) log report indicates a **Minor alarm**. A Minor alarm means that the XA-Core system has entered split mode.

When the XA-Core exits split mode, the system generates the Split Mode Exited log (XAC619) report.

Event Type

Information (INFO)

Format

The format for log XAC618 follows:

```
Severity XACnnn mmmdd hh:mm:ssssdd Event Type  Event Text
         DESCRIPTION:<Description Statement>
                                    TYPE        Slot
                                    <cc>        <nnc>
                                    <cc>        <nnc>
         REASON:<Reason Statement>
```

XAC618 Split (Split Mode Entered) (continued)

Example

An example of log XAC618 follows:

```
*     XAC618 DEC11 16:06:39  1600 INFO  Split (Split Mode Entered)
         DESCRIPTION: XA-Core has entered Split Mode. Some SM
                      and PE cards are unavailable for call
                      processing. The following cards are affected:
                                   TYPE        Slot
                                    PE         04F
                                    SM         08F
         REASON:  System Maintenance
```

Field descriptions

The following table explains each of the fields in log XAC618:

Field descriptions for Split (Split Mode Entered) log (Sheet 1 of 2)

Field	Value	Description
Severity	one asterisk (*)	Displays the severity of the associated alarm. One asterisk (*) indicates a minor alarm condition. The XA-Core system has entered split mode.
Reportid	XAC618	The Reportid field displays the log group (XAC) and identification number in the log report.
Event Type	INFO	The Event Type field displays the type of event identified in the log report.
Event Text	Text string	The Event Text field describes the type of event identified in the log report.
DESCRIPTION	Text string	The Description field describes the system event. This field also identifies the type and slot position of the circuit packs (CPs) that are not available for call processing while the XA-Core is in split mode.
Type	SM, PE	The Type field displays the type of circuit pack (CP) that is not available for call processing while the XA-Core is in split mode.

XAC618 Split (Split Mode Entered) (end)

Field descriptions for Split (Split Mode Entered) log (Sheet 2 of 2)

Field	Value	Description
Slot	Character string	The Slot field displays the shelf slot position of CP that is not available for call processing while the XA-Core is in split mode.
REASON	Text string	The Reason field identifies the reason why the PE and SM CPs are not available for call processing.

Action

There are no actions for this log.

Associated OM registers

XAPEMAJU

XASSMPXU

XAMSMPXU

XARSMPXU

This page is left blank intentionally.

XAC619 Split Mode Exited

Explanation

The system generates the Split Mode Exited (XAC619) log report when the XA-Core switch exits split mode. All processor element (PE) and Shared Memory (SM) circuit packs (CP) are now available to run a single software image.

Event Type

Information (INFO)

Format

The format for log XAC619 follows:

```
XACnnn mmmdd hh:mm:ss  ssdd  Event Type  Event Text
   DESCRIPTION:<Description Statement>
```

Example

An example of log XAC619 follows:

```
XAC619 MAY14 13:56:34  0011  INFO   Split Mode Exited
   DESCRIPTION:XA-Core is no longer in Split Mode.
```

XAC619 Split Mode Exited (end)

Field descriptions

The following table explains each of the fields in log XAC619:

Field descriptions for Split Mode Exited log

Field	Value	Description
Reportid	XAC619	The Reportid field displays the log group and identification number in the log report.
Event Type	INFO	The Event Type field displays the type of event identified in the log report.
Event Text	Text string	The Event Text field describes the type of event identified in the log report.
DESCRIPTION	Text string	The Description field describes the system event.

Action

There are no actions for this log.

Associated OM registers

XAPEMAJU

XASSMPXU

XAMSMPXU

XARSMPXU

XAC620 SysBTh Alarm Cleared

Explanation

The system generates the SysBTh Alarm Cleared log report when it clears a SysBTh minor or major alarm.

See the description of log XAC320 in this chapter for a list of the components for which the system maintains counts of system-busy (SysB) transitions, and for a description of the conditions in which the system raises SysBTh minor and SysBTh major alarms.

Event Type

Informational (INFO)

Format

The format for log XAC620 follows:

```
 XACnnn  mmmdd  hh:mm:ss  ssdd  Event Type  Log Title
  Reason: <Reason Statement>
  Grp  Type Component     SysB Cnts in last N hrs       Sum  Thresh
  ---  ---- ---------     42 36 30 24 18 12 06 00       ---  ------
<Group> <Type> <Loc.>     nn nn nn nn nn nn nn nn |<Opt> nn  <nn/nn> <Sev>
```

Example

An example of log XAC620 follows:

```
XAC620  NOV02  20:00:01  0019  INFO  SysBTh Alarm Cleared
 Reason: Minor alarm cleared.
 Grp  Type Component     SysB Cnts in last N hrs       Sum  Thresh
 ---  ---- ---------     42 36 30 24 18 12 06 00     | ---  ------
 IOhw TOD  15 F L TOD     0  0  1  0  0  0  0  0     |   1  2/6
```

Field descriptions

The following table explains each of the fields in log XAC620:

Field descriptions for the SysBth Alarm Cleared log (Sheet 1 of 2)

Field	Value	Description
Reportid	XAC620	The Reportid field displays the log group and identification number of the log report.
Event Type	INFO	The Event Type field displays the type of event identified in the log report.

XAC620 SysBTh Alarm Cleared (end)

Field descriptions for the SysBth Alarm Cleared log (Sheet 2 of 2)

Field	Value	Description
Log title	Text string	A text string describing the title of the log report.
Reason	“Minor alarm cleared.” or “Major alarm cleared.”	Identifies the type of alarm that cleared.
Group	PE SM IOlk IOhw	PE circuit pack or SM circuit pack or IO links or IO hardware. The IO hardware category includes IOP, HIOP, and HCMIC circuit packs, packlets, ports, and TOD devices.
Type	PE, SM, IOP, HIOP, Tape, Disk, RTIF, OC3, CMIC, AMDI, ETHR, TOD	Item type. OC3 is the equivalent of AMDI.
Loc.	<Slot><Side> <Position> <Device type>	Identifies the location of the component, where <Slot> is numeric in the range 1 to 18 and <Side> is F for front or R for rear. A <Position> value appears only if the component is a packlet or a packlet’s port, link, or time-of-day device. A <Device type> value appears only if the transitions were by a port, link, or TOD device.
SysB cnts in last N hrs	Eight numeric values, separated by spaces. Each is an integer in the range 0 to 15.	The number of SysB transitions occurring for the component in the current six-hour interval (the rightmost value), and in each of the seven preceding six-hour intervals. The counter for each interval can count as high as 15.
Opt	A plus sign (+) or a blank space	A plus sign (+) appears if the Group is IOhw, and if the value in the Sum field is a sum of transitions for multiple IOhw components that are associated with the slot.
Sum	Numeric	The sum of the SysB transitions occurring in the current 6-hour interval, and in the seven preceding 6-hour intervals.
Thresh	Two numeric values separated by a slash	The two values separated by a slash indicate the minor and major SysB transition thresholds for the component.
Sev	One asterisk (*), two asterisks (**), or a blank space	One asterisk indicates that a SysBTh minor alarm is raised. Two asterisks indicate that a SysBTh major alarm is raised.

Action

There are no actions for this log.

Associated OM registers

There are no associated OM registers for this log.

XAC622 PETrbl Alarm Cleared

Explanation

The system generates the Processor Element Trouble (PETrbl) Alarm Cleared log (XAC622) report when the PETrbl alarm condition clears. The PETrbl alarm condition clears when a non-critical fault on a processor element (PE) circuit pack (CP) clears. The clearing of the non-critical fault causes the PE CP to change state from IsTb to InSv.

Event Type

Information (INFO)

Format

The format for log XAC622 follows:

```
XACnnn      mmmdd hh:mm:ss  ssdd  Event Type  Log Title
  DESCRIPTION: State has changed from OldState to NewState by Init. action
  Class:     Type State Site  FL  Row Bay    Shf/Slt/Pk   EqPEC/Serial
             cccc cccc  cccc  nn  cnn cccc:nn nn nns  p cccc nncc/nnnnnnnn
```

Example

An example of log XAC622 follows:

```
XAC622      NOV09 09:23:45  0011  INFO PETrbl Alarm Cleared
  DESCRIPTION: State has changed from ISTB to INSV by SYSTEM action
  CARD:      Type State Site  FL  Row Bay    Shf/Slt/Pk   EqPEC/Serial
             PE   Insv  HOST  01  A00 DPCC:00 00 04F  NTLX02AA/nnnnnnnn
```

Field descriptions

The following table explains each of the fields in log XAC622:

Field descriptions for the PETrbl Alarm Cleared log (Sheet 1 of 3)

Field	Value	Description
Reportid	XAC622	The Reportid field displays the log group (XAC) and identification number of the log report.
Event Type	INFO	The Event Type field displays the type of event identified in the log report.
Log title	Text string	A text string describing the title of the log report.

XAC622 PETrbl Alarm Cleared (continued)

Field descriptions for the PETrbl Alarm Cleared log (Sheet 2 of 3)

Field	Value	Description
DESCRIPTION	Text string	A text string describing the state change. The DESCRIPTION field contains the following fields: Old State, New State, and Initiator.
OldState	4 characters	A character field identifying the “from” state. Possible values are: SYSB, CBSY, MBSY, ISTB, INSV, UNEQ, and SPLT.
NewState	4 characters	A character field identifying the “to” state. Possible values are: SYSB, CBSY, MBSY, ISTB, INSV, UNEQ, and SPLT.
Initiator (Init)	Up to 12 characters	A character field identifying the initiator of the state change. Possible values are: MANUAL, SYSTEM, RECOVERY, PROVISIONING, CLOCKEVENT, FAULT, SWACT, REX, IMGTST, MSMTCE, SREX, AUDIT, IRM, and CCMT.
Class	4 characters	The class of resource that is involved in the state change. Possible values are: CARD, PORT, LINK, and TOD.
Type	4 characters	A character field identifying the type of CP or packlet identified in the log report. This field, in conjunction with the Class field, identifies the resource involved in the state change. For example, Class Link and Type ETHR identifies an Ethernet link.
State	4 characters	The State field displays the current operational state of the CP or packlet identified in the log report.
Site	4 characters	The Site field displays the site location of the switch that contains the CP or packlet identified in the log report.
Floor	2 digits	The Floor field displays the floor position, within the site, of the CP or packlet identified in the log report.
Row	Alphanumeric: 1 digit followed by 2 characters	The Row field identifies the row position, on the floor, that contains the CP or packlet identified in the log report.

XAC622 PETrbl Alarm Cleared (end)

Field descriptions for the PETrbl Alarm Cleared log (Sheet 3 of 3)

Field	Value	Description
Bay	DPCC:00	The Bay field identifies the bay (frame type and number) that contains the CP or packlet identified in the log report.
Shelf	2 digits	A number identifying the shelf where the CP, packlet, or device is located. Possible values are 0, 1, 2, and 3.
Slot	3 alphanumeric characters	Two digits identifying the slot number and one character identifying the side (front or rear) of the shelf. Possible values for the slot are in the range 1 to 18. Possible values for the side are F and R.
Packlet	1 character (optional)	A character identifying the packlet position (upper or lower). Possible values are U and L.
Device	1 digit (optional)	One digit identifying the number of the device (0 or 1) involved in the state change. This field is displayed only if the Class of the resource involved in the state change is PORT, LINK, or TOD.
EqPEC	9 alphanumeric characters	The EqPEC field identifies the product engineering code (EqPEC) of the CP or packlet identified in the log report. If the device involved in the state change is not a CP or packlet, then the EqPEC displayed is that of the CP or packlet that is hosting the device.
Serial	14 alphanumeric characters	The Serial field identifies the serial number of the CP or packlet identified in the log report. If the device involved in the state change is not a CP or packlet, then the serial number displayed is that of the CP or packlet that is hosting the device.

Action

There are no actions for this log.

Associated OM registers

There are no OM registers associated with this log.

This page is left blank intentionally.

XAC623 SMTrbl Alarm Cleared

Explanation

The system generates the Shared Memory Trouble (SMTrbl) Alarm Cleared (XAC623) log report when the SMTrbl alarm condition clears. An SMTrbl alarm clears when a non-critical fault condition on a shared memory (SM) circuit pack (CP) clears. The clearing of the non-critical fault causes the SM CP to change state from IsTb to InSv.

Event Type

Information (INFO)

Format

The format for log XAC623 follows:

```
XACnnn      mmmdd hh:mm:ss  ssdd  Event Type  Log Title
  DESCRIPTION: State has changed from OldState to NewState by Init. action
  Class:     Type State Site  FL  Row Bay    Shf/Slt/Pk   EqPEC/Serial
             cccc cccc  cccc  nn  cnn cccc:nn nn nns  p cccccnncc/nnnnnnnn
```

Example

An example of log XAC623 follows:

```
XAC623      DEC12 11:51:03  7600  INFO SMTrbl Alarm Cleared
  DESCRIPTION: State has changed from ISTB to INSV by SYSTEM action
  CARD:      Type State Site  FL  Row Bay    Shf/Slt/Pk   EqPEC/Serial
             SM   Insv  HOST  00  A00 DPCC:00 00 11F   NTLX14CA/nnnnnnnn
```

Field descriptions

The following table explains each of the fields in log XAC623:

Field descriptions for the SMTrbl Alarm Cleared log (Sheet 1 of 3)

Field	Value	Description
Reportid	XAC623	The Reportid field displays the log group (XAC) and identification number of the log report.
Event Type	INFO	The Event Type field displays the type of event identified in the log report.
Log title	Text string	A text string describing the title of the log report.

XAC623 SMTrbl Alarm Cleared (continued)

Field descriptions for the SMTrbl Alarm Cleared log (Sheet 2 of 3)

Field	Value	Description
DESCRIPTION	Text string	A text string describing the state change. The DESCRIPTION field contains the following fields: Old State, New State, and Initiator.
OldState	4 characters	A character field identifying the “from” state. Possible values are: SYSB, CBSY, MBSY, ISTB, INSV, UNEQ, and SPLT.
NewState	4 characters	A character field identifying the “to” state. Possible values are: SYSB, CBSY, MBSY, ISTB, INSV, UNEQ, and SPLT.
Initiator (Init)	Up to 12 characters	A character field identifying the initiator of the state change. Possible values are: MANUAL, SYSTEM, RECOVERY, PROVISIONING, CLOCKEVENT, FAULT, SWACT, REX, IMGTST, MSMTCE, SREX, AUDIT, IRM, and CCMT.
Class	4 characters	The class of resource that is involved in the state change. Possible values are: CARD, PORT, LINK, and TOD.
Type	4 characters	A character field identifying the type of CP or packlet identified in the log report. This field, in conjunction with the Class field, identifies the resource involved in the state change. For example, Class Link and Type ETHR identifies an Ethernet link.
State	4 characters	The State field displays the current operational state of the CP or packlet identified in the log report.
Site	4 characters	The Site field displays the site location of the switch that contains the CP or packlet identified in the log report.
Floor	2 digits	The Floor field displays the floor position, within the site, of the CP or packlet identified in the log report.
Row	Alphanumeric: 1 digit followed by 2 characters	The Row field identifies the row position, on the floor, that contains the CP or packlet identified in the log report.

XAC623 SMTrbl Alarm Cleared (end)

Field descriptions for the SMTrbl Alarm Cleared log (Sheet 3 of 3)

Field	Value	Description
Bay	DPCC:00	The Bay field identifies the bay (frame type and number) that contains the CP or packlet identified in the log report.
Shelf	2 digits	A number identifying the shelf where the CP, packlet, or device is located. Possible values are 0, 1, 2, and 3.
Slot	3 alphanumeric characters	Two digits identifying the slot number and one character identifying the side (front or rear) of the shelf. Possible values for the slot are in the range 1 to 18. Possible values for the side are F and R.
Packlet	1 character (optional)	A character identifying the packlet position (upper or lower). Possible values are U and L.
Device	1 digit (optional)	One digit identifying the number of the device (0 or 1) involved in the state change. This field is displayed only if the Class of the resource involved in the state change is PORT, LINK, or TOD.
EqPEC	9 alphanumeric characters	The EqPEC field identifies the product engineering code (EqPEC) of the CP or packlet identified in the log report. If the device involved in the state change is not a CP or packlet, then the EqPEC displayed is that of the CP or packlet that is hosting the device.
Serial	14 alphanumeric characters	The Serial field identifies the serial number of the CP or packlet identified in the log report. If the device involved in the state change is not a CP or packlet, then the serial number displayed is that of the CP or packlet that is hosting the device.

Action

There are no actions for this log.

Associated OM registers

There are no OM registers associated with this log.

This page is left blank intentionally.

XAC624 IOTrbl Alarm Cleared

Explanation

The system generates the input/output Trouble (IOTrbl) Alarm Cleared (XAC624) log report when an IOTrbl alarm condition clears. An IOTrbl alarm clears when a non-critical fault condition clears on any of the following elements and that element changes state from IsTb to InSv:

- high performance input/output processor (HIOP) circuit pack (CP)
- high performance CMIC (HCMIC) circuit pack (CP)
- input/output processor (IOP) circuit pack (CP)
- IOP packlet (RTIF, CMIC, Disk or Tape packlet)
- a link, port, or TOD clock

Event Type

Information (INFO)

Format

The format for log XAC624 follows:

```
XACnnn      mmmdd hh:mm:ss  ssdd  Event Type  Log Title
  DESCRIPTION: State has changed from OldState to NewState by Init. action
  Class:     Type State Site  FL  Row Bay    Shf/Slt/Pk   EqPEC/Serial
             cccc cccc  cccc  nn cnn cccc:nn nn nns  p ccccnncc/nnnnnnnn
```

Example

An example of log XAC624 follows:

```
XAC624      JAN09 09:42:23  9000  INFO IOTrbl Alarm Cleared
  DESCRIPTION: State has changed from ISTB to INSV by SYSTEM action
  CARD:      Type State Site  FL  Row Bay    Shf/Slt/Pk   EqPEC/Serial
             IOP  Insv  HOST  00 A00 DPCC:00 01 17F   NTLX03AA/nnnnnnnn
```

XAC624 IOTrbl Alarm Cleared (continued)

Field descriptions

The following table explains each of the fields in log XAC624:

Field descriptions for the IOTrbl Alarm Cleared log (Sheet 1 of 3)

Field	Value	Description
Reportid	XAC624	The Reportid field displays the log group (XAC) and identification number of the log report.
Event Type	INFO	The Event Type field displays the type of event identified in the log report.
Log title	Text string	A text string describing the title of the log report.
DESCRIPTION	Text string	A text string describing the state change. The DESCRIPTION field contains the following fields: Old State, New State, and Initiator.
OldState	4 characters	A character field identifying the “from” state. Possible values are: SYSB, CBSY, MBSY, ISTB, INSV, UNEQ, and SPLT.
NewState	4 characters	A character field identifying the “to” state. Possible values are: SYSB, CBSY, MBSY, ISTB, INSV, UNEQ, and SPLT.
Initiator (Init)	Up to 12 characters	A character field identifying the initiator of the state change. Possible values are: MANUAL, SYSTEM, RECOVERY, PROVISIONING, CLOCKEVENT, FAULT, SWACT, REX, IMGTST, MSMTCE, SREX, AUDIT, IRM, and CCMT.
Class	4 characters	The class of resource that is involved in the state change. Possible values are: CARD, PORT, LINK, and TOD.
Type	4 characters	A character field identifying the type of CP or packlet identified in the log report. This field, in conjunction with the Class field, identifies the resource involved in the state change. For example, Class Link and Type ETHR identifies an Ethernet link.
State	4 characters	The State field displays the current operational state of the CP or packlet identified in the log report.

XAC624 IOTrbl Alarm Cleared (continued)

Field descriptions for the IOTrbl Alarm Cleared log (Sheet 2 of 3)

Field	Value	Description
Site	4 characters	The Site field displays the site location of the switch that contains the CP or packlet identified in the log report.
Floor	2 digits	The Floor field displays the floor position, within the site, of the CP or packlet identified in the log report.
Row	Alphanumeric: 1 digit followed by 2 characters	The Row field identifies the row position, on the floor, that contains the CP or packlet identified in the log report.
Bay	DPCC:00	The Bay field identifies the bay (frame type and number) that contains the CP or packlet identified in the log report.
Shelf	2 digits	A number identifying the shelf where the CP, packlet, or device is located. Possible values are 0, 1, 2, and 3.
Slot	3 alphanumeric characters	Two digits identifying the slot number and one character identifying the side (front or rear) of the shelf. Possible values for the slot are in the range 1 to 18. Possible values for the side are F and R.
Packlet	1 character (optional)	If the component on which the trouble condition cleared was a packlet or a device on a packlet, this is a character identifying the packlet position (upper or lower). Possible values are U and L. Otherwise the field is blank.
Device	1 digit (optional)	One digit identifying the number of the device (0 or 1) involved in the state change. This field is displayed only if the Class of the resource involved in the state change is PORT, LINK, or TOD.
EqPEC	9 alphanumeric characters	The EqPEC field identifies the product engineering code (EqPEC) of the CP or packlet identified in the log report. If the device involved in the state change is not a CP or packlet, then the EqPEC displayed is that of the CP or packlet that is hosting the device.

XAC624 IOTrbl Alarm Cleared (end)

Field descriptions for the IOTrbl Alarm Cleared log (Sheet 3 of 3)

Field	Value	Description
Serial	14 alphanumeric characters	The Serial field identifies the serial number of the CP or packlet identified in the log report. If the device involved in the state change is not a CP or packlet, then the serial number displayed is that of the CP or packlet that is hosting the device.

Action

There are no actions for this log.

Associated OM registers

There are no associated OM registers for this log.

XAC625 RIBKEY Removed

Explanation

A retrofit inactive boot key (RIBkey) is a tool that Installation personnel use during an upgrade or cutover process of the XA-Core. A RIBkey connects to the local port on each of the XA-Core reset terminal interfaces (RTIF). Installation personnel remove the RIBKeys when the switch of activity (SWact) is complete and the XA-Core is the active core.

The system generates the RIBKEY Removed log (XAC625) report to indicate to operating company personnel when a RIBKEY device is removed from a local RTIF port on an RTIF packlet or on an HCMIC circuit pack.

Event Type

Information (INFO)

Format

The format for log XAC625 follows:

```
XACnnn mmmdd hh:mm:ss  ssdd  Event Type  Event Text
   DESCRIPTION:<Description Statement>
               <Severity of alarm condition cleared statement>
   CARD: Type State Site FL Row Bay    Shf/Slot     EqPEC/Serial
         cccc cccc  cccc  nn cnn cccc:nn  nn/nns p ccccnncc/nnnnnnnn
```

Example

An example of log XAC625 follows:

```
XAC625 NOV06 12:09:18  0011  INFO   RIBKEY Removed
   DESCRIPTION:A RIBKEY has been removed from the XA-Core.
               Minor alarm condition cleared.
   CARD: Type State Site FL Row Bay    Shf/Slot     EqPEC/Serial
         RTIF InSv  HOST  00 A00 DPCC:00 01/15F  U NTLX08AA/nnnnnnnn
```

XAC625 RIBKEY Removed (continued)

Field descriptions

The following table explains each of the fields in log XAC625:

Field descriptions for RIBKEY Removed log (Sheet 1 of 2)

Field	Value	Description
Reportid	XAC625	The Reportid field displays the log group and identification number of the log report.
Event Type	INFO	The Event Type field displays the type of event identified in the log report.
Event Text	Text string	The Event Text field describes the type of event identified in the log report.
DESCRIPTION	Text string	The Description field describes the system event and indicates the alarm severity of the condition cleared.
CARD Type	Character string	The Card Type field displays the type of circuit pack (CP) or packlet identified in the log report.
State	Character string	The State field displays the current operational state of the CP or packlet identified in the log report.
Site	Character string	The Site field displays the site location of the switch that contains the CP or packlet identified in the log report.
FL	Numeric	The Floor field displays the floor position, within the site, of the CP or packlet identified in the log report.
Row	Alphanumeric	The Row field displays the row position, on the floor, that contains the CP or packlet identified in the log report.
Bay	Alphanumeric	The Bay field identifies the bay (frame type and number) that contains the CP or packlet identified in the log report.

XAC625 RIBKEY Removed (end)

Field descriptions for RIBKEY Removed log (Sheet 2 of 2)

Field	Value	Description
Shf/Slot	Alphanumeric nn/nns p where: nn/=0 to 3 /nn=01 to 18 s=F or R p=U or L	The Shelf (Shf) and Slot field identify the shelf position within the bay, and slot position within the shelf, that contains the CP or packlet identified in the log report. where: nn/= the shelf position number. /nn= the slot position number. s= side position, either the front (F) side or rear (R) side of the XA-Core shelf that contains the CP. p= the packlet position, either the upper (U) or lower (L) position, within an IOP CP. The packlet position only displays when the indicated slot and side are from an IOP.
EqPEC/Serial	Alphanumeric	The EqPEC/Serial field identifies the equipment product engineering code (EqPEC) and the serial number of the CP or packlet identified in the log report.

Action

There are no actions for this log.

Associated OM registers

There are no OM registers for this log.

This page is left blank intentionally.

XAC626 MS Link Configuration Restored

Explanation

A message switch (MS) Link mismatch occurs when a CMIC link from a port on the CMIC hardware in the XA-Core shelf (an HCMIC circuit pack or an XA-Core OC-3 two-port Interface packlet) is connected to the wrong port on the MS OC-3 2-port Interface Paddleboard.

The switch generates the MS Link Mismatch Configuration Restored (XAC626) log report when the XA-Core CMIC port to MS port link connections are restored to the correct configuration.

Event Type

Information (INFO)

Format

The format for log XAC626 follows:

```
XACnnn   mmmdd  hh:mm:ss   ssdd   Event Type   Event Text
   DESCRIPTION:<Description Statement>
   CARD: Type  State  Site  FL  Row  Bay    Shf/Slot      EqPEC/Serial
         cccc  cccc   cccc  nn  cnn  cccc:nn  nn/nns p  ccccnncc/nnnnnnnnn
   PORT:  n
             SHELF  MS   CARD   PORT
   EXPECTED:  nn    nn    nn     nn
   ACTUAL:    nn    nn    nn     nn
```

Example

An example of log XAC626 follows:

XAC626 MS Link Configuration Restored (continued)

```
XAC626  NOV03  18:34:45  8800  INFO  MS Link Configuration Restored
  DESCRIPTION:MS Link Configuration has been restored.
  CARD: Type  State  Site  FL  Row  Bay    Shf/Slot      EqPEC/Serial
        CMIC  InSv   HOST  00  A00  DPCC:00  01/15R L  NTLX05AA/nnnnnnnnn
  PORT:  0
            SHELF  MS  CARD  PORT
   EXPECTED:  0     1    24    0
   ACTUAL:    0     1    24    0
```

Field descriptions

The following table explains each of the fields in log XAC626:

Field descriptions for MS Link Configuration Restored log (Sheet 1 of 3)

Field	Value	Description
Reportid	XAC626	The Reportid field displays the log group and identification number of the log report.
Event Type	INFO	The Event Type field displays the type of event identified in the log report.
Event Text	Text string	The Event Text field describes the type of event identified in the log report.
DESCRIPTION	Text string	The Description field describes the system event.
CARD Type	Character string	The Card Type field displays the type of circuit pack (CP) or packlet identified in the log report.
State	Character string	The State field displays the current operational state of the CP or packlet identified in the log report.
Site	HOST	The Site field displays the site location of the switch that contains the CP or packlet identified in the log report.
FL	Numeric	The Floor field displays the floor position, within the site, of the CP or packlet identified in the log report.

XAC626 MS Link Configuration Restored (continued)

Field descriptions for MS Link Configuration Restored log (Sheet 2 of 3)

Field	Value	Description
Row	Alphanumeric	The Row field identifies the row position, on the floor, that contains the CP or packlet identified in the log report.
Bay	DPCC:00	The Bay field identifies the bay (frame type and number) that contains the CP or packlet identified in the log report.
Shf/Slot	nn/nns p where: nn/= 0 to 3 /nn=01 to 18 s=F or R p=U or L	The Shelf (Shf) and Slot field identify the shelf position within the bay, and slot position within the shelf, that contains the CP or packlet identified in the log report. where: nn/= the shelf position number. /nn= the slot position number. s= side position, either the front (F) side or rear (R) side of the XA-Core shelf that contains the CP. p= the packlet position, either the upper (U) or lower (L) position, within an IOP CP. The packlet position only displays when the indicated slot and side are from an IOP CP.
EqPEC/Serial	Alphanumeric	The EqPEC/Serial field identifies the equipment product engineering code (EqPEC) and the serial number of the CP or packlet identified in the log report.
PORT	0 to 1	The Port field indicates the port number on a CMIC packlet.
REASON	Text string	The Reason field describes the cause of the condition reported in the log report.
EXPECTED	Character string	The Expected field indicates the expected MS Link configuration. This field identifies the expected MS shelf number, MS, MS Card number and MS port number.

XAC626 MS Link Configuration Restored (end)

Field descriptions for MS Link Configuration Restored log (Sheet 3 of 3)

Field	Value	Description
ACTUAL	Character string	The Actual field indicates the actual MS Link configuration. This field identifies the actual MS shelf number, MS, MS Card number and MS port number.

Action

There are no actions for this log.

Associated OM registers

There are no OM registers associated with this log.

XAC627 WgSlot Cleared (Card Removed)

Explanation

The system generates the WgSlot Cleared (Card Removed) log (XAC627) report when a WgSlot alarm condition clears. A WgSlot alarm condition clears when operating company personnel remove a circuit pack (CP) from the wrong XA-Core shelf slot.

Event Type

Information (INFO)

Format

The format for log XAC627 follows:

```
XACnnn   mmmdd   hh:mm:ss   ssdd   Event Type   Title text
   DESCRIPTION:<Description Statement>
      Shf    Slot  Side   TypePEC
   nn    nn    c    cc   ccccnncc
```

Example

An example of log XAC627 follows:

```
XAC627   NOV02   13:45:56   1700  INFO   WgSlot Cleared - Card Removed
   DESCRIPTION:Card in wrong slot removed.
      Shf    Slot  Side   TypePEC
   00    06    F    PE   NTLX02AA
```

Field descriptions

The following table explains each of the fields in log XAC627

Field descriptions for WgSlot Cleared (Card Removed) log (Sheet 1 of 2)

Field	Value	Description
Reportid	XAC627	The Reportid field displays the log group and identification number of the log report.

XAC627 WgSlot Cleared (Card Removed) (end)

Field descriptions for WgSlot Cleared (Card Removed) log (Sheet 2 of 2)

Field	Value	Description
Event Type	INFO	The Event Type field displays the type of event identified in the log report.
Event Text	Text string	The Event Text field describes the type of event identified in the log report.
DESCRIPTION	Text string	The Description field describes the system event.
Shf	Numeric	The Shf field indicates the shelf position of the circuit pack (CP) that was removed from the wrong shelf slot.
Slot	Numeric	The Slot field describes the shelf slot position of the CP that was removed from the wrong shelf slot.
Side	F or R	The Side field indicates the shelf side location of the CP that was removed from the wrong shelf slot. The side location can be the front (F) side or rear (R) side of the shelf.
Type	Character string	The Type field indicates the type of CP that was removed from the wrong shelf slot.
PEC	Alphanumeric	The PEC field indicates the PEC number of the CP that was removed from the wrong shelf slot.

Action

There are no actions for this log.

Associated OM registers

There are no associated OM registers for this log.

XAC628 Provisioning/Deprovisioning

Explanation

The system generates the XA-Core Provisioning/Deprovisioning log (XAC628) when a component on the XA-Core is provisioned or deprovisioned.

Event Type

Information (INFO)

Format

The format for log report XAC628 follows.

```
XACnnn     mmmdd hh:mm:ss  ssdd  Event Type  Log Title
  DESCRIPTION: State has changed from OldState to NewState by Init. action
  Class:     Type State Site  FL  Row Bay    Shf/Slt/Pk   EqPEC/Serial
             cccc cccc  cccc  nn  cnn cccc:nn nn nns  p ccccnncc/nnnnnnnn
```

Example

An example of log report XAC628 follows.

```
XAC628     FEB14 17:50:32  3000  INFO XA-Core Provisioning Report
  DESCRIPTION: State has changed from UNEQ to SYSB by SYSTEM action
  CARD:      Type State Site  FL  Row Bay    Shf/Slt/Pk   EqPEC/Serial
             SM   SysB  HOST  01  A00 DPCC:00 00 09F   NTLX14CA/nnnnnnnn
```

Field descriptions

The following table explains each of the fields in the log report:

Field descriptions for the XA-Core Provisioning/Deprovisioning log (Sheet 1 of 3)

Field	Value	Description
Reportid	XAC628	The Reportid field displays the log group (XAC) and identification number of the log report.
Event Type	INFO or UPGRADE	The Event Type field displays the type of event identified in the log report. UPGRADE indicates that a PE circuit pack was provisioned or deprovisioned during the process of upgrading from earlier-model PE circuit packs to NTLX02DA models.

XAC628 Provisioning/Deprovisioning (continued)

Field descriptions for the XA-Core Provisioning/Deprovisioning log (Sheet 2 of 3)

Field	Value	Description
Log title	Text string	A text string describing the title of the log report.
DESCRIPTION	Text string	A text string describing the state change. The DESCRIPTION field contains the following fields: Old State, New State, and Initiator.
OldState	4 characters	A character field identifying the “from” state. Possible values are: SYSB, CBSY, MBSY, ISTB, INSV, UNEQ, and SPLT.
NewState	4 characters	A character field identifying the “to” state. Possible values are: SYSB, CBSY, MBSY, ISTB, INSV, UNEQ, and SPLT.
Initiator (Init)	Up to 12 characters	A character field identifying the initiator of the state change. Possible values are: MANUAL, SYSTEM, RECOVERY, PROVISIONING, CLOCKEVENT, FAULT, SWACT, REX, IMGTST, MSMTCE, SREX, AUDIT, IRM, and CCMT.
Class	4 characters	The class of resource that is involved in the state change. Possible values are: CARD, PORT, LINK, and TOD.
Type	4 characters	A character field identifying the type of CP or packlet identified in the log report. This field, in conjunction with the Class field, identifies the resource involved in the state change. For example, Class Link and Type ETHR identifies an Ethernet link.
State	4 characters	The State field displays the current operational state of the CP or packlet identified in the log report.
Site	4 characters	The Site field displays the site location of the switch that contains the CP or packlet identified in the log report.
Floor	2 digits	The Floor field displays the floor position, within the site, of the CP or packlet identified in the log report.
Row	Alphanumeric: 1 digit followed by 2 characters	The Row field identifies the row position, on the floor, that contains the CP or packlet identified in the log report.

XAC628 Provisioning/Deprovisioning (end)

Field descriptions for the XA-Core Provisioning/Deprovisioning log (Sheet 3 of 3)

Field	Value	Description
Bay	DPCC:00	The Bay field identifies the bay (frame type and number) that contains the CP or packlet identified in the log report.
Shelf	2 digits	A number identifying the shelf where the CP, packlet, or device is located. Possible values are 0, 1, 2, and 3.
Slot	3 alphanumeric characters	Two digits identifying the slot number and one character identifying the side (front or rear) of the shelf. Possible values for the slot are in the range 1 to 18. Possible values for the side are F and R.
Packlet	1 character (optional)	A character identifying the packlet position (upper or lower). Possible values are U and L.
Device	1 digit (optional)	One digit identifying the number of the device (0 or 1) involved in the state change. This field is displayed only if the Class of the resource involved in the state change is PORT, LINK, or TOD.
EqPEC	9 alphanumeric characters	The EqPEC field identifies the product engineering code (EqPEC) of the CP or packlet identified in the log report. If the device involved in the state change is not a CP or packlet, then the EqPEC displayed is that of the CP or packlet that is hosting the device.
Serial	14 alphanumeric characters	The Serial field identifies the serial number of the CP or packlet identified in the log report. If the device involved in the state change is not a CP or packlet, then the serial number displayed is that of the CP or packlet that is hosting the device.

Action

No immediate action.

Related OM registers

None.

This page is left blank intentionally.

XAC629 Ethernet cleared

Explanation

The system generates the Ethernet Link Condition Cleared log (XAC629) report when the ETHR alarm condition clears.

Event Type

Information (INFO)

Format

The format for log XAC629 follows:

```
XACnnn      mmmdd hh:mm:ss  ssdd  Event Type  Log Title
  DESCRIPTION: State has changed from OldState to NewState by Init. action
  Class:     Type State Site  FL  Row Bay    Shf/Slt/Pk   EqPEC/Serial
             cccc cccc  cccc  nn cnn cccc:nn nn nns  p ccccnncc/nnnnnnnn
```

Example

An example of log XAC629 follows:

```
XAC629      OCT09 19:09:19  1900  INFO ETHR (Ethernet Link Condition Cleared)
  DESCRIPTION: State has changed from SYSB to INSV by SYSTEM action
  LINK:      Type State Site  FL  Row Bay    Shf/Slt/Pk   EqPEC/Serial
             ETHR Insv  HOST  00 A00 DPCC:00 00 05R L 0 NTLX09AA/nnnnnnnn
```

Field descriptions

The following table explains each of the fields in log XAC629

Field descriptions for the Ethernet Link Condition Cleared log (Sheet 1 of 3)

Field	Value	Description
Reportid	XAC629	The Reportid field displays the log group (XAC) and identification number of the log report.
Event Type	INFO	The Event Type field displays the type of event identified in the log report.
Log title	Text string	A text string describing the title of the log report.

XAC629 Ethernet cleared (continued)

Field descriptions for the Ethernet Link Condition Cleared log (Sheet 2 of 3)

Field	Value	Description
DESCRIPTION	Text string	A text string describing the state change. The DESCRIPTION field contains the following fields: Old State, New State, and Initiator.
OldState	4 characters	A character field identifying the “from” state. Possible values are: SYSB, CBSY, MBSY, ISTB, INSV, UNEQ, and SPLT.
NewState	4 characters	A character field identifying the “to” state. Possible values are: SYSB, CBSY, MBSY, ISTB, INSV, UNEQ, and SPLT.
Initiator (Init)	Up to 12 characters	A character field identifying the initiator of the state change. Possible values are: MANUAL, SYSTEM, RECOVERY, PROVISIONING, CLOCKEVENT, FAULT, SWACT, REX, IMGTST, MSMTCE, SREX, AUDIT, IRM, and CCMT.
Class	4 characters	The class of resource that is involved in the state change. Possible values are: CARD, PORT, LINK, and TOD.
Type	4 characters	A character field identifying the type of CP or packlet identified in the log report. This field, in conjunction with the Class field, identifies the resource involved in the state change. For example, Class Link and Type ETHR identifies an Ethernet link.
State	4 characters	The State field displays the current operational state of the CP or packlet identified in the log report.
Site	4 characters	The Site field displays the site location of the switch that contains the CP or packlet identified in the log report.
Floor	2 digits	The Floor field displays the floor position, within the site, of the CP or packlet identified in the log report.
Row	Alphanumeric: 1 digit followed by 2 characters	The Row field identifies the row position, on the floor, that contains the CP or packlet identified in the log report.

XAC629 Ethernet cleared (continued)

Field descriptions for the Ethernet Link Condition Cleared log (Sheet 3 of 3)

Field	Value	Description
Bay	DPCC:00	The Bay field identifies the bay (frame type and number) that contains the CP or packlet identified in the log report.
Shelf	2 digits	A number identifying the shelf where the CP, packlet, or device is located. Possible values are 0, 1, 2, and 3.
Slot	3 alphanumeric characters	Two digits identifying the slot number and one character identifying the side (front or rear) of the shelf. Possible values for the slot are in the range 1 to 18. Possible values for the side are F and R.
Packlet	1 character (optional)	If the ethernet links are supported by ethernet packlets, this is a character identifying the packlet position (upper or lower). Possible values are U and L. If the links are supported by HIOP or HCMIC circuit packs, the field is blank.
Device	1 digit (optional)	One digit identifying the number of the device (0 or 1) involved in the state change. This field is displayed only if the Class of the resource involved in the state change is PORT, LINK, or TOD.
EqPEC	9 alphanumeric characters	The EqPEC field identifies the product engineering code (EqPEC) of the CP or packlet identified in the log report. If the device involved in the state change is not a CP or packlet, then the EqPEC displayed is that of the CP or packlet that is hosting the device.
Serial	14 alphanumeric characters	The Serial field identifies the serial number of the CP or packlet identified in the log report. If the device involved in the state change is not a CP or packlet, then the serial number displayed is that of the CP or packlet that is hosting the device.

Action

There are no associated actions for this log.

XAC629 Ethernet cleared (end)

Associated OM registers

There are no associated OM registers.

XAC630 Firmware Mismatch Cleared

Explanation

The system generates this log when the firmware (FW) mismatch clears. The mismatch occurs when FW version on the field replaceable unit (FRU) and the FW version in the XAFWLOAD data schema table does not match.

Event Type

Information (INFO)

Format

The format for log report XAC630 follows.

```
XACnnn mmmdd hh:mm:ss ssdd   Event Type   Log Title
    DESCRIPTION: <Description statement>
    CARD: Type State Site FL Row Bay     Shf/Slot EqPEC/Serial
        <FRU> <state> <location> <shelf>/<slot><side> <PEC>/<#>
```

Example

An example of log report XAC630 follows.

```
XAC630 OCT27 18:29:47 8300 INFO No FW version mismatch
    DESCRIPTION: FW version is XAIO1AG.
    CARD: Type State Site   FL  Row Bay   Shf/Slot EqPEC/Serial
        IOP  InSv  HOST 01 A00 DPCC:00  00/17F NTLX03BA/Not avail
```

Field descriptions

The following table explains each of the fields in the log report:

Field	Value	Description
Reportid	XAC630	The Reportid field displays the log group (XAC) and identification number of the log report.
Event Type	INFO	The Event Type field displays the type of event identified in the log report.
Log title	Text string	A text string describing the title of the log report.
DESCRIPTION	Text string	Provides details.

XAC630 Firmware Mismatch Cleared (end)

Field	Value	Description
<FRU>	character string	Indicates the FRU type is PE, HIOP, IOP, CMIC, ETHR, or AMDI.
<state>	character string	Indicates the FRU state is InSv, SysB, ManB, CBsy or ISTb.
<location>	character string	Indicates the location of XA-Core.
<shelf>	integer	Indicates the shelf number is 0, 1, 2 or 3.
<slot>	integer	Indicates the slot number is 2 to 17.
<side>	character string	Indicates the slot side is front or rear.
<PEC>	alphanumeric	FRU product engineering code NTLXxxxx in format.
<#>	numeric	Indicates the FRU serial number.
<FW version>	character string	Indicates newly loaded FW version comprised of 8 characters.

Action

None.

Related OM registers

None.

XAC631 Firmware Soaking Started

Explanation

The system generates the log XAC631 when the firmware (FW) soaking process begins.

A Firmware Soaking Started log report indicates an FWsoak Minor alarm. This alarm indicates that firmware soaking is in progress.

Event Type

Information (INFO)

Format

The format for log report XAC631 follows.

```
XAC631 mmmdd hh:mm:ss ssdd INFO FW soaking started
    DESCRIPTION: Soaking of FW started.
    CARD: Type State Site FL Row Bay     Shf/Slot      EqPEC/Serial
        <FRU> <state> <location> <shelf>/<slot><side> <PEC>/<#>
```

Example

An example of log report XAC631 follows.

```
XAC631 OCT27 17:54:09 6100 INFO FW soaking started
    DESCRIPTION: Soaking of FW started.
    CARD: Type State Site FL Row Bay     Shf/Slot      EqPEC/Serial
        PE  InSv  HOST 01 A00 DPCC:00  00/04F    NTLX02AA/Not avai
```

Field descriptions

The following table explains each of the fields in the log report:

Field	Value	Description
<FRU>	character string	Indicates the FRU type is PE, HIOP, IOP CMIC, ETHR, or AMDI.
<state>	character string	Indicates the FRU state is InSv, SysB, ManB, CBsy or ISTb.
<location>	character string	Indicates the location of XA-Core.
<shelf>	integer	Indicates the shelf number is 0, 1, 2 or 3..

XAC631 Firmware Soaking Started (end)

Field	Value	Description
<slot>	integer	Indicates the slot number is 2 to 17.
<side>	character string	Indicates the slot side is front or rear.
<PEC>	alphanumeric	FRU product engineering code NTLXxxxx in format.
<#>	numeric	Indicates the FRU serial number.

Action

None.

Related OM registers

None.

Additional information

Soaking starts when the FRU is returned to service for the first time after loading firmware.

XAC632 Firmware Soaking Completed

Explanation

The system generates the log XAC632 when the firmware (FW) soaking process completes.

Event Type

Information (INFO)

Format

The format for log report XAC632 follows.

```
XAC632 mmmdd hh:mm:ss ssdd INFO FW soaking completed
    DESCRIPTION: Soaking of FW is complete (<#h> hours).
    CARD: Type State Site FL Row Bay     Shf/Slot EqPEC/Serial
        <FRU> <state> <location> <shelf>/<slot><side> <PEC>/<#>
    Number of critical faults encountered: <n>
    Fault Record Id:
    ==========================================
    <#### ####>
    <#### ####>
    <#### ####>
    <#### ####>
    <#### ####>
    ==========================================
```

Example

An example of log report XAC632 follows.

```
XAC632 OCT26 21:06:27 8200 INFO FW soaking completed
    DESCRIPTION: Soaking of FW is complete (48 hours).
    CARD: Type State Site FL Row Bay     Shf/Slot EqPEC/Serial
        IOP  InSv  HOST 01 A00 DPCC:00  00/02F NTLX03BA/Not/avail
    Number of critical faults encountered: 1
    Fault Record Id:
    ==========================================
     05A2 6000
    ==========================================
```

XAC632 Firmware Soaking Completed (end)

Field descriptions

The following table explains each of the fields in the log report:

Field	Value	Description
<#h>	integer	Indicates the total number of hours soaked from 0 to 240 hours.
<FRU>	character string	Indicates the FRU type is PE, HIOP, IOP, CMIC, ETHR, or AMDI.
<state>	character string	Indicates the FRU state is InSv, SysB, ManB, CBsy or ISTb.
<location>	character string	Indicates the location of XA-Core.
<shelf>	integer	Indicates the shelf number is 0, 1, 2 or 3.
<slot>	integer	Indicates the slot number is 2 to 17.
<side>	character string	Indicates the slot side is front or rear.
<PEC>	alphanumeric	FRU product engineering code NTLXxxxx in format.
<#>	numeric	Indicates the FRU serial number.
<#### ####>	alphanumeric	Indicates the fault record identifier.

Action

If the number of faults is zero, do not take action.

If there are any faults, check the fault records to verify that the new firmware is not the cause of the faults. If the new firmware is causing the faults, revert to the original firmware.

Related OM registers

None.

XAC633 Firmware Loading Started

Explanation

The system generates log XAC633 when the firmware (FW) loading process begins.

Event Type

Information (INFO)

Format

The format for log report XAC633 follows.

```
XACnnn   mmmdd hh:mm:ss ssdd   Event Type   Log Title
      DESCRIPTION: <Description statement>
      CARD: Type State Site FL Row Bay     Shf/Slot      EqPEC/Serial
         <FRU> <state> <location> <shelf>/<slot><side> <PEC>/<#>
```

Example

An example of log report XAC633 follows.

```
XAC633 OCT27 17:53:59 5900 INFO FW loading started
      DESCRIPTION: Loading of FW started.
      CARD: Type State Site FL Row Bay     Shf/Slot      EqPEC/Serial
         PE  ManB  HOST 01 A00 DPCC:00  00/04F    NTLX02AA/Not ava
```

Field descriptions

The following table explains each of the fields in the log report:

Field	Value	Description
Reportid	XAC633	The Reportid field displays the log group (XAC) and identification number of the log report.
Event Type	INFO	The Event Type field displays the type of event identified in the log report.
Log title	Text string	A text string describing the title of the log report.
DESCRIPTION	Text string	Provides details..

XAC633 Firmware Loading Started (end)

Field	Value	Description
<FRU>	character string	Indicates the FRU type is PE, HIOP, IOP, CMIC, ETHR, or AMDI.
<state>	character string	Indicates the FRU state is InSv, SysB, ManB, CBsy or ISTb.
<location>	character string	Indicates the location of XA-Core.
<shelf>	integer	Indicates the shelf number is 0, 1, 2 or 3.
<slot>	integer	Indicates the slot number is 2 to 17.
<side>	character string	Indicates the slot side is front or rear.
<PEC>	alphanumeric	FRU product engineering code NTLXxxxx in format.
<#>	alphanumeric	Indicates the FRU serial number.

Action

None.

Related OM registers

None.

XAC634 Firmware Loading Completed

Explanation

The system generates the log XAC634 when the firmware (FW) loading process completes successfully.

Event Type

Information (INFO)

Format

The format for log report XAC634 follows.

```
XACnnn  mmmdd hh:mm:ss ssdd    Event Type   Log Title
    DESCRIPTION: <Description statement>
    CARD: Type State Site FL Row Bay     Shf/Slot      EqPEC/Serial
        <FRU> <state> <location> <shelf>/<slot><side> <PEC>/<#>
```

Example

An example of log report XAC634 follows.

```
XAC634 OCT27 17:53:59 6000 INFO FW loading completed
    DESCRIPTION: Loading of FW has been completed.
    CARD: Type State Site FL Row Bay     Shf/Slot      EqPEC/Serial
        PE  ManB  HOST 01 A00 DPCC:00  00/04F    NTLX02AA/Not avail
```

Field descriptions

The following table explains each of the fields in the log report:

Field	Value	Description
Reportid	XAC634	The Reportid field displays the log group (XAC) and identification number of the log report.
Event Type	INFO	The Event Type field displays the type of event identified in the log report.
Log title	Text string	A text string describing the title of the log report.
DESCRIPTION	Text string	Provides details.
<FRU>	character string	Indicates the FRU type is PE, HIOP, IOP, CMIC, ETHR, or AMDI.

XAC634 Firmware Loading Completed (end)

Field	Value	Description
<state>	character string	Indicates the FRU state is InSv, SysB, ManB, CBsy or ISTb.
<location>	character string	Indicates the location of XA-Core.
<shelf>	integer	Indicates the shelf number is 0, 1, 2 or 3.
<slot>	integer	Indicates the slot number is 2 to 17.
<side>	character string	Indicates the slot side is front or rear.
<PEC>	alphanumeric	FRU product engineering code NTLXxxxx in format.
<#>	numeric	Indicates the FRU serial number.

Action

None.

Related OM registers

None.

XAC635 Firmware Soaking in Progress

Explanation

The system generates log XAC635 after a restart if a field replaceable unit (FRU) is in the soaking state.

A Firmware Soaking in Progress log report indicates an FWsoak Minor alarm. This alarm indicates that firmware soaking is in progress.

Event Type

Information (INFO)

Format

The format for log report XAC635 follows.

```
XACnnn mmmdd hh:mm:ss ssdd   Event Type   Log Title
      DESCRIPTION: <Description statement>
      CARD: Type State Site FL Row Bay     Shf/Slot      EqPEC/Serial
          <FRU> <state> <location> <shelf>/<slot><side> <PEC>/<#>
```

Example

An example of log report XAC635 follows.

```
XAC635 OCT27 17:07:40 1900 INFO FW soaking in progress
      DESCRIPTION: Soaking of FW is in progress.
      CARD: Type State Site FL Row Bay     Shf/Slot      EqPEC/Serial
          IOP  SysB  HOST 01 A00 DPCC:00  00/02F    NTLX03BA/Not avai
```

Field descriptions

The following table explains each of the fields in the log report:

Field	Value	Description
Reportid	XAC635	The Reportid field displays the log group (XAC) and identification number of the log report.
Event Type	INFO	The Event Type field displays the type of event identified in the log report.
Log title	Text string	A text string describing the title of the log report.
DESCRIPTION	Text string	Provides details.

XAC635 Firmware Soaking in Progress (end)

Field	Value	Description
<FRU>	character string	Indicates the FRU type is PE, HIOP, IOP, CMIC, ETHR, or AMDI.
<state>	character string	Indicates the FRU state is InSv, SysB, ManB, CBsy or ISTb.
<location>	character string	Indicates the location of XA-Core.
<shelf>	integer	Indicates the shelf number is 0, 1, 2 or 3.
<slot>	integer	Indicates the slot number is 2 to 17.
<side>	character string	Indicates the slot side is front or rear.
<PEC>	alphanumeric	FRU product engineering code NTLXxxxx in format.
<#>	numeric	Indicates the FRU serial number.

Action

None.

Related OM registers

None.

XAC637 Baseln Alarm Cleared

Explanation

The system generates the Baseln Alarm Cleared log report when the Baseln major alarm clears, indicating that there are no longer any items of hardware or firmware that are incompatible with the baseline and exception list information in tables PECINV and FWINV.

Event Type

Information (INFO)

Format

The format for log XAC637 follows:

```
  XACnnn  mmmdd  hh:mm:ss  ssdd  Event Type  Log Title
All XAC HW at PECINV baseline. All XAC FW/DLL at FWINV baseline.
```

Example

An example of log XAC637 follows:

```
XASKY07GH   XAC637  JAN15  23:35:16  6100  INFO  Baseln Alarm Cleared
        All XAC HW at PECINV baseline. All XAC FW/DLL at FWINV baseline.
```

Field descriptions

The following table explains each of the fields in log XAC637:

Field descriptions for Baseln Alarm Raised log

Field	Value	Description
Reportid	XAC637	The Reportid field displays the log group (XAC) and identification number of the log report.
Event Type	INFO	The Event Type field displays the type of event identified in the log report.
Log title	Text string: Baseline Alarm Cleared”	A text string describing the title of the log report.

Action

There are no actions for this log.

XAC637 Baseln Alarm Cleared (end)

Associated OM registers

There are no associated OM registers for this log.

XAC640 Manual Test Report

Explanation

The system generates the Manual Test Report log (XAC640) for the following reasons:

- record the results of a manual test request on an XA-Core component
- record the results of a system test request initiated when a new card or packlet is provisioned to a manbusy state.

Event Type

Information (INFO)

Format

The format for log report XAC640 follows.

```
XACnnn  mmmdd  hh:mm:ss ssdd   Event Type   Log Title
      TYPE Link_Num   Slot   Side  Packlet      Test_Type    Result
        tttt       n             nn      frfr   p              test_txt        result_txt
      Initiator: intiator_text
      Reason:  reason_txt
      FAULT RECORD ID: id
```

Example

An example of log report XAC640 follows.

```
XAC640  NOV11  17:50:32 9168  INFO  Test Report
      TYPE Link_Num   Slot   Side Packlet    Test_Type    Result
        SM                    7      R                    InSv             Passed
      Initiator:   Manual Action
```

Field descriptions

The following table explains each of the fields in the log report:

Field	Value	Description
Reportid	XAC640	The Reportid field displays the log group (XAC) and identification number of the log report.
Event Type	INFO	The Event Type field displays the type of event identified in the log report.
Log title	Text string	A text string describing the title of the log report.

XAC640 Manual Test Report (continued)

Field	Value	Description
tttt	character string	Indicates the type of circuit pack (CP), packlet, or link.
n	numeric	Indicates the link number. This field can indicate link 0, link 1, or remain blank. This field remains blank if operating company personnel do not perform a manual test on a link.
nn	alphanumeric	Indicates slot position of the device.
frfr	alphanumeric	Indicates the shelf side location of the CP, packlet, or link. The side location can be front (F) side or rear (R) side of the shelf.
p	alpha	Indicates the position of a packlet on an input/output processor (IOP) CP. The packlet position can be upper (U) or lower (L) position on an IOP CP. The Packlet field remains blank if operating company personnel do not perform a manual test on a packlet.
test_txt	character string	Indicates the type of test. It is inservice (InSv) or out of service (OOS).
result_txt	character string	Indicates if a selected CP, packlet, or link passed, failed or rejected a test.
initiator_txt	character string	Indicates the action that initiated the test and is manual action or system maintenance.
reason_txt	character string	If the test fails, the reason text indicates the reason for the failure.
FAULT RECORD ID	alphanumeric	Indicates the identification number of the record that has a fault.

XAC640 Manual Test Report (end)

Action

No immediate action.

Related OM registers

None.

This page is left blank intentionally.

XAC641 Alarm Enable/Disable Notification

Explanation

This log indicates that an XA-Core alarm has been enabled or disabled by a user. Once an alarm has been disabled, it remains disabled until a user re-enables it or until a restart or SWACT occurs.

> ***Note:*** For information on enabling and disabling alarms, see the chapter "Understanding the alarm system" in the *XA-Core Maintenance Manual*, 297-8991-510.

Event Type

Information (INFO)

Format

The format for log report XAC641 follows.

```
XACnnn  mmmdd hh:mm:ss  ssdd   Event Type   Log Title
        <Alarm-name> is <Alarm-state> by <User-name>
```

Example

An example of log report XAC641 follows.

```
XAC641  JUN12 10:38:59  1900  INFO Alarm Enable/Disable Notification
        FWvers is Disabled by ADMIN
```

XAC641 Alarm Enable/Disable Notification (end)

Field descriptions

The following table explains each of the fields in log XAC641:

Field descriptions for the Alarm Enabled/Disabled Notification log

Field	Value	Description
Reportid	XAC641	The Reportid field displays the log group (XAC) and identification number of the log report.
Event Type	INFO	The Event Type field displays the type of event identified in the log report.
Log title	Text string	A text string describing the title of the log report.
Alarm-name	Text string, up to six characters	The name of the XA-Core alarm that has been enabled or disabled.
Alarm-state	Text field, up ti eight characters	The new state of the XA-Core alarm. Possible values are Enabled and Disabled.
User-name	Text field, up to eight characters	The name of the user who enabled or disabled the alarm.

Action

No immediate action.

Related OM registers

None.

Additional information

There is no XA-Core system alarm to indicate that an alarm has been disabled.

If an alarm has an associated OM usage register that records the length of time during which that alarm is raised, the register records the value regardless of whether the alarm is enabled or disabled.

The XA-Core Summary Report log (XAC400) includes a list of any alarms that are disabled.

XAC801 MemLim (Memory Limit)

Explanation

The system generates the Memory Limit (MemLim) log (XAC801) report when the available memory resources on the XA-Core drop below the major or minor alarm thresholds.

The MemLim log report indicates the recommended action that operating company personnel can follow to correct the condition.

A MemLim log report indicates one of the following alarm levels:

- MemLim Major alarm: The available memory has dropped below an alarm threshold.
- MemLim Minor alarm: The system has used 90% of the available address space.

When the MemLim condition clears, the system generates the MemLim Condition Cleared log (XAC601) report.

Event Type

Trouble (TBL)

Format

The format for log XAC801 follows:

```
Severity XACnnn mmmdd  hh:mm:ss   ssdd   Event Type   Title text
         IMPACT:<System Impact Statement>
         ACTION:<Action Statement>
```

Example

An example of log XAC801 follows:

```
*    XAC801   MAR08  14:15:57   6700  TBL  MemLim (Memory Limit)
        IMPACT: A minor memory limit has been reached.
                Either the amount of available data-store is 32768kb or less
                or the amount of available program-store is 8192kb or less
                or both.
        ACTION: Contact next level of support.
```

XAC801 MemLim (Memory Limit) (end)

Field descriptions

The following table explains each of the fields in log XAC801:

Field descriptions for MemLim log

Field	Value	Description
Severity	One asterisk (*)	Displays the severity of the associated alarm. Two astericks (**) indicate a major alarm condition. Avaialble memory is below the major memory limit threshold for data-store or program-store. One asterisk (*) indicates a minor alarm condition. Available memory is below the minor memory limit threshold for data-store or program-store.
Reportid	XAC801	The Reportid field displays the log group (XAC) and identification number of the log report.
Event Type	TBL	The Event Type field displays the type of event identified in the log report.
IMPACT	Text string	The Impact field describes the impact of the condition to the XA-Core.
ACTION	Text string	The Action field recommends the action that operating company personnel can take to correct the problem identified in the log report.

Actions

Contact the next level of support.

Associated OM registers

XASM

XAC814 XATrap

Explanation

A trap is a software or hardware error that causes an interruption of the software process that is executing when the error occurs. If the rate of XA-Core traps exceeds the restart threshold value, a warm restart occurs.

The system generates the XATrap log (XAC814) report when the rate of XA-Core traps (number of traps per minute) exceeds the XATRAP alarm threshold.

The XATrap log report indicates the recommended action that operating company personnel can follow to correct the condition.

An XATrap log report indicates an **XATrap Major alarm** condition. This alarm condition means the trap rate (number of traps per minute) has exceeded the XATRAP alarm threshold.

When the XATRAP alarm condition clears, the system generates the XATrap Alarm Cleared log (XAC614).

Event type

Trouble (TBL)

Format

The format for log XAC814 follows:

```
 Severity XACnnn mmmdd hh:mm:ss ssdd  Event Type  Title text
          IMPACT:  <System Impact Statement>
          Current Trap Rate:   <new trap rate>
          XATrap Alarm Threshold:   <trap rate threshold>
          ACTION:  <Action Statement>
```

Example

An example of log XAC814 follows:

```
**    XAC814  JAN01 14:56:13  0011  TBL  XATRAP (XA-Core High Trap Rate)
         IMPACT:  Trap rate approaching level where restart may occur.
         Current Trap Rate:   6
         XATrap Alarm Threshold:   6
         ACTION:  Contact next level of support.
```

XAC814 XATrap (end)

Field descriptions

The following table explains each of the fields in log XAC814:

Field descriptions for XATrap log

Field	Value	Description
Alarm	Two asterisks (**)	Displays the severity of the associated alarm. Two asterisks (**) indicates a major alarm condition. The trap rate (number of traps per minute) has exceeded the XATRAP alarm threshold.
Reportid	XAC814	The Reportid field displays the log group and identification number of the log report.
Event Type	TBL	The Event Type field displays the type of event identified in the log report.
IMPACT	Text string	The Impact field describes the impact of the condition to the XA-Core.
Current Trap Rate	Numeric	The Current Trap Rate field indicates the new trap rate (number of traps per minute) on the XA-Core.
XATrap Alarm Threshold	Numeric	The XATrap Alarm Threshold field indicates the trap rate (number of traps per minute) at which the XATRAP alarm condition generates.
ACTION	Text string	The Action field recommends the action that operating company personnel can take to correct the problem identified in the log report.

Action

Contact the next level of support.

Associated OM registers

XATrap

XACP300 Memory Blocking High

Explanation

Log XACP300 is generated once in every minute during which the system detects a high memory blocking condition.

Memory blocking occurs because XA-Core has a dynamic memory-ownership mechanism. A process will be blocked from proceeding if it tries to access memory that is currently owned by another process.

Memory blocking is a normal part of system behavior. Unusually high levels of blocking may indicate problems that require investigation.

> ***Note:*** The levels that constitute normal memory blocking and high memory blocking for a given software system can be determined only by conducting testing on the software. This analysis is performed by Nortel Networks system-engineering personnel, before the software becomes available to customers.

Event type

Trouble (TBL)

Format

The format for log XACP300 follows:

```
 Severity XACPnnn mmmdd  hh:mm:ss ssdd Event Type Log Title
         hh:mm Memory Blocking: High
         Please contact your next level of support.
```

Example

An example of log XACP300 follows:

```
** XACP300 JAN02 12:20:17 0100 TBL Memory Blocking High
         12:20 Memory Blocking: High
         Please contact your next level of support.
```

XACP300 Memory Blocking High (end)

Field descriptions

The following table explains each of the fields in log XACP300:

Field descriptions for Memory Blocking High log

Field	Value	Description
Severity	Two asterisks (**)	Displays the log severity.
Reportid	XACP300	The Reportid field displays the log group (XAC) and identification number of the log report.
Event Type	TBL	The Event Type field displays the type of event identified in the log report.
Log title	Text string	A text string describing the title of the log report.

Action

Contact the next level of support.

Associated OM registers

There are no OM registers associated with this log.

Additional information

During the first ten minutes of a restart, the system collects memory-blocking data but it will not generate the XACP300 log. The reason is that high levels of memory blocking are expected to occur during this time.

XACP310 Sustained Overload

Explanation

Log XACP310 is generated if, during a log-generation interval, the XA-Core has detected an overload condition for more than 50% of the time.

The log-generation interval is set to two minutes. If the two-minute interval length is not suitable for you, it is possible to increase the length, up to 15 minutes. If you need such an increase, please contact Nortel Networks support.

The XA-Core performs overload analysis every second. It monitors for Callp (call processing) overload and for IO (input/output) overload. When it detects an overload condition, it throttles new incoming originating calls until the overload condition has been rectified.

Under normal conditions, an overload condition does not require any manual intervention. However, if a sustained overload condition exists over a long period, the overload may degrade the office performance and require further investigation.

Event type

Trouble (TBL)

Format

The format for log XACP310 follows:

```
Severity  XACPnnn mmmdd  hh:mm:ss ssdd Event Type Log Title
        Reason: <Reason statement>
        Action: Please contact your next level of support.
```

Possible values for the “reason” field are as follows:

- IO related
- Callp related
- Callp and IO related

XACP310 Sustained Overload (end)

Example

An example of log XACP310 follows:

```
**  XACP310 DEC02 10:30:45 0700 TBL Sustained Overload
        Reason: IO related
        Please contact your next level of support.
```

Field descriptions

The following table explains each of the fields in log XACP310:

Field descriptions for Sustained Overload log

Field	Value	Description
Severity	Two asterisks (**)	Displays the log severity.
Reportid	XACP310	The Reportid field displays the log group (XAC) and identification number of the log report.
Event Type	TBL	The Event Type field displays the type of event identified in the log report.
Log title	Text string	A text string describing the title of the log report.
REASON	Text string	Provides details about the overload.

Action

Contact the next level of support if the overload condition is sustained over a long period.

Associated OM registers

For IO related overload, see the registers in the IOCAP OM group. For information on the IOCAP OM group, see the description of the OM group in this document, in the chapter titled “XA-Core operational measurements”.

For Callp related overload, see the OVRLD register in the CP2 OM group. For information on the register, see the description of the CP2 OM group in either of the following documents

- *Succession OMs*, NN10264-709
- *North American DMS-100 Operational Measurements Reference Manual*, 297-8021-814

XACP500 Memory Blocking Normal

Explanation

The system generates log XACP500 when memory blocking declines from the high level to the normal level. This log indicates that the high memory blocking condition has cleared.

Memory blocking occurs because XA-Core has a dynamic memory-ownership mechanism. A process will be blocked from proceeding if it tries to access memory that is currently owned by another process.

> ***Note:*** The levels that constitute normal memory blocking and high memory blocking for a given software system can be determined only by conducting testing on the software. This analysis is performed by Nortel Networks system-engineering personnel, before the software becomes available to customers.

Event type

Information (INFO)

Format

The format for log XACP500 follows:

```
XACPnnn mmmdd  hh:mm:ss ssdd   Event Type   Log Title
  hh:mm Memory Blocking: Normal
```

Example

An example of log XACP500 follows:

```
XACP500 JAN02 02:25:17 0400 INFO Memory Blocking Normal
        2:25 Memory Blocking: Normal
```

XACP500 Memory Blocking Normal (end)

Field descriptions

The following table explains each of the fields in log XACP500:

Field descriptions for Memory Blocking Normal log

Field	Value	Description
Reportid	XACP500	The Reportid field displays the log group (XAC) and identification number of the log report.
Event Type	INFO	The Event Type field displays the type of event identified in the log report.
Log title	Text string	A text string describing the title of the log report.

Action

There are no actions for this log.

Associated OM registers

There are no OM registers associated with this log.

XACP600 Memory Blocking Summary

Explanation

Log XACP600 is generated automatically once every 15 minutes, to report the levels of memory blocking on the switch during the preceding 15 minutes.

Memory blocking occurs because XA-Core has a dynamic memory-ownership mechanism. A process will be blocked from proceeding if it tries to access memory that is currently owned by another process.

Memory blocking is a normal part of system behavior. Unusually high levels of blocking may indicate problems that require investigation.

> ***Note:*** The levels that constitute normal memory blocking and high memory blocking for a given software system can be determined only by conducting testing on the software. This analysis is performed by Nortel Networks system-engineering personnel, before the software becomes available to customers.

Event type

Information (INFO)

Formats

For log XACP600, there is a long format and a short format. The system uses the long format if the blocking level has not been normal during each of the preceding 15 minutes. The long format is as follows:

```
XACPnnn mmmdd  hh:mm:ss ssdd Event Type Log Title
       hh:mm Memory Blocking: <level>
       hh:mm Memory Blocking: <level>
       hh:mm Memory Blocking: <level>
       hh:mm Memory Blocking: <level>
       hh:mm Memory Blocking: <level>
       hh:mm Memory Blocking: <level>
       hh:mm Memory Blocking: <level>
       hh:mm Memory Blocking: <level>
       hh:mm Memory Blocking: <level>
       hh:mm Memory Blocking: <level>
       hh:mm Memory Blocking: <level>
       hh:mm Memory Blocking: <level>
       hh:mm Memory Blocking: <level>
       hh:mm Memory Blocking: <level>
       hh:mm Memory Blocking: <level>
```

XACP600 Memory Blocking Summary (continued)

If the blocking level has been normal during each of the preceding 15 minutes, the system uses the short format. The short format is as follows:

```
XACPnnn mmmdd  hh:mm:ss ssdd Event Type Log Title
       Memory Blocking has been Normal during the last 15 minutes.
```

Examples

An example of the long format of log XACP600 follows:

```
XACP600 JAN02 12:30:17 0900 INFO Memory Blocking Summary
        12:29 Memory Blocking: Normal
        12:28 Memory Blocking: Normal
        12:27 Memory Blocking: High
        12:26 Memory Blocking: High
        12:25 Memory Blocking: High
        12:24 Memory Blocking: High
        12:23 Memory Blocking: High
        12:22 Memory Blocking: High
        12:21 Memory Blocking: High
        12:20 Memory Blocking: High
        12:19 Memory Blocking: Normal
        12:18 Memory Blocking: Normal
        12:17 Memory Blocking: Normal
        12:16 Memory Blocking: Normal
        12:15 Memory Blocking: Normal
```

An example of the short format of log XACP600 follows:

```
XACP600 FEB07 18:30:12 6000 INFO Memory Blocking Summary
        Memory Blocking has been Normal during the last 15 minutes.
```

XACP600 Memory Blocking Summary (end)

Field descriptions

The following table explains each of the fields in log XACP600:

Field descriptions for Memory Blocking Summary log

Field	Value	Description
Reportid	XACP600	The Reportid field displays the log group (XAC) and identification number of the log report.
Event Type	INFO	The Event Type field displays the type of event identified in the log report.
Log title	Text string	A text string describing the title of the log report.

Action

There are no actions for this log.

Associated OM registers

There are no OM registers associated with this log.

This page is left blank intentionally.

4 XA-Core MAP levels and user interfaces

This chapter contains information about the following topics:

- the XA-Core MAP levels
- the RTIF commands

Introduction

The XA-Core MAP level system provides a visible and interactive means to monitor and maintain the XA-Core system. The XA-Core MAP system displays real-time information on the current working status of the XA-Core system. The XA-Core MAP system reports events that have an effect on service.

The XA-Core MAP level interface and message system helps to guide you through maintenance procedures.

MAP features and functions

The XA-Core MAP level system allows you to monitor the following system-related functions:

- a change of operational state in XA-Core equipment
- an increase or decrease in system memory or processing or in input/output (I/O) resources
- responses to commands

The following features are common to each XA-Core MAP level:

- The MAP hierarchy is flat. You can move between any XA-Core MAP without moving through a MAP level that is higher in the MAP level hierarchy.
- The alarm banner and subsystem status summary field area (SSSF) always display the latest equipment information.

- The SSSF area displays the number of out-of-service (OOS) circuit packs (CPs) or packlets for each subsystem. The shared memory (SM), processor element (PE), input/output (IO) and packlets (PKLT) make up the subsystems.
- The shelf layout area displays the slot number assignments for CPs and packlets in the physical shelf, the equipment status and the shelf provisioning.

XA-Core MAP hierarchy

The XA-Core portion of the MAP level hierarchy is flat. You can move quickly between the XA-Core MAP levels.

The XA-Core MAP levels are as follows:

- XAC (extended architecture core)
- XACMtc (extended architecture core maintenance)
- SM (shared memory)
- PE (processor element)
- IO (input/output)
- CMIC (core message switch interconnect)
- RTIF (reset terminal interface)
- Tape
- Disk (hard disk)
- AMDI
- ETHR

Figure 4-1 shows the XA-Core MAP structure in context with other DMS system MAP branches.

Figure 4-1 MAP level hierarchy

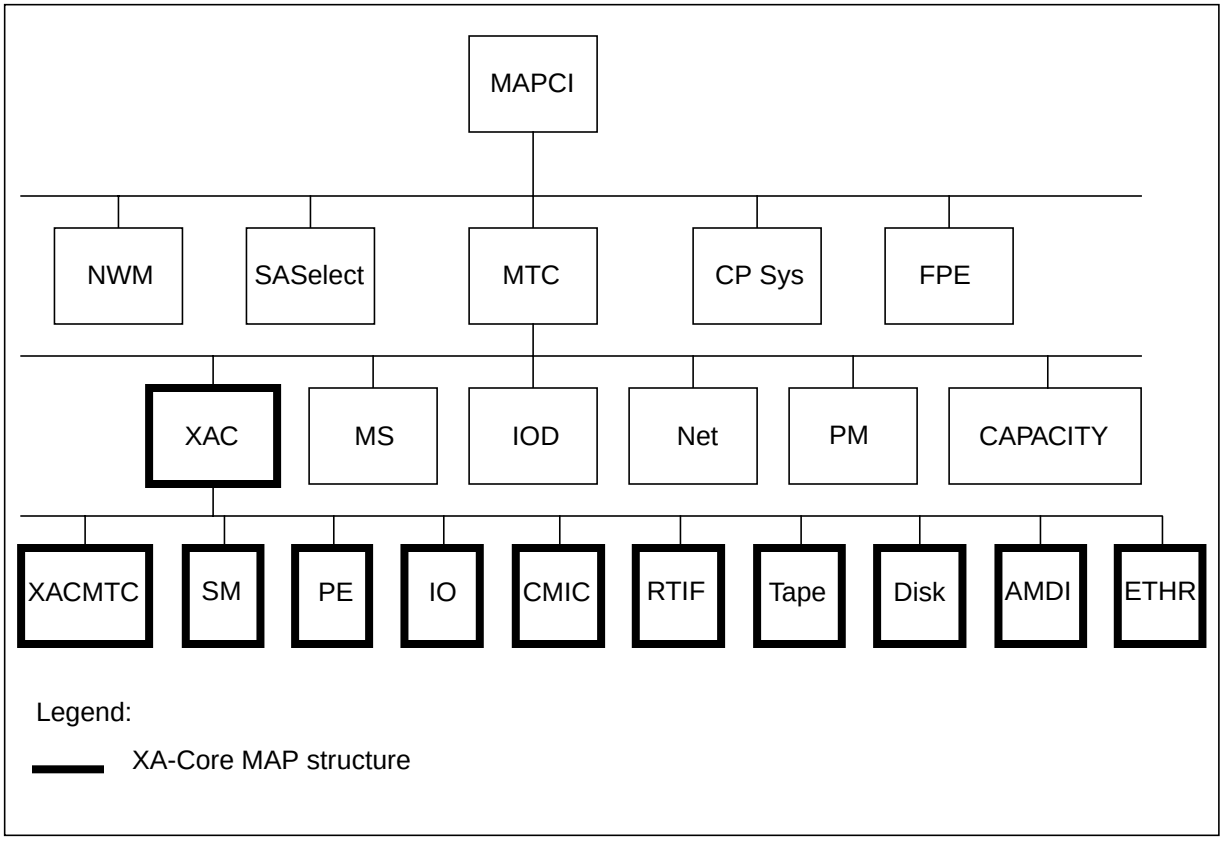

Select MTC (maintenance) from the MAPCI MAP level to access the DMS MTC MAP level. Select XAC from the DMS MTC MAP level to access the XA-Core MAP levels.

Note: For information on the CAPACITY MAP level, which is accessed through the MAPCI and MTC levels, see the chapter titled "Capacity-monitoring tools in an XA-Core" in this document.

XA-Core MAP layout

The XA-Core MAP system displays real-time information on the current working state of the XA-Core system. XA-Core system software monitors different activities and reports faults or changes in state to the MAP terminal (see Figure 4-2).

There are seven areas on the MAP display that provide the following information:

- Alarm banner: The alarm banner displays system level alarms raised as a result of equipment faults or on reaching or exceeding threshold values.
- Subsystem status summary field (SSSF) area: The SSSF area displays the number of OOS CPs and packlets in each subsystem (SM, PE, IO, PKLT). The SSSF area also displays a code that indicates the reason for the most critical subsystem fault.
- XA-Core shelf layout area: The shelf layout area displays the location (physical slot numbers) and the state of the CPs. The CP slot numbers match the labels on the shelf slot. The front physical slot numbers range from 1 to 18. The rear CP physical slot numbers range from 4 to 15. The status field displays the working state of the CP.
- Command interpreter output area: The command interpreter output area displays the command as entered, and the system responses or messages.
- Command menu: The command menu displays a selection of commands that allow you to perform maintenance activities. The command menu allows you to examine the system status or move through the MAP system.
- Command interpreter input area: The command interpreter input area represents the part of the MAP display reserved for command entry.
- User ID and time display area: The user ID and time field displays the user identification for the current session and the system time (24hr clock). The system time format is hh:mm (where hh is the hour and mm is the minutes).

Figure 4-2 is an example of a standard XA-Core MAP display. The example shows the components common to all MAP levels.

Note: The shaded areas (except the command menu) shown in Figure 4-2, indicate the different fields.

Figure 4-2 MAP level layout

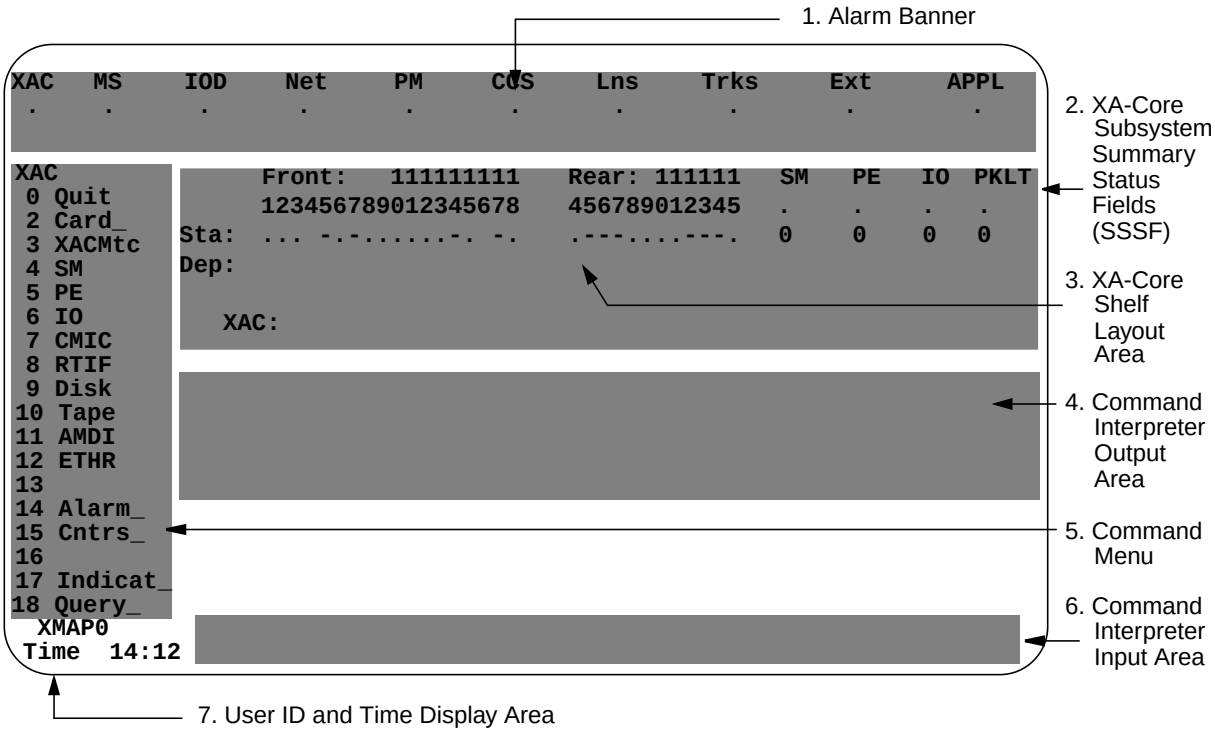

Alarm banner

The first three lines at the top of the MAP display make up the alarm banner. The alarm banner displays the following information:

1. DMS system headers: The DMS headers permanently display a set of titles that indicates the different switch components. The XA-Core MAP system displays the DMS headers on all XA-Core MAP levels.
2. Alarm status codes: The alarm status codes indicate the system alarm status. The alarm status fields display the alarm status code under each of the DMS headers. If there are multiple faults in a single switch system, the alarm status field displays the most important.
3. Alarm severity: The alarm severity field displays the severity of the alarm condition. Each DMS subsystem reports on critical, major and minor alarm conditions. If there are multiple faults in a single switch system, the alarm severity field displays the most important fault (see Figure 4-2 and

Figure 4-3). The alarm banner displays the alarm severity under the XAC header.

The possible alarm severity conditions are as follows:

- blank (no alarm)

  blank (Minor alarm)
- M (Major alarm)
- C (Critical alarm)

Note: A blank alarm severity value indicates either no alarm or a minor alarm (if the alarm status field displays an alarm code).

The XA-Core alarm banner shows one active alarm at a time in the alarm status code field. The alarm banner displays the most important alarm.

Figure 4-3 MAP alarm banner

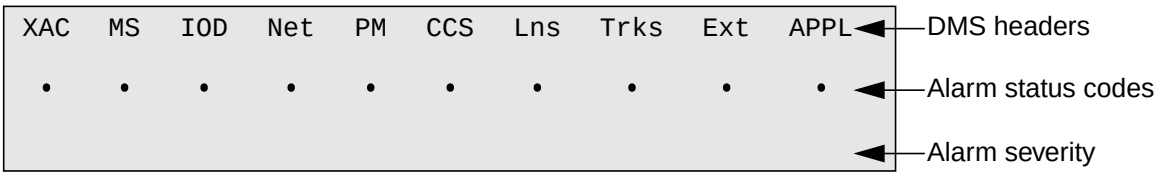

MAP subsystem status summary field

The subsystem status summary field (SSSF) displays the working status of the equipment. The SSSF includes three rows that display the following information:

1. **Subsystem headers**: The subsystem headers permanently display a set of titles that describe the different XA-Core subsystems. The headers match the system CP types.
2. **Hardware alarm codes**: The hardware alarm code fields display hardware alarms for each subsystem type. If there are multiple faults in a single CP/packlet type, the hardware alarm field displays the most important.
3. **OOS CP/packlet count**: The OOS CP/packlet count fields display the total number of out-of-service CPs or packlets in each of the subsystems. The count can increase for each alarm condition. The count does not increase for non-critical device faults and trouble conditions.

Figure 4-4 XA-Core MAP subsystem status summary field

Table 4-1 shows the SSSF equipment alarms of CPs. The equipment alarms of CPs are under the headers PE, SM, and IO in the SSSF of the MAP display. A CP is an FRU that has a product engineering code (PEC). The table shows a fault/state description for each SSSF equipment alarm.

Table 4-1 Equipment alarms of cards in SSSF fields SM/PE/IO of XA-Core levels of the MAP

Fault/State Description	SM	PE	IO
Critical fault	SMfl	PEfl	IOPfl
Cannot detect FRU	noCard	noCard	noCard
Inactive FRU	split	split	split
REx Test	RExTst	RExTst	RExTst
ManB FRU	SM M	PE M	IOP M
FRU trouble	SMtb	PEtb	IOPtb
Slot not provisioned	badPEC	badPEC	badPEC
Unknown fault	SM ?	PE ?	IOP ?
Firmware fault	SMfw	PEfw	IOPfw

Tables 4-2 and 4-3 show the SSSF equipment alarms of packlets. The equipment alarms are under the header PKLT in the SSSF of the MAP display. The tables show the equipment alarms for different types of packlets. The table also shows a fault/state description for each SSSF equipment alarm.

Table 4-2 Equipment alarms of packlets in SSSF field PKLT of XA-Core levels of the MAP

Fault/State Description	PKLT					
	CMIC	**TOD**	**MS link**	**RTIF**	**Local RTIF**	**Remote RTIF**
Cannot correct fault	CMICfl	TODfl	LINKfl	RTIFfl	LocPfl	RemPfl
Inactive FRU	split	split	split	split	split	split
REx test	RExTst	RExTst	RExTst	RExTst	RExTst	RExTst
RIB key not removed				RIBkey	RIBkey	RIBkey
CMIC isolation	XAisol					
TOD isolation		TODflt				
MS TOD fault		MSTOD				
ManB FRU	CMIC M			RTIF M	LocP M	RemP M
Dependency busy FRU	CMIC C	TOD C	LINK C	RTIF C	LocP C	RemP C
FRU trouble	CMICtb	TODtb	LINKtb	RTIFtb	LocPtb	RemPtb
Slot not provisioned	badPEC			badPEC		
Unknown fault	CMIC ?	TOD ?	LINK ?	RTIF ?	LocP ?	RemP ?

Table 4-3 Equipment alarms of packlets in SSSF field PKLT of XA-Core levels of the MAP

Fault/State Description	PKLT			
	Disk	**Tape**	**AMDI**	**ETHR**
Cannot correct fault	DISKfl	TAPEfl	AMDIfl	ETHRfl
Inactive FRU	split	split	split	split
REx test	RExTst	RExTst	RexTst	RexTst
RIB key not removed				
CMIC isolation				
TOD isolation				
MS TOD fault				
ManB FRU	DISK M	TAPE M	AMDI M	ETHR M
Dependency busy FRU	DISK C	TAPE C	AMDI C	ETHR C
FRU trouble	DISKtb	TAPEtb	AMDItb	ETHRtb
Slot not provisioned	badPEC	badPEC	badPEC	badPEC
Unknown fault	DISK ?	TAPE ?	AMDI ?	ETHR ?

MAP shelf layout area

The shelf layout area displays the CP/packlet status and type (see Figure 4-5). The shelf layout area is a model of the side and slot numbers for the XA-Core physical shelf. The shelf layout area includes four rows that display the following information:

1. **Physical side numbers**: The physical side (front/rear) field displays the position of the CPs or packlets in the physical shelf. A single or two-digit number indicates the physical slot positions on the physical side.
2. **Status indicator field**: The status (Sta) field displays a symbol under all slot numbers. The Status field indicates the working current state of the CPs. The field displays the test status of a CP or a faulty, OOS packlet. For detailed information about the symbols used in this field, see Table 4-4.
3. **Dependency indicator field**: The dependency (Dep) field displays the current working state of an IOP. This field displays one of the status code characters for each packlet. For detailed information about the symbols used in this field, see Table 4-5.
4. **Type indicator field**: The type (Typ) field displays an asterisk (“*”) to indicate the location of a specific CP/packlet type. For detailed information about the symbols used in this field, see Table 4-6.

Figure 4-5 XA-Core MAP shelf layout area

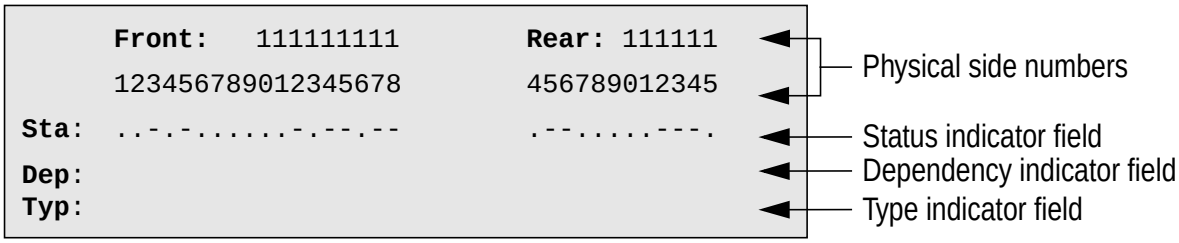

Table 4-4 Symbols used in the status indicator field

Symbol	Meaning
(blank)	Slot not addressable
.	InSv (In-Service) status for CP in slot
-	Slot is not equipped
C	Cbsy (Central side Busy) status for CP in slot
I	IsTb (In-Service Trouble) status for CP in slot
M	ManB (Manual Busy) status for CP in slot
S	SysB (System Busy) status for CP in slot
X	Split mode status for CP in slot

Table 4-5 Symbols used in the dependency indicator field

Symbol	Meaning
(blank)	No dependency
T	Under Test status - The “T” symbol indicates that the CP in the matching physical side number field is under test. The field displays a blank after the test is complete.
F	Dependency Fault status - The “F” symbol indicates that a packlet in the matching physical side number field has a fault or is OOS.

Note: If the MAP dependency symbols “T” and “F” are both valid for a given slot at the same time, “T” overwrites “F”.

Table 4-6 Symbols used in the type indicator field

Symbol	Meaning
(blank)	A blank indicates the slots that commands of the current MAP level cannot process a command on.
* (asterisk)	An asterisk indicates the slots that the current MAP level can process a command on.

MAP command menu

The command menu contains a list of commands for the MAP level on display. MAP commands that appear on more than one MAP level use the same menu command number. The command menu displays a underline symbol (_) to indicate that a command parameter is necessary.

Enter the MAP command in the command interpreter input area.

MAP command interpreter output area

The command interpreter output area displays a response to the last user-supplied command. The system displays a message in the command interpreter output area in response to each new command.

MAP command interpreter input area

The command interpreter input area indicates the last user-supplied menu or non-menu command.

MAP user and time display area

The User and Time display area indicates the user identification for the current session and the time. The example below shows the time format.

XMAP0

`Time hh:mm` (where hh is the hour and mm is the minutes)

MAP commands

The MAP system displays a command menu on all XA-Core MAP screens. Each MAP level menu displays a different set of commands.

MAP commands allow you to perform the following tasks:

- Perform basic equipment operations. Operation (Op) menu commands use menu numbers seven to fourteen (8 - 14). Example operation commands are Test (Tst_), Manual busy (Bsy_) or return to service (RTS_).
- Move through the MAP system. Navigate (Nav) menu commands hold menu numbers zero to six (0 - 7). The navigation commands allows you to move between different MAPs, for example CMIC, SM, PE and IO.
- Display equipment status information. Information (Info) menu commands use menu numbers fifteen to eighteen (15 - 18). Example information commands are Query_ or Indicat_.

Menu commands

Menu commands appear on the MAP menu list. Enter the command name or the command menu number as it appears in the MAP terminal. Commands that end with an underline (_) require command parameters. You can also enter a command option (if available and necessary).

Hidden commands

Hidden commands do not appear on any MAP level menu list. The abort task (AbTk), Help and print map (PRTMAP) common, hidden commands do not appear on any XA-Core MAP command menu area. Use hidden commands for occasional maintenance purposes.

ABORT

The abort (ABORT) command aborts another command before the other command enters to task. Use the ABORT command when the command that you abort has not started a task.

AbTk

Abort the task currently executing on a specific CP or packlet. The XA-Core system cannot abort a Bsy_ command.

Help

Display instructions on how to use the command.

PRTMAP

Display the current contents of the MAP using remote devices. Use the PRTMAP command with non-MAP devices such as TTYs. Use the RTIF when the message switch (MS) links are not operating.

MAP command characteristics

There are three MAP command characteristics:

1. **Common commands:** Common command apply to all XA-Core MAP levels. The function, parameters, options and results of these commands are the same for all MAP levels. Common commands always appear on all MAPs in the same menu list position.
2. **Non-menu common commands:** Non-menu common commands do not appear on the MAP command menu. All MAP levels use non-menu common commands.
3. **Non-menu commands:** Non-menu commands appear only on the XAC MAP level command menu. Some non-menu commands control how you can move through the MAP hierarchy. The function, behavior of parameters, options and results of these commands are the same for all MAP levels.

MAP command syntax

Command syntax are the rules that the XA-Core system uses to understand and execute the command input. A command is made-up of the menu command name (or menu number), parameters and options. The command name forms the core task. The command parameters identify the XA-Core equipment or tell the system how to execute the command. The option defines the limits of the command task.

Some commands, such as those that allow you to move from one MAP level to another, do not use parameters or options. Parameters or options alone, are not understood by the XA-Core system as a command. The XA-Core system syntax requires entry of the command name first; the parameters after the command and; the options after the parameters. Insert a space between the command, the parameters and the option. You can use the command menu number in place of the command name. If a command task does not use parameters, the command line can include the command name and an option.

The table below shows the command description, how this document describes the command format and example command use. Enter a MAP command in the format as shown by one of the descriptions in the following table.

Table 4-7 Command syntax description

Command Description	Document format	Example
Command only	COMMAND	IMAGE
Command + parameter	COMMAND <parameter>	BSY 7 u
Command + parameter + option	COMMAND <parameter> [option]	BSY 7 u force
Command + parameter + option + option	COMMAND <parameter> [option] [option]	BSY 7 u force noprompt

MAP command cross-reference

Table 4-8 shows, in alphabetical order, all the XA-Core MAP commands.

- A blank space indicates an invalid, non-displayed MAP level command.
- Numbers indicate the command menu number unique to the MAP level.
- An uppercase marker (**N**) indicates a non-menu command

Table 4-8 XA-Core MAP command reference

Com-mand	Type	XAC	XAC Mtc	PE	SM	IO	CMIC	RTIF	DISK	TAPE	AMDI	ETHR
Alarm_	Op/Info	14	14	14	14	14	14	14	14	14	14	14
AMDI	Nav	11	N	N	N	N	N	N	N	N		N
Bsy_	Op			7	7	7	7	7	7	7	7	7
Card_	Nav	2										
CMIC	Nav	7	N	N	N	N		N	N	N	N	N
Cntrs	Info	15		15	15	15	15	15	15	15	15	15
Disk	Nav	9	N	N	N	N	N	N		N	N	N
ETHR	Op	12	N	N	N	N	N	N	N	N	N	
Format_	Op								11			
Image	Op		11									
Indicat_	Info	17	17	17	17	17	17	17	17	17	17	17
IO	Nav	6	N	N	N		N	N	N	N	N	N
LoadFW	Op			10		10	10				10	10
PE	Nav	5	N		N	N	N	N	N	N	N	N
Query_	Info	18	18	18	18	18	18	18	18	18	18	18
Quit	Nav	0	0	0	0	0	0	0	0	0	0	0
RExInt_	Op/Info		13									
RExTst_	Op		12									
Route_	Op						13					
RTIF	Nav	8	N	N	N	N	N		N	N	N	N
RTS_	Op			8	8	8	8	8	8	8	8	8
SM	Nav	4	N	N		N	N	N	N	N	N	N
Tape	Nav	10	N	N	N	N	N	N	N			
Tst_	Op			6	6	6	6	6	6	6	6	6
Trnsl_	Info			16	16		16					
Uneq_	Op			12	12	12	12	12	12	12	12	12
XACMtc	Nav	3		N	N	N	N	N	N	N	N	N

Figure 4-6 shows all MAP level menus.

Figure 4-6 XA-Core subsystem menu display

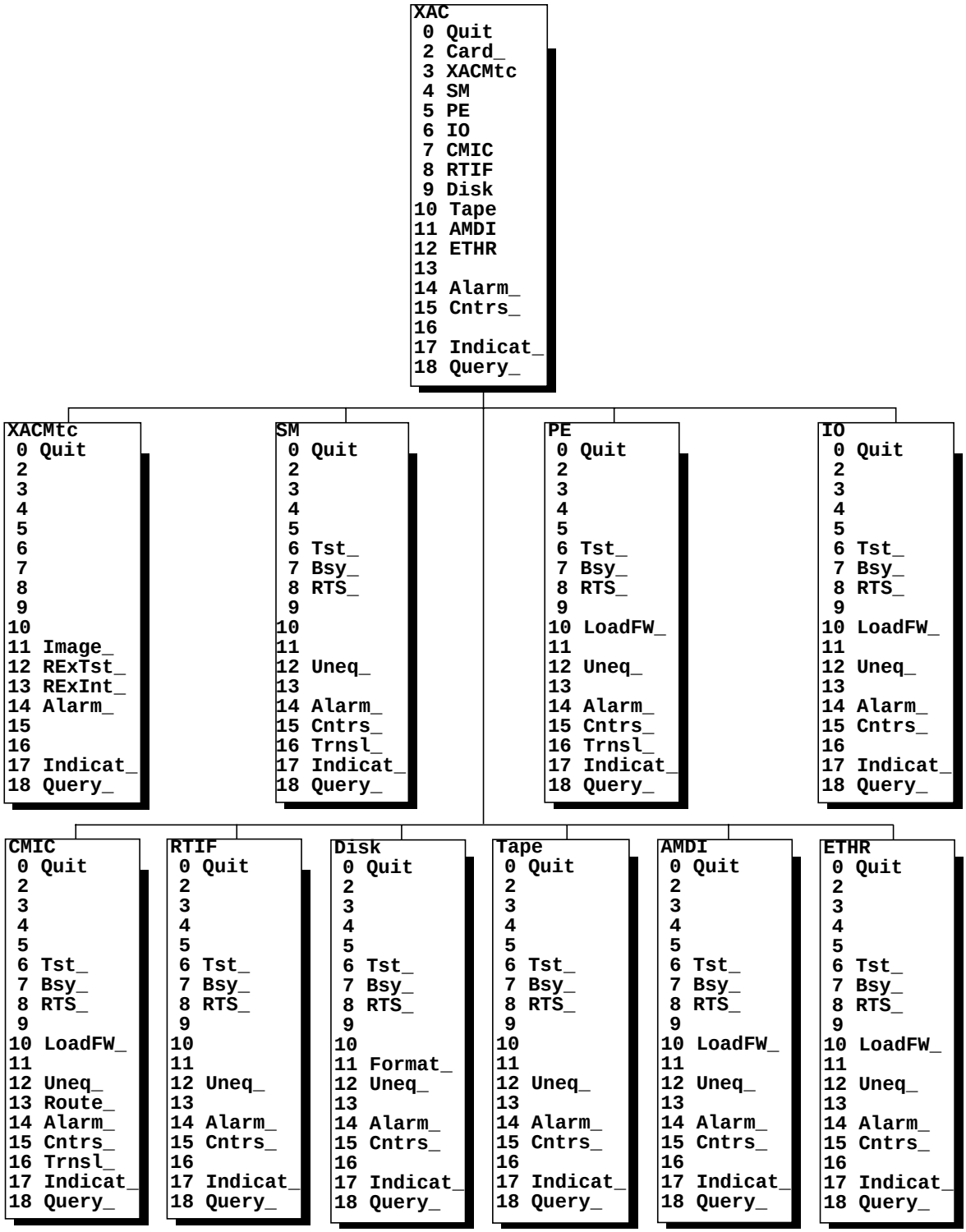

MAP command parameters

Commands often need parameters or parameter values to complete a command statement and execute a command task. All commands that require a parameter display a "_" symbol in the command menu. Enter the menu command and the command parameter together, as one command request. Enter the parameter as shown in the parameter list or as a variable value.

Get variable values from the MAP display or office information. The following describes command parameter use.

All

Use the <all> parameter with the Alarm_, Query_, RExTst_ and Quit commands.

- Alarm_ command: Use the <all> parameter with the <disable> or <enable> parameters to disable or enable notification of all alarm types.
- Query_ command: Use the <all> parameter to display the status for all alarm types.
- RExTst_ command: Use the <all> parameter to perform a REx test on all REx test classes. The system performs a REx test (both InSv and OOS tests) on all subsystems (PE, SM and IO).
- Quit command: Use the <all> parameter to end all MAP sessions and display the CI prompt.

Address

Use the <address> parameter with the Trnsl_ command. Enter a PE memory address value (slot number, position, page & offset). The MAP displays the location of the CP that has the requested memory block address.

Alarm_name

Use the <alarm_name> parameter with the Alarm_ command. The XA-Core system performs a query on the alarm and the MAP displays the status of the alarm.

Card

Use the <card> parameter with the Indicat_ and Query_ commands. The parameter instructs the XA-Core system to indicate a single CP location. Use with the CP or packlet shelf location parameters (nn, s, and p).

Change

Use the <change> parameter with the Image_ command. The <change> parameter instructs the system to change the restart type (warm, cold, reload) after the next image test.

Clear

Use the <clear> parameter with the Indicat_ command. The <clear> parameter returns the LEDs to a normal working state.

Clearall

Use the <clearall> parameter with the Indicat_ command. The <clearall> parameter returns all LEDs to a normal working state (see Indicat_ Testall command).

Clearday

Use the <clearday> parameter with the RExInt_ command. The <clearday> parameter clears the daily schedule for a full XA-Core REx test.

Cold

Use the <cold> parameter with the Image_ command. The <cold> parameter instructs the XA-Core system to use the cold restart procedure after the Image test is complete.

Continue

Use the <continue> parameter with the RExTst_ command. Use the <continue> parameter to continue with the REx test until the end (or until it cannot continue). The MAP terminal displays all errors found during the tests. The MAP terminal displays a message to indicate if the REx test cannot complete the process.

Counts

Use the <counts> parameter with the RExTst_ command. The <counts> parameter instructs the XA-Core system to display the number errors found during the last run test. The error counts are listed by category, for example, PE faults, SM faults, IOP faults, and so on.

Device

Use the <device> parameter value with the AbTk_, Bsy_, Cntrs_, RTS_, Tst_, and Uneq_ commands. Device types are as follows:

- TOD. A time of day clock.
- Port. A hardware component.
- Link. The transmission medium between XA-Core and another node.

The <device> parameter must be accompanied by shelf position parameters (<nn> and <s> or <nn>, <s>, and <p>) because different circuit packs and

packlets support different types of devices. Possible values of the parameter are as follows.

- A CMIC packlet has the following devices: TOD0, link0, and link1.
- An RTIF packlet has the following devices: port0 and port1. (Port0 represents the local port and link. Port1 represents the remote port and link. The interface does not separate links and ports for RTIF packlets.)
- An Ethernet packlet has the following devices: port and link. (See also the information about the HIOP and HCMIC circuit packs below.)
- An AMDI packlet has the following devices: link0 and link1. (See also the information about the HIOP circuit pack below.)
- The HIOP circuit pack can have devices.
  - — If the Ethernet section of the circuit pack is supporting an ethernet connection, it has the following ethernet devices: port and link.
  - — If the AMDI section of the circuit pack is supporting AMDI connections, it has the following AMDI devices: link0, link1, port0, and port1.
- The HCMIC circuit pack can have devices.
  - — The RTIF section has the following devices: port0, port1, link0, and link1. (Port0 and link0 are the local port and link; port1 and link1 are the remote port and link.)
  - — The CMIC section has the following devices: port0, port1, link0, link1, TOD0, and TOD1.
  - — If the Ethernet section of the circuit pack is supporting an ethernet connection, it has the following ethernet devices: port and link.

> ***Note:*** There can be a maximum of four ethernet links for an XA-Core shelf. HIOP circuit packs have priority over HCMIC circuit packs for supporting ethernet links. If there are four HIOPs in the shelf, the four HIOPs support the ethernet links. If there are two HIOPs or no HIOPs in the shelf, then each HCMIC can support one ethernet link.

Disable

Use the <disable> parameter with the Alarm_ command. The <disable> parameter disables an active XA-Core maintenance alarm. The <disable> parameter remains active until you enable the alarm or the system performs a restart.

Enable

Use the <enable> parameter with the Alarm_ command. The <enable> parameter activates notification for the XA-Core maintenance alarm from a disable state.

File

Use the file parameter with the LoadFW command to specify a file as the source of the firmware that is to be loaded. The parameter consists of the keyword file followed by one of the following: new, n, current, or c. New or n specifies that the source for the firmware load is to be the file containing the new firmware load for the specified target card or packlet; current or c specifies that the source is to be the file containing the current firmware load for the specified target card or packlet. (The files containing the new and current loads for the cards and packlets are listed in table XAFWLOAD. For information on the table, see the chapter titled "XA-Core data schema overview" in this document.)

Incrname

Use the <incrname> (increment name) parameter value with the Quit command. Enter a MAP level title that is higher in the MAP level hierarchy than the MAP now on display. The current MAP session ends and the system displays the MAP that is one level above that of the incrname.

Lastresult

Use the <lastresult> parameter with the RExTst_ command. Use the <lastresult> parameter to display the results of the last run XA-Core REx test to the MAP.

Nlevels

Use the <nlevels> parameter with the Quit command. End the current MAP session and display a MAP level that is higher in the MAP system hierarchy. Enter a number value that represents the number of DMS MAP levels to step-back in the MAP system hierarchy.

nn

Use the <nn> (slot number) parameter value with the <s> (side) and <p> (position) parameters. Use the <nn> parameter to indicate the number of the physical shelf slot.

p

Use the <p> (position) parameter value with the <nn> (slot number) and <s> (side) parameters. Use the <p> parameter to indicate the physical upper (U) or lower (L) position of the packlet in an IOP CP.

Query

Use the <query> parameter with the Cntrs_ command. The parameter instructs the system to display the following information.

- Either the value of all system-busy (SysB) transition counters that are greater than zero, or the message: `No SysB transitions on any components in the last 42-48 hrs.` A SysB transition counter counts the number of times that a component goes from the in-service state

to the SysB state. There are separate SysB counters for each instance of each item in each of four component groups. (The next paragraph lists the members of each component group.) For each individual component, the system counts the SysB transitions that occur during the current six-hour interval. It also maintains a record of the totals from the seven preceding six-hour intervals. It sums the totals from the seven preceding intervals and the current interval, to obtain the total number of SysB transitions occurring during a 42-to-48-hour period.

The component groups are as follows.

— The PE group includes PE circuit packs.

— The SM group includes SM circuit packs.

— The IO link (IOlk) group includes all IO links.

— The IO hardware (IOhw) group includes IOP, HIOP, and HCMIC circuit packs, all packlets, sections of HIOP circuit packs that are supporting ETHR and AMDI connections, sections of HCMIC circuit packs that are supporting RTIF, CMIC, and ETHR connections, time-of-day (TOD) devices, and ports.

- The values of the minor and major thresholds for each component group. (Component groups are described below.) The thresholds are displayed in an output line that resembles the following:

  SysBTh thresholds: (Min/Maj): PE=2/6; SM=2/4; IOhw=2/6; IOlk=2/8

  Note: The threshold values shown in the example are for illustrative purposes only. If the values shown in the example differ from the output of the CNTRS QUERY command, you should regard the command output as correct.

  For each component group, a slash separates the minor and major threshold values. For example, “SM=2/4” means that the minor threshold for the SM group is 2, and the major threshold is 4.

  The minor and major thresholds are for a 42-to-48-hour period. If a component’s total number of SysB transitions for the 42-to-48-hour period equals or exceeds the minor threshold for that group, and if a SysBTh minor or major alarm is not already in effect, the system raises a SysBTh minor alarm (unless the alarm has been disabled). If a component’s total number of SysB transitions for the 42-to-48-hour period equals or exceeds the major threshold for that group, and if a SysBTh major alarm is not already in effect, the system raises a SysBTh major alarm (unless the alarm has been disabled). For information on the SysBTh minor and major

alarms and for information on disabling alarms, see the *XA-Core Maintenance Manual*, 297-8991-510.

> ***Note:*** If the alarms have been disabled, you can use the "ALARM RAISED" MAP command to check whether the alarms have been triggered.

Raised

Use the <raised> parameter with the Alarm_ command. The <raised> parameter instructs the XA-Core system MAP to display active alarms. The MAP terminal displays the alarm severity and enabled/disabled status. Use the <raised> parameter with the [enabled] or [disabled] options. If you do not enter any options, the XA-Core system MAP displays all active, enabled and disabled alarms.

Reload

Use the <reload> parameter with the Image_ command. The parameter instructs the XA-Core system to test the image reload capability.

Reset

Use the <reset> parameter with the Cntrs_ command. The parameter instructs the system to reset to zero the value of the system-busy (SysB) transition counters for a specific component.

The SysB transition counters count the number of times a component goes from the in-service state to the SysB state. For each monitored component, the system maintains a transition counter for the current six-hour interval and also maintains a record of the counter values for the seven preceding six-hour intervals. For each monitored component, the system sums the totals from the seven preceding intervals and the current interval, to obtain the total number of SysB transitions occurring during a 42-to-48-hour period.

The system counts the SysB transitions for each instance of each item in each of the following component groups:

- The PE group includes PE circuit packs.
- The SM group includes SM circuit packs.
- The IO link (IOlk) group includes all IO links.
- The IO hardware (IOhw) group includes IOP, HIOP, and HCMIC circuit packs, all packlets, sections of HIOP circuit packs that are supporting ETHR and AMDI connections, sections of HCMIC circuit packs that are supporting RTIF, CMIC, and ETHR connections, time-of-day (TOD) devices, and ports.

Use the <reset> parameter with the <nn> and <s> shelf location parameters for a circuit pack or with the <nn>, <s>, and <p> shelf location parameters for a

packlet. With the <reset> parameter, use the <device> parameter to identify a port or a link, or a time-of-day device.

Note 1: Ordinarily, you should use the <reset> parameter only for links. Use it after you have corrected a link fault, to reset the SysB transition counters for the link.

Note 2: Ordinarily, for all components other than links, you should let the system reset the counters automatically. The system resets a component's counters automatically when you replace the component. Alternatively, if the SysB transitions stop occurring, the counters will revert to zero after seven six-hour intervals. At the beginning of each six-hour interval, the system starts new six-hour transition counters at zero for all monitored components, and it discards the oldest interval data. If a component goes through seven consecutive six-hour intervals without a SysB transition, all the counters for that component revert to zero.

Resetcounts

Use the <resetcounts> parameter with the RExTst_ command to clear the RExerror counter registers.

RExClass

Use the <rex_class> parameter value with the RExTst_ command to indicate the type of RExtest. The following are <rex_class> parameter values:

- All: The system performs a RExtest (both InSv and OOS tests) on all subsystems (PE, SM and IO).
- PE: The XA-Core system first performs InSv tests, then OOS tests on PE CPs.
- SM: The XA-Core system first performs InSv tests, then OOS tests on SM CPs.
- IO: The XA-Core system first performs InSv tests, then OOS tests on IOP CPs, HIOP CPs, HCMIC CPs, packlets, and devices.
- Base: The XA-Core performs a limited set of non-destructive, InSv RExtests on all CPs and packlets. The XA-Core system also performs an Image test.
- Full: The XA-Core performs a RExand Image test on all InSv CPs. The XA-Core system performs a limited set of non-destructive tests (ALL + Image Test).

Run

Use the <run> parameter with a <rex_class> parameter in the RExTst__ command. The XA-Core system performs a RExtest using the indicated RExclass.

s

Use the <s> (side) parameter value with the <nn> (slot number) and <p> (position) parameters. Use the <s> parameter to indicate the physical side front (F) or rear (R).

Setday

Use the <setday> parameter with the RExInt_ command. The <setday> parameter allows you to schedule the days to perform a full XA-Core REx test.

Shelf

Use the <shelf> parameter with the Query_ command. The <shelf> parameter retrieves all the information you would obtain by entering the Query card command for every circuit pack and packlet in the XA-Core.

Status

Use the <status> parameter with the RExInt_ command. The <status> parameter instructs the MAP to display the current status of XA-Core REx test intensity. The MAP displays the daily schedule for full and base REx tests.

Test

Use the <test> parameter with the Indicat_ command. The <test> parameter causes all LEDs to illuminate on a single CP or packlet.

Testall

Use the <testall> parameter with the Indicat_ command. The <testall> parameter causes all LEDs to light on all CPs and packlets.

Terminate

Use the <terminate> parameter with the RExTst_ command. The <terminate> parameter instructs the XA-Core system to discontinue a REx test.

Thresholds

Use the <thresholds> parameter with the RExTst_ command. The <thresholds> parameter instructs the XA-Core system to display the limit values for the error categories.

- PE faults
- SM faults
- IOP faults
- HIOP faults
- HCMIC faults
- Tape faults
- Disk faults
- RTIF packlet faults

- CMIC packlet faults
- AMDI packlet faults
- ETHR packlet faults
- RTIF local port faults
- RTIF remote port faults
- RTIF local link faults
- RTIF remote link faults
- AMDI port faults
- AMDI link faults
- CMIC port faults
- CMIC link faults
- ETHR port faults
- ETHR link faults
- TOD faults

Type

Use the <type> parameter with the Query_ command. The <type> value (SM, PE, IO) causes the MAP to display a * symbol under the correct slot number. If the <type> parameter value is left blank, the MAP shows the location of all CPs that match the MAP level on display.

Warm

Use the <warm> parameter with the Image_ command. The <warm> parameter instructs system management software is to use the warm restart procedure. The warm restart occurs after the Image test is complete.

Command options

Command options are non-mandatory. Options refine the action or actions taken by the XA-Core system in response to a command. Use the command option with the command name (or menu number) and command parameter. Table 4-9 on page 4-26 provides a summary reference for commands that use options.

Continue

Use the [continue] option with the RExInt_ command. Use the [continue] option to continue with the RExInt test until the end (or until it cannot continue).

Disabled

Use the [disabled] option with the Alarm_command and <raised> parameter to display all active, disabled alarms.

Enabled

Use the [enabled] option with the Alarm_command and <raised> parameter to display all active, enabled alarms.

Force

Use the [force] option to execute a command. Ignore possible error or loss of redundancy conditions.

Nomatch

Use the [nomatch] option to prevent the system from performing a memory match test.

Noprompt

Use the [noprompt] option to block the display of error messages. Use the <disable> parameter, if the system permits, with the [noprompt] option.

Nowait

Use the [nowait] option to execute a command. Display the MAP prompt to allow you to continue with other work while the system is performing a task.

Timer

Use the [timer] option with the Indicat_ command. The [timer] option instructs the XA-Core system to light/wink for a period of time. You can enter the [timer] value as minutes (no limit). When the time expires, the LEDs turn off. The default time limit is 120 minutes.

Command parameter and option use

Table 4-9 provides a summary reference for all commands and matching parameters and options.

Table 4-9 MAP command parameter summary (Sheet 1 of 8)

Command	Parameter description	Option description
Alarm_	All MAP levels: • <All> • <Disable> • <Enable> • <Raised>	All MAP levels: • [Enabled] • [Disabled]

Table 4-9 MAP command parameter summary (Sheet 2 of 8)

Command	Parameter description	Option description
Bsy_	• <nn> <s> for SM, PE, IO MAP levels • <nn> <s> <p> for Disk, Tape, CMIC, RTIF, ETHR, and AMDI MAP levels • <nn> <s> <p> <device>- CMIC, RTIF, ETHR, and AMDI MAP levels ***Note 1:*** The <p> (position) parameter is used only when busying a packlet or a packlet's device. In the ETHR, AMDI, CMIC, and RTIF MAP levels, the <p> parameter is not used if the Ethernet connection, AMDI connection, CMIC connection, or RTIF connection is supported by an HIOP or HCMIC circuit pack rather than by a packlet. ***Note 2:*** Possible values of the <device> parameter are as follows. In the CMIC MAP level, the <device> parameter cannot be used if the CMIC connections are on CMIC packlets. The <device> parameter can be port0 or port1 if the CMIC connections are on HCMIC circuit packs. In the RTIF MAP level, the <device> parameter can be port0 or port1 if the RTIF connections are on RTIF packlets. (Port0 is local; port1 is remote.) The <device> parameter can be port0, port1, link0 or link1 if the RTIF connections are on HCMIC CPs. (Port0 and link0 are local; port1 and link1 are remote.) In the ETHR MAP level, the <device> parameter can be port or link, regardless of whether the ethernet connection is on an ethernet packlet or on an HIOP or HCMIC CP. In the AMDI MAP level, the <device> parameter can be link0 or link 1 if the AMDI connections are on an AMDI packlet, and can be port0, port1, link0, or link1 if the AMDI connections are on an HIOP CP.	PE, SM, IO, CMIC, RTIF, Disk, Tape, AMDI, and ETHR MAP levels: • [Force] • [Noprompt]
Card_	XAC MAP level: • <nn> <s> for SM, PE, IO • <nn> <s> <p> for packlets	

Table 4-9 MAP command parameter summary (Sheet 3 of 8)

Command	Parameter description	Option description
Cntrs_	XAC, SM, PE, IO, CMIC, Disk, Tape, AMDI, ETHR, and RTIF MAP levels: • <Query> • <Reset> <nn> <s> <p> <device> ***Note 1:*** Ordinarily, you should use the <Reset> parameter only for links. Use it after you have corrected a link fault, to reset the SysB transition counters for the link. Ordinarily, you should let the system reset all other counters automatically. ***Note 2:*** You can reset the counters for devices only if you are at the appropriate MAP level. For example, you can reset the counters for CMIC links only if you are at the CMIC MAP level. ***Note 3:*** The <p> (position) parameter is used only when querying or resetting the counter for a packlet or or for a packlet's device. In the ETHR, AMDI, and RTIF MAP levels, the <p> parameter is not used if the ethernet connection, AMDI connection, or RTIF connection is supported by an HIOP or HCMIC circuit pack rather than by a packlet. ***Note 4:*** Possible values of the <device> parameter are as follows. In the CMIC MAP level, the <device> parameter can be link0, link1, or TOD0 if the CMIC connections are on CMIC packlets. The <device> parameter can be port0, port1, link0, link1, TOD0, or TOD1 if the CMIC connections are on HCMIC circuit packs. In the RTIF MAP level, the <device> parameter can be port0 or port1 if the RTIF connections are on RTIF packlets. (Port0 is local; port1 is remote.) The <device> parameter can be port0, port1, link0 or link1 if the RTIF connections are on HCMIC CPs. (Port0 and link0 are local; port1 and link1 are remote.) In the ETHR MAP level, the <device> parameter can be port or link, regardless of whether the ethernet connection is on an ethernet packlet or on an HIOP or HCMIC CP. In the AMDI MAP level, the <device> parameter can be link0 or link 1 if the AMDI connections are on an AMDI packlet, and can be port0, port1, link0, or link1 if the AMDI connections are on an HIOP CP.	

Table 4-9 MAP command parameter summary (Sheet 4 of 8)

Command	Parameter description	Option description
Format_	<nn> <s> <p> for Disk MAP level	Disk MAP level: • [Force] • [Nowait]
Image_	XACMtc MAP level: • <Change> (Warm, Cold, Reload) • <Test> (Warm, Cold, Reload) • <Query>	Options used at the XACMtc MAP level, with the <Change> parameter only: • [Noprompt] • [Nowait]
Indicat_	All MAP levels: • <Card> • <Clear> • <Clearall> • <nn> <s> <p> • <Test> • <Testall>	[Timer] - all MAP levels
LoadFw_	PE, IO, CMIC, AMDI, and ETHR MAP levels: • <nn> <s> for PE and IO MAP levels • <nn> <s> <p> for CMIC, AMDI, and ETHR MAP levels • FILE <file> (New, N, Current, C) for PE, IO, CMIC, AMDI, and ETHR MAP levels	[Nowait]
Query_	All MAP levels: • <Card> • <Shelf> • <nn> <s> for SM,PE, and IO MAP levels • <nn> <s> <p> for packlets • <Type> for SM, PE, and IO MAP levels	
Quit	All MAP levels: • <All> • <Incrname> • <Nlevel>	

Table 4-9 MAP command parameter summary (Sheet 5 of 8)

Command	Parameter description	Option description
RExInt_	XACMtc MAP level: • <Clearday> • <Rex_Class> • <Rex_Day> • <Setday> • <Status>	XACMtc MAP level: • [Continue] • [Noprompt]
RExTst_	XACMtc MAP level: • <Continue> • <Counts> • <Lastresult> • <Resetcounts> • <Rex_Class> • <Run> • <Terminate> • <Thresholds>	XACMtc MAP level: • [Noprompt] • [Nowait]
Route_	CMIC MAP level: • <nn> <s> <p> if CMIC links are supported by an OC-3 two-port interface packlet • <nn> <s> if CMIC links are supported by an HCMIC circuit pack	

Table 4-9 MAP command parameter summary (Sheet 6 of 8)

Command	Parameter description	Option description
RTS_	• <nn> <s> for SM, PE, IO equipment • <nn> <s> <p> for all packlets • <nn> <s> <p> <device>- for the CMIC, RTIF, ETHR, and AMDI MAP levels ***Note 1:*** The <p> (position) parameter is used only when returning to service a packlet or a packlet's device. In the ETHR, AMDI, CMIC, and RTIF MAP levels, the <p> parameter is not used if the Ethernet connection, AMDI connection, CMIC connection, or RTIF connection is supported by an HIOP or HCMIC circuit pack rather than by a packlet. ***Note 2:*** Possible values of the <device> parameter are as follows. In the CMIC MAP level, the <device> parameter cannot be used if the CMIC connections are on CMIC packlets. The <device> parameter can be port0 or port1 if the CMIC connections are on HCMIC circuit packs. In the RTIF MAP level, the <device> parameter can be port0 or port1 if the RTIF connections are on RTIF packlets. (Port0 is local; port1 is remote.) The <device> parameter can be port0, port1, link0 or link1 if the RTIF connections are on HCMIC CPs. (Port0 and link0 are local; port1 and link1 are remote.) In the ETHR MAP level, the <device> parameter can be port or link, regardless of whether the ethernet connection is on an ethernet packlet or on an HIOP or HCMIC CP. In the AMDI MAP level, the <device> parameter can be link0 or link 1 if the AMDI connections are on an AMDI packlet, and can be port0, port1, link0, or link1 if the AMDI connections are on an HIOP CP.	IO, PE, SM, Disk, Tape, CMIC, AMDI, ETHR, and RTIF MAP levels: • [Nowait]
Trnsl_	• <nn> <s> SM MAP level • <address>, <address_value>, <card>, <nn> <s> PE MAP level • <nn> <s> <p> CMIC MAP level, to Trnsl a CMIC packlet • <nn> <s> CMIC MAP level, to Trnsl the CMIC section of an HCMIC circuit pack	

Table 4-9 MAP command parameter summary (Sheet 7 of 8)

Command	Parameter description	Option description
Tst_	• <nn> <s> SM, PE and IO MAP levels • <nn> <s> <p> CMIC, RTIF, ETHR, AMDI, Disk, and Tape MAP levels • <nn> <s> <p> <device>- RTIF, CMIC, ETHR, and AMDI MAP levels ***Note 1:*** The <p> (position) parameter is used only when testing a packlet or a packlet's device. In the ETHR, AMDI, CMIC, and RTIF MAP levels, the <p> parameter is not used if the Ethernet connection, AMDI connection, CMIC connection, or RTIF connection is supported by an HIOP or HCMIC circuit pack rather than by a packlet. ***Note 2:*** Possible values of the <device> parameter are as follows. In the CMIC MAP level, the <device> parameter can be link0, link1, or TOD0 if the CMIC connections are on CMIC packlets. The <device> parameter can be port0, port1, link0, link1, TOD0, or TOD1 if the CMIC connections are on HCMIC circuit packs. In the RTIF MAP level, the <device> parameter can be port0 or port1 if the RTIF connections are on RTIF packlets. (Port0 is local; port1 is remote.) The <device> parameter can be port0, port1, link0 or link1 if the RTIF connections are on HCMIC CPs. (Port0 and link0 are local; port1 and link1 are remote.) In the ETHR MAP level, the <device> parameter can be port or link, regardless of whether the ethernet connection is on an ethernet packlet or on an HIOP or HCMIC CP. In the AMDI MAP level, the <device> parameter can be link0 or link 1 if the AMDI connections are on an AMDI packlet, and can be port0, port1, link0, or link1 if the AMDI connections are on an HIOP CP.	SM, PE, IO, CMIC, RTIF, Disk, Tape, AMDI, and ETHR MAP levels: • [Nowait]

Table 4-9 MAP command parameter summary (Sheet 8 of 8)

Command	Parameter description	Option description
Uneq_	• <nn> <s> SM, PE and IO MAP levels, indicating a circuit pack • <nn> <s> <p> CMIC RTIF, Disk, and Tape MAP levels, indicating a packlet • <nn> <s> <p> <device> AMDI and ETHR MAP levels, indicating — a link (link) on an ethernet packlet — a link (link0, link1) on an AMDI packlet • <nn> <s> <device> AMDI, ETHR, CMIC, and RTIF MAP levels indicating — a link (link) on the ethernet section of an HIOP or HCMIC circuit pack — a link (link0, link1) on the AMDI section of an HIOP circuit pack — a link (link0, link1) on the CMIC section of an HCMIC circuit pack — a link (link0, link1) on the RTIF section of an HCMIC circuit pack	

Error messages

Error messages, in general, indicate errors in command tasks, storage devices, or XA-Core system software. An error message response indicates that no action has occurred. Determine the best course of action based on the message statement.

The following are examples of XA-Core error messages:

```
‘No action taken.'

'No action taken because of Bsy impact.'

'File system resource unavailable, no action taken.'

'Fault encountered.'

'File system software error, no action taken.'

'Invalid request, no action taken.'

'Improper state for required action, no action
taken.'

'Message corruption encountered, no action taken.'

'Maintenance action underway, no action taken.'

'No data available.'

'Command could not be aborted.'

'Operation aborted.'

'Command could not be completed.'

'Device number invalid, no action taken.'

'Message corruption encountered, no action taken.'

'Software fault, no action taken.'

'Unknown reason, no action taken.'

'Command cannot be executed from this MAP level ...
no action taken.''
```

Device error messages

A Device error message indicates that an error has occurred in a mass storage device.

The following are examples of Device error messages:

```
'Formatting stage failed.'

'Data checking stage failed.'

'Diskadm command running.'

'Data flush stage failed.'

'Initialization of disk data failed.'

'Disk label invalid.'

'Unexpected device type encountered, no action
taken.'

'State change failed due to corrupted data.'

'Volume directory invalid, no action taken.'

'Volume exists on disk, no action taken.'

'File System initialization failed.'

'Starting Mass Storage Access software failed.'

'Mass Storage Access software initialization
failed.'
```

Warning messages

A Warning message response indicates that the command can affect equipment or switch operation. The following is an example of a Warning message:

```
'Warning: Format of the disk will result in LOST
DATA. Proceed?'
```

Response messages

A Response message indicates the XA-Core system a response to a task. The following are example response messages.

```
'passed'

'aborted'

'Bad message return code'

'failed'

'Time out'

'Wrong reply message sent back'spaces[] -> state[]'

'Invalid XA-Core Slot Number/Card Side.'

'Command Rejected.'

'Unknown option specified.'

'Command Submitted.'
```

XAC MAP level

Introduction

Use the XA-Core (XAC) MAP level to display maintenance data on the MAP terminal and perform general maintenance activities. Use the XAC MAP to select other XA-Core MAP levels. Select the XAC menu option from the DMS MTC MAP level to display the XA-Core XAC MAP level.

XAC MAP level

The XAC MAP level is an interface that allows you to monitor the XA-Core system. The XAC MAP level allows you to access other XA-Core MAP levels.

XAC MAP level

```
 XAC      MS      IOD      Net      PM      CCS      Lns     Trks     Ext     APPL
  .       .        .        .       .        .        .        .       .        .

XAC                 Front:   111111111  Rear: 111111   SM     PE      IO     PKLT
 0 Quit             123456789012345678  456789012345   .      .       .      .
 2 Card_       Sta: -.-----..-.---.-..-  .--.--------.  0      0       0      0
 3 XACMtc      Dep:
 4 SM
 5 PE
 6 IO
 7 CMIC
 8 RTIF
 9 Disk
10 Tape
11 AMDI
12 ETHR
13
14 Alarm_
15 Cntrs_
16
17 Indicat_
18 Query_
 XMAP0
Time  14:12   >
```

XAC MAP menu commands

Menu commands appear on the MAP command menu. Non-menu commands do not appear on the MAP menu list. Enter both menu and non-menu commands in the command interpreter input area. You can enter either the command name or the menu number that matches the command.

XAC MAP level (continued)

Table "Summary of XAC MAP level commands" is a summary description of valid XAC MAP level commands.

Summary of XAC MAP level commands

Command	Menu #	Type	Function
Alarm_	14	Op/Info	Enable, disable or query alarm notifications
AMDI	11	Nav	Display the AMDI MAP level
Card_	2	Nav	Display a CP or packlet MAP level
CMIC	7	Nav	Display the CMIC MAP level
Cntrs_	15	Info	Display the non-zero system-busy (SysB) transition counters, or reset the SysB transition counters for a specified component
Disk	9	Nav	Display the Disk MAP level
ETHR	12	Nav	Display the ETHR MAP level.
Indicat_	17	Info	Cause a CP or packlet LED to wink or clear
IO	6	Nav	Display the IO MAP level
PE	5	Nav	Display the PE MAP level
Query_	18	Info	List information for any CP
Quit	0	Nav	Exit from the MAP level now on display
RTIF	8	Nav	Display the RTIF MAP level
SM	4	Nav	Display the SM MAP level
Tape	10	Nav	Display the Tape MAP level
XACMtc	3	Nav	Display the XACMtc MAP level

Alarm_

The Alarm_ command is a common menu command. The Alarm_ command allows you to perform the following tasks:

- permit notification for selected alarms
- disable notification for selected alarms
- query the XA-Core system to identify alarm conditions or examine the status of alarms

Menu selection number

14

Type

Operational or Informational

Parameters

The Alarm_ command requires command parameters. If you do not enter any parameters or you enter invalid parameters, the MAP terminal prompts you to enter a correct parameter value. The Alarm_ command requires at least one of the following command parameters.

Alarm_name

Use the <alarm_name> parameter to indicate the name of the XA-Core system alarm. You can use the <alarm_name> parameter with the <disable> and <enable> parameters.

All

Use the <all> parameter to enable or disable notification for all alarms (use with the <enable> or <disable> parameter.

Disable

Use the <disable> parameter to prevent the XA-Core system from displaying alarm notification messages on the MAP screen. You can disable either one alarm at a time or all alarms. Use the <disable> parameter with the Alarm_ command and <alarm_name> parameter to disable a single alarm. Use the <disable> parameter with the <all> parameter to disable all XA-Core alarms. The <disable> parameter remains active until you enable the alarm or the system performs a restart.

Enable

Use the <enable> parameter to instruct the XA-Core system to display an alarm notification message on the MAP terminal. You can enable either one alarm or all alarms. Use the <enable> parameter together with the Alarm_

XAC MAP level (continued)

command and <alarm_name> parameter to enable a single alarm. Use the <enable> parameter with the <all> parameter to enable all XA-Core alarms.

Raised

Use the <raised> parameter to display all active alarms, the alarm severity and enabled/disabled status. You can use the <raised> parameter with the [enabled] or [disabled] options. If you do not enter any options, the XA-Core system MAP displays all active, enabled and disabled alarms.

Options

You can enter one of the following command options in the command statement.

Disabled

Use the [disabled] option with the <raised> parameter. The option instructs the XA-Core system to display all active alarms that have a disabled status.

Enabled

Use the [enabled] option with the <raised> parameter. The option instructs the XA-Core system to display all active alarms that have an enabled status.

Command format examples

Example use of the Alarm_ command is shown in Table "Alarm_ command examples". The Alarm_ command syntax is shown in the example below.

COMMAND <parameter> [option]

Alarm_ command examples (Sheet 1 of 2)

Command example	Command description
>ALARM tape	ALARM <alarm_name>: Display the alarm severity and status for a single alarm.
>ALARM all	ALARM <all>: Display the alarm severity and status for all alarms.
>ALARM all disable	ALARM <all> <disable>: Disable notification for all alarms.
>ALARM tape disable	ALARM <alarm_name> <disable>: Disable notification for a single alarm.

Alarm_ command examples (Sheet 2 of 2)

Command example	Command description
>ALARM all enable	ALARM <all> <enable>: Enable notification for all alarms.
>ALARM tape enable	ALARM <alarm_name> <enable>: Enable notification for a single alarm.
>ALARM raised	ALARM <raised>: Display all active alarms
>ALARM raised enabled	ALARM <raised> [enabled]: Display active alarms that have an enabled status
>ALARM raised disabled	ALARM <raised> [disabled]: Display active alarms that have an disabled status

AMDI

The AMDI command instructs the XA-Core system to display the AMDI MAP level.

Menu selection number

11

Type

Navigational

Parameters

There are no command parameters.

Options

There are no command options.

Command format examples

Example use of the AMDI command is shown in Table "AMDI command examples". The AMDI command syntax is shown in the example below.

XAC MAP level (continued)

COMMAND

AMDI command examples

Command example	Command description
>AMDI	Exit from the current MAP session and display the AMDI MAP level.

Card_

Use the Card_ command to display the MAP level that matches the shelf location of a CP or packlet.

Menu selection number

2

Type

Navigational

Parameters

The Card_ command requires command parameters. Enter command parameters in the command statement to identify the physical shelf location of a CP or packlet. If you do not enter any parameters or you enter invalid parameters, the MAP terminal displays an error message. The MAP terminal prompts you to enter a correct parameter value.

The Card_ command requires two or more of the following command parameters.

nn

Use the <nn> (slot number) parameter value to indicate the number of the physical shelf slot - 1 to 18.

s

Use the <s> (side) parameter value to indicate the CP or packlet location in the physical shelf - front (f) or rear (r).

p

Use the <p> (position) parameter value to indicate the packlet location in an input/output processor (IOP) - upper (u) or lower (l).

Options

There are no command options.

Command format examples

Example use of the Card_ command is shown in Table "Card_ command examples". The Card_ command syntax is shown in the example below.

COMMAND <parameter>

Card_ command examples

Command example	Command description
>CARD 2 f	CARD <nn> <s>: Display the MAP level that matches the CP physical shelf location.
>CARD 4 r u	CARD <nn> <s> <p>: Display the MAP level that matches the packlet physical shelf location.

CMIC

The CMIC command instructs the XA-Core system to display the CMIC MAP level.

Menu selection number

7

Type

Navigational

Parameters

There are no command parameters.

Options

There are no command options.

Command format examples

Example use of the CMIC command is shown in Table "CMIC command examples". The CMIC command syntax is shown in the example below.

XAC MAP level (continued)

COMMAND

CMIC command examples

Command example	Command description
>CMIC	Exit from the current MAP session and display the CMIC MAP level.

Cntrs_

The Cntrs_ command instructs the XA-Core system to either display the current values of all non-zero system-busy (SysB) transition counters, or to reset to zero the SysB transition counters for a specified component. A SysB transition counter counts the number of times that a component's state changes from in-service to system-busy.

The system maintains separate SysB transition counters for each instance of each of the following components:

- IOP, HIOP, and HCMIC circuit packs
- all packlets: disk, tape, CMIC, RTIF, Ethernet, and AMDI
- sections of HIOP circuit packs that are supporting ETHR and AMDI connections
- sections of HCMIC circuit packs that are supporting CMIC, RTIF, and ETHR connections
- time-of-day (TOD) devices
- ports

For each component, the system counts the SysB transitions that occur during the current six-hour interval. It also remembers the totals from the seven preceding six-hour intervals. It sums the totals from the seven preceding intervals and the current interval, to obtain the total number of SysB transitions occurring during a 42-to-48-hour period.

The monitored components are divided into groups and for each group there are minor and major threshold values. The minor and major thresholds are for a 42-to-48-hour period. If a component's total number of SysB transitions for the 42-to-48-hour period equals or exceeds the minor threshold for its component group, and if a SysBTh minor or major alarm is not already in effect, the system raises a SysBTh minor alarm (unless the alarm has been disabled). If a component's total number of SysB transitions for the 42-to-48-hour period equals or exceeds the major threshold for its component group, and if a SysBTh major alarm is not already in effect, the system raises

a SysBTh major alarm (unless the alarm has been disabled). For information on the component groups, see the description of the "Query" parameter, below. For information on the SysBTh minor and major alarms and for information on disabling alarms, see the *XA-Core Maintenance Manual*, 297-8991-510.

Menu selection number

15

Type

Informational

Parameters

The Cntrs_ command requires either the <query> parameter or the <reset> parameter.

If you use the <query> parameter, no other parameters are permitted.

If you use the <reset> parameter, you must use additional parameters to specify a component: The <nn> and <s> parameters are required in all CNTRS RESET commands. The <p> parameter is required in some CNTRS RESET commands. The <device> parameter is required in some CNTRS RESET commands.

Query

The <query> parameter instructs the XA-Core system to display the following information.

- Either the value of all system-busy (SysB) transition counters that are greater than zero, or the message: `No SysB transitions on any components in the last 42-48 hrs.` A SysB transition counter counts the number of times that a component goes from the in-service state to the SysB state. For a list of the components for which the system maintains SysB transition counters, see the beginning of this "Cntrs_" section. The system maintains a separate SysB transition counter for each instance of each listed component, for example, for each TOD device. For each component, the system counts the SysB transitions that occur during the current six-hour interval. It also maintains a record of the totals from the seven preceding six-hour intervals. It sums the totals from the seven preceding intervals and the current interval, to obtain the total number of SysB transitions occurring during a 42-to-48-hour period.
- The values of the minor and major thresholds for each component group. (Component groups are described below.) The thresholds are shown in an output line that resembles the following:

XAC MAP level (continued)

SysBTh thresholds: (Min/Maj): PE=2/6; SM=2/4; IOhw=2/6; IOlk=2/8

> ***Note:*** The threshold values shown in the example are for illustrative purposes only. If the values shown in the example differ from the output of the CNTRS QUERY command, you should regard the command output as correct.

For each component group, a slash separates the minor and major threshold values. For example, “SM=2/4” means that the minor threshold for the SM group is 2, and the major threshold is 4.

The minor and major thresholds are for a 42-to-48-hour period. If a component’s total number of SysB transitions for the 42-to-48-hour period equals or exceeds the minor threshold for that group, and if a SysBTh minor or major alarm is not already in effect, the system raises a SysBTh minor alarm (unless the alarm has been disabled). If a component’s total number of SysB transitions for the 42-to-48-hour period equals or exceeds the major threshold for that group, and if a SysBTh major alarm is not already in effect, the system raises a SysBTh major alarm (unless the alarm has been disabled). For information on the SysBTh minor and major alarms and for information on disabling alarms, see the *XA-Core Maintenance Manual*, 297-8991-510.

The component groups are as follows.

— The PE group includes PE circuit packs.

— The SM group includes SM circuit packs.

— The IO link (IOlk) group includes all IO links.

— The IO hardware (IOhw) group includes IOP, HIOP, and HCMIC circuit packs, all packlets, sections of HIOP circuit packs that are supporting ETHR and AMDI connections, sections of HCMIC circuit packs that are supporting RTIF, ETHR, and CMIC connections, time-of-day (TOD) devices, and ports.

Reset

The <reset> parameter instructs the system to reset to zero the value of the system-busy (SysB) transition counters for a specific component. The parameters following the <reset> parameter specify the component.

Use the <reset> parameter with the <nn> and <s> shelf location parameters for a circuit pack or with the <nn>, <s>, and <p> shelf location parameters for a

packlet. With the <reset> parameter, use the <device> parameter to identify a port or a link or a time-of-day device (TOD).

Note 1: Ordinarily, you should use the <reset> parameter only for links. Use it after you have corrected a link fault, to reset the SysB transition counters for the link.

Note 2: Ordinarily, for all components other than links, you should let the system reset the counters automatically. The system resets a component's counters automatically when you replace the component. Alternatively, if the SysB transitions stop occurring, the counters will revert to zero after seven six-hour intervals. At the beginning of each six-hour interval, the system starts a six-hour transition counter at zero and it adjusts the 42-to-48-hour total to reflect the seven preceding six-hour intervals. If the component goes through seven consecutive six-hour intervals without a SysB transition, all the counters revert to zero.

nn

Use the <nn> (slot number) parameter value to indicate the number of the physical shelf slot where a CP or packlet is located - 1 to 18. The component could be the CP or packlet, or it could be a device on the CP or packlet. The <nn> parameter is required in all cases.

s

Use the <s> (side) parameter value to indicate the location in the physical shelf of a CP or packlet - front (f) or rear (r). The component could be the CP or packlet, or it could be a device on the CP or packlet. The <s> parameter is required in all cases.

p

Use the <p> (position) parameter value to indicate the packlet location in an input/output processor (IOP) - upper (u) or lower (l). The <p> parameter is required if the component is a packlet or a device on a packlet.

Device

Use the <device> parameter if the component is a link, a port, or a TOD device.

Options

There are no command options.

Command format examples

Example use of the Cntrs_ command is shown in Table "Cntrs_ command examples". The Cntrs_ command syntax is shown in the example below.

XAC MAP level (continued)

COMMAND <parameter>

Cntrs_ command examples

Command example	Command description
>Cntrs query	CNTRS QUERY: Display the values of all non-zero SysB transition counters, and display the minor and major threshold values.
>Cntrs reset 14 r	CNTRS RESET <nn> <s>: Reset the SysB transition counter for the circuit pack in slot 14R (an IOP or HIOP circuit pack).
>Cntrs reset 15 r u	CNTRS RESET <nn> <s> <p>: Reset the SysB transition counter for the packlet in slot 15R, upper (a CMIC packlet).
>Cntrs reset 6 r u link	CNTRS RESET <nn> <s> <p> <device>: Reset the SysB transition counter for the link on the ethernet packlet in slot 6R, upper.
>Cntrs reset 4 r l port0	CNTRS RESET <nn> <s> <p> <device>: Reset the SysB transition counter for port0 (the local port) on the RTIF packlet in slot 4R, lower.
>Cntrs reset 13 r l link0	CNTRS RESET <nn> <s> <p> <device>: Reset the SysB transition counter for link0 on the AMDI packlet in slot 13R, lower.
>Cntrs reset 14 r link1	CNTRS RESET <nn> <s> <device>: Reset the SysB transition counter for link1 on the AMDI section of the HIOP circuit pack in slot 14R.
>Cntrs reset 15 r tod0	CNTRS RESET <nn> <s> <device>: Reset the SysB transition counter for the tod0 time-of-day device on the CMIC section of the HCMIC circuit pack in slot 15R.

Disk

The Disk command instructs the XA-Core system to display the Disk MAP level.

Menu selection number

9

XAC MAP level (continued)

Type

Navigational

Parameters

There are no command parameters.

Options

There are no command options.

Command format examples

Example use of the Disk command is shown in Table "Disk command examples". The Disk command syntax is shown in the example below.

COMMAND

Disk command examples

Command example	Command description
>DISK	Exit from current MAP session and display the Disk MAP level.

ETHR

The ETHR command instructs the XA-Core system to display the ETHR MAP level.

Menu selection number

12

Type

Navigational

Parameters

There are no command parameters.

Options

There are no command options.

Command format examples

Example use of the ETHR command is shown in Table "ETHR command examples". The ETHR command syntax is shown in the example below.

XAC MAP level (continued)

COMMAND

ETHR command examples

Command example	Command description
>ETHR	Exit from the current MAP session and display the ETHR MAP level.

Indicat_

The Indicat_ command is a common command. The command causes LEDs on CPs or packlets to wink or illuminate. The command allows you to locate a device on the physical shelf or to make sure all LEDs work. CPs and packlets must be in a ManB state before you use the Indicat_ card command.

> ***Note:*** If you use the Indicat_ command with the <test> or <testall> parameters, CPs and packlets do not have to be in a ManB state.

Menu selection number

17

Type

Informational

Parameters

The Indicat_ command requires parameters. If you do not enter any parameters or you enter invalid parameters, the MAP terminal displays an error message. The MAP terminal prompts you to enter a correct parameter value.

The Indicat_ command requires at least two of the shelf location parameters. In addition to the shelf location parameters, you can enter one of the following parameters.

Card

Use the <card> parameter to cause the red triangular LED of a SysB (system busy) or ManB CP or packlet to wink. You can use the [timer] option with the <card> parameter.

Clear

Use the <clear> parameter to return LEDs to a normal working state on a single winking or testing CP or packlet. Use the <clear> parameter with the shelf location parameters.

Clearall

Use the <clearall> parameter to return all winking or testing LEDs on all CPs or packlets to a normal working state.

Test

Use the <test> parameter to light the red LED on a single CP or packlet. The CP or packlet does not have to be in a ManB state. LEDs already winking on other CPs or packlets continue to wink. Use the <test> parameter with the shelf location parameters. You can use the <test> parameter with the [timer] option.

Testall

Use the <testall> parameter to light all LEDs on all CPs and packlets. The CPs and packlets do not have to be in a ManB state. LEDs already winking on other CPs or packlets continue to wink. You can use the <testall> parameter with the [timer] option. Do not use the shelf location parameters with the <testall> parameter.

nn

Use the <nn> (slot number) parameter value to indicate the number of the physical shelf slot - 1 to 18.

s

Use the <s> (side) parameter value to indicate the CP or packlet location in the physical shelf - front (f) or rear (r).

p

Use the <p> (position) parameter value to indicate the packlet location in an input/output processor (IOP) - upper (u) or lower (l).

Options

You can enter the following option in the command statement.

Timer

Use the [timer] option to indicate the time (in minutes) to light or wink LEDs. The XA-Core system turns the LEDs off when the time expires. The minimum time period is 1 min. The maximum time period is 999 min. If you do not define a time period, the default time period is 120 min.

XAC MAP level (continued)

Use the [timer] option as follows:

- Use the [timer] option with the <card> parameter to wink a red LED on a single CP or packlet for a period of time.
- Use the [timer] option with the <test> parameter to light the red LED on a CP or packlet for a period of time.
- Use the [timer] option with the <testall> parameter to light the red LED on all CPs and packlets for a period of time.

Command format examples

Example use of the Indicat_ command is shown in Table "Indicat_ command examples". The Indicat_ command syntax is shown in the example below.

COMMAND <parameter> [option]

Indicat_ command examples (Sheet 1 of 2)

Command example	Command description
>INDICAT card 4 r u	INDICAT <card> <nn> <s> <p>: Wink red LED on a single ManB packlet.
>INDICAT card 4 r u 5	INDICAT <card> <nn> <s> <p> [timer]: Wink red LED on a single ManB packlet for 5 min.
>INDICAT clear 4 r u	INDICAT <clear> <nn> <s> <p>: Return LEDs on a single packlet to a normal working state.
>INDICAT clearall	INDICAT <clearall>: Return all LEDs on all CPs and packlets to a normal working state.
>INDICAT test 4 r 5	INDICAT <test> <nn> <s> [timer]: Light all LEDs on a single CP for 5 min. If the command does not include the [timer] option, the XA-Core default time value is 120 min.
>INDICAT testall 5	INDICAT <testall> [timer]: Light all LEDs on all CPs and packlets for 5 min. The amber LEDs on the shelf interface modules (SIM) CPs do not light. The <test> parameter does not cause an audible alarm nor alarm notification on the MAP terminal. CPs or packlets now under test continue to wink

Indicat_ command examples (Sheet 2 of 2)

Command example	Command description
>INDICAT testall	INDICAT <testall>: Light all LEDs on all CPs and packlets for 120 min.

IO

The IO command instructs the XA-Core system to display the IO MAP level.

Menu selection number

6

Type

Navigational

Parameters

There are no command parameters.

Options

There are no command options.

Command format examples

Example use of the IO command is shown in Table "IO command example". The IO command syntax is shown in the example below.

COMMAND

IO command example

Command example	Command description
>IO	Exit from the current MAP session and display the IO MAP level.

PE

The PE command instructs the XA-Core system to display the XA-Core processor element (PE) MAP level.

Menu selection number

5

Type

Navigational

XAC MAP level (continued)

Parameters

There are no command parameters.

Options

There are no command options.

Command format examples

Example use of the PE command is shown in Table "PE command example". The PE command syntax is shown in the example below.

COMMAND

PE command example

Command example	Command description
>PE	Exit from the current MAP session and display the PE MAP level.

Query_

The Query_ command is a common command. The Query_ command causes the MAP terminal to display the following information for a single CP or packlet:

- product engineering code (PEC)
- serial number
- insertion date
- insertion time
- activation date
- software load name
- firmware version
- CP and packlet working state

The parameters determine the type of information displayed.

Menu selection number

18

Type

Informational

Parameters

The Query_ command requires command parameters. If you do not enter any parameters or you enter invalid parameters, the MAP terminal displays an error message. The MAP terminal prompts you to enter a correct parameter value.

If you use the Query_ command with the <card> parameter, enter the shelf location parameters. If you use the Query_ command with the <type> parameter or with the <shelf> parameter, do not enter the shelf location parameters.

Card

Use the <card> parameter to instruct the XA-Core system to perform a query on a CP or packlet. Display the description to the MAP terminal. You must use the <card> parameter with the CP or packlet shelf location parameters.

nn

Use the <nn> (slot number) parameter value to indicate the number of the physical shelf slot - 1 to 18.

s

Use the <s> (side) parameter value to indicate the CP or packlet location in the physical shelf - front (f) or rear (r).

p

Use the <p> (position) parameter value to indicate the packlet location in an input/output processor (IOP) - upper (u) or lower (l).

Shelf

Use the <shelf> parameter to instruct the XA-Core system to retrieve information about all the components installed in the shelf. The <shelf> parameter retrieves the information you would obtain by entering the Query card command for every circuit pack and packlet in the XA-Core.

Subsystem_name

Use the <subsystem_name> parameter to indicate the name of a subsystem. The value of the subsystem name is either SM, PE, or IO. Use the <subsystem_name> parameter only with the <type> parameter.

Type

Use the <type> parameter to indicate that the query applies to a subsystem of type SM, PE, or IO. Use the <type> parameter with the <subsystem name> parameter. The MAP terminal displays the location of all CPs that match the subsystem type. Do not enter shelf location parameters.

XAC MAP level (continued)

Options

There are no command options.

Command format examples

Example use of the Query_ command is shown in Table "Query_ command examples". The Query_ command syntax is shown in the example below.

COMMAND <parameter>

Query_ command examples

Command example	Command description
>QUERY card 4 r	QUERY <card> <nn> <s>: Display the PEC, serial number, insertion/activation dates software load, firmware version, and working state for the CP.
>QUERY card 7 r u	QUERY <card> <nn> <s> <p>: Display the PEC, serial number, insertion/ activation dates, software load, firmware version, and working state for the packlet.
>QUERY shelf	QUERY <shelf>: Display the PEC, serial number, insertion/activation dates, software load, firmware version, and working state for every CP and packlet in the shelf.
>QUERY type io	QUERY <type> <subsystem_name>: Display subsystem name and location of all CPs and packlets that match the subsystem type.

Quit

The Quit command is a common command. The Quit command instructs the XA-Core system to exit from the current MAP session. You can exit to any MAP level that is higher in the MAP level hierarchy.

Note: The XA-Core system continues to execute any previous commands entered.

Menu selection number

0

Type

Navigational

Parameters

The Quit command parameters are optional.

All

Use the <all> parameter to terminate all XA-Core MAP sessions and display the CI prompt.

Incrname

Use the <incrname> parameter to end the current MAP session and display a MAP level higher in the MAP system hierarchy. Enter a MAP level name. The XA-Core system displays the MAP level that is one level higher in the MAP system hierarchy than the <incrname> (increment name) value.

Nlevel

Use the <nlevel> parameter to end the current MAP session and display a MAP level higher in the MAP system hierarchy. Enter a number value to represent the number of DMS MAP levels to step-back in the MAP system hierarchy.

Options

There are no command options.

Command format examples

Example use of the Quit command is shown in Table "Quit command examples". The Quit command syntax is shown in the example below.

XAC MAP level (continued)

COMMAND <parameter>

Quit command examples

Command example	Command description
>QUIT	Use the Quit command with no parameters to exit from the current MAP session. Display a MAP level that is one level above the current MAP session level.
>QUIT mtc	QUIT <incrname>: Exit the current MAP session. Display the MAP level that is one level above the indicated MAP level name.
>QUIT 2	QUIT <nlevel>: Exit the current MAP session. Display the MAP level that is two levels above the current MAP session in the MAP hierarchy.
>QUIT all	QUIT <all>: Exit from all MAP sessions and display the CI prompt.

RTIF

The RTIF command instructs the XA-Core system to display the remote terminal interface (RTIF) MAP level.

Menu selection number

8

Type

Navigational

Parameters

There are no command parameters.

Options

There are no command options.

Command format examples

Example use of the RTIF command is shown in Table "RTIF command example". The RTIF command syntax is shown in the example below.

COMMAND

RTIF command example

Command example	Command description
>RTIF	Exit from the current MAP session and display the RTIF MAP level.

SM

The SM command instructs the XA-Core system to display the shared memory (SM) MAP level.

Menu selection number

4

Type

Navigational

Parameters

There are no command parameters.

Options

There are no command options.

Command format examples

Example use of the SM command is shown in Table "SM command example". The SM command syntax is shown in the example below.

COMMAND

SM command example

Command example	Command description
>SM	Exit from the current MAP session and display the SM MAP.

XAC MAP level (continued)

Tape

The Tape command instructs the XA-Core system to display the XA-Core Tape MAP level.

Menu selection number

10

Type

Navigational

Parameters

There are no command parameters.

Options

There are no command options.

Command format examples

Example use of the Tape command is shown in Table "Tape command example". The Tape command syntax is shown in the example below.

COMMAND

Tape command example

Command example	Command description
>TAPE	Exit from current MAP session and display the Tape MAP

XACMtc

The XACMtc command is a menu command. The XACMtc command instructs the XA-Core system to display the XA-Core maintenance (XACMtc) MAP level.

Menu selection number

3

Type

Navigational

Parameters

There are no command parameters.

Options

There are no command options.

Command format examples

Example use of the XACMtc command is shown in Table "XACMtc command example". The XACMtc command syntax is shown in the example below.

COMMAND

XACMtc command example

Command example	Command description
>XACMTC	Exit from the current MAP session and display the XACMtc MAP level.

This page is left blank intentionally.

XACMtc MAP level

Introduction

Use the XA-Core maintenance (XACMtc) MAP level to display maintenance data on the MAP terminal and to perform maintenance activities. Select the XACMtc menu option from the XAC MAP level to display the XA-Core XACMtc MAP level.

XACMtc MAP level screen

The XACMtc MAP level is an interface that allows operating company personnel to monitor and perform system maintenance activities. The command interpreter output area displays information about the number of traps and the last image and REx tests.

XACMtc MAP level

```
 XAC      MS      IOD     Net      PM      CCS     Lns     Trks     Ext     APPL
  .       .        .       .       .        .       .       .        .        .


XACMtc          Front:   111111111  Rear: 111111   SM     PE      IO     PKLT
 0 Quit         123456789012345678  456789012345   .      .       .      .
 2            Sta: -.-.--..-..----..-  .--.-------.   0      0       0      0
 3            Dep:
 4
 5
 6
 7            Traps:       Per Minute:   = 0           Total = 1
 8            Last Image run at:     1999/02/15 13:13
 9                   restart type= reload
10                      Result    = pass
11 Image      Last XARExTst run at:  1999/03/15 14:25
12 RExTst_    Last XARExTst Type:    full
13 RExInt_    Last XARExTst Result:  notRun
14 Alarm_
15            XACMTC:
16
17 Indicat_
18 Query_
 XMAP0
Time  14:12   >
```

XACMtc menu commands

Menu commands appear on the MAP command menu. Non-menu commands do not appear on the MAP menu list. Enter both menu and non-menu commands in the command interpreter input area. You can enter either the command name or the menu number that matches the command.

XACMtc MAP level (continued)

Table "Summary of XACMtc MAP commands" contains a summary description of valid XACMtc MAP level commands.

Summary of XACMtc MAP commands

Command	Menu #	Type	Function
Alarm_	14	Op/Info	Enable, disable or query alarm notifications
AMDI	Non-menu	Nav	Display the AMDI MAP level
CMIC_	Non-menu	Nav	Display the CMIC MAP level
Disk	Non-menu	Nav	Display the Disk MAP level
ETHR	Non-menu	Nav	Display the ETHR MAP level
Image_	11	Op/Info	Test for image restart capability
Indicat_	17	Info	Cause a CP or packlet LED to wink or clear
IO	Non-menu	Nav	Display the IO MAP level
PE	Non-menu	Nav	Display the PE MAP level
Query_	18	Info	List information for any CP
Quit	0	Nav	Exit from the MAP level now on display
RExInt_	13	Op	Control the intensity of the system Routine Exercise Test (RExTst)
RExTst_	12	Op	Perform manual REx tests to check parts of CP not exercised in normal operation
RTIF	Non-menu	Nav	Display the RTIF MAP level
SM	Non-menu	Nav	Display the SM MAP level
Tape	Non-menu	Nav	Display the Tape MAP level

Alarm_

The Alarm_ command is a common menu command. The Alarm_ command allows you to perform the following tasks:

- permit notification for selected alarms
- disable notification for selected alarms
- query the XA-Core system to identify alarm conditions or examine the status of alarms

Menu selection number

14

XACMtc MAP level (continued)

Type

Operational or Informational

Parameters

The Alarm_ command requires command parameters. If you do not enter any parameters or you enter invalid parameters, the MAP terminal prompts you to enter a correct parameter value. The Alarm_ command requires at least one of the following command parameters:

Alarm_name

Use the <alarm_name> parameter to indicate the name of the XA-Core system alarm. You can use the <alarm_name> parameter with the <disable> and <enable> parameters.

All

Use the <all> parameter to enable or disable notification for all alarms (use with the <enable> or <disable> parameter.

Disable

Use the <disable> parameter to prevent the XA-Core system from displaying alarm notification messages on the MAP screen. You can disable either one alarm at a time or all alarms. Use the <disable> parameter with the Alarm_ command and <alarm_name> parameter to disable a single alarm. Use the <disable> parameter with the <all> parameter to disable all XA-Core alarms. The <disable> parameter remains active until you enable the alarm or the system performs a restart.

Enable

Use the <enable> parameter to instruct the XA-Core system to display an alarm notification message on the MAP terminal. You can enable either one alarm or all alarms. Use the <enable> parameter together with the Alarm_ command and <alarm_name> parameter to enable a single alarm. Use the <enable> parameter with the <all> parameter to enable all XA-Core alarms.

Raised

Use the <raised> parameter to display all active alarms, the alarm severity and enabled/disabled status. You can use the <raised> parameter with the [enabled] or [disabled] options. If you do not enter any options, the XA-Core system MAP displays all active, enabled and disabled alarms.

Options

You can enter one of the following command options in the command statement:

XACMtc MAP level (continued)

Disabled

Use the [disabled] option with the <raised> parameter. The option instructs the XA-Core system to display all active alarms that have a disabled status.

Enabled

Use the [enabled] option with the <raised> parameter. The option instructs the XA-Core system to display all active alarms that have an enabled status.

Command format examples

Example use of the Alarm_ command is shown in Table "Alarm_ command examples". The Alarm_ command syntax is shown in the example below:

COMMAND <parameter> [option]

Alarm_ command examples

Command example	Command description
>ALARM tape	ALARM <alarm_name>: Display the alarm severity and status for a single alarm.
>ALARM all	ALARM <all>: Display the alarm severity and status for all alarms.
>ALARM all disable	ALARM <all> <disable>: Disable notification for all alarms.
>ALARM tape disable	ALARM <alarm_name> <disable>: Disable notification for a single alarm.
>ALARM all enable	ALARM <all> <enable>: Enable notification for all alarms.
>ALARM tape enable	ALARM <alarm_name> <enable>: Enable notification for a single alarm.
>ALARM raised	ALARM <raised>: Display all active alarms
>ALARM raised enabled	ALARM <raised> [enabled]: Display active alarms that have an enabled status
>ALARM raised disabled	ALARM <raised> [disabled]: Display active alarms that have an disabled status

AMDI

The AMDI command is a non-menu command. The AMDI command instructs the XA-Core system to display the AMDI MAP level.

Menu selection number

The XACMtc MAP level does not display an AMDI menu number.

Type

Navigational

Parameters

There are no command parameters.

Options

There are no command options.

Command format examples

Example use of the AMDI command is shown in Table "AMDI command examples". The AMDI command syntax is shown in the example below:

COMMAND

AMDI command examples

Command example	Command description
>AMDI	Exit from the current MAP session and display the AMDI MAP level.

CMIC

The CMIC command is a non-menu command. The CMIC command instructs the XA-Core system to display the CMIC MAP level.

Menu selection number

The XACMtc MAP level does not display a CMIC menu number.

Type

Navigational

Parameters

There are no command parameters.

Options

There are no command options.

XACMtc MAP level (continued)

Command format examples

Example use of the CMIC command is shown in Table "CMIC command examples". The CMIC command syntax is shown in the example below:

COMMAND

CMIC command examples

Command example	Command description
>CMIC	Exit from the current MAP session and display the CMIC MAP level.

Disk

The Disk command is a non-menu command. The Disk command instructs the XA-Core system to display the Disk MAP level.

Menu selection number

The XACMtc MAP level does not display a Disk menu number.

Type

Navigational

Parameters

There are no command parameters.

Options

There are no command options.

Command format examples

Example use of the Disk command is shown in Table "Disk command examples". The Disk command syntax is shown in the example below:

COMMAND

Disk command examples

Command example	Command description
>DISK	Exit from current MAP session and display the Disk MAP level.

ETHR

The ETHR command is a non-menu command. The ETHR command instructs the XA-Core system to display the ETHR MAP level.

Menu selection number

The XACMtc MAP level does not display an ETHR menu number.

Type

Navigational

Parameters

There are no command parameters.

Options

There are no command options.

Command format examples

Example use of the ETHR command is shown in Table "ETHR command examples". The ETHR command syntax is shown in the example below:

COMMAND

ETHR command examples

Command example	Command description
>ETHR	Exit from the current MAP session and display the ETHR MAP level.

Image_

The Image_ command checks for correct functioning of software processes and tests image restart capability. The Image test is also run automatically by the system as part of a full, XA-Core system REx test.

> ***Note:*** The image test cannot run if shared memory is operating in simplex mode (no redundancy). If the shared memory is operating in simplex, there is not enough core and spare memory to support an image split.

The XA-Core system performs the following operations during an Image test:

- Complete system split: XA-Core shared memory is split into an active and inactive image. A single PE is dedicated to the inactive image to provide

XACMtc MAP level (continued)

processor service. Both the active and inactive images are identical. The image test is run on the inactive image copy.

- Restart: XA-Core performs an Image restart on the inactive side. The system performs one type of image restart for each image test (warm, cold, or reload restart).
- Test: The Image test software checks the quality of the image restart on the inactive image. The active image receives the results of the image restart test. Use the Image Query command to display the result of the image test to the MAP terminal.
- System unsplit: Image synchronization is complete. The inactive image integrates with the active image. The PE on the inactive image returns to normal service.

The XA-Core system responds to the Image_ command and performs the indicated XA-Core restart on the inactive image. The system performs an image test on the restart and sends the results to the active image. The inactive and active images are synchronized and joined.

Note: If the image test fails, call the next level of support immediately.

Menu selection number

11

Type

Operational or Informational

Parameters

The Image_ command requires command parameters. If you do not enter any parameters or you enter invalid parameters, the MAP terminal displays an error message. The MAP terminal prompts you to enter a correct parameter value.

Test

Use the <test> parameter to instruct the system to perform an Image test. Use the <test> parameter with the <warm>, <cold> or <reload> restart parameters.

Warm

Use the <warm> parameter to indicate the type of restart procedure. The <warm> parameter instructs the system to use the warm restart procedure on the inactive image after the Image test is complete. Use the <warm> parameter with the <test> or <change> parameter.

Cold

Use the <cold> parameter to indicate the type of restart procedure. The <cold> parameter instructs the system to use the cold restart procedure on the inactive image after the Image test is complete. Use the <cold> parameter with the <test> or <change> parameter.

Reload

Use the <reload> parameter to indicate the type of restart procedure The <reload> parameter instructs the system to use the image reload procedure on the inactive image after the Image test is complete. Use the <reload> parameter with the <test> or <change> parameter.

Query

Display information on the last run Image test and the next planned image test started by a system REx test.

Change

Change the restart type for the next image test started by a system REx test. Use the <change> parameter with the <warm>, <cold> or <reload> parameter.

Options

You can enter the following command option in the command statement.

Noprompt

Use the [noprompt] option to bypass system prompts and continue to execute the command. Use the [noprompt] option with caution. System messages and prompts help you to prevent a possible outage.

Nowait

Use the [nowait] option to display the MAP prompt and allow you to enter other system commands while the XA-Core system performs the image test task.

Command format examples

Example use of the Image_ command is shown in Table "Image_ command examples". The Image_ command syntax is shown in the example below:

XACMtc MAP level (continued)

COMMAND <parameter> [option]

Image_ command examples

Command example	Command description
>IMAGE test warm	IMAGE <test> <warm>: Use the warm restart procedure on the inactive image after the Image test is complete.
>IMAGE test cold	IMAGE <test> <cold>: Use the cold restart procedure on the inactive image after the Image test is complete.
>IMAGE test reload	IMAGE <test> <reload>: Use the image reload procedure on the inactive image after the Image test is complete.
>IMAGE query	IMAGE <query>: Display information on the last run Image test and the next planned Image test.
>IMAGE change warm	IMAGE <change> <warm>: Change the next image test type to warm.
>IMAGE change cold	IMAGE <change> <cold>: Change the next image test type to cold.
>IMAGE change reload	IMAGE <change> <reload>: Change the next image test type to reload/restart.
>IMAGE change reload noprompt	IMAGE <change> <reload> [noprompt]: Change the next image test type to reload/restart. Display the prompt to enter other commands while the task is executing.

Indicat_

The Indicat_ command is a common command. The command causes LEDs on CPs or packlets to wink or illuminate. The command allows you to locate a device on the physical shelf or to make sure all LEDs work. CPs and packlets must be in a ManB state before you use the Indicat_ card command.

Note: If you use the Indicat_ command with the <test> or <testall> parameters, CPs and packlets do not have to be in a ManB state.

XACMtc MAP level (continued)

Menu selection number

17

Type

Informational

Parameters

The Indicat_ command requires parameters. If you do not enter any parameters or you enter invalid parameters, the MAP terminal displays an error message. The MAP terminal prompts you to enter a correct parameter value.

The Indicat_ command requires at least two of the shelf location parameters. In addition to the shelf location parameters, you can enter one of the following parameters:

Card

Use the <card> parameter to cause the red triangular LED of a SysB (system busy) or ManB CP or packlet to wink. You can use the [timer] option with the <card> parameter.

Clear

Use the <clear> parameter to return LEDs to a normal working state on a single winking or testing CP or packlet. Use the <clear> parameter with the shelf location parameters.

Clearall

Use the <clearall> parameter to return all winking or testing LEDs on all CPs or packlets to a normal working state.

Test

Use the <test> parameter to light the red LED on a single CP or packlet. The CP or packlet does not have to be in a ManB state. LEDs already winking on other CPs or packlets continue to wink. Use the <test> parameter with the shelf location parameters. You can use the <test> parameter with the [timer] option.

Testall

Use the <testall> parameter to light all LEDs on all CPs and packlets. The CPs and packlets do not have to be in a ManB state. LEDs already winking on other CPs or packlets continue to wink. You can use the <testall> parameter with the [timer] option. Do not use the shelf location parameters with the <testall> parameter.

XACMtc MAP level (continued)

nn

Use the <nn> (slot number) parameter value to indicate the number of the physical shelf slot - 1 to 18.

s

Use the <s> (side) parameter value to indicate the CP or packlet location in the physical shelf - front (f) or rear (r).

p

Use the <p> (position) parameter value to indicate the packlet location in an input/output processor (IOP) - upper (u) or lower (l).

Options

You can enter the following option in the command statement:

Timer

Use the [timer] option to indicate the time (in minutes) to light or wink LEDs. The XA-Core system turns the LEDs off when the time expires. The minimum time period is 1 min. The maximum time period is 999 min. If you do not define a time period, the default time period is 120 min.

Use the [timer] option as follows:

- use the [timer] option with the <card> parameter to wink a red LED on a single CP or packlet for a period of time.
- use the [timer] option with the <test> parameter to light the red LED on a CP or packlet for a period of time.
- use the [timer] option with the <testall> parameter to light the red LED on all CPs and packlets for a period of time.

Command format examples

Example use of the Indicat_ command is shown in Table "Indicat_ command examples". The Indicat_ command syntax is shown in the example below:

COMMAND <parameter> [option]

Indicat_ command examples (Sheet 1 of 2)

Command example	Command description
>INDICAT card 4 r u	INDICAT <card> <nn> <s> <p>: Wink red LED on a single ManB packlet.

Indicat_ command examples (Sheet 2 of 2)

Command example	Command description
>INDICAT card 4 r u 5	INDICAT <card> <nn> <s> <p> [timer]: Wink red LED on a single ManB packlet for 5 min.
>INDICAT clear 4 r u	INDICAT <clear> <nn> <s> <p>: Return LEDs on a single packlet to a normal working state.
>INDICAT clearall	INDICAT <clearall>: Return all LEDs on all CPs and packlets to a normal working state.
>INDICAT test 4 r 5	INDICAT <test> <nn> <s> [timer]: Light all LEDs on a single CP for 5 min. If the command does not include the [timer] option, the XA-Core default time value is 120 min.
>INDICAT testall 5	INDICAT <testall> [timer]: Light all LEDs on all CPs and packlets for 5 min. The amber LEDs on the shelf interface modules (SIM) CPs do not light. The <test> parameter does not cause an audible alarm nor alarm notification on the MAP terminal. CPs or packlets now under test continue to wink
>INDICAT testall	INDICAT <testall>: Light all LEDs on all CPs and packlets for 120 min.

IO

The IO command is a non-menu command. The IO command instructs the XA-Core system to display the IO MAP level.

Menu selection number

The XACMtc MAP level does not display an IO menu number.

Type

Navigational

Parameters

There are no command parameters.

XACMtc MAP level (continued)

Options

There are no command options.

Command format examples

Example use of the IO command is shown in Table "IO command example". The IO command syntax is shown in the example below:

COMMAND

IO command example

Command example	Command description
>IO	Exit from the current MAP session and display the IO MAP level.

PE

The PE command is a non-menu command. The PE command instructs the XA-Core system to display the XA-Core processor element (PE) MAP level.

Menu selection number

The XACMtc MAP level does not display a PE menu number.

Type

Navigational

Parameters

There are no command parameters.

Options

There are no command options.

Command format examples

Example use of the PE command is shown in Table "PE command example". The PE command syntax is shown in the example below:

COMMAND

PE command example

Command example	Command description
>PE	Exit from the current MAP session and display the PE MAP level.

Query_

The Query_ command is a common command. The Query_ command causes the MAP terminal to display the following information for a single CP or packlet:

- product engineering code (PEC)
- serial number
- insertion date
- insertion time
- activation date
- software load name
- firmware version
- CP and packlet working state

The parameters determine the type of information displayed.

Menu selection number

18

Type

Informational

Parameters

The Query_ command requires command parameters. If you do not enter any parameters or you enter invalid parameters, the MAP terminal displays an error message. The MAP terminal prompts you to enter a correct parameter value.

If you use the Query_ command with the <card> parameter, enter the shelf location parameters. If you use the Query_ command with the <type> parameter or with the <shelf> parameter, do not enter the shelf location parameters.

Card

Use the <card> parameter to instruct the XA-Core system to perform a query on a CP or packlet. Display the description to the MAP terminal. You must use the <card> parameter with the CP or packlet shelf location parameters.

nn

Use the <nn> (slot number) parameter value to indicate the number of the physical shelf slot - 1 to 18.

XACMtc MAP level (continued)

s
Use the <s> (side) parameter value to indicate the CP or packlet location in the physical shelf - front (f) or rear (r).

p
Use the <p> (position) parameter value to indicate the packlet location in an input/output processor (IOP) - upper (u) or lower (l).

Shelf
Use the <shelf> parameter to instruct the XA-Core system to retrieve information about all the components installed in the shelf. The <shelf> parameter retrieves the information you would obtain by entering the Query card command for every circuit pack and packlet in the XA-Core.

Subsystem_name
Use the <subsystem_name> parameter to indicate the name of a subsystem. The value of the subsystem name is either SM, PE, or IO. Use the <subsystem_name> parameter only with the <type> parameter.

Type
Use the <type> parameter to indicate that the query applies to a subsystem of type SM, PE, or IO. Use the <type> parameter with the <subsystem name> parameter. The MAP terminal displays the location of all CPs that match the subsystem type. Do not enter shelf location parameters.

Options
There are no command options.

Command format examples
Example use of the Query_ command is shown in Table "Query_ command examples". The Query_ command syntax is shown in the example below:

COMMAND <parameter>

Query_ command examples (Sheet 1 of 2)

Command example	Command description
>QUERY card 4 r	QUERY <card> <nn> <s>: Display the PEC, serial number, insertion/activation dates software load, firmware version and working state for the CP.

Query_ command examples (Sheet 2 of 2)

Command example	Command description
>QUERY card 7 r u	QUERY <card> <nn> <s> <p>: Display the PEC, serial number, insertion/ activation dates, software load, firmware version and working state for the packlet.
>QUERY shelf	QUERY <shelf>: Display the PEC, serial number, insertion/activation dates, software load, firmware version, and working state for every CP and packlet in the shelf.
>QUERY type io	QUERY <type> <subsystem_name>: Display subsystem name and location of all CPs and packlets that match the subsystem type.

Quit

The Quit command is a common command. The Quit command instructs the XA-Core system to exit from the current MAP session. You can exit to any MAP level that is higher in the MAP level hierarchy.

Note: The XA-Core system continues to execute any previous commands entered.

Menu selection number

0

Type

Navigational

Parameters

The Quit command parameters are optional.

All

Use the <all> parameter to terminate all XA-Core MAP sessions and display the CI prompt.

Incrname

Use the <incrname> parameter to end the current MAP session and display a MAP level higher in the MAP system hierarchy. Enter a MAP level name. The

XACMtc MAP level (continued)

XA-Core system displays the MAP level that is one level higher in the MAP system hierarchy than the <incrname> (increment name) value.

Nlevel

Use the <nlevel> parameter to end the current MAP session and display a MAP level higher in the MAP system hierarchy. Enter a number value to represent the number of DMS MAP levels to step-back in the MAP system hierarchy.

Options

There are no command options.

Command format examples

Example use of the Quit command is shown in Table "Quit command examples". The Quit command syntax is shown in the example below:

COMMAND <parameter>

Quit command examples

Command example	Command description
>QUIT	Use the Quit command with no parameters to exit from the current MAP session. Display a MAP level that is one level above the current MAP session level.
>QUIT mtc	QUIT <incrname>: Exit the current MAP session. Display the MAP level that is one level above the indicated MAP level name.
>QUIT 2	QUIT <nlevel>: Exit the current MAP session. Display the MAP level that is two levels above the current MAP session in the MAP hierarchy.
>QUIT all	QUIT <all>: Exit from all MAP sessions and display the CI prompt.

RExInt_

The RExInt_ (REx Intensity) command allows you to specify the intensity of the system REx tests. System REx tests are also referred to as SREx tests. SREx tests are REx tests that the system runs automatically each day. The “intensity” of the SREx tests controls which class of REx tests the system runs. (For descriptions of the test classes, see the description of the "REx_class" parameter, below.)

Default SREx schedule

If you never use the RExInt_ command, the system performs SREx tests according to the default SREx schedule. For a description of that schedule, see the section titled “SREx” in the chapter titled “Preventive maintenance” in *XA-Core Maintenance Manual*, 297-8991-510.

Menu selection number

13

Type

Operational/Informational

Parameters

The RExInt_ command requires command parameters. If you do not enter any parameters or you enter invalid parameters, the MAP terminal displays an error message. The MAP terminal prompts you to enter a correct parameter value.

Clearday

Use the <clearday> parameter to reset the REx test class to the default value for a single day. Use the <clearday> parameter with the <REx_day> parameter value.

REx_class

Enter the <rex_class> parameter value to name the REx test class. Use the REx_class values: all, base, full, io, pe, sm. Use the <rex_class> parameter value with the <clearday> and <setday> parameters.

- All: Use the All REx test class to instruct the system to perform an InSv and OOS Rex test on PEs, SMs, IOPs, packlets. The InSv test checks all CPs in the physical shelf during a single test cycle. The OOS test checks a single CP from each subsystem during a single test cycle. The system does not repeat the OOS test for the same CP during the next planned Full REx test.
- Base: Use the Base REx test class to instruct the system to perform a Base REx test. By default, Base REx tests are run each day except on a

XACMtc MAP level (continued)

Thursday. A Base REx test performs InSv tests on all CPs in all subsystems. The Base REx class test also performs an image test.

- Full: Use the Full REx test class to instruct the system to perform a Full REx test. By default, the XA-Core system performs a Full REx test each Thursday. A Full REx class test performs the following tasks:
  - — InSv tests on all CPs in all subsystems
  - — an OOS test on one CP from each subsystem type (PE, SM, IO). The system performs an OOS test on a different subsystem CP and packlet each week.
  - — an Image test
- IO: Use the IO REx test class to instruct the system to perform an OOS REx test on a different IOP CP each week. The system performs an OOS test on related packlets at the same time. The system selects a different IOP CP for each test cycle. The system does not repeat a REx test on the same CP during the next planned Full REx test.
- PE: Use the PE REx test class to instruct the system to perform an OOS REx test on a different PE CP each week. The system selects a different PE CP for each test cycle. The system does not repeat the test for the same CP during the next planned Full REx test.
- SM: Use the SM REx test class to instruct the system to perform an OOS REx test on a different SM CP each week. The system selects a different SM CP for each test cycle. The system does not repeat the test for the same CP during the next planned Full REx test.

REx_day

Enter the <rex_day> parameter value to name the day on which to reset or schedule a REx test. Use the <REx_day> parameter values: sun, mon, tue, wed, thu, fri, sat. Use the <rex_day> parameter value with the <clearday> and <setday> parameters.

Setday

Use the <setday> parameter to set the day and REx test class for a system REx test. Use the <setday> parameter with the <rex_day> and <rex_class> parameter values.

Status

Use the <status> parameter to display the current schedule for system REx tests. The MAP terminal displays the REx test schedule for the week.

Options

You can enter the following options in the command statement:

Continue

Use the [continue] option to continue with the REx test until the end (or until it cannot continue).

Noprompt

Use the [noprompt] option to bypass system prompts and continue to execute the command. Use the [noprompt] option with caution. System messages and prompts help you to prevent a possible outage.

Command format examples

Example use of the RExInt_ command is shown in Table "RExInt_ command examples". The RExInt_ command syntax is shown in the example below:

COMMAND <parameter> [option]

RExInt_ command examples

Command example	Command description
>REXINT clearday mon	REXINT <clearday> <rex_day>: Reset the REx test class set for Monday to the default value.
>REXINT clearday mon noprompt	REXINT <clearday> <rex_day> [noprompt]: Reset the REx test class set for Monday to the default value. Do not display warning or prompt messages.
>REXINT setday mon all	REXINT setday <rex_day> <rex_class>: Set the Monday REx test class to all.
>REXINT setday mon all continue	REXINT setday <rex_day> <rex_class> [continue]: Set the Monday REx test class to all. Continue with the test to the end and do not pause if any errors.
>REXINT status	REXINT <status>: Display the daily REx test schedule.

RExTst_

The RExTst_ (REx test) command performs tests to check parts of XA-Core CPs and packlets not tested in normal operation.

XACMtc MAP level (continued)

The XA-Core performs the following during a REx test:

- Complete system split: XA-Core shared memory is split into an active and inactive image. A single PE is dedicated to provide processor service for the inactive image. Both the active and inactive images are identical. The image test is run on the inactive image copy.
- Test: The Image test software performs a restart on the inactive image and sends the results to the active image. The MAP terminal displays the image test results.
- Restart: XA-Core performs an Image restart on the inactive side. The system performs one type of image restart for each image test (warm, cold, or reload restart).
- System unsplit: Image synchronization is complete and the PE serving the inactive image, returns to normal service.

Note 1: If the REx test fails, call the next level of support immediately.

Note 2: During the REx test, if the system intends to take a PE circuit pack out of service, it does a check to determine whether taking the circuit pack out of service will cause a capacity degradation to occur. If the system determines that a capacity degradation will occur, the system will not take the PE circuit pack out of service.

Note 3: A REx test will not run if the system is in an E2 condition (potential degradation or outage).

Menu selection number

12

Type

Operational and Informational

Parameters

The RExTst_ command requires command parameters. If you do not enter any parameters or you enter invalid parameters, the MAP terminal displays an error message. The MAP terminal prompts you to enter a correct parameter value.

XACMtc MAP level (continued)

The RExTst_ command requires the following parameters:

Continue

Use the <continue> parameter to continue with the REx test until the end (or until it cannot continue). The MAP displays all errors found during the tests. The MAP terminal displays a message to indicate if the REx test cannot complete the process.

Counts

Use the <counts> parameter with the RExTst_ command. The <counts> parameter instructs the XA-Core system to display the number errors found during the last run test. The error counts are listed by category, for example, PE faults, SM faults, IOP faults, and so on.

Lastresult

Use the <lastresult> parameter to display the results of the last run XA-Core REx test to the MAP.

Resetcounts

Use the <resetcounts> parameter to clear the REx test error counters. The MAP terminal displays a message that indicates the count registers are clear.

Run

Use the <run> parameter with the <REx_class> parameter to perform a REx test with the indicated REx class.

REx_class

Enter the <rex_class> parameter value to name the REx test class. Use the REx_class values: all, base, full, io, pe, sm. Use the <rex_class> parameter value with the <clearday> and <setday> parameters.

- All: Use the All REx test class to instruct the system to perform an InSv and OOS Rex test on PEs, SMs, IOPs, packlets. The InSv test checks all CPs in the physical shelf during a single test cycle. The OOS test checks a single CP from each subsystem during a single test cycle. The system does not repeat the OOS test for the same CP during the next planned Full REx test.
- Base: Use the Base REx test class to instruct the system to perform a Base REx test. A Base REx test performs InSv tests on all CPs in all sub-systems. The Base REx class test also performs an image test.

XACMtc MAP level (continued)

- Full: Use the Full REx test class to instruct the system to perform a Full REx test. A Full REx class test performs the following tasks:
  - — InSv tests on all CPs in all subsystems
  - — an OOS test on one CP from each subsystem type (PE, SM, IO). The system performs an OOS test on a different subsystem CP and packlet each week.
  - — an Image test
- IO: Use the IO REx test class to instruct the system to perform an OOS REx test on a different IOP CP each week. The system performs an OOS test on related packlets at the same time. The system selects a different IOP CP for each test cycle. The system does not repeat a REx test on the same CP during the next planned Full REx test.
- PE: Use the PE REx test class to instruct the system to perform an OOS REx test on a different PE CP each week. The system selects a different PE CP for each test cycle. The system does not repeat the test for the same CP during the next planned Full REx test.
- SM: Use the SM REx test class to instruct the system to perform an OOS REx test on a different SM CP each week. The system selects a different SM CP for each test cycle. The system does not repeat the test for the same CP during the next planned Full REx test.

Terminate

Use the <terminate> parameter to instruct the XA-Core system to stop the REx test immediately.

Thresholds

Use the <thresholds> parameter with the RExTst_ command. The <thresholds> parameter instructs the XA-Core system to display the limit values for the error categories.

- PE faults
- SM faults
- IOP faults
- HIOP faults
- HCMIC faults
- Tape faults
- Disk faults
- RTIF packlet faults
- CMIC packlet faults

- AMDI packlet faults
- ETHR packlet faults
- RTIF local port faults
- RTIF remote port faults
- RTIF local link faults
- RTIF remote link faults
- AMDI port faults
- AMDI link faults
- CMIC port faults
- CMIC link faults
- ETHR port faults
- ETHR link faults
- TOD faults

Options

You can enter one of the following options in the command statement:

Nowait

Use the [nowait] option to proceed with other work while the REx test is executing.

Noprompt

Use the [noprompt] option to block the display of error messages, bypass system prompts and continue with other system tasks. Use the [noprompt] option for commands that take several minutes to execute.

Use the [noprompt] option with caution. System messages and prompts help you to prevent a possible outage.

XACMtc MAP level (continued)

Command format examples

Example use of the RExTst_ command is shown in Table "RExTst_ command examples". The RExTst_ command syntax is shown in the example below:

COMMAND <parameter> [option]

RExTst_ command examples

Command examples	Command description
>REXTST run all	REXTST <run> <rex_class>: REx test all XA-Core CPs and packlets
>REXTST run all noprompt	REXTST <run> <rex_class> [noprompt]: REx test all XA-Core CPs and packlets. Do not display prompt message.
>REXTST run all nowaitt	REXTST <run> <rex_class> [noprompt]: REx test all XA-Core CPs and packlets. Do not display prompt message.
>REXTST terminate	REXTST <run> <terminate>: Stop performing the REx test.
>REXTST run full continue	REXTST <run> <rex_class> <continue>: Perform a Full REx test for all XA-Core InSv CPs and packlets. Continue with the REx test until the end.
>REXTST Resetcounts	REXTST <Resetcounts>: Clear the REx test error counters
>REXTST Rexresult	REXTST <Rexresult>: Display the results of the last run XA-Core REx test to the MAP terminal
>REXTST counts	REXTST <counts>: Display the error thresholds or the Counts. PE faults, SM faults, IOP faults, CMIC packlet faults, link faults, TOD faults, RTIF packlet faults, RTIF port faults, tape faults, disk faults.
>REXTST lastresult	REXTST <lastresult>: Display more information on the last run REx test results

RTIF

The RTIF command is a non-menu command. The RTIF command instructs the XA-Core system to display the remote terminal interface (RTIF) MAP level.

Menu selection number

The XACMtc MAP level does not display an RTIF menu number.

Type

Navigational

Parameters

There are no command parameters.

Options

There are no command options.

Command format examples

Example use of the RTIF command is shown in Table "RTIF command example". The RTIF command syntax is shown in the example below:

COMMAND

RTIF command example

Command example	Command description
>RTIF	Exit from the current MAP session and display the RTIF MAP level.

SM

The SM command is a non-menu command. The SM command instructs the XA-Core system to display the shared memory (SM) MAP level.

Menu selection number

The XACMtc MAP does not display an SM menu number.

Type

Navigational

Parameters

There are no command parameters.

XACMtc MAP level (end)

Options

There are no command options.

Command format examples

Example use of the SM command is shown in Table "SM command example". The SM command syntax is shown in the example below:

COMMAND

SM command example

Command example	Command description
>SM	Exit from the current MAP session and display the SM MAP level.

Tape

The Tape command is a non-menu command. The Tape command instructs the XA-Core system to display the XA-Core Tape MAP level.

Menu selection number

The XACMtc MAP does not display a Tape menu number.

Type

Navigational

Parameters

There are no command parameters.

Options

There are no command options.

Command format examples

Example use of the Tape command is shown in Table "Tape command example". The Tape command syntax is shown in the example below:

COMMAND

Tape command example

Command example	Command description
>TAPE	Exit from the current MAP session and display the Tape MAP level.

Shared Memory (SM) MAP level

Introduction

Use the XA-Core Shared Memory (SM) MAP to perform maintenance actions upon the XA-Core SM circuit packs (CPs). Select the SM menu option from the main XAC MAP to display the XA-Core SM MAP level.

SM MAP level screen

The SM MAP level is an interface that allows you to monitor and perform shared memory system maintenance activities. The command interpreter output area displays the SM synchronize state and amount of total physical, ready and available memory.

SM MAP level

```
XAC      MS      IOD      Net      PM      CCS      Lns      Trks     Ext     APPL
 .        .        .        .        .        .        .        .        .        .
 .

SM                 Front:   111111111  Rear: 111111   SM      PE      IO      PKLT
 0 Quit            123456789012345678  456789012345   .       .       .       .
 2                 -.----..-..--.-..-  .--.-------.   0       0       0       0
 3            Sta:
 4            Dep:
 5            Typ:       ** **            *
 6 Tst_        Physical: 1920          Useable: 1920        Available: 576
 7 Bsy_        SYNC State: duplex
 8 RTS_        SM:
 9
10
11
12 Uneq_
13
14 Alarm_
15 Cntrs_
16 Trnsl_
17 Indicat_
18 Query_
 XMAP0
Time  14:12   >
```

SM menu commands

Menu commands appear on the MAP command menu. Non-menu commands do not appear on the MAP menu list. Enter both menu and non-menu commands in the command interpreter input area. You can enter either the command name or the menu number that matches the command.

Shared Memory (SM) MAP level (continued)

Table "Summary of SM MAP level commands" contains a summary description of SM MAP level commands.

Summary of SM MAP level commands

Command	Menu #	Type	Function
Alarm_	14	Op/Info	Enable, disable or query alarm notifications
AMDI	Non-menu	Nav	Display the AMDI MAP level
Bsy_	7	Op	Place an SM CP in a ManB state
CMIC	Non-menu	Nav	Display the CMIC MAP level
Cntrs_	15	Info	Display all non-zero system-busy (SysB) transition counters, or reset the SysB transition counters for a specified component
Disk	Non-menu	Nav	Display the Disk MAP level
ETHR	Non-menu	Nav	Display the ETHR MAP level
Indicat_	17	Info	Cause a CP or packlet LED to wink or clear
IO	Non-menu	Nav	Display the IO MAP level
PE	Non-menu	Nav	Display the PE MAP level
Query_	18	Info	List information for any CP or packlet
Quit	0	Nav	Exit from the current MAP level
RTIF	Non-menu	Nav	Display the RTIF MAP level
RTS_	8	Op	Test and return an SM CP to service
Tape	Non-menu	Nav	Display the Tape MAP level
Trnsl_	16	Op	Display the relationship between the SM CP slot number and memory addresses
Tst_	6	Op	Perform a test on an SM CP
Uneq	12	Info	Unequip a processor element (PE) slot or a shared memory (SM) slot
XACMtc	Non-menu	Nav	Display the XACMtc MAP level

Alarm_

The Alarm_ command is a common menu command. The Alarm_ command allows you to perform the following tasks:

- permit notification for selected alarms
- disable notification for selected alarms
- query the XA-Core system to identify alarm conditions or examine the status of alarms

Menu selection number

14

Type

Operational or Informational

Parameters

The Alarm_ command requires command parameters. If you do not enter any parameters or you enter invalid parameters, the MAP terminal prompts you to enter a correct parameter value. The Alarm_ command requires at least one of the following command parameters:

Alarm_name

Use the <alarm_name> parameter to indicate the name of the XA-Core system alarm. You can use the <alarm_name> parameter with the <disable> and <enable> parameters.

All

Use the <all> parameter to enable or disable notification for all alarms (use with the <enable> or <disable> parameter.

Disable

Use the <disable> parameter to prevent the XA-Core system from displaying alarm notification messages on the MAP screen. You can disable either one alarm at a time or all alarms. Use the <disable> parameter with the Alarm_ command and <alarm_name> parameter to disable a single alarm. Use the <disable> parameter with the <all> parameter to disable all XA-Core alarms. The <disable> parameter remains active until you enable the alarm or the system performs a restart.

Enable

Use the <enable> parameter to instruct the XA-Core system to display an alarm notification message on the MAP terminal. You can enable either one alarm or all alarms. Use the <enable> parameter together with the Alarm_

Shared Memory (SM) MAP level (continued)

command and <alarm_name> parameter to enable a single alarm. Use the <enable> parameter with the <all> parameter to enable all XA-Core alarms.

Raised

Use the <raised> parameter to display all active alarms, the alarm severity and enabled/disabled status. You can use the <raised> parameter with the [enabled] or [disabled] options. If you do not enter any options, the XA-Core system MAP displays all active, enabled and disabled alarms.

Options

You can enter one of the following command options in the command statement:

Disabled

Use the [disabled] option with the <raised> parameter. The option instructs the XA-Core system to display all active alarms that have a disabled status.

Enabled

Use the [enabled] option with the <raised> parameter. The option instructs the XA-Core system to display all active alarms that have an enabled status.

Command format examples

Example use of the Alarm_ command is shown in Table "Alarm_ command examples". The Alarm_ command syntax is shown in the example below:

COMMAND <parameter> [option]

Alarm_ command examples (Sheet 1 of 2)

Command example	Command description
>ALARM tape	ALARM <alarm_name>: Display the alarm severity and status for a single alarm.
>ALARM all	ALARM <all>: Display the alarm severity and status for all alarms.
>ALARM all disable	ALARM <all> <disable>: Disable notification for all alarms.
>ALARM tape disable	ALARM <alarm_name> <disable>: Disable notification for a single alarm.
>ALARM all enable	ALARM <all> <enable>: Enable notification for all alarms.

Shared Memory (SM) MAP level (continued)

Alarm_ command examples (Sheet 2 of 2)

Command example	Command description
>ALARM tape enable	ALARM <alarm_name> <enable>: Enable notification for a single alarm.
>ALARM raised	ALARM <raised>: Display all active alarms
>ALARM raised enabled	ALARM <raised> [enabled]: Display active alarms that have an enabled status
>ALARM raised disabled	ALARM <raised> [disabled]: Display active alarms that have an disabled status

AMDI

The AMDI command is a non-menu command. The AMDI command instructs the XA-Core system to display the AMDI MAP level.

Menu selection number

The SM MAP level does not display an AMDI menu number.

Type

Navigational

Parameters

There are no command parameters.

Options

There are no command options.

Command format examples

Example use of the AMDI command is shown in Table "AMDI command examples". The AMDI command syntax is shown in the example below:

COMMAND

AMDI command examples

Command example	Command description
>AMDI	Exit from the current MAP session and display the AMDI MAP level.

Shared Memory (SM) MAP level (continued)

Bsy_

The Bsy_ (Busy) command places an in-service (InSv), in-service trouble (IsTb) or SysB SM CP in a ManB state. The XA-Core system allows an SM CP to be put in a ManB state under the following conditions:

- an SM CP has no configured memory addresses and is not active
- the SM configuration is now in triplex
- the SM configuration is now in duplex (plus one spare)

Note: The XA-Core system does not execute the Bsy_ command if the SM configuration changes from duplex to simplex mode. The MAP terminal displays an error message. You can continue by using the [force] option.

Menu selection number

7

Type

Operational

Parameters

The Bsy_ command requires command parameters. If you do not enter any parameters or you enter invalid parameters, the MAP terminal displays an error message. The MAP terminal prompts you to enter a correct parameter value. The Bsy_ command requires the following command parameters:

nn

Use the <nn> (slot number) parameter value to indicate the number of the physical shelf slot - 1 to 18.

s

Use the <s> (side) parameter value to indicate the packlet location in the physical shelf - front (f) or rear (r).

Options

You can enter one of the following command options in the command statement:

Force

The [force] option instructs the system to continue to change from duplex to simplex memory configuration. The MAP terminal displays a prompt message. The [force] option won't operate if the XA-Core system detects that SM configuration is now in simplex mode.

Use the Force option with caution. System messages and prompts help you to prevent a possible outage.

Noprompt

Use the [noprompt] option to bypass system prompts and continue to execute the command. The [noprompt] option won't operate if the XA-Core system detects a total loss of redundancy as a result of the command. Use the [noprompt] option with caution. System messages and prompts help you to prevent a possible outage.

Command format examples

Example use of the Bsy_ command is shown in Table "Bsy_ command examples". The Bsy_ command syntax is shown in the example below:

COMMAND <parameter> [option]

Bsy_ command examples

Command use	Command description
>BSY 4 r	BSY <nn> <s> Place the SM CP in a ManB state.
>BSY 4 r force	BSY <nn> <s> [force]: Place the SM CP in a ManB state if total loss of redundancy does not result.
>BSY 4 r noprompt	BSY <nn> <s> [noprompt]: Place the SM CP in a ManB state. Block warning/ prompt messages.

CMIC

The CMIC command is a non-menu command. The CMIC command instructs the XA-Core system to display the CMIC MAP level.

Menu selection number

The SM MAP level does not display a CMIC menu number.

Type

Navigational

Parameters

There are no command parameters.

Shared Memory (SM) MAP level (continued)

Options

There are no command options.

Command format examples

Example use of the CMIC command is shown in Table "CMIC command examples". The CMIC command syntax is shown in the example below:

COMMAND

CMIC command examples

Command example	Command description
>CMIC	Exit from the current MAP session and display the CMIC MAP level.

Cntrs_

The Cntrs_ command instructs the XA-Core system to either display the current values of all non-zero system-busy (SysB) transition counters, or to reset to zero the SysB transition counters for a specified component. A SysB transition counter counts the number of times that a component's state changes from in-service to system-busy.

The system maintains separate SysB transition counters for each instance of each of the following components:

- IOP, HIOP, and HCMIC circuit packs
- all packlets: disk, tape, CMIC, RTIF, Ethernet, and AMDI
- sections of HIOP circuit packs that are supporting ETHR and AMDI connections
- sections of HCMIC circuit packs that are supporting CMIC, RTIF, and ETHR connections
- time-of-day (TOD) devices
- ports

For each component, the system counts the SysB transitions that occur during the current six-hour interval. It also remembers the totals from the seven preceding six-hour intervals. It sums the totals from the seven preceding intervals and the current interval, to obtain the total number of SysB transitions occurring during a 42-to-48-hour period.

The monitored components are divided into groups and for each group there are minor and major threshold values. The minor and major thresholds are for

a 42-to-48-hour period. If a component's total number of SysB transitions for the 42-to-48-hour period equals or exceeds the minor threshold for its component group, and if a SysBTh minor or major alarm is not already in effect, the system raises a SysBTh minor alarm (unless the alarm has been disabled). If a component's total number of SysB transitions for the 42-to-48-hour period equals or exceeds the major threshold for its component group, and if a SysBTh major alarm is not already in effect, the system raises a SysBTh major alarm (unless the alarm has been disabled). For information on the component groups, see the description of the "Query" parameter, below. For information on the SysBTh minor and major alarms and for information on disabling alarms, see the *XA-Core Maintenance Manual*, 297-8991-510.

Menu selection number

15

Type

Informational

Parameters

The Cntrs_ command requires either the <query> parameter or the <reset> parameter.

If you use the <query> parameter, no other parameters are permitted.

If you use the <reset> parameter, you must use additional parameters to specify a component: The <nn> and <s> parameters are required in all CNTRS RESET commands. The <p> parameter is required in some CNTRS RESET commands. The <device> parameter is required in some CNTRS RESET commands.

Query

The <query> parameter instructs the XA-Core system to display the following information.

- Either the value of all system-busy (SysB) transition counters that are greater than zero, or the message: `No SysB transitions on any components in the last 42-48 hrs.` A SysB transition counter counts the number of times that a component goes from the in-service state to the SysB state. For a list of the components for which the system maintains SysB transition counters, see the beginning of this "Cntrs_" section. The system maintains a separate SysB transition counter for each instance of each listed component, for example, for each TOD device. For each component, the system counts the SysB transitions that occur during the current six-hour interval. It also maintains a record of the totals from the seven preceding six-hour intervals. It sums the totals from the seven

Shared Memory (SM) MAP level (continued)

preceding intervals and the current interval, to obtain the total number of SysB transitions occurring during a 42-to-48-hour period.

- The values of the minor and major thresholds for each component group. (Component groups are described below.) The thresholds are shown in an output line that resembles the following:

  SysBTh thresholds: (Min/Maj): PE=2/6; SM=2/4; IOhw=2/6; IOlk=2/8

  Note: The threshold values shown in the example are for illustrative purposes only. If the values shown in the example differ from the output of the CNTRS QUERY command, you should regard the command output as correct.

  For each component group, a slash separates the minor and major threshold values. For example, “SM=2/4” means that the minor threshold for the SM group is 2, and the major threshold is 4.

  The minor and major thresholds are for a 42-to-48-hour period. If a component’s total number of SysB transitions for the 42-to-48-hour period equals or exceeds the minor threshold for that group, and if a SysBTh minor or major alarm is not already in effect, the system raises a SysBTh minor alarm (unless the alarm has been disabled). If a component’s total number of SysB transitions for the 42-to-48-hour period equals or exceeds the major threshold for that group, and if a SysBTh major alarm is not already in effect, the system raises a SysBTh major alarm (unless the alarm has been disabled). For information on the SysBTh minor and major alarms and for information on disabling alarms, see the *XA-Core Maintenance Manual*, 297-8991-510.

  The component groups are as follows.

  — The PE group includes PE circuit packs.

  — The SM group includes SM circuit packs.

  — The IO link (IOlk) group includes IO links.

  — The IO hardware (IOhw) group includes IOP, HIOP, and HCMIC circuit packs, all packlets, sections of HIOP circuit packs that are supporting ETHR and AMDI connections, sections of HCMIC circuit packs that are supporting RTIF, ETHR, and CMIC connections, time-of-day (TOD) devices, and ports.

Reset

The <reset> parameter instructs the system to reset to zero the value of the system-busy (SysB) transition counters for a specific component. The parameters following the <reset> parameter specify the component.

Use the <reset> parameter with the <nn> and <s> shelf location parameters for a circuit pack or with the <nn>, <s>, and <p> shelf location parameters for a packlet. With the <reset> parameter, use the <device> parameter to identify a port or a link or a time-of-day device (TOD).

Note 1: Ordinarily, you should use the <reset> parameter only for links. Use it after you have corrected a link fault, to reset the SysB transition counters for the link.

Note 2: Ordinarily, for all components other than links, you should let the system reset the counters automatically. The system resets a component's counters automatically when you replace the component. Alternatively, if the SysB transitions stop occurring, the counters will revert to zero after seven six-hour intervals. At the beginning of each six-hour interval, the system starts a six-hour transition counter at zero and it adjusts the 42-to-48-hour total to reflect the seven preceding six-hour intervals. If the component goes through seven consecutive six-hour intervals without a SysB transition, all the counters revert to zero.

nn

Use the <nn> (slot number) parameter value to indicate the number of the physical shelf slot where a CP or packlet is located - 1 to 18. The component could be the CP or packlet, or it could be a device on the CP or packlet. The <nn> parameter is required in all cases.

s

Use the <s> (side) parameter value to indicate the location in the physical shelf of a CP or packlet - front (f) or rear (r). The component could be the CP or packlet, or it could be a device on the CP or packlet. The <s> parameter is required in all cases.

p

Use the <p> (position) parameter value to indicate the packlet location in an input/output processor (IOP) - upper (u) or lower (l). The <p> parameter is required if the component is a packlet or a device on a packlet.

Device

Use the <device> parameter if the component is a link, a port, or a TOD device.

Options

There are no command options.

Command format examples

Example use of the Cntrs_ command is shown in Table "Cntrs_ command examples". The Cntrs_ command syntax is shown in the example below.

Shared Memory (SM) MAP level (continued)

COMMAND <parameter>

Cntrs_ command examples

Command example	Command description
>Cntrs query	CNTRS QUERY: Display the values of all non-zero SysB transition counters, and display the minor and major threshold values.
>Cntrs reset 14 r	CNTRS RESET <nn> <s>: Reset the SysB transition counter for the circuit pack in slot 14R (an IOP or HIOP circuit pack).
>Cntrs reset 15 r u	CNTRS RESET <nn> <s> <p>: Reset the SysB transition counter for the packlet in slot 15R, upper (a CMIC packlet).
>Cntrs reset 6 r u link	CNTRS RESET <nn> <s> <p> <device>: Reset the SysB transition counter for the link on the ethernet packlet in slot 6R, upper.
>Cntrs reset 4 r l port0	CNTRS RESET <nn> <s> <p> <device>: Reset the SysB transition counter for port0 (the local port) on the RTIF packlet in slot 4R, lower.
>Cntrs reset 13 r l link0	CNTRS RESET <nn> <s> <p> <device>: Reset the SysB transition counter for link0 on the AMDI packlet in slot 13R, lower.
>Cntrs reset 14 r link1	CNTRS RESET <nn> <s> <device>: Reset the SysB transition counter for link1 on the AMDI section of the HIOP circuit pack in slot 14R.
>Cntrs reset 15 r tod0	CNTRS RESET <nn> <s> <device>: Reset the SysB transition counter for the tod0 time-of-day device on the CMIC section of the HCMIC circuit pack in slot 15R.

Disk

The Disk command is a non-menu command. The Disk command instructs the XA-Core system to display the Disk MAP level.

Menu selection number

The SM MAP level does not display a Disk menu number.

Type

Navigational

Parameters

There are no command parameters.

Options

There are no command options.

Command format examples

Example use of the Disk command is shown in Table "Disk command examples". The Disk command syntax is shown in the example below:

COMMAND

Disk command examples

Command example	Command description
>DISK	Exit from current MAP session and display the Disk MAP level

ETHR

The ETHR command is a non-menu command. The ETHR command instructs the XA-Core system to display the ETHR MAP level.

Menu selection number

The SM MAP level does not display an ETHR menu number.

Type

Navigational

Parameters

There are no command parameters.

Options

There are no command options.

Command format examples

Example use of the ETHR command is shown in Table "ETHR command examples". The ETHR command syntax is shown in the example below:

Shared Memory (SM) MAP level (continued)

COMMAND

ETHR command examples

Command example	Command description
>ETHR	Exit from the current MAP session and display the ETHR MAP level.

Indicat_

The Indicat_ command is a common command. The command causes LEDs on CPs or packlets to wink or illuminate. The command allows you to locate a device on the physical shelf or to make sure all LEDs work. CPs and packlets must be in a ManB state before you use the Indicat_ card command.

> ***Note:*** If you use the Indicat_ command with the <test> or <testall> parameters, CPs and packlets do not have to be in a ManB state.

Menu selection number

17

Type

Informational

Parameters

The Indicat_ command requires parameters. If you do not enter any parameters or you enter invalid parameters, the MAP terminal displays an error message. The MAP terminal prompts you to enter a correct parameter value.

The Indicat_ command requires at least two of the shelf location parameters. In addition to the shelf location parameters, you can enter one of the following parameters:

Card

Use the <card> parameter to cause the red triangular LED of a SysB (system busy) or ManB CP or packlet to wink. You can use the [timer] option with the <card> parameter.

Clear

Use the <clear> parameter to return LEDs to a normal working state on a single winking or testing CP or packlet. Use the <clear> parameter with the shelf location parameters.

Shared Memory (SM) MAP level (continued)

Clearall

Use the <clearall> parameter to return all winking or testing LEDs on all CPs or packlets to a normal working state.

Test

Use the <test> parameter to light the red LED on a single CP or packlet. The CP or packlet does not have to be in a ManB state. LEDs already winking on other CPs or packlets continue to wink. Use the <test> parameter with the shelf location parameters. You can use the <test> parameter with the [timer] option.

Testall

Use the <testall> parameter to light all LEDs on all CPs and packlets. The CPs and packlets do not have to be in a ManB state. LEDs already winking on other CPs or packlets continue to wink. You can use the <testall> parameter with the [timer] option. Do not use the shelf location parameters with the <testall> parameter.

nn

Use the <nn> (slot number) parameter value to indicate the number of the physical shelf slot - 1 to 18.

s

Use the <s> (side) parameter value to indicate the CP or packlet location in the physical shelf - front (f) or rear (r).

p

Use the <p> (position) parameter value to indicate the packlet location in an input/output processor (IOP) - upper (u) or lower (l).

Options

You can enter the following option in the command statement:

Timer

Use the [timer] option to indicate the time (in minutes) to light or wink LEDs. The XA-Core system turns the LEDs off when the time expires. The minimum time period is 1 min. The maximum time period is 999 min. If you do not define a time period, the default time period is 120 min.

Shared Memory (SM) MAP level (continued)

Use the [timer] option as follows:

- use the [timer] option with the <card> parameter to wink a red LED on a single CP or packlet for a period of time.
- use the [timer] option with the <test> parameter to light the red LED on a CP or packlet for a period of time.
- use the [timer] option with the <testall> parameter to light the red LED on all CPs and packlets for a period of time.

Command format examples

Example use of the Indicat_ command is shown in Table "Indicat_ command examples". The Indicat_ command syntax is shown in the example below:

COMMAND <parameter> [option]

Indicat_ command examples (Sheet 1 of 2)

Command example	Command description
>INDICAT card 4 r u	INDICAT <card> <nn> <s> <p>: Wink red LED on a single ManB packlet.
>INDICAT card 4 r u 5	INDICAT <card> <nn> <s> <p> [timer]: Wink red LED on a single ManB packlet for 5 min.
>INDICAT clear 4 r u	INDICAT <clear> <nn> <s> <p>: Return LEDs on a single packlet to a normal working state.
>INDICAT clearall	INDICAT <clearall>: Return all LEDs on all CPs and packlets to a normal working state.
>INDICAT test 4 r 5	INDICAT <test> <nn> <s> [timer]: Light all LEDs on a single CP for 5 min. If the command does not include the [timer] option, the XA-Core default time value is 120 min.
>INDICAT testall 5	INDICAT <testall> [timer]: Light all LEDs on all CPs and packlets for 5 min. The amber LEDs on the shelf interface modules (SIM) CPs do not light. The <test> parameter does not cause an audible alarm nor alarm notification on the MAP terminal. CPs or packlets now under test continue to wink

Indicat_ command examples (Sheet 2 of 2)

Command example	Command description
>INDICAT testall	INDICAT <testall>: Light all LEDs on all CPs and packlets for 120 min.

IO

The IO command is a non-menu command. The IO command instructs the XA-Core system to display the IO MAP level.

Menu selection number

The SM MAP level does not display an IO menu number.

Type

Navigational

Parameters

There are no command parameters.

Options

There are no command options.

Command format examples

Example use of the IO command is shown in Table "IO command example". The IO command syntax is shown in the example below:

COMMAND

IO command example

Command example	Command description
>IO	Exit from the current MAP session and display the IO MAP level.

PE

The PE command is a non-menu command. The PE command instructs the XA-Core system to display the XA-Core processor element (PE) MAP level.

Menu selection number

The SM MAP level does not display a PE menu number.

Shared Memory (SM) MAP level (continued)

Type

Navigational

Parameters

There are no command parameters.

Options

There are no command options.

Command format examples

Example use of the PE command is shown in Table "PE command example". The PE command syntax is shown in the example below:

COMMAND

PE command example

Command example	Command description
>PE	Exit from the current MAP session and display the PE MAP level.

Query_

The Query_ command is a common command. The Query_ command causes the MAP terminal to display the following information for a single CP:

- the product engineering code (PEC)
- the hardware release
- the baseline hardware release (as specified in table PECINV)
- whether the hardware is compatible with the baseline and exception specifications (specifications found in table PECINV)
- the serial number

The parameters determine the type of information displayed.

Menu selection number

18

Type

Informational

Parameters

The Query_ command requires command parameters. If you do not enter any parameters or you enter invalid parameters, the MAP terminal displays an error message. The MAP terminal prompts you to enter a correct parameter value.

If you use the Query_ command with the <card> parameter, enter the shelf location parameters. If you use the Query_ command with the <type> parameter or with the <shelf> parameter, do not enter the shelf location parameters.

Card

Use the <card> parameter to instruct the XA-Core system to perform a query on a CP or packlet. Display the description to the MAP terminal. You must use the <card> parameter with the CP or packlet shelf location parameters.

nn

Use the <nn> (slot number) parameter value to indicate the number of the physical shelf slot - 1 to 18.

s

Use the <s> (side) parameter value to indicate the CP or packlet location in the physical shelf - front (f) or rear (r).

p

Use the <p> (position) parameter value to indicate the packlet location in an input/output processor (IOP) - upper (u) or lower (l).

Shelf

Use the <shelf> parameter to instruct the XA-Core system to retrieve information about all the components installed in the shelf. The <shelf> parameter retrieves the information you would obtain by entering the Query card command for every circuit pack and packlet in the XA-Core.

Subsystem_name

Use the <subsystem_name> parameter to indicate the name of a subsystem. The value of the subsystem name is either SM, PE, or IO. Use the <subsystem_name> parameter only with the <type> parameter.

Type

Use the <type> parameter to indicate that the query applies to a subsystem of type SM, PE, or IO. Use the <type> parameter with the <subsystem name> parameter. The MAP terminal displays the location of all CPs that match the subsystem type. Do not enter shelf location parameters.

Shared Memory (SM) MAP level (continued)

Options

There are no command options.

Command format examples

Example use of the Query_ command is shown in Table "Query_ command examples". The Query_ command syntax is shown in the example below:

COMMAND <parameter>

Query_ command examples

Command example	Command description
>QUERY card 4 r	QUERY <card> <nn> <s>: Display the PEC, serial number, insertion/activation dates software load, firmware version and working state for the CP.
>QUERY card 7 r u	QUERY <card> <nn> <s> <p>: Display the PEC, serial number, insertion/ activation dates, software load, firmware version and working state for the packlet.
>QUERY shelf	QUERY <shelf>: Display the PEC, serial number, insertion/activation dates, software load, firmware version, and working state for every CP and packlet in the shelf.
>QUERY type io	QUERY <type> <subsystem_name>: Display subsystem name and location of all CPs and packlets that match the subsystem type.

Quit

The Quit command is a common command. The Quit command instructs the XA-Core system to exit from the current MAP session. You can exit to any MAP level that is higher in the MAP level hierarchy.

Note: The XA-Core system continues to execute any previous commands entered.

Menu selection number

0

Shared Memory (SM) MAP level (continued)

Type

Navigational

Parameters

The Quit command parameters are optional.

All

Use the <all> parameter to terminate all XA-Core MAP sessions and display the CI prompt.

Incrname

Use the <incrname> parameter to end the current MAP session and display a MAP level higher in the MAP system hierarchy. Enter a MAP level name. The XA-Core system displays the MAP level that is one level higher in the MAP system hierarchy than the <incrname> (increment name) value.

Nlevel

Use the <nlevel> parameter to end the current MAP session and display a MAP level higher in the MAP system hierarchy. Enter a number value to represent the number of DMS MAP levels to step-back in the MAP system hierarchy.

Options

There are no command options.

Command format examples

Example use of the Quit command is shown in Table "Quit command examples". The Quit command syntax is shown in the example below:

COMMAND <parameter>

Quit command examples (Sheet 1 of 2)

Command example	Command description
>QUIT	Use the Quit command with no parameters to exit from the current MAP session. Display a MAP level that is one level above the current MAP session level.
>QUIT mtc	QUIT <incrname>: Exit the current MAP session. Display the MAP level that is one level above the indicated MAP level name.

Shared Memory (SM) MAP level (continued)

Quit command examples (Sheet 2 of 2)

Command example	Command description
>QUIT 2	QUIT <nlevel>: Exit the current MAP session. Display the MAP level that is two levels above the current MAP session in the MAP hierarchy.
>QUIT all	QUIT <all>: Exit from all MAP sessions and display the CI prompt.

RTIF

The RTIF command is a non-menu command. The RTIF command instructs the XA-Core system to display the reset terminal interface (RTIF) MAP level.

Menu selection number

The SM MAP level does not display an RTIF menu number.

Type

Navigational

Parameters

There are no command parameters.

Options

There are no command options

Command format examples

Example use of the RTIF command is shown in Table "RTIF command example". The RTIF command syntax is shown in the example below:

COMMAND

RTIF command example

Command example	Command description
>RTIF	Exit from the current MAP session and display the RTIF MAP level.

RTS_

The RTS_ command instructs the XA-Core system to test, synchronize memory addresses and return an SM CP to service.

Menu selection number

8

Type

Operational

Parameters

The RTS_ command requires parameters. If you do not enter any parameters or you enter invalid parameters, the MAP terminal displays an error message. The MAP terminal prompts you to enter a correct parameter value.

The RTS_ command requires the following parameters:

nn

Use the <nn> (slot number) parameter value to indicate the number of the physical shelf slot - 1 to 18.

s

Use the <s> (side) parameter value to indicate the packlet location in the physical shelf - front (f) or rear (r).

Options

You can enter the following command option in the command statement:

Nowait

Use the [nowait] option to allow you to enter other system commands while the XA-Core system performs the return to service task.

Command format examples

Example use of the RTS command is shown in Table "RTS command examples". The RTS command syntax is shown in the example below:

COMMAND <parameter> [option]

RTS command examples

Command example	Command description
>RTS 7 r	RTS <nn> <s>: Test and return the ManB SM CP to service.
>RTS 7 r nowait	RTS <nn> <s> [nowait]: Test and return the ManB SM CP to service. Continue with other work while the system executes the RTS.

Shared Memory (SM) MAP level (continued)

Tape

The Tape command is a non-menu command. The Tape command instructs the XA-Core system to display the XA-Core Tape MAP level.

Menu selection number

The SM MAP does not display a Tape menu number.

Type

Navigational

Parameters

There are no command parameters.

Options

There are no command options.

Command format examples

Example use of the Tape command is shown in Table "Tape command example". The Tape command syntax is shown in the example below:

COMMAND

Tape command example

Command example	Command description
>TAPE	Exit from the current MAP session and display the Tape MAP level.

Trnsl_

The Trnsl_ (translate) command instructs the XA-Core system to display the relationship between SM CP slot numbers and memory module addresses. The MAP displays the module number and starting address for the indicated SM CP.

Menu selection number

16

Type

Informational

Parameters

The Trnsl_ command requires parameters. If you do not enter any parameters or you enter invalid parameters, the MAP terminal displays an error message. The MAP terminal prompts you to enter a correct parameter value.

The Trnsl_ command requires the following parameters:

nn

Use the <nn> (slot number) parameter value to indicate the number of the physical shelf slot - 1 to 18.

s

Use the <s> (side) parameter value to indicate the CP location in the physical shelf - front (f) or rear (r).

Options

There are no command options.

Command format examples

Example use of the Trnsl_ command is shown in Table "Trnsl_ command example". The Trnsl_ command syntax is shown in the example below:

COMMAND <parameter>

Trnsl_ command example

Command example	Command description
>TRNSL 7 r	TRNSL <nn> <s>: Display the SM cp memory information

Tst_

The Tst_ (Test) command instructs the XA-Core system to perform tests on the SM CP. The type of test performed depends on the working state (in-service or out-of-service) of the SM CP.

An in-service test performs non-destructive tests. An out-of-service test performs a memory match to check that SM memory modules can be synchronized.

Menu selection number

6

Shared Memory (SM) MAP level (continued)

Type

Operational

Parameters

The Tst_ command requires parameters. If you do not enter any parameters or you enter invalid parameters, the MAP terminal displays an error message. The MAP terminal prompts you to enter a correct parameter value.

The Tst_ command requires the following command parameters.

nn

Use the <nn> (slot number) parameter value to indicate the number of the physical shelf slot - 1 to 18.

s

Use the <s> (side) parameter value to indicate the CP location in the physical shelf - front (f) or rear (r).

Options

You can enter the following command option in the command statement:

Nowait

Use the [nowait] option to display a MAP prompt and allow you to enter other commands while the system test is executing.

Command format examples

Example use of the Tst_ command is shown in Table "Tst_ command examples". The Tst_ command syntax is shown in the example below:

COMMAND <parameter> [option]

Tst_ command examples

Command example	Command description
>TST 7 r	TST <nn> <s>: Perform a test on the SM CP.
>TST 7 r nowait	TST <nn> <s> [nowait]: Perform a test on the SM CP. Display the MAP prompt and continue with other MAP tasks.

Uneq

Menu selection number

12

Shared Memory (SM) MAP level (continued)

Type

Operational

Description

Use the uneq command to unequip a slot.

Release history

BASE14

Feature 59009527 (XA-4000: XA-Core Provisioning) introduces command uneq.

Limitations and restrictions

Remove the card from the slot before entering the uneq command.

Syntax

The uneq command syntax is as follows:

```
UNEQ Parms:[<slot>]
```

The following table describes the parameters and variables of the uneq command.

Command parameter and variable descriptions

Parameters and variables	Value	Description
slot	numeric	Enter the slot number to deprovision.

Example

The following table provides an example of the uneq command.

Command example

Command:	**>** uneq 5 front
Description of task:	Unequip the slot 5 front.
MAP response:	command submitted Uneq 5 Front completed
Explanation:	This response indicates that the uneq command is successful and the component is deprovisioned.

Shared Memory (SM) MAP level (continued)

Responses

The following table explains possible responses to the command.

MAP responses with associated meanings and actions

Command:	**>**uneq 5 front
MAP response:	command submitted Uneq 5 Front completed
Meaning:	This response indicates that the uneq command is successful and the component is deprovisioned.
Actions:	None.
Command:	**>**uneq 5 front
MAP response:	Hardware part of basic inventory, no action taken.
Meaning:	This response indicates that uneq command was rejected because it compromised redundancy.
Actions:	Do not issue the uneq command.
Command:	**>**uneq 5 front
MAP response:	Improper state for required action, no action taken.
Meaning:	This response indicates that card is not manbusy.
Actions:	Manbusy the card, remove it from the shelf and reissue the command.

XACMtc

The XACMtc command is a non-menu command. The XACMtc command instructs the XA-Core system to display the XA-Core maintenance (XACMtc) MAP level.

Menu selection number

The SM MAP level does not display an XACMtc menu number.

Type

Navigational

Parameters

There are no command parameters.

Options

There are no command options.

Shared Memory (SM) MAP level (end)

Command format examples

Example use of the XACMtc command is shown in Table "XACMtc command example". The XACMtc command syntax is shown in the example below:

COMMAND

XACMtc command example

Command example	Command description
>XACMTC	Exit from the current MAP session and display the XACMtc MAP level.

This page is left blank intentionally.

Processor Element (PE) MAP level

Introduction

Use the XA-Core PE MAP level to perform maintenance activities on the XA-Core PE circuit packs (CPs). Select the PE option from the main XAC MAP to display the XA-Core PE MAP level.

PE MAP level

The PE MAP level is an interface that allows you to monitor and perform system maintenance activities on the processor element subsystems.

PE MAP level

```
 XAC      MS      IOD     Net      PM      CCS     Lns     Trks     Ext     APPL
  .       .        .       .       .        .       .       .        .       .

PE                 Front:   111111111  Rear: 111111   SM     PE      IO     PKLT
 0 Quit            123456789012345678  456789012345   .      PEfl    .      .
 2            Sta: -.-..-..-..-..-..-  .--.--------.   0      0       0      0
 3            Dep:
 4            Typ:    **        *  *
 5             PE:
 6 Tst_
 7 Bsy_
 8 RTS_
 9
10 LoadFW_
11
12 Uneq_
13
14 Alarm_
15 Cntrs_
16 Trnsl_
17 Indicat_
18 Query_
 XMAP0
Time  14:12   >
```

PE menu commands

Menu commands appear on the MAP command menu. Non-menu commands do not appear on the MAP menu list. Enter both menu and non-menu commands in the command interpreter input area. You can enter either the command name or the menu number that matches the command.

Processor Element (PE) MAP level (continued)

Table "Summary of PE MAP level menu commands" contains a summary description of PE MAP level commands.

Summary of PE MAP level menu commands

Command	Menu #	Type	Function
Alarm	14	Op/Info	Enable, disable or query alarm notifications
AMDI	Non-menu	Nav	Display the AMDI MAP level
Bsy	7	Op	Place a PE CP in a ManB state
CMIC	Non-menu	Nav	Display the CMIC MAP level
Cntrs_	15	Info	Display all non-zero system-busy (SysB) transition counters, or reset the SysB transition counters for a specified component
Disk	Non-menu	Nav	Display the Disk MAP level
ETHR	Non-menu	Nav	Display the ETHR MAP level
Indicat_	17	Info	Cause a CP or packlet LED to wink or clear
IO	Non-menu	Nav	Display the IO MAP level
LoadFW_	10	Op	Use the LoadFW command to load firmware (FW) on a card without removing the card or packlet from the shelf.
Query	18	Info	List information for any CP or packlet
Quit	0	Nav	Exit from the current MAP level
RTIF	Non-menu	Nav	Display the RTIF MAP level
RTS_	8	Op	Test and return a PE CP to service
SM	Non-menu	Nav	Display the SM MAP level
Tape	Non-menu	Nav	Display the Tape MAP level
Trnsl_	16	Op	Provide memory address ranges and amount of spare, faulty and unconfigured memory on a specified PE CP
Tst_	6	Op	Perform a test on a PE CP
Uneq	12	Info	Unequip a slot.
XACMtc	Non-menu	Nav	Display the XACMtc MAP level

Alarm_

The Alarm_ command is a common menu command. The Alarm_ command allows you to perform the following tasks:

- permit notification for selected alarms
- disable notification for selected alarms
- query the XA-Core system to identify alarm conditions or examine the status of alarms

Menu selection number

14

Type

Operational or Informational

Parameters

The Alarm_ command requires command parameters. If you do not enter any parameters or you enter invalid parameters, the MAP terminal prompts you to enter a correct parameter value. The Alarm_ command requires at least one of the following command parameters:

Alarm_name

Use the <alarm_name> parameter to indicate the name of the XA-Core system alarm. You can use the <alarm_name> parameter with the <disable> and <enable> parameters.

All

Use the <all> parameter to enable or disable notification for all alarms (use with the <enable> or <disable> parameter.

Disable

Use the <disable> parameter to prevent the XA-Core system from displaying alarm notification messages on the MAP screen. You can disable either one alarm at a time or all alarms. Use the <disable> parameter with the Alarm_ command and <alarm_name> parameter to disable a single alarm. Use the <disable> parameter with the <all> parameter to disable all XA-Core alarms. The <disable> parameter remains active until you enable the alarm or the system performs a restart.

Enable

Use the <enable> parameter to instruct the XA-Core system to display an alarm notification message on the MAP terminal. You can enable either one alarm or all alarms. Use the <enable> parameter together with the Alarm_

Processor Element (PE) MAP level (continued)

command and <alarm_name> parameter to enable a single alarm. Use the <enable> parameter with the <all> parameter to enable all XA-Core alarms.

Raised

Use the <raised> parameter to display all active alarms, the alarm severity and enabled/disabled status. You can use the <raised> parameter with the [enabled] or [disabled] options. If you do not enter any options, the XA-Core system MAP displays all active, enabled and disabled alarms.

Options

You can enter one of the following command options in the command statement:

Disabled

Use the [disabled] option with the <raised> parameter. The option instructs the XA-Core system to display all active alarms that have a disabled status.

Enabled

Use the [enabled] option with the <raised> parameter. The option instructs the XA-Core system to display all active alarms that have an enabled status.

Command format examples

Example use of the Alarm_ command is shown in Table "Alarm_ command examples". The Alarm_ command syntax is shown in the example below:

COMMAND <parameter> [option]

Alarm_ command examples (Sheet 1 of 2)

Command example	Command description
>ALARM tape	ALARM <alarm_name>: Display the alarm severity and status for a single alarm.
>ALARM all	ALARM <all>: Display the alarm severity and status for all alarms.
>ALARM all disable	ALARM <all> <disable>: Disable notification for all alarms.
>ALARM tape disable	ALARM <alarm_name> <disable>: Disable notification for a single alarm.
>ALARM all enable	ALARM <all> <enable>: Enable notification for all alarms.

Processor Element (PE) MAP level (continued)

Alarm_ command examples (Sheet 2 of 2)

Command example	Command description
>ALARM tape enable	ALARM <alarm_name> <enable>: Enable notification for a single alarm.
>ALARM raised	ALARM <raised>: Display all active alarms
>ALARM raised enabled	ALARM <raised> [enabled]: Display active alarms that have an enabled status
>ALARM raised disabled	ALARM <raised> [disabled]: Display active alarms that have a disabled status

AMDI

The AMDI command is a non-menu command. The AMDI command instructs the XA-Core system to display the AMDI MAP level.

Menu selection number

The PE MAP level does not display an AMDI menu number.

Type

Navigational

Parameters

There are no command parameters.

Options

There are no command options.

Command format examples

Example use of the AMDI command is shown in Table "AMDI command examples". The AMDI command syntax is shown in the example below:

COMMAND

AMDI command examples

Command example	Command description
>AMDI	Exit from the current MAP session and display the AMDI MAP level.

Processor Element (PE) MAP level (continued)

Bsy_

The Bsy_ (Busy) command is a MAP-related command. The Bsy_ command places an in-service (InSv), in-service trouble (IsTb) or SysB PE CP in a ManB state. The XA-Core system does not allow the last InSv PE CP to be put in a ManB state. The MAP terminal displays a warning and the system blocks the command if the XA-Core system determines that an error or outage can occur.

Menu selection number

7

Type

Operational

Parameters

The Bsy_ command requires command parameters. If you do not enter any parameters or you enter invalid parameters, the MAP terminal displays an error message. The MAP terminal prompts you to enter a correct parameter value. The Bsy_ command requires the following command parameters:

nn

Use the <nn> (slot number) parameter value to indicate the number of the physical shelf slot - 1 to 18.

s

Use the <s> (side) parameter value to indicate the CP location in the physical shelf - front (f) or rear (r).

Options

You can enter one of the following command options in the command statement:

Force

Use the [force] option to instruct the system to ignore a minor redundancy loss and continue to execute the command. The Force option fails if the XA-Core system detects that a total loss of redundancy is possible.

Noprompt

Use the [noprompt] option to bypass system prompts and continue to execute the command. Use the Noprompt option with caution. System messages and prompts help you to prevent a possible outage.

Command format examples

Example use of the Bsy_ command is shown in Table "Bsy_ command examples". The Bsy_ command syntax is shown in the example below:

COMMAND <parameter> [option]

Bsy_ command examples

Command use	Command description
>BSY 4 f	BSY <nn> <s>: Place the PC CP in a ManB state.
>BSY 4 f force	BSY <nn> <s> [force]: Place the PE CP in a ManB state if total loss of redundancy does not result.
>BSY 4 f noprompt	BSY <nn> <s> [noprompt]: Place the PE CP in a ManB state. Block warning/ prompt messages.

CMIC

The CMIC command is a non-menu command. The CMIC command instructs the XA-Core system to display the Core MS interconnect (CMIC) MAP level.

Menu selection number

The PE MAP level does not display a CMIC menu number.

Type

Navigational

Parameters

There are no command parameters.

Options

There are no command options.

Command format examples

Example use of the CMIC command is shown in Table "CMIC command examples". The CMIC command syntax is shown in the example below:

COMMAND

CMIC command examples

Command example	Command description
>CMIC	Exit from the current MAP session and display the CMIC MAP level.

Processor Element (PE) MAP level (continued)

Cntrs_

The Cntrs_ command instructs the XA-Core system to either display the current values of all non-zero system-busy (SysB) transition counters, or to reset to zero the SysB transition counters for a specified component. A SysB transition counter counts the number of times that a component's state changes from in-service to system-busy.

The system maintains separate SysB transition counters for each instance of each of the following components:

- IOP, HIOP, and HCMIC circuit packs
- all packlets: disk, tape, CMIC, RTIF, Ethernet, and AMDI
- sections of HIOP circuit packs that are supporting ETHR and AMDI connections
- sections of HCMIC circuit packs that are supporting CMIC, RTIF, and ETHR connections
- time-of-day (TOD) devices
- ports

For each component, the system counts the SysB transitions that occur during the current six-hour interval. It also remembers the totals from the seven preceding six-hour intervals. It sums the totals from the seven preceding intervals and the current interval, to obtain the total number of SysB transitions occurring during a 42-to-48-hour period.

The monitored components are divided into groups and for each group there are minor and major threshold values. The minor and major thresholds are for a 42-to-48-hour period. If a component's total number of SysB transitions for the 42-to-48-hour period equals or exceeds the minor threshold for its component group, and if a SysBTh minor or major alarm is not already in effect, the system raises a SysBTh minor alarm (unless the alarm has been disabled). If a component's total number of SysB transitions for the 42-to-48-hour period equals or exceeds the major threshold for its component group, and if a SysBTh major alarm is not already in effect, the system raises a SysBTh major alarm (unless the alarm has been disabled). For information on the component groups, see the description of the "Query" parameter, below. For information on the SysBTh minor and major alarms and for information on disabling alarms, see the *XA-Core Maintenance Manual*, 297-8991-510.

Menu selection number

15

Processor Element (PE) MAP level (continued)

Type

Informational

Parameters

The Cntrs_ command requires either the <query> parameter or the <reset> parameter.

If you use the <query> parameter, no other parameters are permitted.

If you use the <reset> parameter, you must use additional parameters to specify a component: The <nn> and <s> parameters are required in all CNTRS RESET commands. The <p> parameter is required in some CNTRS RESET commands. The <device> parameter is required in some CNTRS RESET commands.

Query

The <query> parameter instructs the XA-Core system to display the following information.

- Either the value of all system-busy (SysB) transition counters that are greater than zero, or the message: `No SysB transitions on any components in the last 42-48 hrs.` A SysB transition counter counts the number of times that a component goes from the in-service state to the SysB state. For a list of the components for which the system maintains SysB transition counters, see the beginning of this "Cntrs_" section. The system maintains a separate SysB transition counter for each instance of each listed component, for example, for each TOD device. For each component, the system counts the SysB transitions that occur during the current six-hour interval. It also maintains a record of the totals from the seven preceding six-hour intervals. It sums the totals from the seven preceding intervals and the current interval, to obtain the total number of SysB transitions occurring during a 42-to-48-hour period.
- The values of the minor and major thresholds for each component group. (Component groups are described below.) The thresholds are shown in an output line that resembles the following:

  SysBTh thresholds: (Min/Maj): PE=2/6; SM=2/4; IOhw=2/6; IOlk=2/8

  Note: The threshold values shown in the example are for illustrative purposes only. If the values shown in the example differ from the output of the CNTRS QUERY command, you should regard the command output as correct.

Processor Element (PE) MAP level (continued)

For each component group, a slash separates the minor and major threshold values. For example, “SM=2/4” means that the minor threshold for the SM group is 2, and the major threshold is 4.

The minor and major thresholds are for a 42-to-48-hour period. If a component’s total number of SysB transitions for the 42-to-48-hour period equals or exceeds the minor threshold for that group, and if a SysBTh minor or major alarm is not already in effect, the system raises a SysBTh minor alarm (unless the alarm has been disabled). If a component’s total number of SysB transitions for the 42-to-48-hour period equals or exceeds the major threshold for that group, and if a SysBTh major alarm is not already in effect, the system raises a SysBTh major alarm (unless the alarm has been disabled). For information on the SysBTh minor and major alarms and for information on disabling alarms, see the *XA-Core Maintenance Manual*, 297-8991-510.

The component groups are as follows.

— The PE group includes PE circuit packs.

— The SM group includes SM circuit packs.

— The IO link (IOlk) group includes IO links.

— The IO hardware (IOhw) group includes IOP, HIOP, and HCMIC circuit packs, all packlets, sections of HIOP circuit packs that are supporting ETHR and AMDI connections, sections of HCMIC circuit packs that are supporting RTIF, ETHR, and CMIC connections, time-of-day (TOD) devices, and ports.

Reset

The <reset> parameter instructs the system to reset to zero the value of the system-busy (SysB) transition counters for a specific component. The parameters following the <reset> parameter specify the component.

Use the <reset> parameter with the <nn> and <s> shelf location parameters for a circuit pack or with the <nn>, <s>, and <p> shelf location parameters for a packlet. With the <reset> parameter, use the <device> parameter to identify a port or a link or a time-of-day device (TOD).

Note 1: Ordinarily, you should use the <reset> parameter only for links. Use it after you have corrected a link fault, to reset the SysB transition counters for the link.

Note 2: Ordinarily, for all components other than links, you should let the system reset the counters automatically. The system resets a component’s counters automatically when you replace the component. Alternatively, if the SysB transitions stop occurring, the counters will revert to zero after seven six-hour intervals. At the beginning of each six-hour interval, the

system starts a six-hour transition counter at zero and it adjusts the 42-to-48-hour total to reflect the seven preceding six-hour intervals. If the component goes through seven consecutive six-hour intervals without a SysB transition, all the counters revert to zero.

nn

Use the <nn> (slot number) parameter value to indicate the number of the physical shelf slot where a CP or packlet is located - 1 to 18. The component could be the CP or packlet, or it could be a device on the CP or packlet. The <nn> parameter is required in all cases.

s

Use the <s> (side) parameter value to indicate the location in the physical shelf of a CP or packlet - front (f) or rear (r). The component could be the CP or packlet, or it could be a device on the CP or packlet. The <s> parameter is required in all cases.

p

Use the <p> (position) parameter value to indicate the packlet location in an input/output processor (IOP) - upper (u) or lower (l). The <p> parameter is required if the component is a packlet or a device on a packlet.

Device

Use the <device> parameter if the component is a link, a port, or a TOD device.

Options

There are no command options.

Command format examples

Example use of the Cntrs_ command is shown in Table "Cntrs_ command examples". The Cntrs_ command syntax is shown in the example below.

COMMAND <parameter>

Cntrs_ command examples (Sheet 1 of 2)

Command example	Command description
>Cntrs query	CNTRS QUERY: Display the values of all non-zero SysB transition counters, and display the minor and major threshold values.
>Cntrs reset 14 r	CNTRS RESET <nn> <s>: Reset the SysB transition counter for the circuit pack in slot 14R (an IOP or HIOP circuit pack).

Processor Element (PE) MAP level (continued)

Cntrs_ command examples (Sheet 2 of 2)

Command example	Command description
>Cntrs reset 15 r u	CNTRS RESET <nn> <s> <p>: Reset the SysB transition counter for the packlet in slot 15R, upper (a CMIC packlet).
>Cntrs reset 6 r u link	CNTRS RESET <nn> <s> <p> <device>: Reset the SysB transition counter for the link on the ethernet packlet in slot 6R, upper.
>Cntrs reset 4 r l port0	CNTRS RESET <nn> <s> <p> <device>: Reset the SysB transition counter for port0 (the local port) on the RTIF packlet in slot 4R, lower.
>Cntrs reset 13 r l link0	CNTRS RESET <nn> <s> <p> <device>: Reset the SysB transition counter for link0 on the AMDI packlet in slot 13R, lower.
>Cntrs reset 14 r link1	CNTRS RESET <nn> <s> <device>: Reset the SysB transition counter for link1 on the AMDI section of the HIOP circuit pack in slot 14R.
>Cntrs reset 15 r tod0	CNTRS RESET <nn> <s> <device>: Reset the SysB transition counter for the tod0 time-of-day device on the CMIC section of the HCMIC circuit pack in slot 15R.

Disk

The Disk command is a non-menu command. The Disk command instructs the XA-Core system to display the Disk MAP level.

Menu selection number

The PE MAP level does not display a Disk menu number.

Type

Navigational

Parameters

There are no command parameters.

Options

There are no command options.

Processor Element (PE) MAP level (continued)

Command format examples

Example use of the Disk command is shown in Table "Disk command examples". The Disk command syntax is shown in the example below:

COMMAND

Disk command examples

Command example	Command description
>DISK	Exit from current MAP session and display the Disk MAP level

ETHR

The ETHR command is a non-menu command. The ETHR command instructs the XA-Core system to display the Ethernet (ETHR) MAP level.

Menu selection number

The PE MAP level does not display an ETHR menu number.

Type

Navigational

Parameters

There are no command parameters.

Options

There are no command options.

Command format examples

Example use of the ETHR command is shown in Table "ETHR command examples". The ETHR command syntax is shown in the example below:

COMMAND

ETHR command examples

Command example	Command description
>ETHR	Exit from the current MAP session and display the ETHR MAP level.

Processor Element (PE) MAP level (continued)

Indicat_

The Indicat_ command is a common command. The command causes LEDs on CPs or packlets to wink or illuminate. The command allows you to locate a device on the physical shelf or to make sure all LEDs work. CPs and packlets must be in a ManB state before you use the Indicat_ card command.

> ***Note:*** If you use the Indicat_ command with the <test> or <testall> parameters, CPs and packlets do not have to be in a ManB state.

Menu selection number

17

Type

Informational

Parameters

The Indicat_ command requires parameters. If you do not enter any parameters or you enter invalid parameters, the MAP terminal displays an error message. The MAP terminal prompts you to enter a correct parameter value.

The Indicat_ command requires at least two of the shelf location parameters. In addition to the shelf location parameters, you can enter one of the following parameters:

Card

Use the <card> parameter to cause the red triangular LED of a SysB (system busy) or ManB CP or packlet to wink. You can use the [timer] option with the <card> parameter.

Clear

Use the <clear> parameter to return LEDs to a normal working state on a single winking or testing CP or packlet. Use the <clear> parameter with the shelf location parameters.

Clearall

Use the <clearall> parameter to return all winking or testing LEDs on all CPs or packlets to a normal working state.

Test

Use the <test> parameter to light the red LED on a single CP or packlet. The CP or packlet does not have to be in a ManB state. LEDs already winking on other CPs or packlets continue to wink. Use the <test> parameter with the shelf location parameters. You can use the <test> parameter with the [timer] option.

Processor Element (PE) MAP level (continued)

Testall

Use the <testall> parameter to light all LEDs on all CPs and packlets. The CPs and packlets do not have to be in a ManB state. LEDs already winking on other CPs or packlets continue to wink. You can use the <testall> parameter with the [timer] option. Do not use the shelf location parameters with the <testall> parameter.

nn

Use the <nn> (slot number) parameter value to indicate the number of the physical shelf slot - 1 to 18.

s

Use the <s> (side) parameter value to indicate the CP or packlet location in the physical shelf - front (f) or rear (r).

p

Use the <p> (position) parameter value to indicate the packlet location in an input/output processor (IOP) - upper (u) or lower (l).

Options

You can enter the following option in the command statement:

Timer

Use the [timer] option to indicate the time (in minutes) to light or wink LEDs. The XA-Core system turns the LEDs off when the time expires. The minimum time period is 1 min. The maximum time period is 999 min. If you do not define a time period, the default time period is 120 min.

Use the [timer] option as follows:

- use the [timer] option with the <card> parameter to wink a red LED on a single CP or packlet for a period of time.
- use the [timer] option with the <test> parameter to light the red LED on a CP or packlet for a period of time.
- use the [timer] option with the <testall> parameter to light the red LED on all CPs and packlets for a period of time.

Command format examples

Example use of the Indicat_ command is shown in Table "Indicat_ command examples". The Indicat_ command syntax is shown in the example below:

Processor Element (PE) MAP level (continued)

COMMAND <parameter> [option]

Indicat_ command examples

Command example	Command description
>INDICAT card 4 r u	INDICAT <card> <nn> <s> <p>: Wink red LED on a single ManB packlet.
>INDICAT card 4 r u 5	INDICAT <card> <nn> <s> <p> [timer]: Wink red LED on a single ManB packlet for 5 min.
>INDICAT clear 4 r u	INDICAT <clear> <nn> <s> <p>: Return LEDs on a single packlet to a normal working state.
>INDICAT clearall	INDICAT <clearall>: Return all LEDs on all CPs and packlets to a normal working state.
>INDICAT test 4 r 5	INDICAT <test> <nn> <s> [timer]: Light all LEDs on a single CP for 5 min. If the command does not include the [timer] option, the XA-Core default time value is 120 min.
>INDICAT testall 5	INDICAT <testall> [timer]: Light all LEDs on all CPs and packlets for 5 min. The amber LEDs on the shelf interface modules (SIM) CPs do not light. The <test> parameter does not cause an audible alarm nor alarm notification on the MAP terminal. CPs or packlets now under test continue to wink
>INDICAT testall	INDICAT <testall>: Light all LEDs on all CPs and packlets for 120 min.

IO

The IO command is a non-menu command. The IO command instructs the XA-Core system to display the IO MAP level.

Menu selection number

The PE MAP level does not display an IO menu number.

Type

Navigational

Parameters

There are no command parameters.

Options

There are no command options.

Command format examples

Example use of the IO command is shown in Table "IO command example". The IO command syntax is shown in the example below:

COMMAND

IO command example

Command example	Command description
>IO	Exit from the current MAP session and display the IO MAP level.

LoadFW_

Type

The LoadFW_ command is a menu listed command.

Target

The command target for the LoadFW_ command is XA-Core.

Description

Use the LoadFW_ command to load firmware (FW) on a card without removing the card or packlet from the shelf.

Load the firmware by downloading the load from a file or cloning the load from another card of the same type.

Release history

BAS14

LoadFW_ command is introduced in BAS14.

Processor Element (PE) MAP level (continued)

Syntax

The LoadFW_ command syntax is as follows:

```
LoadFW - Load FW onto a <card or packlet type> card.
Parms: <Slot number>   {1 TO 18}
       <Side of shelf> {FRONT, F, REAR, R}
   or  <Packlet position> {UPPER, U,LOWER, L}
       <Copy from FILE or another card>
              {FILE <which file>   {NEW, N, CURRENT, C}}

       [<Options> {NOWAIT}]
```

The following table describes the parameters and variables of the LoadFW_ command.

Command parameter and variable descriptions (Sheet 1 of 2)

Parameters and variables	Value	Description
Slot number	1 to 18	The slot number in the XA-Core shelf where the card is located.
Side of shelf	front, f, rear, r	The side of the shelf where the card is located. Front or f indicates the front side of the shelf where the card is located. Rear or r indicates the rear side of the shelf where the card is located.
Packlet position	upper, u, lower, l	The position of the packlet. Upper or u indicates the upper position where the packlet is located. Lower or l indicates the lower position where the packlet is located.
Copy from file	file	The file parameter indicates that the system copies the firmware load from this file.

Processor Element (PE) MAP level (continued)

Command parameter and variable descriptions (Sheet 2 of 2)

Parameters and variables	Value	Description
FILE <which file>	new, n, current, c	The volume and filename in the table XAFWLOAD. New or N indicates the system copies the new firmware load from a file. Current or c indicates the system copies the current firmware load from a file.
options	nowait	The nowait parameter directs the system to allow use of the MAP for other functions while the test is running.

Example

The following table provides an example of the LoadFW_ command.

Command example

Command:	**>loadfw 4 f file new**
Description of task:	The LoadFW command is issued

MAP response:	`Warning: LoadFW command will change FW.`
	
	`Proceed (Y or N)`
	
	`Noprompt option is NOT available.`

Explanation:	The warning response indicates a request for confirmation of the LoadFW command. Also, the noprompt option is not available.

Responses

The following table explains possible responses to the LoadFW_ command.

MAP responses with associated meanings and actions (Sheet 1 of 2)

Command:	**>loadfw 4 f file new**
MAP response:	`LoadFW 4 f failed`
Meaning:	The LoadFW_ command has failed or been rejected.
Reason:	The MAP displays the reason for the failure. (For a list of possible reasons, see the description of log XAC333 in the chapter, “Understanding XA-Core log reports”.) Record the reason.

Processor Element (PE) MAP level (continued)

MAP responses with associated meanings and actions (Sheet 2 of 2)

Action:	If major faults or the message NO VALID FW IN FLASH appears, load current firmware manually. For minor faults where the system recovers successfully, perform the actions listed on the MAP screen.
Command:	**>loadfw 4 rear file new**

MAP response:	`Command Submitted.`
	`LoadFW 4 Rear failed`
	`Reason: Table entry not found.`

Meaning:	The LoadFW_ command has failed or been rejected.
Reason:	The reason indicates table XAFWLOAD does not contain the file volume or name.
Action:	Correct the entry in table XAFWLOAD.
Command:	**>loadfw 4 rear file new**

MAP response:	`Command Submitted.`
	`LoadFW 4 Rear Lower failed`
	`Reason: Unknown file type.`

Meaning:	The LoadFW_ command has failed or been rejected.
Reason:	The reason indicates table XAFWLOAD contains the correct file volume and name but the file is not a firmware load.
Action:	Copy a file that contains the correct firmware load.

Query_

The Query_ command is a common command. The Query_ command causes the MAP terminal to display the following information for a single CP:

- the product engineering code (PEC)
- the hardware release
- the baseline hardware release (as specified in table PECINV)
- whether the hardware is compatible with the baseline and exception specifications (specifications found in table PECINV)
- the serial number
- the version of the current FW firmware load (the load that is in the circuit pack)
- the baseline FW firmware version (as specified in table FWINV)
- whether the current FW firmware load is compatible with the baseline and exception specifications (specifications found in table FWINV)

- the hardware/software vintage
- the full ROM version, that is, the full identification of the current FW firmware load (including the version code and any extensions)

The parameters determine the type of information displayed.

Menu selection number

18

Type

Informational

Parameters

The Query_ command requires command parameters. If you do not enter any parameters or you enter invalid parameters, the MAP terminal displays an error message. The MAP terminal prompts you to enter a correct parameter value.

If you use the Query_ command with the <card> parameter, enter the shelf location parameters. If you use the Query_ command with the <type> parameter or with the <shelf> parameter, do not enter the shelf location parameters.

Card

Use the <card> parameter to instruct the XA-Core system to perform a query on a CP or packlet. Display the description to the MAP terminal. You must use the <card> parameter with the CP or packlet shelf location parameters.

nn

Use the <nn> (slot number) parameter value to indicate the number of the physical shelf slot - 1 to 18.

s

Use the <s> (side) parameter value to indicate the CP or packlet location in the physical shelf - front (f) or rear (r).

p

Use the <p> (position) parameter value to indicate the packlet location in an input/output processor (IOP) - upper (u) or lower (l).

Shelf

Use the <shelf> parameter to instruct the XA-Core system to retrieve information about all the components installed in the shelf. The <shelf>

Processor Element (PE) MAP level (continued)

parameter retrieves the information you would obtain by entering the Query card command for every circuit pack and packlet in the XA-Core.

Subsystem_name

Use the <subsystem_name> parameter to indicate the name of a subsystem. The value of the subsystem name is either SM, PE, or IO. Use the <subsystem_name> parameter only with the <type> parameter.

Type

Use the <type> parameter to indicate that the query applies to a subsystem of type SM, PE, or IO. Use the <type> parameter with the <subsystem name> parameter. The MAP terminal displays the location of all CPs that match the subsystem type. Do not enter shelf location parameters.

Options

There are no command options.

Command format examples

Example use of the Query_ command is shown in Table "Query_ command examples". The Query_ command syntax is shown in the example below:

COMMAND <parameter>

Query_ command examples (Sheet 1 of 2)

Command example	Command description
>QUERY card 4 r	QUERY <card> <nn> <s>: Display the PEC, serial number, insertion/activation dates software load, firmware version and working state for the CP.
>QUERY card 7 r u	QUERY <card> <nn> <s> <p>: Display the PEC, serial number, insertion/activation dates, software load, firmware version and working state for the packlet.
>QUERY shelf	QUERY <shelf>: Display the PEC, serial number, insertion/activation dates, software load, firmware version, and working state for every CP and packlet in the shelf.

Processor Element (PE) MAP level (continued)

Query_ command examples (Sheet 2 of 2)

Command example	Command description
>QUERY type io	QUERY <type> <subsystem_name>: Display subsystem name and location of all CPs and packlets that match the subsystem type.

Quit

The Quit command is a common command. The Quit command instructs the XA-Core system to exit from the current MAP session. You can exit to any MAP level that is higher in the MAP level hierarchy.

Note: The XA-Core system continues to execute any previous commands entered.

Menu selection number

0

Type

Navigational

Parameters

The Quit command parameters are optional.

All

Use the <all> parameter to terminate all XA-Core MAP sessions and display the CI prompt.

Incrname

Use the <incrname> parameter to end the current MAP session and display a MAP level higher in the MAP system hierarchy. Enter a MAP level name. The XA-Core system displays the MAP level that is one level higher in the MAP system hierarchy than the <incrname> (increment name) value.

Nlevel

Use the <nlevel> parameter to end the current MAP session and display a MAP level higher in the MAP system hierarchy. Enter a number value to represent the number of DMS MAP levels to step-back in the MAP system hierarchy.

Options

There are no command options.

Processor Element (PE) MAP level (continued)

Command format examples

Example use of the Quit command is shown in Table "Quit command examples". The Quit command syntax is shown in the example below:

COMMAND <parameter>

Quit command examples

Command example	Command description
>QUIT	Use the Quit command with no parameters to exit from the current MAP session. Display a MAP level that is one level above the current MAP session level.
>QUIT mtc	QUIT <incrname>: Exit the current MAP session. Display the MAP level that is one level above the indicated MAP level name.
>QUIT 2	QUIT <nlevel>: Exit the current MAP session. Display the MAP level that is two levels above the current MAP session in the MAP hierarchy.
>QUIT all	QUIT <all>: Exit from all MAP sessions and display the CI prompt.

RTIF

The RTIF command is a non-menu command. The RTIF command instructs the XA-Core system to display the reset terminal interface (RTIF) MAP level.

Menu selection number

The PE MAP level does not display an RTIF menu number.

Type

Navigational

Parameters

There are no command parameters.

Options

There are no command options

Command format examples

Example use of the RTIF command is shown in Table "RTIF command example". The RTIF command syntax is shown in the example below:

COMMAND

RTIF command example

Command example	Command description
>RTIF	Exit from the current MAP session and display the RTIF MAP level.

RTS_

Use the RTS_ command instructs the XA-Core system to test and return a ManB PE CP to service.

Menu selection number

8

Type

Operational

Parameters

The RTS_ command requires parameters. If you do not enter any parameters or you enter invalid parameters, the MAP terminal displays an error message. The MAP terminal prompts you to enter a correct parameter value.

The RTS_ command requires the following parameters:

nn

Use the <nn> (slot number) parameter value to indicate the number of the physical shelf slot - 1 to 18.

s

Use the <s> (side) parameter value to indicate the CP location in the physical shelf - front (f) or rear (r).

Options

You can enter the following command option in the command statement:

Nowait

Use the [nowait] option to allow you to enter other system commands while the XA-Core system performs the return to service task.

Processor Element (PE) MAP level (continued)

Command format examples

Example use of the RTS command is shown in Table "RTS command examples". The RTS command syntax is shown in the example below:

COMMAND <parameter> [option]

RTS command examples

Command example	Command description
>RTS 4 f	RTS <nn> <s>: Test and return the ManB PE CP to service.
>RTS 4 f nowait	RTS <nn> <s> [nowait]: Test and return the ManB PE CP to service. Display the MAP prompt and continue with other MAP tasks.

Response

In response to an RTS command on a PE circuit pack, the following message can appear in the SubSystem Status Field: “Wrong configuration.” This message indicates that the RTS command has failed because the maximum number of PE CPs are already in service.

SM

The SM command is a non-menu command. The SM command instructs the XA-Core system to display the shared memory (SM) MAP level.

Menu selection number

The PE MAP does not display an SM menu number.

Type

Navigational

Parameters

There are no command parameters.

Options

There are no command options.

Command format examples

Example use of the SM command is shown in Table "SM command example". The SM command syntax is shown in the example below:

COMMAND

SM command example

Command example	Command description
>SM	Exit from the current MAP session and display the SM MAP level.

Tape

The Tape command is a non-menu command. The Tape command instructs the system to display the XA-Core Tape MAP.

Menu selection number

The PE MAP does not display a Tape menu number.

Type

Navigational

Parameters

There are no command parameters.

Options

There are no command options.

Command format examples

Example use of the SM command is shown in Table "Tape command example". The SM command syntax is shown in the example below:

COMMAND

Tape command example

Command example	Command description
>TAPE	Exit from current MAP session and display the Tape MAP level

Processor Element (PE) MAP level (continued)

Trnsl_

The Trnsl_ (Translate) command instructs the XA-Core system to display the following PE CP information:

- memory address ranges
- module numbers
- state of memory (spare or active)

You can enter the <address_value> parameters to indicate the modules that contain the memory information.

Menu selection number

16

Type

Informational

Parameters

The Trnsl_ command requires parameters. If you do not enter any parameters or you enter invalid parameters, the MAP terminal displays an error message. The MAP terminal prompts you to enter a correct parameter value.

Address

Use the <address> parameter to instruct the XA-Core to display the memory module address value.

Card

Use the <card> parameter to identify the PE CP subsystem type. Use the <card> parameter with the <address_value> parameter value.

nn

Use the <nn> (slot number) parameter value to indicate the number of the physical shelf slot - 1 to 18.

s

Use the <s> (side) parameter value to indicate the CP location in the physical shelf - front (f) or rear (r).

Address_value (page+Offset)

Enter the <address_value> parameter value to display the number of the memory address module in the PE CP. Use the <address_value> parameter with the <address> and <nn> <s> parameters.

Options

There are no command options.

Command format examples

Example use of the Trnsl_ command is shown in Table "Trnsl_ command examples". The Trnsl_ command syntax is shown in the example below:

COMMAND <parameter>

Trnsl_ command examples

Command example	Command description
>TRNSL address 4 f #nnnnnnnn	TRNSL <address> <nn> <s> <address_value>: Display the PE memory module information
>TRNSL card 4 f	TRNSL <card> <nn> <s>: Display the PE memory modules that contain the required information

Tst_

The Tst_ (Test) command instructs the XA-Core system to perform tests on the PE CP. The type of test performed depends on the working state (in-service or out-of-service) of the PE CP.

An in-service test performs non-destructive tests. An out-of-service test performs a memory match to check that SM memory modules can be synchronized.

Menu selection number

6

Type

Operational

Parameters

The Tst_ command requires parameters. If you do not enter any parameters or you enter invalid parameters, the MAP terminal displays an error message. The MAP terminal prompts you to enter a correct parameter value.

The Tst_ command requires the following command parameters.

Processor Element (PE) MAP level (continued)

nn

Use the <nn> (slot number) parameter value to indicate the number of the physical shelf slot - 1 to 18.

s

Use the <s> (side) parameter value to indicate the PE location in the physical shelf - front (f) or rear (r).

Options

You can enter the following command option in the command statement:

Nowait

Use the [nowait] option to allow you to continue with other system tasks while the system test is executing.

Command format examples

Example use of the Tst_ command is shown in Table "Tst_ command examples". The Tst_ command syntax is shown in the example below:

COMMAND <parameter> [option]

Tst_ command examples

Command example	Command description
>TST 4 f	TST <nn> <s>: Perform a test on the PE CP.
>TST 4 f nowait	Perform a test on the PE CP. Display the MAP prompt and continue with other MAP tasks.

Uneq

Menu selection number

12

Type

Operational

Description

Use the uneq command to unequip a slot.

Processor Element (PE) MAP level (continued)

Release history

BASE14

Feature 59009527 (XA-4000: XA-Core Provisioning) introduces command uneq.

Limitations and restrictions

Remove the card from the slot before entering the uneq command.

Syntax

The uneq command syntax is as follows:

```
UNEQ Parms:[<slot>]
```

The following table describes the parameters and variables of the uneq command.

Command parameter and variable descriptions

Parameters and variables	Value	Description
slot	numeric	Enter the slot number to deprovision.

Example

The following table provides an example of the uneq command.

Command example

Command:	**>** uneq 5 front
Description of task:	Unequip the slot 5 front.
MAP response:	command submitted Uneq 5 Front completed
Explanation:	This response indicates that the uneq command is successful and the component is deprovisioned..

Processor Element (PE) MAP level (continued)

Responses

The following table explains possible responses to the command.

MAP responses with associated meanings and actions

Command:	**>**uneq 5 front
MAP response:	command submitted Uneq 5 Front completed
Meaning:	This response indicates that the uneq command is successful and the component is deprovisioned.
Actions:	None.
Command:	**>**uneq 5 front
MAP response:	Hardware part of basic inventory, no action taken.
Meaning:	This response indicates that uneq command was rejected because it compromised redundancy.
Actions:	Do not issue the uneq command.
Command:	**>**uneq 5 front
MAP response:	Improper state for required action, no action taken.
Meaning:	This response indicates that card is not manbusy.
Actions:	Manbusy the card, remove it from the shelf and reissue the command.

XACMtc

The XACMtc command is a non-menu command. The XACMtc command instructs the XA-Core system to display the XA-Core maintenance (XACMtc) MAP level.

Menu selection number

The PE MAP level does not display an XACMtc menu number.

Type

Navigational

Parameters

There are no command parameters.

Options

There are no command options.

Processor Element (PE) MAP level (end)

Command format examples

Example use of the XACMtc command is shown in Table "XACMtc command example". The XACMtc command syntax is shown in the example below:

COMMAND

XACMtc command example

Command example	Command description
>XACMTC	Exit from the current MAP session and display the XACMtc MAP level.

This page is left blank intentionally.

IO MAP level

Introduction

Operating company personnel use the XA-Core Input/Output (IOP) MAP to perform maintenance actions on the high performance input/output processor (HIOP) circuit packs (NTLX04), on the high performance CMIC (HCMIC) circuit packs (NTLX17), and on the IOP circuit packs (NTLX03) and their associated packlets. Select the IO option from the XA-Core (XAC) MAP to display the XA-Core IO MAP.

IO MAP level

The IO MAP level is an interface that allows you to monitor and perform input/output CP maintenance activities. The command interpreter output area displays information about HIOP CPs (if equipped), about HCMIC CPs (if equipped) , and about the IOP CPs and their packlets.

In the IO MAP level, you can perform maintenance actions only on the common equipment of the HIOP, HCMIC, and IOP CPs. To perform maintenance actions on the functional components of an HIOP or HCMIC CP, or on packlets, you must go to the appropriate MAP level, for example, the ETHR MAP level for ethernet components or packlets.

The following figure shows the IO MAP screen for an XA-Core shelf that has

- IOP circuit packs containing disk and tape packlets in slots 2 front and 17 front. The easy way to recognize that these entries are for IOP circuit packs is that in each entry the “Middle” field is blank.
- HCMIC circuit packs in slots 4 rear and 15 rear. Note that in the entries for the. The easy way to recognize that these entries are for HCMIC circuit packs is that in each case the value of the “Lower” field is CMIC. The ETHR sections of these circuit packs are shown as unequipped, as indicated by the “-”.

  Note: The ethernet sections of the HCMIC circuit packs are shown as unequipped because there are a maximum of four ethernet links per XA-Core shelf, and the four ethernet links are supported by the four HIOP circuit packs in the shelf. (HIOPs have priority over HCMICs for supporting ethernet links.) If there were only two HIOPs in the shelf, then the HCMICs could support the third and fourth ethernet links for the shelf, in which case the ETHR sections of the HCMICs would be shown as equipped, which would be indicated by a “.”.

- HIOP circuit packs in slots 5 rear, 6 rear, 13 rear, and 14 rear. The easy way to recognize that these entries are for HIOP circuit packs is that in each case the value of the “Lower” field is AMDI. The RTIF sections of HIOP

IO MAP level (continued)

circuit packs are not used, so they are shown as unequipped, as indicated by the “-”.

IO MAP level

```
 XAC        MS       IOD      Net       PM      CCS      Lns     Trks     Ext      APPL
 .          .        .        .         .       .        .       .        .        .

IO                 Front:   111111111  Rear: 111111      SM     PE     IO      PKLT
 0 Quit            123456789012345678  456789012345      .      .      .       .
 2               Sta: . .- ..-.. .  . .  ....-..--...     0      0      0       0
 3               Dep:
 4               Typ: *               *   ***      ***
 5               Slot: Side: Status:              Upper:     Middle:     Lower:
 6 Tst_            2   Front     .               Tape .                 Disk .
 7 Bsy_           17   Front     .               Tape .                 Disk .
 8 RTS_            4   Rear      .               RTIF .     ETHR -      CMIC .
 9                 5   Rear      .               RTIF -     ETHR .      ADMI .
10 LoadFW_         6   Rear      .               RTIF -     ETHR .      ADMI .
11                13   Rear      .               RTIF -     ETHR .      ADMI .
12 Uneq_          14   Rear      .               RTIF -     ETHR .      ADMI .
13                15   Rear      .               RTIF .     ETHR -      CMIC .
14 Alarm_       XAC:
15 Cntrs_       IO:
16
17 Indicat_
18 Query_
 XMAP0
Time  14:12   >
```

IO menu commands

Menu commands appear on the MAP command menu. Non-menu commands do not appear on the MAP menu list. Enter both menu and non-menu commands in the command interpreter input area.

IO MAP level (continued)

Table "Summary of IO MAP level commands" contains a summary description of IO MAP commands.

Summary of IO MAP level commands

Command	Menu #	Type	Function
Alarm_	14	Op/Info	Permit, disable or query alarm notifications
AMDI	Non-menu	Nav	Display the AMDI MAP level
Bsy_	7	Op	Place an HIOP, HCMIC, or IOP CP in ManB state
CMIC	Non-menu	Nav	Display the CMIC MAP level
Cntrs_	15	Info	Display the non-zero system-busy (SysB) transition counters, or reset the SysB transition counters for a specified component
Disk	Non-menu	Nav	Display the Disk MAP level
ETHR	Non-menu	Nav	Display the ETHR MAP level
Indicat_	17	Info	Cause a CP or packlet LED to wink
LoadFW_	10	Op	Use the LoadFW command to load firmware (FW) on a card without removing the card or packlet from the shelf.
PE	Non-menu	Nav	Display the PE MAP level
Query_	18	Info	List information for any CP or packlet
Quit	0	Nav	Exit from the IO MAP level and display the XAC MAP level
RTIF	Non-menu	Nav	Display the RTIF MAP level
RTS_	8	Op	Test and return the HIOP, HCMIC, or IOP CP to service
SM	Non-menu	Nav	Display the SM MAP level
Tape	Non-menu	Nav	Display the Tape MAP level
Tst_	6	Op	Perform a test on the HIOP, HCMIC, or IOP CP
Uneq_	12	Op	Unequip a slot
XACMtc	Non-menu	Nav	Display the XACMtc MAP level

IO MAP level (continued)

Alarm_

The Alarm_ command is a common menu command. The Alarm_ command allows you to perform the following tasks:

- permit notification for selected alarms
- disable notification for selected alarms
- query the XA-Core system to identify alarm conditions or examine the status of alarms

Menu selection number

14

Type

Operational or Informational

Parameters

The Alarm_ command requires command parameters. If you do not enter any parameters or you enter invalid parameters, the MAP terminal prompts you to enter a correct parameter value. The Alarm_ command requires at least one of the following command parameters:

Alarm_name

Use the <alarm_name> parameter to indicate the name of the XA-Core system alarm. You can use the <alarm_name> parameter with the <disable> and <enable> parameters.

All

Use the <all> parameter to enable or disable notification for all alarms (use with the <enable> or <disable> parameter.

Disable

Use the <disable> parameter to prevent the XA-Core system from displaying alarm notification messages on the MAP screen. You can disable either one alarm at a time or all alarms. Use the <disable> parameter with the Alarm_ command and <alarm_name> parameter to disable a single alarm. Use the <disable> parameter with the <all> parameter to disable all XA-Core alarms. The <disable> parameter remains active until you enable the alarm or the system performs a restart.

Enable

Use the <enable> parameter to instruct the XA-Core system to display an alarm notification message on the MAP terminal. You can enable either one alarm or all alarms. Use the <enable> parameter together with the Alarm_

command and <alarm_name> parameter to enable a single alarm. Use the <enable> parameter with the <all> parameter to enable all XA-Core alarms.

Raised

Use the <raised> parameter to display all active alarms, the alarm severity and enabled/disabled status. You can use the <raised> parameter with the [enabled] or [disabled] options. If you do not enter any options, the XA-Core system MAP displays all active, enabled and disabled alarms.

Options

You can enter one of the following command options in the command statement:

Disabled

Use the [disabled] option with the <raised> parameter. The option instructs the XA-Core system to display all active alarms that have a disabled status.

Enabled

Use the [enabled] option with the <raised> parameter. The option instructs the XA-Core system to display all active alarms that have an enabled status.

Command format examples

Example use of the Alarm_ command is shown in Table "Alarm_ command examples". The Alarm_ command syntax is shown in the example below:

COMMAND <parameter> [option]

Alarm_ command examples (Sheet 1 of 2)

Command example	Command description
>ALARM tape	ALARM <alarm_name>: Display the alarm severity and status for a single alarm.
>ALARM all	ALARM <all>: Display the alarm severity and status for all alarms.
>ALARM all disable	ALARM <all> <disable>: Disable notification for all alarms.
>ALARM tape disable	ALARM <alarm_name> <disable>: Disable notification for a single alarm.
>ALARM all enable	ALARM <all> <enable>: Enable notification for all alarms.

IO MAP level (continued)

Alarm_ command examples (Sheet 2 of 2)

Command example	Command description
>ALARM tape enable	ALARM <alarm_name> <enable>: Enable notification for a single alarm.
>ALARM raised	ALARM <raised>: Display all active alarms
>ALARM raised enabled	ALARM <raised> [enabled]: Display active alarms that have an enabled status
>ALARM raised disabled	ALARM <raised> [disabled]: Display active alarms that have an disabled status

AMDI

The AMDI command is a non-menu command. The AMDI command instructs the XA-Core system to display the AMDI MAP level.

Menu selection number

The IO MAP level does not display an AMDI menu number.

Type

Navigational

Parameters

There are no command parameters.

Options

There are no command options.

Command format examples

Example use of the AMDI command is shown in Table "AMDI command examples". The AMDI command syntax is shown in the example below:

COMMAND

AMDI command examples

Command example	Command description
>AMDI	Exit from the current MAP session and display the AMDI MAP level.

Bsy_

The Bsy_ (Busy) command places an in-service (InSv) HIOP CP or HCMIC CP or IOP CP in a ManB state. When an IOP CP is in a ManB state, its packlets are in a CBsy busy state. When an HIOP CP is in a ManB state, its ports and links are in a CBsy busy state. When an HCMIC CP is in a ManB state, its ports and links are in a CBsy busy state.

Before the Bsy request is carried out, software conducts an impact assessment to determine if it is safe to execute the command, based on redundancy requirements associated with each link. For example, the XA-Core system needs at least one in-service (InSv) OC-3 dual port interface packlet. The XA-Core system also needs at least one InSv RTIF packlet.

The Bsy_ command aborts if the redundancy check detects that a complete loss of all CMIC and RTIF links can occur. The IO MAP terminal displays an error message and the CP remains InSv. The Force option will override the busy impact only if the action does not create a critical alarm condition.

Menu selection number

7

Type

Operational

Parameters

The Bsy_ command requires command parameters. If you do not enter any parameters or you enter invalid parameters, the MAP terminal displays an error message. The MAP terminal prompts you to enter a correct parameter value. The Bsy_ command requires the following command parameters:

nn

Use the <nn> (slot number) parameter value to indicate the number of the physical shelf slot - 1 to 18.

s

Use the <s> (side) parameter value to indicate the CP location in the physical shelf - front (f) or rear (r).

Options

You can enter one of the following command options in the command statement:

IO MAP level (continued)

Force

The [force] option instructs the system to bypass redundancy checks and continue to execute the command.

When you use the [force] option in this MAP level, the system displays a message warning that the command will take the circuit pack out of service, and asking you to confirm the command.

If you confirm the command, the system may display another warning message and ask you to re-confirm the command. The system does this if some of the IO components in the system are unstable. The warning message identifies the unstable IO components, and tells you that executing the command might jeopardize the system further.

The [force] option won't operate if a total loss of redundancy can occur as a result of the command.

Use the [force] option with caution. System messages and prompts help you to prevent a possible outage.

Noprompt

Use the [noprompt] option to bypass system prompts and continue to execute the command. The [noprompt] option won't operate if a total loss of redundancy cam occur as a result of the command. Use the [noprompt] option with caution. System messages and prompts help you to prevent a possible outage.

Command format examples

Example use of the Bsy_ command is shown in Table "Bsy_ command examples". The Bsy_ command syntax is shown in the example below:

COMMAND <parameter> [option]

Bsy_ command examples (Sheet 1 of 2)

Command use	Command description
>BSY 4 r	BSY <nn> <s> Place the HCMIC CP or IOP CP in a ManB state.
>BSY 5 r force	BSY <nn> <s> [force]: Place the HIOP CP or IOP CP in a ManB state if total loss of redundancy does not result.

Bsy_ command examples (Sheet 2 of 2)

Command use	Command description
>BSY 5 r noprompt	BSY <nn> <s> [noprompt]: Place the HIOP CP or IOP CP in a ManB state. Block warning/ prompt messages.

CMIC

The CMIC command is a non-menu command. The CMIC command instructs the XA-Core system to display the CMIC MAP level.

Menu selection number

The IO MAP level does not display a CMIC menu number.

Type

Navigational

Parameters

There are no command parameters.

Options

There are no command options.

Command format examples

Example use of the CMIC command is shown in Table "CMIC command examples". The CMIC command syntax is shown in the example below:

COMMAND

CMIC command examples

Command example	Command description
>CMIC	Exit from the current MAP session and display the CMIC MAP level.

Cntrs_

The Cntrs_ command instructs the XA-Core system to either display the current values of all non-zero system-busy (SysB) transition counters, or to reset to zero the SysB transition counters for a specified component. A SysB transition counter counts the number of times that a component’s state changes from in-service to system-busy.

IO MAP level (continued)

The system maintains separate SysB transition counters for each instance of each of the following components:

- IOP, HIOP, and HCMIC circuit packs
- all packlets: disk, tape, CMIC, RTIF, Ethernet, and AMDI
- sections of HIOP circuit packs that are supporting ETHR and AMDI connections
- sections of HCMIC circuit packs that are supporting CMIC, RTIF, and ETHR connections
- time-of-day (TOD) devices
- ports

For each component, the system counts the SysB transitions that occur during the current six-hour interval. It also remembers the totals from the seven preceding six-hour intervals. It sums the totals from the seven preceding intervals and the current interval, to obtain the total number of SysB transitions occurring during a 42-to-48-hour period.

The monitored components are divided into groups and for each group there are minor and major threshold values. The minor and major thresholds are for a 42-to-48-hour period. If a component's total number of SysB transitions for the 42-to-48-hour period equals or exceeds the minor threshold for its component group, and if a SysBTh minor or major alarm is not already in effect, the system raises a SysBTh minor alarm (unless the alarm has been disabled). If a component's total number of SysB transitions for the 42-to-48-hour period equals or exceeds the major threshold for its component group, and if a SysBTh major alarm is not already in effect, the system raises a SysBTh major alarm (unless the alarm has been disabled). For information on the component groups, see the description of the "Query" parameter, below. For information on the SysBTh minor and major alarms and for information on disabling alarms, see the *XA-Core Maintenance Manual*, 297-8991-510.

Menu selection number

15

Type

Informational

Parameters

The Cntrs_ command requires either the <query> parameter or the <reset> parameter.

If you use the <query> parameter, no other parameters are permitted.

If you use the <reset> parameter, you must use additional parameters to specify a component: The <nn> and <s> parameters are required in all CNTRS RESET commands. The <p> parameter is required in some CNTRS RESET commands. The <device> parameter is required in some CNTRS RESET commands.

Query

The <query> parameter instructs the XA-Core system to display the following information.

- Either the value of all system-busy (SysB) transition counters that are greater than zero, or the message: `No SysB transitions on any components in the last 42-48 hrs.` A SysB transition counter counts the number of times that a component goes from the in-service state to the SysB state. For a list of the components for which the system maintains SysB transition counters, see the beginning of this "Cntrs_" section. The system maintains a separate SysB transition counter for each instance of each listed component, for example, for each TOD device. For each component, the system counts the SysB transitions that occur during the current six-hour interval. It also maintains a record of the totals from the seven preceding six-hour intervals. It sums the totals from the seven preceding intervals and the current interval, to obtain the total number of SysB transitions occurring during a 42-to-48-hour period.
- The values of the minor and major thresholds for each component group. (Component groups are described below.) The thresholds are shown in an output line that resembles the following:

  SysBTh thresholds: (Min/Maj): PE=2/6; SM=2/4; IOhw=2/6; IOlk=2/8

  > ***Note:*** The threshold values shown in the example are for illustrative purposes only. If the values shown in the example differ from the output of the CNTRS QUERY command, you should regard the command output as correct.

  For each component group, a slash separates the minor and major threshold values. For example, “SM=2/4” means that the minor threshold for the SM group is 2, and the major threshold is 4.

  The minor and major thresholds are for a 42-to-48-hour period. If a component’s total number of SysB transitions for the 42-to-48-hour period equals or exceeds the minor threshold for that group, and if a SysBTh minor or major alarm is not already in effect, the system raises a SysBTh minor alarm (unless the alarm has been disabled). If a component’s total number of SysB transitions for the 42-to-48-hour period equals or exceeds the major threshold for that group, and if a SysBTh major alarm is not

IO MAP level (continued)

already in effect, the system raises a SysBTh major alarm (unless the alarm has been disabled). For information on the SysBTh minor and major alarms and for information on disabling alarms, see the *XA-Core Maintenance Manual*, 297-8991-510.

The component groups are as follows.

— The PE group includes PE circuit packs.

— The SM group includes SM circuit packs.

— The IO link (IOlk) group includes IO links.

— The IO hardware (IOhw) group includes IOP, HIOP, and HCMIC circuit packs, all packlets, sections of HIOP circuit packs that are supporting ETHR and AMDI connections, sections of HCMIC circuit packs that are supporting RTIF, ETHR, and CMIC connections, time-of-day (TOD) devices, and ports.

Reset

The <reset> parameter instructs the system to reset to zero the value of the system-busy (SysB) transition counters for a specific component. The parameters following the <reset> parameter specify the component.

Use the <reset> parameter with the <nn> and <s> shelf location parameters for a circuit pack or with the <nn>, <s>, and <p> shelf location parameters for a packlet. With the <reset> parameter, use the <device> parameter to identify a port or a link or a time-of-day device (TOD).

Note 1: Ordinarily, you should use the <reset> parameter only for links. Use it after you have corrected a link fault, to reset the SysB transition counters for the link.

Note 2: Ordinarily, for all components other than links, you should let the system reset the counters automatically. The system resets a component's counters automatically when you replace the component. Alternatively, if the SysB transitions stop occurring, the counters will revert to zero after seven six-hour intervals. At the beginning of each six-hour interval, the system starts a six-hour transition counter at zero and it adjusts the 42-to-48-hour total to reflect the seven preceding six-hour intervals. If the component goes through seven consecutive six-hour intervals without a SysB transition, all the counters revert to zero.

nn

Use the <nn> (slot number) parameter value to indicate the number of the physical shelf slot where a CP or packlet is located - 1 to 18. The component could be the CP or packlet, or it could be a device on the CP or packlet. The <nn> parameter is required in all cases.

s

Use the <s> (side) parameter value to indicate the location in the physical shelf of a CP or packlet - front (f) or rear (r). The component could be the CP or packlet, or it could be a device on the CP or packlet. The <s> parameter is required in all cases.

p

Use the <p> (position) parameter value to indicate the packlet location in an input/output processor (IOP) - upper (u) or lower (l). The <p> parameter is required if the component is a packlet or a device on a packlet.

Device

Use the <device> parameter if the component is a link, a port, or a TOD device.

Options

There are no command options.

Command format examples

Example use of the Cntrs_ command is shown in Table "Cntrs_ command examples". The Cntrs_ command syntax is shown in the example below.

COMMAND <parameter>

Cntrs_ command examples (Sheet 1 of 2)

Command example	Command description
>Cntrs query	CNTRS QUERY: Display the values of all non-zero SysB transition counters, and display the minor and major threshold values.
>Cntrs reset 14 r	CNTRS RESET <nn> <s>: Reset the SysB transition counter for the circuit pack in slot 14R (an IOP or HIOP circuit pack).
>Cntrs reset 15 r u	CNTRS RESET <nn> <s> <p>: Reset the SysB transition counter for the packlet in slot 15R, upper (a CMIC packlet).
>Cntrs reset 6 r u link	CNTRS RESET <nn> <s> <p> <device>: Reset the SysB transition counter for the link on the ethernet packlet in slot 6R, upper.
>Cntrs reset 4 r l port0	CNTRS RESET <nn> <s> <p> <device>: Reset the SysB transition counter for port0 (the local port) on the RTIF packlet in slot 4R, lower.

IO MAP level (continued)

Cntrs_ command examples (Sheet 2 of 2)

Command example	Command description
>Cntrs reset 13 r l link0	CNTRS RESET <nn> <s> <p> <device>: Reset the SysB transition counter for link0 on the AMDI packlet in slot 13R, lower.
>Cntrs reset 14 r link1	CNTRS RESET <nn> <s> <device>: Reset the SysB transition counter for link1 on the AMDI section of the HIOP circuit pack in slot 14R.
>Cntrs reset 15 r tod0	CNTRS RESET <nn> <s> <device>: Reset the SysB transition counter for the tod0 time-of-day device on the CMIC section of the HCMIC circuit pack in slot 15R.

Disk

The Disk command is a non-menu command. The Disk command instructs the XA-Core system to display the Disk MAP level.

Menu selection number

The IO MAP level does not display a Disk menu number.

Type

Navigational

Parameters

There are no command parameters.

Options

There are no command options.

Command format examples

Example use of the Disk command is shown in Table "Disk command example". The Disk command syntax is shown in the example below:

COMMAND

Disk command example

Command example	Command description
>DISK	Exit from current MAP session and display the Disk MAP level

ETHR

The ETHR command is a non-menu command. The ETHR command instructs the XA-Core system to display the Ethernet (ETHR) MAP level.

Menu selection number

The IO MAP level does not display an ETHR menu number.

Type

Navigational

Parameters

There are no command parameters.

Options

There are no command options.

Command format examples

Example use of the ETHR command is shown in Table "ETHR command examples". The ETHR command syntax is shown in the example below:

COMMAND

ETHR command examples

Command example	Command description
>ETHR	Exit from the current MAP session and display the ETHR MAP level.

Indicat_

The Indicat_ command is a common command. The command causes LEDs on CPs or packlets to wink or illuminate. The command allows you to locate a device on the physical shelf or to make sure all LEDs work. CPs and packlets must be in a ManB state before you use the Indicat_ card command.

Note: If you use the Indicat_ command with the <test> or <testall> parameters, CPs and packlets do not have to be in a ManB state.

Menu selection number

17

Type

Informational

IO MAP level (continued)

Parameters

The Indicat_ command requires parameters. If you do not enter any parameters or you enter invalid parameters, the MAP terminal displays an error message. The MAP terminal prompts you to enter a correct parameter value.

The Indicat_ command requires at least two of the shelf location parameters. In addition to the shelf location parameters, you can enter one of the following parameters:

Card

Use the <card> parameter to cause the red triangular LED of a SysB (system busy) or ManB CP or packlet to wink. You can use the [timer] option with the <card> parameter.

Clear

Use the <clear> parameter to return LEDs to a normal working state on a single winking or testing CP or packlet. Use the <clear> parameter with the shelf location parameters.

Clearall

Use the <clearall> parameter to return all winking or testing LEDs on all CPs or packlets to a normal working state.

Test

Use the <test> parameter to light the red LED on a single CP or packlet. The CP or packlet does not have to be in a ManB state. LEDs already winking on other CPs or packlets continue to wink. Use the <test> parameter with the shelf location parameters. You can use the <test> parameter with the [timer] option.

Testall

Use the <testall> parameter to light all LEDs on all CPs and packlets. The CPs and packlets do not have to be in a ManB state. LEDs already winking on other CPs or packlets continue to wink. You can use the <testall> parameter with the [timer] option. Do not use the shelf location parameters with the <testall> parameter.

nn

Use the <nn> (slot number) parameter value to indicate the number of the physical shelf slot - 1 to 18.

s

Use the <s> (side) parameter value to indicate the CP or packlet location in the physical shelf - front (f) or rear (r).

p

Use the <p> (position) parameter value to indicate the packlet location in an input/output processor - upper (u) or lower (l).

Options

You can enter the following option in the command statement:

Timer

Use the [timer] option to indicate the time (in minutes) to light or wink LEDs. The XA-Core system turns the LEDs off when the time expires. The minimum time period is 1 min. The maximum time period is 999 min. If you do not define a time period, the default time period is 120 min.

Use the [timer] option as follows:

- use the [timer] option with the <card> parameter to wink a red LED on a single CP or packlet for a period of time.
- use the [timer] option with the <test> parameter to light the red LED on a CP or packlet for a period of time.
- use the [timer] option with the <testall> parameter to light the red LED on all CPs and packlets for a period of time.

Command format examples

Example use of the Indicat_ command is shown in Table "Indicat_ command examples". The Indicat_ command syntax is shown in the example below:

COMMAND <parameter> [option]

Indicat_ command examples (Sheet 1 of 2)

Command example	Command description
>INDICAT card 4 r u	INDICAT <card> <nn> <s> <p>: Wink red LED on a single ManB packlet.
>INDICAT card 4 r u 5	INDICAT <card> <nn> <s> <p> [timer]: Wink red LED on a single ManB packlet for 5 min.
>INDICAT clear 4 r u	INDICAT <clear> <nn> <s> <p>: Return LEDs on a single packlet to a normal working state.
>INDICAT clearall	INDICAT <clearall>: Return all LEDs on all CPs and packlets to a normal working state.

IO MAP level (continued)

Indicat_ command examples (Sheet 2 of 2)

Command example	Command description
>INDICAT test 4 r 5	INDICAT <test> <nn> <s> [timer]: Light all LEDs on a single CP for 5 min. If the command does not include the [timer] option, the XA-Core default time value is 120 min.
>INDICAT testall 5	INDICAT <testall> [timer]: Light all LEDs on all CPs and packlets for 5 min. The amber LEDs on the shelf interface modules (SIM) CPs do not light. The <test> parameter does not cause an audible alarm nor alarm notification on the MAP terminal. CPs or packlets now under test continue to wink
>INDICAT testall	INDICAT <testall>: Light all LEDs on all CPs and packlets for 120 min.

LoadFW_

Type

The LoadFW_ command is a menu listed command.

Target

The command target for the LoadFW_ command is XA-Core.

Description

Use the LoadFW_ command to load firmware (FW) on an HIOP CP or an HCMIC CP or an IOP CP without removing the CP from the shelf.

Load the firmware by downloading the load from a file or cloning the load from another circuit pack of the same type.

Release history

BAS14

LoadFW_ command is introduced in BAS14.

Syntax

The LoadFW_ command syntax is as follows:

```
LoadFW - Load FW onto a <card or packlet type> card.
Parms: <Slot number>   {1 TO 18}
       <Side of shelf> {FRONT, F, REAR, R}
   or  <Packlet position> {UPPER, U,LOWER, L}
       <Copy from FILE or another card>
              {FILE <which file>   {NEW, N, CURRENT, C}}

       [<Options> {NOWAIT}]
```

The following table describes the parameters and variables of the LoadFW_ command.

Command parameter and variable descriptions

Parameters and variables	Value	Description
Slot number	1 to 18	The slot number in the XA-Core shelf where the circuit pack is located.
Side of shelf	front, f, rear, r	The side of the shelf where the circuit pack is located. Front or f indicates the front side of the shelf where the circuit pack is located. Rear or r indicates the rear side of the shelf where the circuit pack is located.
Copy from file	file	The file parameter indicates that the system copies the firmware load from this file.
FILE <which file>	new, n, current, c	The volume and filename in the table XAFWLOAD. New or N indicates the system copies the new firmware load from a file. Current or c indicates the system copies the current firmware load from a file.
options	nowait	The nowait parameter directs the system to allow use of the MAP for other functions while the test is running.

IO MAP level (continued)

Example

The following table provides an example of the LoadFW_ command.

Command example

Command:	**>loadfw 5 r file new**
Description of task:	The LoadFW command is issued

MAP response:	`Warning: LoadFW command will change FW.`
	`Proceed (Y or N)`
	`Noprompt option is NOT available.`

Explanation:	The warning response indicates a request for confirmation of the LoadFW command. Also, the noprompt option is not available.

Responses

The following table explains possible responses to the LoadFW_ command.

MAP responses with associated meanings and actions (Sheet 1 of 2)

Command:	**>loadfw 4 f file new**
MAP response:	`LoadFW 4 f failed`
Meaning:	The LoadFW_ command has failed or been rejected.
Reason:	The MAP displays the reason for the failure. (For a list of possible reasons, see the description of log XAC333 in the chapter, “Understanding XA-Core log reports”.) Record the reason.
Action:	If major faults or the message NO VALID FW IN FLASH appears, load current firmware manually. For minor faults where the system recovers successfully, perform the actions listed on the MAP screen.
Command:	**>loadfw 4 rear file new**

MAP response:	`Command Submitted.`
	`LoadFW 4 Rear failed`
	`Reason: Table entry not found.`

Meaning:	The LoadFW_ command has failed or been rejected.
Reason:	The reason indicates table XAFWLOAD does not contain the file volume or name.
Action:	Correct the entry in table XAFWLOAD.
Command:	**>loadfw 4 rear file new**

MAP responses with associated meanings and actions (Sheet 2 of 2)

MAP response:	`Command Submitted.`
	`LoadFW 4 Rear Lower failed`
	`Reason: Unknown file type.`

Meaning:	The LoadFW_ command has failed or been rejected.
Reason:	The reason indicates table XAFWLOAD contains the correct file volume and name but the file is not a firmware load.
Action:	Copy a file that contains the correct firmware load.

PE

The PE command is a non-menu command. The PE command instructs the XA-Core system to display the XA-Core processor element (PE) MAP level.

Menu selection number

The IO MAP level does not display a PE menu number.

Type

Navigational

Parameters

There are no command parameters.

Options

There are no command options.

Command format examples

Example use of the PE command is shown in Table "PE command example". The PE command syntax is shown in the example below:

COMMAND

PE command example

Command example	Command description
>PE	Exit from the current MAP session and display the PE MAP level.

IO MAP level (continued)

Query_

The Query_ command is a common command. The Query_ command causes the MAP terminal to display the following information for a single CP:

- the product engineering code (PEC)
- the hardware release
- the baseline hardware release (as specified in table PECINV)
- whether the hardware is compatible with the baseline and exception specifications (specifications found in table PECINV)
- the serial number
- the version of the current firmware (the firmware that is in the circuit pack)
  - for an HIOP circuit pack, the current FW and DLL loads
  - for an IOP or HCMIC circuit pack, the current FW load

    Note: For more information on HCMIC firmware, see the note following the “full ROM version” item in this list.

- the baseline FW firmware version (as specified in table FWINV), and, if the circuit pack is an HIOP, the baseline DLL firmware version
- whether the current FW firmware load is compatible with the baseline and exception specifications (specifications found in table FWINV), and, if the circuit pack is an HIOP, whether the current DLL load is compatible with the baseline and exception specifications
- the hardware/software vintage
- the full ROM version, that is, the full identification of the current FW firmware load (including the version code and any extensions), and, if the circuit pack is an HIOP or an HCMIC, the full DLL version

  Note: For an HCMIC circuit pack, the full ROM version differs from the FW load identified elsewhere (for example, earlier in the output of this command). The HCMIC takes a single firmware load. That single load, although identified elsewhere as an FW load, is a bundled load that contains an FW load and a DLL load. The FW and DLL loads are listed separately in the “full ROM version” and “full DLL version” fields.

- if the circuit pack is an HIOP or HCMIC, the following items:
  - the ethernet MAC address
  - the port IP address, which is the software maintenance IP address

— assigned IP address 1, which is the hardware/firmware maintenance IP address, used for hardware maintenance actions and audits

— assigned IP address 2, which is the card IP address

The parameters determine the type of information displayed.

Menu selection number

18

Type

Informational

Parameters

The Query_ command requires command parameters. If you do not enter any parameters or you enter invalid parameters, the MAP terminal displays an error message. The MAP terminal prompts you to enter a correct parameter value.

If you use the Query_ command with the <card> parameter, enter the shelf location parameters. If you use the Query_ command with the <type> parameter or with the <shelf> parameter, do not enter the shelf location parameters.

Card

Use the <card> parameter to instruct the XA-Core system to perform a query on a CP or packlet. Display the description to the MAP terminal. You must use the <card> parameter with the CP or packlet shelf location parameters.

nn

Use the <nn> (slot number) parameter value to indicate the number of the physical shelf slot - 1 to 18.

s

Use the <s> (side) parameter value to indicate the CP or packlet location in the physical shelf - front (f) or rear (r).

p

Use the <p> (position) parameter value to indicate the packlet location in an input/output processor - upper (u) or lower (l).

IO MAP level (continued)

Shelf

Use the <shelf> parameter to instruct the XA-Core system to retrieve information about all the components installed in the shelf. The <shelf> parameter retrieves the information you would obtain by entering the Query card command for every circuit pack and packlet in the XA-Core.

Subsystem_name

Use the <subsystem_name> parameter to indicate the name of a subsystem. The value of the subsystem name is either SM, PE, or IO. Use the <subsystem_name> parameter only with the <type> parameter.

Type

Use the <type> parameter to indicate that the query applies to a subsystem of type SM, PE, or IO. Use the <type> parameter with the <subsystem name> parameter. The MAP terminal displays the location of all CPs that match the subsystem type. Do not enter shelf location parameters.

Options

There are no command options.

Command format examples

Example use of the Query_ command is shown in Table "Query_ command examples". The Query_ command syntax is shown in the example below:

COMMAND <parameter>

Query_ command examples (Sheet 1 of 2)

Command example	Command description
>QUERY card 4 r	QUERY <card> <nn> <s>: Display the PEC, serial number, insertion/activation dates software load, firmware version and working state for the CP.
>QUERY card 7 r u	QUERY <card> <nn> <s> <p>: Display the PEC, serial number, insertion/activation dates, software load, firmware version and working state for the packlet.
>QUERY shelf	QUERY <shelf>: Display the PEC, serial number, insertion/activation dates, software load, firmware version, and working state for every CP and packlet in the shelf.

Query_ command examples (Sheet 2 of 2)

Command example	Command description
>QUERY type io	QUERY <type> <subsystem_name>: Display subsystem name and location of all CPs and packlets that match the subsystem type.

Quit

The Quit command is a common command. The Quit command instructs the XA-Core system to exit from the current MAP session. You can exit to any MAP level that is higher in the MAP level hierarchy.

Note: The XA-Core system continues to execute any previous commands entered.

Menu selection number

0

Type

Navigational

Parameters

The Quit command parameters are optional.

All

Use the <all> parameter to terminate all XA-Core MAP sessions and display the CI prompt.

Incrname

Use the <incrname> parameter to end the current MAP session and display a MAP level higher in the MAP system hierarchy. Enter a MAP level name. The XA-Core system displays the MAP level that is one level higher in the MAP system hierarchy than the <incrname> (increment name) value.

Nlevel

Use the <nlevel> parameter to end the current MAP session and display a MAP level higher in the MAP system hierarchy. Enter a number value to represent the number of DMS MAP levels to step-back in the MAP system hierarchy.

Options

There are no command options.

IO MAP level (continued)

Command format examples

Example use of the Quit command is shown in Table "Quit command examples". The Quit command syntax is shown in the example below:

COMMAND <parameter>

Quit command examples

Command example	Command description
>QUIT	Use the Quit command with no parameters to exit from the current MAP session. Display a MAP level that is one level above the current MAP session level.
>QUIT mtc	QUIT <incrname>: Exit the current MAP session. Display the MAP level that is one level above the indicated MAP level name.
>QUIT 2	QUIT <nlevel>: Exit the current MAP session. Display the MAP level that is two levels above the current MAP session in the MAP hierarchy.
>QUIT all	QUIT <all>: Exit from all MAP sessions and display the CI prompt.

RTIF

The RTIF command is a non-menu command. The RTIF command instructs the XA-Core system to display the remote terminal interface (RTIF) MAP level.

Menu selection number

The IO MAP level does not display an RTIF menu number.

Type

Navigational

Parameters

There are no command parameters.

Options

There are no command options

Command format examples

Example use of the RTIF command is shown in Table "RTIF command example". The RTIF command syntax is shown in the example below:

COMMAND

RTIF command example

Command example	Command description
>RTIF	Exit from the current MAP session and display the RTIF MAP level.

RTS_

Use the RTS_ command to instruct the XA-Core system to test and return a ManB HIOP CP or HCMIC CP or IOP CP to service.

The successful return to service of an IOP CP triggers the returning to service of all packlets on that CP that were out of service because of the CP's being out of service.

The successful return to service of an HIOP CP triggers the returning to service of all ports and links on that CP that were out of service because of the CP's being out of service.

The successful return to service of an HCMIC CP triggers the returning to service of all ports, links, and time-of-day (TOD) devices on that CP that were out of service because of the CP's being out of service.

Menu selection number

8

Type

Operational

Parameters

The RTS_ command requires parameters. If you do not enter any parameters or you enter invalid parameters, the MAP terminal displays an error message. The MAP terminal prompts you to enter a correct parameter value.

The RTS_ command requires the following parameters:

IO MAP level (continued)

nn
Use the <nn> (slot number) parameter value to indicate the number of the physical shelf slot - 1 to 18.

s
Use the <s> (side) parameter value to indicate the CP location in the physical shelf - front (f) or rear (r).

Options

There are no command options.

Command format examples

Example use of the RTS_ command is shown in Table "RTS_ command example". The RTS_ command syntax is shown in the example below:

COMMAND <parameter>

RTS_ command example

Command example	Command description
>RTS 5 r	Test and return the ManB HIOP CP or IOP CP to service.
>RTS 4 r	Test and return the ManB HCMIC CP or IOP CP to service.

SM

The SM command is a non-menu command. The SM command instructs the XA-Core system to display the SM MAP level.

Menu selection number

The IO MAP does not display an SM menu number.

Type

Navigational

Parameters

There are no command parameters.

Options

There are no command options.

Command format examples

Example use of the SM command is shown in Table "SM command example". The SM command syntax is shown in the example below:

COMMAND

SM command example

Command example	Command description
>SM	Exit from the current MAP session and display the SM MAP level.

Tape

The Tape command is a non-menu command. The Tape command instructs the system to display the XA-Core Tape MAP level.

Menu selection number

The IO MAP level does not display a Tape menu number.

Type

Navigational

Parameters

There are no command parameters.

Options

There are no command options.

Command format examples

Example use of the Tape command is shown in Table "Tape command example". The Tape command syntax is shown in the example below:

COMMAND

Tape command example

Command example	Command description
>TAPE	Exit from current MAP session and display the Tape MAP level.

IO MAP level (continued)

Tst_

The Tst_ (Test) command instructs the XA-Core system to perform tests on an HIOP CP or HCMIC CP or IOP CP.

> ***Note:*** If performed on an HIOP CP or on an HCMIC CP, the Tst_ command does not test the ports and links on the CP. To test the ports and links, you must go to the appropriate MAP level, for example, the ETHR level for the Ethernet port and link.

The type of test performed depends on the working state (in-service or out-of-service) of the CP.An in-service test performs non-destructive tests. An out-of-service test performs non-destructive and destructive tests.

- checks for the presence of the CP in the system
- tests the internal communication links and LED functionality

> ***Note:*** A non-destructive test maintains access to data or the data recorded in memory. A destructive test deletes access to data.

Menu selection number

6

Type

Operational

Parameters

The Tst_ command requires parameters. If you do not enter any parameters or you enter invalid parameters, the MAP terminal displays an error message. The MAP terminal prompts you to enter a correct parameter value.

The Tst_ command requires the following command parameters.

nn

Use the <nn> (slot number) parameter value to indicate the number of the physical shelf slot - 1 to 18.

s

Use the <s> (side) parameter value to indicate the CP location in the physical shelf - front (f) or rear (r).

Options

You can enter one of the following command options in the command statement:

Nowait

Use the [nowait] option to allow you to continue with other system tasks while the system test is executing.

Command format examples

Example use of the Tst_ command is shown in Table "Tst_ command examples". The Tst_ command syntax is shown in the example below:

COMMAND <parameter> [option]

Tst_ command examples

Command example	Command description
>TST 4 r	Perform a test on the HCMIC or IOP CP
>TST 5 r	Perform a test on the HIOP or IOP CP
>TST 5 r nowait	Perform a test on the HIOP or IOP CP. Display the MAP prompt and continue with other MAP tasks.

Uneq

Menu selection number

12

Type

Operational

Description

Use the uneq command to remove an HIOP CP or an HCMIC CP or an IOP CP from the inventory. The CP must first be physically removed from the shelf.

Limitations and restrictions

The following limits and restrictions apply to the uneq command:

- This command is applicable to IOP circuit packs only if those circuit packs contain AMDI or ETHR packlets.
- Remove the circuit pack from the slot before entering the uneq command.

Syntax

When used on the IO MAP level, the uneq command requires command parameters to specify slot and side. If you do not enter any parameters or you enter invalid parameters, the MAP terminal displays an error message. The MAP terminal prompts you to enter a correct parameter value.

IO MAP level (end)

nn
Use the <nn> (slot number) parameter value to indicate the number of the physical shelf slot - 1 to 18 for the front plane, 4 to 15 for the rear plane.

s
Use the <s> (side) parameter value to indicate the CP location in the physical shelf - front (f) or rear (r).

Options

There are no command options.

XACMtc

The XACMtc command is a non-menu command. The XACMtc command instructs the XA-Core system to display the XA-Core maintenance (XACMtc) MAP level.

Menu selection number

The IO MAP does not display an XACMtc menu number.

Type

Navigational

Parameters

There are no command parameters.

Options

There are no command options.

Command format examples

Example use of the XACMtc command is shown in Table "XACMtc command example". The XACMtc command syntax is shown in the example below:

COMMAND

XACMtc command example

Command example	Command description
>XACMTC	Exit from the current MAP session and display the XACMtc MAP level.

AMDI MAP level

Introduction

Use the XA-Core ATM multi-node data interface (AMDI) MAP to perform maintenance actions on the XA-Core AMDI packlets, on AMDI links supported by AMDI packlets, and on AMDI links supported by HIOP circuit packs. Select the AMDI option from any XA-Core MAP level to display the XA-Core AMDI MAP level.

AMDI MAP level

The AMDI MAP level is an interface that allows operating company personnel to monitor and perform system maintenance activities. The command interpreter output area displays the location of the AMDI components and the working state of AMDI packlets and links.

All AMDI links must be supported by AMDI packlets, or all such links must be supported by HIOP circuit packs. The following MAP illustrations show both cases. If the AMDI links are handled by HIOP circuit packs, the packlet-location and packlet-state fields are blank.

AMDI MAP level, assuming that all AMDI links are handled by AMDI packlets

```
 XAC        MS       IOD      Net       PM      CCS      Lns     Trks     Ext      APPL
 .          .        .        .         .       .        .       .        .        .

AMDI            Front:   111111111  Rear: 111111     SM    PE    IO     PKLT
 0 Quit         123456789012345678  456789012345     .     .     .      .
 2             Sta:-.-.--..-..-.--.-.  ....-..-....     0     0     0      0
 3             Dep:
 4             Typ:                      **      **
 5             Slot: Side: Packlet:  Status:  Port0: Port1:  Link0: Link1:
 6 Tst_          5   Rear  Lower     .                        .      -
 7 Bsy_          6   Rear  Lower     .                        .      -
 8 RTS_         13   Rear  Lower     .                        .      -
 9              14   Rear  Lower     .                        .      -
10 LoadFW_     XAC:
11             AMDI:
12 Uneq_
13
14 Alarm_
15 Cntrs_
16
17 Indicat_
18 Query_
 XMAP0
Time  14:12   >
```

AMDI MAP level (continued)

AMDI MAP level, assuming that all AMDI links are handled by HIOP circuit packs

```
 XAC       MS      IOD     Net      PM     CCS     Lns    Trks    Ext     APPL
 .         .       .       .        .      .       .      .       .       .

AMDI            Front:   111111111  Rear: 111111     SM    PE    IO     PKLT
 0 Quit         123456789012345678  456789012345     .     .     .      .
 2            Sta:-.-.--..-..-.--.-.  ..-.-..-.-..    0     0     0      0
 3            Dep:
 4            Typ:                     *        *
 5            Slot: Side: Packlet:  Status:  Port0: Port1:  Link0: Link1:
 6 Tst_         5   Rear                      .      .       .      .
 7 Bsy_        14   Rear                      .      .       .      .
 8 RTS_       XAC:
 9            AMDI:
10 LoadFW_
11
12 Uneq_
13
14 Alarm_
15 Cntrs_
16
17 Indicat_
18 Query_
 XMAP0
Time  14:12   >
```

AMDI menu commands

Menu commands appear on the MAP command menu. Non-menu commands do not appear on the MAP menu list. Enter both menu and non-menu commands in the command interpreter input area.

Table "Summary of AMDI MAP commands" contains a summary description of AMDI MAP level commands.

Summary of AMDI MAP commands (Sheet 1 of 2)

Command	Menu #	Type	Function
Abtk	Non-menu	Op	Abort last AMDI MAP level request
Alarm_	14	Op/Info	Enable, disable or query alarm notifications
Bsy_	7	Op	Place the AMDI packlet, port, or link in ManB state
CMIC	Non-menu	Nav	Display the CMIC MAP level
Cntrs_	15	Info	Display the non-zero system-busy (SysB) transition counters, or reset the SysB transition counters for a specified component
Disk	Non-menu	Nav	Display the Disk MAP level

AMDI MAP level (continued)

Summary of AMDI MAP commands (Sheet 2 of 2)

Command	Menu #	Type	Function
ETHR	Non-menu	Nav	Display the ETHR MAP level
Indicat_	17	Info	Cause a CP or packlet LED to wink or clear
IO	Non-menu	Nav	Display the IO MAP level
LoadFW_	10	Op	Triggers the firmware upgrade process
PE	Non-menu	Nav	Display the PE MAP level
Query_	18	Info	List information for any CP or packlet
Quit	0	Nav	Exit from the MAP level now on display and display the XAC MAP level
RTIF	Non-menu	Nav	Display the RTIF MAP level
RTS_	8	Op	Test and return an AMDI packlet, port, or link to service
SM	Non-menu	Nav	Display the SM MAP level
Tape	Non-menu	Nav	Display the Tape MAP level
Tst_	6	Op	Perform a test on an AMDI packlet, port, or link
Uneq_	12	Op	Unequip an AMDI packlet or an AMDI link
XACMtc	Non-menu	Nav	Display the XACMtc MAP level

Abtk

The Abtk command is a non-menu command that allows the user to abort the last request made from the AMDI level.

Menu selection number

The AMDI MAP level does not display a Abtk menu number.

Type

Operational

Parameters

The Abtk command requires command parameters. If you do not enter any parameters or you enter invalid parameters, the MAP terminal prompts you to enter a correct parameter value.

AMDI MAP level (continued)

The Abtk command must use the same device that the command being aborted was issued to.

Options

There are no command options.

Command format examples

Example use of the Abtk command is shown in Table "Abtk command examples". The Abtk command syntax is shown in the example below:

COMMAND

Abtk command examples

Command example	Command description
>Abtk 14 r l	Abort the last request made from the AMDI level

Alarm_

The Alarm_ command is a common menu command that allows you to perform the following tasks:

- permit notification for selected alarms
- disable notification for selected alarms
- query the XA-Core system to identify alarm conditions or examine the status of alarms

Menu selection number

14

Type

Operational or Informational

Parameters

The Alarm_ command requires command parameters. If you do not enter any parameters or you enter invalid parameters, the MAP terminal prompts you to enter a correct parameter value. The Alarm_ command requires at least one of the following command parameters.

Alarm_name

Use the <alarm_name> parameter to indicate the name of the XA-Core system alarm. You can use the <alarm_name> parameter with the <disable> and <enable> parameters.

All

Use the <all> parameter to enable or disable notification for all alarms (use with the <enable> or <disable> parameter).

Disable

Use the <disable> parameter to prevent the XA-Core system from displaying alarm notification messages on the MAP screen. You can disable either one alarm at a time or all alarms. Use the <disable> parameter with the Alarm_ command and <alarm_name> parameter to disable a single alarm. Use the <disable> parameter with the <all> parameter to disable all XA-Core alarms. The <disable> parameter remains active until you enable the alarm or the system performs a restart.

Enable

Use the <enable> parameter to instruct the XA-Core system to display an alarm notification message on the MAP terminal. You can enable either one alarm or all alarms. Use the <enable> parameter together with the Alarm_ command and <alarm_name> parameter to enable a single alarm. Use the <enable> parameter with the <all> parameter to enable all XA-Core alarms.

Raised

Use the <raised> parameter to display all active alarms, the alarm severity and enabled/disabled status. You can use the <raised> parameter with the [enabled] or [disabled] options. If you do not enter any options, the XA-Core system MAP displays all active, enabled and disabled alarms.

Options

You can enter one of the following command options in the command statement.

Disabled

Use the [disabled] option with the <raised> parameter. The option instructs the XA-Core system to display all active alarms that have a disabled status.

Enabled

Use the [enabled] option with the <raised> parameter. The option instructs the XA-Core system to display all active alarms that have an enabled status.

Command format examples

Example use of the Alarm_ command is shown in Table "Alarm_ command examples". The Alarm_ command syntax is shown in the example below:

AMDI MAP level (continued)

COMMAND <parameter> [option]

Alarm_ command examples

Command example	Command description
>ALARM tape	ALARM <alarm_name>: Display the alarm severity and status for a single alarm.
>ALARM all	ALARM <all>: Display the alarm severity and status for all alarms.
>ALARM all disable	ALARM <all> <disable>: Disable notification for all alarms.
>ALARM tape disable	ALARM <alarm_name> <disable>: Disable notification for a single alarm.
>ALARM all enable	ALARM <all> <enable>: Enable notification for all alarms.
>ALARM tape enable	ALARM <alarm_name> <enable>: Enable notification for a single alarm.
>ALARM raised	ALARM <raised>: Display all active alarms
>ALARM raised enabled	ALARM <raised> [enabled]: Display active alarms that have an enabled status
>ALARM raised disabled	ALARM <raised> [disabled]: Display active alarms that have an disabled status

Bsy_

The Bsy_ command places an InSv, IsTb, SysB or CBsy AMDI packlet or device (a port or a link) in a ManB state. If placing a packlet, port, or link in a ManB state results in a major alarm, the force option must be used. If the ManB state results in a critical alarm, the XA-Core system rejects the Bsy_ command even with the force option.

If the Bsy_ command applies to an AMDI packlet, it will affect the state of the port and link. If the command applies to a port, it will affect the state of the link.

You can apply this command to AMDI packlets, to AMDI links on AMDI packlets, and to AMDI ports and links on HIOP CPs.

Menu selection number

7

Type

Operational

Parameters

The Bsy_ command requires command parameters. If you do not enter any parameters or you enter invalid parameters, the MAP terminal displays an error message. The MAP terminal prompts you to enter a correct parameter value. The command parameters are as follows.

nn

The <nn> (slot number) parameter is always required. The value indicates the number of the physical shelf slot - 1 to 18 for the front plane, 4 to 15 for the rear plane.

s

The <s> (side) parameter is always required. The value indicates the location in the physical shelf - front (f) or rear (r).

p

The <p> (position) parameter is required only if you are applying the command to an AMDI packlet, or to a link supported by an AMDI packlet. The value indicates the packlet location, upper (u) or lower (l).

device

Use the optional [device] parameter to indicate that the command applies to a device. You can use the Bsy_ command on the following AMDI devices: link0 or link 1 on an AMDI packlet; port0, port1, link0, or link1 on the AMDI section of an HIOP circuit pack.

Options

You can enter the following command options in the command statement.

Force

The [force] option instructs the XA-Core system to bypass redundancy checks and continue to execute the command. Use the [force] option with caution.

AMDI MAP level (continued)

Noprompt

Use the [noprompt] option to bypass system prompts and continue to execute the command. Use the [noprompt] option with caution. System messages and prompts help the user prevent loss of information.

Format examples

Example use of the Bsy_ command is shown in Table "Bsy_ command examples". The Bsy_ command syntax is shown in the example below:

COMMAND <parameter> [option]

Bsy_ command examples

Command use	Command description
>BSY 14 r u	BSY <nn> <s> <p>: Place an AMDI packlet in a ManB state.
>BSY 14 r port0	BSY <nn> <s> <device>: Place an AMDI port on an HIOP CP in a ManB state.
>BSY 14 r u link0	BSY <nn> <s> <p> <device>: Place an AMDI link supported by an AMDI packlet in a ManB state.
>BSY 14 r link0	BSY <nn> <s> <device>: Place an AMDI link supported by an HIOP CP in a ManB state.
>BSY 14 r u force	BSY <nn> <s> <p> [force]: Place an AMDI packlet in a ManB state. Ignore reduced redundancy conditions.
>BSY 14 r u noprompt	BSY <nn> <s> <p> [noprompt]: Place an AMDI packlet in a ManB state. Block warning/prompt messages.
>BSY 14 r u force noprompt	BSY <nn> <s> <p> [force] [noprompt]: Place an AMDI packlet in a ManB state. Ignore possible error conditions. Block warning/prompt messages.

CMIC

The CMIC command is a non-menu command. The CMIC command instructs the XA-Core system to display the CMIC MAP level.

Menu selection number

The AMDI MAP level does not display a CMIC menu number.

Type

Navigational

Parameters

There are no command parameters.

Options

There are no command options.

Command format examples

Example use of the CMIC command is shown in Table "CMIC command examples". The CMIC command syntax is shown in the example below:

COMMAND

CMIC command examples

Command example	Command description
>CMIC	Exit from the current MAP session and display the CMIC MAP level.

Cntrs_

The Cntrs_ command instructs the XA-Core system to either display the current values of all non-zero system-busy (SysB) transition counters, or to reset to zero the SysB transition counters for a specified component. A SysB transition counter counts the number of times that a component's state changes from in-service to system-busy.

The system maintains separate SysB transition counters for each instance of each of the following components:

- IOP, HIOP, and HCMIC circuit packs
- all packlets: disk, tape, CMIC, RTIF, Ethernet, and AMDI
- sections of HIOP circuit packs that are supporting ETHR and AMDI connections
- sections of HCMIC circuit packs that are supporting CMIC, RTIF, and ETHR connections
- time-of-day (TOD) devices
- ports

AMDI MAP level (continued)

For each component, the system counts the SysB transitions that occur during the current six-hour interval. It also remembers the totals from the seven preceding six-hour intervals. It sums the totals from the seven preceding intervals and the current interval, to obtain the total number of SysB transitions occurring during a 42-to-48-hour period.

The monitored components are divided into groups and for each group there are minor and major threshold values. The minor and major thresholds are for a 42-to-48-hour period. If a component's total number of SysB transitions for the 42-to-48-hour period equals or exceeds the minor threshold for its component group, and if a SysBTh minor or major alarm is not already in effect, the system raises a SysBTh minor alarm (unless the alarm has been disabled). If a component's total number of SysB transitions for the 42-to-48-hour period equals or exceeds the major threshold for its component group, and if a SysBTh major alarm is not already in effect, the system raises a SysBTh major alarm (unless the alarm has been disabled). For information on the component groups, see the description of the "Query" parameter, below. For information on the SysBTh minor and major alarms and for information on disabling alarms, see the *XA-Core Maintenance Manual*, 297-8991-510.

Menu selection number

15

Type

Informational

Parameters

The Cntrs_ command requires either the <query> parameter or the <reset> parameter.

If you use the <query> parameter, no other parameters are permitted.

If you use the <reset> parameter, you must use additional parameters to specify a component: The <nn> and <s> parameters are required in all CNTRS RESET commands. The <p> parameter is required in some CNTRS RESET commands. The <device> parameter is required in some CNTRS RESET commands.

Query

The <query> parameter instructs the XA-Core system to display the following information.

- Either the value of all system-busy (SysB) transition counters that are greater than zero, or the message: `No SysB transitions on any components in the last 42-48 hrs.` A SysB transition counter

counts the number of times that a component goes from the in-service state to the SysB state. For a list of the components for which the system maintains SysB transition counters, see the beginning of this "Cntrs_" section. The system maintains a separate SysB transition counter for each instance of each listed component, for example, for each TOD device. For each component, the system counts the SysB transitions that occur during the current six-hour interval. It also maintains a record of the totals from the seven preceding six-hour intervals. It sums the totals from the seven preceding intervals and the current interval, to obtain the total number of SysB transitions occurring during a 42-to-48-hour period.

- The values of the minor and major thresholds for each component group. (Component groups are described below.) The thresholds are shown in an output line that resembles the following:

  SysBTh thresholds: (Min/Maj): PE=2/6; SM=2/4; IOhw=2/6; IOlk=2/8

  > ***Note:*** The threshold values shown in the example are for illustrative purposes only. If the values shown in the example differ from the output of the CNTRS QUERY command, you should regard the command output as correct.

  For each component group, a slash separates the minor and major threshold values. For example, “SM=2/4” means that the minor threshold for the SM group is 2, and the major threshold is 4.

  The minor and major thresholds are for a 42-to-48-hour period. If a component’s total number of SysB transitions for the 42-to-48-hour period equals or exceeds the minor threshold for that group, and if a SysBTh minor or major alarm is not already in effect, the system raises a SysBTh minor alarm (unless the alarm has been disabled). If a component’s total number of SysB transitions for the 42-to-48-hour period equals or exceeds the major threshold for that group, and if a SysBTh major alarm is not already in effect, the system raises a SysBTh major alarm (unless the alarm has been disabled). For information on the SysBTh minor and major alarms and for information on disabling alarms, see the *XA-Core Maintenance Manual*, 297-8991-510.

  The component groups are as follows.

  — The PE group includes PE circuit packs.

  — The SM group includes SM circuit packs.

  — The IO link (IOlk) group includes IO links.

  — The IO hardware (IOhw) group includes IOP, HIOP, and HCMIC circuit packs, all packlets, sections of HIOP circuit packs that are supporting ETHR and AMDI connections, sections of HCMIC circuit

AMDI MAP level (continued)

packs that are supporting RTIF, ETHR, and CMIC connections, time-of-day (TOD) devices, and ports.

Reset

The <reset> parameter instructs the system to reset to zero the value of the system-busy (SysB) transition counters for a specific component. The parameters following the <reset> parameter specify the component.

Use the <reset> parameter with the <nn> and <s> shelf location parameters for a circuit pack or with the <nn>, <s>, and <p> shelf location parameters for a packlet. With the <reset> parameter, use the <device> parameter to identify a port or a link or a time-of-day device (TOD).

Note 1: Ordinarily, you should use the <reset> parameter only for links. Use it after you have corrected a link fault, to reset the SysB transition counters for the link.

Note 2: Ordinarily, for all components other than links, you should let the system reset the counters automatically. The system resets a component's counters automatically when you replace the component. Alternatively, if the SysB transitions stop occurring, the counters will revert to zero after seven six-hour intervals. At the beginning of each six-hour interval, the system starts a six-hour transition counter at zero and it adjusts the 42-to-48-hour total to reflect the seven preceding six-hour intervals. If the component goes through seven consecutive six-hour intervals without a SysB transition, all the counters revert to zero.

nn

Use the <nn> (slot number) parameter value to indicate the number of the physical shelf slot where a CP or packlet is located - 1 to 18. The component could be the CP or packlet, or it could be a device on the CP or packlet. The <nn> parameter is required in all cases.

s

Use the <s> (side) parameter value to indicate the location in the physical shelf of a CP or packlet - front (f) or rear (r). The component could be the CP or packlet, or it could be a device on the CP or packlet. The <s> parameter is required in all cases.

p

Use the <p> (position) parameter value to indicate the packlet location in an input/output processor (IOP) - upper (u) or lower (l). The <p> parameter is required if the component is a packlet or a device on a packlet.

Device

Use the <device> parameter if the component is a link, a port, or a TOD device.

Options

There are no command options.

Command format examples

Example use of the Cntrs_ command is shown in Table "Cntrs_ command examples". The Cntrs_ command syntax is shown in the example below.

COMMAND <parameter>

Cntrs_ command examples (Sheet 1 of 2)

Command example	Command description
>Cntrs query	CNTRS QUERY: Display the values of all non-zero SysB transition counters, and display the minor and major threshold values.
>Cntrs reset 14 r	CNTRS RESET <nn> <s>: Reset the SysB transition counter for the circuit pack in slot 14R (an IOP or HIOP circuit pack).
>Cntrs reset 15 r u	CNTRS RESET <nn> <s> <p>: Reset the SysB transition counter for the packlet in slot 15R, upper (a CMIC packlet).
>Cntrs reset 6 r u link	CNTRS RESET <nn> <s> <p> <device>: Reset the SysB transition counter for the link on the ethernet packlet in slot 6R, upper.
>Cntrs reset 4 r l port0	CNTRS RESET <nn> <s> <p> <device>: Reset the SysB transition counter for port0 (the local port) on the RTIF packlet in slot 4R, lower.
>Cntrs reset 13 r l link0	CNTRS RESET <nn> <s> <p> <device>: Reset the SysB transition counter for link0 on the AMDI packlet in slot 13R, lower.
>Cntrs reset 14 r link1	CNTRS RESET <nn> <s> <device>: Reset the SysB transition counter for link1 on the AMDI section of the HIOP circuit pack in slot 14R.

AMDI MAP level (continued)

Cntrs_ command examples (Sheet 2 of 2)

Command example	Command description
>Cntrs reset 15 r tod0	CNTRS RESET <nn> <s> <device>: Reset the SysB transition counter for the tod0 time-of-day device on the CMIC section of the HCMIC circuit pack in slot 15R.

Disk

The Disk command is a non-menu command. The Disk command instructs the XA-Core system to display the Disk MAP level.

Menu selection number

The AMDI MAP level does not display a Disk menu number.

Type

Navigational

Parameters

There are no command parameters.

Options

There are no command options.

Command format examples

Example use of the Disk command is shown in Table "Disk_ command examples". The Disk command syntax is shown in the example below:

COMMAND

Disk_ command examples

Command example	Command description
>DISK	Exit from current MAP session and display the Disk MAP level

ETHR

The ETHR command is a non-menu command. The ETHR command instructs the XA-Core system to display the ETHR MAP level.

Menu selection number

The AMDI MAP level does not display an ETHR menu number.

Type

Navigational

Parameters

There are no command parameters.

Options

There are no command options.

Command format examples

Example use of the ETHR command is shown in Table "ETHR command examples". The ETHR command syntax is shown in the example below:

COMMAND

ETHR command examples

Command example	Command description
>ETHR	Exit from the current MAP session and display the ETHR MAP level.

Indicat_

The Indicat_ command is a common command. The command causes LEDs on CPs or packlets to wink or illuminate. The command allows you to locate a device on the physical shelf or to make sure all LEDs work. CPs and packlets must be in a ManB state before you use the Indicat_ card command.

Note: If you use the Indicat_ command with the <test> or <testall> parameters, CPs and packlets do not have to be in a ManB state.

Menu selection number

17

Type

Informational

Parameters

The Indicat_ command requires parameters. If you do not enter any parameters or you enter invalid parameters, the MAP terminal displays an error message. The MAP terminal prompts you to enter a correct parameter value.

AMDI MAP level (continued)

The Indicat_ command requires at least two of the shelf location parameters. In addition to the shelf location parameters, you can enter one of the following parameters.

Card

Use the <card> parameter to cause the red triangular LED of a SysB (system busy) or ManB CP or packlet to wink. You can use the [timer] option with the <card> parameter.

Clear

Use the <clear> parameter to return LEDs to a normal working state on a single winking or testing CP or packlet. Use the <clear> parameter with the shelf location parameters.

Clearall

Use the <clearall> parameter to return all winking or testing LEDs on all CPs or packlets to a normal working state.

Test

Use the <test> parameter to light the all LEDs on a single CP or packlet. The CP or packlet does not have to be in a ManB state. LEDs already winking on other CPs or packlets continue to wink. Use the <test> parameter with the shelf location parameters. You can use the <test> parameter with the [timer] option.

Testall

Use the <testall> parameter to light all LEDs on all CPs and packlets. The CPs and packlets do not have to be in a ManB state. LEDs already winking on other CPs or packlets continue to wink. You can use the <testall> parameter with the [timer] option. Do not use the shelf location parameters with the <testall> parameter.

nn

Use the <nn> (slot number) parameter value to indicate the number of the physical shelf slot - 1 to 18 for the front plane, 4 to 15 for the rear plane.

s

Use the <s> (side) parameter value to indicate the CP or packlet location in the physical shelf - front (f) or rear (r).

p

Use the <p> (position) parameter value to indicate the packlet location in an input/output processor (IOP) - upper (u) or lower (l).

Options

You can enter the following option in the command statement.

Timer

Use the [timer] option to indicate the time (in minutes) to light or wink LEDs. The XA-Core system turns the LEDs off when the time expires. The minimum time period is 1 min. The maximum time period is 999 min. If you do not define a time period, the default time period is 120 min.

Use the [timer] option as follows:

- use the [timer] option with the <card> parameter to wink a red LED on a single CP or packlet for a period of time.
- use the [timer] option with the <test> parameter to light the red LED on a CP or packlet for a period of time.
- use the [timer] option with the <testall> parameter to light the red LED on all CPs and packlets for a period of time.

Command format examples

Example use of the Indicat_ command is shown in Table "Indicat_ command examples". The Indicat_ command syntax is shown in the example below:

COMMAND <parameter> [option]

Indicat_ command examples (Sheet 1 of 2)

Command example	Command description
>INDICAT card 4 r u	INDICAT <card> <nn> <s> <p>: Wink red LED on a single ManB packlet.
>INDICAT card 4 r u 5	INDICAT <card> <nn> <s> <p> [timer]: Wink red LED on a single ManB packlet for 5 min.
>INDICAT clear 4 r u	INDICAT <clear> <nn> <s> <p>: Return LEDs on a single packlet to a normal working state.
>INDICAT clearall	INDICAT <clearall>: Return all LEDs on all CPs and packlets to a normal working state.
>INDICAT test 4 r 5	INDICAT <test> <nn> <s> [timer]: Light all LEDs on a single CP for 5 min. If the command does not include the [timer] option, the XA-Core default time value is 120 min.

AMDI MAP level (continued)

Indicat_ command examples (Sheet 2 of 2)

Command example	Command description
>INDICAT testall 5	INDICAT <testall> [timer]: Light all LEDs on all CPs and packlets for 5 min. The amber LEDs on the shelf interface modules (SIM) CPs do not light. The <test> parameter does not cause an audible alarm nor alarm notification on the MAP terminal. CPs or packlets now under test continue to wink
>INDICAT testall	INDICAT <testall>: Light all LEDs on all CPs and packlets for 120 min.

IO

The IO command is a non-menu command. The IO command instructs the XA-Core system to display the IO MAP level.

Menu selection number

The AMDI MAP level does not display an IO menu number.

Type

Navigational

Parameters

There are no command parameters.

Options

There are no command options.

Command format examples

Example use of the IO command is shown in Table "IO command example". The IO command syntax is shown in the example below:

COMMAND

IO command example

Command example	Command description
>IO	Exit from the current MAP session and display the IO MAP level

LoadFW_

The LoadFW_ command triggers the firmware upgrade process for an AMDI packlet.

Menu selection number

10

Type

Operational

Parameters

The LoadFW_ command requires command parameters. If you do not enter any parameters or you enter invalid parameters, the MAP terminal displays an error message. The MAP terminal prompts you to enter a correct parameter value.

nn

Use the <nn> (slot number) parameter value to indicate the number of the physical shelf slot - 1 to 18 for the front plane, 4 to 15 for the rear plane.

s

Use the <s> (side) parameter value to indicate the packlet location in the physical shelf - front (f) or rear (r).

p

Use the <p> (packlet) parameter value to indicate the packlet location in the input/output processor (IOP) circuit pack - upper (u) or lower (l).

FILE new or FILE current

Use the FILE keyword to indicate that the firmware to be downloaded is to be found in a file. Use the <new> or <current> parameter to instruct the XA-Core system to reload the current firmware or load new firmware. (The data-schema table XAFWLOAD lists the current and new firmware loads for the packlet.)

Options

There are no command options.

Command format examples

The LoadFW command syntax is shown below. Example use of the LoadFW_ command is shown in the following table.

AMDI MAP level (continued)

COMMAND <parameters>

LoadFW_ command examples

Command example	Command description
>LoadFW 13 r u FILE current	Upgrade the firmware in the packlet at 13R, upper. Use the current load (as identified in table XAFWLOAD) as the source.

Responses

The following table explains possible responses to the LoadFW_ command.

MAP responses with associated meanings and actions

Command:	**>loadfw 4 f file new**
MAP response:	`LoadFW 4 f failed`
Meaning:	The LoadFW_ command has failed or been rejected.
Reason:	The MAP displays the reason for the failure. (For a list of possible reasons, see the description of log XAC333 in the chapter, “Understanding XA-Core log reports”.) Record the reason.
Action:	If major faults or the message NO VALID FW IN FLASH appears, load current firmware manually. For minor faults where the system recovers successfully, perform the actions listed on the MAP screen.

PE

The PE command is a non-menu command. The PE command instructs the XA-Core system to display the XA-Core processor element (PE) MAP level.

Menu selection number

The AMDI MAP level does not display a PE menu number.

Type

Navigational

Parameters

There are no command parameters.

Options

There are no command options.

Command format examples

Example use of the PE command is shown in Table "PE command example". The PE command syntax is shown in the example below:

COMMAND

PE command example

Command example	Command description
>PE	Exit from the current MAP session and display the PE MAP level.

Query_

The Query_ command is a common command. The Query_ command causes the MAP terminal to display the following information for a single CP or packlet:

- the product engineering code (PEC)
- the hardware release
- the baseline hardware release (as specified in table PECINV)
- whether the hardware is compatible with the baseline and exception specifications (specifications found in table PECINV)
- the serial number
- the version of the current FW firmware load (the load that is in the circuit pack)
- the baseline FW firmware version (as specified in table FWINV)
- whether the current FW firmware load is compatible with the baseline and exception specifications (specifications found in table FWINV)
- the hardware/software vintage
- the full ROM version, that is, the full identification of the current FW firmware load (including the version code and any extensions)

The parameters determine the type of information displayed.

Menu selection number

18

Type

Informational

AMDI MAP level (continued)

Parameters

The Query_ command requires command parameters. If you do not enter any parameters or you enter invalid parameters, the MAP terminal displays an error message. The MAP terminal prompts you to enter a correct parameter value.

If you use the Query_ command with the <card> parameter, enter the shelf location parameters. If you use the Query_ command with the <type> parameter or with the <shelf> parameter, do not enter the shelf location parameters.

Card

Use the <card> parameter to instruct the XA-Core system to perform a query on a CP or packlet. Display the description to the MAP terminal. You must use the <card> parameter with the CP or packlet shelf location parameters.

nn

Use the <nn> (slot number) parameter value to indicate the number of the physical shelf slot - 1 to 18 for the front plane, 4 to 15 for the rear plane.

s

Use the <s> (side) parameter value to indicate the CP or packlet location in the physical shelf - front (f) or rear (r).

p

Use the <p> (position) parameter value to indicate the packlet location, upper (u) or lower (l).

Shelf

Use the <shelf> parameter to instruct the XA-Core system to retrieve information about all the components installed in the shelf. The <shelf> parameter retrieves the information you would obtain by entering the Query card command for every circuit pack and packlet in the XA-Core.

Subsystem_name

Use the <subsystem_name> parameter to indicate the name of a subsystem. The value of the subsystem name is either SM, PE, or IO. Use the <subsystem_name> parameter only with the <type> parameter.

Type

Use the <type> parameter to indicate that the query applies to a subsystem of type SM, PE, or IO. Use the <type> parameter with the <subsystem name> parameter. The MAP terminal displays the location of all CPs that match the subsystem type. Do not enter shelf location parameters.

Options

There are no command options.

Command format examples

Example use of the Query_ command is shown in Table "Query_ command examples". The Query_ command syntax is shown in the example below:

COMMAND <parameter>

Query_ command examples

Command example	Command description
>QUERY card 4 r	QUERY <card> <nn> <s>: Display the PEC, serial number, insertion/activation dates software load, firmware version and working state for the CP.
>QUERY card 7 r u	QUERY <card> <nn> <s> <p>: Display the PEC, serial number, insertion/ activation dates, software load, firmware version and working state for the packlet.
>QUERY shelf	QUERY <shelf>: Display the PEC, serial number, insertion/activation dates, software load, firmware version, and working state for every CP and packlet in the shelf.
>QUERY type io	QUERY <type> <subsystem_name>: Display subsystem name and location of all CPs and packlets that match the subsystem type.

Quit

The Quit command is a common command. The Quit command instructs the XA-Core system to exit from the current MAP session. You can exit to any MAP level that is higher in the MAP level hierarchy.

Note: The XA-Core system continues to execute any previous commands entered.

Menu selection number

0

AMDI MAP level (continued)

Type

Navigational

Parameters

The Quit command parameters are optional.

All

Use the <all> parameter to terminate all XA-Core MAP sessions and display the CI prompt.

Incrname

Use the <incrname> parameter to end the current MAP session and display a MAP level higher in the MAP system hierarchy. Enter a MAP level name. The XA-Core system displays the MAP level that is one level higher in the MAP system hierarchy than the <incrname> (increment name) value.

Nlevel

Use the <nlevel> parameter to end the current MAP session and display a MAP level higher in the MAP system hierarchy. Enter a number value to represent the number of DMS MAP levels to step back in the MAP system hierarchy.

Options

There are no command options.

Command format examples

Example use of the Quit command is shown in Table "Quit command examples". The Quit command syntax is shown in the example below:

COMMAND <parameter>

Quit command examples (Sheet 1 of 2)

Command example	Command description
>QUIT	Use the Quit command with no parameters to exit from the current MAP session. Display a MAP level that is one level above the current MAP session level.
>QUIT mtc	QUIT <incrname>: Exit the current MAP session. Display the MAP level that is one level above the indicated MAP level name.

Quit command examples (Sheet 2 of 2)

Command example	Command description
>QUIT 2	QUIT <nlevel>: Exit the current MAP session. Display the MAP level that is two levels above the current MAP session in the MAP hierarchy.
>QUIT all	QUIT <all>: Exit from all MAP sessions and display the CI prompt.

RTS_

The RTS_ command instructs the XA-Core system to test a ManB or SysB packlet or device (a port or a link), and return the packlet or device to service.

You can apply this command to AMDI packlets, to AMDI links on AMDI packlets, and to AMDI ports and links on HIOP CPs.

Menu selection number

8

Type

Operational

Parameters

The RTS_ command requires parameters. If you do not enter any parameters or you enter invalid parameters, the MAP terminal displays an error message. The MAP terminal prompts you to enter a correct parameter value.

The command parameters are as follows.

nn

The <nn> (slot number) parameter is always required. The value indicates the number of the physical shelf slot - 1 to 18 for the front plane, 4 to 15 for the rear plane.

s

The <s> (side) parameter is always required. The value indicates the location in the physical shelf - front (f) or rear (r).

p

The <p> (position) parameter is required only if you are applying the command to an AMDI packlet, or to a link supported by an AMDI packlet. The value indicates the packlet location, upper (u) or lower (l).

AMDI MAP level (continued)

device

Use the optional [device] parameter to indicate that the command applies to a device. You can use the Bsy_ command on the following AMDI devices: link0 or link 1 on an AMDI packlet; port0, port1, link0, or link1 on the AMDI section of an HIOP circuit pack.

Options

You can enter the following options in the command statement.

Nowait

Use the [nowait] option with the RTS_ command. Display the MAP prompt to allow you to enter other commands while the system returns the RTIF or device to service.

Command format examples

Example use of the RTS command is shown in Table "RTS command examples". The RTS command syntax is shown in the example below:

COMMAND <parameter> [option]

RTS command examples (Sheet 1 of 2)

Command example	Command description
>RTS 4 r u	RTS <nn> <s> <p>: Test the AMDI packlet and return it to service.
>RTS 4 r u nowait	RTS <nn> <s> <p> [nowait]: Test the AMDI packlet and return it to service. Display the MAP prompt and enter other commands.
>RTS 14 r port0	RTS <nn> <s> <device>: Test an AMDI port on an HIOP CP, and return the port to service.
>RTS 14 r u link0	RTS <nn> <s> <p> <device>: Test an AMDI link supported by an AMDI packlet, and return the link to service.
>RTS 14 r link1	RTS <nn> <s> <device>: Test an AMDI link supported by an HIOP CP, and return the link to service.

RTS command examples (Sheet 2 of 2)

Command example	Command description
>RTS 14 r u link1 nowait	RTS <nn> <s> <p> <device> [nowait]: Test the ethernet link supported by an ethernet packlet, and return the link to service. Display the MAP prompt and enter other commands.

SM

The SM command is a non-menu command. The SM command instructs the XA-Core system to display the shared memory (SM) MAP level.

Menu selection number

The AMDI MAP does not display an SM menu number.

Type

Navigational

Parameters

There are no command parameters.

Options

There are no command options.

Command format examples

Example use of the SM command is shown in Table "SM command example". The SM command syntax is shown in the example below:

COMMAND

SM command example

Command example	Command description
>SM	Exit from the current MAP session and display the SM MAP level.

Tape

The Tape command is a non-menu command. The Tape command instructs the system to display the XA-Core Tape MAP.

AMDI MAP level (continued)

Menu selection number

The AMDI MAP does not display a Tape menu number.

Type

Navigational

Parameters

There are no command parameters.

Options

There are no command options.

Command format examples

Example use of the Tape command is shown in Table "Tape command example". The Tape command syntax is shown in the example below:

COMMAND

Tape command example

Command example	Command description
>TAPE	Exit from current MAP session and display the Tape MAP level

Tst_

The Test (Tst) command performs a test on the AMDI packlet or device (a port or a link). The type of test depends on the working state (in-service or out-of-service) of the AMDI packlet or device.

You can apply this command to AMDI packlets, to AMDI links on AMDI packlets, and to AMDI ports and links on HIOP CPs.

An in-service test performs non-destructive tests. An out-of-service test performs non-destructive and destructive tests.

Menu selection number

6

Type

Operational

Parameters

The Tst_ command requires command parameters. If you do not enter any parameters or you enter invalid parameters, the MAP terminal displays an error message. The MAP terminal prompts you to enter a correct parameter value.

The Tst_ command requires the following command parameters.

nn

Use the <nn> (slot number) parameter value to indicate the number of the physical shelf slot - 1 to 18 for the front plane and 4 to 15 for the rear plane.

s

Use the <s> (side) parameter value to indicate the packlet location in the physical shelf - front (f) or rear (r).

p

The <p> (position) parameter is required only if you are applying the command to an AMDI packlet, or to a link supported by an AMDI packlet. The value indicates the packlet location, upper (u) or lower (l).

device

Use the optional [device] parameter to indicate that the command applies to a device. You can use the Bsy_ command on the following AMDI devices: link0 or link 1 on an AMDI packlet; port0, port1, link0, or link1 on the AMDI section of an HIOP circuit pack.

Options

You can use the following command option in the command statement.

Nowait

Use the [nowait] option with the Tst_ command. Display the MAP prompt to allow you to enter other commands while the system performs the tests.

Command format examples

Example use of the Tst_ command is shown in Table "Tst_ command examples". The Tst_ command syntax is shown in the example below:

AMDI MAP level (continued)

COMMAND <parameter> [option]

Tst_ command examples

Command example	Command description
>TST 4 r u	TST <nn> <s> <p>: Perform a test on the indicated AMDI packlet.
>TST 4 r u nowait	TST <nn> <s> <p> [nowait]: Perform a test on the indicated AMDI packlet. Display the MAP prompt and continue with other MAP tasks.
>TST- 14 r port0	TST <nn> <s> <device>: Perform a test on an AMDI port on an HIOP CP.
>TST 14 r u link0	TST <nn> <s> <p> <device>: Perform a test on an AMDI link supported by an AMDI packlet.
>TST 14 r link1	TST <nn> <s> <device>: Perform a test on an AMDI link supported by an HIOP CP.
>TST 4 r u link1 nowait	TST <nn> <s> <p> <device> [nowait]: Perform a test on an AMDI link supported by an AMDI packlet. Display the MAP prompt and continue with other MAP tasks

Uneq

You can apply this command to AMDI packlets, to the following AMDI devices: AMDI links supported by AMDI packlets and AMDI links supported by HIOP CPs.

If applied to an AMDI packlet, the command removes the packlet from the inventory.

If applied to an AMDI link, the command prevents the link from being used.

Menu selection number

12

Type

Operational

Limitations and restrictions

If applied to an AMDI packlet, the command will only execute on a ManB slot. If the slot is not ManB, the command will fail. Before applying the command to a packlet, remove the packlet from the slot, and remove any connections defined in table ATMCONN.

Before applying the command to a link, you must physically remove the transmission medium from the port.

Parameters

The uneq command requires command parameters. If you do not enter any parameters or you enter invalid parameters, the MAP terminal displays an error message. The MAP terminal prompts you to enter a correct parameter value.

nn

Use the <nn> (slot number) parameter value to indicate the number of the physical shelf slot - 1 to 18 for the front plane, 4 to 15 for the rear plane.

s

Use the <s> (side) parameter value to indicate the CP or packlet location in the physical shelf - front (f) or rear (r).

p

The <p> (position) parameter is required only if you are applying the command to an AMDI packlet, or to a link supported by an AMDI packlet. The value indicates the packlet location, upper (u) or lower (l).

device

Use the optional [device] parameter to indicate that the command applies to a device. You can use the Uneq_ command on the following AMDI devices: link0 or link1.

Options

There are no command options.

Command format examples

Example use of the uneq command is shown in Table "Uneq_ command example". The uneq command syntax is shown in the example below:

AMDI MAP level (end)

COMMAND <parameter>

Uneq_ command example

Command example	Command description
>UNEQ 4 r u	UNEQ <nn> <s> <p>: Unequip an AMDI packlet
>UNEQ 4 r u link0	UNEQ <nn> <s> <p> <device>: Unequip an AMDI link
>UNEQ 4 r link0	UNEQ <nn> <s> <p> <device>: Unequip an AMDI link on an HIOP CP

XACMtc

The XACMtc command is a non-menu command. It instructs the XA-Core system to display the XA-Core maintenance (XACMtc) MAP level.

Menu selection number

The AMDI MAP level does not display an XACMtc menu number.

Type

Navigational

Parameters

There are no command parameters.

Options

There are no command options.

Command format examples

Example use of the XACMtc command is shown in Table "XACMtc command example". The XACMtc command syntax is shown in the example below:

COMMAND

XACMtc command example

Command example	Command description
>XACMTC	Exit from the current MAP session and display the XACMtc MAP level.

CMIC MAP level

Introduction

Use the CMIC MAP level to perform maintenance actions on CMIC devices and on OC-3 two port interface (CMIC) packlets, if equipped. Select the CMIC option from any XA-Core MAP level to display the XA-Core CMIC MAP level.

CMIC MAP level

The CMIC MAP level is an interface that allows operating company personnel to monitor and perform system maintenance activities. The contents of the MAP display depends on whether the CMIC links are supported by OC-3 two port interface (CMIC) packlets or by HCMIC circuit packs. (You will always see one case or the other because the mixing of CMIC packlets and HCMIC circuit packs in an XA-Core shelf is not permitted.)

The following figure shows the CMIC MAP level as it appears when the CMIC links are supported by CMIC packlets. In each entry, the “Packlet” field displays the position of the packlet, and the “Status” field displays the status of the packlet. Each entry also displays the status of the following devices:

- Link0. This represents the single port and the single link. The interface does not separate the port and link on a CMIC packlet.
- TOD0.

CMIC MAP level, showing data for CMIC packlets in slots 4 rear and 15 rear

```
 XAC      MS      IOD     Net      PM      CCS     Lns     Trks     Ext     APPL
  .       .        .       .       .        .       .       .       .        .


CMIC            Front:   111111111  Rear: 111111   SM     PE      IO     PKLT
 0 Quit         123456789012345678  456789012345   .      .       .      .
 2          Sta: -.-.--..-..--.-..-  .--.-------.   0      0       0      0
 3          Dep:
 4          Typ:                     *         *
 5          Slot: Side: Packlet: Status: Port0 Port1 Link0: Link1: TOD0 TOD1
 6 Tst_      4    Rear  Lower    .                    .      .      .
 7 Bsy_     15    Rear  Lower    .                    .      .      .
 8 RTS_
 9
10
11
12 Uneq_
13 Route_
14 Alarm_
15
16 Trnsl_
17 Indicat_
18 Query_
 XMAP0
Time 14:12   >
```

CMIC MAP level (continued)

The following figure shows the CMIC MAP level as it appears when the CMIC links are supported by the CMIC sections of HCMIC circuit packs. In each entry, the “Packlet” and “Status” fields are blank because there are no packlets. Each entry displays the status of the following devices:

- Port0 and Port1
- Link0 and Link1
- TOD0 and TOD1

CMIC MAP level, showing data for the CMIC sections of HCMIC CPs in slot 4 rear and 15 rear

```
 XAC      MS      IOD      Net      PM      CCS      Lns     Trks     Ext     APPL
  .       .        .        .       .        .        .        .       .        .


CMIC                 Front:   111111111  Rear: 111111   SM     PE      IO     PKLT
 0 Quit              123456789012345678  456789012345   .      .       .      .
 2                Sta: -.-.--..-..--.-..-  .--.-------.   0      0       0      0
 3                Dep:
 4                Typ:                     *         *
 5                Slot: Side: Packlet: Status: Port0 Port1 Link0: Link1: TOD0 TOD1
 6 Tst_            4    Rear                    .     .     .      .      .    .
 7 Bsy_           15    Rear                    .     .     .      .      .    .
 8 RTS_
 9
10
11
12 Uneq_
13 Route_
14 Alarm_
15
16 Trnsl_
17 Indicat_
18 Query_
  XMAP0
 Time 14:12   >
```

CMIC menu commands

Menu commands appear on the MAP command menu. Non-menu commands do not appear on the MAP menu list. Enter both menu and non-menu commands in the command interpreter input area. You can enter either the command name or the menu number that matches the command.

Table "Summary of CMIC MAP level commands" contains a summary description of CMIC MAP level commands.

CMIC MAP level (continued)

Summary of CMIC MAP level commands (Sheet 1 of 2)

Command	Menu #	Type	Function
Alarm_	14	Op/Info	Enable, disable or query alarm notifications
AMDI	Non-menu	Nav	Display the AMDI MAP level
Bsy_	7	Op	Place an OC-3 two port interface packlet in ManB state or place a port on the CMIC section of an HCMIC circuit pack in ManB state
Cntrs_	15	Info	Display the non-zero system-busy (SysB) transition counters, or reset the SysB transition counters for a specified component
Disk	Non-menu	Nav	Display the Disk MAP level.
ETHR	Non-menu	Nav	Display the ETHR MAP level
Indicat_	17	Info	Cause a CP or packlet LED to wink or clear
IO	Non-menu	Nav	Display the IO MAP level
LoadFW_	10	Op	Use the LoadFW command to load firmware (FW) on a card without removing the card or packlet from the shelf.
PE	Non-menu	Nav	Display the PE MAP level
Query_	18	Info	List information for any CP or packlet
Quit	0	Nav	Exit from the MAP level now on display and display the XAC MAP level
Route_	13	Op	Display the primary and secondary routes to the message switch (MS)
RTIF	Non-menu	Nav	Display the RTIF MAP level
RTS_	8	Op	Test and return to service an OC-3 two port interface packlet or return to service a port on the CMIC section of an HCMIC circuit pack
SM	Non-menu	Nav	Display the SM MAP level

CMIC MAP level (continued)

Summary of CMIC MAP level commands (Sheet 2 of 2)

Command	Menu #	Type	Function
Tape	Non-menu	Nav	Display the Tape MAP level
Trnsl_	16	Op	Translate CMIC links to MS links
Tst_	6	Op	Perform a test on a port or link or TOD on the CMIC section of an HCMIC circuit pack, or on an OC-3 two port interface packlet, or on a link or TOD on such a packlet
Uneq_	12	Op	Unequip an OC-3 two port interface packlet, or unequip a link supported by the CMIC section of an HCMIC circuit pack
XACMtc	Non-menu	Nav	Display the XACMtc MAP level

Alarm_

The Alarm_ command is a common menu command. The Alarm_ command allows you to perform the following tasks:

- permit notification for selected alarms
- disable notification for selected alarms
- query the XA-Core system to identify alarm conditions or examine the status of alarms

Menu selection number

14

Type

Operational or Informational

Parameters

The Alarm_ command requires command parameters. If you do not enter any parameters or you enter invalid parameters, the MAP terminal prompts you to enter a correct parameter value. The Alarm_ command requires at least one of the following command parameters.

Alarm_name

Use the <alarm_name> parameter to indicate the name of the XA-Core system alarm. You can use the <alarm_name> parameter with the <disable> and <enable> parameters.

All

Use the <all> parameter to enable or disable notification for all alarms (use with the <enable> or <disable> parameter.

Disable

Use the <disable> parameter to prevent the XA-Core system from displaying alarm notification messages on the MAP screen. You can disable either one alarm at a time or all alarms. Use the <disable> parameter with the Alarm_ command and <alarm_name> parameter to disable a single alarm. Use the <disable> parameter with the <all> parameter to disable all XA-Core alarms. The <disable> parameter remains active until you enable the alarm or the system performs a restart.

Enable

Use the <enable> parameter to instruct the XA-Core system to display an alarm notification message on the MAP terminal. You can enable either one alarm or all alarms. Use the <enable> parameter together with the Alarm_ command and <alarm_name> parameter to enable a single alarm. Use the <enable> parameter with the <all> parameter to enable all XA-Core alarms.

Raised

Use the <raised> parameter to display all active alarms, the alarm severity and enabled/disabled status. You can use the <raised> parameter with the [enabled] or [disabled] options. If you do not enter any options, the XA-Core system MAP displays all active, enabled and disabled alarms.

Options

You can enter one of the following command options in the command statement.

Disabled

Use the [disabled] option with the <raised> parameter. The option instructs the XA-Core system to display all active alarms that have a disabled status.

Enabled

Use the [enabled] option with the <raised> parameter. The option instructs the XA-Core system to display all active alarms that have an enabled status.

Command format examples

Example use of the Alarm_ command is shown in Table "Alarm_ command examples". The Alarm_ command syntax is shown in the example below:

CMIC MAP level (continued)

COMMAND <parameter> [option]

Alarm_ command examples

Command example	Command description
>ALARM tape	ALARM <alarm_name>: Display the alarm severity and status for a single alarm.
>ALARM all	ALARM <all>: Display the alarm severity and status for all alarms.
>ALARM all disable	ALARM <all> <disable>: Disable notification for all alarms.
>ALARM tape disable	ALARM <alarm_name> <disable>: Disable notification for a single alarm.
>ALARM all enable	ALARM <all> <enable>: Enable notification for all alarms.
>ALARM tape enable	ALARM <alarm_name> <enable>: Enable notification for a single alarm.
>ALARM raised	ALARM <raised>: Display all active alarms
>ALARM raised enabled	ALARM <raised> [enabled]: Display active alarms that have an enabled status
>ALARM raised disabled	ALARM <raised> [disabled]: Display active alarms that have an disabled status

AMDI

The AMDI command is a non-menu command. The AMDI command instructs the XA-Core system to display the AMDI MAP level.

Menu selection number

The CMIC MAP level does not display an AMDI menu number.

Type

Navigational

Parameters

There are no command parameters.

Options

There are no command options.

Command format examples

Example use of the AMDI command is shown in Table "AMDI command example". The AMDI command syntax is shown in the example below:

COMMAND

AMDI command example

Command example	Command description
>AMDI	Exit from the current MAP session and display the AMDI MAP level.

Bsy_

The Bsy_ command can do the following things.

- If the CMIC links are supported by an OC-3 two port interface packlet, the command can place an InSv, SysB or CBsy OC-3 two port interface packlet in a ManB state. The XA-Core system does not allow the last, in-service (InSv) OC-3 two port interface packlet to be put in a ManB state.
- If the CMIC links are supported by the CMIC section of an HCMIC circuit pack, the command can place a CMIC port in the ManB state.

Menu selection number

7

Type

Operational

Parameters

The Bsy_ command requires command parameters. If you do not enter any parameters or you enter invalid parameters, the MAP terminal displays an error message. The MAP terminal prompts you to enter a correct parameter value. The Bsy_ command requires the following command parameters.

nn

Use the <nn> (slot number) parameter value to indicate the number of the physical shelf slot - 1 to 18.

CMIC MAP level (continued)

s

Use the <s> (side) parameter value to indicate the packlet location in the physical shelf - front (f) or rear (r).

p

If you want to busy an OC-3 two port interface packlet, use the <p> (position) parameter value to indicate the packlet location in an input/output processor (IOP) - upper (u) or lower (l).

device

If you want to busy a port on the CMIC section of an HCMIC circuit pack, use the optional <device> parameter value to identify the port - port0 or port1.

> ***Note:*** At this MAP level, the only devices that you can specify are the CMIC ports on the CMIC section of an HCMIC circuit pack. You can change the state of a CMIC link only at the MS MAP levels. (See Figure4-1, "MAP level hierarchy".) The TOD state changes only when there is a change in the state of the CMIC link that is carrying its TOD updates.

Options

You can enter one of the following command options in the command statement.

Force

The [force] option instructs the system to bypass redundancy checks and continue to execute the command.

When you use the [force] option in this MAP level, the system displays a message warning that the command will take the packlet out of service, and asking you to confirm the command.

If you confirm the command, the system may display another warning message and ask you to re-confirm the command. The system does this if some of the IO components in the system are unstable. The warning message identifies the unstable IO components, and tells you that executing the command might jeopardize the system further.

The XA-Core system ignores the [force] option if you attempt to place the last remaining OC-3 two port interface packlet in a ManB state.

Use the [force] option with caution. An outage is imminent if the last remaining OC-3 link cannot communicate with the message switch.

Noprompt

Use the [noprompt] option to bypass system prompts and continue to execute the command. Use the [noprompt] option with caution. System messages and prompts help you to prevent loss of information.

Command format examples

Example use of the Bsy_ command is shown in Table "Bsy_ command examples". The Bsy_ command syntax is shown in the example below:

COMMAND <parameter> [option]

Bsy_ command examples

Command use	Command description
>BSY 4 r l	BSY <nn> <s> <p>: Place the OC-3 packlet in a ManB state.
>BSY 15 r port0	BSY <nn> <s> <device>: Place the following device in a ManB state: port0 on the CMIC section of an HCMIC circuit pack.
>BSY 4 r l force	BSY <nn> <s> <p> [force]: Place the OC-3 packlet in a ManB state. Ignore reduced redundancy conditions.
>BSY 4 r l noprompt	BSY <nn> <s> [noprompt]: Place the OC-3 packlet in a ManB state. Block warning/prompt messages.
>BSY 4 r l force noprompt	BSY <nn> <s> [force] [noprompt]: Place the OC-3 packlet in a ManB state. Ignore possible error conditions. Block warning/prompt messages.

Cntrs_

The Cntrs_ command instructs the XA-Core system to either display the current values of all non-zero system-busy (SysB) transition counters, or to reset to zero the SysB transition counters for a specified component. A SysB transition counter counts the number of times that a component’s state changes from in-service to system-busy.

CMIC MAP level (continued)

The system maintains separate SysB transition counters for each instance of each of the following components:

- IOP, HIOP, and HCMIC circuit packs
- all packlets: disk, tape, CMIC, RTIF, Ethernet, and AMDI
- sections of HIOP circuit packs that are supporting ETHR and AMDI connections
- sections of HCMIC circuit packs that are supporting CMIC, RTIF, and ETHR connections
- time-of-day (TOD) devices
- ports

For each component, the system counts the SysB transitions that occur during the current six-hour interval. It also remembers the totals from the seven preceding six-hour intervals. It sums the totals from the seven preceding intervals and the current interval, to obtain the total number of SysB transitions occurring during a 42-to-48-hour period.

The monitored components are divided into groups and for each group there are minor and major threshold values. The minor and major thresholds are for a 42-to-48-hour period. If a component's total number of SysB transitions for the 42-to-48-hour period equals or exceeds the minor threshold for its component group, and if a SysBTh minor or major alarm is not already in effect, the system raises a SysBTh minor alarm (unless the alarm has been disabled). If a component's total number of SysB transitions for the 42-to-48-hour period equals or exceeds the major threshold for its component group, and if a SysBTh major alarm is not already in effect, the system raises a SysBTh major alarm (unless the alarm has been disabled). For information on the component groups, see the description of the "Query" parameter, below. For information on the SysBTh minor and major alarms and for information on disabling alarms, see the *XA-Core Maintenance Manual*, 297-8991-510.

Menu selection number

15

Type

Informational

Parameters

The Cntrs_ command requires either the <query> parameter or the <reset> parameter.

If you use the <query> parameter, no other parameters are permitted.

If you use the <reset> parameter, you must use additional parameters to specify a component: The <nn> and <s> parameters are required in all CNTRS RESET commands. The <p> parameter is required in some CNTRS RESET commands. The <device> parameter is required in some CNTRS RESET commands.

Query

The <query> parameter instructs the XA-Core system to display the following information.

- Either the value of all system-busy (SysB) transition counters that are greater than zero, or the message: `No SysB transitions on any components in the last 42-48 hrs.` A SysB transition counter counts the number of times that a component goes from the in-service state to the SysB state. For a list of the components for which the system maintains SysB transition counters, see the beginning of this "Cntrs_" section. The system maintains a separate SysB transition counter for each instance of each listed component, for example, for each TOD device. For each component, the system counts the SysB transitions that occur during the current six-hour interval. It also maintains a record of the totals from the seven preceding six-hour intervals. It sums the totals from the seven preceding intervals and the current interval, to obtain the total number of SysB transitions occurring during a 42-to-48-hour period.
- The values of the minor and major thresholds for each component group. (Component groups are described below.) The thresholds are shown in an output line that resembles the following:

  SysBTh thresholds: (Min/Maj): PE=2/6; SM=2/4; IOhw=2/6; IOlk=2/8

  > ***Note:*** The threshold values shown in the example are for illustrative purposes only. If the values shown in the example differ from the output of the CNTRS QUERY command, you should regard the command output as correct.

  For each component group, a slash separates the minor and major threshold values. For example, “SM=2/4” means that the minor threshold for the SM group is 2, and the major threshold is 4.

  The minor and major thresholds are for a 42-to-48-hour period. If a component’s total number of SysB transitions for the 42-to-48-hour period equals or exceeds the minor threshold for that group, and if a SysBTh minor or major alarm is not already in effect, the system raises a SysBTh minor alarm (unless the alarm has been disabled). If a component’s total number of SysB transitions for the 42-to-48-hour period equals or exceeds the major threshold for that group, and if a SysBTh major alarm is not

CMIC MAP level (continued)

already in effect, the system raises a SysBTh major alarm (unless the alarm has been disabled). For information on the SysBTh minor and major alarms and for information on disabling alarms, see the *XA-Core Maintenance Manual*, 297-8991-510.

The component groups are as follows.

— The PE group includes PE circuit packs.

— The SM group includes SM circuit packs.

— The IO link (IOlk) group includes IO links.

— The IO hardware (IOhw) group includes IOP, HIOP, and HCMIC circuit packs, all packlets, sections of HIOP circuit packs that are supporting ETHR and AMDI connections, sections of HCMIC circuit packs that are supporting RTIF, ETHR, and CMIC connections, time-of-day (TOD) devices, and ports.

Reset

The <reset> parameter instructs the system to reset to zero the value of the system-busy (SysB) transition counters for a specific component. The parameters following the <reset> parameter specify the component.

Use the <reset> parameter with the <nn> and <s> shelf location parameters for a circuit pack or with the <nn>, <s>, and <p> shelf location parameters for a packlet. With the <reset> parameter, use the <device> parameter to identify a port or a link or a time-of-day device (TOD).

Note 1: Ordinarily, you should use the <reset> parameter only for links. Use it after you have corrected a link fault, to reset the SysB transition counters for the link.

Note 2: Ordinarily, for all components other than links, you should let the system reset the counters automatically. The system resets a component's counters automatically when you replace the component. Alternatively, if the SysB transitions stop occurring, the counters will revert to zero after seven six-hour intervals. At the beginning of each six-hour interval, the system starts a six-hour transition counter at zero and it adjusts the 42-to-48-hour total to reflect the seven preceding six-hour intervals. If the component goes through seven consecutive six-hour intervals without a SysB transition, all the counters revert to zero.

nn

Use the <nn> (slot number) parameter value to indicate the number of the physical shelf slot where a CP or packlet is located - 1 to 18. The component could be the CP or packlet, or it could be a device on the CP or packlet. The <nn> parameter is required in all cases.

s

Use the <s> (side) parameter value to indicate the location in the physical shelf of a CP or packlet - front (f) or rear (r). The component could be the CP or packlet, or it could be a device on the CP or packlet. The <s> parameter is required in all cases.

p

Use the <p> (position) parameter value to indicate the packlet location in an input/output processor (IOP) - upper (u) or lower (l). The <p> parameter is required if the component is a packlet or a device on a packlet.

Device

Use the <device> parameter if the component is a link, a port, or a TOD device.

Options

There are no command options.

Command format examples

Example use of the Cntrs_ command is shown in Table "Cntrs_ command examples". The Cntrs_ command syntax is shown in the example below.

COMMAND <parameter>

Cntrs_ command examples (Sheet 1 of 2)

Command example	Command description
>Cntrs query	CNTRS QUERY: Display the values of all non-zero SysB transition counters, and display the minor and major threshold values.
>Cntrs reset 14 r	CNTRS RESET <nn> <s>: Reset the SysB transition counter for the circuit pack in slot 14R (an IOP or HIOP circuit pack).
>Cntrs reset 15 r u	CNTRS RESET <nn> <s> <p>: Reset the SysB transition counter for the packlet in slot 15R, upper (a CMIC packlet).
>Cntrs reset 6 r u link	CNTRS RESET <nn> <s> <p> <device>: Reset the SysB transition counter for the link on the ethernet packlet in slot 6R, upper.
>Cntrs reset 4 r l port0	CNTRS RESET <nn> <s> <p> <device>: Reset the SysB transition counter for port0 (the local port) on the RTIF packlet in slot 4R, lower.

CMIC MAP level (continued)

Cntrs_ command examples (Sheet 2 of 2)

Command example	Command description
>Cntrs reset 13 r l link0	CNTRS RESET <nn> <s> <p> <device>: Reset the SysB transition counter for link0 on the AMDI packlet in slot 13R, lower.
>Cntrs reset 14 r link1	CNTRS RESET <nn> <s> <device>: Reset the SysB transition counter for link1 on the AMDI section of the HIOP circuit pack in slot 14R.
>Cntrs reset 15 r tod0	CNTRS RESET <nn> <s> <device>: Reset the SysB transition counter for the tod0 time-of-day device on the CMIC section of the HCMIC circuit pack in slot 15R.

Disk

The Disk command is a non-menu command. The Disk command instructs the XA-Core system to display the Disk MAP level.

Menu selection number

The CMIC MAP level does not display a Disk menu number.

Type

Navigational

Parameters

There are no command parameters.

Options

There are no command options.

Command format examples

Example use of the Disk command is shown in Table "Disk command examples". The Disk command syntax is shown in the example below:

COMMAND

Disk command examples

Command example	Command description
>DISK	Exit from current MAP session and display the Disk MAP level

ETHR

The ETHR command is a non-menu command. The ETHR command instructs the XA-Core system to display the ETHR MAP level.

Menu selection number

The CMIC MAP level does not display an ETHR menu number.

Type

Navigational

Parameters

There are no command parameters.

Options

There are no command options.

Command format examples

Example use of the ETHR command is shown in Table "ETHR command example". The ETHR command syntax is shown in the example below:

COMMAND

ETHR command example

Command example	Command description
>ETHR	Exit from the current MAP session and display the ETHR MAP level.

Indicat_

The Indicat_ command is a common command. The command causes LEDs on CPs or packlets to wink or illuminate. The command allows you to locate a device on the physical shelf or to make sure all LEDs work. CPs and packlets must be in a ManB state before you use the Indicat_ card command.

Note: If you use the Indicat_ command with the <test> or <testall> parameters, CPs and packlets do not have to be in a ManB state.

Menu selection number

17

Type

Informational

CMIC MAP level (continued)

Parameters

The Indicat_ command requires parameters. If you do not enter any parameters or you enter invalid parameters, the MAP terminal displays an error message. The MAP terminal prompts you to enter a correct parameter value.

The Indicat_ command requires at least two of the shelf location parameters. In addition to the shelf location parameters, you can enter one of the following parameters.

Card

Use the <card> parameter to cause the red triangular LED of a SysB (system busy) or ManB CP or packlet to wink. You can use the [timer] option with the <card> parameter.

Clear

Use the <clear> parameter to return LEDs to a normal working state on a single winking or testing CP or packlet. Use the <clear> parameter with the shelf location parameters.

Clearall

Use the <clearall> parameter to return all winking or testing LEDs on all CPs or packlets to a normal working state.

Test

Use the <test> parameter to light the red LED on a single CP or packlet. The CP or packlet does not have to be in a ManB state. LEDs already winking on other CPs or packlets continue to wink. Use the <test> parameter with the shelf location parameters. You can use the <test> parameter with the [timer] option.

Testall

Use the <testall> parameter to light all LEDs on all CPs and packlets. The CPs and packlets do not have to be in a ManB state. LEDs already winking on other CPs or packlets continue to wink. You can use the <testall> parameter with the [timer] option. Do not use the shelf location parameters with the <testall> parameter.

nn

Use the <nn> (slot number) parameter value to indicate the number of the physical shelf slot - 1 to 18.

s

Use the <s> (side) parameter value to indicate the CP or packlet location in the physical shelf - front (f) or rear (r).

p

Use the <p> (position) parameter value to indicate the packlet location in an input/output processor (IOP) - upper (u) or lower (l).

Options

You can enter the following option in the command statement.

Timer

Use the [timer] option to indicate the time (in minutes) to light or wink LEDs. The XA-Core system turns the LEDs off when the time expires. The minimum time period is 1 min. The maximum time period is 999 min. If you do not define a time period, the default time period is 120 min.

Use the [timer] option as follows:

- use the [timer] option with the <card> parameter to wink a red LED on a single CP or packlet for a period of time.
- use the [timer] option with the <test> parameter to light the red LED on a CP or packlet for a period of time.
- use the [timer] option with the <testall> parameter to light the red LED on all CPs and packlets for a period of time.

Command format examples

Example use of the Indicat_ command is shown in Table "Indicat_ command examples". The Indicat_ command syntax is shown in the example below:

COMMAND <parameter> [option]

Indicat_ command examples (Sheet 1 of 2)

Command example	Command description
>INDICAT card 4 r u	INDICAT <card> <nn> <s> <p>: Wink red LED on a single ManB packlet.
>INDICAT card 4 r u 5	INDICAT <card> <nn> <s> <p> [timer]: Wink red LED on a single ManB packlet for 5 min.
>INDICAT clear 4 r u	INDICAT <clear> <nn> <s> <p>: Return LEDs on a single packlet to a normal working state.
>INDICAT clearall	INDICAT <clearall>: Return all LEDs on all CPs and packlets to a normal working state.

CMIC MAP level (continued)

Indicat_ command examples (Sheet 2 of 2)

Command example	Command description
>INDICAT test 4 r 5	INDICAT <test> <nn> <s> [timer]: Light all LEDs on a single CP for 5 min. If the command does not include the [timer] option, the XA-Core default time value is 120 min.
>INDICAT testall 5	INDICAT <testall> [timer]: Light all LEDs on all CPs and packlets for 5 min. The amber LEDs on the shelf interface modules (SIM) CPs do not light. The <test> parameter does not cause an audible alarm nor alarm notification on the MAP terminal. CPs or packlets now under test continue to wink
>INDICAT testall	INDICAT <testall>: Light all LEDs on all CPs and packlets for 120 min.

IO

The IO command is a non-menu command. The IO command instructs the XA-Core system to display the IO MAP level.

Menu selection number

The CMIC MAP level does not display an IO menu number.

Type

Navigational

Parameters

There are no command parameters.

Options

There are no command options.

Command format examples

Example use of the IO command is shown in Table "IO command example". The IO command syntax is shown in the example below:

COMMAND

IO command example

Command example	Command description
>IO	Exit from the current MAP session and display the IO MAP level.

LoadFW_

The LoadFW_ command triggers the firmware upgrade process for a packlet.

Type

The LoadFW_ command is a menu listed command.

Description

Use the LoadFW_ command to load firmware (FW) on a card without removing the card or packlet from the shelf.

When using the LoadFW_ command in the CMIC MAP level, you load the firmware by downloading the load from a file.

Release history

BAS14

LoadFW_ command is introduced in BAS14.

Parameters

The LoadFW_ command requires command parameters. If you do not enter any parameters or you enter invalid parameters, the MAP terminal displays an error message. The MAP terminal prompts you to enter a correct parameter value.

nn

Use the <nn> (slot number) parameter value to indicate the number of the physical shelf slot - 1 to 18 for the front plane, 4 to 15 for the rear plane.

s

Use the <s> (side) parameter value to indicate the packlet location in the physical shelf - front (f) or rear (r).

p

Use the <p> (packlet) parameter value to indicate the packlet location in the input/output processor circuit pack - upper (u) or lower (l).

CMIC MAP level (continued)

FILE new or FILE current

Use the FILE keyword to indicate that the firmware to be downloaded is to be found in a file. Use the <new> or <current> parameter to instruct the XA-Core system to reload the current firmware or load new firmware. (The data-schema table XAFWLOAD lists the current and new firmware loads for the packlet.)

Command format example

The LoadFW command syntax is shown below. Example use of the LoadFW_ command is shown in the following table.

COMMAND <parameters>

LoadFW_ command example

Command example	Command description
>LoadFW 15 r l FILE current	Upgrade the firmware in the packlet at 15R, lower. Use the current load (as identified in table XAFWLOAD) as the source.

Responses

The following table explains possible responses to the LoadFW_ command.

MAP responses with associated meanings and actions (Sheet 1 of 2)

Command:	**>loadfw 4 f file new**
MAP response:	`LoadFW 4f completed`
Meaning:	The system has loaded the firmware successfully.
Action:	Return the card to service (optional).
Command:	**>loadfw 4 f file new**
MAP response:	`LoadFW 4 f failed`
Meaning:	The LoadFW_ command has failed or been rejected.
Reason:	The MAP displays the reason for the failure. (For a list of possible reasons, see the description of log XAC333 in the chapter, “Understanding XA-Core log reports”.) Record the reason.
Action:	If major faults or the message NO VALID FW IN FLASH appears, load current firmware manually. For minor faults where the system recovers successfully, perform the actions listed on the MAP screen.
Command:	**>loadfw 4 rear file new**

MAP responses with associated meanings and actions (Sheet 2 of 2)

MAP response:	`Command Submitted.`
	`LoadFW 4 Rear failed`
	`Reason: Table entry not found.`

Meaning:	The LoadFW_ command has failed or been rejected.
Reason:	The reason indicates table XAFWLOAD does not contain the file volume or name.
Action:	Correct the entry in table XAFWLOAD.
Command:	**>loadfw 4 rear file new**

MAP response:	`Command Submitted.`
	`LoadFW 4 Rear Lower failed`
	`Reason: Unknown file type.`

Meaning:	The LoadFW_ command has failed or been rejected.
Reason:	The reason indicates table XAFWLOAD contains the correct file volume and name but the file is not a firmware load.
Action:	Copy a file that contains the correct firmware load.

PE

The PE command is a non-menu command. The PE command instructs the XA-Core system to display the XA-Core processor element (PE) MAP level.

Menu selection number

The CMIC MAP level does not display a PE menu number.

Type

Navigational

Parameters

There are no command parameters.

Options

There are no command options.

Command format examples

Example use of the PE command is shown in Table "PE command example". The PE command syntax is shown in the example below:

CMIC MAP level (continued)

COMMAND

PE command example

Command example	Command description
>PE	Exit from the current MAP session and display the PE MAP level.

Query_

The Query_ command is a common command. The Query_ command causes the MAP terminal to display the following information for a single packlet:

- the product engineering code (PEC)
- the hardware release
- the baseline hardware release (as specified in table PECINV)
- whether the hardware is compatible with the baseline and exception specifications (specifications found in table PECINV)
- the serial number
- the version of the current FW firmware load (the load that is in the circuit pack)
- the baseline FW firmware version (as specified in table FWINV)
- whether the current FW firmware load is compatible with the baseline and exception specifications (specifications found in table FWINV)
- the hardware/software vintage
- the full ROM version, that is, the full identification of the current FW firmware load (including the version code and any extensions)

The parameters determine the type of information displayed.

Menu selection number

18

Type

Informational

Parameters

The Query_ command requires command parameters. If you do not enter any parameters or you enter invalid parameters, the MAP terminal displays an error message. The MAP terminal prompts you to enter a correct parameter value.

If you use the Query_ command with the <card> parameter, enter the shelf location parameters. If you use the Query_ command with the <type> parameter or with the <shelf> parameter, do not enter the shelf location parameters.

Card

Use the <card> parameter to instruct the XA-Core system to perform a query on a CP or packlet. Display the description to the MAP terminal. You must use the <card> parameter with the CP or packlet shelf location parameters.

nn

Use the <nn> (slot number) parameter value to indicate the number of the physical shelf slot - 1 to 18.

s

Use the <s> (side) parameter value to indicate the CP or packlet location in the physical shelf - front (f) or rear (r).

p

Use the <p> (position) parameter value to indicate the packlet location in an input/output processor (IOP) - upper (u) or lower (l).

Shelf

Use the <shelf> parameter to instruct the XA-Core system to retrieve information about all the components installed in the shelf. The <shelf> parameter retrieves the information you would obtain by entering the Query card command for every circuit pack and packlet in the XA-Core.

Subsystem_name

Use the <subsystem_name> parameter to indicate the name of a subsystem. The value of the subsystem name is either SM, PE, or IO. Use the <subsystem_name> parameter only with the <type> parameter.

Type

Use the <type> parameter to indicate that the query applies to a subsystem of type SM, PE, or IO. Use the <type> parameter with the <subsystem name> parameter. The MAP terminal displays the location of all CPs that match the subsystem type. Do not enter shelf location parameters.

Options

There are no command options.

Command format examples

Example use of the Query_ command is shown in Table "Query_ command examples". The Query_ command syntax is shown in the example below:

CMIC MAP level (continued)

COMMAND <parameter>

Query_ command examples

Command example	Command description
>QUERY card 4 r	QUERY <card> <nn> <s>: Display the PEC, serial number, insertion/activation dates software load, firmware version and working state for the CP.
>QUERY card 7 r u	QUERY <card> <nn> <s> <p>: Display the PEC, serial number, insertion/ activation dates, software load, firmware version and working state for the packlet.
>QUERY shelf	QUERY <shelf>: Display the PEC, serial number, insertion/activation dates, software load, firmware version, and working state for every CP and packlet in the shelf.
>QUERY type io	QUERY <type> <subsystem_name>: Display subsystem name and location of all CPs and packlets that match the subsystem type.

Quit

The Quit command is a common command. The Quit command instructs the XA-Core system to exit from the current MAP session. You can exit to any MAP level that is higher in the MAP level hierarchy.

Note: The XA-Core system continues to execute any previous commands entered.

Menu selection number

0

Type

Navigational

Parameters

The Quit command parameters are optional.

All

Use the <all> parameter to terminate all XA-Core MAP sessions and display the CI prompt.

Incrname

Use the <incrname> parameter to end the current MAP session and display a MAP level higher in the MAP system hierarchy. Enter a MAP level name. The XA-Core system displays the MAP level that is one level higher in the MAP system hierarchy than the <incrname> (increment name) value.

Nlevel

Use the <nlevel> parameter to end the current MAP session and display a MAP level higher in the MAP system hierarchy. Enter a number value to represent the number of DMS MAP levels to step-back in the MAP system hierarchy.

Options

There are no command options.

Command format examples

Example use of the Quit command is shown in Table "Quit command examples". The Quit command syntax is shown in the example below:

COMMAND <parameter>

Quit command examples

Command example	Command description
>QUIT	Use the Quit command with no parameters to exit from the current MAP session. Display a MAP level that is one level above the current MAP session level.
>QUIT mtc	QUIT <incrname>: Exit the current MAP session. Display the MAP level that is one level above the indicated MAP level name.
>QUIT 2	QUIT <nlevel>: Exit the current MAP session. Display the MAP level that is two levels above the current MAP session in the MAP hierarchy.
>QUIT all	QUIT <all>: Exit from all MAP sessions and display the CI prompt.

CMIC MAP level (continued)

Route_

The Route_ command instructs the XA-Core system to display the actual primary and secondary message switch (MS) links. The OC-3 two port interface packlet must be in an InSv state.

Menu selection number

13

Type

Operational

Parameters

The Route_ command requires parameters. If you do not enter any parameters or you enter invalid parameters, the MAP terminal displays an error message. The MAP terminal prompts you to enter a correct parameter value.

nn

Use the <nn> (slot number) parameter value to indicate the number of the physical shelf slot - 1 to 18.

s

Use the <s> (side) parameter value to indicate the packlet location in the physical shelf - front (f) or rear (r).

p

Use the <p> (position) parameter value to indicate the packlet location in an input/output processor (IOP) - upper (u) or lower (l).

Options

There are no command options.

Command format examples

Example use of the Route_ command is shown in Table "Route_ command example". The Route_ command syntax is shown in the example below:

COMMAND <parameter>

Route_ command example

Command example	Command description
>Route 4 r l	ROUTE <nn> <s> <p>: Display the primary and secondary link routes.

RTIF

The RTIF command is a non-menu command. The RTIF command instructs the XA-Core system to display the remote terminal interface (RTIF) MAP level.

Menu selection number

The CMIC MAP level does not display an RTIF menu number.

Type

Navigational

Parameters

There are no command parameters.

Options

There are no command options.

Command format examples

Example use of the RTIF command is shown in Table "RTIF command example". The RTIF command syntax is shown in the example below:

COMMAND

RTIF command example

Command example	Command description
>RTIF	Exit from the current MAP session and display the RTIF MAP level.

RTS_

The RTS_ command can do the following things

- If the CMIC links are supported by an OC-3 two port interface packlet, the command can instruct the XA-Core system to test and return a ManB OC-3 two port interface packlet to service.
- If the CMIC links are supported by the CMIC section of an HCMIC circuit pack, the command can return a CMIC port to service.

Menu selection number

8

Type

Operational

CMIC MAP level (continued)

Parameters

The RTS_ command requires parameters. If you do not enter any parameters or you enter invalid parameters, the MAP terminal displays an error message. The MAP terminal prompts you to enter a correct parameter value.

The RTS_ command requires the following parameters.

nn

Use the <nn> (slot number) parameter value to indicate the number of the physical shelf slot - 1 to 18.

s

Use the <s> (side) parameter value to indicate the packlet location in the physical shelf - front (f) or rear (r).

p

If the CMIC links are supported by an OC-3 two port interface packlets, use the <p> (position) parameter value to indicate the packlet location in an input/output processor (IOP) - upper (u) or lower (l).

device

If the CMIC links are supported by the CMIC section of an HCMIC circuit pack, use the <device> parameter to indicate the CMIC port - port0 or port1.

> ***Note:*** At this MAP level, the only devices that you can specify are the CMIC ports on the CMIC section of an HCMIC circuit pack. You can change the state of a CMIC link only at the MS MAP levels. (See Figure4-1, "MAP level hierarchy".) The TOD state changes only when there is a change in the state of the CMIC link that is carrying its TOD updates.

Options

You can enter the following options in the command statement.

Nowait

Use the [nowait] option with the RTS_ command. Display the MAP prompt to allow you to enter other commands while the system returns the OC-3 packlet to service.

Command format examples

Example use of the RTS command is shown in Table "RTS command examples". The RTS command syntax is shown in the example below:

COMMAND <parameter> [option]

RTS command examples

Command example	Command description
>RTS 4 r l	RTS <nn> <s> <p>: Test and return the ManB Disk packlet to service.
>RTS 15 r port0	RTS <nn> <s> <device>: Return the following device to service: port0 on the CMIC section of an HCMIC circuit pack.
>RTS 4 r l nowait	RTS <nn> <s> <p> [nowait]: Test and return the ManB disk packlet to service. Display the MAP prompt and enter other commands.

SM

The SM command is a non-menu command. The SM command instructs the XA-Core system to display the shared memory (SM) MAP level.

Menu selection number

The CMIC MAP does not display an SM menu number.

Type

Navigational

Parameters

There are no command parameters.

Options

There are no command options.

Command format examples

Example use of the SM command is shown in Table "SM command example". The SM command syntax is shown in the example below:

COMMAND

SM command example

Command example	Command description
>SM	Exit from the current MAP session and display the SM MAP level.

CMIC MAP level (continued)

Tape

The Tape command is a non-menu command. The Tape command instructs the XA-Core system to display the XA-Core Tape MAP level.

Menu selection number

The CMIC MAP does not display a Tape menu number.

Type

Navigational

Parameters

There are no command parameters.

Options

There are no command options.

Command format examples

Example use of the Tape command is shown in Table "Tape command example". The Tape command syntax is shown in the example below:

COMMAND

Tape command example

Command example	Command description
>TAPE	Exit from the current MAP session and display the Tape MAP level.

Trnsl_

The Trnsl_ (translate) command instructs the XA-Core system to compare the planned link configuration with the actual link. The command finds the identity of the CMIC paddleboards in the message switch (MS) to which the link is connected. The CMIC MAP terminal displays the status of the links.

Menu selection number

16

Type

Informational

Parameters

The Trnsl_ command requires parameters. If you do not enter any parameters or you enter invalid parameters, the MAP terminal displays an error message. The MAP terminal prompts you to enter a correct parameter value.

The Trnsl_ command requires the following parameters.

nn

Use the <nn> (slot number) parameter value to indicate the number of the physical shelf slot - 1 to 18.

s

Use the <s> (side) parameter value to indicate the packlet location in the physical shelf - front (f) or rear (r).

p

If you are checking CMIC links that are supported by an OC-3 two port interface packlet, use the <p> (position) parameter value to indicate the packlet location in an input/output processor (IOP) - upper (u) or lower (l). If you are checking CMIC links that are supported by the CMIC section of an HCMIC circuit pack, do not use the <p> (position) parameter.

Options

There are no command options.

Command format examples

Example use of the Trnsl_ command is shown in Table "Trnsl_ command example". The Trnsl_ command syntax is shown in the example below:

COMMAND <parameter>

Trnsl_ command example

Command example	Command description
>TRNSL 4 r l	TRNSL <nn> <s> <p>: Display the link configuration and status of the links supported by the OC-3 two port interface (CMIC) packlet at slot 4, rear, lower.
>TRNSL 4 r	TRNSL <nn> <s>: Display the link configuration and status of the links supported by the CMIC section of the HCMIC circuit pack at slot 4, rear.

CMIC MAP level (continued)

Tst_

The Tst_ command can do the following things:

- If the CMIC links are supported by an OC-3 two port interface packlet, the command can
  - — instruct the XA-Core system to perform tests on the OC-3 two port interface packlet
  - — instruct the XA-Core system to perform tests on any one of the following devices on the packlet: link0, link1, or TOD0
- If the CMIC links are supported by the CMIC section of an HCMIC circuit pack, the command can instruct the XA-Core system to perform tests on any one of the following devices on that section of the circuit pack: port0, port1, link0, link1, TOD0, or TOD1.

The type of test performed depends on the working state (in-service or out-of-service) of the packlet or device.

An InSv test performs non-destructive tests. An OOS test performs both destructive and non-destructive tests.

Menu selection number

6

Type

Operational

Parameters

The Tst_ command requires parameters. If you do not enter any parameters or you enter invalid parameters, the MAP terminal displays an error message. The MAP terminal prompts you to enter a correct parameter value.

The Tst_ command requires the following command parameters.

nn

Use the <nn> (slot number) parameter value to indicate the number of the physical shelf slot - 1 to 18.

s

Use the <s> (side) parameter value to indicate the packlet location in the physical shelf - front (f) or rear (r).

p

If you want to test an OC-3 two port interface packlet or a device on a packlet, use the <p> (position) parameter value to indicate the packlet location in an input/output processor (IOP) - upper (u) or lower (l).

device

If you want to test a device, use the <device> parameter value to identify it, as follows:

- If the CMIC links are supported by an OC-3 two port interface packlet, you can name any one of the following devices on the packlet: link0, link1, or TOD0.
- If the CMIC links are supported by the CMIC section of an HCMIC circuit pack, you can name any one of the following CMIC devices on that section of the circuit pack: port0, port1, link0, link1, TOD0, or TOD1.

Loopback

Use the <loopback> parameter to test the links.

Options

You can enter the following command option in the command statement.

Nowait

Use the [nowait] option to display a MAP prompt and allow you to enter other commands while the system performs the tests.

Command format examples

Example use of the Tst_ command is shown in Table "Tst_ command examples". The Tst_ command syntax is shown in the example below:

COMMAND <parameter> [option]

Tst_ command examples (Sheet 1 of 2)

Command example	Command description
>TST 4 r l	TST <nn> <s> <p>: Perform a test on the packlet. The packlet can be InSv or OOS for this test.
>TST 4 r l nowait	TST <nn> <s> <p> [nowait]: Perform a test on the packlet. Display the MAP prompt and enter other MAP commands. The packlet can be InSv or OOS for this test.

CMIC MAP level (continued)

Tst_ command examples (Sheet 2 of 2)

Command example	Command description
>TST 4 r l link0 loopback	TST <nn> <s> <p> <device> <loopback>: Perform a loopback test on the packlet device. The packlet must be InSv for this test.
>TST 4 r l link1 loopback	TST <nn> <s> <p> <device> <loopback>: Perform a loopback test on the packlet device. The packlet must be InSv for this test.
>TST 4 r l link1 loopback nowait	TST <nn> <s> <p> <device> <loopback> [nowait]: Perform a loopback test on the packlet device. The packlet must be InSv for this test.
>TST 4 r l tod0	TST <nn> <s> <p> <device>: Perform a test on the packlet device. The packlet must be InSv for this test.
>TST 15 r tod1	TST <nn> <s> <device>: Perform a test on the time-of-day device on the CMIC section of the HCMIC circuit pack. The circuit pack must be InSv for this test.

Uneq_

Use the uneq_ command to remove an OC-3 two port interface (CMIC) packlet from the inventory, or to unequip a CMIC link supported by the CMIC section of an HCMIC circuit pack.

Menu selection number

12

Type

Operational

Limitations and restrictions

If applied to an OC-3 two port interface (CMIC) packlet, the command will only execute on a ManB slot. If the slot is not ManB, the command will fail. Before applying the command to a packlet, remove the packlet from the slot.

Parameters

The uneq_ command requires command parameters. If you do not enter any parameters or you enter invalid parameters, the MAP terminal displays an error message. The MAP terminal prompts you to enter a correct parameter value.

nn

Use the <nn> (slot number) parameter value to indicate the number of the physical shelf slot - 1 to 18 for the front plane, 4 to 15 for the rear plane.

s

Use the <s> (side) parameter value to indicate the CP or packlet location in the physical shelf - front (f) or rear (r).

p

If you are removing an OC-3 two port interface (CMIC) packlet from the inventory, use the <p> (position) parameter to indicate the packlet location, upper (u) or lower (l).

device

If you are unequipping a CMIC link supported by the CMIC section of an HCMIC circuit pack, use the <device> parameter to indicate the link: link0 or link1.

> ***Note:*** You can unequip a CMIC link supported by an HCMIC circuit pack, but you cannot unequip a CMIC link supported by an OC-3 two port interface (CMIC) packlet.

Options

There are no command options.

Command format examples

Example use of the uneq_ command is shown in Table "Uneq_ command example". The uneq_ command syntax is shown in the example below:

COMMAND <parameter>

Uneq_ command example (Sheet 1 of 2)

Command example	Command description
>UNEQ 4 r l	UNEQ <nn> <s> <p>: Unequip the OC-3 two port interface (CMIC) packlet at slot 4, rear, lower.

CMIC MAP level (end)

Uneq_ command example (Sheet 2 of 2)

Command example	Command description
>UNEQ 15 r link0	UNEQ <nn> <s> <device>: Unequip a CMIC link supported by the HCMIC circuit pack in slot 15, rear.

XACMtc

The XACMtc command is a non-menu command. The XACMtc command instructs the XA-Core system to display the XA-Core maintenance (XACMtc) MAP level.

Menu selection number

The CMIC MAP does not display an XACMtc menu number.

Type

Navigational

Parameters

There are no command parameters.

Options

There are no command options.

Command format examples

Example use of the XACMtc command is shown in Table "XACMtc command example". The XACMtc command syntax is shown in the example below:

COMMAND

XACMtc command example

Command example	Command description
>XACMTC	Exit from the current MAP session and display the XACMtc MAP level.

ETHR MAP level

Introduction

Use the XA-Core Ethernet (ETHR) MAP to perform maintenance actions on the XA-Core ethernet packlets, and on all ethernet ports and links on both ethernet packlets and HIOP circuit packs. Select the ETHR option from any XA-Core MAP level to display the XA-Core Ethernet MAP level.

ETHR MAP level

The Ethernet MAP level is an interface that allows operating company personnel to monitor and perform system maintenance activities. The command interpreter output area displays the location of ethernet components and the working state of ethernet packlets, ports, and links.

All ethernet links must be supported by ethernet packlets, or all such links must be supported by HIOP circuit packs. The following MAP illustrations show both cases. If the ethernet links are handled by HIOP circuit packs, the packlet-location and packlet-state fields are blank.

ETHR MAP level, assuming that ethernet links are handled by ethernet packlets

```
 XAC        MS       IOD      Net       PM      CCS      Lns     Trks     Ext      APPL
 .          .        .        .         .       .        .       .        .        .

ETHR            Front:   111111111  Rear: 111111     SM     PE     IO     PKLT
 0 Quit         123456789012345678  456789012345     .      .      .      .
 2            Sta:-.-.--..-..-.--.-.  ....-..-....   0      0      0      0
 3            Dep:
 4            Typ:                     **      **
 5            Slot: Side: Packlet:  Port: Link:
 6 Tst_         5   Rear  Lower .   .     .
 7 Bsy_         6   Rear  Lower .   .     .
 8 RTS_        13   Rear  Lower .   .     .
 9             14   Rear  Lower .   .     .
10 LoadFW_    XAC:
11            ETHR:
12 Uneq_
13
14 Alarm_
15 Cntrs_
16
17 Indicat_
18 Query_
 XMAP0
Time  14:12   >
```

ETHR MAP level (continued)

ETHR MAP level, assuming that ethernet links are handled by HIOP circuit packs

```
 XAC        MS       IOD      Net       PM      CCS      Lns     Trks     Ext      APPL
 .          .        .        .         .       .        .       .        .        .

ETHR            Front:   111111111  Rear: 111111     SM     PE     IO     PKLT
 0 Quit         123456789012345678  456789012345     .      .      .      .
 2            Sta:-.-.--..-..-.--.-.  ....-..-....   0      0      0      0
 3            Dep:
 4            Typ:                     *        *
 5            Slot: Side: Packlet:  Port: Link:
 6 Tst_         5   Rear            .     .
 7 Bsy_        14   Rear            .     .
 8 RTS_       XAC:
 9            ETHR:
10 LoadFW_
11
12 Uneq_
13
14 Alarm_
15 Cntrs_
16
17 Indicat_
18 Query_
 XMAP0
Time  14:12   >
```

ETHR menu commands

Menu commands appear on the MAP command menu. Non-menu commands do not appear on the MAP menu list. Enter both menu and non-menu commands in the command interpreter input area.

Table "Summary of ETHR MAP commands" contains a summary description of ETHR MAP level commands.

Summary of ETHR MAP commands (Sheet 1 of 2)

Command	Menu #	Type	Function
Abtk	Hidden	Op	Abort last ETHR MAP level request
Alarm_	14	Op/Info	Enable, disable or query alarm notifications
AMDI	Non-menu	Nav	Display the AMDI MAP level
Bsy_	7	Op	Place the ethernet packlet, port or link in ManB state
CMIC	Non-menu	Nav	Display the CMIC MAP level

ETHR MAP level (continued)

Summary of ETHR MAP commands (Sheet 2 of 2)

Command	Menu #	Type	Function
Cntrs_	15	Info	Display the non-zero system-busy (SysB) transition counters, or reset the SysB transition counters for a specified component
Disk	Non-menu	Nav	Display the Disk MAP level
Indicat_	17	Info	Cause a CP or packlet LED to wink or clear
IO	Non-menu	Nav	Display the IO MAP level
LoadFW_	10	Op	Triggers the firmware upgrade process
PE	Non-menu	Nav	Display the PE MAP level
Query_	18	Info	List information for any CP or packlet
Quit	0	Nav	Exit from the MAP level now on display and display the XAC MAP level
RTIF	Non-menu	Nav	Display the RTIF MAP level
RTS_	8	Op	Test and return an ethernet packlet, port or link to service
SM	Non-menu	Nav	Display the SM MAP level
Tape	Non-menu	Nav	Display the Tape MAP level
Tst_	6	Op	Perform a test on an ethernet packlet, port or link
Uneq_	12	Op	Unequip an ethernet packlet or an ethernet link
XACMtc	Non-menu	Nav	Display the XACMtc MAP level

Abtk

The Abtk command is a non-menu command that allows the user to abort the last request made from the ETHR level.

Menu selection number

The ETHR MAP level does not display a Abtk menu number.

ETHR MAP level (continued)

Type

Operational

Parameters

The Abtk command requires command parameters. If you do not enter any parameters or you enter invalid parameters, the MAP terminal prompts you to enter a correct parameter value.

The Abtk command must use the same device that the command being aborted was issued to.

Options

There are no command options.

Command format examples

Example use of the Abtk command is shown in Table "Abtk command examples". The Abtk command syntax is shown in the example below:

COMMAND

Abtk command examples

Command example	Command description
>Abtk 14 r l	Abort the last request made from the ETHR level

Alarm_

The Alarm_ command is a common menu command that allows you to perform the following tasks:

- permit notification for selected alarms
- disable notification for selected alarms
- query the XA-Core system to identify alarm conditions or examine the status of alarms

Menu selection number

14

Type

Operational or Informational

Parameters

The Alarm_ command requires command parameters. If you do not enter any parameters or you enter invalid parameters, the MAP terminal prompts you to enter a correct parameter value. The Alarm_ command requires at least one of the following command parameters.

Alarm_name

Use the <alarm_name> parameter to indicate the name of the XA-Core system alarm. You can use the <alarm_name> parameter with the <disable> and <enable> parameters.

All

Use the <all> parameter to enable or disable notification for all alarms (use with the <enable> or <disable> parameter).

Disable

Use the <disable> parameter to prevent the XA-Core system from displaying alarm notification messages on the MAP screen. You can disable either one alarm at a time or all alarms. Use the <disable> parameter with the Alarm_ command and <alarm_name> parameter to disable a single alarm. Use the <disable> parameter with the <all> parameter to disable all XA-Core alarms. The <disable> parameter remains active until you enable the alarm or the system performs a restart.

Enable

Use the <enable> parameter to instruct the XA-Core system to display an alarm notification message on the MAP terminal. You can enable either one alarm or all alarms. Use the <enable> parameter together with the Alarm_ command and <alarm_name> parameter to enable a single alarm. Use the <enable> parameter with the <all> parameter to enable all XA-Core alarms.

Raised

Use the <raised> parameter to display all active alarms, the alarm severity and enabled/disabled status. You can use the <raised> parameter with the [enabled] or [disabled] options. If you do not enter any options, the XA-Core system MAP displays all active, enabled and disabled alarms.

Options

You can enter one of the following command options in the command statement.

Disabled

Use the [disabled] option with the <raised> parameter. The option instructs the XA-Core system to display all active alarms that have a disabled status.

ETHR MAP level (continued)

Enabled

Use the [enabled] option with the <raised> parameter. The option instructs the XA-Core system to display all active alarms that have an enabled status.

Command format examples

Example use of the Alarm_ command is shown in Table "Alarm_ command examples". The Alarm_ command syntax is shown in the example below:

COMMAND <parameter> [option]

Alarm_ command examples

Command example	Command description
>ALARM tape	ALARM <alarm_name>: Display the alarm severity and status for a single alarm.
>ALARM all	ALARM <all>: Display the alarm severity and status for all alarms.
>ALARM all disable	ALARM <all> <disable>: Disable notification for all alarms.
>ALARM tape disable	ALARM <alarm_name> <disable>: Disable notification for a single alarm.
>ALARM all enable	ALARM <all> <enable>: Enable notification for all alarms.
>ALARM tape enable	ALARM <alarm_name> <enable>: Enable notification for a single alarm.
>ALARM raised	ALARM <raised>: Display all active alarms
>ALARM raised enabled	ALARM <raised> [enabled]: Display active alarms that have an enabled status
>ALARM raised disabled	ALARM <raised> [disabled]: Display active alarms that have an disabled status

AMDI

The AMDI command is a non-menu command. The AMDI command instructs the XA-Core system to display the AMDI MAP level.

Menu selection number

The ETHR MAP level does not display an AMDI menu number.

Type

Navigational

Parameters

There are no command parameters.

Options

There are no command options.

Command format examples

Example use of the AMDI command is shown in Table "AMDI command examples". The AMDI command syntax is shown in the example below:

COMMAND

AMDI command examples

Command example	Command description
>AMDI	Exit from the current MAP session and display the AMDI MAP level.

Bsy_

The Bsy_ command places an InSv, IsTb, SysB or CBsy ethernet packlet or device (a port or a link) in a ManB state. If placing a packlet, port, or link in a ManB state results in a major alarm, the force option must be used. If the ManB state results in a critical alarm, the XA-Core system rejects the Bsy_ command even with the force option.

If the Bsy_ command applies to an ethernet packlet, it will affect the state of the port and link. If the command applies to a port, it will affect the state of the link.

You can apply this command to ethernet packlets, to ethernet ports and links on ethernet packlets, and to ethernet ports and links on HIOP CPs.

ETHR MAP level (continued)

Menu selection number

7

Type

Operational

Parameters

The Bsy_ command requires command parameters. If you do not enter any parameters or you enter invalid parameters, the MAP terminal displays an error message. The MAP terminal prompts you to enter a correct parameter value. The command parameters are as follows.

nn

The <nn> (slot number) parameter is always required. The value indicates the number of the physical shelf slot - 1 to 18 for the front plane, 4 to 15 for the rear plane.

s

The <s> (side) parameter is always required. The value indicates the location in the physical shelf - front (f) or rear (r).

p

The <p> (position) parameter is required only if you are applying the command to an ethernet packlet or to a device (a port or a link) on an ethernet packlet. The value indicates the packlet location, upper (u) or lower (l).

device

Use the optional [device] parameter to indicate that the command applies to a device. You can use the Bsy_ command on the following ethernet devices: port or link.

Options

You can enter the following command options in the command statement.

Force

The [force] option instructs the system to bypass redundancy checks and continue to execute the command.

When you use the [force] option in this MAP level, the system displays a message warning that the command will take the packlet or device out of service, and asking you to confirm the command.

If you confirm the command, the system may display another warning message and ask you to re-confirm the command. The system does this if some

of the IO components in the system are unstable. The warning message identifies the unstable IO components, and tells you that executing the command might jeopardize the system further.

Use the [force] option with caution.

Noprompt

Use the [noprompt] option to bypass system prompts and continue to execute the command. Use the [noprompt] option with caution. System messages and prompts help the user prevent loss of information.

Format examples

Example use of the Bsy_ command is shown in Table "Bsy_ command examples". The Bsy_ command syntax is shown in the example below:

COMMAND <parameter> [option]

Bsy_ command examples (Sheet 1 of 2)

Command use	Command description
>BSY 14 r u	BSY <nn> <s> <p>: Place an ethernet packlet in a ManB state.
>BSY 14 r u port	BSY <nn> <s> <p> <device>: Place an ethernet port on an ethernet packlet in a ManB state.
>BSY 14 r port	BSY <nn> <s> <device>: Place an ethernet port on an HIOP CP in a ManB state.
>BSY 14 r u link	BSY <nn> <s> <p> <device>: Place an ethernet link supported by an ethernet packlet in a ManB state.
>BSY 14 r link	BSY <nn> <s> <device>: Place an ethernet link supported by an HIOP CP in a ManB state.
>BSY 14 r u force	BSY <nn> <s> <p> [force]: Place an ethernet packlet in a ManB state. Ignore reduced redundancy conditions.
>BSY 14 r u noprompt	BSY <nn> <s> <p> [noprompt]: Place an ethernet packlet in a ManB state. Block warning/prompt messages.

ETHR MAP level (continued)

Bsy_ command examples (Sheet 2 of 2)

Command use	Command description
>BSY 14 r u force noprompt	BSY <nn> <s> <p> [force] [noprompt]: Place an ethernet packlet in a ManB state. Ignore possible error conditions. Block warning/prompt messages.

CMIC

The CMIC command is a non-menu command. The CMIC command instructs the XA-Core system to display the CMIC MAP level.

Menu selection number

The ETHR MAP level does not display a CMIC menu number.

Type

Navigational

Parameters

There are no command parameters.

Options

There are no command options.

Command format examples

Example use of the CMIC command is shown in Table "CMIC command examples". The CMIC command syntax is shown in the example below:

COMMAND

CMIC command examples

Command example	Command description
>CMIC	Exit from the current MAP session and display the CMIC MAP level.

Cntrs_

The Cntrs_ command instructs the XA-Core system to either display the current values of all non-zero system-busy (SysB) transition counters, or to reset to zero the SysB transition counters for a specified component. A SysB transition counter counts the number of times that a component’s state changes from in-service to system-busy.

The system maintains separate SysB transition counters for each instance of each of the following components:

- IOP, HIOP, and HCMIC circuit packs
- all packlets: disk, tape, CMIC, RTIF, Ethernet, and AMDI
- sections of HIOP circuit packs that are supporting ETHR and AMDI connections
- sections of HCMIC circuit packs that are supporting CMIC, RTIF, and ETHR connections
- time-of-day (TOD) devices
- ports

For each component, the system counts the SysB transitions that occur during the current six-hour interval. It also remembers the totals from the seven preceding six-hour intervals. It sums the totals from the seven preceding intervals and the current interval, to obtain the total number of SysB transitions occurring during a 42-to-48-hour period.

The monitored components are divided into groups and for each group there are minor and major threshold values. The minor and major thresholds are for a 42-to-48-hour period. If a component's total number of SysB transitions for the 42-to-48-hour period equals or exceeds the minor threshold for its component group, and if a SysBTh minor or major alarm is not already in effect, the system raises a SysBTh minor alarm (unless the alarm has been disabled). If a component's total number of SysB transitions for the 42-to-48-hour period equals or exceeds the major threshold for its component group, and if a SysBTh major alarm is not already in effect, the system raises a SysBTh major alarm (unless the alarm has been disabled). For information on the component groups, see the description of the "Query" parameter, below. For information on the SysBTh minor and major alarms and for information on disabling alarms, see the *XA-Core Maintenance Manual*, 297-8991-510.

Menu selection number

15

Type

Informational

Parameters

The Cntrs_ command requires either the <query> parameter or the <reset> parameter.

If you use the <query> parameter, no other parameters are permitted.

ETHR MAP level (continued)

If you use the <reset> parameter, you must use additional parameters to specify a component: The <nn> and <s> parameters are required in all CNTRS RESET commands. The <p> parameter is required in some CNTRS RESET commands. The <device> parameter is required in some CNTRS RESET commands.

Query

The <query> parameter instructs the XA-Core system to display the following information.

- Either the value of all system-busy (SysB) transition counters that are greater than zero, or the message: `No SysB transitions on any components in the last 42-48 hrs.` A SysB transition counter counts the number of times that a component goes from the in-service state to the SysB state. For a list of the components for which the system maintains SysB transition counters, see the beginning of this "Cntrs_" section. The system maintains a separate SysB transition counter for each instance of each listed component, for example, for each TOD device. For each component, the system counts the SysB transitions that occur during the current six-hour interval. It also maintains a record of the totals from the seven preceding six-hour intervals. It sums the totals from the seven preceding intervals and the current interval, to obtain the total number of SysB transitions occurring during a 42-to-48-hour period.
- The values of the minor and major thresholds for each component group. (Component groups are described below.) The thresholds are shown in an output line that resembles the following:

  SysBTh thresholds: (Min/Maj): PE=2/6; SM=2/4; IOhw=2/6; IOlk=2/8

  > ***Note:*** The threshold values shown in the example are for illustrative purposes only. If the values shown in the example differ from the output of the CNTRS QUERY command, you should regard the command output as correct.

  For each component group, a slash separates the minor and major threshold values. For example, “SM=2/4” means that the minor threshold for the SM group is 2, and the major threshold is 4.

  The minor and major thresholds are for a 42-to-48-hour period. If a component’s total number of SysB transitions for the 42-to-48-hour period equals or exceeds the minor threshold for that group, and if a SysBTh minor or major alarm is not already in effect, the system raises a SysBTh minor alarm (unless the alarm has been disabled). If a component’s total number of SysB transitions for the 42-to-48-hour period equals or exceeds the major threshold for that group, and if a SysBTh major alarm is not

already in effect, the system raises a SysBTh major alarm (unless the alarm has been disabled). For information on the SysBTh minor and major alarms and for information on disabling alarms, see the *XA-Core Maintenance Manual*, 297-8991-510.

The component groups are as follows.

— The PE group includes PE circuit packs.

— The SM group includes SM circuit packs.

— The IO link (IOlk) group includes IO links.

— The IO hardware (IOhw) group includes IOP, HIOP, and HCMIC circuit packs, all packlets, sections of HIOP circuit packs that are supporting ETHR and AMDI connections, sections of HCMIC circuit packs that are supporting RTIF, ETHR, and CMIC connections, time-of-day (TOD) devices, and ports.

Reset

The <reset> parameter instructs the system to reset to zero the value of the system-busy (SysB) transition counters for a specific component. The parameters following the <reset> parameter specify the component.

Use the <reset> parameter with the <nn> and <s> shelf location parameters for a circuit pack or with the <nn>, <s>, and <p> shelf location parameters for a packlet. With the <reset> parameter, use the <device> parameter to identify a port or a link or a time-of-day device (TOD).

Note 1: Ordinarily, you should use the <reset> parameter only for links. Use it after you have corrected a link fault, to reset the SysB transition counters for the link.

Note 2: Ordinarily, for all components other than links, you should let the system reset the counters automatically. The system resets a component's counters automatically when you replace the component. Alternatively, if the SysB transitions stop occurring, the counters will revert to zero after seven six-hour intervals. At the beginning of each six-hour interval, the system starts a six-hour transition counter at zero and it adjusts the 42-to-48-hour total to reflect the seven preceding six-hour intervals. If the component goes through seven consecutive six-hour intervals without a SysB transition, all the counters revert to zero.

nn

Use the <nn> (slot number) parameter value to indicate the number of the physical shelf slot where a CP or packlet is located - 1 to 18. The component could be the CP or packlet, or it could be a device on the CP or packlet. The <nn> parameter is required in all cases.

ETHR MAP level (continued)

s

Use the <s> (side) parameter value to indicate the location in the physical shelf of a CP or packlet - front (f) or rear (r). The component could be the CP or packlet, or it could be a device on the CP or packlet. The <s> parameter is required in all cases.

p

Use the <p> (position) parameter value to indicate the packlet location in an input/output processor (IOP) - upper (u) or lower (l). The <p> parameter is required if the component is a packlet or a device on a packlet.

Device

Use the <device> parameter if the component is a link, a port, or a TOD device.

Options

There are no command options.

Command format examples

Example use of the Cntrs_ command is shown in Table "Cntrs_ command examples". The Cntrs_ command syntax is shown in the example below.

COMMAND <parameter>

Cntrs_ command examples (Sheet 1 of 2)

Command example	Command description
>Cntrs query	CNTRS QUERY: Display the values of all non-zero SysB transition counters, and display the minor and major threshold values.
>Cntrs reset 14 r	CNTRS RESET <nn> <s>: Reset the SysB transition counter for the circuit pack in slot 14R (an IOP or HIOP circuit pack).
>Cntrs reset 15 r u	CNTRS RESET <nn> <s> <p>: Reset the SysB transition counter for the packlet in slot 15R, upper (a CMIC packlet).
>Cntrs reset 6 r u link	CNTRS RESET <nn> <s> <p> <device>: Reset the SysB transition counter for the link on the ethernet packlet in slot 6R, upper.
>Cntrs reset 4 r l port0	CNTRS RESET <nn> <s> <p> <device>: Reset the SysB transition counter for port0 (the local port) on the RTIF packlet in slot 4R, lower.

Cntrs_ command examples (Sheet 2 of 2)

Command example	Command description
>Cntrs reset 13 r l link0	CNTRS RESET <nn> <s> <p> <device>: Reset the SysB transition counter for link0 on the AMDI packlet in slot 13R, lower.
>Cntrs reset 14 r link1	CNTRS RESET <nn> <s> <device>: Reset the SysB transition counter for link1 on the AMDI section of the HIOP circuit pack in slot 14R.
>Cntrs reset 15 r tod0	CNTRS RESET <nn> <s> <device>: Reset the SysB transition counter for the tod0 time-of-day device on the CMIC section of the HCMIC circuit pack in slot 15R.

Disk

The Disk command is a non-menu command. The Disk command instructs the XA-Core system to display the Disk MAP level.

Menu selection number

The ETHR MAP level does not display a Disk menu number.

Type

Navigational

Parameters

There are no command parameters.

Options

There are no command options.

Command format examples

Example use of the Disk command is shown in Table "Disk_ command examples". The Disk command syntax is shown in the example below:

COMMAND

Disk_ command examples

Command example	Command description
>DISK	Exit from current MAP session and display the Disk MAP level

ETHR MAP level (continued)

Indicat_

The Indicat_ command is a common command. The command causes LEDs on CPs or packlets to wink or illuminate. The command allows you to locate a device on the physical shelf or to make sure all LEDs work. CPs and packlets must be in a ManB state before you use the Indicat_ card command.

Note 1: If you use the Indicat_ command with the <test> or <testall> parameters, CPs and packlets do not have to be in a ManB state.

Note 2: This command applies to the ethernet packlet only. For the HIOP CP, use the Indicat_ command at the IO MAP level.

Menu selection number

17

Type

Informational

Parameters

The Indicat_ command requires parameters. If you do not enter any parameters or you enter invalid parameters, the MAP terminal displays an error message. The MAP terminal prompts you to enter a correct parameter value.

The Indicat_ command requires at least two of the shelf location parameters. In addition to the shelf location parameters, you can enter one of the following parameters.

Card

Use the <card> parameter to cause the red triangular LED of a SysB (system busy) or ManB CP or packlet to wink. You can use the [timer] option with the <card> parameter.

Clear

Use the <clear> parameter to return LEDs to a normal working state on a single winking or testing CP or packlet. Use the <clear> parameter with the shelf location parameters.

Clearall

Use the <clearall> parameter to return all winking or testing LEDs on all CPs or packlets to a normal working state.

Test

Use the <test> parameter to light the all LEDs on a single CP or packlet. The CP or packlet does not have to be in a ManB state. LEDs already winking on

other CPs or packlets continue to wink. Use the <test> parameter with the shelf location parameters. You can use the <test> parameter with the [timer] option.

Testall

Use the <testall> parameter to light all LEDs on all CPs and packlets. The CPs and packlets do not have to be in a ManB state. LEDs already winking on other CPs or packlets continue to wink. You can use the <testall> parameter with the [timer] option. Do not use the shelf location parameters with the <testall> parameter.

nn

Use the <nn> (slot number) parameter value to indicate the number of the physical shelf slot - 1 to 18 for the front plane, 4 to 15 for the rear plane.

s

Use the <s> (side) parameter value to indicate the CP or packlet location in the physical shelf - front (f) or rear (r).

p

Use the <p> (position) parameter value to indicate the packlet location in an input/output processor (IOP) - upper (u) or lower (l).

Options

You can enter the following option in the command statement.

Timer

Use the [timer] option to indicate the time (in minutes) to light or wink LEDs. The XA-Core system turns the LEDs off when the time expires. The minimum time period is 1 min. The maximum time period is 999 min. If you do not define a time period, the default time period is 120 min.

Use the [timer] option as follows:

- use the [timer] option with the <card> parameter to wink a red LED on a single CP or packlet for a period of time.
- use the [timer] option with the <test> parameter to light the red LED on a CP or packlet for a period of time.
- use the [timer] option with the <testall> parameter to light the red LED on all CPs and packlets for a period of time.

Command format examples

Example use of the Indicat_ command is shown in Table "Indicat_ command examples". The Indicat_ command syntax is shown in the example below:

ETHR MAP level (continued)

COMMAND <parameter> [option]

Indicat_ command examples

Command example	Command description
>INDICAT card 14 r u	INDICAT <card> <nn> <s> <p>: Wink red LED on a single ManB packlet.
>INDICAT card 14 r u 5	INDICAT <card> <nn> <s> <p> [timer]: Wink red LED on a single ManB packlet for 5 min.
>INDICAT clear 14 r u	INDICAT <clear> <nn> <s> <p>: Return LEDs on a single packlet to a normal working state.
>INDICAT clearall	INDICAT <clearall>: Return all LEDs on all CPs and packlets to a normal working state.
>INDICAT test 14 r 5	INDICAT <test> <nn> <s> [timer]: Light all LEDs on a single CP for 5 min. If the command does not include the [timer] option, the XA-Core default time value is 120 min.
>INDICAT testall 5	INDICAT <testall> [timer]: Light all LEDs on all CPs and packlets for 5 min. The amber LEDs on the shelf interface modules (SIM) CPs do not light. The <test> parameter does not cause an audible alarm nor alarm notification on the MAP terminal. CPs or packlets now under test continue to wink
>INDICAT testall	INDICAT <testall>: Light all LEDs on all CPs and packlets for 120 min.

IO

The IO command is a non-menu command. The IO command instructs the XA-Core system to display the IO MAP level.

Menu selection number

The ETHR MAP level does not display an IO menu number.

Type

Navigational

Parameters

There are no command parameters.

Options

There are no command options.

Command format examples

Example use of the IO command is shown in Table "IO command example". The IO command syntax is shown in the example below:

COMMAND

IO command example

Command example	Command description
>IO	Exit from the current MAP session and display the IO MAP level

LoadFW_

The LoadFW_ command triggers the firmware upgrade process for an ethernet packlet.

Menu selection number

10

Type

Operational

Parameters

The LoadFW_ command requires command parameters. If you do not enter any parameters or you enter invalid parameters, the MAP terminal displays an error message. The MAP terminal prompts you to enter a correct parameter value.

nn

Use the <nn> (slot number) parameter value to indicate the number of the physical shelf slot - 1 to 18 for the front plane, 4 to 15 for the rear plane.

s

Use the <s> (side) parameter value to indicate the packlet location in the physical shelf - front (f) or rear (r).

ETHR MAP level (continued)

p

Use the <p> (packlet) parameter value to indicate the packlet location in the input/output processor circuit pack - upper (u) or lower (l).

FILE new or FILE current

Use the FILE keyword to indicate that the firmware to be downloaded is to be found in a file. Use the <new> or <current> parameter to instruct the XA-Core system to reload the current firmware or load new firmware. (The data-schema table XAFWLOAD lists the current and new firmware loads for the packlet.)

Options

There are no command options.

Command format examples

The LoadFW_ command syntax is shown below. Example use of the LoadFW_ command is shown in the following table.

COMMAND <parameters>

LoadFW_ command examples

Command example	Command description
>LoadFW 14 r l FILE current	Upgrade the firmware in the packlet at 14R, lower. Use the current load (as identified in table XAFWLOAD) as the source.

Responses

The following table explains possible responses to the LoadFW_ command.

MAP responses with associated meanings and actions

Command:	**>loadfw 4 f file new**
MAP response:	`LoadFW 4 f failed`
Meaning:	The LoadFW_ command has failed or been rejected.
Reason:	The MAP displays the reason for the failure. (For a list of possible reasons, see the description of log XAC333 in the chapter, “Understanding XA-Core log reports”.) Record the reason.
Action:	If major faults or the message NO VALID FW IN FLASH appears, load current firmware manually. For minor faults where the system recovers successfully, perform the actions listed on the MAP screen.

PE

The PE command is a non-menu command. The PE command instructs the XA-Core system to display the XA-Core processor element (PE) MAP level.

Menu selection number

The ETHR MAP level does not display a PE menu number.

Type

Navigational

Parameters

There are no command parameters.

Options

There are no command options.

Command format examples

Example use of the PE command is shown in Table "PE command example". The PE command syntax is shown in the example below:

COMMAND

PE command example

Command example	Command description
>PE	Exit from the current MAP session and display the PE MAP level.

Query_

The Query_ command is a common command. The Query_ command causes the MAP terminal to display the following information for a single packlet:

- the product engineering code (PEC)
- the hardware release
- the baseline hardware release (as specified in table PECINV)
- whether the hardware is compatible with the baseline and exception specifications (specifications found in table PECINV)
- the serial number
- the version of the current FW firmware load (the load that is in the circuit pack)
- the baseline FW firmware version (as specified in table FWINV)

ETHR MAP level (continued)

- whether the current FW firmware load is compatible with the baseline and exception specifications (specifications found in table FWINV)
- the hardware/software vintage
- the full ROM version, that is, the full identification of the current FW firmware load (including the version code and any extensions)
- the ethernet MAC address
- the port IP address, which is the software maintenance IP address
- assigned IP address 1, which is the hardware/firmware maintenance IP address, used for hardware maintenance actions and audits
- assigned IP address 2, which is the card IP address

The parameters determine the type of information displayed.

Menu selection number

18

Type

Informational

Parameters

The Query_ command requires command parameters. If you do not enter any parameters or you enter invalid parameters, the MAP terminal displays an error message. The MAP terminal prompts for a correct parameter value.

If you use the Query_ command with the <card> parameter, enter the shelf location parameters. If you use the Query_ command with the <type> parameter or with the <shelf> parameter, do not enter the shelf location parameters.

Card

Use the <card> parameter to instruct the XA-Core system to perform a query on a CP or packlet. Display the description to the MAP terminal. You must use the <card> parameter with the CP or packlet shelf location parameters.

nn

Use the <nn> (slot number) parameter value to indicate the number of the physical shelf slot - 1 to 18 for the front plane, 4 to 15 for the rear plane.

s

Use the <s> (side) parameter value to indicate the CP or packlet location in the physical shelf - front (f) or rear (r).

p

Use the <p> (position) parameter value to indicate the packlet location, upper (u) or lower (l).

Shelf

Use the <shelf> parameter to instruct the XA-Core system to retrieve information about all the components installed in the shelf. The <shelf> parameter retrieves the information you would obtain by entering the Query card command for every circuit pack and packlet in the XA-Core.

Subsystem_name

Use the <subsystem_name> parameter to indicate the name of a subsystem. The value of the subsystem name is either SM, PE, or IO. Use the <subsystem_name> parameter only with the <type> parameter.

Type

Use the <type> parameter to indicate that the query applies to a subsystem of type SM, PE, or IO. Use the <type> parameter with the <subsystem name> parameter. The MAP terminal displays the location of all CPs that match the subsystem type. Do not enter shelf location parameters.

Options

There are no command options.

Command format examples

Example use of the Query_ command is shown in Table "Query_ command examples". The Query_ command syntax is shown in the example below:

COMMAND <parameter>

Query_ command examples (Sheet 1 of 2)

Command example	Command description
>QUERY card 14 r	QUERY <card> <nn> <s>: Display the PEC, serial number, insertion/activation dates software load, firmware version and working state for the CP.

ETHR MAP level (continued)

Query_ command examples (Sheet 2 of 2)

Command example	Command description
>QUERY card 7 r u	QUERY <card> <nn> <s> <p>: Display the PEC, serial number, insertion/ activation dates, software load, firmware version, the port's MAC address, fixed IP address, software assigned IP address and working state for the packlet.
>QUERY shelf	QUERY <shelf>: Display the PEC, serial number, insertion/activation dates, software load, firmware version, and working state for every CP and packlet in the shelf.
>QUERY type io	QUERY <type> <subsystem_name>: Display subsystem name and location of all CPs and packlets that match the subsystem type.

Quit

The Quit command is a common command. The Quit command instructs the XA-Core system to exit from the current MAP session. You can exit to any MAP level that is higher in the MAP level hierarchy.

Note: The XA-Core system continues to execute any previous commands entered.

Menu selection number

0

Type

Navigational

Parameters

The Quit command parameters are optional.

All

Use the <all> parameter to terminate all XA-Core MAP sessions and display the CI prompt.

Incrname

Use the <incrname> parameter to end the current MAP session and display a MAP level higher in the MAP system hierarchy. Enter a MAP level name. The XA-Core system displays the MAP level that is one level higher in the MAP system hierarchy than the <incrname> (increment name) value.

Nlevel

Use the <nlevel> parameter to end the current MAP session and display a MAP level higher in the MAP system hierarchy. Enter a number value to represent the number of DMS MAP levels to step back in the MAP system hierarchy.

Options

There are no command options.

Command format examples

Example use of the Quit command is shown in Table "Quit command examples". The Quit command syntax is shown in the example below:

COMMAND <parameter>

Quit command examples

Command example	Command description
>QUIT	Use the Quit command with no parameters to exit from the current MAP session. Display a MAP level that is one level above the current MAP session level.
>QUIT mtc	QUIT <incrname>: Exit the current MAP session. Display the MAP level that is one level above the indicated MAP level name.
>QUIT 2	QUIT <nlevel>: Exit the current MAP session. Display the MAP level that is two levels above the current MAP session in the MAP hierarchy.
>QUIT all	QUIT <all>: Exit from all MAP sessions and display the CI prompt.

ETHR MAP level (continued)

RTS_

The RTS_ command instructs the XA-Core system to test a ManB or SysB packlet or device (a port or a link), and return the packlet or device to service.

You can apply this command to ethernet packlets, to ethernet ports and links on ethernet packlets, and to ethernet ports and links on HIOP CPs.

Menu selection number

8

Type

Operational

Parameters

The RTS_ command requires parameters. If you do not enter any parameters or you enter invalid parameters, the MAP terminal displays an error message. The MAP terminal prompts you to enter a correct parameter value.

The command parameters are as follows.

nn

The <nn> (slot number) parameter is always required. The value indicates the number of the physical shelf slot - 1 to 18 for the front plane, 4 to 15 for the rear plane.

s

The <s> (side) parameter is always required. The value indicates the location in the physical shelf - front (f) or rear (r).

p

The <p> (position) parameter is required only if you are applying the command to an ethernet packlet or to an ethernet device (a port or a link) on an ethernet packlet. The value indicates the packlet location, upper (u) or lower (l).

device

Use the optional [device] parameter to indicate that the command applies to a device. You can use the RTS_ command on the following ethernet devices: port or link.

Options

You can enter the following options in the command statement.

Nowait

Use the [nowait] option with the RTS_ command. Display the MAP prompt to allow you to enter other commands while the system returns the RTIF or device to service.

Command format examples

Example use of the RTS command is shown in Table "RTS command examples". The RTS command syntax is shown in the example below:

COMMAND <parameter> [option]

RTS command examples

Command example	Command description
>RTS 14 r u	RTS <nn> <s> <p>: Test the ethernet packlet and and return it to service.
>RTS 14 r u nowait	RTS <nn> <s> <p> [nowait]: Test the ethernet packlet and return it to service. Display the MAP prompt and enter other commands.
>RTS 14 r u port	RTS <nn> <s> <p> <device>: Test the ethernet port on an ethernet packlet, and return the port to service.
>RTS 14 r port	RTS <nn> <s> <device>: Test the ethernet port on an HIOP CP, and return the port to service.
>RTS 14 r u link	RTS <nn> <s> <p> <device>: Test the ethernet link supported by an ethernet packlet, and return the link to service.
>RTS 14 r link	RTS <nn> <s> <device>: Test the ethernet link supported by an HIOP CP, and return the link to service.
>RTS 14 r u link nowait	RTS <nn> <s> <p> <device> [nowait]: Test the ethernet link supported by an ethernet packlet, and return the link to service. Display the MAP prompt and enter other commands.

SM

The SM command is a non-menu command. The SM command instructs the XA-Core system to display the shared memory (SM) MAP level.

ETHR MAP level (continued)

Menu selection number

The ETHR MAP does not display an SM menu number.

Type

Navigational

Parameters

There are no command parameters.

Options

There are no command options.

Command format examples

Example use of the SM command is shown in Table "SM command example". The SM command syntax is shown in the example below:

COMMAND

SM command example

Command example	Command description
>SM	Exit from the current MAP session and display the SM MAP level.

Tape

The Tape command is a non-menu command. The Tape command instructs the system to display the XA-Core Tape MAP.

Menu selection number

The ETHR MAP does not display a Tape menu number.

Type

Navigational

Parameters

There are no command parameters.

Options

There are no command options.

Command format examples

Example use of the Tape command is shown in Table "Tape command example". The Tape command syntax is shown in the example below:

COMMAND

Tape command example

Command example	Command description
>TAPE	Exit from current MAP session and display the Tape MAP level

Tst_

The Test (Tst) command performs a test on an ethernet packlet or device (a port or a link). The type of test depends on the working state (in-service or out-of-service) of the ethernet packlet or device.

You can apply this command to ethernet packlets, ethernet ports and links on ethernet packlets, and to ethernet ports and links on HIOP CPs.

An in-service test performs non-destructive tests. An out-of-service test performs non-destructive and destructive tests.

Menu selection number

6

Type

Operational

Parameters

The Tst_ command requires command parameters. If you do not enter any parameters or you enter invalid parameters, the MAP terminal displays an error message. The MAP terminal prompts you to enter a correct parameter value.

The command parameters are as follows.

nn

The <nn> (slot number) parameter is always required. The value indicates the number of the physical shelf slot - 1 to 18 for the front plane, 4 to 15 for the rear plane.

s

The <s> (side) parameter is always required. The value indicates the location in the physical shelf - front (f) or rear (r).

ETHR MAP level (continued)

p

The <p> (position) parameter is required only if you are applying the command to an ethernet packlet, or to a port on an ethernet packlet, or to a link supported by an ethernet packlet. The value indicates the packlet location, upper (u) or lower (l).

device

Use the optional [device] parameter to indicate that the command applies to a device. You can use the Tst_ command on the following ethernet devices: port or link.

Options

You can use the following command option in the command statement.

Nowait

Use the [nowait] option with the Tst_ command. Display the MAP prompt to allow you to enter other commands while the system performs the tests.

Command format examples

Example use of the Tst_ command is shown in Table "Tst_ command examples". The Tst_ command syntax is shown in the example below:

COMMAND <parameter> [option]

Tst_ command examples (Sheet 1 of 2)

Command example	Command description
>TST 14 r u	TST <nn> <s> <p>: Perform a test on the indicated ethernet packlet.
>TST 14 r u nowait	TST <nn> <s> <p> [nowait]: Perform a test on the indicated ethernet packlet. Display the MAP prompt and continue with other MAP tasks.
>TST- 14 r u port	TST <nn> <s> <p> <device>: Perform a test on an ethernet port on an ethernet packlet.
>TST- 14 r port	TST <nn> <s> <device>: Perform a test on an ethernet port on an HIOP CP.
>TST 14 r u link	TST <nn> <s> <p> <device>: Perform a test on an ethernet link supported by an ethernet packlet.

Tst_ command examples (Sheet 2 of 2)

Command example	Command description
>TST 14 r link	TST <nn> <s> <device>: Perform a test on an ethernet link supported by an HIOP CP.
>TST 14 r u link nowait	TST <nn> <s> <p> <device> [nowait]: Perform test on an ethernet link supported by an ethernet packlet. Display the MAP prompt and continue with other MAP tasks

Uneq

You can apply the uneq_ command to an ethernet packlet, or to an ethernet link supported by an ethernet packlet or by an HIOP CP.

If applied to an ethernet packlet, the command removes the packlet from the inventory.

If applied to an ethernet link, the command prevents the link from being used.

Menu selection number

12

Type

Operational

Limitations and restrictions

If applied to an ethernet packlet, the command will only execute on a ManB slot. If the slot is not ManB, the command will fail. Before applying the command to a packlet, remove the packlet from the slot.

Before applying the command to a link, you must physically remove the transmission medium from the port.

Parameters

The uneq command requires command parameters. If you do not enter any parameters or you enter invalid parameters, the MAP terminal displays an error message. The MAP terminal prompts you to enter a correct parameter value.

The command parameters are as follows.

ETHR MAP level (continued)

nn

The <nn> (slot number) parameter is always required. The value indicates the number of the physical shelf slot - 1 to 18 for the front plane, 4 to 15 for the rear plane.

s

The <s> (side) parameter is always required. The value indicates the location in the physical shelf - front (f) or rear (r).

p

The <p> (position) parameter is required only if you are applying the command to an ethernet packlet, or to a port on an ethernet packlet or to an ethernet device (a link) supported by an ethernet packlet. The value indicates the packlet location, upper (u) or lower (l).

device

Use the optional [device] parameter to indicate that the command applies to a device. You can use the Uneq_ command on the following ethernet device: link.

Options

There are no command options.

Command format examples

Example use of the uneq command is shown in Table "Uneq_ command examples". The uneq command syntax is shown in the example below:

COMMAND <parameter>

Uneq_ command examples

Command example	Command description
>UNEQ 14 r u	UNEQ <nn> <s> <p>: Unequip an ethernet packlet
>UNEQ 14 r u link	UNEQ <nn> <s> <p> <device>: Unequip the ethernet link supported by an ethernet packlet
>UNEQ 14 r link	UNEQ <nn> <s> <device>: Unequip the ethernet link supported by an HIOP CP.

XACMtc

The XACMtc command is a non-menu command. The XACMtc command instructs the XA-Core system to display the XA-Core maintenance (XACMtc) MAP level.

Menu selection number

The ETHR MAP level does not display an XACMtc menu number.

Type

Navigational

Parameters

There are no command parameters.

Options

There are no command options.

Command format examples

Example use of the XACMtc command is shown in Table "XACMtc command example". The XACMtc command syntax is shown in the example below:

COMMAND

XACMtc command example

Command example	Command description
>XACMTC	Exit from the current MAP session and display the XACMtc MAP level.

This page is left blank intentionally.

RTIF MAP level

Introduction

Use the XA-Core reset terminal interface (RTIF) MAP to perform maintenance actions on RTIF devices and on RTIF packlets, if equipped. Select the RTIF option from any XA-Core MAP level to display the XA-Core RTIF MAP level.

RTIF MAP level

The RTIF MAP level is an interface that allows operating company personnel to monitor and perform system maintenance activities. The contents of the MAP display depends on whether the RTIF links are supported by RTIF packlets or by HCMIC circuit packs. (You will always see one case or the other because the mixing of RTIF packlets and HCMIC circuit packs in an XA-Core shelf is not permitted.)

The following figure shows the RTIF MAP level as it appears when the RTIF links are supported by RTIF packlets. In each entry, the “Packlet” field displays the position of the packlet, and the “Status” field displays the status of the packlet. Each entry also displays the status of the following devices:

RTIF MAP level, showing data for RTIF packlets in slots 4 rear and 15 rear

```
 XAC        MS       IOD      Net       PM      CCS      Lns     Trks     Ext      APPL
 .          .        .        .         .       .        .       .        .        .

RTIF            Front:   111111111  Rear: 111111     SM     PE     IO    PKLT
 0 Quit         123456789012345678  456789012345     .      .      .     .
 2            Sta:-.-.--..-..-.-..-   .--.--------.    0      0      0     0
 3            Dep:
 4            Typ:                    *          *
 5            Slot: Side: Packlet: Status   Port0:  Port1  Link0  Link1:
 6 Tst_         4   Rear  Upper    .        .       .
 7 Bsy_        15   Rear  Upper    .        .       .
 8 RTS_
 9
10
11
12 Uneq_
13
14 Alarm_
15
16
17 Indicat_
18 Query_
 XMAP0
Time  14:12   >
```

- Port0. This represents the local RTIF port and link. The interface does not separate the port and link.
- Port1. This represents the remote RTIF port and link. The interface does not separate the port and link.

RTIF MAP level (continued)

The following figure shows the RTIF MAP level as it appears when the RTIF links are supported by the RTIF sections of HCMIC circuit packs. In each entry, the “Packlet” and “Status” fields are blank because there are no packlets. Each entry displays the status of the following devices:

- Port0. This is the local port.
- Port1. This is the remote port.
- Link0. This is the local link.
- Link1. This is the remote link.

RTIF MAP level, showing data for the RTIF sections of HCMIC CPs in slots 4 rear and 15 rear

```
 XAC       MS      IOD     Net      PM     CCS     Lns    Trks    Ext     APPL
 .         .       .       .        .      .       .      .       .       .

RTIF            Front:   111111111  Rear: 111111     SM    PE    IO   PKLT
 0 Quit         123456789012345678  456789012345     .     .     .    .
 2            Sta:-.-.--..-..-.-..-   .--.-------.     0     0     0    0
 3            Dep:
 4            Typ:                    *          *
 5            Slot: Side: Packlet: Status   Port0:  Port1  Link0  Link1:
 6 Tst_         4   Rear                    .       .      .      .
 7 Bsy_        15   Rear                    .       .      .      .
 8 RTS_
 9
10
11
12 Uneq_
13
14 Alarm_
15
16
17 Indicat_
18 Query_
 XMAP0
Time  14:12   >
```

RTIF menu commands

Menu commands appear on the MAP command menu. Non-menu commands do not appear on the MAP menu list. Enter both menu and non-menu commands in the command interpreter input area.

Table "Summary of RTIF MAP commands" contains a summary description of RTIF MAP level commands.

Summary of RTIF MAP commands (Sheet 1 of 2)

Command	Menu #	Type	Function
Alarm_	14	Op/Info	Enable, disable or query alarm notifications
AMDI	Non-menu	Nav	Display the AMDI MAP level

RTIF MAP level (continued)

Summary of RTIF MAP commands (Sheet 2 of 2)

Command	Menu #	Type	Function
Bsy_	7	Op	Place one of the following in the ManB state: an RTIF packlet, or a port on an RTIF packlet, or a port or link on the RTIF section of an HCMIC circuit pack.
CMIC	Non-menu	Nav	Display the CMIC MAP level
Cntrs_	15	Info	Display the non-zero system-busy (SysB) transition counters, or reset the SysB transition counters for a specified component
Disk	Non-menu	Nav	Display the Disk MAP level
ETHR	Non-menu	Nav	Display the ETHR MAP level
Indicat_	17	Info	Cause a CP or packlet LED to wink or clear
IO	Non-menu	Nav	Display the IO MAP level
PE	Non-menu	Nav	Display the PE MAP level
Query_	18	Info	List information for any CP or packlet
Quit	0	Nav	Exit from the MAP level now on display and display the XAC MAP level
RTS_	8	Op	Test and return to service an RTIF packlet, or a port on an RTIF packlet, or a port or link on the RTIF section of an HCMIC circuit pack.
SM	Non-menu	Nav	Display the SM MAP level
Tape	Non-menu	Nav	Display the Tape MAP level
Tst_	6	Op	Perform a test on an RTIF packlet, or on a port on an RTIF packlet, or on a port or link on the RTIF section of an HCMIC circuit pack.
Uneq_	12	Op	Unequip an RTIF packlet or unequip an RTIF link supported by the RTIF section of an HCMIC circuit pack
XACMtc	Non-menu	Nav	Display the XACMtc MAP level

RTIF MAP level (continued)

Alarm_

The Alarm_ command is a common menu command. The Alarm_ command allows you to perform the following tasks:

- permit notification for selected alarms
- disable notification for selected alarms
- query the XA-Core system to identify alarm conditions or examine the status of alarms

Menu selection number

14

Type

Operational or Informational

Parameters

The Alarm_ command requires command parameters. If you do not enter any parameters or you enter invalid parameters, the MAP terminal prompts you to enter a correct parameter value. The Alarm_ command requires at least one of the following command parameters.

Alarm_name

Use the <alarm_name> parameter to indicate the name of the XA-Core system alarm. You can use the <alarm_name> parameter with the <disable> and <enable> parameters.

All

Use the <all> parameter to enable or disable notification for all alarms (use with the <enable> or <disable> parameter.

Disable

Use the <disable> parameter to prevent the XA-Core system from displaying alarm notification messages on the MAP screen. You can disable either one alarm at a time or all alarms. Use the <disable> parameter with the Alarm_ command and <alarm_name> parameter to disable a single alarm. Use the <disable> parameter with the <all> parameter to disable all XA-Core alarms. The <disable> parameter remains active until you enable the alarm or the system performs a restart.

Enable

Use the <enable> parameter to instruct the XA-Core system to display an alarm notification message on the MAP terminal. You can enable either one alarm or all alarms. Use the <enable> parameter together with the Alarm_

command and <alarm_name> parameter to enable a single alarm. Use the <enable> parameter with the <all> parameter to enable all XA-Core alarms.

Raised

Use the <raised> parameter to display all active alarms, the alarm severity and enabled/disabled status. You can use the <raised> parameter with the [enabled] or [disabled] options. If you do not enter any options, the XA-Core system MAP displays all active, enabled and disabled alarms.

Options

You can enter one of the following command options in the command statement.

Disabled

Use the [disabled] option with the <raised> parameter. The option instructs the XA-Core system to display all active alarms that have a disabled status.

Enabled

Use the [enabled] option with the <raised> parameter. The option instructs the XA-Core system to display all active alarms that have an enabled status.

Command format examples

Example use of the Alarm_ command is shown in Table "Alarm_ command examples". The Alarm_ command syntax is shown in the example below:

COMMAND <parameter> [option]

Alarm_ command examples (Sheet 1 of 2)

Command example	Command description
>ALARM tape	ALARM <alarm_name>: Display the alarm severity and status for a single alarm.
>ALARM all	ALARM <all>: Display the alarm severity and status for all alarms.
>ALARM all disable	ALARM <all> <disable>: Disable notification for all alarms.
>ALARM tape disable	ALARM <alarm_name> <disable>: Disable notification for a single alarm.
>ALARM all enable	ALARM <all> <enable>: Enable notification for all alarms.

RTIF MAP level (continued)

Alarm_ command examples (Sheet 2 of 2)

Command example	Command description
>ALARM tape enable	ALARM <alarm_name> <enable>: Enable notification for a single alarm.
>ALARM raised	ALARM <raised>: Display all active alarms
>ALARM raised enabled	ALARM <raised> [enabled]: Display active alarms that have an enabled status
>ALARM raised disabled	ALARM <raised> [disabled]: Display active alarms that have an disabled status

AMDI

The AMDI command is a non-menu command. The AMDI command instructs the XA-Core system to display the AMDI MAP level.

Menu selection number

The RTIF MAP level does not display an AMDI menu number.

Type

Navigational

Parameters

There are no command parameters.

Options

There are no command options.

Command format examples

Example use of the AMDI command is shown in Table "AMDI command examples". The AMDI command syntax is shown in the example below:

COMMAND

AMDI command examples

Command example	Command description
>AMDI	Exit from the current MAP session and display the AMDI MAP level.

Bsy_

The Bsy_ command can do the following things.

- If the RTIF links are supported by an RTIF packlet, the command can place an InSv, SysB or CBsy RTIF packlet, local port (port0), or remote port (port1) in a ManB state. The XA-Core system does not allow the last, in-service (InSv) RTIF packlet to be put in a ManB state.
- If the RTIF links are supported by the RTIF section of an HCMIC circuit pack, the command can place any of the following devices in the ManB state: port0, port1, link0, or link1.

Menu selection number

7

Type

Operational

Parameters

The Bsy_ command requires command parameters. If you do not enter any parameters or you enter invalid parameters, the MAP terminal displays an error message. The MAP terminal prompts you to enter a correct parameter value. The Bsy_ command requires the following command parameters.

nn

Use the <nn> (slot number) parameter value to indicate the number of the physical shelf slot - 1 to 18.

s

Use the <s> (side) parameter value to indicate the packlet location in the physical shelf - front (f) or rear (r).

p

If you want to busy an RTIF packlet, or an RTIF link that is supported by a packlet, use the <p> (position) parameter value to indicate the packlet location in an input/output processor (IOP) - upper (u) or lower (l).

device

Use the optional <device> parameter value to indicate that the command applies to a device. If the RTIF links are supported by an RTIF packlet, use the <device> parameter to identify the local port (port0) or the remote port (port1). If the RTIF links are supported by the RTIF section of an HCMIC circuit pack, use the <device> parameter to identify the local port (port0) or the remote port (port1) or the local link (link0) or the remote link (link1).

RTIF MAP level (continued)

Options

You can enter the following command options in the command statement.

Force

The [force] option instructs the system to bypass redundancy checks and continue to execute the command.

When you use the [force] option in this MAP level, the system displays a message warning that the command will take the packlet or device out of service, and asking you to confirm the command.

If you confirm the command, the system may display another warning message and ask you to re-confirm the command. The system does this if some of the IO components in the system are unstable. The warning message identifies the unstable IO components, and tells you that executing the command might jeopardize the system further.

The XA-Core system ignores the [force] option if you attempt to place the last remaining RTIF packlet in a ManB state.

Use the [force] option with caution.

Noprompt

Use the [noprompt] option to bypass system prompts and continue to execute the command. Use the [noprompt] option with caution. System messages and prompts help you to prevent loss of information.

Format examples

Example use of the Bsy_ command is shown in Table "Bsy_ command examples". The Bsy_ command syntax is shown in the example below:

COMMAND <parameter> [option]

Bsy_ command examples (Sheet 1 of 2)

Command use	Command description
>BSY 4 r u	BSY <nn> <s> <p>: Place the RTIF packlet in a ManB state.
>BSY 4 r u port1	BSY <nn> <s> <p> <device>: Place the RTIF remote port on an RTIF packlet in a ManB state.

Bsy_ command examples (Sheet 2 of 2)

Command use	Command description
>BSY 15 r link0	BSY <nn> <s> <device>: Place the local link supported by the RTIF section of an HCMIC circuit pack in a ManB state.
>BSY 4 r u force	BSY <nn> <s> <p> [force]: Place the RTIF packlet in a ManB state. Ignore reduced redundancy conditions.
>BSY 4 r u noprompt	BSY <nn> <s> [noprompt]: Place the RTIF packlet in a ManB state. Block warning/prompt messages.
>BSY 4 r u force noprompt	BSY <nn> <s> [force] [noprompt]: Place the RTIF packlet in a ManB state. Ignore possible error conditions. Block warning/prompt messages.

CMIC

The CMIC command is a non-menu command. The CMIC command instructs the XA-Core system to display the CMIC MAP level.

Menu selection number

The RTIF MAP level does not display a CMIC menu number.

Type

Navigational

Parameters

There are no command parameters.

Options

There are no command options.

Command format examples

Example use of the CMIC command is shown in Table "CMIC command examples". The CMIC command syntax is shown in the example below:

RTIF MAP level (continued)

COMMAND

CMIC command examples

Command example	Command description
>CMIC	Exit from the current MAP session and display the CMIC MAP level.

Cntrs_

The Cntrs_ command instructs the XA-Core system to either display the current values of all non-zero system-busy (SysB) transition counters, or to reset to zero the SysB transition counters for a specified component. A SysB transition counter counts the number of times that a component's state changes from in-service to system-busy.

The system maintains separate SysB transition counters for each instance of each of the following components:

- IOP, HIOP, and HCMIC circuit packs
- all packlets: disk, tape, CMIC, RTIF, Ethernet, and AMDI
- sections of HIOP circuit packs that are supporting ETHR and AMDI connections
- sections of HCMIC circuit packs that are supporting CMIC, RTIF, and ETHR connections
- time-of-day (TOD) devices
- ports

For each component, the system counts the SysB transitions that occur during the current six-hour interval. It also remembers the totals from the seven preceding six-hour intervals. It sums the totals from the seven preceding intervals and the current interval, to obtain the total number of SysB transitions occurring during a 42-to-48-hour period.

The monitored components are divided into groups and for each group there are minor and major threshold values. The minor and major thresholds are for a 42-to-48-hour period. If a component's total number of SysB transitions for the 42-to-48-hour period equals or exceeds the minor threshold for its component group, and if a SysBTh minor or major alarm is not already in effect, the system raises a SysBTh minor alarm (unless the alarm has been disabled). If a component's total number of SysB transitions for the 42-to-48-hour period equals or exceeds the major threshold for its component group, and if a SysBTh major alarm is not already in effect, the system raises

a SysBTh major alarm (unless the alarm has been disabled). For information on the component groups, see the description of the "Query" parameter, below. For information on the SysBTh minor and major alarms and for information on disabling alarms, see the *XA-Core Maintenance Manual*, 297-8991-510.

Menu selection number

15

Type

Informational

Parameters

The Cntrs_ command requires either the <query> parameter or the <reset> parameter.

If you use the <query> parameter, no other parameters are permitted.

If you use the <reset> parameter, you must use additional parameters to specify a component: The <nn> and <s> parameters are required in all CNTRS RESET commands. The <p> parameter is required in some CNTRS RESET commands. The <device> parameter is required in some CNTRS RESET commands.

Query

The <query> parameter instructs the XA-Core system to display the following information.

- Either the value of all system-busy (SysB) transition counters that are greater than zero, or the message: `No SysB transitions on any components in the last 42-48 hrs.` A SysB transition counter counts the number of times that a component goes from the in-service state to the SysB state. For a list of the components for which the system maintains SysB transition counters, see the beginning of this "Cntrs_" section. The system maintains a separate SysB transition counter for each instance of each listed component, for example, for each TOD device. For each component, the system counts the SysB transitions that occur during the current six-hour interval. It also maintains a record of the totals from the seven preceding six-hour intervals. It sums the totals from the seven preceding intervals and the current interval, to obtain the total number of SysB transitions occurring during a 42-to-48-hour period.
- The values of the minor and major thresholds for each component group. (Component groups are described below.) The thresholds are shown in an output line that resembles the following:

RTIF MAP level (continued)

SysBTh thresholds: (Min/Maj): PE=2/6; SM=2/4; IOhw=2/6; IOlk=2/8

> ***Note:*** The threshold values shown in the example are for illustrative purposes only. If the values shown in the example differ from the output of the CNTRS QUERY command, you should regard the command output as correct.

For each component group, a slash separates the minor and major threshold values. For example, “SM=2/4” means that the minor threshold for the SM group is 2, and the major threshold is 4.

The minor and major thresholds are for a 42-to-48-hour period. If a component’s total number of SysB transitions for the 42-to-48-hour period equals or exceeds the minor threshold for that group, and if a SysBTh minor or major alarm is not already in effect, the system raises a SysBTh minor alarm (unless the alarm has been disabled). If a component’s total number of SysB transitions for the 42-to-48-hour period equals or exceeds the major threshold for that group, and if a SysBTh major alarm is not already in effect, the system raises a SysBTh major alarm (unless the alarm has been disabled). For information on the SysBTh minor and major alarms and for information on disabling alarms, see the *XA-Core Maintenance Manual*, 297-8991-510.

The component groups are as follows.

— The PE group includes PE circuit packs.

— The SM group includes SM circuit packs.

— The IO link (IOlk) group includes IO links.

— The IO hardware (IOhw) group includes IOP, HIOP, and HCMIC circuit packs, all packlets, sections of HIOP circuit packs that are supporting ETHR and AMDI connections, sections of HCMIC circuit packs that are supporting RTIF, ETHR, and CMIC connections, time-of-day (TOD) devices, and ports.

Reset

The <reset> parameter instructs the system to reset to zero the value of the system-busy (SysB) transition counters for a specific component. The parameters following the <reset> parameter specify the component.

Use the <reset> parameter with the <nn> and <s> shelf location parameters for a circuit pack or with the <nn>, <s>, and <p> shelf location parameters for a

packlet. With the <reset> parameter, use the <device> parameter to identify a port or a link or a time-of-day device (TOD).

Note 1: Ordinarily, you should use the <reset> parameter only for links. Use it after you have corrected a link fault, to reset the SysB transition counters for the link.

Note 2: Ordinarily, for all components other than links, you should let the system reset the counters automatically. The system resets a component's counters automatically when you replace the component. Alternatively, if the SysB transitions stop occurring, the counters will revert to zero after seven six-hour intervals. At the beginning of each six-hour interval, the system starts a six-hour transition counter at zero and it adjusts the 42-to-48-hour total to reflect the seven preceding six-hour intervals. If the component goes through seven consecutive six-hour intervals without a SysB transition, all the counters revert to zero.

nn

Use the <nn> (slot number) parameter value to indicate the number of the physical shelf slot where a CP or packlet is located - 1 to 18. The component could be the CP or packlet, or it could be a device on the CP or packlet. The <nn> parameter is required in all cases.

s

Use the <s> (side) parameter value to indicate the location in the physical shelf of a CP or packlet - front (f) or rear (r). The component could be the CP or packlet, or it could be a device on the CP or packlet. The <s> parameter is required in all cases.

p

Use the <p> (position) parameter value to indicate the packlet location in an input/output processor (IOP) - upper (u) or lower (l). The <p> parameter is required if the component is a packlet or a device on a packlet.

Device

Use the <device> parameter if the component is a link, a port, or a TOD device.

Options

There are no command options.

Command format examples

Example use of the Cntrs_ command is shown in Table "Cntrs_ command examples". The Cntrs_ command syntax is shown in the example below.

RTIF MAP level (continued)

COMMAND <parameter>

Cntrs_ command examples

Command example	Command description
>Cntrs query	CNTRS QUERY: Display the values of all non-zero SysB transition counters, and display the minor and major threshold values.
>Cntrs reset 14 r	CNTRS RESET <nn> <s>: Reset the SysB transition counter for the circuit pack in slot 14R (an IOP or HIOP circuit pack).
>Cntrs reset 15 r u	CNTRS RESET <nn> <s> <p>: Reset the SysB transition counter for the packlet in slot 15R, upper (a CMIC packlet).
>Cntrs reset 6 r u link	CNTRS RESET <nn> <s> <p> <device>: Reset the SysB transition counter for the link on the ethernet packlet in slot 6R, upper.
>Cntrs reset 4 r l port0	CNTRS RESET <nn> <s> <p> <device>: Reset the SysB transition counter for port0 (the local port) on the RTIF packlet in slot 4R, lower.
>Cntrs reset 13 r l link0	CNTRS RESET <nn> <s> <p> <device>: Reset the SysB transition counter for link0 on the AMDI packlet in slot 13R, lower.
>Cntrs reset 14 r link1	CNTRS RESET <nn> <s> <device>: Reset the SysB transition counter for link1 on the AMDI section of the HIOP circuit pack in slot 14R.
>Cntrs reset 15 r tod0	CNTRS RESET <nn> <s> <device>: Reset the SysB transition counter for the tod0 time-of-day device on the CMIC section of the HCMIC circuit pack in slot 15R.

Disk

The Disk command is a non-menu command. The Disk command instructs the XA-Core system to display the Disk MAP level.

Menu selection number

The RTIF MAP level does not display a Disk menu number.

Type

Navigational

Parameters

There are no command parameters.

Options

There are no command options.

Command format examples

Example use of the Disk command is shown in Table "Disk_ command examples". The Disk command syntax is shown in the example below:

COMMAND

Disk_ command examples

Command example	Command description
>DISK	Exit from current MAP session and display the Disk MAP level

ETHR

The ETHR command is a non-menu command. The ETHR command instructs the XA-Core system to display the ETHR MAP level.

Menu selection number

The RTIF MAP level does not display an ETHR menu number.

Type

Navigational

Parameters

There are no command parameters.

Options

There are no command options.

Command format examples

Example use of the ETHR command is shown in Table "ETHR command examples". The ETHR command syntax is shown in the example below:

RTIF MAP level (continued)

COMMAND

ETHR command examples

Command example	Command description
>ETHR	Exit from the current MAP session and display the ETHR MAP level.

Indicat_

The Indicat_ command is a common command. The command causes LEDs on CPs or packlets to wink or illuminate. The command allows you to locate a device on the physical shelf or to make sure all LEDs work. CPs and packlets must be in a ManB state before you use the Indicat_ card command.

> ***Note:*** If you use the Indicat_ command with the <test> or <testall> parameters, CPs and packlets do not have to be in a ManB state.

Menu selection number

17

Type

Informational

Parameters

The Indicat_ command requires parameters. If you do not enter any parameters or you enter invalid parameters, the MAP terminal displays an error message. The MAP terminal prompts you to enter a correct parameter value.

The Indicat_ command requires at least two of the shelf location parameters. In addition to the shelf location parameters, you can enter one of the following parameters.

Card

Use the <card> parameter to cause the red triangular LED of a SysB (system busy) or ManB CP or packlet to wink. You can use the [timer] option with the <card> parameter.

Clear

Use the <clear> parameter to return LEDs to a normal working state on a single winking or testing CP or packlet. Use the <clear> parameter with the shelf location parameters.

Clearall

Use the <clearall> parameter to return all winking or testing LEDs on all CPs or packlets to a normal working state.

Test

Use the <test> parameter to light the red LED on a single CP or packlet. The CP or packlet does not have to be in a ManB state. LEDs already winking on other CPs or packlets continue to wink. Use the <test> parameter with the shelf location parameters. You can use the <test> parameter with the [timer] option.

Testall

Use the <testall> parameter to light all LEDs on all CPs and packlets. The CPs and packlets do not have to be in a ManB state. LEDs already winking on other CPs or packlets continue to wink. You can use the <testall> parameter with the [timer] option. Do not use the shelf location parameters with the <testall> parameter.

nn

Use the <nn> (slot number) parameter value to indicate the number of the physical shelf slot - 1 to 18.

s

Use the <s> (side) parameter value to indicate the CP or packlet location in the physical shelf - front (f) or rear (r).

p

Use the <p> (position) parameter value to indicate the packlet location in an input/output processor (IOP) - upper (u) or lower (l).

Options

You can enter the following option in the command statement.

Timer

Use the [timer] option to indicate the time (in minutes) to light or wink LEDs. The XA-Core system turns the LEDs off when the time expires. The minimum time period is 1 min. The maximum time period is 999 min. If you do not define a time period, the default time period is 120 min.

RTIF MAP level (continued)

Use the [timer] option as follows:

- use the [timer] option with the <card> parameter to wink a red LED on a single CP or packlet for a period of time.
- use the [timer] option with the <test> parameter to light the red LED on a CP or packlet for a period of time.
- use the [timer] option with the <testall> parameter to light the red LED on all CPs and packlets for a period of time.

Command format examples

Example use of the Indicat_ command is shown in Table "Indicat_ command examples". The Indicat_ command syntax is shown in the example below:

COMMAND <parameter> [option]

Indicat_ command examples (Sheet 1 of 2)

Command example	Command description
>INDICAT card 4 r u	INDICAT <card> <nn> <s> <p>: Wink red LED on a single ManB packlet.
>INDICAT card 4 r u 5	INDICAT <card> <nn> <s> <p> [timer]: Wink red LED on a single ManB packlet for 5 min.
>INDICAT clear 4 r u	INDICAT <clear> <nn> <s> <p>: Return LEDs on a single packlet to a normal working state.
>INDICAT clearall	INDICAT <clearall>: Return all LEDs on all CPs and packlets to a normal working state.
>INDICAT test 4 r 5	INDICAT <test> <nn> <s> [timer]: Light all LEDs on a single CP for 5 min. If the command does not include the [timer] option, the XA-Core default time value is 120 min.
>INDICAT testall 5	INDICAT <testall> [timer]: Light all LEDs on all CPs and packlets for 5 min. The amber LEDs on the shelf interface modules (SIM) CPs do not light. The <test> parameter does not cause an audible alarm nor alarm notification on the MAP terminal. CPs or packlets now under test continue to wink

Indicat_ command examples (Sheet 2 of 2)

Command example	Command description
>INDICAT testall	INDICAT <testall>: Light all LEDs on all CPs and packlets for 120 min.

IO

The IO command is a non-menu command. The IO command instructs the XA-Core system to display the IO MAP level.

Menu selection number

The RTIF MAP level does not display an IO menu number.

Type

Navigational

Parameters

There are no command parameters.

Options

There are no command options.

Command format examples

Example use of the IO command is shown in Table "IO command example". The IO command syntax is shown in the example below:

COMMAND

IO command example

Command example	Command description
>IO	Exit from the current MAP session and display the IO MAP level

PE

The PE command is a non-menu command. The PE command instructs the XA-Core system to display the XA-Core processor element (PE) MAP level.

Menu selection number

The RTIF MAP level does not display a PE menu number.

RTIF MAP level (continued)

Type

Navigational

Parameters

There are no command parameters.

Options

There are no command options.

Command format examples

Example use of the PE command is shown in Table "PE command example". The PE command syntax is shown in the example below:

COMMAND

PE command example

Command example	Command description
>PE	Exit from the current MAP session and display the PE MAP level.

Query_

The Query_ command is a common command. The Query_ command causes the MAP terminal to display the following information for a single CP or packlet:

- the product engineering code (PEC)
- the hardware release
- the baseline hardware release (as specified in table PECINV)
- whether the hardware is compatible with the baseline and exception specifications (specifications found in table PECINV)
- the serial number

The parameters determine the type of information displayed.

Menu selection number

18

Type

Informational

Parameters

The Query_ command requires command parameters. If you do not enter any parameters or you enter invalid parameters, the MAP terminal displays an error message. The MAP terminal prompts you to enter a correct parameter value.

If you use the Query_ command with the <card> parameter, enter the shelf location parameters. If you use the Query_ command with the <type> parameter or with the <shelf> parameter, do not enter the shelf location parameters.

Card

Use the <card> parameter to instruct the XA-Core system to perform a query on a CP or packlet. Display the description to the MAP terminal. You must use the <card> parameter with the CP or packlet shelf location parameters.

nn

Use the <nn> (slot number) parameter value to indicate the number of the physical shelf slot - 1 to 18.

s

Use the <s> (side) parameter value to indicate the CP or packlet location in the physical shelf - front (f) or rear (r).

p

Use the <p> (position) parameter value to indicate the packlet location in an input/output processor (IOP) - upper (u) or lower (l).

Shelf

Use the <shelf> parameter to instruct the XA-Core system to retrieve information about all the components installed in the shelf. The <shelf> parameter retrieves the information you would obtain by entering the Query card command for every circuit pack and packlet in the XA-Core.

Subsystem_name

Use the <subsystem_name> parameter to indicate the name of a subsystem. The value of the subsystem name is either SM, PE, or IO. Use the <subsystem_name> parameter only with the <type> parameter.

Type

Use the <type> parameter to indicate that the query applies to a subsystem of type SM, PE, or IO. Use the <type> parameter with the <subsystem name> parameter. The MAP terminal displays the location of all CPs that match the subsystem type. Do not enter shelf location parameters.

RTIF MAP level (continued)

Options

There are no command options.

Command format examples

Example use of the Query_ command is shown in Table "Query_ command examples". The Query_ command syntax is shown in the example below:

COMMAND <parameter>

Query_ command examples

Command example	Command description
>QUERY card 4 r	QUERY <card> <nn> <s>: Display the PEC, serial number, insertion/activation dates software load, firmware version and working state for the CP.
>QUERY card 7 r u	QUERY <card> <nn> <s> <p>: Display the PEC, serial number, insertion/ activation dates, software load, firmware version and working state for the packlet.
>QUERY shelf	QUERY <shelf>: Display the PEC, serial number, insertion/activation dates, software load, firmware version, and working state for every CP and packlet in the shelf.
>QUERY type io	QUERY <type> <subsystem_name>: Display subsystem name and location of all CPs and packlets that match the subsystem type.

Quit

The Quit command is a common command. The Quit command instructs the XA-Core system to exit from the current MAP session. You can exit to any MAP level that is higher in the MAP level hierarchy.

Note: The XA-Core system continues to execute any previous commands entered.

Menu selection number

0

Type

Navigational

Parameters

The Quit command parameters are optional.

All

Use the <all> parameter to terminate all XA-Core MAP sessions and display the CI prompt.

Incrname

Use the <incrname> parameter to end the current MAP session and display a MAP level higher in the MAP system hierarchy. Enter a MAP level name. The XA-Core system displays the MAP level that is one level higher in the MAP system hierarchy than the <incrname> (increment name) value.

Nlevel

Use the <nlevel> parameter to end the current MAP session and display a MAP level higher in the MAP system hierarchy. Enter a number value to represent the number of DMS MAP levels to step-back in the MAP system hierarchy.

Options

There are no command options.

Command format examples

Example use of the Quit command is shown in Table "Quit command examples". The Quit command syntax is shown in the example below:

COMMAND <parameter>

Quit command examples (Sheet 1 of 2)

Command example	Command description
>QUIT	Use the Quit command with no parameters to exit from the current MAP session. Display a MAP level that is one level above the current MAP session level.
>QUIT mtc	QUIT <incrname>: Exit the current MAP session. Display the MAP level that is one level above the indicated MAP level name.

RTIF MAP level (continued)

Quit command examples (Sheet 2 of 2)

Command example	Command description
>QUIT 2	QUIT <nlevel>: Exit the current MAP session. Display the MAP level that is two levels above the current MAP session in the MAP hierarchy.
>QUIT all	QUIT <all>: Exit from all MAP sessions and display the CI prompt.

RTS_

The RTS_ command instructs the XA-Core system to test and return a ManB or CBsy packlet or port to service.

- If the RTIF links are supported by an RTIF packlet, the command can instruct the XA-Core system to test and return to service one of the following: the RTIF packlet, port0, or port1.
- If the RTIF links are supported by the RTIF section of an HCMIC circuit pack, the command can instruct the XA-Core system to test and return to service one of the following: port0, port1, link0, or link1.

Menu selection number

8

Type

Operational

Parameters

The RTS_ command requires parameters. If you do not enter any parameters or you enter invalid parameters, the MAP terminal displays an error message. The MAP terminal prompts you to enter a correct parameter value.

The RTS_ command requires the following parameters.

nn

Use the <nn> (slot number) parameter value to indicate the number of the physical shelf slot - 1 to 18.

s

Use the <s> (side) parameter value to indicate the packlet location in the physical shelf - front (f) or rear (r).

p

If you want to return to service an RTIF packlet, or an RTIF link that is supported by a packlet, use the <p> (position) parameter value to indicate the packlet location in an input/output processor (IOP) - upper (u) or lower (l).

device

Use the optional <device> parameter value to indicate that the command applies to a device. If the RTIF links are supported by an RTIF packlet, use the <device> parameter to identify the local port (port0) or the remote port (port1). If the RTIF links are supported by the RTIF section of an HCMIC circuit pack, use the <device> parameter to identify the local port (port0) or the remote port (port1) or the local link (link0) or the remote link (link1).

Options

You can enter the following options in the command statement.

Nowait

Use the [nowait] option with the RTS_ command. Display the MAP prompt to allow you to enter other commands while the system returns the RTIF or device to service.

Command format examples

Example use of the RTS command is shown in Table "RTS command examples". The RTS command syntax is shown in the example below:

COMMAND <parameter> [option]

RTS command examples (Sheet 1 of 2)

Command example	Command description
>RTS 4 r u	RTS <nn> <s> <p>: Test and return the RTIF packlet to service.
>RTS 4 r u nowait	RTS <nn> <s> <p> [nowait]: Test and return the RTIF packlet to service. Display the MAP prompt and enter other commands.
>RTS 4 r u port0	RTS <nn> <s> <p> <device>: Test and return to service the local port on an RTIF packlet.
>RTS 15 r port1	RTS <nn> <s> <device>: Test and return to service the remote port on the RTIF section of an HCMIC circuit pack.

RTIF MAP level (continued)

RTS command examples (Sheet 2 of 2)

Command example	Command description
>RTS 4 r u port0 nowait	RTS <nn> <s> <p> [nowait]: Test and return to service the local port on an RTIF packlet. Display the MAP prompt and enter other commands.

SM

The SM command is a non-menu command. The SM command instructs the XA-Core system to display the shared memory (SM) MAP level.

Menu selection number

The RTIF MAP does not display an SM menu number.

Type

Navigational

Parameters

There are no command parameters.

Options

There are no command options.

Command format examples

Example use of the SM command is shown in Table "SM command example". The SM command syntax is shown in the example below:

COMMAND

SM command example

Command example	Command description
>SM	Exit from the current MAP session and display the SM MAP level.

Tape

The Tape command is a non-menu command. The Tape command instructs the system to display the XA-Core Tape MAP.

Menu selection number

The RTIF MAP does not display a Tape menu number.

Type

Navigational

Parameters

There are no command parameters.

Options

There are no command options.

Command format examples

Example use of the Tape command is shown in Table "Tape command example". The Tape command syntax is shown in the example below:

COMMAND

Tape command example

Command example	Command description
>TAPE	Exit from current MAP session and display the Tape MAP level

Tst_

The Tst_ command can do the following things:

- If the RTIF links are supported by an RTIF packlet, the command can
  - — instruct the XA-Core system to perform tests on the RTIF packlet
  - — instruct the XA-Core system to perform tests on any one of the following devices on the packlet: port0 or port1.
- If the RTIF links are supported by the RTIF section of an HCMIC circuit pack, the command can instruct the XA-Core system to perform tests on any one of the following devices on that section of the circuit pack: port0, port1, link0, or link1.

The type of test depends on the working state (in-service or out-of-service) of the RTIF packlet or device.

An in-service test performs non-destructive tests. An out-of-service test performs non-destructive and destructive tests.

Menu selection number

6

RTIF MAP level (continued)

Type

Operational

Parameters

The Tst_ command requires command parameters. If you do not enter any parameters or you enter invalid parameters, the MAP terminal displays an error message. The MAP terminal prompts you to enter a correct parameter value.

The Tst_ command requires the following command parameters.

nn

Use the <nn> (slot number) parameter value to indicate the number of the physical shelf slot - 1 to 18.

s

Use the <s> (side) parameter value to indicate the packlet location in the physical shelf - front (f) or rear (r).

p

If you want to test an RTIF packlet or a device on a packlet, use the <p> (position) parameter value to indicate the packlet location in an input/output processor (IOP) - upper (u) or lower (l).

device

If you want to test a device, use the <device> parameter value to identify it, as follows:

- If the RTIF links are supported by an RTIF packlet, you can name any one of the following devices on the packlet: port0 (the local port) or port1 (the remote port).
- If the RTIF links are supported by the RTIF section of an HCMIC circuit pack, you can name any one of the following RTIF devices on that section of the circuit pack: port0 (the local port), port1 (the remote port), link0 (the local link), or link1 (the remote link).

Options

You can use the following command option in the command statement.

Nowait

Use the [nowait] option with the RTS_ command. Display the MAP prompt to allow you to enter other commands while the system performs the tests.

Command format examples

Example use of the Tst_ command is shown in Table "Tst_ command examples". The Tst_ command syntax is shown in the example below:

COMMAND <parameter> [option]

Tst_ command examples

Command example	Command description
>TST 4 r u	TST <nn> <s> <p>: Perform a test on the indicated RTIF packlet.
>TST 4 r u nowait	TST <nn> <s> <p> [nowait]: Perform a test on the indicated RTIF packlet. Display the MAP prompt and continue with other MAP tasks.
>TST 4 r u port0	TST <nn> <s> <p> <device>: Perform a test on the local RTIF port device.
>TST 15 r link1	TST <nn> <s> <device>: Perform a test on the remote link supported by the RTIF section of an HCMIC circuit pack..
>TST 4 r u port1 nowait	TST <nn> <s> <p> <device> [nowait]: Perform test on the remote RTIF port device. Display the MAP prompt and continue with other MAP tasks

Uneq_

Use the uneq_ command to remove an RTIF packlet from the inventory, or to unequip an RTIF link supported by the RTIF section of an HCMIC circuit pack.

Menu selection number

12

Type

Operational

Limitations and restrictions

If applied to an RTIF packlet, the command will only execute on a ManB slot. If the slot is not ManB, the command will fail. Before applying the command to a packlet, remove the packlet from the slot.

RTIF MAP level (continued)

Parameters

The uneq_ command requires command parameters. If you do not enter any parameters or you enter invalid parameters, the MAP terminal displays an error message. The MAP terminal prompts you to enter a correct parameter value.

nn

Use the <nn> (slot number) parameter value to indicate the number of the physical shelf slot - 1 to 18 for the front plane, 4 to 15 for the rear plane.

s

Use the <s> (side) parameter value to indicate the CP or packlet location in the physical shelf - front (f) or rear (r).

p

If you are removing an RTIF packlet from the inventory, use the <p> (position) parameter to indicate the packlet location, upper (u) or lower (l).

device

If you are unequipping an RTIF link supported by the RTIF section of an HCMIC circuit pack, use the <device> parameter to indicate the link: link0 (local link) or link1 (remote link).

> ***Note:*** You can unequip an RTIF link supported by an HCMIC circuit pack, but you cannot unequip an RTIF link supported by an RTIF packlet.

Options

There are no command options.

Command format examples

Example use of the uneq_ command is shown in Table "Uneq_ command example". The uneq_ command syntax is shown in the example below:

COMMAND <parameter>

Uneq_ command example

Command example	Command description
>UNEQ 4 r u	UNEQ <nn> <s> <p>: Unequip the RTIF packlet at slot 4, rear, upper.
>UNEQ 4 r link0	UNEQ <nn> <s> <device>: Unequip an RTIF link supported by the HCMIC circuit pack in slot 4, rear. (Link0 is the local RTIF link; link1 is the remote link.)

XACMtc

The XACMtc command is a non-menu command. The XACMtc command instructs the XA-Core system to display the XA-Core maintenance (XACMtc) MAP level.

Menu selection number

The RTIF MAP level does not display an XACMtc menu number.

Type

Navigational

Parameters

There are no command parameters.

Options

There are no command options.

Command format examples

Example use of the XACMtc command is shown in Table "XACMtc command example". The XACMtc command syntax is shown in the example below:

COMMAND

XACMtc command example

Command example	Command description
>XACMTC	Exit from the current MAP session and display the XACMtc MAP level.

This page is left blank intentionally.

Disk MAP level

Introduction

Use the XA-Core Disk MAP level to perform maintenance actions on the XA-Core IO disk packlets. Select the Disk option from the XA-Core (XAC) MAP to display the XA-Core Disk MAP.

Disk MAP level

The Disk MAP level is an interface that allows you to monitor and perform disk packlet maintenance activities. The command interpreter output area displays the disk packlet locations and working states.

Disk MAP level

```
 XAC      MS      IOD     Net      PM      CCS     Lns     Trks     Ext     APPL
  .        .       .       .       .       .       .       .       .       .


Disk                 Front:   111111111  Rear: 111111   SM     PE      IO     PKLT
 0 Quit              123456789012345678  456789012345   .      .       .      .
 2                Sta: -.-.--..-..-----..-  .--.-------.   0      0       0      0
 3                Dep:
 4                Typ:  *              *
 5                Slot: Side:     Packlet:  Status:
 6 Tst_            2    Front    Lower     .
 7 Bsy_            17   Front    Lower     .
 8 RTS_
 9
10
11 Format_         DISK:
12 Uneq_
13
14 Alarm_
15 Cntrs_
16
17 Indicat_
18 Query_

 XMAP0
Time  14:12   >
```

Disk Menu Commands

Menu commands appear on the MAP command menu. Non-menu commands do not appear on the MAP menu list. Enter both menu and non-menu commands in the command interpreter input area.

Disk MAP level (continued)

Table "Summary of Disk MAP commands" contains a summary description of Disk MAP level commands.

Summary of Disk MAP commands

Command	Menu #	Type	Function
Alarm_	14	Op/Info	Enable, disable or query alarm notifications
AMDI	Non-menu	Nav	Display the AMDI MAP level
Bsy_	7	Op	Place the disk packlet in a ManB state
CMIC	Non-menu	Nav	Display the CMIC MAP level
Cntrs_	15	Info	Display the non-zero system-busy (SysB) transition counters, or reset the SysB transition counters for a specified component
ETHR	Non-menu	Nav	Display the ETHR MAP level
Format_	11	Op	Clear the disk contents & format a physical disk
Indicat_	17	Info	Cause a CP or packlet LED to wink or clear
IO	Non-menu	Nav	Display the IO MAP level
PE	Non-menu	Nav	Display the PE MAP level
Query_	18	Info	List information for any CP or packlet
Quit	0	Nav	Exit from the current MAP level
RTIF	Non-menu	Nav	Display the RTIF MAP level
RTS_	8	Op	Test and return a disk packlet to service
SM	Non-menu	Nav	Display the SM MAP level
Tape	Non-menu	Nav	Display the IO TAPE MAP level
Tst_	6	Op	Perform a test on a disk packlet
Uneq_	12	Op	Unequip a disk packlet
XACMtc	Non-menu	Nav	Display the XACMtc MAP level

Alarm_

The Alarm_ command is a common menu command. The Alarm_ command allows you to perform the following tasks:

- permit notification for selected alarms
- disable notification for selected alarms
- query the XA-Core system to identify alarm conditions or examine the status of alarms

Menu selection number

14

Type

Operational or Informational

Parameters

The Alarm_ command requires command parameters. If you do not enter any parameters or you enter invalid parameters, the MAP terminal prompts you to enter a correct parameter value. The Alarm_ command requires at least one of the following command parameters.

Alarm_name

Use the <alarm_name> parameter to indicate the name of the XA-Core system alarm. You can use the <alarm_name> parameter with the <disable> and <enable> parameters.

All

Use the <all> parameter to enable or disable notification for all alarms (use with the <enable> or <disable> parameter.

Disable

Use the <disable> parameter to prevent the XA-Core system from displaying alarm notification messages on the MAP screen. You can disable either one alarm at a time or all alarms. Use the <disable> parameter with the Alarm_ command and <alarm_name> parameter to disable a single alarm. Use the <disable> parameter with the <all> parameter to disable all XA-Core alarms. The <disable> parameter remains active until you enable the alarm or the system performs a restart.

Enable

Use the <enable> parameter to instruct the XA-Core system to display an alarm notification message on the MAP terminal. You can enable either one alarm or all alarms. Use the <enable> parameter together with the Alarm_

Disk MAP level (continued)

command and <alarm_name> parameter to enable a single alarm. Use the <enable> parameter with the <all> parameter to enable all XA-Core alarms.

Raised

Use the <raised> parameter to display all active alarms, the alarm severity and enabled/disabled status. You can use the <raised> parameter with the [enabled] or [disabled] options. If you do not enter any options, the XA-Core system MAP displays all active, enabled and disabled alarms.

Options

You can enter one of the following command options in the command statement.

Disabled

Use the [disabled] option with the <raised> parameter. The option instructs the XA-Core system to display all active alarms that have a disabled status.

Enabled

Use the [enabled] option with the <raised> parameter. The option instructs the XA-Core system to display all active alarms that have an enabled status.

Command format examples

Example use of the Alarm_ command is shown in Table "Alarm_ command examples". The Alarm_ command syntax is shown in the example below:

COMMAND <parameter> [option]

Alarm_ command examples (Sheet 1 of 2)

Command example	Command description
>ALARM tape	ALARM <alarm_name>: Display the alarm severity and status for a single alarm.
>ALARM all	ALARM <all>: Display the alarm severity and status for all alarms.
>ALARM all disable	ALARM <all> <disable>: Disable notification for all alarms.
>ALARM tape disable	ALARM <alarm_name> <disable>: Disable notification for a single alarm.
>ALARM all enable	ALARM <all> <enable>: Enable notification for all alarms.

Alarm_ command examples (Sheet 2 of 2)

Command example	Command description
>ALARM tape enable	ALARM <alarm_name> <enable>: Enable notification for a single alarm.
>ALARM raised	ALARM <raised>: Display all active alarms
>ALARM raised enabled	ALARM <raised> [enabled]: Display active alarms that have an enabled status
>ALARM raised disabled	ALARM <raised> [disabled]: Display active alarms that have an disabled status

AMDI

The AMDI command is a non-menu command. The AMDI command instructs the XA-Core system to display the AMDI MAP level.

Menu selection number

The Disk MAP level does not display an AMDI menu number.

Type

Navigational

Parameters

There are no command parameters.

Options

There are no command options.

Command format examples

Example use of the AMDI command is shown in Table "AMDI command examples". The AMDI command syntax is shown in the example below:

COMMAND

AMDI command examples

Command example	Command description
>AMDI	Exit from the current MAP session and display the AMDI MAP level.

Disk MAP level (continued)

Bsy_

The Bsy_ command places an InSv disk packlet in a ManB state.

Menu selection number

7

Type

Operational

Parameters

The Bsy_ command requires command parameters. If you do not enter any parameters or you enter invalid parameters, the MAP terminal displays an error message. The MAP terminal prompts you to enter a correct parameter value. The Bsy_ command requires the following command parameters.

nn

Use the <nn> (slot number) parameter value to indicate the number of the physical shelf slot - 1 to 18.

s

Use the <s> (side) parameter value to indicate the packlet location in the physical shelf - front (f) or rear (r).

p

Use the <p> (position) parameter value to indicate the packlet location in an input/output processor (IOP) - upper (u) or lower (l).

Options

You can enter one of the following options in the Bsy_ command statement.

Force

The [force] option instructs the system to bypass redundancy checks and continue to execute the command.

When you use the [force] option in this MAP level, the system displays a message warning that the command will take the packlet out of service, and asking you to confirm the command.

If you confirm the command, the system may display another warning message and ask you to re-confirm the command. The system does this if some of the IO components in the system are unstable. The warning message identifies the unstable IO components, and tells you that executing the command might jeopardize the system further.

Use the [force] option with caution. The disk can be performing a read/write transaction and the forced Bsy_ command can cause loss of information.

Noprompt

Use the [noprompt] option to bypass system prompts and continue to execute the command. Use the [noprompt] option with caution. System messages and prompts help you to prevent loss of information.

Command format examples

Example use of the Bsy_ command is shown in Table "Bsy_ command examples". The Bsy_ command syntax is shown in the example below:

COMMAND <parameter> [option]

Bsy_ command examples

Command use	Command description
>BSY 2 f l	BSY <nn> <s> <p>: Place the disk packlet in a ManB state.
>BSY 2 f l force	BSY <nn> <s> <p> [force]: Place the disk packlet in a ManB state. Ignore reduced redundancy conditions.
>BSY 2 f l noprompt	BSY <nn> <s> [noprompt]: Place the disk packlet in a ManB state. Block warning/prompt messages.
>BSY 2 f l force noprompt	BSY <nn> <s> [force] [noprompt]: Place the disk packlet in a ManB state. Ignore possible error conditions. Block warning/prompt messages.

CMIC

The CMIC command is a non-menu command. The CMIC command instructs the XA-Core system to display the CMIC MAP level.

Menu selection number

The Disk MAP level does not display a CMIC menu number.

Type

Navigational

Parameters

There are no command parameters.

Disk MAP level (continued)

Options

There are no command options.

Command format examples

Example use of the CMIC command is shown in Table "CMIC command examples". The CMIC command syntax is shown in the example below:

COMMAND

CMIC command examples

Command example	Command description
>CMIC	Exit from the current MAP session and display the CMIC MAP level.

Cntrs_

The Cntrs_ command instructs the XA-Core system to either display the current values of all non-zero system-busy (SysB) transition counters, or to reset to zero the SysB transition counters for a specified component. A SysB transition counter counts the number of times that a component's state changes from in-service to system-busy.

The system maintains separate SysB transition counters for each instance of each of the following components:

- IOP, HIOP, and HCMIC circuit packs
- all packlets: disk, tape, CMIC, RTIF, Ethernet, and AMDI
- sections of HIOP circuit packs that are supporting ETHR and AMDI connections
- sections of HCMIC circuit packs that are supporting CMIC, RTIF, and ETHR connections
- time-of-day (TOD) devices
- ports

For each component, the system counts the SysB transitions that occur during the current six-hour interval. It also remembers the totals from the seven preceding six-hour intervals. It sums the totals from the seven preceding intervals and the current interval, to obtain the total number of SysB transitions occurring during a 42-to-48-hour period.

The monitored components are divided into groups and for each group there are minor and major threshold values. The minor and major thresholds are for

a 42-to-48-hour period. If a component's total number of SysB transitions for the 42-to-48-hour period equals or exceeds the minor threshold for its component group, and if a SysBTh minor or major alarm is not already in effect, the system raises a SysBTh minor alarm (unless the alarm has been disabled). If a component's total number of SysB transitions for the 42-to-48-hour period equals or exceeds the major threshold for its component group, and if a SysBTh major alarm is not already in effect, the system raises a SysBTh major alarm (unless the alarm has been disabled). For information on the component groups, see the description of the "Query" parameter, below. For information on the SysBTh minor and major alarms and for information on disabling alarms, see the *XA-Core Maintenance Manual*, 297-8991-510.

Menu selection number

15

Type

Informational

Parameters

The Cntrs_ command requires either the <query> parameter or the <reset> parameter.

If you use the <query> parameter, no other parameters are permitted.

If you use the <reset> parameter, you must use additional parameters to specify a component: The <nn> and <s> parameters are required in all CNTRS RESET commands. The <p> parameter is required in some CNTRS RESET commands. The <device> parameter is required in some CNTRS RESET commands.

Query

The <query> parameter instructs the XA-Core system to display the following information.

- Either the value of all system-busy (SysB) transition counters that are greater than zero, or the message: `No SysB transitions on any components in the last 42-48 hrs.` A SysB transition counter counts the number of times that a component goes from the in-service state to the SysB state. For a list of the components for which the system maintains SysB transition counters, see the beginning of this "Cntrs_" section. The system maintains a separate SysB transition counter for each instance of each listed component, for example, for each TOD device. For each component, the system counts the SysB transitions that occur during the current six-hour interval. It also maintains a record of the totals from the seven preceding six-hour intervals. It sums the totals from the seven

Disk MAP level (continued)

preceding intervals and the current interval, to obtain the total number of SysB transitions occurring during a 42-to-48-hour period.

- The values of the minor and major thresholds for each component group. (Component groups are described below.) The thresholds are shown in an output line that resembles the following:

  SysBTh thresholds: (Min/Maj): PE=2/6; SM=2/4; IOhw=2/6; IOlk=2/8

  > ***Note:*** The threshold values shown in the example are for illustrative purposes only. If the values shown in the example differ from the output of the CNTRS QUERY command, you should regard the command output as correct.

  For each component group, a slash separates the minor and major threshold values. For example, “SM=2/4” means that the minor threshold for the SM group is 2, and the major threshold is 4.

  The minor and major thresholds are for a 42-to-48-hour period. If a component’s total number of SysB transitions for the 42-to-48-hour period equals or exceeds the minor threshold for that group, and if a SysBTh minor or major alarm is not already in effect, the system raises a SysBTh minor alarm (unless the alarm has been disabled). If a component’s total number of SysB transitions for the 42-to-48-hour period equals or exceeds the major threshold for that group, and if a SysBTh major alarm is not already in effect, the system raises a SysBTh major alarm (unless the alarm has been disabled). For information on the SysBTh minor and major alarms and for information on disabling alarms, see the *XA-Core Maintenance Manual*, 297-8991-510.

  The component groups are as follows.

  — The PE group includes PE circuit packs.

  — The SM group includes SM circuit packs.

  — The IO link (IOlk) group includes IO links.

  — The IO hardware (IOhw) group includes IOP, HIOP, and HCMIC circuit packs, all packlets, sections of HIOP circuit packs that are supporting ETHR and AMDI connections, sections of HCMIC circuit packs that are supporting RTIF, ETHR, and CMIC connections, time-of-day (TOD) devices, and ports.

Reset

The <reset> parameter instructs the system to reset to zero the value of the system-busy (SysB) transition counters for a specific component. The parameters following the <reset> parameter specify the component.

Use the <reset> parameter with the <nn> and <s> shelf location parameters for a circuit pack or with the <nn>, <s>, and <p> shelf location parameters for a packlet. With the <reset> parameter, use the <device> parameter to identify a port or a link or a time-of-day device (TOD).

Note 1: Ordinarily, you should use the <reset> parameter only for links. Use it after you have corrected a link fault, to reset the SysB transition counters for the link.

Note 2: Ordinarily, for all components other than links, you should let the system reset the counters automatically. The system resets a component's counters automatically when you replace the component. Alternatively, if the SysB transitions stop occurring, the counters will revert to zero after seven six-hour intervals. At the beginning of each six-hour interval, the system starts a six-hour transition counter at zero and it adjusts the 42-to-48-hour total to reflect the seven preceding six-hour intervals. If the component goes through seven consecutive six-hour intervals without a SysB transition, all the counters revert to zero.

nn

Use the <nn> (slot number) parameter value to indicate the number of the physical shelf slot where a CP or packlet is located - 1 to 18. The component could be the CP or packlet, or it could be a device on the CP or packlet. The <nn> parameter is required in all cases.

s

Use the <s> (side) parameter value to indicate the location in the physical shelf of a CP or packlet - front (f) or rear (r). The component could be the CP or packlet, or it could be a device on the CP or packlet. The <s> parameter is required in all cases.

p

Use the <p> (position) parameter value to indicate the packlet location in an input/output processor (IOP) - upper (u) or lower (l). The <p> parameter is required if the component is a packlet or a device on a packlet.

Device

Use the <device> parameter if the component is a link, a port, or a TOD device.

Options

There are no command options.

Command format examples

Example use of the Cntrs_ command is shown in Table "Cntrs_ command examples". The Cntrs_ command syntax is shown in the example below.

Disk MAP level (continued)

COMMAND <parameter>

Cntrs_ command examples

Command example	Command description
>Cntrs query	CNTRS QUERY: Display the values of all non-zero SysB transition counters, and display the minor and major threshold values.
>Cntrs reset 14 r	CNTRS RESET <nn> <s>: Reset the SysB transition counter for the circuit pack in slot 14R (an IOP or HIOP circuit pack).
>Cntrs reset 15 r u	CNTRS RESET <nn> <s> <p>: Reset the SysB transition counter for the packlet in slot 15R, upper (a CMIC packlet).
>Cntrs reset 6 r u link	CNTRS RESET <nn> <s> <p> <device>: Reset the SysB transition counter for the link on the ethernet packlet in slot 6R, upper.
>Cntrs reset 4 r l port0	CNTRS RESET <nn> <s> <p> <device>: Reset the SysB transition counter for port0 (the local port) on the RTIF packlet in slot 4R, lower.
>Cntrs reset 13 r l link0	CNTRS RESET <nn> <s> <p> <device>: Reset the SysB transition counter for link0 on the AMDI packlet in slot 13R, lower.
>Cntrs reset 14 r link1	CNTRS RESET <nn> <s> <device>: Reset the SysB transition counter for link1 on the AMDI section of the HIOP circuit pack in slot 14R.
>Cntrs reset 15 r tod0	CNTRS RESET <nn> <s> <device>: Reset the SysB transition counter for the tod0 time-of-day device on the CMIC section of the HCMIC circuit pack in slot 15R.

ETHR

The ETHR command is a non-menu command. The ETHR command instructs the XA-Core system to display the ETHR MAP level.

Menu selection number

The Disk MAP level does not display an ETHR menu number.

Type

Navigational

Parameters

There are no command parameters.

Options

There are no command options.

Command format examples

Example use of the ETHR command is shown in Table "ETHR command examples". The ETHR command syntax is shown in the example below:

COMMAND

ETHR command examples

Command example	Command description
>ETHR	Exit from the current MAP session and display the ETHR MAP level.

Format_

The Format_ command instructs the XA-Core system to perform a physical format and erase the Disk contents. The MAP terminal displays a warning/ prompt message.

Note: You must place a disk packlet in a ManB state before you use the Format_ command. The disk packlet remains in an 00S state until the disk format is complete.

Menu selection number

11

Type

Operational

Parameters

The Format_ command requires parameters. If you do not enter any parameters or you enter invalid parameters, the MAP terminal displays an error message. The MAP terminal prompts you to enter a correct parameter value.

The Format_ command requires the following command parameters.

Disk MAP level (continued)

nn

Use the <nn> (slot number) parameter value to indicate the number of the physical shelf slot - 1 to 18.

s

Use the <s> (side) parameter value to indicate the packlet location in the physical shelf - front (f) or rear (r).

p

Use the <p> (position) parameter value to indicate the packlet location in an input/output processor (IOP) - upper (u) or lower (l).

Options

You can enter one or more of the following options in the command statement.

Force

The [force] option instructs the system to ignore possible loss of information and continue to execute the command. The MAP terminal displays a warning/ prompt message.

Nowait

Use the [nowait] option to execute the Format_ command. Display the MAP prompt to allow you to continue with other work while the system is performing the disk format.

Command format examples

Example use of the Format_ command is shown in Table "Format_ command examples". The Format_ command syntax is shown in the example below:

COMMAND <parameter> [option]

Format_ command examples (Sheet 1 of 2)

Command example	Command description
>FORMAT 2 f l	FORMAT <nn> <s> <p>: Format the disk packlet.
>FORMAT 2 f l force	FORMAT <nn> <s> <p> [force]: Format the disk packlet. Ignore possible error conditions.
>FORMAT 2 f l nowait	FORMAT <nn> <s> <p> [nowait]: Format the disk packlet. Display the MAP prompt and enter other MAP level commands.

Format_ command examples (Sheet 2 of 2)

Command example	Command description
>FORMAT 2 f l force nowait	FORMAT <nn> <s> <p> [force] [nowait]: Format the disk packlet. Ignore possible error conditions. Display the MAP prompt and enter other MAP level commands.

Indicat_

The Indicat_ command is a common command. The command causes LEDs on CPs or packlets to wink or illuminate. The command allows you to locate a device on the physical shelf or to make sure all LEDs work. CPs and packlets must be in a ManB state before you use the Indicat_ card command.

Note: If you use the Indicat_ command with the <test> or <testall> parameters, CPs and packlets do not have to be in a ManB state.

Menu selection number

17

Type

Informational

Parameters

The Indicat_ command requires parameters. If you do not enter any parameters or you enter invalid parameters, the MAP terminal displays an error message. The MAP terminal prompts you to enter a correct parameter value.

The Indicat_ command requires at least two of the shelf location parameters. In addition to the shelf location parameters, you can enter one of the following parameters.

Card

Use the <card> parameter to cause the red triangular LED of a SysB (system busy) or ManB CP or packlet to wink. You can use the [timer] option with the <card> parameter.

Clear

Use the <clear> parameter to return LEDs to a normal working state on a single winking or testing CP or packlet. Use the <clear> parameter with the shelf location parameters.

Disk MAP level (continued)

Clearall

Use the <clearall> parameter to return all winking or testing LEDs on all CPs or packlets to a normal working state.

Test

Use the <test> parameter to light the red LED on a single CP or packlet. The CP or packlet does not have to be in a ManB state. LEDs already winking on other CPs or packlets continue to wink. Use the <test> parameter with the shelf location parameters. You can use the <test> parameter with the [timer] option.

Testall

Use the <testall> parameter to light all LEDs on all CPs and packlets. The CPs and packlets do not have to be in a ManB state. LEDs already winking on other CPs or packlets continue to wink. You can use the <testall> parameter with the [timer] option. Do not use the shelf location parameters with the <testall> parameter.

nn

Use the <nn> (slot number) parameter value to indicate the number of the physical shelf slot - 1 to 18.

s

Use the <s> (side) parameter value to indicate the CP or packlet location in the physical shelf - front (f) or rear (r).

p

Use the <p> (position) parameter value to indicate the packlet location in an input/output processor (IOP) - upper (u) or lower (l).

Options

You can enter the following option in the command statement.

Timer

Use the [timer] option to indicate the time (in minutes) to light or wink LEDs. The XA-Core system turns the LEDs off when the time expires. The minimum time period is 1 min. The maximum time period is 999 min. If you do not define a time period, the default time period is 120 min.

Use the [timer] option as follows:

- use the [timer] option with the <card> parameter to wink a red LED on a single CP or packlet for a period of time.
- use the [timer] option with the <test> parameter to light the red LED on a CP or packlet for a period of time.
- use the [timer] option with the <testall> parameter to light the red LED on all CPs and packlets for a period of time.

Command format examples

Example use of the Indicat_ command is shown in Table "Indicat_ command examples". The Indicat_ command syntax is shown in the example below:

COMMAND <parameter> [option]

Indicat_ command examples (Sheet 1 of 2)

Command example	Command description
>INDICAT card 4 r u	INDICAT <card> <nn> <s> <p>: Wink red LED on a single ManB packlet.
>INDICAT card 4 r u 5	INDICAT <card> <nn> <s> <p> [timer]: Wink red LED on a single ManB packlet for 5 min.
>INDICAT clear 4 r u	INDICAT <clear> <nn> <s> <p>: Return LEDs on a single packlet to a normal working state.
>INDICAT clearall	INDICAT <clearall>: Return all LEDs on all CPs and packlets to a normal working state.
>INDICAT test 4 r 5	INDICAT <test> <nn> <s> [timer]: Light all LEDs on a single CP for 5 min. If the command does not include the [timer] option, the XA-Core default time value is 120 min.
>INDICAT testall 5	INDICAT <testall> [timer]: Light all LEDs on all CPs and packlets for 5 min. The amber LEDs on the shelf interface modules (SIM) CPs do not light. The <test> parameter does not cause an audible alarm nor alarm notification on the MAP terminal. CPs or packlets now under test continue to wink

Disk MAP level (continued)

Indicat_ command examples (Sheet 2 of 2)

Command example	Command description
>INDICAT testall	INDICAT <testall>: Light all LEDs on all CPs and packlets for 120 min.

IO

The IO command is a non-menu command. The IO command instructs the XA-Core system to display the IO MAP level.

Menu selection number

The Disk MAP level does not display an IO menu number.

Type

Navigational

Parameters

There are no command parameters.

Options

There are no command options.

Command format examples

Example use of the IO command is shown in Table "IO command example". The IO command syntax is shown in the example below:

COMMAND

IO command example

Command example	Command description
>IO	Exit from the current MAP session and display the IO MAP level.

PE

The PE command is a non-menu command. The PE command instructs the XA-Core system to display the XA-Core processor element (PE) MAP level.

Menu selection number

The Disk MAP level does not display a PE menu number.

Type

Navigational

Parameters

There are no command parameters.

Options

There are no command options.

Command format examples

Example use of the PE command is shown in Table "PE command example". The PE command syntax is shown in the example below:

COMMAND

PE command example

Command example	Command description
>PE	Exit from the current MAP session and display the PE MAP level.

Query_

The Query_ command is a common command. The Query_ command causes the MAP terminal to display the following information for a single CP or packlet:

- the product engineering code (PEC)
- the hardware release
- the baseline hardware release (as specified in table PECINV)
- whether the hardware is compatible with the baseline and exception specifications (specifications found in table PECINV)
- the serial number

The parameters determine the type of information displayed.

Menu selection number

18

Type

Informational

Disk MAP level (continued)

Parameters

The Query_ command requires command parameters. If you do not enter any parameters or you enter invalid parameters, the MAP terminal displays an error message. The MAP terminal prompts you to enter a correct parameter value.

If you use the Query_ command with the <card> parameter, enter the shelf location parameters. If you use the Query_ command with the <type> parameter or with the <shelf> parameter, do not enter the shelf location parameters.

Card

Use the <card> parameter to instruct the XA-Core system to perform a query on a CP or packlet. Display the description to the MAP terminal. You must use the <card> parameter with the CP or packlet shelf location parameters.

nn

Use the <nn> (slot number) parameter value to indicate the number of the physical shelf slot - 1 to 18.

s

Use the <s> (side) parameter value to indicate the CP or packlet location in the physical shelf - front (f) or rear (r).

p

Use the <p> (position) parameter value to indicate the packlet location in an input/output processor (IOP) - upper (u) or lower (l).

Shelf

Use the <shelf> parameter to instruct the XA-Core system to retrieve information about all the components installed in the shelf. The <shelf> parameter retrieves the information you would obtain by entering the Query card command for every circuit pack and packlet in the XA-Core.

Subsystem_name

Use the <subsystem_name> parameter to indicate the name of a subsystem. The value of the subsystem name is either SM, PE, or IO. Use the <subsystem_name> parameter only with the <type> parameter.

Type

Use the <type> parameter to indicate that the query applies to a subsystem of type SM, PE, or IO. Use the <type> parameter with the <subsystem name> parameter. The MAP terminal displays the location of all CPs that match the subsystem type. Do not enter shelf location parameters.

Options

There are no command options.

Command format examples

Example use of the Query_ command is shown in Table "Query_ command examples". The Query_ command syntax is shown in the example below:

COMMAND <parameter>

Query_ command examples

Command example	Command description
>QUERY card 4 r	QUERY <card> <nn> <s>: Display the PEC, serial number, insertion/activation dates software load, firmware version and working state for the CP.
>QUERY card 7 r u	QUERY <card> <nn> <s> <p>: Display the PEC, serial number, insertion/ activation dates, software load, firmware version and working state for the packlet.
>QUERY shelf	QUERY <shelf>: Display the PEC, serial number, insertion/activation dates, software load, firmware version, and working state for every CP and packlet in the shelf.
>QUERY type io	QUERY <type> <subsystem_name>: Display subsystem name and location of all CPs and packlets that match the subsystem type.

Quit

The Quit command is a common command. The Quit command instructs the XA-Core system to exit from the current MAP session. You can exit to any MAP level that is higher in the MAP level hierarchy.

Note: The XA-Core system continues to execute any previous commands entered.

Menu selection number

0

Disk MAP level (continued)

Type

Navigational

Parameters

The Quit command parameters are optional.

All

Use the <all> parameter to terminate all XA-Core MAP sessions and display the CI prompt.

Incrname

Use the <incrname> parameter to end the current MAP session and display a MAP level higher in the MAP system hierarchy. Enter a MAP level name. The XA-Core system displays the MAP level that is one level higher in the MAP system hierarchy than the <incrname> (increment name) value.

Nlevel

Use the <nlevel> parameter to end the current MAP session and display a MAP level higher in the MAP system hierarchy. Enter a number value to represent the number of DMS MAP levels to step-back in the MAP system hierarchy.

Options

There are no command options.

Command format examples

Example use of the Quit command is shown in Table "Quit command examples". The Quit command syntax is shown in the example below:

COMMAND <parameter>

Quit command examples (Sheet 1 of 2)

Command example	Command description
>QUIT	Use the Quit command with no parameters to exit from the current MAP session. Display a MAP level that is one level above the current MAP session level.
>QUIT mtc	QUIT <incrname>: Exit the current MAP session. Display the MAP level that is one level above the indicated MAP level name.

Quit command examples (Sheet 2 of 2)

Command example	Command description
>QUIT 2	QUIT <nlevel>: Exit the current MAP session. Display the MAP level that is two levels above the current MAP session in the MAP hierarchy.
>QUIT all	QUIT <all>: Exit from all MAP sessions and display the CI prompt.

RTIF

The RTIF command is a non-menu command. The RTIF command instructs the XA-Core system to display the remote terminal interface (RTIF) MAP level.

Menu selection number

The Disk MAP level does not display an RTIF menu number.

Type

Navigational

Parameters

There are no command parameters.

Options

There are no command options.

Command format examples

Example use of the RTIF command is shown in Table "RTIF command example". The RTIF command syntax is shown in the example below:

COMMAND

RTIF command example

Command example	Command description
>RTIF	Exit from the current MAP session and display the RTIF MAP level.

RTS_

The RTS_ command instructs the XA-Core system to test and return a ManB or CBsy disk packlet to service.

Disk MAP level (continued)

Menu selection number

8

Type

Operational

Parameters

The RTS_ command requires parameters. If you do not enter any parameters or you enter invalid parameters, the MAP terminal displays an error message. The MAP terminal prompts you to enter a correct parameter value.

The RTS_ command requires the following parameters.

nn

Use the <nn> (slot number) parameter value to indicate the number of the physical shelf slot - 1 to 18.

s

Use the <s> (side) parameter value to indicate the packlet location in the physical shelf - front (f) or rear (r).

p

Use the <p> (position) parameter value to indicate the packlet location in an input/output processor (IOP) - upper (u) or lower (l).

Options

You can enter the following options in the command statement.

Force

The [force] option instructs the system to ignore possible error conditions and continue to execute the command. The MAP terminal displays a warning/ prompt message.

Nowait

Use the [nowait] option with the RTS_ command. Display the MAP prompt to allow you to enter other commands while the system returns the disk to service.

Command format examples

Example use of the RTS command is shown in Table "RTS command examples". The RTS command syntax is shown in the example below:

COMMAND <parameter> [option]

RTS command examples

Command example	Command description
>RTS 2 f l	RTS <nn> <s> <p>: Test and return the ManB Disk packlet to service.
>RTS 2 f l force	RTS <nn> <s> <p> [force]: Test and force the ManB disk packlet to return to service.
>RTS 2 f l nowait	RTS <nn> <s> <p> [nowait]: Test and return the ManB disk packlet to service. Display the MAP prompt and enter other commands.
>RTS 2 f l force nowait	RTS <nn> <s> <p> [force] [nowait]: Test and force the ManB disk packlet to return to service. Display the MAP prompt and enter other commands.

SM

The SM command is a non-menu command. The SM command instructs the XA-Core system to display the shared memory (SM) MAP level.

Menu selection number

The Disk MAP does not display an SM menu number.

Type

Navigational

Parameters

There are no command parameters.

Options

There are no command options.

Command format examples

Example use of the SM command is shown in Table "SM command example". The SM command syntax is shown in the example below:

Disk MAP level (continued)

COMMAND

SM command example

Command example	Command description
>SM	Exit from the current MAP session and display the SM MAP level.

Tape

The Tape command is a non-menu command. The Tape command instructs the system to display the XA-Core Tape MAP.

Menu selection number

The Disk MAP does not display a Tape menu number.

Type

Navigational

Parameters

There are no command parameters.

Options

There are no command options.

Command format examples

Example use of the Tape command is shown in Table "Tape command example". The Tape command syntax is shown in the example below:

COMMAND

Tape command example

Command example	Command description
>TAPE	Exit from current MAP session and display the Tape MAP level

Tst_

The Tst (Test) command instructs the XA-Core system to perform tests on a disk packlet. The type of test performed depends on the working state (in-service or out-of-service) of the disk packlet.

An in-service test performs non-destructive tests. An out-of-service test performs non-destructive and destructive tests.

Menu selection number

6

Type

Operational

Parameters

The Tst_ command requires command parameters. If you do not enter any parameters or you enter invalid parameters, the MAP terminal displays an error message. The MAP terminal prompts you to enter a correct parameter value.

The Tst_ command requires the following command parameters.

nn

Use the <nn> (slot number) parameter value to indicate the number of the physical shelf slot - 1 to 18.

s

Use the <s> (side) parameter value to indicate the packlet location in the physical shelf - front (f) or rear (r).

p

Use the <p> (position) parameter value to indicate the packlet location in an input/output processor (IOP) - upper (u) or lower (l).

Options

You can use the following command option in the command statement.

Nowait

Use the [nowait] option with the RTS_ command. Display the MAP prompt to allow you to enter other commands while the system performs the tests.

Command format examples

Example use of the Tst_ command is shown in Table "Tst_ command examples". The Tst_ command syntax is shown in the example below:

Disk MAP level (continued)

COMMAND <parameter> [option]

Tst_ command examples

Command example	Command description
>TST 2 f l	TST <nn> <s> <p>: Perform a test on the indicated disk packlet.
>TST 2 f l nowait	TST <nn> <s> <p> [nowait]: Perform a test on the indicated disk packlet. Display the MAP prompt and enter other MAP commands.

Uneq_

Use the uneq_ command to remove a disk packlet from the inventory.

Menu selection number

12

Type

Operational

Limitations and restrictions

If applied to a disk packlet, the command will only execute on a ManB slot. If the slot is not ManB, the command will fail. Before applying the command to a packlet, remove the packlet from the slot.

Parameters

The uneq_ command requires command parameters. If you do not enter any parameters or you enter invalid parameters, the MAP terminal displays an error message. The MAP terminal prompts you to enter a correct parameter value.

nn

Use the <nn> (slot number) parameter value to indicate the number of the physical shelf slot - 1 to 18 for the front plane, 4 to 15 for the rear plane.

s

Use the <s> (side) parameter value to indicate the CP or packlet location in the physical shelf - front (f) or rear (r).

p

Use the <p> (position) parameter to indicate the packlet location, upper (u) or lower (l).

Options

There are no command options.

Command format examples

Example use of the uneq_ command is shown in Table "Uneq_ command example". The uneq_ command syntax is shown in the example below:

COMMAND <parameter>

Uneq_ command example

Command example	Command description
>UNEQ 2 f l	UNEQ <nn> <s> <p>: Unequip a disk packlet

XACMtc

The XACMtc command is a non-menu command. The XACMtc command instructs the XA-Core system to display the XA-Core maintenance (XACMtc) MAP level.

Menu selection number

The Disk MAP level does not display an XACMtc menu number.

Type

Navigational

Parameters

There are no command parameters.

Options

There are no command options.

Command format examples

Example use of the Tst_ command is shown in Table "XACMtc command example". The Tst_ command syntax is shown in the example below:

COMMAND

XACMtc command example

Command example	Command description
>XACMTC	Exit from the current MAP session and display the XACMtc MAP level.

This page is left blank intentionally.

Tape MAP level

Introduction

Use the XA-Core Tape MAP level to perform maintenance actions on the XA-Core tape packlets. Select the Tape option from any XA-Core MAP level to display the XA-Core Tape MAP level.

Tape MAP level layout

The Tape MAP level is an interface that allows you to monitor and perform system maintenance activities. The command interpreter output area displays the Tape packlet shelf location and working state.

Tape MAP level

```
 XAC      MS      IOD      Net      PM      CCS      Lns     Trks     Ext     APPL
  .       .        .        .       .        .        .        .       .        .

Tape                 Front:   111111111  Rear: 111111   SM     PE      IO     PKLT
 0 Quit              123456789012345678  456789012345   .      .       .      .
 2                Sta: -.-.--..-.---.-..-  .-----------.   0      0       0      0
 3                Dep:
 4                Typ:  *              *
 5                Slot:   Side:    Packlet:   Status:    User Name:      Drive:
 6 Tst_              2    Front    Upper      .                          Unmounted
 7 Bsy_             17    Front    Upper      .                          Unmounted
 8 RTS_             TAPE:
 9
10
11
12 Uneq_
13
14 Alarm_
15 Cntrs_
16
17 Indicat_
18 Query_
 XMAP0
Time  14:12   >
```

Tape menu commands

Menu commands appear on the MAP command menu. Non-menu commands do not appear on the MAP command menu. Operating company personnel enter both menu and non-menu commands in the command interpreter input area.

Tape MAP level (continued)

Table "Summary of Tape MAP level commands" contains a summary description of Tape MAP level commands. The table describes the menu number, type and function for each Tape MAP command.

Summary of Tape MAP level commands

Command	Menu number	Type	Function
Alarm_	14	Op/Info	Enable, disable or query alarm notifications
AMDI	Non-menu	Nav	Display the AMDI MAP level
Bsy_	7	Op	Place the tape packlet in ManB state
CMIC	Non-menu	Nav	Display the CMIC MAP level
Cntrs_	15	Info	Display the non-zero system-busy (SysB) transition counters, or reset the SysB transition counters for a specified component
Disk	Non-menu	Nav	Display the Disk MAP level
ETHR	Non-menu	Nav	Display the ETHR MAP level
Indicat_	17	Info	Cause a CP or packlet LED to wink or clear
IO	Non-menu	Nav	Display the IO MAP level
PE	Non-menu	Nav	Display the PE MAP level
Query_	18	Info	List information for any CP or packlet
Quit	0	Nav	Exit from the MAP level now on display and display the XAC MAP level
RTIF	Non-menu	Nav	Display the RTIF MAP level
RTS_	8	Op	Test and return a Tape packlet to service
SM	Non-menu	Nav	Display the SM MAP level
Tst_	6	Op	Perform a test on a Tape packlet
Uneq_	12	Op	Unequip a Tape packlet
XACMtc	Non-menu	Nav	Display the XACMtc MAP level

Alarm_

The Alarm_ command is a common menu command. The Alarm_ command allows you to perform the following tasks:

- permit notification for selected alarms
- disable notification for selected alarms
- query the XA-Core system to identify alarm conditions or examine the status of alarms

Menu selection number

14

Type

Operational or Informational

Parameters

The Alarm_ command requires command parameters. If you do not enter any parameters or you enter invalid parameters, the MAP terminal prompts you to enter a correct parameter value. The Alarm_ command requires at least one of the following command parameters.

Alarm_name

Use the <alarm_name> parameter to indicate the name of the XA-Core system alarm. You can use the <alarm_name> parameter with the <disable> and <enable> parameters.

All

Use the <all> parameter to enable or disable notification for all alarms (use with the <enable> or <disable> parameter.

Disable

Use the <disable> parameter to prevent the XA-Core system from displaying alarm notification messages on the MAP screen. You can disable either one alarm at a time or all alarms. Use the <disable> parameter with the Alarm_ command and <alarm_name> parameter to disable a single alarm. Use the <disable> parameter with the <all> parameter to disable all XA-Core alarms. The <disable> parameter remains active until you enable the alarm or the system performs a restart.

Enable

Use the <enable> parameter to instruct the XA-Core system to display an alarm notification message on the MAP terminal. You can enable either one alarm or all alarms. Use the <enable> parameter together with the Alarm_

Tape MAP level (continued)

command and <alarm_name> parameter to enable a single alarm. Use the <enable> parameter with the <all> parameter to enable all XA-Core alarms.

Raised

Use the <raised> parameter to display all active alarms, the alarm severity and enabled/disabled status. You can use the <raised> parameter with the [enabled] or [disabled] options. If you do not enter any options, the XA-Core system MAP displays all active, enabled and disabled alarms.

Options

You can enter one of the following command options in the command statement.

Disabled

Use the [disabled] option with the <raised> parameter. The option instructs the XA-Core system to display all active alarms that have a disabled status.

Enabled

Use the [enabled] option with the <raised> parameter. The option instructs the XA-Core system to display all active alarms that have an enabled status.

Command format examples

Example use of the Alarm_ command is shown in Table "Alarm_ command examples". The Alarm_ command syntax is shown in the example below:

COMMAND <parameter> [option]

Alarm_ command examples (Sheet 1 of 2)

Command example	Command description
>ALARM tape	ALARM <alarm_name>: Display the alarm severity and status for a single alarm.
>ALARM all	ALARM <all>: Display the alarm severity and status for all alarms.
>ALARM all disable	ALARM <all> <disable>: Disable notification for all alarms.
>ALARM tape disable	ALARM <alarm_name> <disable>: Disable notification for a single alarm.
>ALARM all enable	ALARM <all> <enable>: Enable notification for all alarms.

Alarm_ command examples (Sheet 2 of 2)

Command example	Command description
>ALARM tape enable	ALARM <alarm_name> <enable>: Enable notification for a single alarm.
>ALARM raised	ALARM <raised>: Display all active alarms
>ALARM raised enabled	ALARM <raised> [enabled]: Display active alarms that have an enabled status
>ALARM raised disabled	ALARM <raised> [disabled]: Display active alarms that have an disabled status

AMDI

The AMDI command is a non-menu command. The AMDI command instructs the XA-Core system to display the AMDI MAP level.

Menu selection number

The Tape MAP level does not display an AMDI menu number.

Type

Navigational

Parameters

There are no command parameters.

Options

There are no command options.

Command format examples

Example use of the AMDI command is shown in Table "AMDI command example". The AMDI command syntax is shown in the example below:

COMMAND

AMDI command example

Command example	Command description
>AMDI	Exit from the current MAP session and display the AMDI MAP level.

Tape MAP level (continued)

Bsy_

The Bsy_ command places an InSv, SysB or CBsy tape packlet in a ManB state.

Menu selection number

7

Type

Operational

Parameters

The Bsy_ command requires command parameters. If you do not enter any parameters or you enter invalid parameters, the MAP terminal displays an error message. The MAP terminal prompts you to enter a correct parameter value. The Bsy_ command requires the following command parameters.

nn

Use the <nn> (slot number) parameter value to indicate the number of the physical shelf slot - 1 to 18.

s

Use the <s> (side) parameter value to indicate the packlet location in the physical shelf - front (f) or rear (r).

p

Use the <p> (position) parameter value to indicate the packlet location in an input/output processor (IOP) - upper (u) or lower (l).

Options

You can enter the following option in the Bsy_ command statement.

Force

The [force] option instructs the system to bypass redundancy checks and continue to execute the command.

When you use the [force] option in this MAP level, the system displays a message warning that the command will take the packlet out of service, and asking you to confirm the command.

If you confirm the command, the system may display another warning message and ask you to re-confirm the command. The system does this if some of the IO components in the system are unstable. The warning message identifies the unstable IO components, and tells you that executing the command might jeopardize the system further.

Use the [force] option with caution. The tape can be performing a read/write transaction and the forced Bsy_ command can cause loss of information.

Command format examples

Example use of the Bsy_ command is shown in Table "Bsy_ command examples". The Bsy_ command syntax is shown in the example below:

COMMAND <parameter> [option]

Bsy_ command examples

Command use	Command description
>BSY 2 f l	BSY <nn> <s> <p>: Place the disk packlet in a ManB state.
>BSY 2 f l force	BSY <nn> <s> <p> [force]: Place the disk packlet in a ManB state. Ignore possible error conditions.

CMIC

The CMIC command is a non-menu command. The CMIC command instructs the XA-Core system to display the CMIC MAP level.

Menu selection number

The Tape MAP level does not display a CMIC menu number.

Type

Navigational

Parameters

There are no command parameters.

Options

There are no command options.

Command format examples

Example use of the CMIC command is shown in Table "CMIC command example". The CMIC command syntax is shown in the example below:

Tape MAP level (continued)

COMMAND

CMIC command example

Command example	Command description
>CMIC	Exit from the current MAP session and display the CMIC MAP level.

Cntrs_

The Cntrs_ command instructs the XA-Core system to either display the current values of all non-zero system-busy (SysB) transition counters, or to reset to zero the SysB transition counters for a specified component. A SysB transition counter counts the number of times that a component's state changes from in-service to system-busy.

The system maintains separate SysB transition counters for each instance of each of the following components:

- IOP, HIOP, and HCMIC circuit packs
- all packlets: disk, tape, CMIC, RTIF, Ethernet, and AMDI
- sections of HIOP circuit packs that are supporting ETHR and AMDI connections
- sections of HCMIC circuit packs that are supporting CMIC, RTIF, and ETHR connections
- time-of-day (TOD) devices
- ports

For each component, the system counts the SysB transitions that occur during the current six-hour interval. It also remembers the totals from the seven preceding six-hour intervals. It sums the totals from the seven preceding intervals and the current interval, to obtain the total number of SysB transitions occurring during a 42-to-48-hour period.

The monitored components are divided into groups and for each group there are minor and major threshold values. The minor and major thresholds are for a 42-to-48-hour period. If a component's total number of SysB transitions for the 42-to-48-hour period equals or exceeds the minor threshold for its component group, and if a SysBTh minor or major alarm is not already in effect, the system raises a SysBTh minor alarm (unless the alarm has been disabled). If a component's total number of SysB transitions for the 42-to-48-hour period equals or exceeds the major threshold for its component group, and if a SysBTh major alarm is not already in effect, the system raises

a SysBTh major alarm (unless the alarm has been disabled). For information on the component groups, see the description of the "Query" parameter, below. For information on the SysBTh minor and major alarms and for information on disabling alarms, see the *XA-Core Maintenance Manual*, 297-8991-510.

Menu selection number

15

Type

Informational

Parameters

The Cntrs_ command requires either the <query> parameter or the <reset> parameter.

If you use the <query> parameter, no other parameters are permitted.

If you use the <reset> parameter, you must use additional parameters to specify a component: The <nn> and <s> parameters are required in all CNTRS RESET commands. The <p> parameter is required in some CNTRS RESET commands. The <device> parameter is required in some CNTRS RESET commands.

Query

The <query> parameter instructs the XA-Core system to display the following information.

- Either the value of all system-busy (SysB) transition counters that are greater than zero, or the message: `No SysB transitions on any components in the last 42-48 hrs.` A SysB transition counter counts the number of times that a component goes from the in-service state to the SysB state. For a list of the components for which the system maintains SysB transition counters, see the beginning of this "Cntrs_" section. The system maintains a separate SysB transition counter for each instance of each listed component, for example, for each TOD device. For each component, the system counts the SysB transitions that occur during the current six-hour interval. It also maintains a record of the totals from the seven preceding six-hour intervals. It sums the totals from the seven preceding intervals and the current interval, to obtain the total number of SysB transitions occurring during a 42-to-48-hour period.
- The values of the minor and major thresholds for each component group. (Component groups are described below.) The thresholds are shown in an output line that resembles the following:

Tape MAP level (continued)

SysBTh thresholds: (Min/Maj): PE=2/6; SM=2/4; IOhw=2/6; IOlk=2/8

> ***Note:*** The threshold values shown in the example are for illustrative purposes only. If the values shown in the example differ from the output of the CNTRS QUERY command, you should regard the command output as correct.

For each component group, a slash separates the minor and major threshold values. For example, “SM=2/4” means that the minor threshold for the SM group is 2, and the major threshold is 4.

The minor and major thresholds are for a 42-to-48-hour period. If a component’s total number of SysB transitions for the 42-to-48-hour period equals or exceeds the minor threshold for that group, and if a SysBTh minor or major alarm is not already in effect, the system raises a SysBTh minor alarm (unless the alarm has been disabled). If a component’s total number of SysB transitions for the 42-to-48-hour period equals or exceeds the major threshold for that group, and if a SysBTh major alarm is not already in effect, the system raises a SysBTh major alarm (unless the alarm has been disabled). For information on the SysBTh minor and major alarms and for information on disabling alarms, see the *XA-Core Maintenance Manual*, 297-8991-510.

The component groups are as follows.

— The PE group includes PE circuit packs.

— The SM group includes SM circuit packs.

— The IO link (IOlk) group includes IO links.

— The IO hardware (IOhw) group includes IOP, HIOP, and HCMIC circuit packs, all packlets, sections of HIOP circuit packs that are supporting ETHR and AMDI connections, sections of HCMIC circuit packs that are supporting RTIF, ETHR, and CMIC connections, time-of-day (TOD) devices, and ports.

Reset

The <reset> parameter instructs the system to reset to zero the value of the system-busy (SysB) transition counters for a specific component. The parameters following the <reset> parameter specify the component.

Use the <reset> parameter with the <nn> and <s> shelf location parameters for a circuit pack or with the <nn>, <s>, and <p> shelf location parameters for a

packlet. With the <reset> parameter, use the <device> parameter to identify a port or a link or a time-of-day device (TOD).

Note 1: Ordinarily, you should use the <reset> parameter only for links. Use it after you have corrected a link fault, to reset the SysB transition counters for the link.

Note 2: Ordinarily, for all components other than links, you should let the system reset the counters automatically. The system resets a component's counters automatically when you replace the component. Alternatively, if the SysB transitions stop occurring, the counters will revert to zero after seven six-hour intervals. At the beginning of each six-hour interval, the system starts a six-hour transition counter at zero and it adjusts the 42-to-48-hour total to reflect the seven preceding six-hour intervals. If the component goes through seven consecutive six-hour intervals without a SysB transition, all the counters revert to zero.

nn

Use the <nn> (slot number) parameter value to indicate the number of the physical shelf slot where a CP or packlet is located - 1 to 18. The component could be the CP or packlet, or it could be a device on the CP or packlet. The <nn> parameter is required in all cases.

s

Use the <s> (side) parameter value to indicate the location in the physical shelf of a CP or packlet - front (f) or rear (r). The component could be the CP or packlet, or it could be a device on the CP or packlet. The <s> parameter is required in all cases.

p

Use the <p> (position) parameter value to indicate the packlet location in an input/output processor (IOP) - upper (u) or lower (l). The <p> parameter is required if the component is a packlet or a device on a packlet.

Device

Use the <device> parameter if the component is a link, a port, or a TOD device.

Options

There are no command options.

Command format examples

Example use of the Cntrs_ command is shown in Table "Cntrs_ command examples". The Cntrs_ command syntax is shown in the example below.

Tape MAP level (continued)

COMMAND <parameter>

Cntrs_ command examples

Command example	Command description
>Cntrs query	CNTRS QUERY: Display the values of all non-zero SysB transition counters, and display the minor and major threshold values.
>Cntrs reset 14 r	CNTRS RESET <nn> <s>: Reset the SysB transition counter for the circuit pack in slot 14R (an IOP or HIOP circuit pack).
>Cntrs reset 15 r u	CNTRS RESET <nn> <s> <p>: Reset the SysB transition counter for the packlet in slot 15R, upper (a CMIC packlet).
>Cntrs reset 6 r u link	CNTRS RESET <nn> <s> <p> <device>: Reset the SysB transition counter for the link on the ethernet packlet in slot 6R, upper.
>Cntrs reset 4 r l port0	CNTRS RESET <nn> <s> <p> <device>: Reset the SysB transition counter for port0 (the local port) on the RTIF packlet in slot 4R, lower.
>Cntrs reset 13 r l link0	CNTRS RESET <nn> <s> <p> <device>: Reset the SysB transition counter for link0 on the AMDI packlet in slot 13R, lower.
>Cntrs reset 14 r link1	CNTRS RESET <nn> <s> <device>: Reset the SysB transition counter for link1 on the AMDI section of the HIOP circuit pack in slot 14R.
>Cntrs reset 15 r tod0	CNTRS RESET <nn> <s> <device>: Reset the SysB transition counter for the tod0 time-of-day device on the CMIC section of the HCMIC circuit pack in slot 15R.

Disk

The Disk command is a non-menu command. The Disk command instructs the XA-Core system to display the Disk MAP level.

Menu selection number

The Tape MAP level does not display a Disk menu number.

Type

Navigational

Parameters

There are no command parameters.

Options

There are no command options.

Command format examples

Example use of the Disk command is shown in Table "Disk command example". The Disk command syntax is shown in the example below:

COMMAND

Disk command example

Command example	Command description
>DISK	Exit from current MAP session and display the Disk MAP level

ETHR

The ETHR command is a non-menu command. The ETHR command instructs the XA-Core system to display the ETHR MAP level.

Menu selection number

The Tape MAP level does not display an ETHR menu number.

Type

Navigational

Parameters

There are no command parameters.

Options

There are no command options.

Command format examples

Example use of the ETHR command is shown in Table "ETHR command example". The ETHR command syntax is shown in the example below:

Tape MAP level (continued)

COMMAND

ETHR command example

Command example	Command description
>ETHR	Exit from the current MAP session and display the ETHR MAP level.

Indicat_

The Indicat_ command is a common command. The command causes LEDs on CPs or packlets to wink or illuminate. The command allows you to locate a device on the physical shelf or to make sure all LEDs work. CPs and packlets must be in a ManB state before you use the Indicat_ card command.

> ***Note:*** If you use the Indicat_ command with the <test> or <testall> parameters, CPs and packlets do not have to be in a ManB state.

Menu selection number

17

Type

Informational

Parameters

The Indicat_ command requires parameters. If you do not enter any parameters or you enter invalid parameters, the MAP terminal displays an error message. The MAP terminal prompts you to enter a correct parameter value.

The Indicat_ command requires at least two of the shelf location parameters. In addition to the shelf location parameters, you can enter one of the following parameters.

Card

Use the <card> parameter to cause the red triangular LED of a SysB (system busy) or ManB CP or packlet to wink. You can use the [timer] option with the <card> parameter.

Clear

Use the <clear> parameter to return LEDs to a normal working state on a single winking or testing CP or packlet. Use the <clear> parameter with the shelf location parameters.

Clearall

Use the <clearall> parameter to return all winking or testing LEDs on all CPs or packlets to a normal working state.

Test

Use the <test> parameter to light the red LED on a single CP or packlet. The CP or packlet does not have to be in a ManB state. LEDs already winking on other CPs or packlets continue to wink. Use the <test> parameter with the shelf location parameters. You can use the <test> parameter with the [timer] option.

Testall

Use the <testall> parameter to light all LEDs on all CPs and packlets. The CPs and packlets do not have to be in a ManB state. LEDs already winking on other CPs or packlets continue to wink. You can use the <testall> parameter with the [timer] option. Do not use the shelf location parameters with the <testall> parameter.

nn

Use the <nn> (slot number) parameter value to indicate the number of the physical shelf slot - 1 to 18.

s

Use the <s> (side) parameter value to indicate the CP or packlet location in the physical shelf - front (f) or rear (r).

p

Use the <p> (position) parameter value to indicate the packlet location in an input/output processor (IOP) - upper (u) or lower (l).

Options

You can enter the following option in the command statement.

Timer

Use the [timer] option to indicate the time (in minutes) to light or wink LEDs. The XA-Core system turns the LEDs off when the time expires. The minimum time period is 1 min. The maximum time period is 999 min. If you do not define a time period, the default time period is 120 min.

Tape MAP level (continued)

Use the [timer] option as follows:

- use the [timer] option with the <card> parameter to wink a red LED on a single CP or packlet for a period of time.
- use the [timer] option with the <test> parameter to light the red LED on a CP or packlet for a period of time.
- use the [timer] option with the <testall> parameter to light the red LED on all CPs and packlets for a period of time.

Command format examples

Example use of the Indicat_ command is shown in Table "Indicat_ command examples". The Indicat_ command syntax is shown in the example below:

COMMAND <parameter> [option]

Indicat_ command examples (Sheet 1 of 2)

Command example	Command description
>INDICAT card 4 r u	INDICAT <card> <nn> <s> <p>: Wink red LED on a single ManB packlet.
>INDICAT card 4 r u 5	INDICAT <card> <nn> <s> <p> [timer]: Wink red LED on a single ManB packlet for 5 min.
>INDICAT clear 4 r u	INDICAT <clear> <nn> <s> <p>: Return LEDs on a single packlet to a normal working state.
>INDICAT clearall	INDICAT <clearall>: Return all LEDs on all CPs and packlets to a normal working state.
>INDICAT test 4 r 5	INDICAT <test> <nn> <s> [timer]: Light all LEDs on a single CP for 5 min. If the command does not include the [timer] option, the XA-Core default time value is 120 min.
>INDICAT testall 5	INDICAT <testall> [timer]: Light all LEDs on all CPs and packlets for 5 min. The amber LEDs on the shelf interface modules (SIM) CPs do not light. The <test> parameter does not cause an audible alarm nor alarm notification on the MAP terminal. CPs or packlets now under test continue to wink

Indicat_ command examples (Sheet 2 of 2)

Command example	Command description
>INDICAT testall	INDICAT <testall>: Light all LEDs on all CPs and packlets for 120 min.

IO

The IO command is a non-menu command. The IO command instructs the XA-Core system to display the IO MAP level.

Menu selection number

The Tape MAP level does not display an IO menu number.

Type

Navigational

Parameters

There are no command parameters.

Options

There are no command options.

Command format examples

Example use of the IO command is shown in Table "IO command example". The IO command syntax is shown in the example below:

COMMAND

IO command example

Command example	Command description
>IO	Exit from the current MAP session and display the IO MAP level.

PE

The PE command is a non-menu command. The PE command instructs the XA-Core system to display the XA-Core processor element (PE) MAP level.

Menu selection number

The Tape MAP level does not display a PE menu number.

Tape MAP level (continued)

Type

Navigational

Parameters

There are no command parameters.

Options

There are no command options.

Command format examples

Example use of the PE command is shown in Table "PE command example". The PE command syntax is shown in the example below:

COMMAND

PE command example

Command example	Command description
>PE	Exit from the current MAP session and display the PE MAP level.

Query_

The Query_ command is a common command. The Query_ command causes the MAP terminal to display the following information for a single packlet:

- the product engineering code (PEC)
- the hardware release
- the baseline hardware release (as specified in table PECINV)
- whether the hardware is compatible with the baseline and exception specifications (specifications found in table PECINV)
- the serial number

The parameters determine the type of information displayed.

Menu selection number

18

Type

Informational

Parameters

The Query_ command requires command parameters. If you do not enter any parameters or you enter invalid parameters, the MAP terminal displays an error message. The MAP terminal prompts you to enter a correct parameter value.

If you use the Query_ command with the <card> parameter, enter the shelf location parameters. If you use the Query_ command with the <type> parameter or with the <shelf> parameter, do not enter the shelf location parameters.

Card

Use the <card> parameter to instruct the XA-Core system to perform a query on a CP or packlet. Display the description to the MAP terminal. You must use the <card> parameter with the CP or packlet shelf location parameters.

nn

Use the <nn> (slot number) parameter value to indicate the number of the physical shelf slot - 1 to 18.

s

Use the <s> (side) parameter value to indicate the CP or packlet location in the physical shelf - front (f) or rear (r).

p

Use the <p> (position) parameter value to indicate the packlet location in an input/output processor (IOP) - upper (u) or lower (l).

Shelf

Use the <shelf> parameter to instruct the XA-Core system to retrieve information about all the components installed in the shelf. The <shelf> parameter retrieves the information you would obtain by entering the Query card command for every circuit pack and packlet in the XA-Core.

Subsystem_name

Use the <subsystem_name> parameter to indicate the name of a subsystem. The value of the subsystem name is either SM, PE, or IO. Use the <subsystem_name> parameter only with the <type> parameter.

Type

Use the <type> parameter to indicate that the query applies to a subsystem of type SM, PE, or IO. Use the <type> parameter with the <subsystem name> parameter. The MAP terminal displays the location of all CPs that match the subsystem type. Do not enter shelf location parameters.

Tape MAP level (continued)

Options

There are no command options.

Command format examples

Example use of the Query_ command is shown in Table "Query_ command examples". The Query_ command syntax is shown in the example below:

COMMAND <parameter>

Query_ command examples

Command example	Command description
>QUERY card 4 r	QUERY <card> <nn> <s>: Display the PEC, serial number, insertion/activation dates software load, firmware version and working state for the CP.
>QUERY card 7 r u	QUERY <card> <nn> <s> <p>: Display the PEC, serial number, insertion/ activation dates, software load, firmware version and working state for the packlet.
>QUERY shelf	QUERY <shelf>: Display the PEC, serial number, insertion/activation dates, software load, firmware version, and working state for every CP and packlet in the shelf.
>QUERY type io	QUERY <type> <subsystem_name>: Display subsystem name and location of all CPs and packlets that match the subsystem type.

Quit

The Quit command is a common command. The Quit command instructs the XA-Core system to exit from the current MAP session. You can exit to any MAP level that is higher in the MAP level hierarchy.

Note: The XA-Core system continues to execute any previous commands entered.

Menu selection number

0

Type

Navigational

Parameters

The Quit command parameters are optional.

All

Use the <all> parameter to terminate all XA-Core MAP sessions and display the CI prompt.

Incrname

Use the <incrname> parameter to end the current MAP session and display a MAP level higher in the MAP system hierarchy. Enter a MAP level name. The XA-Core system displays the MAP level that is one level higher in the MAP system hierarchy than the <incrname> (increment name) value.

Nlevel

Use the <nlevel> parameter to end the current MAP session and display a MAP level higher in the MAP system hierarchy. Enter a number value to represent the number of DMS MAP levels to step-back in the MAP system hierarchy.

Options

There are no command options.

Command format examples

Example use of the Quit command is shown in Table "Quit command examples". The Quit command syntax is shown in the example below:

COMMAND <parameter>

Quit command examples (Sheet 1 of 2)

Command example	Command description
>QUIT	Use the Quit command with no parameters to exit from the current MAP session. Display a MAP level that is one level above the current MAP session level.
>QUIT mtc	QUIT <incrname>: Exit the current MAP session. Display the MAP level that is one level above the indicated MAP level name.

Tape MAP level (continued)

Quit command examples (Sheet 2 of 2)

Command example	Command description
>QUIT 2	QUIT <nlevel>: Exit the current MAP session. Display the MAP level that is two levels above the current MAP session in the MAP hierarchy.
>QUIT all	QUIT <all>: Exit from all MAP sessions and display the CI prompt.

RTIF

The RTIF command is a non-menu command. The RTIF command instructs the XA-Core system to display the remote terminal interface (RTIF) MAP level.

Menu selection number

The Tape MAP level does not display an RTIF menu number.

Type

Navigational

Parameters

There are no command parameters.

Options

There are no command options.

Command format examples

Example use of the RTIF command is shown in Table "RTIF command example". The RTIF command syntax is shown in the example below:

COMMAND

RTIF command example

Command example	Command description
>RTIF	Exit from the current MAP session and display the RTIF MAP level.

RTS_

The RTS_ command instructs the XA-Core system to test and return a ManB or OOS tape packlet to service.

Menu selection number

8

Type

Operational

Parameters

The RTS_ command requires parameters. If you do not enter any parameters or you enter invalid parameters, the MAP terminal displays an error message. The MAP terminal prompts you to enter a correct parameter value.

The RTS_ command requires the following parameters.

nn

Use the <nn> (slot number) parameter value to indicate the number of the physical shelf slot - 1 to 18.

s

Use the <s> (side) parameter value to indicate the packlet location in the physical shelf - front (f) or rear (r).

p

Use the <p> (position) parameter value to indicate the packlet location in an input/output processor (IOP) - upper (u) or lower (l).

Options

You can enter the following option in the command statement.

Nowait

Use the [nowait] option to execute the RTS_ command. Display the MAP prompt to allow you to continue with other work while the system returns the disk to service.

Command format examples

Example use of the RTS_ command is shown in Table "RTS command example". The RTS_ command syntax is shown in the example below:

COMMAND <parameter>

RTS command example (Sheet 1 of 2)

Command example	Command description
>RTS 2 f u	RTS <nn> <s> <p>: Test and return the ManB tape packlet to service.

Tape MAP level (continued)

RTS command example (Sheet 2 of 2)

Command example	Command description
>RTS 2 f u nowait	RTS <nn> <s> <p> [nowait]: Test and return the ManB tape packlet to service. Display the MAP prompt and enter other commands.

SM

The SM command is a non-menu command. The SM command instructs the XA-Core system to display the shared memory (SM) MAP level.

Menu selection number

The Tape MAP does not display an SM menu number.

Type

Navigational

Parameters

There are no command parameters.

Options

There are no command options.

Command format examples

Example use of the SM command is shown in Table "SM command example". The SM command syntax is shown in the example below:

COMMAND

SM command example

Command example	Command description
>SM	Exit from the current MAP session and display the SM MAP level.

Tst_

The Tst (Test) command instructs the XA-Core system to perform tests on a tape packlet. The type of test performed depends on the working state (in-service or out-of-service) of the tape packlet.

An InSv test performs non-destructive tests. An OOS test performs both destructive and non-destructive tests.

Menu selection number

6

Type

Operational

Parameters

The Tst_ command requires parameters. If you do not enter any parameters or you enter invalid parameters, the MAP terminal displays an error message. The MAP terminal prompts you to enter a correct parameter value.

The Tst_ command requires the following command parameters.

nn

Use the <nn> (slot number) parameter value to indicate the number of the physical shelf slot - 1 to 18.

s

Use the <s> (side) parameter value to indicate the packlet location in the physical shelf - front (f) or rear (r).

p

Use the <p> (position) parameter value to indicate the packlet location in an input/output processor (IOP) - upper (u) or lower (l).

Options

You can use the following command option in the command statement.

Nowait

Use the [nowait] option with the RTS_ command. Display the MAP prompt to allow you to enter other commands while the system performs the tests.

Command format examples

Example use of the Tst_ command is shown in Table "Tst_ command examples". The Tst_ command syntax is shown in the example below:

Tape MAP level (continued)

COMMAND <parameter> [option]

Tst_ command examples

Command example	Command description
>TST 2 f u	TST <nn> <s> <p>: Perform a test on the indicated tape packlet.
>TST 2 f u nowait	TST <nn> <s> <p> [nowait]: Perform a test on the indicated tape packlet. Display the MAP prompt and enter other MAP commands.

Uneq_

Use the uneq_ command to remove a tape packlet from the inventory.

Menu selection number

12

Type

Operational

Limitations and restrictions

If applied to a tape packlet, the command will only execute on a ManB slot. If the slot is not ManB, the command will fail. Before applying the command to a packlet, remove the packlet from the slot.

Parameters

The uneq_ command requires command parameters. If you do not enter any parameters or you enter invalid parameters, the MAP terminal displays an error message. The MAP terminal prompts you to enter a correct parameter value.

nn

Use the <nn> (slot number) parameter value to indicate the number of the physical shelf slot - 1 to 18 for the front plane, 4 to 15 for the rear plane.

s

Use the <s> (side) parameter value to indicate the CP or packlet location in the physical shelf - front (f) or rear (r).

p

Use the <p> (position) parameter to indicate the packlet location, upper (u) or lower (l).

Options

There are no command options.

Command format examples

Example use of the uneq_ command is shown in Table "Uneq_ command example". The uneq_ command syntax is shown in the example below:

COMMAND <parameter>

Uneq_ command example

Command example	Command description
>UNEQ 2 f ul	UNEQ <nn> <s> <p>: Unequip a tape packlet

XACMtc

The XACMtc command is a non-menu command. The XACMtc command instructs the XA-Core system to display the XA-Core maintenance (XACMtc) MAP level.

Menu selection number

The Tape MAP level does not display an XACMtc menu number.

Type

Navigational

Parameters

There are no command parameters.

Options

There are no command options.

Command format examples

Example use of the XACMtc command is shown in Table "XACMtc command example". The XACMtc command syntax is shown in the example below:

COMMAND

XACMtc command example

Command example	Command description
>XACMTC	Exit from the current MAP session and display the XACMtc MAP level.

This page is left blank intentionally.

Reset terminal interface (RTIF) commands

Introduction to RTIF commands

Operating company personnel use the reset terminal interface (RTIF) as an interface to the DMS SuperNode or DMS SuperNode SE switch. The RTIF display for a switch with XA-Core provides two types of interfaces as follows.

- an interface to start resets and restarts on the switch
- an interface to the serial input/output (IO) resource of the switch

The RTIF can be an interface to start resets and restarts on the switch. The RTIF display can have command entries that start boots, cold restarts, reload restarts, and warm restarts on the switch.

The RTIF can be an interface to the serial input/output (IO) resource of the switch. The RTIF display can have single-line command entries to a MAP display. The single-line command entry can access the command interpreter (CI) and each MAP level of the XA-Core. The RTIF display cannot view the complete MAP level display. The RTIF display has a single-line command entry to the MAP levels of XA-Core.

The commands and maintenance activities of the RTIF are for operating company personnel with experience. Wrong use of RTIF commands can interrupt subscriber service.

The RTIF display for XA-Core has four windows as follows.

- status window
- command window
- response window
- console window

Figure shows an example of a display of an RTIF screen for XA-Core.

Reset terminal interface (RTIF) commands (continued)

Example of an RTIF display for XA-Core

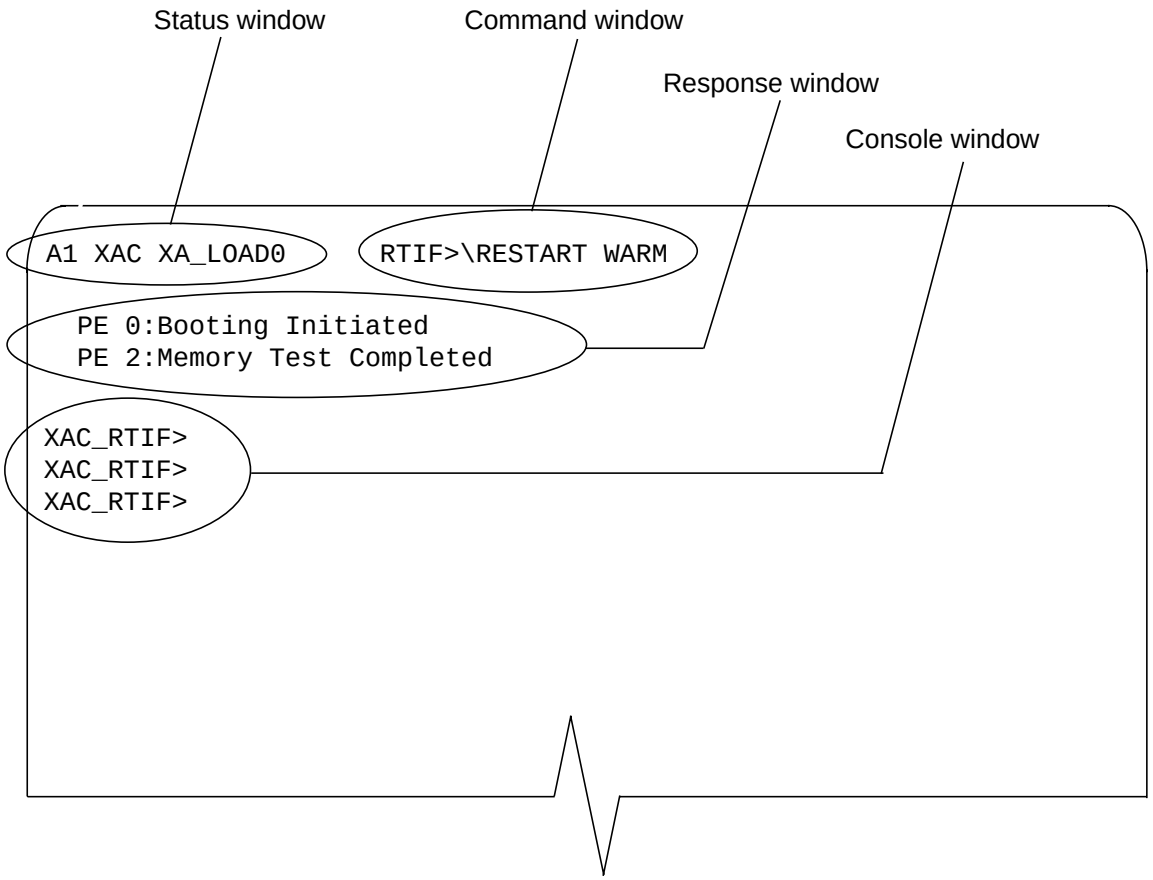

The status window shows the following.

- status of the operational state of the switch (displays a flashing event code)
- identity of the RTIF for XA-Core (displays XAC)
- name of the software load that runs on the XA-Core

The command window and the response window are for the last entered command. The command window echoes the last entered command from the console window. The response window displays the switch response to the last entered command.

The console window displays console data sent by the firmware and the software. The console window has no data related to an RTIF command. When operating company personnel enter an RTIF command in the console window, the command text moves to the command window. The console window

Reset terminal interface (RTIF) commands (continued)

changes to a full screen window when operating company personnel enter an RTIF command \STATUS.

This section describes the RTIF commands for XA-Core. RTIF commands begin with a \ (*back slash*) character. Perform the following commands at an RTIF terminal.

\ (Backslash)

The \ (back slash) command allows operating company personnel to check for RTIF activity. The operating company personnel enters the \ (back slash) with no other text or data to check for RTIF activity. This command also enables the status window, command window, and the response window of the RTIF screen display after use of the \STATUS command.

\BOOT

This command forces a reset which loads an image from a specified small computer system interface (SCSI) device.

Table shows the \BOOT command parameters.

\BOOT command parameters

Parameter	Description
<slot_number>	Boots from a packlet in the IOP card of the indicated slot number of the XA-Core shelf.
<front_or_rear>	Boots from a packlet in the IOP card on the front or rear side of the XA-Core shelf.
<upper_or_lower>	Boots from a packlet in the upper or lower slot of the IOP card.
default	Automatic boot when no parameters used.

\CLEAR

This command clears the display screen.

\GET

This command removes the RTIF console from the processor element (PE) or low level maintenance (LLM) user. This command instructs the RTIF console to run the input output processor (IOP) firmware command interpreter (FWCI).

Reset terminal interface (RTIF) commands (continued)

\HELP

This command displays information to use an RTIF command or a list of RTIF commands.

\HELP command parameters

Parameter	Description
<rtif_command>	Displays information to use the RTIF command.

Note: The default parameter displays a list of RTIF commands.

\LOADNAME

In response to this command, the system returns the loadname.

\LOCBAUD

This command sets the baud rate of the local port of the RTIF packlet.

\LOCBAUD command parameters

Parameter	Description
<baud_rate>	Sets baud rate of the local port of the RTIF packlet.

\NO

This command provides negative acknowledgment to an approval prompt for a reset command.

\OVERIDE

This command indicates the beginning of a reset command.

\PUT

This command passes the RTIF console back to the original user. The original user is either for the processor element (PE) or the low level maintenance (LLM).

\QUERY

This command queries the RTIF parameters.

Reset terminal interface (RTIF) commands (continued)

\REMBAUD

This command sets the baud rate of the remote port of a RTIF packlet.

\REMBAUD command parameters

Parameter	Description
<baud_rate>	Sets baud rate of the remote port of a RTIF packlet.

\RESET

This command begins a reset for XA-Core.

\RESET command parameters

Parameter	Description
<RESTART>	Begins a reset with a restart.
<FWCI>	Begins a reset from the firmware command interpreter (FWCI).
default	Default is a restart.

Reset terminal interface (RTIF) commands (end)

\RESTART

This command begins a restart for XA-Core.

\RESTART command parameters

Parameter	Description
<WARM>	One-to-one calls in process remain in process and temporary data store clears.
<COLD>	Calls in process remain in process until the peripherals start again. When peripherals start again, the switch lets go of calls in process. Temporary data store clears.
<RELOAD>	Calls in process remain in process until the peripherals start again. When peripherals start again, the switch lets go of calls in process. Temporary and permanent data store clears. Data store RAM clears and deallocates.
<RTIF>	Restores firmware of RTIF. XA-Core not changed.

Note: The default parameter is a warm restart.

\STATUS

This command disables the status window, command window, and the response window of the RTIF screen display. This command changes the console window to full screen. The command \ (back slash) enables the status window, command window, and the response window of the RTIF screen display.

\YES

This command provides positive acknowledgment to an approval prompt for a reset command.

5 XA-Core hardware description overview

Product overview

XA-Core (eXtended Architecture Core) is designed as a next generation replacement for the computing module (CM) and system load module (SLM) within DMS systems. XA-Core is targeted for both retrofit and new installations, and is available for both SuperNode and SuperNode SE systems. XA-Core is designed as a direct replacement for the CM/SLM and, as such, fits cleanly into the DMS architecture.

In order to allow a clean fit into existing DMS frames, XA-Core is incorporated into a single shelf of the same height and form-factor as existing DMS shelves. To allow circuit packs to fit into both front and rear slots, a midplane shelf design has been adopted that provides for 18 slots in the front and 14 slots in the rear.

In the SuperNode-XA configuration, the CM and SLM shelves are replaced with one XA-Core shelf. In the SNSE-XA configuration, the CM/SLM shelf is replaced with the new XA-Core shelf. An XA-Extension cabinet will be used for upgrades of existing offices and contains an XA-Core shelf.

XA-Core is comprised of a single shelf containing the following types of circuit packs:

- processor element (PE) circuit packs
- circuit packs for input and output
  - — input/output processor (IOP) circuit packs
  - — high performance input/output (HIOP) circuit packs
  - — high performance CMIC (HCMIC) circuit packs
- shared memory (SM) circuit packs

Together, these circuit packs form a high-performance, multiprocessing compute engine that is completely scalable in terms of processing, memory,

and I/O capability. Adjusting the capacity of the system or adding another interface is as simple as plugging in a new pack.

The operation of XA-Core is based on multiple circuit packs (processor element (PE) circuit packs and the circuit packs for input and output) operating on a single, large, shared memory system. This memory system, comprised of multiple shared memory (SM) circuit packs and simply referred to as “shared memory”, contains all data store for XA-Core, while all program store is stored locally in cache on every processor pack.

As with all multiprocessing systems, the trick is to choose an efficient method of dividing up the work load among processors such that real gains in processing capacity can be realized. In addition, XA-Core was challenged with the need to have most legacy application software run without modification. To achieve this, XA-Core divides up the work load based on processes. Fundamentally, when a processor becomes free, it runs the scheduler to get the next process waiting to run, and then executes it until swapped out by the scheduler.

To meet the demands that the XA-Core architecture places on inter-card connectivity, a point-to-point midplane technology called eXtended Architecture Interconnect (XAI) is employed.

The midplane is a printed circuit board (PCB) that is like a backplane. The XA-Core shelf has the midplane located in the center of the shelf between the front and back slots for circuit packs and packlets. The midplane is a non-contact midplane. A non-contact midplane has electromagnetic field couplers and connector pins for circuit pack connections to the midplane. These couplers connect through the effect of an electromagnetic field from one pair of circuit tracks to another pair. A voltage on a transmit pair of circuit tracks induces a small voltage pulse on a receive side of another track pair. Each coupler has a small transmitter and antenna embedded in the midplane circuit tracks. The non-contact midplane allows circuit pack insertion and removal in a live state of electrical power.

As shown in the following figure, XAI provides individual, point-to-point connections between processor element (PE) circuit packs and the input/output circuit packs (IOP, HIOP, and HCMIC) via the shared memory (SM) circuit packs. All transmit links out of a PE, IOP, HIOP, or HCMIC are monitored by all SM circuit packs, and all return links (transmit out of the SM) are monitored by all PE, IOP, HIOP, and HCMIC circuit packs. An address field in every transaction allows each pack to determine if that transaction is destined for it or not. All links are bit-serial, gigabit links with non-contact connections at the receive ports. This allows circuit packs to be live-inserted, and also prevents a failed receive port from potentially disabling a link that is still being shared by other circuit packs.

Figure 5-1 XA-Core multiprocessor architecture with XAI midplane

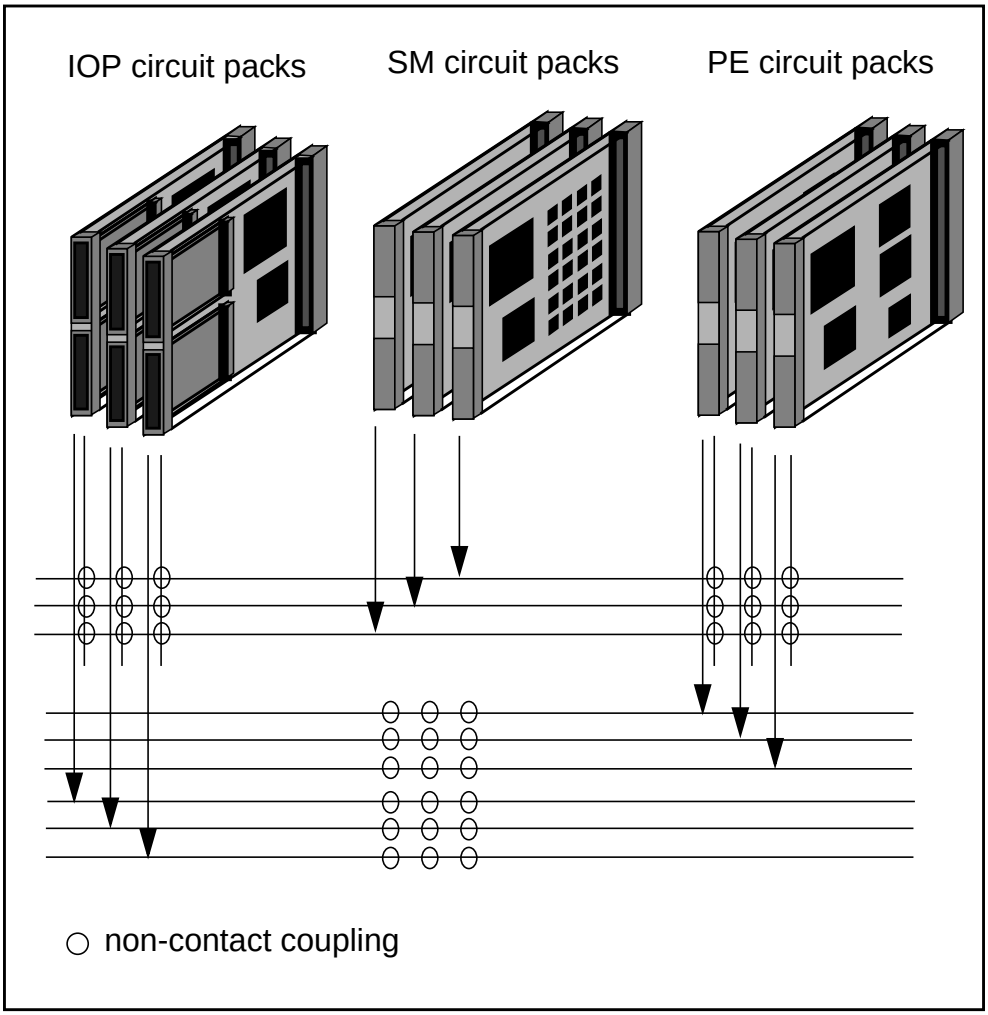

The processor element (PE) pack is based on the PowerPC series of microprocessors. Instead of having two processor cards running in lock-step sync (as in SuperNode), XA-Core uses a variable number of processor circuit packs with each one executing completely independently. Fault detection on the PE pack is provided by running two processors in sync on each PE pack and matching all bus transactions. A symmetric multiprocessing architecture was chosen, meaning that there is no permanently assigned “master” PE pack. All PE circuit packs are treated identically such that any PE pack can and does run all code. As long as at least one PE pack is operating without a fault, the system will operate.

The shared memory (SM) pack provides for the mutual exclusion of data necessary to allow multiple processors to execute simultaneously. This mutual exclusion is based on the concept of ownership of data. Once a processor (PE) accesses a piece of data, its owns that data until it is done with it. If a second

processor attempts to access that data before it has been released by the first, the shared memory pack will send a collision notification to the second processor, telling it to terminate the data access. This blocking will cause the second processor to abort its execution and notify shared memory to return all of the data changed by the aborted task to their previous values. This is termed a process rollback. The processor then re-runs the scheduler to pick up an alternate task and returns the aborted task to the scheduler so that it can be attempted later.

XA-Core input/output (I/O) and mass storage requirements are addressed using one of the following:

- Input/output (IOP) circuit packs. IOP circuit packs contain daughter cards called packlets. Each packlet provides some type of I/O or storage service, and each IOP circuit pack can accept up to two packlets. Services are provided by populating XA-Core with an appropriate number of IOP circuit packs and, in turn, populating each IOP pack with the required packlets. The following packlets are available:
  - SCSI tape (transportable mass storage) packlet
  - SCSI disk (non-transportable mass storage) packlet
  - RS-232C/422 reset terminal interface (RTIF) packlet
  - OC-3 core to message switch interconnect (CMIC) packlet
  - OC-3 ATM multi-node data interface (AMDI) two-port interface packlet
  - Ethernet interface packlet
- High performance IOP (HIOP) circuit packs. HIOP circuit packs do not take packlets. Each HIOP circuit pack has a section that supports AMDI links and a section that can support an ethernet link.
- High performance CMIC (HCMIC) circuit packs. HCMIC circuit packs do not take packlets. Each HCMIC circuit pack has a section that supports CMIC links, a section that supports RTIF links, and a section that can support an ethernet link.

Most data transfers between processor element (PE) circuit packs and IOP, HIOP, or HCMIC circuit packs will take place via queues in shared memory. IOP, HIOP, and HCMIC circuit packs are allowed to write only to special areas in shared memory called staging areas. These areas are set up specifically to provide a region in which to locate queues that need to be written into by the IOP, HIOP, and HCMIC. Any write access outside of these areas will be faulted. This restriction does not apply to read accesses, so IOP, HIOP, and HCMIC circuit packs are allowed global read access to any data they may need.

NT9X13DG

Product description

The NT9X13DG processor card is a high-performance microcomputer board based on the Motorola MC68020 32-bit microprocessor. The card uses all 16 Mbytes of available memory.

The NT9X13DG has the following features:

- 16 MHz MC68020 CPU
- memory access protection, write protect
- 16 Kilobyte data cache
- dual channel serial communications controller (SCC)
- 16 Mbyte DRAM with ECC
- P-bus compatibility
- 256 kilobyte of EPROM
- element identification (ID) PROM
- timers
- interrupts
- status and control registers
- fault indication registers (FIR)

Location

The NT9X13DG is in this slot for the following application:

- in slot 9 for DMS SuperNode

Functional description

The NT9X13DG card performs the same functions as the NT9X13DD card, but the firmware of the DG version is changed to accommodate the fiber-optic initialization of the XA-Core shelf. The redesigned firmware makes the NT9X13DG card compatible with the NT9X63AA paddle board, which provides an interface to the fiber-optic links in the XA-Core shelf.

Functional blocks

The NT9X13DG has the following functional blocks:

- MC68020 CPU
- memory access unit (MAU)
- memory controller (MEM) and memory array

NT9X13DG (continued)

- maintenance, timing, and control (MTC)
- matcher (MCH)

The relationship between the functional blocks appear in the following figure.

NT9X13DG functional blocks

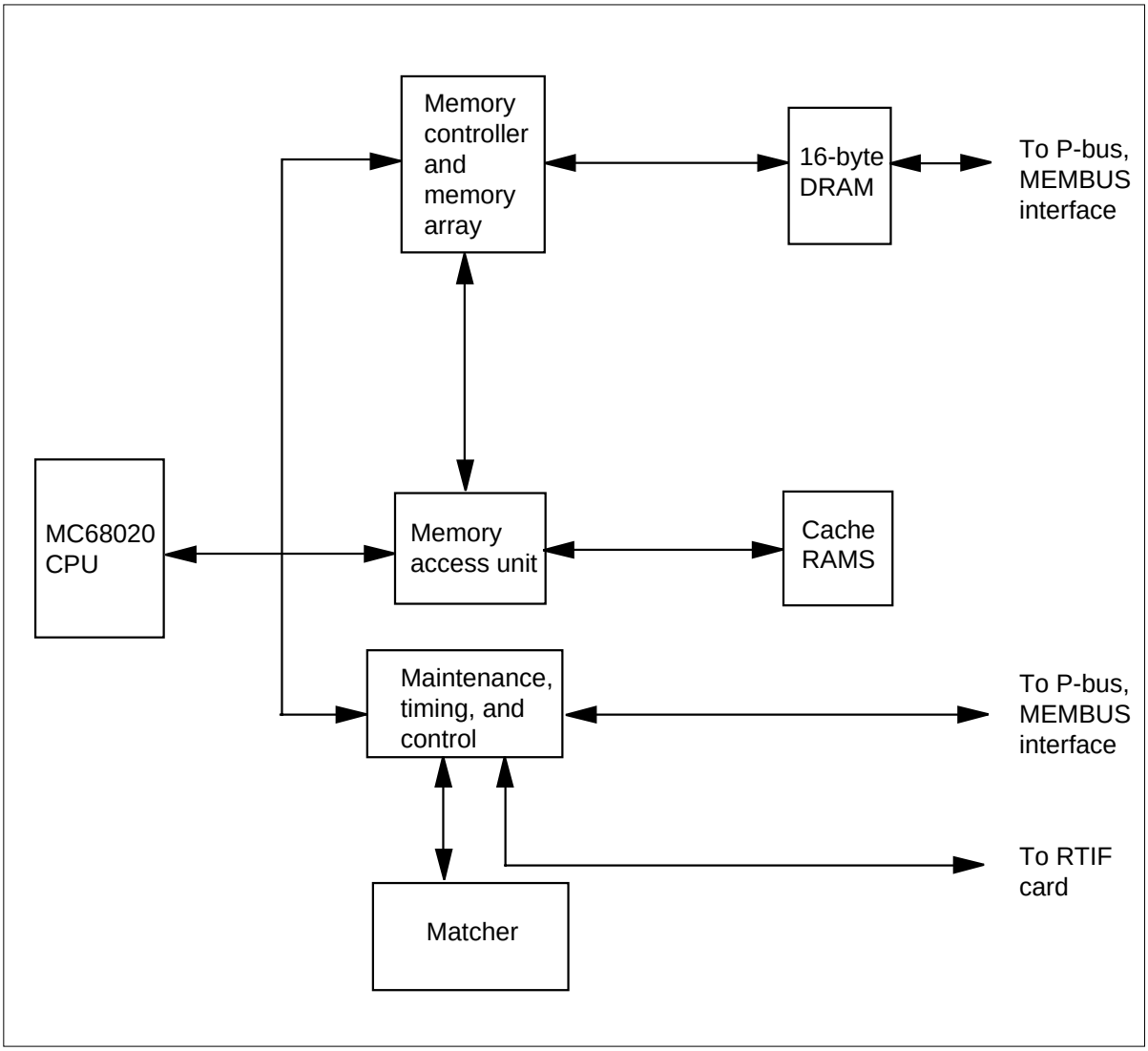

68020 central processing unit

The Motorola 16 MHz MC68020 CPU is the first 32-bit external bus implementation of the MC68000 family of Motorola microprocessors. The

CPU provides improved performance over earlier versions. The following resources are available:

- sixteen 32-bit general purpose address and data registers
- two 32-bit supervisor stack points
- a 32-bit program counter
- five special purpose control registers
- 4 Gbyte direct address range
- 18 addressing modes
- memory mapped I/O
- high performance on chip 256 kilobyte instruction cache
- 32-bit upgraded and current instructions
- operations on seven data types

To improve performance and function, the CPU also has the following hardware features:

- multiple micro-engines for a very efficient concurrent pipeline operation
- high performance 32-bit barrel shifter in ALU
- dynamic bus sizing
- coprocessor interface

Memory access unit (MAU)

The MAU controls a data cache and provides address space access protection in 64 kbyte blocks. The MAU starts a parity protection scheme on bus accesses and the data cache. The MAU supplies the necessary control signals for the extended multiprocessor system (XMS) P-bus specification and the SuperNode memory bus specification.

Memory controller (MEM) and memory array

The memory module uses a 4 Mbit DRAM in a 16 Mbyte memory bank. The memory controller operates in the 32-bit environment, corrects any single data errors, and detects double or multiple errors.

Maintenance, timing, and control (MTC)

The MTC interfaces with the CPU. The MTC provides the CPU with basic signals. The signals include clock, reset, and chip selects to the associated EPROM and other peripheral modules. The MTC includes an interval timer that can be in a number of modes, and a sanity timer. Interrupts from different sources are latched, encoded and passed to the processor at a fixed priority.

NT9X13DG (end)

Maintenance circuits latch system fault detections so that the CPU can read, write or clear the detections.

The MTP provides the interface to the SCC for reset terminal interface (RTIF) communications. In duplex operation, the MTC provides clock detection and selection. The MTC also provides a serial FIR to obtain information about the mate system clock and control signals. This action allows the CPU that requests to get information from a mate that is not operational.

Matcher (MCH)

Matcher performs the following functions.

- It maintains a hardware lock on the address hold register and unlocks by recovery-diagnostic software after fault detection.
- It provides a 32-bit maintenance control register in which the data bus can write. The mate CPU can read this register with a signal the CPU supplies. The signal laces the mate communication register (MCR) on the operational measurements (OM) bus.

Technical data

Power requirements

The NT9X13DG requires +5V, + or - 5%.

NT9X13NB

Product description

The NT9X13NB processor card is a high-performance microcomputer board based on the Motorola MC68020 32-bit microprocessor. The card uses all 16 Mbytes of available memory.

The NT9X13NB has the following features:

- 16 MHz MC68020 CPU
- memory access protection, write protect
- 16 kbyte data cache
- dual channel serial communications controller (SCC)
- 16 Mbyte DRAM with ECC
- P-bus compatibility
- 256 kbyte of EPROM
- element identification (ID) PROM
- timers
- interrupts
- status and control registers
- fault indication registers (FIR)

Location

The NT9X13NB is in these slots for the following applications:

- in slots 17, 22 for DMS SuperNode SE
- in slots 10, 20 for ENET
- in slots 17, 22 for the SSLPP for DMS SuperNode SE

Functional description

The NT9X13NB card performs the same functions as the NT9X13NA card, but the firmware of the NB version is changed for the fiber-optic initialization of the XA-Core shelf. The redesigned firmware makes the NT9X13NB card compatible with the NT9X63AA paddle board, which provides an interface to the fiber-optic links in the XA-Core shelf.

NT9X13NB (continued)

Functional blocks

The NT9X13NB has the following functional blocks:

- MC68020 CPU
- memory access unit (MAU)
- memory controller (MEM) and memory array
- maintenance, timing, and control (MTC)
- matcher (MCH)

The relationship between the functional blocks appear in the following figure.

NT9X13NB functional blocks

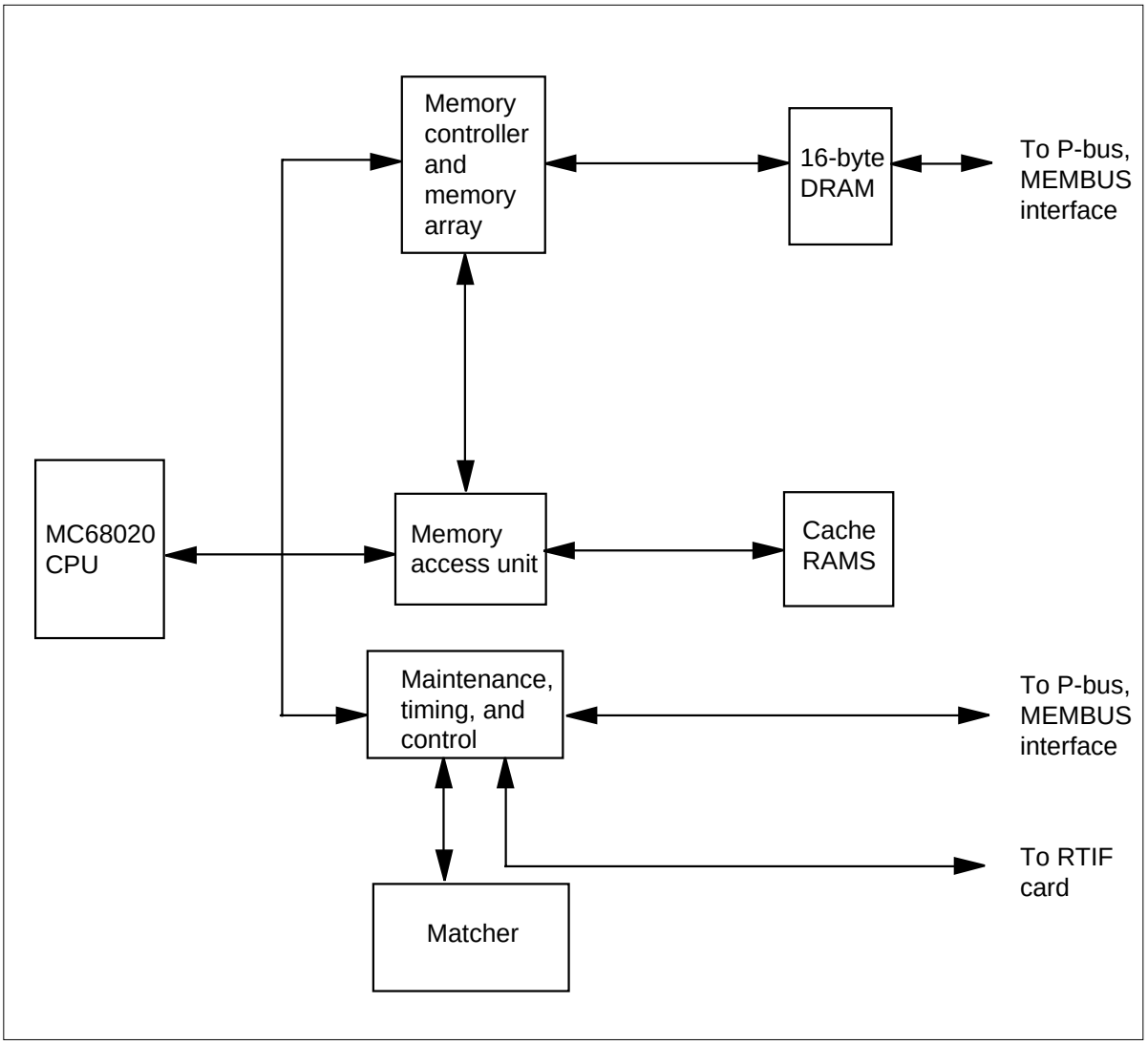

68020 central processing unit

The Motorola 16 MHz MC68020 CPU is the first 32-bit external bus implementation of the MC68000 family of Motorola microprocessors. The CPU provides improved performance over earlier versions. The following resources are available:

- sixteen 32-bit general purpose address and data registers
- two 32-bit supervisor stack points
- a 32-bit program counter
- five special purpose control registers
- 4 Gbyte direct address range
- 18 addressing modes
- memory mapped I/O
- high performance on chip 256 kbyte instruction cache
- 32-bit upgraded and current instructions
- operations on seven data types

To improve performance and function, the CPU also has the following hardware features:

- multiple micro-engines for a very efficient concurrent pipeline operation
- high performance 32-bit barrel shifter in ALU
- dynamic bus sizing
- coprocessor interface

Memory access unit (MAU)

The MAU controls a data cache and provides address space access protection in 64 kbyte blocks. The MAU starts a parity protection scheme on bus accesses and the data cache. The MAU supplies the necessary control signals for the extended multiprocessor system (XMS) P-bus specification and the SuperNode CM/MEM memory bus specification.

Memory controller (MEM) and memory array

The memory module uses a 4 Mbit DRAM in a 16 Mbyte memory bank. The memory controller operates in the 32-bit environment, corrects any single data errors, and detects double or multiple errors.

Maintenance, timing, and control (MTC)

The MTC interfaces with the CPU. The MTC provides the CPU with basic signals. The signals include clock, reset, and chip selects to the associated

NT9X13NB (end)

EPROM and other peripheral modules. The MTC includes an interval timer that can be in a number of modes, and a sanity timer. Interrupts from different sources are latched, encoded and passed to the processor at a fixed priority. Maintenance circuits latch system fault detections so that the CPU can read, write or clear the detections.

The MTP provides the interface to the SCC for reset terminal interface (RTIF) communications. In duplex operation, the MTC provides clock detection and selection. The MTC also provides a serial FIR to obtain information about the mate system clock and control signals. This action allows the CPU that requests to get information from a mate that is not operational.

Matcher (MCH)

Matcher performs the following functions.

- It maintains a hardware lock on the address hold register and unlocks by recovery-diagnostic software after fault detection.
- It provides a 32-bit maintenance control register in which the data bus can write. The mate CPU can read this register with a signal the CPU supplies. The signal laces the mate communication register (MCR) on the operational measurements (OM) bus.

Technical data

Power requirements

The NT9X13NB requires +5V, + or - 5%.

NT9X17AD

Product description

The NT9X17AD message switch (MS) four-port card provides a data path for messaging between the MS and four external links. The NT9X17AD is the same circuit card as the NT9X17AA with firmware, hardware and pin location changes.

The firmware is updated to provide compatibility with the NT9X62BA SR512 paddle board and the NT9X63AA message switch two-port ATM paddle board. The PROM for the firmware increases from 8 kbytes to 32 kbytes to allow for additional expansion.

Hardware is added to the NT9X17AD to allow the card to support both the NT9X62BA paddle board and the NT9X63AA paddle board. These paddle boards operate in one of the following configurations:

- 4 ports that operate at the SR128 rate
- 2 ports that operate at the SR256 rate
- 1 port that operates at the SR512 rate

The system clock C61 pin changes from pin 25A to pin 90D. This change allows the pack to function with the NT9X62BA. Pin 25A is now grounded to provide a mode pin for the NT9X62BA for link timing purposes.

The NT9X17AD uses the N04C single port bus access circuit (BAC).

The NT9X17AD is backward compatible with the NT9X17AA. All current applications use the NT9X17AD.

Location

The NT9X17AD card fits in slots 12 to 31 in all MS shelves of SuperNode. This card also fits in slots 8, 9, 29 and 30 of local message switch (LMS) shelves.

Functional description

The NT9X17AD transfers messages between four data links and the transaction bus (T-bus). The T-bus is a packet switch. The packet switch connects data links to any port on the MS or to the message switch processor (MSP).

NT9X17AD (continued)

The links can be one of the following physical types:

- DS30
- DS512
- SR512

The links can be one of the following logical types:

- DS30
- DMS-X
- DMS-Y
- Framer

The NT9X17AD reports the status of the links and link data transfers the MSP.

Functional blocks

The NT9X17AD has the following functional blocks:

- card maintenance unit (CMU)
- connection memory (CM)
- bus access circuit (BAC)
- buffer
- link handler (LH)
- access control
- bus drivers and receivers
- first-in first-out (FIFO) memory
- FIFO memory interface

The relationship between the functional blocks appears in the following figure.

NT9X17AD (continued)

NT9X17AD functional blocks

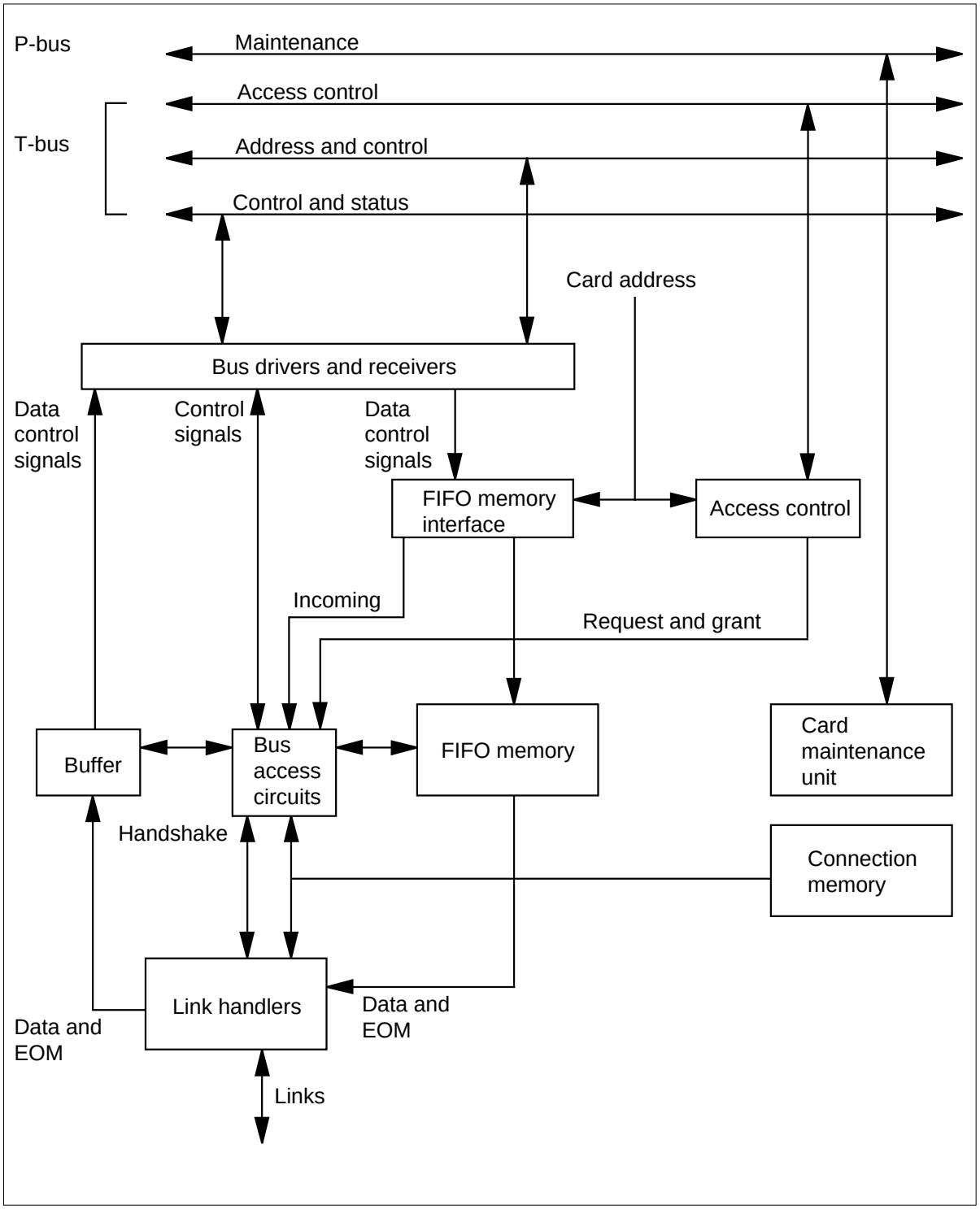

NT9X17AD (continued)

Card maintenance unit

The CMU monitors and reports error conditions. The CMU configures the card, gate arrays and the connection memory. The CMU is an on-card processor that the MSP uses to perform tasks quickly and easily.

The CMU is based on an 8031 microcontroller. The CMU connects to two buses. The CMU connects a synchronous bus to the programmable ROM and data RAM of the CMU. The CMU also connects to the processor bus (P-bus). The MSP controls the P-bus.

Connection memory

The connection memory is a RAM that keeps count of the current channel in the frame. This count allows the ports on the card to correspond to the link bandwidth of the channel. The CMU updates the RAM locations.

Bus access circuit

The BAC gate array provides temporary storage of messages. The BAC stores messages between the time the messages arrive on the link and the time these messages switch to the T-bus. When the message moves from the link to the T-bus, a buffer stores the message. When the message moves from the T-bus to the link, a FIFO stores the message. The BAC handles most of the T-bus protocol. The arbitrator handles some aspects of T-bus protocol.

Buffer

The buffer is a 16-KByte block of static RAM. This buffer stores data that comes from the link through the LH. The BAC transmits the data to the T-bus. The BAC supplies the address and chip selection for the memory.

Link handler

The LH is the interface between the link data protocol and the rest of the MS. The LH handles all the protocol of the link. The LH checks and generates the cyclic redundancy check (CRC) or checksum when necessary.

Access control

The BAC provides the access control to read from and write to the buffer memory and the FIFO memory. This control includes addresses, chip selection and different control signals.

Bus drivers and receivers

The bus drivers and receivers latch data and control the direction of the data transfer.

NT9X17AD (end)

First-in first-out memory

The FIFO memory block stores incoming data from the T-bus. The LH reads the data and transmits the data to the link.

FIFO memory interface

The FIFO memory interface is a RAM-implemented circular buffer. This interface receives data from the T-bus and transfers the data to the link. The BAC provides the addresses for the memory.

Signaling

All signals on the NT9X17AD use standard transistor-transistor-logic (TTL) voltage levels.

Technical data

Power requirements

The NT9X17AD requires a voltage of +5V and 3A of current.

This page is left blank intentionally.

NT9X63AA/AB

Product description

The NT9X63AA/AB message switch OC-3 (Optical Carrier) two-port interface paddle board provides the core to message switch interconnect (CMIC) link between the Message Switch shelf and the XA Core shelf.

The NT9X63AA was last supported in CSP13, and its manufacture was discontinued as of March 31, 2000.

The paddle board installs into each of the two Message Switch shelves (plane 0 and plane 1) of the SuperNode cabinet as a replacement for the NT9X20AA DS512 paddle board. The paddle board installs into the Message Switch shelf of the SuperNode SE cabinet as a replacement for the NT9X62CA DS512 paddle board.

The paddle board connects through the Message Switch backplane to the NT9X17AD Message Switch four-port card installed in the Message Switch shelf.

The Paddle Board connects through fiber optic cable to the NTLX05AA/AB XA Core OC-3 two-port interface packlet of the NTLX03AA/AB input/output processor (IOP) pack installed in the XA Core shelf.

The signal protocol used between the paddle board and the NT9X17AD Message Switch four-port card is DMS-Y protocol. Accordingly, the paddle board terminates the RDEP protocol signal from the OC-3 link and generates a DMS-Y protocol signal on the Message Switch backplane S-bus that connects the paddle board to the Message Switch four-port card.

The paddle board provides a pair of ATM (asynchronous transfer mode) over SONET OC-3 links, used as the CMIC links to the XA-Core. These links use the following protocols:

- the ATM physical layer according to the ATM Forum User Network Interface Specification and ITU-T Recommendation I.432
- the ATM Adaptation Layer Type 5 (AAL-5) for Broadband ISDN according to ITU-T Recommendation I.363

NT9X63AA/AB (continued)

The features of the NT9X63AA/AB paddle board are as follows:

- termination of a pair of SONET OC-3 links
- optical to electrical signal conversion (OC-3C to STS-3C)
- termination of the ATM layer
- termination of the AAL5 Segmentation and Reassembly Sublayer
- generation of a DMS-Y link to the NT9X17AD Message Switch four-port card
- generation of a dedicated channel that contains time of day (TOD) synchronization information
- the reception and re-transmission of out of band (OOB) messages
- provision of reset logic for the board

Location

The paddle board installs into each of the two Message Switch shelves (plane 0 and plane 1) of the SuperNode cabinet as a replacement for and in the same slot positions as the NT9X20AA DS512 Paddle Board.

The paddle board installs into the Message Switch shelf of the SuperNode SE cabinet as a replacement for and in the same slot positions as the NT9X62CA DS512 Paddle Board.

NT9X63AA/AB (continued)

Layout

The following figure shows the external appearance of the Message Switch OC-3 two-port interface paddle board.

NT9X63AA/AB

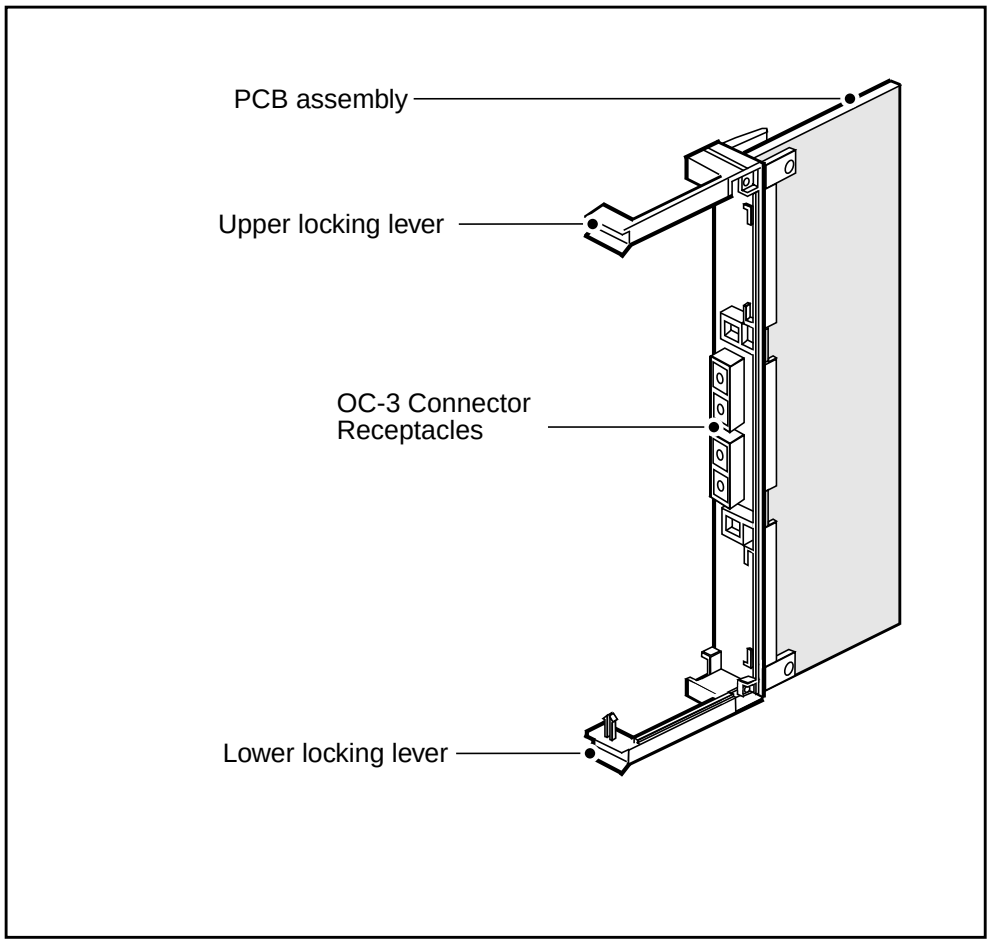

Functional description

The message switch OC-3 two-port interface paddle board provides a duplicated SONET OC-3 optical fiber link. This link provides the core to message switch interconnect (CMIC) link between the Message Switch shelf and the XA Core shelf.

The Paddle Board connects through multi-mode fiber optic cable to the NTLX05AA/AB XA Core OC-3 CMIC packlet of the NTLX03AA/AB input/output processor (IOP) pack installed in the XA Core shelf.

NT9X63AA/AB (continued)

In the outgoing (transmit) direction, DMS-Y protocol signals output from a transmit buffer on the Message Switch NT9X17AD port card through the SBUS are received by a multi-port link handler (MPLH). The MPLH converts the DMS-Y protocol signals to serial signals, which are then output through a I/F buffer link to a multi-port link handler to local bus interface chip (MLIC). The MLIC outputs the serial signals through the local bus to a transmit buffer in an Intel i960 microprocessor's on-board synchronous static random access memory (S-SRAM). The LASAR device constantly monitors the state of the transmit buffers. When signals appear in the buffers, the LASAR reads them and then segments them into a synchronous transport signal (STS-3C) message packet. The STS-3C message packet is output to an optical transceiver. The transmitter section of the optical transceiver converts the electrical STS-3C signals to optical carrier (OC-3) signals which are then transmitted through the fiber optic cable to the NTLX05AA/BA XA Core OC-3C two-port interface packlet.

In the incoming (receive) direction, ATM over SONET OC-C message packet signals are received from the NTLX05AA/AB XA Core OC-3 two-port interface packlet by an optical transceiver. The receiver section of the optical transceiver converts the SONET OC-3 optical signals to SONET STS-3C electrical signals which are then output to a LASAR. The LASAR reassembles the message packet received from the optical transceiver and outputs the resulting signals through the PCI bus and the local bus directly to a receive buffer in the Intel i906 microprocessor's on-board S-SRAM. The microprocessor then informs the MLIC, by a write pointer update, that there are signals in the MLIC receive buffer. Upon receiving the pointer update, the MLIC reads out the serial signals from the buffer and outputs them through the buffer I/F to the MPLH. The MPLH converts the signals to DMS-Y protocol signals, checks parity, and then outputs the DMS-Y protocol signals through the SBUS to a receive buffer on the Message Switch NT9X17AD port card.

Functional blocks

The paddle board includes the following functional blocks:

- Optical transceiver
- LASAR semi-conductor
- 19.44 MHz Oscillator
- Intel i960 microprocessor
- FLASH memory
- S-SRAM
- MLIC field programmable gate array (FPGA)
- MPLH semi-custom gate array

NT9X63AA/AB (continued)

- JABBA field programmable gate array (FPGA)
- Clock subsystem
- Power subsystem

The following figure shows the relationship between the functional blocks.

NT9X63AA/AB functional blocks

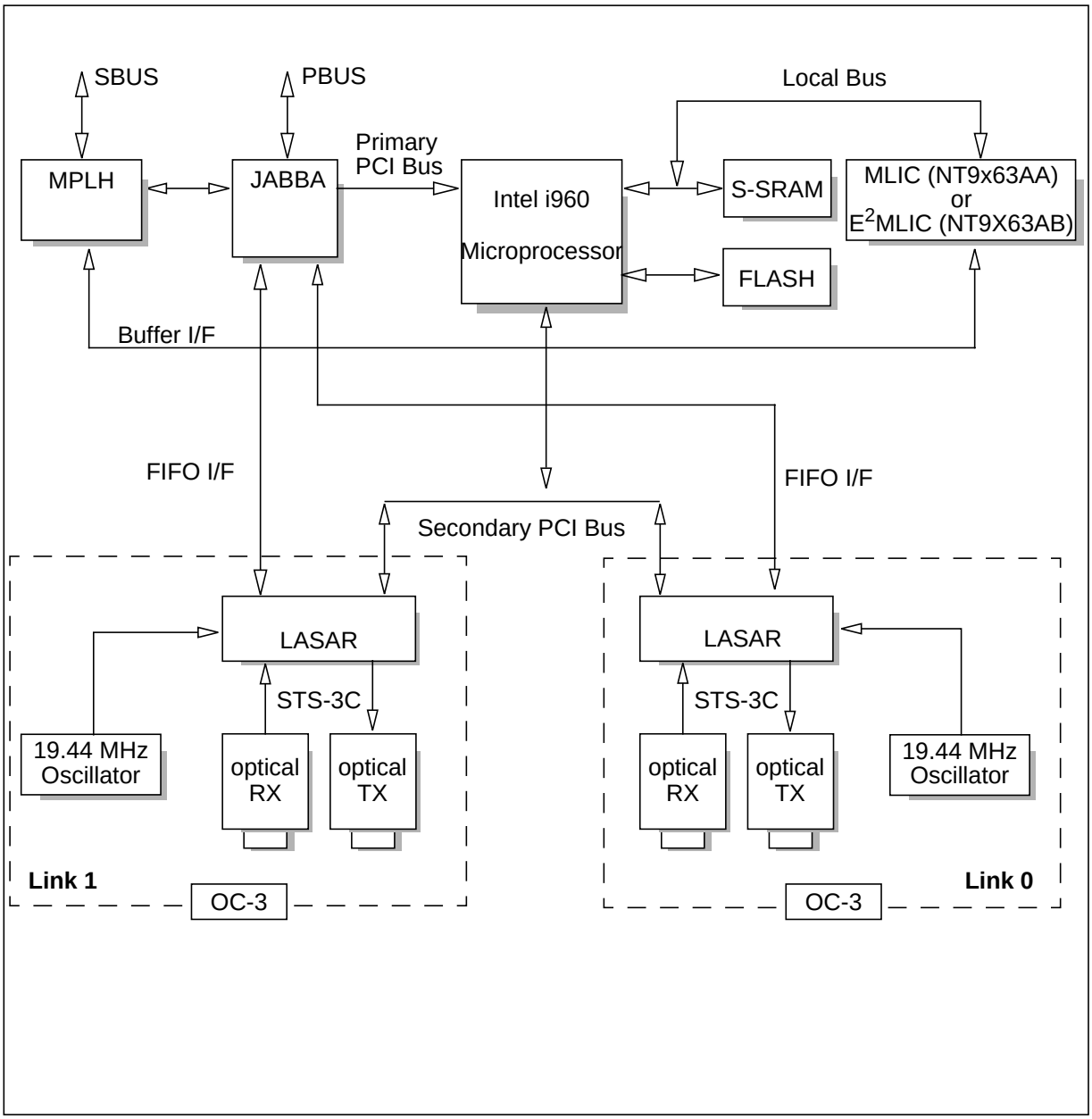

NT9X63AA/AB (continued)

Optical transceivers

The optical interface is provided by a pair of Hewlett Packard HFBR-5205 155.52 Mbit/s multimode fiber transceivers. The HFBR-5205 transceiver provides a SONET OC-3 link for distances up to 2000 m using 62.5/125 mm diameter multimode fiber optic cable.

The receiver section of the optical transceiver converts SONET OC-3 optical signals to SONET STS-3 electrical signals which are then output to the LASAR. The transmitter section of the optical transceiver converts SONET STS-3 electrical signals generated by the LASAR to SONET OC-3 optical signals which are then transmitted into the fiber optic cable.

The receiver section of the optical transceiver uses a PIN photodiode coupled to a custom silicon transimpedance preamplifier integrated circuit (IC) to receive the optical signal from the fiber optic cable. The PIN photodiode/preamplifier IC combination is coupled to a quantizer IC which provides the final pulse shaping for the PECL level logic signals output to the LASAR.

The transmitter section of the optical transceiver uses a 1300 nanometer infrared light emitting diode (LED) to transmit the optical signal into the fiber optic cable. The LED is driven by a custom silicon integrated circuit (IC) which converts differential PECL level logic signals into an analog LED drive current.

LASAR

The local asynchronous transfer mode segmentation and reassembly (LASAR) device is an integrated semi-conductor using low power, +5 volt CMOS technology.

The LASAR combines a physical layer (PHY) processor, an asynchronous transfer mode adaptation layer type 5 segmentation and reassembly sublayer (AAL5-SAR) processor, and a peripheral component interconnect (PCI) direct memory access (DMA) controller on a single chip.

The PHY processor provides the PECL level SONET STS-3C transmit and receive links used to connect the LASAR to the optical transceivers. The PHY processor provides the peripheral component interconnect (PCI) interface between the LASAR and synchronous static random access memory (S-SRAM). The PHY processor also provides the first in/first out (FI/FO) link used to connect the LASAR to the JABBA field programmable gate array (FPGA).

The AAL5-SAR processor reassembles the message packet received from the optical transceiver and outputs the resulting signals through the PCI bus and

local bus directly to the Intel i906 microprocessor's on-board synchronous static random access memory (S-SRAM).

The AAL5-SAR processor segments the signals output by the Intel i960 microprocessor through the PCI bus into a message packet and outputs the packet to the optical transceiver.

The PCI DMA controller manages the transfer of signals between the AAL5-SAR processor and S-SRAM independent of the Intel i960 microprocessor core.

19.44 MHz oscillator

In order to generate the STS-3C electronic transmission rate, the LASAR requires a clock reference of 19.44 MHz. Each LASAR requires a 19.44 MHz clock for its transmit clock as well as its receive clock. Since the drive capability of a single oscillator is not sufficient to drive the required load of both LASARs, two 19.44 MHz crystal oscillators are used, one for each LASAR.

i960 microprocessor

The i960 33MHz microprocessor integrates the functionality required to create an intelligent peripheral component interconnect (PCI) input/output (I/O) subsystem. The primary task of the microprocessor is to direct memory access in and out of the synchronous static random access memory (S-SRAM).

The microprocessor fetches its code from FLASH memory upon bootup and uses the S-SRAM as code space and data store during regular operation.

The i960 microprocessor core is the Intel i960 JF processor. Integrated around the i960 JF processor core are the following peripherals required to complete the requirements of an intelligent PCI I/O subsystem:

- a pair of address translation units (ATUs) used to provide direct access between the PCI buses (primary and secondary) and the local bus
- a messaging unit (MU) used to provide the mechanism required to transfer signals between the PCI buses and the microprocessor
- a set of four bus arbitration units used to provide the arbitrator logic control which controls bus mastership of the PCI buses and the local bus
- a direct memory access (DMA) controller used to provide the high transfers between the PCI buses and the microprocessor's on board synchronous static random access memory (S-SRAM)

NT9X63AA/AB (continued)

- an integrated memory controller (MC) used to provide a direct connection between the microprocessor and the S-SRAM and FLASH memories
- an input/output (I/O) advanced programmable interrupt controller (APIC) used to provide intelligent handling of PCI device interrupts by first filtering the interrupts and then selectively performing the interrupt processing

In the outgoing (transmit) direction, the serial signals output by the MPLH through the buffer I/F to the MLIC are output by the MLIC through the local bus to a transmit buffer in the microprocessor's on-board S-SRAM.

In the incoming (receive) direction, the RDEP signals output by LASAR through the PCI bus are transferred directly through the local bus to a receive buffer in S-SRAM. The microprocessor informs the, by a write pointer update, that there are signals in the receive buffer.

FLASH memory

The FLASH memory is a 1M x 8 bit non-volatile memory configured as two independent memory banks of 512K x 8 bit. Each memory bank contains all the code and static data structures for the Intel i960 microprocessor. This allows the Intel i960 microprocessor to execute out of one FLASH memory bank while the second is being updated.

In order to benefit from faster access times, much of the code is copied from FLASH memory to the S-SRAM by the microprocessor on bootup or reset, so that all subsequent code and data fetches will be from the S-SRAM.

S-SRAM

The synchronous static random access memory (S-SRAM) is a 128K x 36 bit synchronous static random access memory ball grid array (BGA) device which permits parity checking.

The S-SRAM is used to store code for the Intel i960 microprocessor. This code is copied from FLASH memory to the S-SRAM by the microprocessor on bootup or reset so that all subsequent code and data fetches will be from the S-SRAM. This allows the microprocessor to benefit from faster access times relative to execution out of FLASH memory.

The S-SRAM is also used to provide MLIC transmit and receive buffers as well as LASAR transmit buffers. The MLIC serves as the memory controller for the S-SRAM and performs the necessary parity verification.

NT9X63AA/AB (continued)

MLIC

The Multi-port link handler to local bus interface chip (MLIC) is a field programmable gate array (FPGA) which acts as a buffer manager for the multi-link port handler (MPLH) as well as a direct memory access (DMA) controller for the Intel i960 microprocessor synchronous static random access memory (S-SRAM).

The MLIC (rather than the very high speed Intel i960 microprocessor) buffers the exchange of signals between the MPLH and the S-SRAM so that the Intel i960 microprocessor can control message flow with maximum efficiency.

The MLIC DMA controller transfers signals from the transmit buffers in S-SRAM for outgoing signals and transfers signals to the receive buffers in S-SRAM for incoming signals. The DMA controller requests access to the S-SRAM from the Intel i960 microprocessor and waits until the request is granted in order to access S-SRAM.

In the outgoing (transmit) direction, the serial signals output by the MPLH through the buffer I/F to the MLIC are output by the MLIC through the local bus to a MLIC transmit buffer in S-SRAM.

In the incoming (receive) direction, the signals output by the LASAR through the PCI bus are transferred directly through the local bus to a MLIC receive buffer in S-SRAM. The microprocessor then informs the MLIC, by a write pointer update, that there are signals in the MLIC receive buffer. Upon receiving the pointer update, the MLIC reads out the serial signals from the buffer and outputs them through the buffer I/F to the MPLH.

The NT9X63AB incorporates the enhanced enhanced MLIC (E^2MLIC), which improves message-switch-to-core message throughput.

MPLH

The multi-port link handler (MPLH) is a semi-custom gate array which acts as a DMS-Y protocol converter. All MPLH operations are synchronized to the 4.096 MHz Message Switch system clock.

In the outgoing (transmit) direction, DMS-Y protocol signals output from a transmit buffer on the Message Switch NT9X17AD port card through the SBUS are received by the MPLH. The MPLH converts the DMS-Y protocol signals to serial signals, which are then output through the I/F buffer to the MLIC.

In the incoming (receive) direction, the MPLH receives signals through the I/F buffer from the MLIC. The MPLH converts the signals to DMS-Y protocol

NT9X63AA/AB (continued)

signals, checks parity, and then outputs the DMS-Y protocol signals through the SBUS to a receive buffer on the Message Switch NT9X17AD port card.

JABBA

The JABBA is a field programmable gate array (FPGA) which maintains a baseline time of day (TOD) counter which is used to synchronize the internal events in the XA Core shelf with those in the Message Switch. The TOD counter operates off a 16.384 MHz clock signal received from the backplane of the Message Switch. The JABBA will periodically generate frozen digital time signals which are output to the LASAR. The LASAR segments the digital time signals into a TOD message packet and outputs the packet to the optical transceiver, which transmits the packet through the OC-3 link to the VADER on the XA Core OC-3 two-port interface packlet. Using the frozen digital time as a reference, an update is performed on the VADER to synchronize the VADER TOD with the JABBA TOD.

The JABBA also handles out of band (OOB) signals generated by the VADER on the XA Core OC-3 two-port interface packlet. The OOB signals generated by the VADER are sent through the OC-3C link as an OOB message packet to the optical transceiver, where they are converted into STS-3C electrical signals. The OOB message packet is then output to the LASAR, which reassembles the packlet and outputs the resulting OOB signals through the FI/FO interface to the JABBA. The OOB signals received by the JABBA are first checked to make sure that they are error free. Error free OOB signals are then output by the JABBA through a dedicated serial line of the PBUS to the remote terminal interface (RTIF) of the Message Switch.

The JABBA includes the identification (ID) programmable read only memory (PROM) chip. The ID PROM follows the standardized DMS100 format used by all cards. The PROM contains information identifying product engineering code (PEC), release, serial number, manufacturing date, format, operating parameters, and checksum.

The JABBA provides the peripheral component interconnect (PCI) interface between the MPLH and the Intel i960 microprocessor. Configuration, synchronization, and monitoring of the MPLH by the microprocessor is performed over this PCI interface.

The JABBA also provides the peripheral component interconnect (PCI) to PBUS link. This link is used to download updates to the Intel i960 microprocessor code and static data structures. The updates are initially stored in FLASH memory and then transferred, by the microprocessor, into S-SRAM.

The JABBA provides reset management for the paddle board. The paddle board implements two levels of reset severity: power up reset and soft reset. Power up resets perform structural tests, completely initialize all the components on the paddle board, and begin execution of each component's firmware. Soft resets preserve the current contents of all random access memories as well as control and status information. A soft reset re-initializes selective components on the paddle board, and begins execution of those components' firmware.

A power up reset request can originate from the low voltage supervisor or as a result of the 3.3 Vdc input/output pin of the JABBA being pulled low, indicating that the 3.3 Vdc power supply has fallen below the threshold level. A soft reset request can originate from the Intel i960 microprocessor, the MLIC, the LASAR, or the JABBA itself. Soft reset requests are generated when the built in self test (BIST) of the component identifies a fault.

When a power up reset request is received by the JABBA, the JABBA first performs a power up reset on itself and then generates a power up reset command which is output through the PCI bus to the MPLH, the Intel i960 microprocessor, and then through the local bus to the MLIC.

When a soft reset request is received by the JABBA, the JABBA will generate a soft reset command which is output through the PCI bus to the Intel i960 microprocessor, the MPLH, and the MLIC.

Clock subsystem

The clock subsystem provides stable clock signals to the components on the paddle board. A 33 MHz crystal oscillator on the Intel i960 microprocessor provides the clock signal for the microprocessor. The 33 MHz clock signal generated by the crystal oscillator is applied to a low voltage CMOS phase lock loop (PLL) clock driver. The clock driver drives a 33 MHz clock signal through the local bus to the S-SRAM and the MLIC, as well as through the PCI bus to the JABBA and the LASAR.

A 16.384 MHz clock signal derived from the backplane of the Message Switch is fed through an octal buffer/line driver and driven through the SBus to the MPLH. This provides the 16.384 MHz clock signal required by the MPLH. The 16.384 MHz clock signal is also output through the PCI bus to the JABBA. This provides the 16.384 MHz clock signal required by the time of day (TOD) circuit on the JABBA.

A 4.096 MHz clock signal derived from the backplane of the Message Switch is fed through an octal buffer/line driver and driven through the SBus to the MPLH. This provides the 4.096 MHz clock signal required by the MPLH.

NT9X63AA/AB (end)

Power subsystem

The paddle board employes a mixed voltage design requiring 5 Vdc and 3.3 Vdc power. The 5 Vdc power is fed directly from the message switch backplane. This power feeds the optical transceivers, the LASAR, the MPLH, and the JABBA.

The 5 Vdc power fed in from the backplane is applied to a 3.3 Vdc passive linear regulator on the paddle board, which steps the voltage down from 5 Vdc to 3.3 Vdc. This power feeds the Intel i960 microprocessor, the S-SRAM, the FLASH memory, and the MLIC.

The paddle board is protected from large power surges by a 7A fuse. It also has a low voltage supervisor circuit on the 5 Vdc power feed. If the circuit detects that the power feed has decreased to below 3.6 Vdc, the circuit generates a power up reset signal for the board.

The paddle board can detect an absence of 3.3 Vdc power. A 3.3 Vdc power feed is applied to a special JABBA input/output pin. If the power feed drops below 3.2 Vdc, the pin in pulled low, indicating that the 3.3 Vdc power supply has fallen below the threshold level. The JABBA will then generate a power up reset signal for the board.

Technical data

This section describes the technical specifications for the NT9X63AA/AB message switch OC-3 two-port interface paddle board. The specifications include power requirements and technology.

Power requirements

The maximum total power consumption for the paddle board is estimated at 24 W. A 7-A fuse protects the paddle board from large power surges.

Technology

The NT9X63AA/AB uses surface mount technology where possible. The connectors use through-hole technology. Most discrete components, including capacitors and resistors, are installed on the secondary side. The paddle board is an eight layer printed circuit board employing epoxy-fiberglass (FR4) material.

NTLX0101

Product description

The XA-Core shelf assembly is packaged in the SuperNode, SuperNode SE, and SuperNode Extension stand-alone cabinet. The shelf assembly is dimensioned to fit within the standard shelf space of the SuperNode C42 cabinet. The shelf assembly is always positioned in the lowest shelf position in the cabinet.

From the front, The XA-Core shelf assembly slides on the shelf support brackets of the SuperNode C42 cabinet and is secured with four screws. The shelf is not the same in appearance to that of other SuperNode shelves, but is identical in color.

The components within the XA-Core shelf provide the computing and data storage resources required to perform all call processing and network management functions, including digit translation, billing, and network routing. The XA-Core shelf has been created to directly replace the current SuperNode computing module (CM) and system load module (SLM) shelves.

The XA-Core shelf assembly houses all XA-Core circuit packs. Each circuit pack connects to the XA-Core midplane assembly which runs down the center of the shelf. Accordingly, the shelf assembly has two sides, a front (primary) side and a back (secondary) side. The front side houses circuit packs which do not require cabling. The back side houses circuit packs which may require cabling.

Layout

The following figure shows the configuration of the XA-Core shelf assembly.

NTLX0101 (end)

NTLX0101

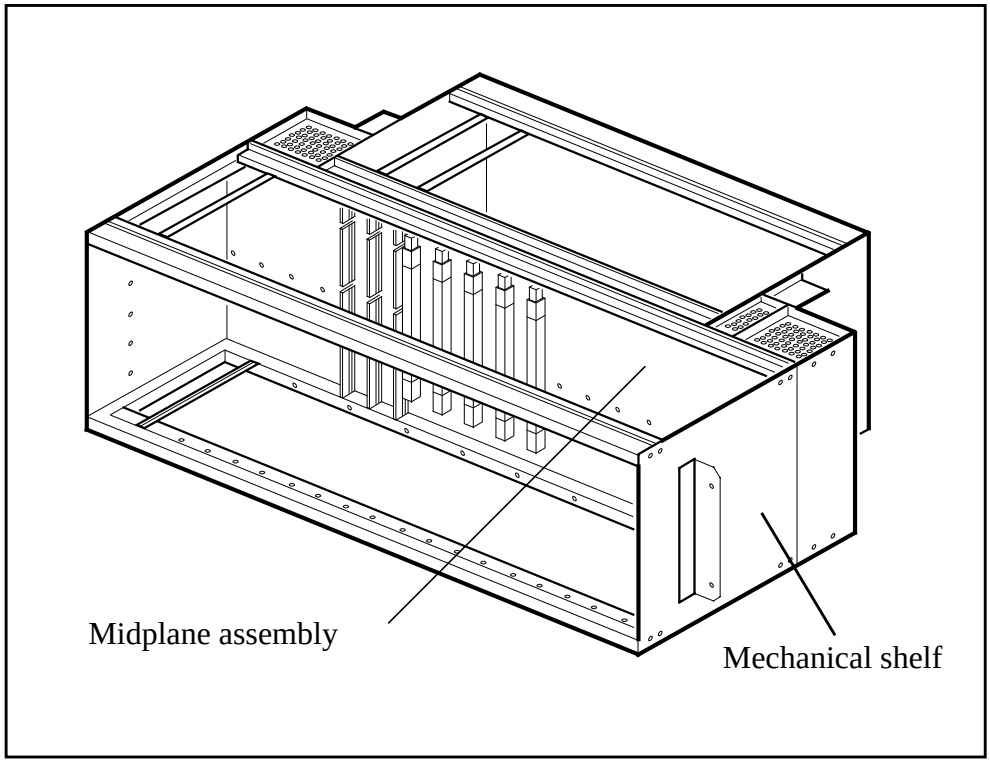

Midplane assembly

The NTLX0102 midplane assembly provides XA-Core circuit pack to circuit pack high speed interconnection. Circuit packs connect to the midplane through vertical slot connectors located on both the primary (front) side and secondary (back) side of the midplane.

Circuit packs and packlets

For information on the circuit packs and packlets in the shelf, see the other sections of this chapter.

Configurations

The XA-Core shelf assembly can be configured for a SuperNode, a SuperNode SE, or for an XA-Core Extension cabinet.

For information on XA-Core configurations, see the section titled "XA-Core shelf design" in Chapter 1 in this document.

NTLX01AA

Product description

The XA-Core SuperNode cabinet contains a frame supervisory panel (FSP), two message switch (MS) shelves, one filler shelf, a standard XA-Core shelf, and a high capacity cooling unit.

Layout

The following figure shows the configuration of the XA-Core SuperNode cabinet.

NTLX01AA

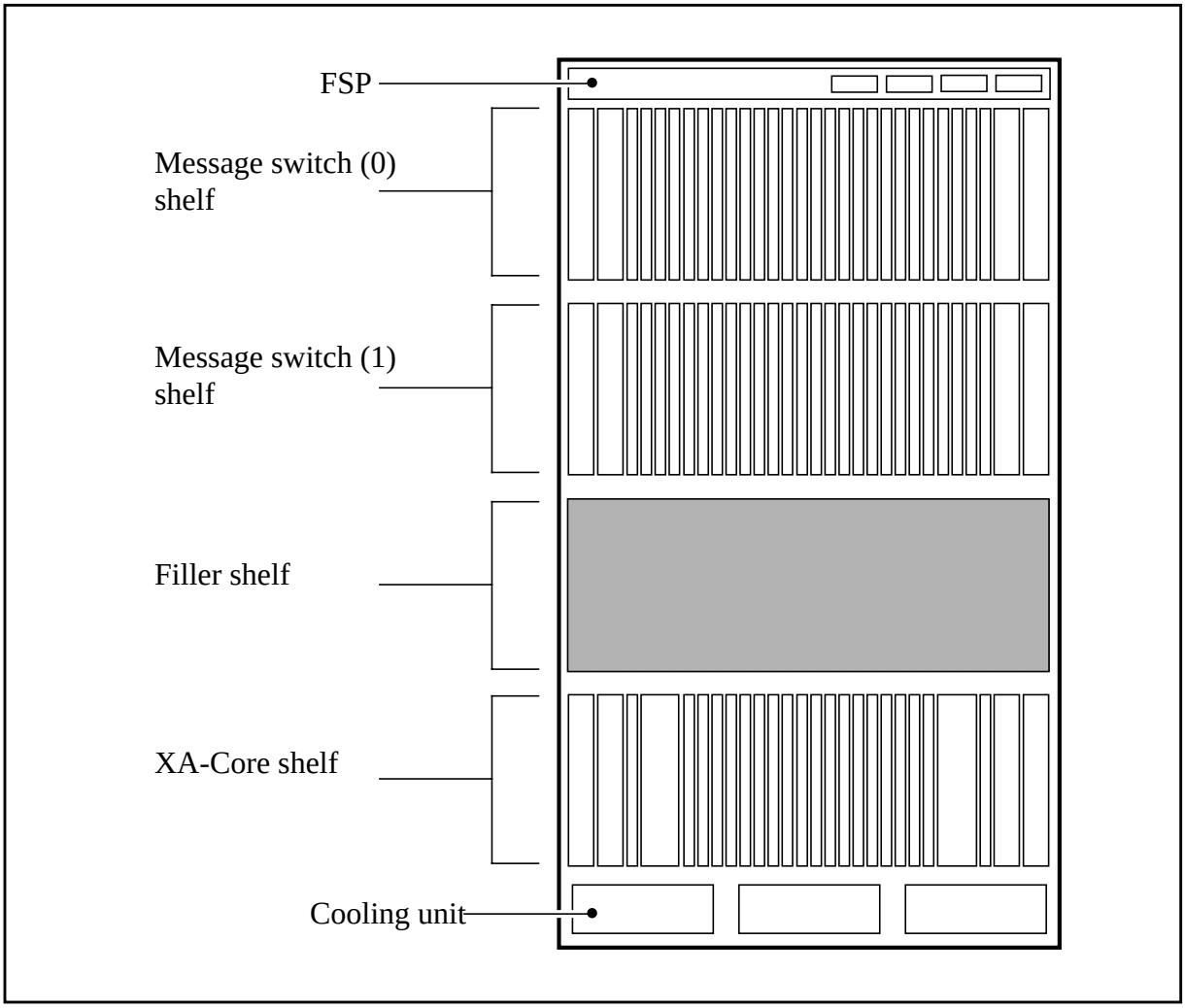

NTLX01AA (continued)

Components

The cabinet contains the following components:

Qty	PEC	Description	Provisioning Rule
1	NT9X03AA	Frame supervisory panel	48V Office
1	NT9X03BA	Frame supervisory panel	60V Office
2	NT9X0440	Message switch	Always provided
1	NT0X24BD	Filler shelf assembly	Always provided
1	NTLX0101	XA-Core shelf assembly	Always provided
1	NTLX10AA	High capacity cooling unit	Always provided

Frame supervisory panel

The frame supervisory panel (FSP) performs supervisory, alarm, and maintenance functions. The FSP installs in the top shelf position of the cabinet.

Message switch shelf

The message switch (MS) shelf concentrates and distributes all internal messages flowing into and out of the XA-Core shelf.

The pair of message switches operate in load sharing mode so that either message switch can continue operating alone on a full message load without message loss or service degradation. This arrangement ensures system reliability.

Filler shelf assembly

The filler shelf assembly is required to sustain air flow and thermal dissipation within the cabinet.

XA-Core shelf

The XA-Core shelf provides the computing and data storage resources required to perform all call processing and network management functions, including digit translation, billing, and network routing. The XA-Core shelf has been created to directly replace the current SuperNode computing module (CM) and system load module (SLM) shelves.

NTLX01AA (end)

High capacity cooling unit

The high capacity cooling unit includes three fan modules and a high-efficiency fiber air filter. The fans pull cool air into the base of the cabinet and force it through the filter. The filtered air circulates through each card module and exits out the top of the cabinet. Each fan module installs in its own drawer.

This page is left blank intentionally.

NTLX01BA

Product description

The XA-Core SuperNode SE cabinet contains a frame supervisory panel (FSP), a message switch (MS) shelf, a link interface shelf (LIS), an enhanced network (ENET) shelf, a standard XA-Core shelf, and a high capacity cooling unit.

Layout

The following figure shows the configuration of the XA-Core SuperNode SE cabinet.

NTLX01BA

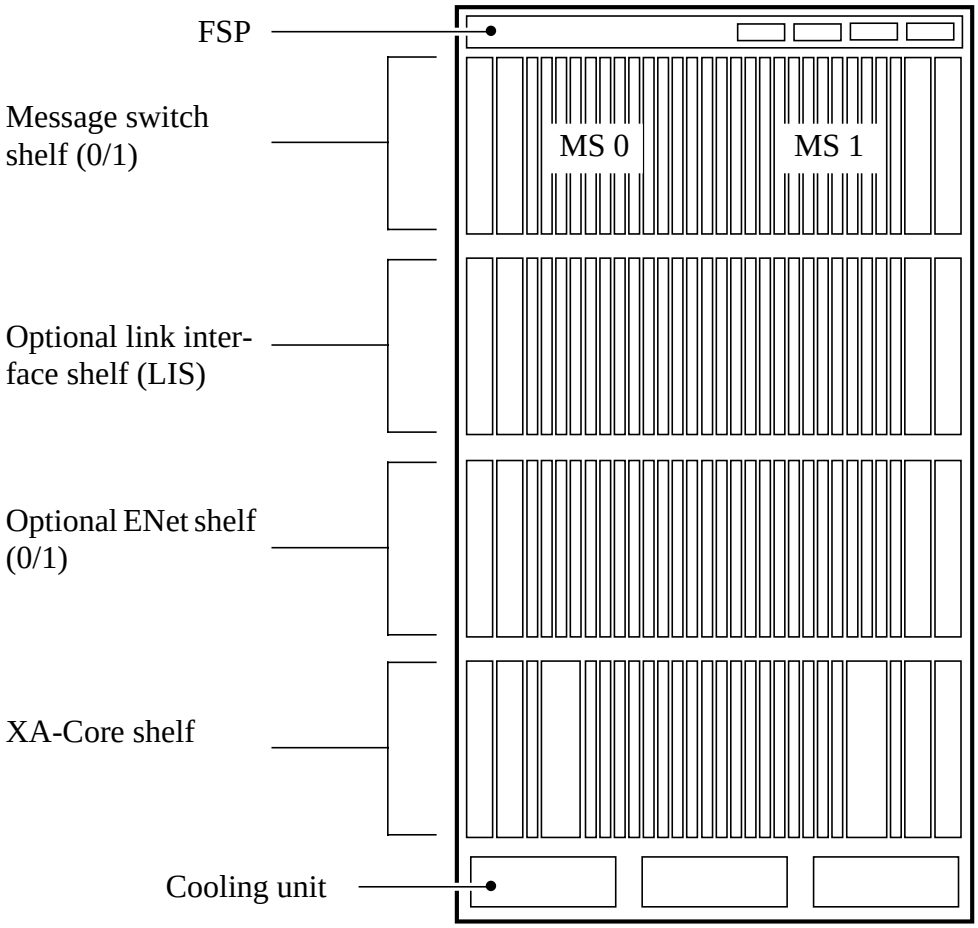

NTLX01BA (continued)

Components

The cabinet contains the following components:

Qty	PEC	Description	Provisioning Rule
1	NT9X03AA	Frame supervisory panel	48V Office
1	NT9X03BA	Frame supervisory panel	60V Office
1	NT9X0470	Message switch shelf	Always provided
1	NT9X7204	link interface shelf	As required
1	NT9X0810	ENET shelf	As required
1	NTLX0101	XA-Core shelf	Always provided
1	NTLX10AA	High capacity cooling unit	Always provided

Frame supervisory panel

The frame supervisory panel (FSP) performs supervisory, alarm, and maintenance functions. The FSP installs in the top shelf position of the cabinet.

Message switch shelf

The message switch (MS) shelf concentrates and distributes all internal messages flowing into and out of the XA-Core shelf, each enhanced network (ENET) shelf, and each link interface shelf (LIS).

Internally, the message switch (MS) shelf contains two planes. The pair of MS planes operate in load sharing mode so that either plane can continue operating alone on a full message load without message loss or service degradation. This arrangement ensures system reliability.

Link interface shelf

The link interface shelf (LIS) provides both multi-application platform and common channel signaling 7 (CCS7) connections into and out of the message switch (MS) shelf.

Enhanced network shelf

The enhanced network (ENET) shelf provides high speed modulated voice and data connections into and out of the message switch (MS) shelf.

Internally, the enhanced network (ENET) shelf contains two planes. The pair of ENET planes operate in load sharing mode so that either plane can continue operating alone on a full message load without message loss or service degradation. This arrangement ensures system reliability.

XA-Core shelf

The XA-Core shelf provides the computing and data storage resources required to perform all call processing and network management functions, including digit translation, billing, and network routing. The XA-Core shelf has been created to directly replace the current SuperNode SE computing module (CM) and system load module (SLM) shelves.

High capacity cooling unit

The high capacity cooling unit includes three fan modules and a high-efficiency fiber air filter. The fans pull cool air into the base of the cabinet and force it through the filter. The filtered air circulates through each card module and exits out the top of the cabinet. Each fan module installs in its own drawer.

This page is left blank intentionally.

NTLX01CA

Product description

The XA-Core Extension cabinet contains a frame supervisory panel (FSP), three filler shelves, a standard XA-Core shelf, and a high capacity cooling unit.

Layout

The following figure shows the configuration of the XA-Core Extension cabinet.

NTLX01CA

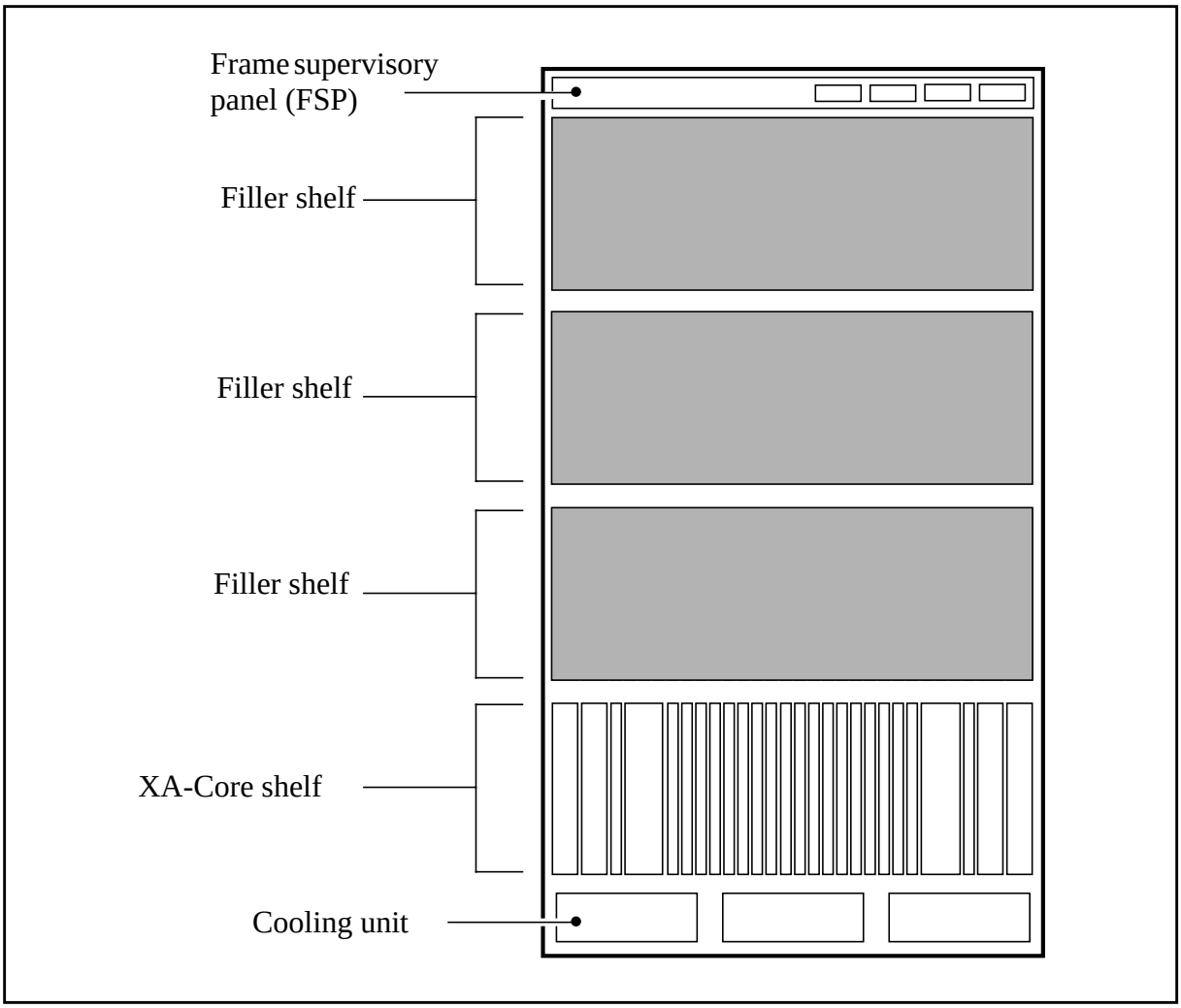

NTLX01CA (end)

Components

The cabinet contains the following components:

Qty	PEC	Description	Provisioning Rule
1	NT9X03AA	Frame supervisory panel	48V Office
1	NT9X03BA	Frame supervisory panel	60V Office
3	NT0X24BD	Filler shelf	Always provided
1	NTLX0101	XA-Core shelf	Always provided
1	NTLX10AA	High capacity cooling unit	Always provided

Frame supervisory panel

The frame supervisory panel (FSP) performs supervisory, alarm, and maintenance functions. The FSP installs in the top shelf position of the cabinet.

Filler shelf

The filler shelf assembly is required to sustain air flow and thermal dissipation within the cabinet.

XA-Core shelf

The XA-Core shelf provides the computing and data storage resources required to perform all call processing and network management functions, including digit translation, billing, and network routing. The XA-Core shelf has been created to directly replace the current SuperNode computing module (CM) and system load module (SLM) shelves.

High capacity cooling unit

The high capacity cooling unit includes three fan modules and a high-efficiency fiber air filter. The fans pull cool air into the base of the cabinet and force it through the filter. The filtered air circulates through each card module and exits out the top of the cabinet. Each fan module installs in its own drawer.

NTLX02AA

Product description

The NTLX02AA version of the PE circuit pack is supported in releases up to and including CSP13.

The NTLX02AA XA-Core Processor Element (PE) pack provides a spared, fault detecting computing engine operating in a symmetric multiprocessing environment. The processor element pack is used to perform all call processing and network management functions, including digit translation, billing, and network routing.

The processor element (PE) pack operates in simplex mode and maintains an independent service state. Accordingly, an installed PE pack can be removed or an additional PE pack can be installed without any interruption to normal system operations. This allows the processing capability of XA-Core to be dynamically scalable.

The processor element pack can only communicate directly over the XA-Core midplane with shared memory (SM) packs. Accordingly, communication between PE packs, as well as communication between PE packs and input/output processor (IOP) packs, is done through the shared memory pack.

All transmit links out of all installed processor element packs (and all installed IOP packs) are monitored by all shared memory packs. All transmit links out of all shared memory packs are monitored by all processor element packs (and all IOP packs). An address field in every transaction allows each pack to determine if that transaction is destined for it.

The features of the NTLX02AA pack are as follows:

- provision of a physical and data interface to the midplane
- support for extended architecture interconnect (XAI) protocol transactions
- provision of a pair of PowerPC 604 processors used to perform all call processing and network management functions, including digit translation, billing, and network routing
- support for sync-match mode of operation for the pair of PowerPC 604 processors to provide rapid detection of and response to processor faults
- provision of 256 MBytes of synchronous dynamic random access memory (SDRAM) for fast local access by each PowerPC 604 processor to a copy of program store
- provision of cyclic redundancy checking of the incoming data signals to identify and correct data received from shared memory over the midplane

NTLX02AA (continued)

- provision of structural and functional built in self testing (BIST) as well as reset logic for the pack
- two alarm light emitting diodes (LEDs)

Location

For information on the locations for processor element circuit packs, see the description of the NTLX02CA circuit pack in this chapter.

Layout

The following figure shows the external appearance of the XA-Core processor element pack.

NTLX02AA

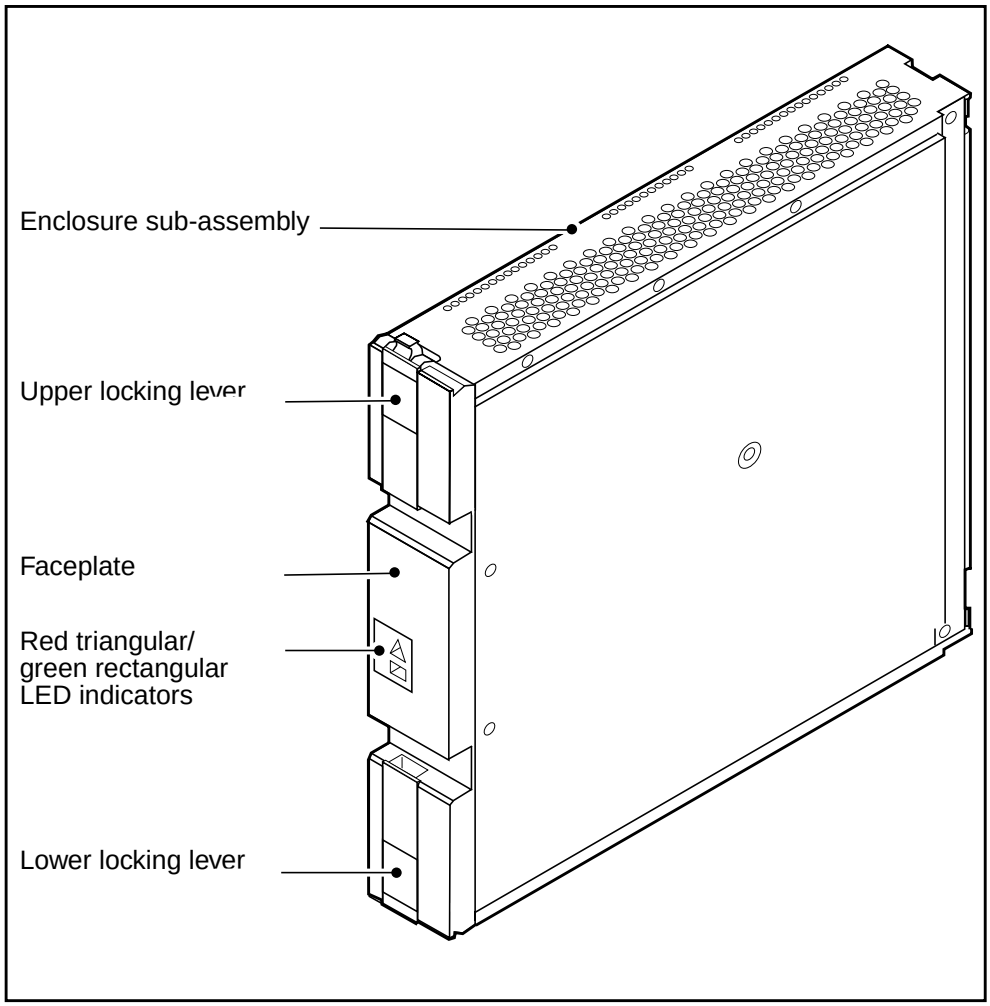

Functional description

The NTLX02AA XA-Core Processor Element (PE) pack provides a spared, fault detecting computing engine operating in a symmetric multiprocessing environment. The processor element pack is used to perform all call processing and network management functions, including digit translation, billing, and network routing.

The processor element pack connects to the XA-Core midplane through a vertical slot connector. The processor element pack XA-Core midplane interface includes five pulse receiver chips (PRCs) and one pulse transmitter chip (PTC). It provides connectivity between the XA-Core midplane and the processor element pack.

Each pulse receiver chip provides a dedicated data link for two of the up to ten installed shared memory packs. The chip receives four 1.0 GByte/sec links through the midplane from two shared memory packs, each of which is demultiplexed into eight 500 MByte/sec links for use by the pack.

The pulse transmitter chip provides a dedicated data link to all installed shared memory packs. The chip receives four 500 MBytes/sec links, which are multiplexed into two 1GByte/sec links and transmitted through the midplane to all shared memory packs

The processor element pack can only communicate directly over the XA-Core midplane with shared memory (SM) packs. Accordingly, communication between PE packs, as well as communication between PE packs and input/output processor (IOP) packs, is done through the SM pack. The SM pack provides pass through connectivity between PE packs as well as between PE packs and IOP packs.

All transmit links out of all installed processor element (PE) packs are monitored by all shared memory (SM) packs. All transmit links out of all SM packs are monitored by all PE packs. An address field in every transaction allows each pack to determine if that transaction is destined for it or not.

In the outgoing (transmit) direction, the XAI signals output by a pair of shared memory packs over the midplane are received by one of the pulse receiver chips, which demultiplexes the signals and outputs a PECL signal to a processor interface to gigabit interconnect (PIGI) application specific integrated circuit (ASIC). The PIGI outputs the signal received from the pulse receiver chip through the PPC bus to both PowerPC 604 processors.

In the incoming (receive) direction, the signal output by the master PowerPC 604 processor through the PPC bus is received by the PIGI. The PIGI applies

NTLX02AA (continued)

XAI protocol to the received signal, checks parity and then applies the signal to a pulse transmitter chip. The pulse transmitter chip multiplexes the signal and then transmits the multiplexed XAI signal over the midplane to all shared memory packs.

Functional blocks

The pack consists of the following functional blocks:

- Midplane interface (I/F)
- Processor interface to gigabit interconnect (PIGI)
- High speed instruction prefetcher path optimizer (HIPPO)
- PowerPC 604 processor
- Flash memory
- Synchronous dynamic random access memory (SDRAM)
- Test controller
- Reset controller
- Power subsystem

The following figure shows the relationship between the functional blocks.

NTLX02AA (continued)

NTLX02AA functional blocks

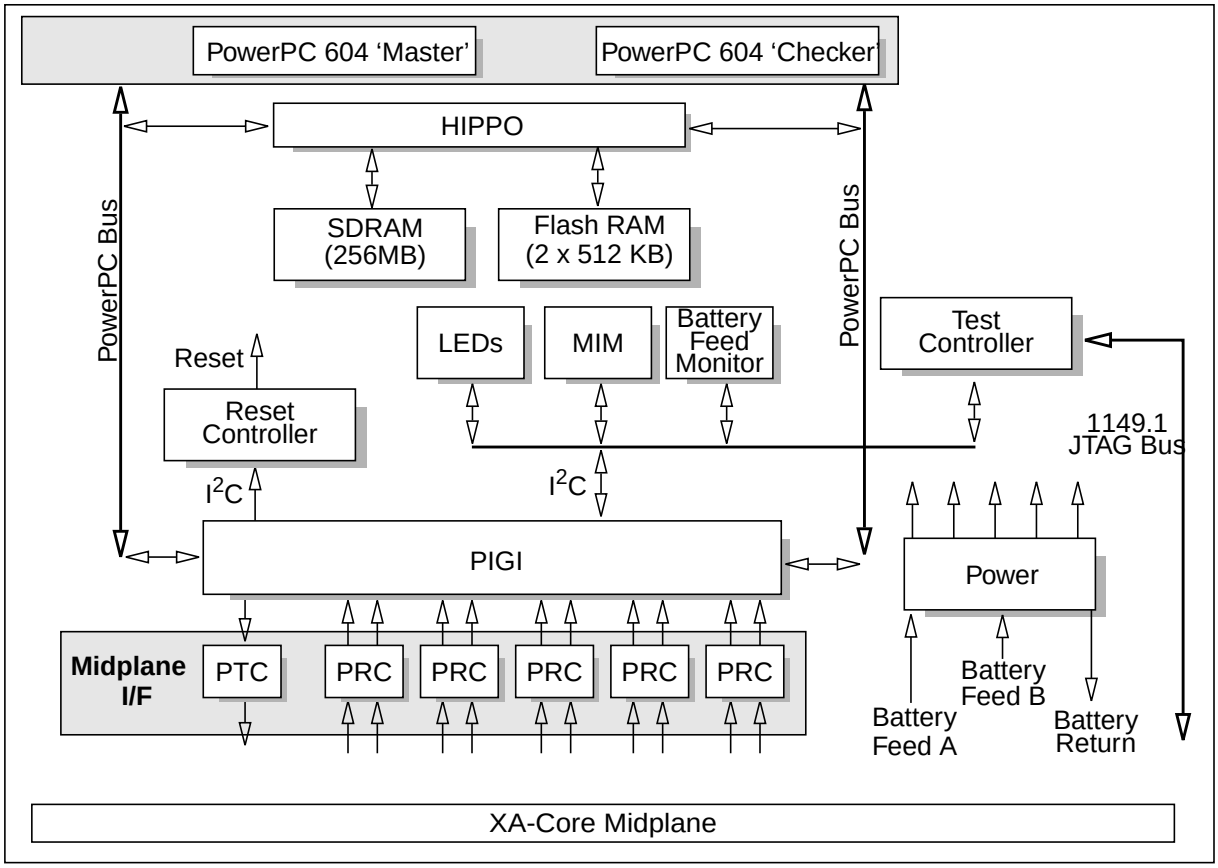

Midplane interface

The midplane interface consists of five pulse receiver chips (PRCs) and one pulse transmitter chip (PTC). It provides connectivity to the XA-Core midplane, primarily for access to shared memory.

Each pulse receiver chip (PRC) is an application specific integrated circuit (ASIC) in a 256 super ball grid array (SBGA) package, employing low voltage. 0.5 micron BICMOS technology. Each pulse receiver chip provides a dedicated data link for two of the up to ten installed shared memory packs. The chip receives four 1.0 GByte/sec links through the midplane from two shared memory packs, each of which is demultiplexed into eight 500 MByte/sec links and transmitted, at differential PECL compatible levels, to the processor interface to gigabit interconnect (PIGI) application specific integrated circuit (ASIC).

The pulse transmitter chip (PTC) is an application specific integrated circuit (ASIC) in a 132 super ball grid array (SBGA) package, employing low voltage. 0.5 micron BICMOS technology. The pulse transmitter chip provides

NTLX02AA (continued)

a dedicated data link to all installed shared memory packs. The chip receives four 500 MBytes/sec links from the PIGI, which are multiplexed into two 1.0 GByte/sec links and transmitted through the midplane to all shared memory packs.

PIGI

The processor interface to gigabit interconnect (PIGI) midplane interface controller is an application specific integrated circuit (ASIC) in a 624 pin column grid array (CGA) package, employing low voltage CMOS5S technology. The PIGI is used to arbitrate all read and write operations between the midplane (and thus shared memory) and the processor element pack.

The PIGI supports extended architecture interconnect (XAI) protocol transactions, including reset commands and external interrupts. The PIGI also detects faults in shared memory and in the midplane. Faults in shared memory are detected by matching duplicated data signals received from shared memory. Faults in the midpane are detected by cyclic redundancy checking each pulse receiver chip's incoming (receive) ports.

When a local fault on the pack is detected, the PIGI inhibits the operation of the pulse transmitter chip (PTC) and does not allow the PTC to return to operation until the fault has been cleared. When a fault on another pack has occurred and a fault message has been transmitted to the PIGI through the midplane, the PIGI will notify the PowerPC 604 processor of the fault and await instruction from the processor.

HIPPO

The high speed instruction prefetcher path optimizer (HIPPO) is an application specific integrated circuit (ASIC) in a 624 pin column grid array (CGA) package, employing low voltage 3.3V CMOS technology. The HIPPO provides arbitration for and ownership of each of the PowerPC buses. It also acts as both interrupt controller and memory controller for each PowerPC 604 processor. The HIPPO provides straight line prefetching of one or two lines of instruction code from SDRAM.

The HIPPO provides arbitration for and ownership of each PowerPC bus among the two contending resources (the PowerPC 604 processor and the PIGI). In the case of multiple simultaneous PowerPC bus ownership requests, the HIPPO grants ownership according to a specific round robin checking order (processor then PIGI) starting at the first resource following the one which was last granted bus ownership.

The HIPPO acts as memory controller for both SDRAM and FLASH memory, providing access to FLASH memory as well as access to SDRAM by the PowerPC 604 processors.

The HIPPO supports an error checking and correction (ECC) scheme used to identify and correct read/write faults to/from SDRAM and FLASH memory. The HIPPO implements a fault detection read-back mechanism which reads back the data written into SDRAM memory immediately after writing it into SDRAM in order to ensure that the write operation was fault free.

The HIPPO monitors the 66.667 MHz system clock and matches it against a second 66.667 MHz reference clock. If a mismatch occurs, the HIPPO generates a hard reset request signal to the reset controller. The reset controller then generates hard reset command to all components on the pack.

The HIPPO provides tracking and matching of the PowerPC buses, tracking bus activities in order to match the outputs of the two PowerPC 604 processors to ensure that both processors are operating in the same manner. When a fault occurs, the HIPPO, as PowerPC bus arbitrator, will not grant ownership of the PowerPC bus to either PowerPC 604 processor. As well, the reset controller will hold both processors in reset until the pack has reset itself.

PowerPC 604 processor

The PowerPC 604 166.67 MHz processor is a superscaler reduced instruction set computer (RISC) employing advanced, low voltage CMOS technology. The processor element pack is equipped with a pair of PowerPC 604 processors which operate in a sync-matched mode to provide rapid detection of and response to processor faults. When a fault occurs, the pack is immediately removed from service. The primary task of the processor is to perform all call processing and network management functions, including digit translation, billing, and network routing.

The PowerPC 604 processor gets its bootstrap code from FLASH memory upon bootup. The processor gets its operational code and static data structures from SDRAM. The HIPPO provides the straight line prefetching of code from SDRAM for the processor, which caches the prefetched code in its on-board 32 KBytes cache memory.

The pair of PowerPC 604 processors run in a master/checker configuration. Both processors receive the same inputs and their outputs are matched (checked) to ensure that both are operating in the same manner. The HIPPO and the PIGI only actually act upon the PowerPC bus signals output by one of the processors. This processor is referred to as the master PowerPC 604 processor. The other processor is referred to as the checker PowerPC 604 processor, and its activities are used to ensure that the master processor is working correctly.

When a fault occurs, the HIPPO, as PowerPC bus arbitrator, will not grant ownership of the PowerPC bus to either PowerPC 604 processor. As well, the

NTLX02AA (continued)

reset controller will hold both processors in reset until the pack has reset itself. By preventing the processors from accessing the PowerPC bus until the pack has successfully reset, a fault in one of the processors on the processor element (PE) pack cannot propagate to any other pack.

The PowerPC 604 processor filters all interrupts received from the HIPPO, which acts as the interrupt controller. Once an interrupt has been received and analyzed, the processor will issue the appropriate response in the form of one or more sequential instructions.

FLASH memory

The FLASH memory consists of a pair of 512 KByte non-volatile electrically-erasable, programmable, read-only memory (EEPROM) devices configured as two independent memory banks. Each memory bank contains all the bootstrap code for the PowerPC 604 processor. This allows the processor to boot up from one FLASH memory bank while the second is being updated.

SDRAM

The synchronous dynamic random access memory (SDRAM) consists of thirty-six dynamic random access memory (DRAM) devices in thin small outline packages arranged in two 128 MByte memory banks. The SDRAM incorporates error checking and correction (ECC). The SDRAM is used to store all the code and static data structures for the PowerPC 604 processor.

Reset controller

The reset controller is a low voltage complex programmable logic device (CPLD) used to collect and analyze all reset requests as well as issue the appropriate reset command.

The processor element pack implements three levels of reset severity: power up reset, hard reset, and soft reset. Power up and hard resets initiate structural tests and initialize all the components on the pack. Soft resets preserve the current content and state of all memories and registers. A soft reset re-initializes selective components on the pack.

Reset requests can originate from the PIGI, the HIPPO, the test controller, or the low voltage supervisory circuit. Reset requests are sent through the XI2C bus to the reset controller. Once a reset request has been received by the reset controller, it is analyzed to determine its source and whether a hard reset or a soft reset is required.

If the reset request is a power up reset request or a hard reset request, the reset controller generates a hard reset command to all components on the pack. If the reset request is not a power up or hard reset request, a soft reset is required. The reset controller analyses the reset request in order to determine which

components require resetting, and then generates a soft reset command to those components.

Test controller

The test controller consists of the following components, which together coordinate all structural tests on the pack, including built in self tests (BIST) of the PIGI, HIPPO, the five pulse receiver chips, the one pulse transmitter chip, as well as the test controller itself:

- Intelligent test controller (ITC), used to execute the design for testability (DFT) firmware which coordinates all structural test on the pack. The ITC also controls the two light emitting diodes (LEDs) used to indicate the current operational status of the pack. The ITC is a low power integrated multiprotocol processor (IMP) running in microcontroller mode.
- 1.0 MByte of read only memory (ROM), which contains all the code and static data structures for the integrated multiprotocol processor (IMP).
- Integrated test master (ITM), used to provide access to the JTAG bus by the ITC, as well as access to the reset controller, the module information memory (MIM) and the two light emitting diodes (LEDs). The ITM is a custom application specific integrated circuit (ASIC) operating under the control of the ITC.
- Module information memory (MIM), used to store module identification information as well as fault log information.
- Two light emitting diodes (LEDs), used to indicate the current operational status of the pack.

The PIGI, HIPPO, five pulse receiver chips, pulse transmitter chip, and the test controller perform a functional built in self test (BIST) in order to determine their operational status. If a persistent fault is detected, a fault message is generated. The fault message is output through the IEEE 1149.1 joint test access group (JTAG) bus to the test controller. Upon receipt of the fault message, the test controller generates a fault log which is output through the XI2C bus to the MIM. If the fault is fatal, the test controller turns off the green LED and turns on the red LED as well as setting a status register on the PIGI to failed, taking the pack out of service.

Whenever a power up or hard reset is performed, the test controller runs a scan test of the pack to ensure that the scannable components are operating properly. If a fault is detected, the test controller generates a fault log which is output through the XI2C bus to the MIM. If the fault is fatal, the test controller turns off the green LED and turns on the red LED as well as setting a status register on the PIGI to failed, taking the pack out of service.

NTLX02AA (continued)

The fault log information stored in the MIM can be output to a JTAG device connected to the JTAG bus. This information will assist in testing and repairing defective packs, simplifying the repair process and reducing the number of no fault found (NFF) conditions on packs returned for repair.

MIM

The module information memory (MIM) is a non-volatile 32 KByte serial electrically erasable programmable memory (EEPROM) device. The MIM is used to store module identification information in the standardized DMS100 format used by all packs and packlets. The MIM contains manufacturing information identifying product engineering code (PEC), release, serial number, manufacturing date, and pack operating parameters.

The MIM is also used to store fault log information generated by the test controller. The fault log includes the time and date of the fault, symptoms of the fault, location of the fault, and command or request that reported the fault. The fault log also contains the last three significant events that occurred on the pack as well as the last manual action which impacted the operation of the pack.

LEDs

Two light emitting diodes (LEDs) are used to indicate the current operational status of the pack. The operational status of the pack is determined by the test controller. The test controller communicates with each LED over the XI2C bus, causing the LED to turn on or off according to the alarm strategy for XA-Core.

Power subsystem

The pack employes a mixed voltage design requiring 3.3 Vdc and 2.5 Vdc power. The pack receives a pair of -48 Vdc or -60 Vdc office battery power feeds from the XA-Core midplane through the midplane slot connector.

Each -48/60 Vdc power fed in through the midplane slot connector is first fused through a 3.0 Amp fuse and then passed through a high frequency LC pi filter consisting of ferrite beads and ceramic capacitors. Each filtered power feed is then ORed through a pair of common anode power diodes and passed through a field effect transistor (FET) inrush current limiter. The power is then low frequency filtered by passing it through a common mode inductor followed by a low frequency LC pi filter consisting of two 47uF electrolytic capacitors and a 10uH inductor. The filtered power is then applied to a 3.3 V “analog” point of use power supply (PUPS). The high efficiency dc-dc power transformer in the PUPS converts the input voltage to 3.3 Vdc. The resulting 3.3 Vdc @ 33W analog voltage feeds the five pulse receiver chips (PRCs) and the one pulse transmitter chip (PTC).

The -48/60 Vdc power fed in through the midplane slot connector is also applied to a 3.3 V “digital” point of use power supply (PUPS). The power transformer in the PUPS converts the input voltage to 3.3 Vdc. The resulting 3.3 Vdc @ 50W digital voltage feeds all the remaining 3.3 volt “digital” components on the pack.

The -48/60 Vdc power fed in through the midplane slot connector is also applied to a 2.5 V “digital” point of use power supply (PUPS). The power transformer in the PUPS converts the input voltage to 2.5 Vdc. The resulting 2.5 Vdc @ 37.5W digital voltage feeds the PowerPC 604 processor core logic.

A battery monitoring circuit senses the power input from the office battery power feeds. If the monitor detects a low battery condition causing the power feed to fall below 35.0 Vdc, the monitoring circuit will disable all three PUPS, and will not enable them until the power feed rises above 37.5 Vdc.

A low voltage supervisor integrated circuit (IC) monitors the power output by each of the PUPS. If the voltage falls below 2.9 Vdc for either 3.3V PUPS or 2.25 Vdc for the 2.5V PUPS, it disables all three PUPS and sends a low voltage reset signal to the reset controller, causing the reset controller to generate a reset command to all components on the pack.

Technical data

This section describes the technical specifications for the NTLX02AA XA-Core processor element (PE) pack. The specifications include power requirements, pack status light emitting diodes (LEDs), technology, and equipment dimensions.

Power requirements

The power requirements for the XA-Core processor element pack appear in the following table.

Power Requirements

Parameter	Min.	Nom.	Max.
Supply voltage (Vdc)	-36	-48/60	-75
Supply current (Adc)	1.37	2.15	2.94

Status LEDs

The status LEDs are contained on the front of the pack. The LEDs are controlled by two signals from the test controller and follow the alarm strategy

NTLX02AA (end)

for XA-Core. The LED states for the pack status LEDs appear in the following table.

Pack Status LEDs

Green	Red	External Input Status
Off	Off	Unpowered, LED failure, or not inserted.
On	On	Powerup LED test or pack self-test in progress.
On	Off	Pack should not be removed. It is in service.
Off	On	Alarm state. Pack may be removed.
Off	Wink	Pack is being indicated as faulty. Pack may be removed.

Technology

The NTLX02AA uses surface mount technology where possible. The PUPS, edge connectors and some other components use through-hole technology. Most discrete components, including capacitors and resistors, are installed on the secondary side. The pack is a fourteen layer printed circuit board employing epoxy-fiberglass (FR4) material.

Equipment dimensions

The dimensions of the NTLX02AA pack are:

- overall height: 300mm (11.81 in.)
- overall depth: 280mm (11.02 in.)
- overall width: 48.7mm (1.92 in.)

NTLX02CA

Product description

The NTLX02CA XA-Core Processor Element (PE) pack provides a spared, fault detecting computing engine operating in a symmetric multiprocessing environment. The processor element pack is used to perform all call processing and network management functions, including digit translation, billing, and network routing.

The processor element (PE) pack operates in simplex mode and maintains an independent service state. Accordingly, an installed PE pack can be removed or an additional PE pack can be installed without any interruption to normal system operations. This allows the processing capability of XA-Core to be dynamically scalable.

The processor element pack can only communicate directly over the XA-Core midplane with shared memory (SM) packs. Accordingly, communication between PE packs, as well as communication between PE packs and input/output processor (IOP) packs, is done through the shared memory pack.

All transmit links out of all installed processor element packs (and all installed IOP packs) are monitored by all shared memory packs. All transmit links out of all shared memory packs are monitored by all processor element packs (and all IOP packs). An address field in every transaction allows each pack to determine if that transaction is destined for it.

The features of the NTLX02CA pack are as follows:

- provision of a physical and data interface to the midplane
- support for extended architecture interconnect (XAI) protocol transactions
- provision of a pair of PowerPC 604 processors used to perform all call processing and network management functions, including digit translation, billing, and network routing
- support for sync-match mode of operation for the pair of PowerPC 604 processors to provide rapid detection of and response to processor faults
- provision of 256 MBytes of synchronous dynamic random access memory (SDRAM) for fast local access by each PowerPC 604 processor to a copy of program store
- provision of cyclic redundancy checking of the incoming data signals to identify and correct data received from shared memory over the midplane
- provision of structural and functional built in self testing (BIST) as well as reset logic for the pack
- two alarm light emitting diodes (LEDs)

NTLX02CA (continued)

Location

If the system uses NTLX02CA PE circuit packs, then the following PE configurations are supported: 2+1 and 3+1.

The following table lists the locations of the NTLX02CA PE circuit packs for each of the supported PE configurations and for each type of cabinet in which the XA-Core shelf can be installed.

Locations for NTLX02CA PE circuit packs

	SuperNode	**SuperNode SE extension cabinet**	**SuperNode SE main cabinet**
2+1	4F, 5F, 16F	4F, 5F, 16F	4F, 5F, 16F
3+1	4F, 5F, 13F, 16F	4F, 5F, 13F, 16F	4F, 5F, 13F, 16F

Note 1: All the PE configurations shown in the table may not be available in all markets.

Note 2: Other configurations are supported if NTLX02DA PE circuit packs are used. For details, see the description of the NTLX02DA circuit pack in this chapter.

Layout

The following figure shows the external appearance of the XA-Core processor element pack.

NTLX02CA (continued)

NTLX02CA

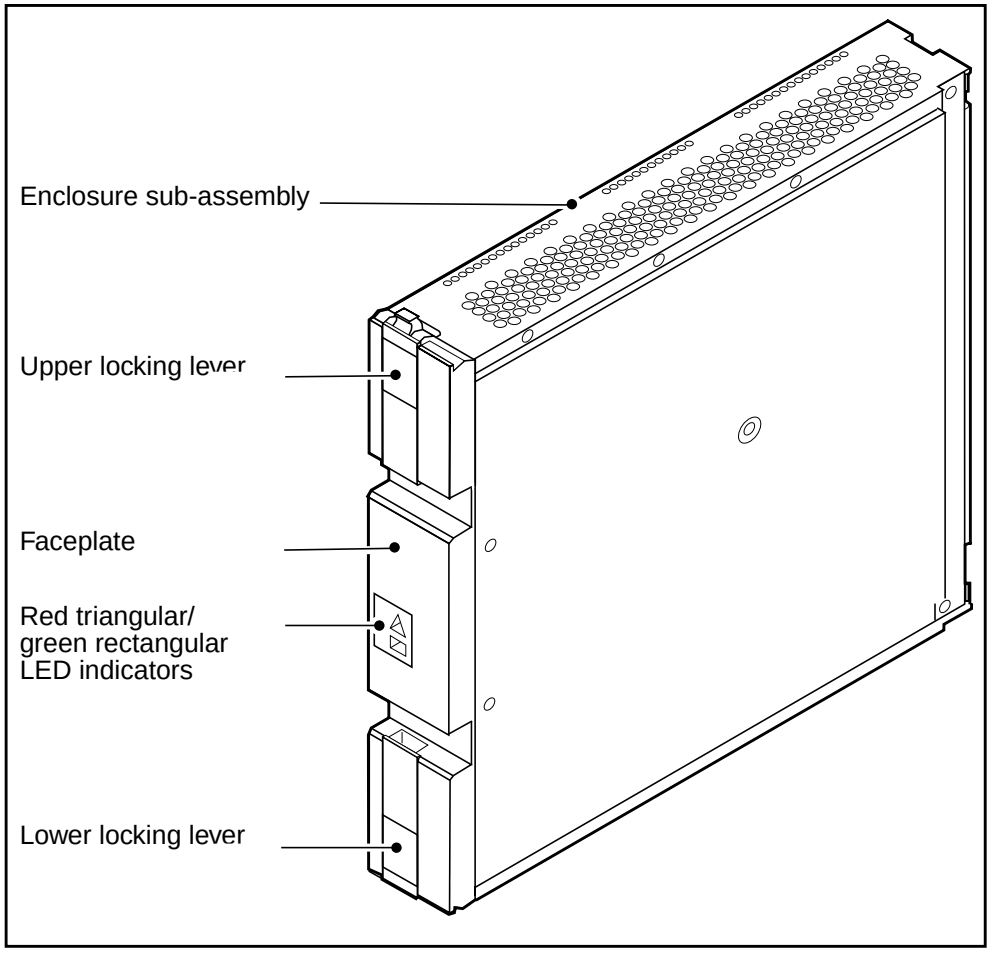

Functional description

The NTLX02CA XA-Core Processor Element (PE) pack provides a spared, fault detecting computing engine operating in a symmetric multiprocessing environment. The processor element pack is used to perform all call processing and network management functions, including digit translation, billing, and network routing.

The processor element pack connects to the XA-Core midplane through a vertical slot connector. The processor element pack XA-Core midplane interface includes five pulse receiver chips (PRCs) and one pulse transmitter chip (PTC). It provides connectivity between the XA-Core midplane and the processor element pack.

Each pulse receiver chip provides a dedicated data link for two of the up to ten installed shared memory packs. The chip receives four 1.0 GByte/sec links

NTLX02CA (continued)

through the midplane from two shared memory packs, each of which is demultiplexed into eight 500 MByte/sec links for use by the pack.

The pulse transmitter chip provides a dedicated data link to all installed shared memory packs. The chip receives four 500 MBytes/sec links, which are multiplexed into two 1GByte/sec links and transmitted through the midplane to all shared memory packs.

The processor element pack can only communicate directly over the XA-Core midplane with shared memory (SM) packs. Accordingly, communication between PE packs, as well as communication between PE packs and input/output processor (IOP) packs, is done through the SM pack. The SM pack provides pass through connectivity between PE packs as well as between PE packs and IOP packs.

All transmit links out of all installed processor element (PE) packs are monitored by all shared memory (SM) packs. All transmit links out of all SM packs are monitored by all PE packs. An address field in every transaction allows each pack to determine if that transaction is destined for it or not.

In the incoming (receive) direction, the XAI signals output by a pair of shared memory packs over the midplane are received by one of the pulse receiver chips, which demultiplexes the signals and outputs a PECL signal to a processor interface to gigabit interconnect (PIGI) application specific integrated circuit (ASIC). The PIGI outputs the signal received from the pulse receiver chip through the PPC bus to both PowerPC 604 processors.

In the outgoing (transmit) direction, the signal output by the master PowerPC 604 processor through the PPC bus is received by the PIGI. The PIGI applies XAI protocol to the received signal, checks parity and then applies the signal to a pulse transmitter chip. The pulse transmitter chip multiplexes the signal and then transmits the multiplexed XAI signal over the midplane to all shared memory packs.

Functional blocks

The pack consists of the following functional blocks:

- Midplane interface (I/F)
- Processor interface to gigabit interconnect (PIGI)
- Integrated memory controller and system support ASIC (RHINO)
- PowerPC 604 processor
- Flash memory
- Synchronous dynamic random access memory (SDRAM)

NTLX02CA (continued)

- Test controller
- Reset controller
- Power subsystem

The following figure shows the relationship between the functional blocks.

NTLX02CA functional blocks

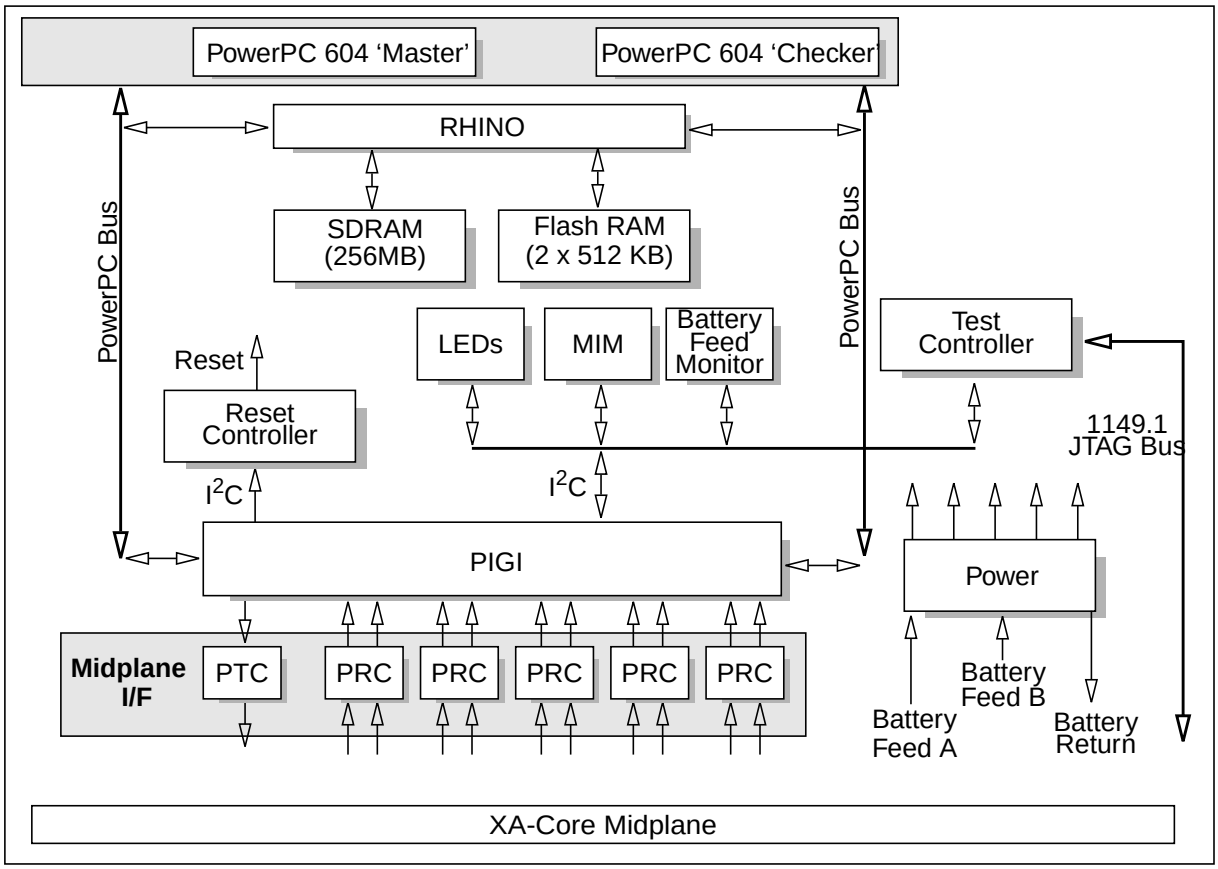

Midplane interface

The midplane interface consists of five pulse receiver chips (PRCs) and one pulse transmitter chip (PTC). It provides connectivity to the XA-Core midplane, primarily for access to shared memory.

Each pulse receiver chip (PRC) is an application specific integrated circuit (ASIC) in a 256 super ball grid array (SBGA) package, employing low voltage. 0.5 micron BICMOS technology. Each pulse receiver chip provides a dedicated data link for two of the up to ten installed shared memory packs. The chip receives four 1.0 GByte/sec links through the midplane from two shared memory packs, each of which is demultiplexed into eight 500 MByte/sec links

NTLX02CA (continued)

and transmitted, at differential PECL compatible levels, to the processor interface to gigabit interconnect (PIGI) application specific integrated circuit (ASIC).

The pulse transmitter chip (PTC) is an application specific integrated circuit (ASIC) in a 132 super ball grid array (SBGA) package, employing low voltage. 0.5 micron BICMOS technology. The pulse transmitter chip provides a dedicated data link to all installed shared memory packs. The chip receives four 500 MBytes/sec links from the PIGI, which are multiplexed into two 1.0 GByte/sec links and transmitted through the midplane to all shared memory packs.

PIGI

The processor interface to gigabit interconnect (PIGI) midplane interface controller is an application specific integrated circuit (ASIC) in a 624 pin column grid array (CGA) package, employing low voltage CMOS5S technology. The PIGI is used to arbitrate all read and write operations between the midplane (and thus shared memory) and the processor element pack.

The PIGI supports extended architecture interconnect (XAI) protocol transactions, including reset commands and external interrupts. The PIGI also detects faults in shared memory and in the midplane. Faults in shared memory are detected by matching duplicated data signals received from shared memory. Faults in the midpane are detected by cyclic redundancy checking each pulse receiver chip’s incoming (receive) ports.

When a local fault on the pack is detected, the PIGI inhibits the operation of the pulse transmitter chip (PTC) and does not allow the PTC to return to operation until the fault has been cleared. When a fault on another pack has occurred and a fault message has been transmitted to the PIGI through the midplane, the PIGI will notify the PowerPC 604 processor of the fault and await instruction from the processor.

RHINO

The RHINO, an enhanced high speed instruction prefetcher path optimizer, is an application specific integrated circuit (ASIC) in a 624 pin column grid array (CGA) package, employing low voltage 3.3V CMOS technology. The RHINO provides arbitration for and ownership of each of the PowerPC buses. It also acts as both interrupt controller and memory controller for each PowerPC 604 processor. The RHINO provides straight line prefetch of up two cache lines of instruction data each.

The RHINO provides arbitration for and ownership of each PowerPC bus among the two contending resources (the PowerPC 604 processor and the PIGI). In the case of multiple simultaneous PowerPC bus ownership requests,

the RHINO grants ownership according to a specific round robin checking order (processor then PIGI) starting at the first resource following the one which was last granted bus ownership.

The RHINO acts as memory controller for both SDRAM and FLASH memory, providing access to FLASH memory as well as access to SDRAM by the PowerPC 604 processors.

The RHINO also contains 512 Kbytes of on board SRAM. The SRAM base address relocates this storage to any 512 K boundary. The addresses of SRAM does not overlap the PIGI and the RHINO addresses, but it can overlap some other addresses such as the FLASH address.

The RHINO supports an error checking and correction (ECC) scheme used to identify and correct read/write faults to/from SDRAM and FLASH memory. The RHINO implements a fault detection read-back mechanism which reads back the data written into SDRAM memory immediately after writing it into SDRAM in order to ensure that the write operation was fault free.

The RHINO monitors the 66.667 MHz system clock and matches it against a second 66.667 MHz reference clock. If a mismatch occurs, the RHINO generates a hard reset request signal to the reset controller. The reset controller then generates hard reset command to all components on the pack.

The RHINO provides tracking and matching of the PowerPC buses, tracking bus activities in order to match the outputs of the two PowerPC 604 processors to ensure that both processors are operating in the same manner. When a fault occurs, the RHINO, as PowerPC bus arbitrator, will not grant ownership of the PowerPC bus to either PowerPC 604 processor. As well, the reset controller will hold both processors in reset until the pack has reset itself.

PowerPC 604 processor

The PowerPC 604 166.67 MHz processor is a superscaler reduced instruction set computer (RISC) employing advanced, low voltage CMOS technology. The processor element pack is equipped with a pair of PowerPC 604 processors which operate in a sync-matched mode to provide rapid detection of and response to processor faults. When a fault occurs, the pack is immediately removed from service. The primary task of the processor is to perform all call processing and network management functions, including digit translation, billing, and network routing.

The PowerPC 604 processor gets its bootstrap code from FLASH memory upon bootup. The processor gets its operational code and static data structures from SDRAM. The RHINO provides the straight line prefetching of code from

NTLX02CA (continued)

SDRAM for the processor, which caches the prefetched code in its on-board 32 KBytes cache memory.

The pair of PowerPC 604 processors run in a master/checker configuration. Both processors receive the same inputs and their outputs are matched (checked) to ensure that both are operating in the same manner. The RHINO and the PIGI only actually act upon the PowerPC bus signals output by one of the processors. This processor is referred to as the master PowerPC 604 processor. The other processor is referred to as the checker PowerPC 604 processor, and its activities are used to ensure that the master processor is working correctly.

When a fault occurs, the RHINO, as PowerPC bus arbitrator, will not grant ownership of the PowerPC bus to either PowerPC 604 processor. As well, the reset controller will hold both processors in reset until the pack has reset itself. By preventing the processors from accessing the PowerPC bus until the pack has successfully reset, a fault in one of the processors on the processor element (PE) pack cannot propagate to any other pack.

The PowerPC 604 processor filters all interrupts received from the RHINO, which acts as the interrupt controller. Once an interrupt has been received and analyzed, the processor will issue the appropriate response in the form of one or more sequential instructions.

FLASH memory

The FLASH memory consists of a pair of 512 KByte non-volatile electrically-erasable, programmable, read-only memory (EEPROM) devices configured as two independent memory banks. Each memory bank contains all the bootstrap code for the PowerPC 604 processor. This allows the processor to boot up from one FLASH memory bank while the second is being updated.

SDRAM

The synchronous dynamic random access memory (SDRAM) consists of thirty-six dynamic random access memory (DRAM) devices in thin small outline packages arranged in two 128 MByte memory banks. The SDRAM incorporates error checking and correction (ECC). The SDRAM is used to store all the code and static data structures for the PowerPC 604 processor.

Reset controller

The reset controller is a low voltage complex programmable logic device (CPLD) used to collect and analyze all reset requests as well as issue the appropriate reset command.

The processor element pack implements three levels of reset severity: power up reset, hard reset, and soft reset. Power up and hard resets initiate structural

tests and initialize all the components on the pack. Soft resets preserve the current content and state of all memories and registers. A soft reset re-initializes selective components on the pack.

Reset requests can originate from the PIGI, the RHINO, the test controller, or the low voltage supervisory circuit. Reset requests are sent through the XI2C bus to the reset controller. Once a reset request has been received by the reset controller, it is analyzed to determine its source and whether a hard reset or a soft reset is required.

If the reset request is a power up reset request or a hard reset request, the reset controller generates a hard reset command to all components on the pack. If the reset request is not a power up or hard reset request, a soft reset is required. The reset controller analyses the reset request in order to determine which components require resetting, and then generates a soft reset command to those components.

Test controller

The test controller consists of the following components, which together coordinate all structural tests on the pack, including built in self tests (BIST) of the PIGI, RHINO, the five pulse receiver chips, the one pulse transmitter chip, as well as the test controller itself:

- Intelligent test controller (ITC), used to execute the design for testability (DFT) firmware which coordinates all structural test on the pack. The ITC also controls the two light emitting diodes (LEDs) used to indicate the current operational status of the pack. The ITC is a low power integrated multiprotocol processor (IMP) running in microcontroller mode.
- 1.0 MByte of read only memory (ROM), which contains all the code and static data structures for the integrated multiprotocol processor (IMP).
- Integrated test master (ITM), used to provide access to the JTAG bus by the ITC, as well as access to the reset controller, the module information memory (MIM) and the two light emitting diodes (LEDs). The ITM is a custom application specific integrated circuit (ASIC) operating under the control of the ITC.
- Module information memory (MIM), used to store module identification information as well as fault log information.
- Two light emitting diodes (LEDs), used to indicate the current operational status of the pack.

The PIGI, RHINO, five pulse receiver chips, pulse transmitter chip, and the test controller perform a functional built in self test (BIST) in order to determine their operational status. If a persistent fault is detected, a fault message is

NTLX02CA (continued)

generated. The fault message is output through the IEEE 1149.1 joint test access group (JTAG) bus to the test controller. Upon receipt of the fault message, the test controller generates a fault log which is output through the XI2C bus to the MIM. If the fault is fatal, the test controller turns off the green LED and turns on the red LED as well as setting a status register on the PIGI to failed, taking the pack out of service.

Whenever a power up or hard reset is performed, the test controller runs a scan test of the pack to ensure that the scannable components are operating properly. If a fault is detected, the test controller generates a fault log which is output through the XI2C bus to the MIM. If the fault is fatal, the test controller turns off the green LED and turns on the red LED as well as setting a status register on the PIGI to failed, taking the pack out of service.

The fault log information stored in the MIM can be output to a JTAG device connected to the JTAG bus. This information will assist in testing and repairing defective packs, simplifying the repair process and reducing the number of no fault found (NFF) conditions on packs returned for repair.

MIM

The module information memory (MIM) is a non-volatile 32 KByte serial electrically erasable programmable memory (EEPROM) device. The MIM is used to store module identification information in the standardized DMS100 format used by all packs and packlets. The MIM contains manufacturing information identifying product engineering code (PEC), release, serial number, manufacturing date, and pack operating parameters.

The MIM is also used to store fault log information generated by the test controller and software. The fault log includes the time and date of the fault, symptoms of the fault, location of the fault, and command or request that reported the fault. The fault log also contains the last three significant events that occurred on the pack as well as the last manual action which impacted the operation of the pack.

LEDs

Two light emitting diodes (LEDs) are used to indicate the current operational status of the pack. The operational status of the pack is determined by the software control. The test controller communicates with each LED over the XI2C bus, causing the LED to turn on or off according to the alarm strategy for XA-Core.

Power subsystem

The pack employes a mixed voltage design requiring 3.3 Vdc and 2.5 Vdc power. The pack receives a pair of -48 Vdc or -60 Vdc office battery power feeds from the XA-Core midplane through the midplane slot connector.

NTLX02CA (continued)

Each -48/60 Vdc power fed in through the midplane slot connector is first passed through a high frequency LC pi filter consisting of ferrite beads and ceramic capacitors and fused through a 5.0 Amp fuse. Each filtered power feed is then ORed through a pair of common anode power diodes and passed through a field effect transistor (FET) inrush current limiter. The power is then low frequency filtered by passing it through a common mode inductor followed by a low frequency LC pi filter consisting of two 47uF electrolytic capacitors and a 10uH inductor. The filtered power is then applied to a 3.3 V "analog" point of use power supply (PUPS). The high efficiency dc-dc power transformer in the PUPS converts the input voltage to 3.3 Vdc. The resulting 3.3 Vdc @ 33W analog voltage feeds the five pulse receiver chips (PRCs) and the one pulse transmitter chip (PTC).

The -48/60 Vdc power fed in through the midplane slot connector is also applied to a 3.3 V "digital" point of use power supply (PUPS). The power transformer in the PUPS converts the input voltage to 3.3 Vdc. The resulting 3.3 Vdc @ 50W digital voltage feeds all the remaining 3.3 volt "digital" components on the pack.

The -48/60 Vdc power fed in through the midplane slot connector is also applied to a 2.5 V "digital" point of use power supply (PUPS). The power transformer in the PUPS converts the input voltage to 2.5 Vdc. The resulting 2.5 Vdc @ 37.5W digital voltage feeds the PowerPC 604 processor core logic.

A battery monitoring circuit senses the power input from the office battery power feeds. If the monitor detects a low battery condition causing the power feed to fall below 35.0 Vdc, the monitoring circuit will disable all three PUPS, and will not enable them until the power feed rises above 37.5 Vdc.

A low voltage supervisor integrated circuit (IC) monitors the power output by each of the PUPS. If the voltage falls below 2.9 Vdc for either 3.3V PUPS or 2.25 Vdc for the 2.5V PUPS, it disables all three PUPS and sends a low voltage reset signal to the reset controller, causing the reset controller to generate a reset command to all components on the pack.

Technical data

This section describes the technical specifications for the NTLX02CA XA-Core processor element (PE) pack. The specifications include power requirements, pack status light emitting diodes (LEDs), technology, and equipment dimensions.

Power requirements

The power requirements for the XA-Core processor element pack appear in the following table.

NTLX02CA (end)

Power Requirements

Parameter	Min.	Nom.	Max.
Supply voltage (Vdc)	-36	-48/60	-75
Supply current (Adc)	1.37	2.15	2.94

Status LEDs

The status LEDs are on the front of the pack. The LEDs are controlled by two signals from the test controller and follow the alarm strategy for XA-Core. The LED states for the pack status LEDs appear in the following table.

Pack Status LEDs

Green	Red	External Input Status
Off	Off	Unpowered, LED failure, or not inserted.
On	On	Powerup LED test or pack self-test in progress.
On	Off	Pack should not be removed. It is in service.
Off	On	Alarm state. Pack may be removed.
Off	Wink	Pack is being indicated. Pack may be removed.

Technology

The NTLX02CA uses surface mount technology where possible. The PUPS, edge connectors and some other components use through-hole technology. Most discrete components, including capacitors and resistors, are installed on the secondary side. The pack is a fourteen layer printed circuit board employing epoxy-fiberglass (FR4) material.

Equipment dimensions

The dimensions of the NTLX02CA pack are:

- overall height: 300mm (11.81 in.)
- overall depth: 280mm (11.02 in.)
- overall width: 48.7mm (1.92 in.)

NTLX02DA

Product description

The NTLX02DA XA-Core Processor Element (PE) pack provides the same features as the earlier models (NTLX02AA and NTLX02CA). It provides a improved performance as compared to earlier models, because of the microprocessors that are used, and because of the L2 cache.

The NTLX02DA PE circuit pack uses the same architecture as earlier-model PE circuit packs but includes the following changes:

- It uses Motorola MPC7410 microprocessors running at a core frequency of 500 MHz.
- Each processor uses a backside Level 2 cache (L2 cache) of two MBytes. This cache is used as an instruction cache for program store.
- Local SDRAM is 512 MBytes.
- Boot ROM FW FLASH space is two banks of 1 MByte each.

Location

If the system uses NTLX02DA PE circuit packs, then PE configurations ranging from 1+1 to 9+1 are supported. However, there are restrictions on the configurations that can be used in certain cases. The restrictions are as follows.

- The 8+1 and 9+1 PE configurations are possible only if slots 6R and 13R do not contain IOP or HIOP circuit packs.
- All the PE configurations may not be available in all markets or for all products.
- In an XA-Core shelf in a SuperNode SE cabinet (NTLX01BA), if you are using NTLX02DA PE circuit packs, then the maximum supported PE configuration is 2+1 in most cases. For information on the exceptional cases, see "Restrictions for an XA-Core shelf in a SuperNode SE (NTLX01BA) cabinet" in the chapter titled "Introduction".

NTLX02DA (continued)

The following table lists the locations of the NTLX02DA PE circuit packs for each of the supported PE configurations.

Locations for NTLX02DA PE circuit packs

PE configuration	Slots used
1+1	4F, 16F
2+1	4F, 13F, 16F
3+1	4F, 5F, 13F, 16F
4+1	4F, 5F, 6F, 13F, 16F
5+1	4F, 5F, 6F, 12F, 13F, 16F
6+1	4F, 5F, 6F, 12F, 13F, 14F, 16F
7+1	4F, 5F, 6F, 12F, 13F, 14F, 16F, 12R
8+1	4F, 5F, 6F, 12F, 13F, 14F, 16F, 6R, 12R
9+1	4F, 5F, 6F, 12F, 13F, 14F, 16F, 6R, 12R, 13R

Functional description

The pack consists of the following functional blocks:

- Midplane interface (I/F)
- Processor interface to gigabit interconnect (PIGI)
- Integrated memory controller and system support ASIC (RHINO)
- PowerPC MPC7410 processor
- Flash memory
- Synchronous dynamic random access memory (SDRAM)
- Test controller
- Reset controller
- Power subsystem

The following figure shows the relationship between the functional blocks.

NTLX02DA (continued)

NTLX02DA functional blocks

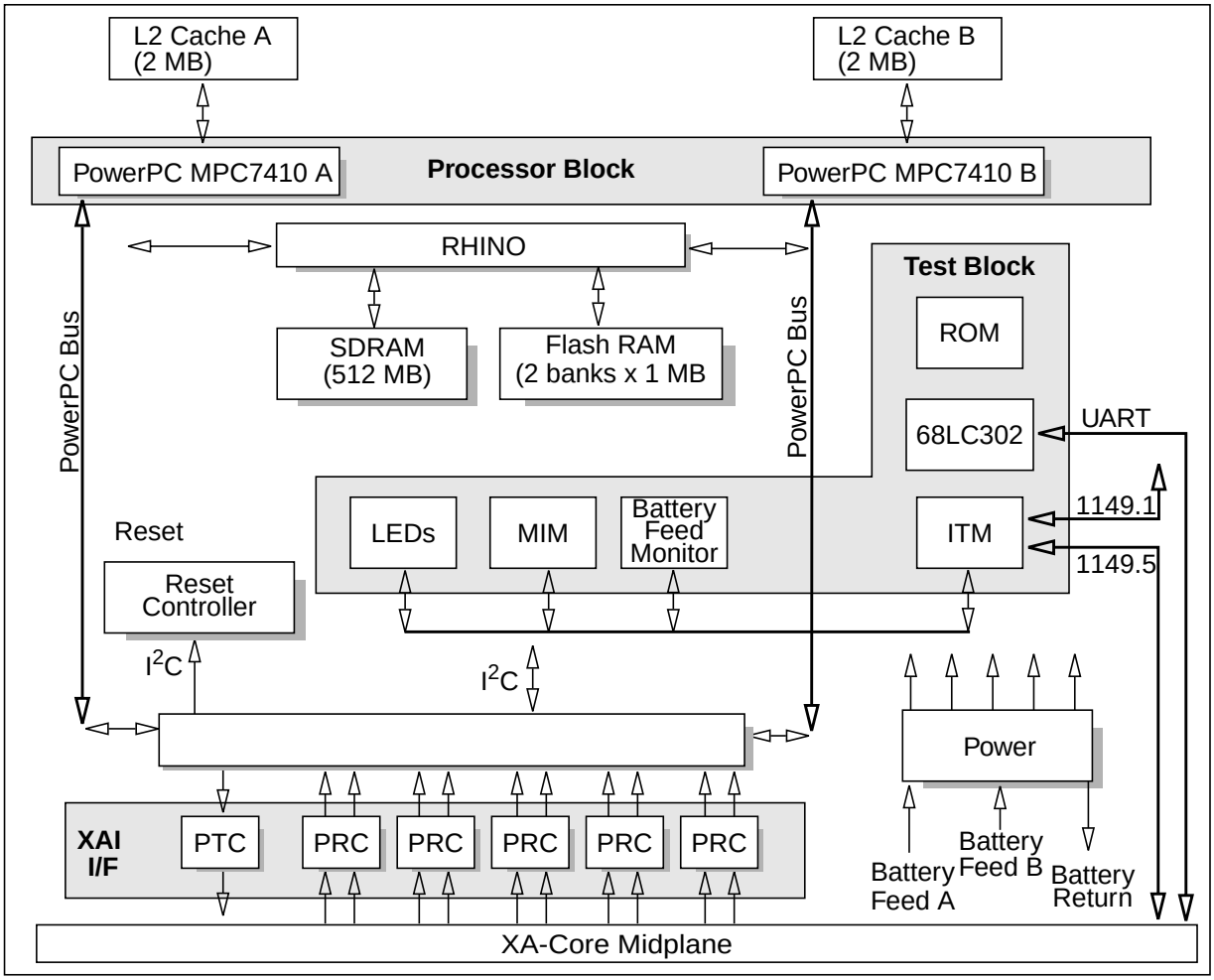

Technical data

This section describes the technical specifications for the NTLX02DA XA-Core processor element (PE) pack. The specifications include power requirements, pack status light emitting diodes (LEDs), and equipment dimensions.

NTLX02DA (end)

Power requirements

The power requirements for the XA-Core processor element pack appear in the following table.

Power Requirements

Parameter	Min.	Nom.	Max.
Supply voltage (Vdc)	-36	-48/60	-75
Supply current (Adc)	1.37	2.15	2.94

Status LEDs

The status LEDs are on the front of the pack. The LEDs are controlled by two signals from the test controller and follow the alarm strategy for XA-Core. The LED states for the pack status LEDs appear in the following table.

Pack Status LEDs

Green	Red	External Input Status
Off	Off	Unpowered, LED failure, or not inserted.
On	On	Powerup LED test or pack self-test in progress.
On	Off	Pack should not be removed. It is in service.
Off	On	Alarm state. Pack may be removed.
Off	Wink	Pack is being indicated. Pack may be removed.

Equipment dimensions

The dimensions of the NTLX02DA pack are:

- overall height: 300mm (11.81 in.)
- overall depth: 280mm (11.02 in.)
- overall width: 48.7mm (1.92 in.)

NTLX03AA/BA

Product description

The NTLX03AA/BA XA-Core Input/Output Processor (IOP) pack provides a generic platform for all communication and mass storage packlets. The IOP pack also provides a physical interface to the XA-Core midplane. Accordingly, the IOP pack is used to provide connectivity between mass storage and communication packlets and the XA-Core midplane.

The single width IOP pack (NTLX03AA)provides a duplicate communications link over optic cable 3 (OC-3) with the installation of the NTLX05AA OC-3 two-port interface packlet. This link is intended primarily as the core to message switch interconnect (CMIC) link.

The single width IOP pack provides reset terminal interface (RTIF) RS-232C, RS-422, and Current Link serial ports with the installation of the NTLX08AA Reset Terminal Interface packlet.

The single width IOP pack can also be used to mount ATM multi-node Data Interface (AMDI) packlets or Ethernet (ETHR) interface packlets for services requiring ATM or IP network access.

The double width IOP pack (NTLX03BA) provides a hard disk interface port and 4.0 GByte hard disk with the installation of the NTLX06AA hard disk packlet.

The double width IOP pack provides a digital audio tape (DAT) interface port and 1.3 GByte, 2.0 GByte, or 4.0 GByte DAT drive with the installation of the NTLX07AA digital audio tape packlet.

Internally, the NTLX03AA IOP pack is identical to the NTLX03BA IOP pack. The ONLY difference between the two is the width of the packaging. The NTLX03AA is a single wide pack (measuring approximately 1.92 in or 48.7 mm in width). The NTLX03BA is a double wide pack (measuring approximately 3.89 in or 98.7 mm in width). The double width is required in order to accommodate the digital audio tape (DAT) drive and/or hard disk drive installed on the pack.

The features of the NTLX03AA/BA pack are as follows:

- provision of a 32-bit multiplexed peripheral component interconnect (PCI) bus for connectivity to the packlet
- provision of a 92-bit multiplexed IOP bus for connectivity to the midplane
- provision of a physical and data interface to the midplane for the installed packlets

NTLX03AA/BA (continued)

- support for all extended architecture interface (XAI) protocol transactions
- provision of a local compute engine based on a Motorola PowerPC509 embedded micro-controller used to handle both internally and externally generated interrupts
- provision of structural and functional built in self testing (BIST) as well as reset logic for the pack and installed packlets
- support for live packlet insertion and packlet presence detection
- two alarm light emitting diodes (LEDs)

Location

The single width pack provisioned with a RTIF or a CMIC packlet is installed in slots 04R and 15R on the rear side of the XA-Core midplane assembly. In addition, the single width pack may be installed in any slot position which can accept a processor element (PE) pack. IOP packs with cable bearing packlets should only be installed on the rear side of the XA-Core midplane assembly.

The single width pack provisioned with AMDI or ETHR packlets may be installed in slot positions 5R, 6R, 13R, and 14R (with slot 12R available as an alternate spare).

The double width pack provisioned with a DAT or a Hard Drive is installed in slots 02F-03F and/or slots 17F-18F on the front side of the XA-Core midplane assembly.

Layout

The following figure shows the external configuration of the XA-Core single width input/output processor pack.

NTLX03AA/BA (continued)

NTLX03AA single-width Input/output processor

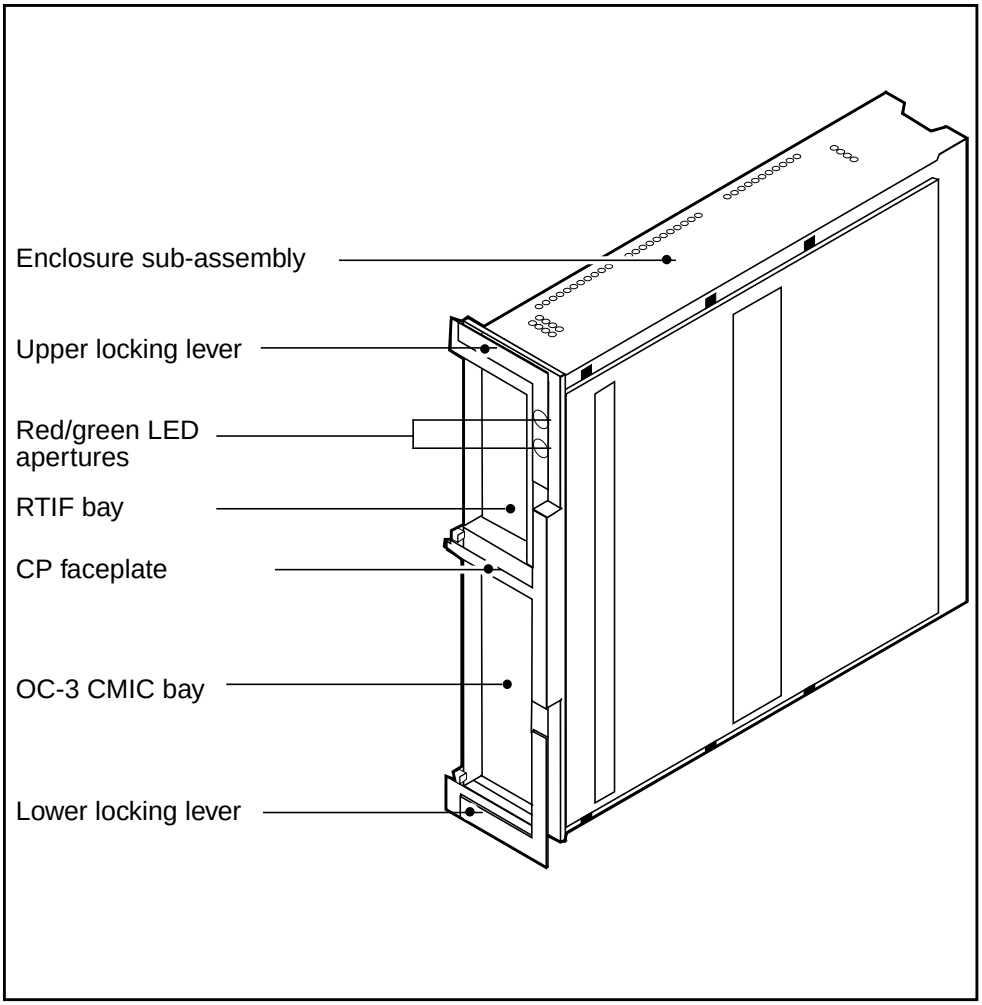

The following figure shows the external configuration of the XA-Core double width input/output processor pack.

NTLX03AA/BA (continued)

NTLX03BA Double width input/output processor

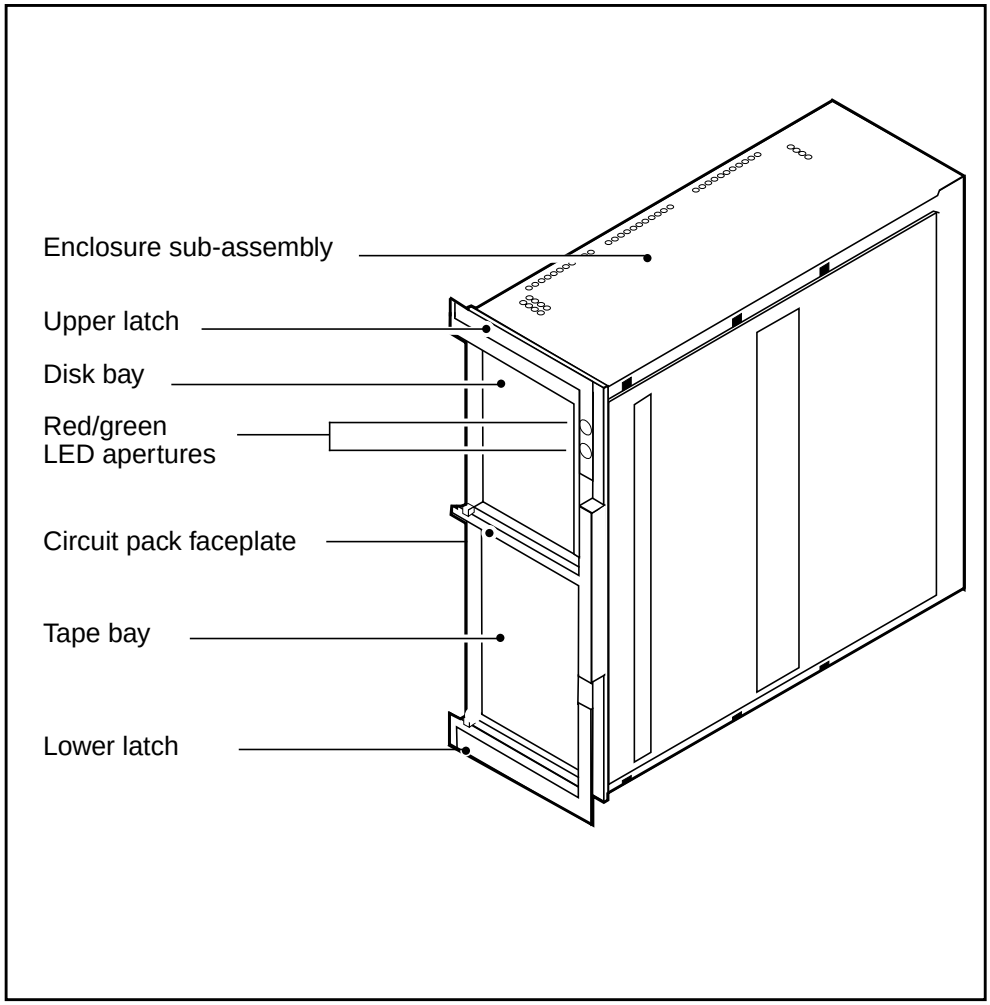

Functional description

The single width XA-Core Input/Output Processor (IOP) pack provides a generic platform for serial (RS-232C, RS-422, and Current Loop) communications and SONET OC-3 core to message switch interconnect (CMIC) communications. The double width XA-Core Input/Output Processor (IOP) pack provides a generic platform for transportable (digital audio tape) and fixed (hard drive) mass storage devices.

The single width IOP pack can also be used to mount ATM multi-node Data Interface (AMDI) packlets or Ethernet (ETHR) interface packlets for services requiring ATM or IP network access.

NTLX03AA/BA (continued)

Each packlet connects to the IOP pack through a 25 pin connector. The IOP pack connects to the XA-Core midplane through a vertical slot connector. Although the double width IOP pack occupies two slot positions on the XA-Core midplane, it connects through one vertical slot connector.

The IOP pack XA-Core midplane interface includes a set of five pulse receiver chips (PRCs) and a single pulse transmitter chip (PTC). It provides connectivity between the XA-Core midplane and the IOP pack, primarily for read/write access to shared memory.

Each pulse receiver chip provides a dedicated data link for two of the up to ten shared memory packs. Each chip receives two 4 GByte/sec links through the midplane from two shared memory packs, each of which is demultiplexed into eight 500 MByte/sec links for use by the IOP pack.

The pulse transmitter chip provides a dedicated data link to all installed shared memory packs. The chip receives eight 500 MBytes/sec links, which are multiplexed into two 1GByte/sec links and transmitted, via the midplane, to all shared memory packs.

In the outgoing (transmit) direction, the XAI protocol signal output by a pair of shared memory packs over the midplane is received by one of the pulse receiver chips, which demultiplexes the signal and outputs a PECL compatible signal to a processor interface to gigabit interconnect (PIGI) midplane interface controller. The PIGI outputs the signal received from the pulse receiver chip through the IOP bus to a bus arbitrator. The bus arbitrator checks the address and parity, seizes ownership of the peripheral component interconnect (PCI) bus, and then outputs the signal through the PCI bus to the addressed packlet.

In the incoming (receive) direction, the signal output by a packlet through the PCI bus is received by a bus arbitrator. The bus arbitrator seizes ownership of the IOP bus and then outputs the signal through the IOP bus to a processor interface to gigabit interconnect (PIGI) midplane interface controller. The PIGI seizes ownership of the midplane, applies XAI protocol to the received signal, checks parity and then applies the signal to a pulse transmitter chip. The pulse transmitter chip multiplexes the signal and then transmits the multiplexed XAI protocol signal over the midplane to all shared memory packs.

Functional blocks

The pack consists of the following functional blocks:

- Midplane interface (I/F)
- Bus arbitrator

NTLX03AA/BA (continued)

- Local bus controller
- MPC509 micro-controller
- Flash memory
- Synchronous static random access memory (S-SRAM)
- Packlet presence and isolation
- Reset manager
- Integrated test master
- Clock subsystem
- Power subsystem

The following figure shows the relationship between the functional blocks.

NTLX03AA/BA (continued)

NTLX03AA/BA functional blocks

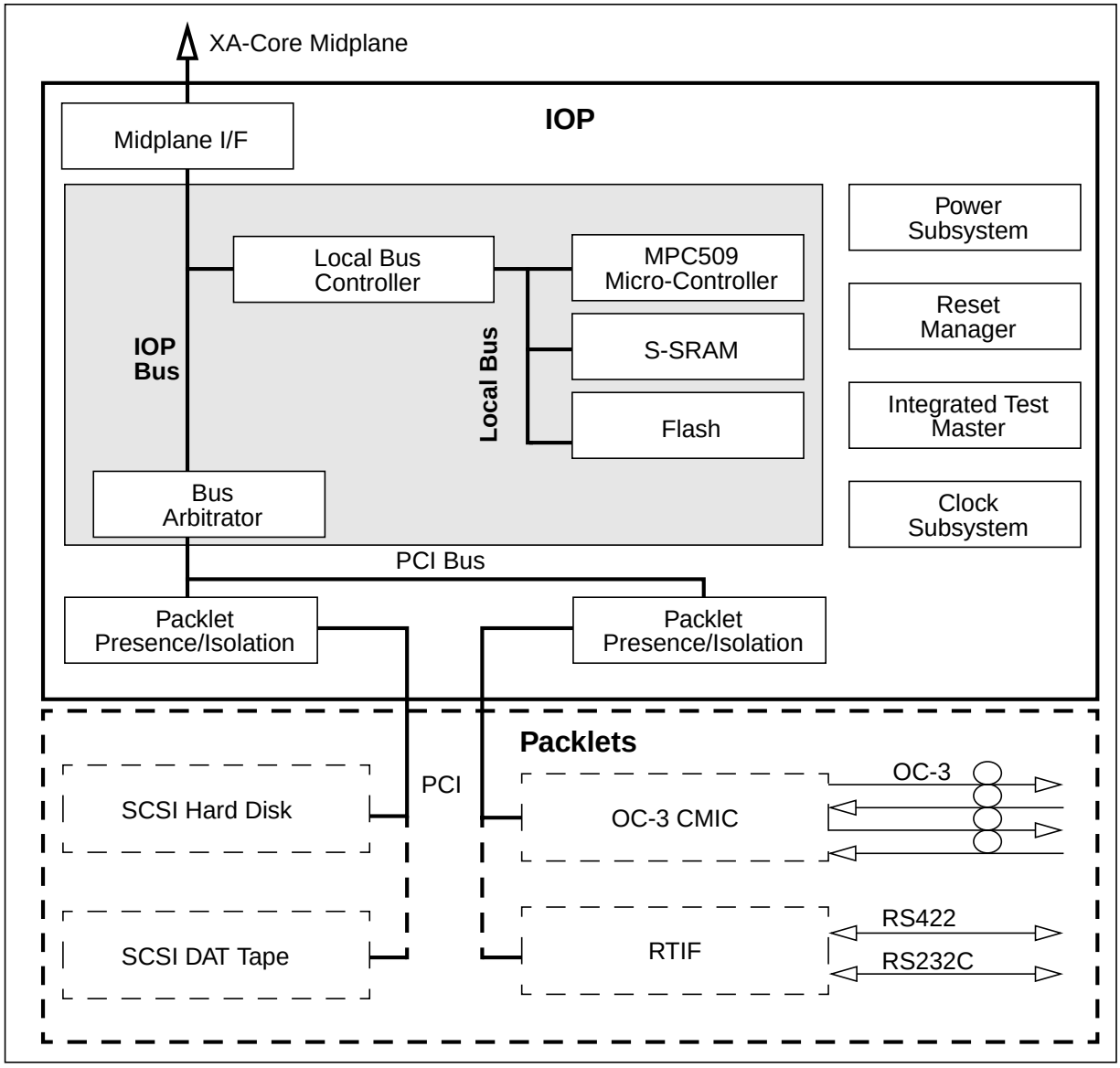

Midplane interface

The midplane interface consists of a set of five pulse receiver chips (PRCs), a single pulse transmitter chip (PTC), and a processor interface to gigabit interconnect (PIGI) midplane interface controller. It provides connectivity between the XA-Core midplane and the IOP pack, primarily for read/write access to shared memory.

Each pulse receiver chip (PRC) is a 256 super ball grid array (SBGA) transceiver employing low voltage. 0.5 micron BICMOS technology. Each

NTLX03AA/BA (continued)

pulse receiver chip provides a dedicated data link for two of the up to ten shared memory packs. The chip receives two 4 GByte/sec links through the midplane from two shared memory packs, each of which is demultiplexed into eight 500 MByte/sec links and transmitted, at differential PECL compatible levels, to the PIGI.

The pulse transmitter chip (PTC) is a 168 super ball grid array (SBGA) transceiver employing low voltage. 0.5 micron BICMOS technology. The pulse transmitter chip provides a dedicated data link to all installed shared memory packs. The chip receives four 500 MBytes/sec links from the PIGI, which are multiplexed into two 1GByte/sec links and transmitted, via the midplane, to all shared memory packs.

The processor interface to gigabit interconnect (PIGI) midplane interface controller is an application specific integrated circuit (ASIC) 624 pin column grid array (CGA) employing low voltage CMOS5S technology. The PIGI is used to arbitrate all read and write operations between the midplane (and thus shared memory) and the IOP pack.

The PIGI supports all extended architecture (XAI) protocol transactions, including reset commands and external interrupts. The PIGI also detects faults in shared memory and in the midplane. Faults in shared memory are detected by matching duplicated data signals received from shared memory. Faults in the midplane are detected by cycle redundancy checking the incoming data signals. When a fault is detected, the PIGI inhibits the operation of the pulse transmitter chip (PTC) and does not allow the PTC to return to operation until the fault has been cleared.

In the outgoing (transmit) direction, the XAI protocol signals output by a pair of shared memory packs over the midplane are received by one of the pulse receiver chips, which demultiplexes the signals and outputs a PECL compatible signal to the PIGI. The PIGI outputs the signal received from the pulse receiver chip through the IOP bus to the bus arbitrator.The bus arbitrator checks the address and parity, seizes ownership of the peripheral component interconnect (PCI) bus, and then outputs the signal through the PCI bus to the addressed packlet.

In the incoming (receive) direction, the signal output by a packlet through the PCI bus is received by the bus arbitrator. The bus arbitrator obtains ownership of the IOP bus from the local bus controller and then outputs the signal over the IOP bus to the PIGI. The PIGI obtains ownership of the midplane, applies XAI protocol to the received signal, checks parity and then applies the signal to the pulse transmitter chip. The pulse transmitter chip multiplexes the signal and then transmits the multiplexed XAI protocol signal over the midplane to all shared memory packs.

Bus arbitrator

The bus arbitrator is an application specific integrated circuit (ASIC) plastic ball grid array (BGA) employing low voltage 3.3V CMOS technology. It is effectively the bridge between the packlet 32 bit wide PCI bus and the IOP pack 92 bit wide IOP bus. The bus arbitrator permits packlets to burst data into shared memory through the PIGI.

The bus arbitrator provides arbitration for and ownership of the PCI bus among three contending resources (the two installed packlets and the bus arbitrator itself). In the case of multiple simultaneous PCI bus ownership requests, the bus arbitrator grants ownership according to a specific round robin checking order (bus arbitrator then lower packlet then upper packlet) starting at the first resource following the one which was last granted bus ownership.

The bus arbitrator includes a 256 byte dual-port first in/first out (FIFO) buffer. This dual-port buffer provides 256 bytes of buffering for the simultaneous PCI burst reads and burst writes through the IOP bus.

In the outgoing (transmit) direction, the signal output by the PIGI through the IOP bus is received into the bus arbitrator FIFO buffer. The bus arbitrator then seizes control of the PCI bus, checks address and parity, and outputs the signal through the PCI bus to the addressed packlet.

In the incoming (receive) direction, the signal output by a packlet through the PCI bus is received into the bus arbitrator FIFO buffer. The bus arbitrator then requests ownership of the IOP bus from the local bus controller. Once IOP bus ownership has been granted by the local bus controller, address and parity are checked and the signal is then output through the IOP bus to the PIGI, which transmits the signal over the midplane to shared memory.

Local bus controller

The local bus controller is a multi function programmable 352 pin super ball grid array (SBGA) employing low voltage 3.3V CMOS technology. It is effectively the bridge between the 92 bit IOP bus and the 64 bit local bus. The local bus controller utilizes a set of bi-directional transceivers to couple the IOP bus to the local bus.

The local bus controller provides arbitration for and ownership of the IOP bus between three contending resources (the bus arbitrator, the PIGI, and the MPC509 micro-controller) In the case of multiple simultaneous IOP bus ownership requests, the local bus controller grants ownership according to a specific round robin checking order (micro-controller then PIGI then bus arbitrator) starting at the first resource following the one which was last granted bus ownership.

NTLX03AA/BA (continued)

The local bus controller performs the bus protocol conversion required in order for the MPC509 micro-processor to access the IOP bus, and the bus protocol conversion required in order for the bus arbitrator and the PIGI to access the local bus (and thus the MPC509 micro-controller).

The local bus controller acts as memory controller for both S-SRAM and FLASH memory, providing access to FLASH memory as well as access to S-SRAM by the MPC509 micro-controller. The micro-controller exercises continual ownership of the local bus.

In the incoming (receive) direction, control signals output by the PIGI or the bus arbitrator through the IOP bus are applied to the receive section of a bi-directional transceiver on the local bus controller. The signal is converted from a 64 bit data signal to a 32 bit data signal. The converted signal is applied to the transmitter section of the transceiver, which outputs the signal through the local bus to the MPC509 micro-controller.

In the outgoing (transmit) direction, control signals output by the micro-controller through the local bus are applied to the receive section of a bi-directional transceiver on the local bus controller. The signal is converted from a 32 bit data signal to a 64 bit data signal. Address and parity are checked and the converted signal is then applied to the transmitter section of the transceiver, which outputs the signal through the IOP bus to the addressee (the PIGI or the bus arbitrator).

MPC509 micro-controller

The Motorola PowerPC 509 embedded 33 MHz micro-controller is a reduced instruction set computer (RISC) employing advanced, low voltage CMOS technology integrating the functionality required to initialize, monitor, and control the operation of the components on the IOP pack as well as those on the installed packlets. The primary task of the micro-controller is to filter interrupts generated by the IOP hardware and its installed packlets and respond by issuing the appropriate instructions.

The MPC509 micro-controller fetches its code from FLASH memory upon bootup and uses the S-SRAM as code space and data store during regular operation.

The core of the MPC509 micro-controller is its interrupt controller, which can service up to seven external interrupt sources. Four of these are of fixed priority, while the remaining three are firmware programmable. Once an interrupt has been received and analyzed, the micro-controller will issue the appropriate response in the form of one or more sequential instructions.

NTLX03AA/BA (continued)

Interrupts generated by the PIGI or interrupts generated on the processing element (PE) pack and transmitted to the PIGI over the midplane are output through the IOP bus to the local bus controller. Interrupts generated by the bus arbitrator or interrupts generated on an installed packlet and transmitted to the bus arbitrator over the PCI bus are output through the IOP bus to the local bus controller. Each interrupt received by the local bus controller is output through the local bus to the MPC509 micro-controller. Fetching its code and required data from S-SRAM, the micro-controller analyses the interrupt to determine the appropriate response. A set of one or more sequential instructions are then output through the local bus to the local bus controller. The local bus controller checks the address on the instruction and then outputs the instruction through the IOP bus to the addressed component.

FLASH memory

The FLASH memory is a 512K x 16 bit non-volatile memory configured as two independent memory banks of 256K x 16 bit. Each memory bank contains all the code and static data structures for the MPC509 micro-controller. This allows the micro-controller to execute out of one FLASH memory bank while the second is being updated.

In order to benefit from faster access times, much of the code is copied from FLASH memory to the SRAM by the micro-controller upon bootup or reset, so that all subsequent code and data fetches will be from the S-SRAM.

S-SRAM

The synchronous static random access memory (S-SRAM) is a 512K x 36 bit static random access memory ball grid array (BGA) device which permits parity checking.

The S-SRAM is used to store code for the MPC509 micro-controller. This code is copied from FLASH memory to the S-SRAM by the micro-controller upon bootup or reset so that all subsequent code and data fetches will be from the S-SRAM. This allows the micro-controller to benefit from faster access times relative to execution out of FLASH memory.

Packlet presence

The packlet presence circuit consists of a capacitor, a pair of resistors and a diode. With no packlet inserted, the circuit receives no power from the packlet. When a packlet is inserted, power from the packlet is fed into the packlet presence circuit, causing a presence signal to be sent through the PCI bus and the IOP bus to the local bus controller. The local bus controller generates an interrupt message which is output to the MPC509 micro-controller, informing the micro-controller that a packlet has been inserted. The packlet is initialized and data can then be sent to and received from the packlet.

NTLX03AA/BA (continued)

When a packlet is removed, power from the packlet is removed from the packlet presence circuit, causing a event signal to be sent through the PCI bus and the IOP bus to the local bus controller. The local bus controller generates an interrupt message which is output to the MPC509 micro-controller, informing the micro-controller that a packlet has been removed. Data will now be inhibited from being sent to and received from the packlet.

Packlet isolation

The packlet isolation circuit consists of a set of field effect transistor (FET) switches installed in series with the PCI bus. During normal operation, the switches are turned on, allowing access to the PCI bus. The local bus controller monitors the operational status of the PCI bus. If it detects PCI bus corruption, it turns off the FET switches, prohibiting access to the PCI bus, thus isolating the packlet.

When a packlet becomes faulty, the packlet generates a fault message which is output through the joint test access group (JTAG) bus to the integrated test master (ITM). Upon receipt of the fault message, the ITM generates an interrupt message which is passed to the MPC509 micro-controller, informing the micro-controller that a packlet has become faulty. The micro-controller generates a control signal which is passed to the local bus controller, causing the local bus controller to turn off the FET switches, thus prohibiting access to the PCI bus and isolating the faulty packlet.

Reset manager

The reset manager is a low voltage CMOS programmable logic device (CPLD) used to collect and analyze all reset requests as well as issue the appropriate reset command. All reset requests and reset commands are transmitted over a two wire serial XI2C bus.

The IOP pack implements three levels of reset severity: power up reset, hard reset, and soft reset. Power up and hard resets perform structural tests, fully initialize all the components on the IOP pack and/or the installed packlets, and begin execution of each component’s firmware. Soft resets preserve the current contents of all random access memories as well as control and status information. A soft reset re-initializes selective components on the IOP pack and/or the installed packlets, and begins execution of those components’ firmware.

Local reset requests can originate from the PIGI, the integrated test master (ITM), the MPC509 micro-controller, or the battery monitoring circuit. Such requests are sent through the XI2C bus to the reset manager. Remote reset requests can originate from a packlet installed in the IOP pack. Such requests are sent through the XI2C bus to the reset manager. Reset requests can also originate from a shared memory pack. Such requests are sent through the

XA-Core midplane to the PIGI, which forwards the request as a local reset request to the reset manager through the XI2C bus.

Once a reset request has been received by the reset manager, it is analyzed to determine whether a power up reset, a hard reset, or a soft reset is required. If the reset request is a local power up reset request, the reset manager generates a power up reset command to all components on the pack and each installed packlet. If the reset request is a remote power up reset request, the reset manager generates a power up reset command to all the components on the requesting packlet.

If the reset request is a local hard reset request, the reset manager generates a hard reset command to all components on the pack and each installed packlet. If the reset request is a remote hard reset request, the reset manager generates a hard reset command to all the components on the requesting packlet. If the reset request is not a power up or hard reset request, a soft reset is required. The reset manager analyses the reset request in order to determine which components require resetting, and then generates a soft reset command to those components.

Integrated test master

The integrated test master (ITM) is a low power integrated multiprotocol processor employing low voltage CMOS technology. The ITM includes 1.0 MByte of FLASH memory, which contains all the code and static data structures for the processor.

Each application specific processor on the pack (the ITM, MPC509 micro-controller, PIGI, local bus controller, and bus arbitrator), as well as the five pulse receiver chips and the pulse transmitter chip, perform a functional built in self test (BIST) in order to determine their operational status. If a persistent fault is detected, the processor (or chip) generates a fault message which is output through the joint test access group (JTAG) bus to the integrated test master (ITM). Upon receipt of the fault message, the ITM generates a fault log, containing the time and date of the fault, symptoms of the fault, location of the fault, and command or request that discovered the fault. The fault log is output through the XI2C bus to the MIM. If the fault is fatal, the ITM also generates a control signal which is output through the XI2C bus to the LEDs, turning off the green LED and turning on the red LED. This control signal is also output through the XI2C bus to the PIGI. A status register on the PIGI is then set to failed, taking the pack out of service.

Whenever a power up or hard reset is performed, the ITM runs a scan test of the pack and each installed packlet, to ensure that the reset components are operating properly. If a fault is detected, the ITM generates a fault log, containing the time and date of the fault, symptoms of the fault, location of the

NTLX03AA/BA (continued)

fault, and command or request that discovered the fault. The fault log is output through the XI2C bus to the MIM. If the fault is fatal, the ITM also generates a control signal which is output through the XI2C bus to the LEDs, turning off the green LED and turning on the red LED. This control signal is also output through the XI2C bus to the PIGI. A status register on the PIGI is then set to failed, taking the pack out of service

The fault log information stored in the MIM can be output to a JTAG device connected to the JTAG bus. This information will assist in testing and repairing defective packs, simplifying the repair process and reducing the number of no fault found (NFF) conditions on packs returned for repair.

MIM

The module information memory (MIM) is a 32 KByte serial electrically erasable programmable memory (EEPROM) device. The MIM is used to store module identification information in the standardized DMS100 format used by all packs and packlets. The MIM contains information identifying product engineering code (PEC), release, serial number, manufacturing date, and pack operating parameters.

The MIM is also used to store fault log information generated by the integrated test master (ITM). The ITM communicates with the MIM over the XI2C bus.

LEDs

Two light emitting diodes (LEDs) are used to indicate the current operational status of the pack. The operational status of the packlet is determined by the integrated test master (ITM). The ITM communicates with each LED over the XI2C bus, causing the LED to turn on or off according to the alarm strategy for XA-Core.

Clock subsystem

The clock subsystem provides stable clock signals to the IOP pack components as well as to each of the installed packlets. A 33 MHz oscillator mounted on the MPC509 micro-controller provides the clock signal for the micro-controller. The 33 MHz clock signal is output by the micro-controller and applied to a low voltage CMOS phase lock loop (PLL) clock driver. The clock driver drives a 33 MHz clock signal through the local bus to the local bus controller. The local bus controller distributes the clock signal through the local bus to the S-SRAM, and through the IOP bus to the PIGI, the integrated test master, and the bus arbitrator. The 33 MHz clock signal received by the bus arbitrator is output through the PCI bus to each of the installed packlets.

The 33 MHz clock signal output by the micro-controller is divided down by two by the PLL clock driver. The resulting 16.7 MHz clock signal is driven out through the local bus to the local bus controller. The local bus controller

distributes the 16.7 MHz clock signal through the IOP bus to the test manager and the reset manager.

The 33 MHz clock signal output by the micro-controller is doubled by the PLL clock driver. The resulting 66 MHz clock signal is then driven out through the local bus to the local bus controller.

Power subsystem

The pack employes a mixed voltage design requiring 5 Vdc and 3.3 Vdc power. The pack receives a pair of -48 Vdc or -60 Vdc office battery power feeds from the XA-Core midplane through the midplane slot connector.

The -48/60 Vdc power fed in through the midplane slot connector is fed out directly to each of the installed packlets through its packlet connector. Each packlet has its own power subsystem capable of converting the -48/60 Vdc power into the required voltages.

The -48/60 Vdc power fed in through the midplane slot connector is passed through a field effect transistor (FET) inrush current limiter, which provides surge protection, common mode filtered by a pair of capacitors and differential mode filtered by a second set of capacitors and then applied to a 3.3 V analog point of use power supply (PUPS). The power transformer in the PUPS steps down the input voltage to 3.3 Vdc. The output voltage is then filtered through an output filter. The resulting 3.3 Vdc @ 25W analog power feeds the five pulse receiver chips (PRCs) and the single pulse transmitter chip (PTC).

The -48/60 Vdc power fed in through the midplane slot connector, passed through the field effect transistor (FET) inrush current limiter, common mode and differential mode filtered, is also applied to a 3.3 V digital point of use power supply (PUPS). The power transformer in the PUPS steps down the input voltage to 3.3 Vdc. The resulting 3.3 Vdc @ 25W digital power feeds all the remaining 3.3 volt components on the IOP pack.

The 3.3 Vdc digital power output by the 3.3 V PUPS is passed through a charge pump, which steps up the power to 5.0 Vdc. The resulting 5.0 Vdc @ 25W digital power feeds the packlet presence circuitry and the packlet isolation peripheral component interconnect (PCI) bus field effect transistor (FET) switches.

A battery monitoring circuit senses the power input from the office battery power feeds. If the monitor detects the loss of one feed, it sends a signal through the XI2C bus to the integrated test master. The integrated test master generates an interrupt message which is passed to the MPC509 micro-controller, informing the micro-controller that one of the two power feeds has been lost.

NTLX03AA/BA (continued)

Technical data

This section describes the technical specifications for the NTLX03AA/BA XA-Core input/output processor (IOP) pack. The specifications include power requirements, pack status light emitting diodes (LEDs), technology, and equipment dimensions.

Power requirements

The power requirements for the XA-Core IOP pack appear in the following table.

Power Requirements

Parameter	Min.	Nom.	Max.
Supply voltage (Vdc)	-36	-48/60	-75
Supply current (Adc)	1.37	2.15	2.94

Status LEDs

The status LEDs are contained on the front of the pack. The LEDs are controlled by two signals from the integrated test master (ITM) and follow the alarm strategy for XA-Core. The LED states for the pack status LEDs appear in the following table.

Pack Status LEDs

Green	Red	External Input Status
Off	Off	Unpowered, LED failure, or not inserted.
On	On	Powerup LED test and pack self-test.
On	Off	Pack should not be removed. It is in service.
Off	On	Alarm state. Pack may be removed.
Off	Wink	Pack is being indicated as faulty. Pack may be removed.

Technology

The NTLX03AA/BA uses surface mount technology where possible. The PUPS and the connectors use through-hole technology. All discrete

NTLX03AA/BA (end)

components, including capacitors and resistors, are installed on the secondary side. The pack is a fourteen layer board employing FR4 material.

Equipment dimensions

The dimensions of the single width NTLX03AA pack are:

- overall height: 300mm (11.81 in.)
- overall depth: 280mm (11.02 in.)
- overall width: 48.7mm (1.92 in.)

The dimensions of the double width NTLX03BA pack are:

- overall height: 300mm (11.81 in.)
- overall depth: 280mm (11.02 in.)
- overall width: 98.7mm (3.89 in.)

This page is left blank intentionally.

NTLX03AB/BB

Product description

The NTLX03AB/BB XA-Core Input/Output Processor (IOP) pack provides a generic platform for all communication and mass storage packlets. The IOP pack also provides a physical interface to the XA-Core midplane. Accordingly, the IOP pack is used to provide connectivity between mass storage and communication packlets and the XA-Core midplane.

The NTLX03AB/BB IOP packs also provide the capability to handle packlet removal and replacement on a hot insertions basis, requiring that only the faulty packlet be made busy (ManB) before removal and replacement.

The single width IOP pack (NTLX03AB)provides a duplicate communications link over optic cable 3 (OC-3) with the installation of the NTLX05AB OC-3 two-port interface packlet. This link is intended primarily as the core to message switch interconnect (CMIC) link.

The single width IOP pack provides reset terminal interface (RTIF) RS-232C, RS-422, and Current Link serial ports with the installation of the NTLX08AA Reset Terminal Interface packlet.

The single width IOP pack can also be used to mount ATM multi-node Data Interface (AMDI) packlets or Ethernet (ETHR) interface packlets for services requiring ATM or IP network access.

The double width IOP pack (NTLX03BB) provides a hard disk interface port and 4.0 GByte hard disk with the installation of the NTLX06AA hard disk packlet.

The double width IOP pack provides a digital audio tape (DAT) interface port and 1.3 GByte, 2.0 GByte, or 4.0 GByte DAT drive with the installation of the NTLX07AA digital audio tape packlet.

Internally, the NTLX03AB IOP pack is identical to the NTLX03BB IOP pack. The ONLY difference between the two is the width of the packaging. The NTLX03AB is a single wide pack (measuring approximately 1.92 in or 48.7 mm in width). The NTLX03BB is a double wide pack (measuring approximately 3.89 in or 98.7 mm in width). The double width is required in order to accommodate the digital audio tape (DAT) drive and/or hard disk drive installed on the pack.

NTLX03AB/BB (continued)

The features of the NTLX03AB/BB pack are as follows:

- provision of a 32-bit multiplexed peripheral component interconnect (PCI) bus for connectivity to the packlet
- provision of a 92-bit multiplexed IOP bus for connectivity to the midplane
- provision of a physical and data interface to the midplane for the installed packlets
- support for all extended architecture interface (XAI) protocol transactions
- provision of a local compute engine based on a Motorola PowerPC509 embedded micro-controller used to handle both internally and externally generated interrupts
- provision of structural and functional built in self testing (BIST) as well as reset logic for the pack and installed packlets
- support for removal and replacement of packlets on a hot insertion basis
- support for live packlet insertion and packlet presence detection
- two alarm light emitting diodes (LEDs)

Location

The single width pack provisioned with a RTIF or a CMIC packlet is installed in slots 04R and 15R on the rear side of the XA-Core midplane assembly. In addition, the single width pack may be installed in any slot position which can accept a processor element (PE) pack. IOP packs with cable bearing packlets should only be installed on the rear side of the XA-Core midplane assembly.

The single width pack provisioned with AMDI or ETHR packlets may be installed in slot positions 5R, 6R, 13R, and 14R (with slot 12R available as an alternate spare).

The double width pack provisioned with a DAT or a Hard Drive is installed in slots 02F-03F and/or slots 17F-18F on the front side of the XA-Core midplane assembly.

Layout

The following figure shows the external configuration of the XA-Core single width input/output processor pack.

NTLX03AB/BB (continued)

NTLX03AB single-width Input/output processor

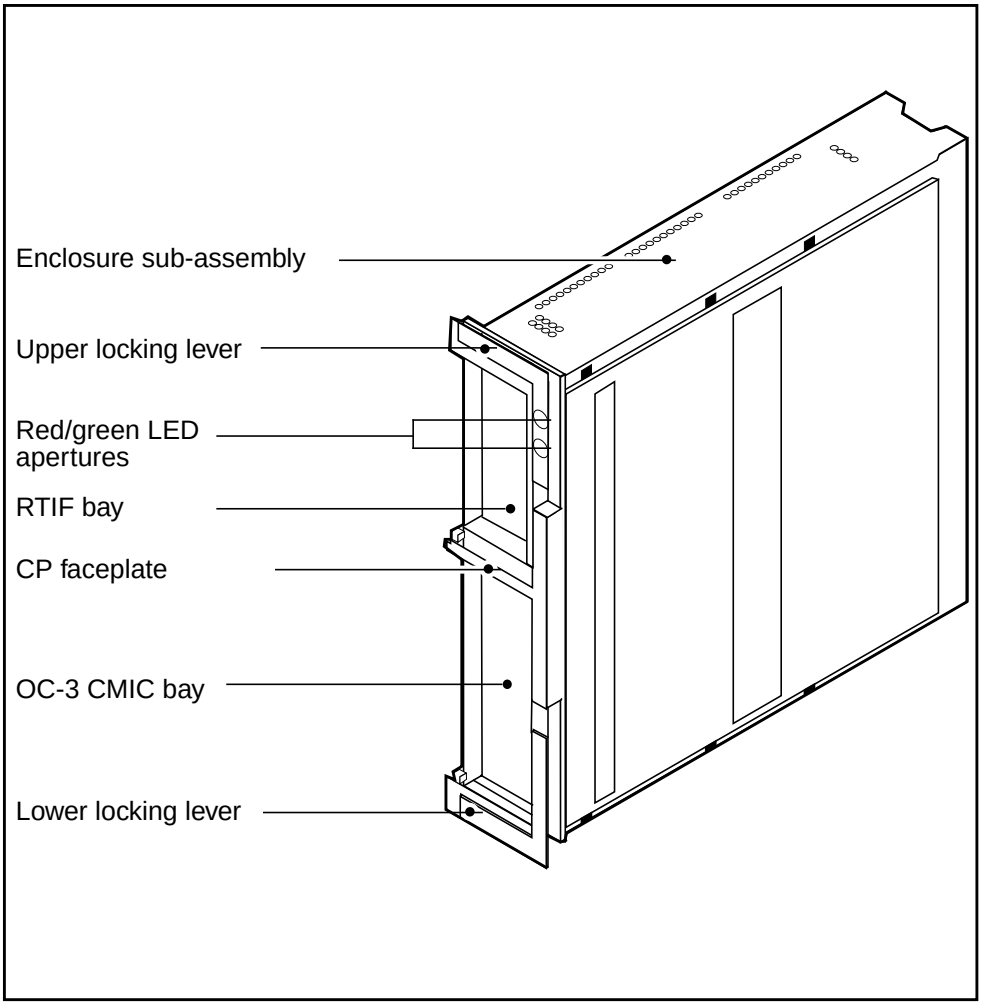

The following figure shows the external configuration of the XA-Core double width input/output processor pack.

NTLX03AB/BB (continued)

NTLX03BB Double width input/output processor

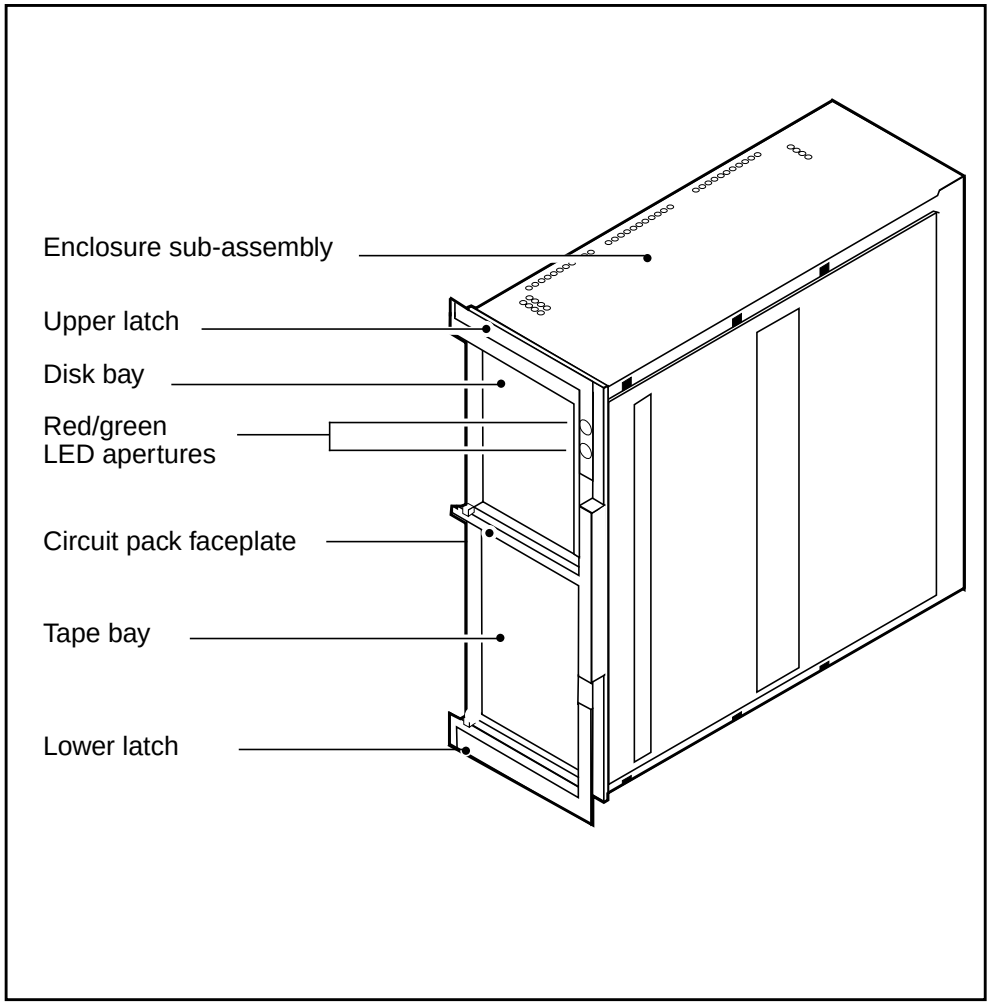

Functional description

The single width XA-Core Input/Output Processor (IOP) pack provides a generic platform for serial (RS-232C, RS-422, and Current Loop) communications and SONET OC-3 core to message switch interconnect (CMIC) communications. The double width XA-Core Input/Output Processor (IOP) pack provides a generic platform for transportable (digital audio tape) and fixed (hard drive) mass storage devices.

The single width IOP pack can also be used to mount ATM multi-node Data Interface (AMDI) packlets or Ethernet (ETHR) interface packlets for services requiring ATM or IP network access.

NTLX03AB/BB (continued)

Each packlet connects to the IOP pack through a 25 pin connector. The IOP pack connects to the XA-Core midplane through a vertical slot connector. Although the double width IOP pack occupies two slot positions on the XA-Core midplane, it connects through one vertical slot connector.

The IOP pack XA-Core midplane interface includes a set of five pulse receiver chips (PRCs) and a single pulse transmitter chip (PTC). It provides connectivity between the XA-Core midplane and the IOP pack, primarily for read/write access to shared memory.

Each pulse receiver chip provides a dedicated data link for two of the up to ten shared memory packs. Each chip receives two 4 GByte/sec links through the midplane from two shared memory packs, each of which is demultiplexed into eight 500 MByte/sec links for use by the IOP pack.

The pulse transmitter chip provides a dedicated data link to all installed shared memory packs. The chip receives eight 500 MBytes/sec links, which are multiplexed into two 1GByte/sec links and transmitted, via the midplane, to all shared memory packs.

In the outgoing (transmit) direction, the XAI protocol signal output by a pair of shared memory packs over the midplane is received by one of the pulse receiver chips, which demultiplexes the signal and outputs a PECL compatible signal to a processor interface to gigabit interconnect (PIGI) midplane interface controller. The PIGI outputs the signal received from the pulse receiver chip through the IOP bus to a bus arbitrator. The bus arbitrator checks the address and parity, seizes ownership of the peripheral component interconnect (PCI) bus, and then outputs the signal through the PCI bus to the addressed packlet.

In the incoming (receive) direction, the signal output by a packlet through the PCI bus is received by a bus arbitrator. The bus arbitrator seizes ownership of the IOP bus and then outputs the signal through the IOP bus to a processor interface to gigabit interconnect (PIGI) midplane interface controller. The PIGI seizes ownership of the midplane, applies XAI protocol to the received signal, checks parity and then applies the signal to a pulse transmitter chip. The pulse transmitter chip multiplexes the signal and then transmits the multiplexed XAI protocol signal over the midplane to all shared memory packs.

NTLX03AB/BB (continued)

Functional blocks

The pack consists of the following functional blocks:

- Midplane interface (I/F)
- Bus arbitrator
- Local bus controller
- MPC509 micro-controller
- Flash memory
- Synchronous static random access memory (S-SRAM)
- Packlet presence and isolation
- Reset manager
- Integrated test master
- Clock subsystem
- Power subsystem

The following figure shows the relationship between the functional blocks.

NTLX03AB/BB (continued)

NTLX03AB/BB functional blocks

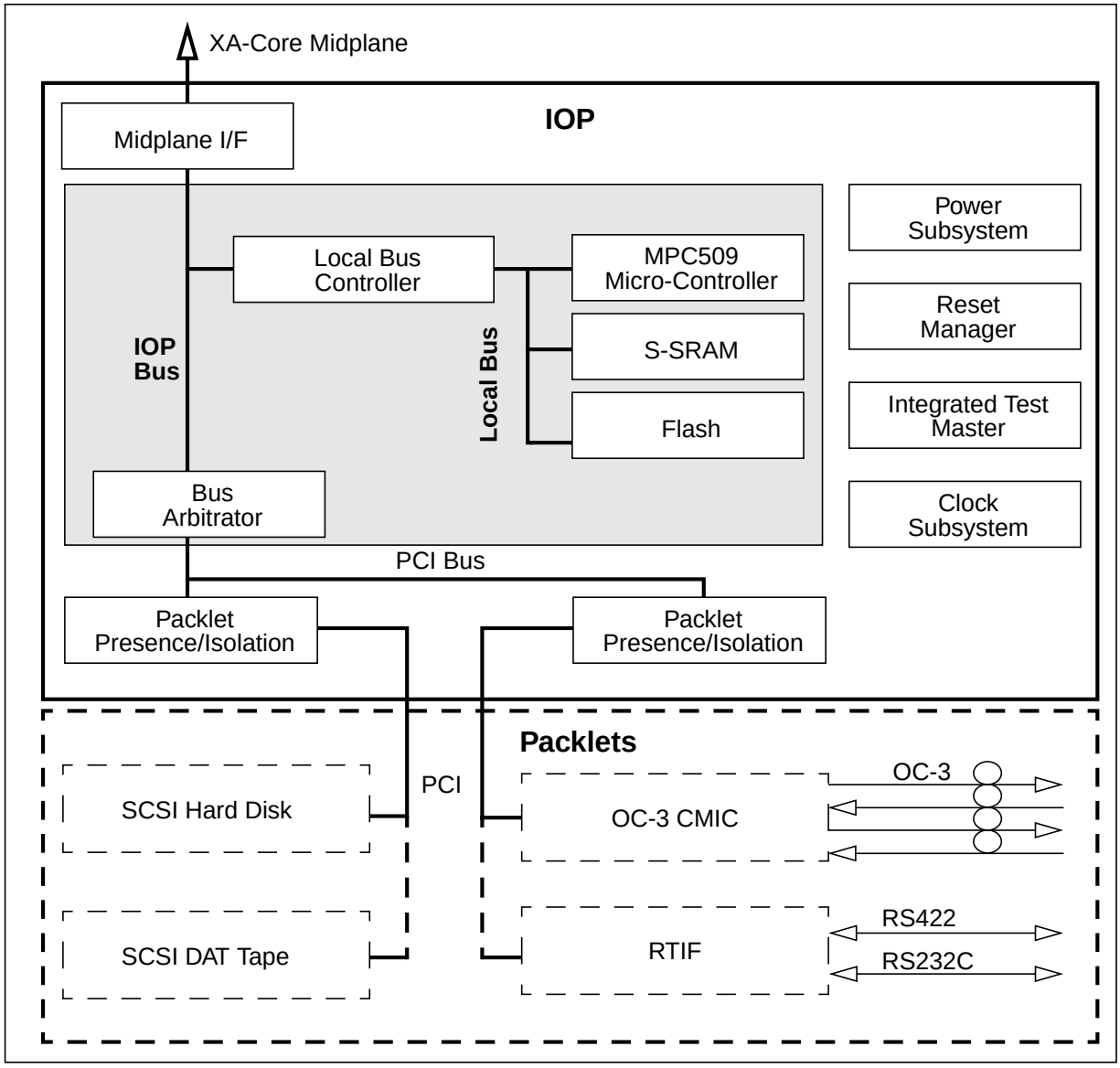

Midplane interface

The midplane interface consists of a set of five pulse receiver chips (PRCs), a single pulse transmitter chip (PTC), and a processor interface to gigabit interconnect (PIGI) midplane interface controller. It provides connectivity between the XA-Core midplane and the IOP pack, primarily for read/write access to shared memory.

NTLX03AB/BB (continued)

Each pulse receiver chip (PRC) is a 256 super ball grid array (SBGA) transceiver employing low voltage. 0.5 micron BICMOS technology. Each pulse receiver chip provides a dedicated data link for two of the up to ten shared memory packs. The chip receives two 4 GByte/sec links through the midplane from two shared memory packs, each of which is demultiplexed into eight 500 MByte/sec links and transmitted, at differential PECL compatible levels, to the PIGI.

The pulse transmitter chip (PTC) is a 168 super ball grid array (SBGA) transceiver employing low voltage. 0.5 micron BICMOS technology. The pulse transmitter chip provides a dedicated data link to all installed shared memory packs. The chip receives four 500 MBytes/sec links from the PIGI, which are multiplexed into two 1GByte/sec links and transmitted, via the midplane, to all shared memory packs.

The processor interface to gigabit interconnect (PIGI) midplane interface controller is an application specific integrated circuit (ASIC) 624 pin column grid array (CGA) employing low voltage CMOS5S technology. The PIGI is used to arbitrate all read and write operations between the midplane (and thus shared memory) and the IOP pack.

The PIGI supports all extended architecture (XAI) protocol transactions, including reset commands and external interrupts. The PIGI also detects faults in shared memory and in the midplane. Faults in shared memory are detected by matching duplicated data signals received from shared memory. Faults in the midplane are detected by cycle redundancy checking the incoming data signals. When a fault is detected, the PIGI inhibits the operation of the pulse transmitter chip (PTC) and does not allow the PTC to return to operation until the fault has been cleared.

In the outgoing (transmit) direction, the XAI protocol signals output by a pair of shared memory packs over the midplane are received by one of the pulse receiver chips, which demultiplexes the signals and outputs a PECL compatible signal to the PIGI. The PIGI outputs the signal received from the pulse receiver chip through the IOP bus to the bus arbitrator.The bus arbitrator checks the address and parity, seizes ownership of the peripheral component interconnect (PCI) bus, and then outputs the signal through the PCI bus to the addressed packlet.

In the incoming (receive) direction, the signal output by a packlet through the PCI bus is received by the bus arbitrator. The bus arbitrator obtains ownership of the IOP bus from the local bus controller and then outputs the signal over the IOP bus to the PIGI. The PIGI obtains ownership of the midplane, applies XAI protocol to the received signal, checks parity and then applies the signal to the pulse transmitter chip. The pulse transmitter chip multiplexes the signal

and then transmits the multiplexed XAI protocol signal over the midplane to all shared memory packs.

Bus arbitrator

The bus arbitrator is an application specific integrated circuit (ASIC) plastic ball grid array (BGA) employing low voltage 3.3V CMOS technology. It is effectively the bridge between the packlet 32 bit wide PCI bus and the IOP pack 92 bit wide IOP bus. The bus arbitrator permits packlets to burst data into shared memory through the PIGI.

The bus arbitrator provides arbitration for and ownership of the PCI bus among three contending resources (the two installed packlets and the bus arbitrator itself). In the case of multiple simultaneous PCI bus ownership requests, the bus arbitrator grants ownership according to a specific round robin checking order (bus arbitrator then lower packlet then upper packlet) starting at the first resource following the one which was last granted bus ownership.

The bus arbitrator includes a 256 byte dual-port first in/first out (FIFO) buffer. This dual-port buffer provides 256 bytes of buffering for the simultaneous PCI burst reads and burst writes through the IOP bus.

In the outgoing (transmit) direction, the signal output by the PIGI through the IOP bus is received into the bus arbitrator FIFO buffer. The bus arbitrator then seizes control of the PCI bus, checks address and parity, and outputs the signal through the PCI bus to the addressed packlet.

In the incoming (receive) direction, the signal output by a packlet through the PCI bus is received into the bus arbitrator FIFO buffer. The bus arbitrator then requests ownership of the IOP bus from the local bus controller. Once IOP bus ownership has been granted by the local bus controller, address and parity are checked and the signal is then output through the IOP bus to the PIGI, which transmits the signal over the midplane to shared memory.

Local bus controller

The local bus controller is a multi function programmable 352 pin super ball grid array (SBGA) employing low voltage 3.3V CMOS technology. It is effectively the bridge between the 92 bit IOP bus and the 64 bit local bus. The local bus controller utilizes a set of bi-directional transceivers to couple the IOP bus to the local bus.

The local bus controller provides arbitration for and ownership of the IOP bus between three contending resources (the bus arbitrator, the PIGI, and the MPC509 micro-controller) In the case of multiple simultaneous IOP bus ownership requests, the local bus controller grants ownership according to a specific round robin checking order (micro-controller then PIGI then bus

NTLX03AB/BB (continued)

arbitrator) starting at the first resource following the one which was last granted bus ownership.

The local bus controller performs the bus protocol conversion required in order for the MPC509 micro-processor to access the IOP bus, and the bus protocol conversion required in order for the bus arbitrator and the PIGI to access the local bus (and thus the MPC509 micro-controller).

The local bus controller acts as memory controller for both S-SRAM and FLASH memory, providing access to FLASH memory as well as access to S-SRAM by the MPC509 micro-controller. The micro-controller exercises continual ownership of the local bus.

In the incoming (receive) direction, control signals output by the PIGI or the bus arbitrator through the IOP bus are applied to the receive section of a bi-directional transceiver on the local bus controller. The signal is converted from a 64 bit data signal to a 32 bit data signal. The converted signal is applied to the transmitter section of the transceiver, which outputs the signal through the local bus to the MPC509 micro-controller.

In the outgoing (transmit) direction, control signals output by the micro-controller through the local bus are applied to the receive section of a bi-directional transceiver on the local bus controller. The signal is converted from a 32 bit data signal to a 64 bit data signal. Address and parity are checked and the converted signal is then applied to the transmitter section of the transceiver, which outputs the signal through the IOP bus to the addressee (the PIGI or the bus arbitrator).

MPC509 micro-controller

The Motorola PowerPC 509 embedded 33 MHz micro-controller is a reduced instruction set computer (RISC) employing advanced, low voltage CMOS technology integrating the functionality required to initialize, monitor, and control the operation of the components on the IOP pack as well as those on the installed packlets. The primary task of the micro-controller is to filter interrupts generated by the IOP hardware and its installed packlets and respond by issuing the appropriate instructions.

The MPC509 micro-controller fetches its code from FLASH memory upon bootup and uses the S-SRAM as code space and data store during regular operation.

The core of the MPC509 micro-controller is its interrupt controller, which can service up to seven external interrupt sources. Four of these are of fixed priority, while the remaining three are firmware programmable. Once an

interrupt has been received and analyzed, the micro-controller will issue the appropriate response in the form of one or more sequential instructions.

Interrupts generated by the PIGI or interrupts generated on the processing element (PE) pack and transmitted to the PIGI over the midplane are output through the IOP bus to the local bus controller. Interrupts generated by the bus arbitrator or interrupts generated on an installed packlet and transmitted to the bus arbitrator over the PCI bus are output through the IOP bus to the local bus controller. Each interrupt received by the local bus controller is output through the local bus to the MPC509 micro-controller. Fetching its code and required data from S-SRAM, the micro-controller analyses the interrupt to determine the appropriate response. A set of one or more sequential instructions are then output through the local bus to the local bus controller. The local bus controller checks the address on the instruction and then outputs the instruction through the IOP bus to the addressed component.

FLASH memory

The FLASH memory is a 512K x 16 bit non-volatile memory configured as two independent memory banks of 256K x 16 bit. Each memory bank contains all the code and static data structures for the MPC509 micro-controller. This allows the micro-controller to execute out of one FLASH memory bank while the second is being updated.

In order to benefit from faster access times, much of the code is copied from FLASH memory to the SRAM by the micro-controller upon bootup or reset, so that all subsequent code and data fetches will be from the S-SRAM.

S-SRAM

The synchronous static random access memory (S-SRAM) is a 512K x 36 bit static random access memory ball grid array (BGA) device which permits parity checking.

The S-SRAM is used to store code for the MPC509 micro-controller. This code is copied from FLASH memory to the S-SRAM by the micro-controller upon bootup or reset so that all subsequent code and data fetches will be from the S-SRAM. This allows the micro-controller to benefit from faster access times relative to execution out of FLASH memory.

Packlet presence

The packlet presence circuit consists of a capacitor, a pair of resistors and a diode. With no packlet inserted, the circuit receives no power from the packlet. When a packlet is inserted, power from the packlet is fed into the packlet presence circuit, causing a presence signal to be sent through the PCI bus and the IOP bus to the local bus controller. The local bus controller generates an interrupt message which is output to the MPC509 micro-controller, informing

NTLX03AB/BB (continued)

the micro-controller that a packlet has been inserted. The packlet is initialized and data can then be sent to and received from the packlet.

When a packlet is removed, power from the packlet is removed from the packlet presence circuit, causing a event signal to be sent through the PCI bus and the IOP bus to the local bus controller. The local bus controller generates an interrupt message which is output to the MPC509 micro-controller, informing the micro-controller that a packlet has been removed. Data will now be inhibited from being sent to and received from the packlet.

Packlet isolation

The packlet isolation circuit consists of a set of field effect transistor (FET) switches installed in series with the PCI bus. During normal operation, the switches are turned on, allowing access to the PCI bus. The local bus controller monitors the operational status of the PCI bus. If it detects PCI bus corruption, it turns off the FET switches, prohibiting access to the PCI bus, thus isolating the packlet.

When a packlet becomes faulty, the packlet generates a fault message which is output through the joint test access group (JTAG) bus to the integrated test master (ITM). Upon receipt of the fault message, the ITM generates an interrupt message which is passed to the MPC509 micro-controller, informing the micro-controller that a packlet has become faulty. The micro-controller generates a control signal which is passed to the local bus controller, causing the local bus controller to turn off the FET switches, thus prohibiting access to the PCI bus and isolating the faulty packlet.

Reset manager

The reset manager is a low voltage CMOS programmable logic device (CPLD) used to collect and analyze all reset requests as well as issue the appropriate reset command. All reset requests and reset commands are transmitted over a two wire serial XI2C bus.

The IOP pack implements three levels of reset severity: power up reset, hard reset, and soft reset. Power up and hard resets perform structural tests, fully initialize all the components on the IOP pack and/or the installed packlets, and begin execution of each component’s firmware. Soft resets preserve the current contents of all random access memories as well as control and status information. A soft reset re-initializes selective components on the IOP pack and/or the installed packlets, and begins execution of those components’ firmware.

Local reset requests can originate from the PIGI, the integrated test master (ITM), the MPC509 micro-controller, or the battery monitoring circuit. Such requests are sent through the XI2C bus to the reset manager. Remote reset

requests can originate from a packlet installed in the IOP pack. Such requests are sent through the XI2C bus to the reset manager. Reset requests can also originate from a shared memory pack. Such requests are sent through the XA-Core midplane to the PIGI, which forwards the request as a local reset request to the reset manager through the XI2C bus.

Once a reset request has been received by the reset manager, it is analyzed to determine whether a power up reset, a hard reset, or a soft reset is required. If the reset request is a local power up reset request, the reset manager generates a power up reset command to all components on the pack and each installed packlet. If the reset request is a remote power up reset request, the reset manager generates a power up reset command to all the components on the requesting packlet.

If the reset request is a local hard reset request, the reset manager generates a hard reset command to all components on the pack and each installed packlet. If the reset request is a remote hard reset request, the reset manager generates a hard reset command to all the components on the requesting packlet. If the reset request is not a power up or hard reset request, a soft reset is required. The reset manager analyses the reset request in order to determine which components require resetting, and then generates a soft reset command to those components.

Integrated test master

The integrated test master (ITM) is a low power integrated multiprotocol processor employing low voltage CMOS technology. The ITM includes 1.0 MByte of FLASH memory, which contains all the code and static data structures for the processor.

Each application specific processor on the pack (the ITM, MPC509 micro-controller, PIGI, local bus controller, and bus arbitrator), as well as the five pulse receiver chips and the pulse transmitter chip, perform a functional built in self test (BIST) in order to determine their operational status. If a persistent fault is detected, the processor (or chip) generates a fault message which is output through the joint test access group (JTAG) bus to the integrated test master (ITM). Upon receipt of the fault message, the ITM generates a fault log, containing the time and date of the fault, symptoms of the fault, location of the fault, and command or request that discovered the fault. The fault log is output through the XI2C bus to the MIM. If the fault is fatal, the ITM also generates a control signal which is output through the XI2C bus to the LEDs, turning off the green LED and turning on the red LED. This control signal is also output through the XI2C bus to the PIGI. A status register on the PIGI is then set to failed, taking the pack out of service.

NTLX03AB/BB (continued)

Whenever a power up or hard reset is performed, the ITM runs a scan test of the pack and each installed packlet, to ensure that the reset components are operating properly. If a fault is detected, the ITM generates a fault log, containing the time and date of the fault, symptoms of the fault, location of the fault, and command or request that discovered the fault. The fault log is output through the XI2C bus to the MIM. If the fault is fatal, the ITM also generates a control signal which is output through the XI2C bus to the LEDs, turning off the green LED and turning on the red LED. This control signal is also output through the XI2C bus to the PIGI. A status register on the PIGI is then set to failed, taking the pack out of service

The fault log information stored in the MIM can be output to a JTAG device connected to the JTAG bus. This information will assist in testing and repairing defective packs, simplifying the repair process and reducing the number of no fault found (NFF) conditions on packs returned for repair.

MIM

The module information memory (MIM) is a 32 KByte serial electrically erasable programmable memory (EEPROM) device. The MIM is used to store module identification information in the standardized DMS100 format used by all packs and packlets. The MIM contains information identifying product engineering code (PEC), release, serial number, manufacturing date, and pack operating parameters.

The MIM is also used to store fault log information generated by the integrated test master (ITM). The ITM communicates with the MIM over the XI2C bus.

LEDs

Two light emitting diodes (LEDs) are used to indicate the current operational status of the pack. The operational status of the packlet is determined by the integrated test master (ITM). The ITM communicates with each LED over the XI2C bus, causing the LED to turn on or off according to the alarm strategy for XA-Core.

Clock subsystem

The clock subsystem provides stable clock signals to the IOP pack components as well as to each of the installed packlets. A 33 MHz oscillator mounted on the MPC509 micro-controller provides the clock signal for the micro-controller. The 33 MHz clock signal is output by the micro-controller and applied to a low voltage CMOS phase lock loop (PLL) clock driver. The clock driver drives a 33 MHz clock signal through the local bus to the local bus controller. The local bus controller distributes the clock signal through the local bus to the S-SRAM, and through the IOP bus to the PIGI, the integrated test master, and the bus arbitrator. The 33 MHz clock signal received by the bus arbitrator is output through the PCI bus to each of the installed packlets.

The 33 MHz clock signal output by the micro-controller is divided down by two by the PLL clock driver. The resulting 16.7 MHz clock signal is driven out through the local bus to the local bus controller. The local bus controller distributes the 16.7 MHz clock signal through the IOP bus to the test manager and the reset manager.

The 33 MHz clock signal output by the micro-controller is doubled by the PLL clock driver. The resulting 66 MHz clock signal is then driven out through the local bus to the local bus controller.

Power subsystem

The pack employes a mixed voltage design requiring 5 Vdc and 3.3 Vdc power. The pack receives a pair of -48 Vdc or -60 Vdc office battery power feeds from the XA-Core midplane through the midplane slot connector.

The -48/60 Vdc power fed in through the midplane slot connector is fed out directly to each of the installed packlets through its packlet connector. Each packlet has its own power subsystem capable of converting the -48/60 Vdc power into the required voltages.

The -48/60 Vdc power fed in through the midplane slot connector is passed through a field effect transistor (FET) inrush current limiter, which provides surge protection, common mode filtered by a pair of capacitors and differential mode filtered by a second set of capacitors and then applied to a 3.3 V analog point of use power supply (PUPS). The power transformer in the PUPS steps down the input voltage to 3.3 Vdc. The output voltage is then filtered through an output filter. The resulting 3.3 Vdc @ 25W analog power feeds the five pulse receiver chips (PRCs) and the single pulse transmitter chip (PTC).

The -48/60 Vdc power fed in through the midplane slot connector, passed through the field effect transistor (FET) inrush current limiter, common mode and differential mode filtered, is also applied to a 3.3 V digital point of use power supply (PUPS). The power transformer in the PUPS steps down the input voltage to 3.3 Vdc. The resulting 3.3 Vdc @ 25W digital power feeds all the remaining 3.3 volt components on the IOP pack.

The 3.3 Vdc digital power output by the 3.3 V PUPS is passed through a charge pump, which steps up the power to 5.0 Vdc. The resulting 5.0 Vdc @ 25W digital power feeds the packlet presence circuitry and the packlet isolation peripheral component interconnect (PCI) bus field effect transistor (FET) switches.

A battery monitoring circuit senses the power input from the office battery power feeds. If the monitor detects the loss of one feed, it sends a signal through the XI2C bus to the integrated test master. The integrated test master

NTLX03AB/BB (continued)

generates an interrupt message which is passed to the MPC509 micro-controller, informing the micro-controller that one of the two power feeds has been lost.

Technical data

This section describes the technical specifications for the NTLX03AB/BB XA-Core input/output processor (IOP) pack. The specifications include power requirements, pack status light emitting diodes (LEDs), technology, and equipment dimensions.

Power requirements

The power requirements for the XA-Core IOP pack appear in the following table.

Power Requirements

Parameter	Min.	Nom.	Max.
Supply voltage (Vdc)	-36	-48/60	-75
Supply current (Adc)	1.37	2.15	2.94

Status LEDs

The status LEDs are contained on the front of the pack. The LEDs are controlled by two signals from the integrated test master (ITM) and follow the alarm strategy for XA-Core. The LED states for the pack status LEDs appear in the following table.

Pack Status LEDs

Green	Red	External Input Status
Off	Off	Unpowered, LED failure, or not inserted.
On	On	Powerup LED test and pack self-test.
On	Off	Pack should not be removed. It is in service.
Off	On	Alarm state. Pack may be removed.
Off	Wink	Pack is being indicated as faulty. Pack may be removed.

NTLX03AB/BB (end)

Technology

The NTLX03AB/BB uses surface mount technology where possible. The PUPS and the connectors use through-hole technology. All discrete components, including capacitors and resistors, are installed on the secondary side. The pack is a fourteen layer board employing FR4 material.

Equipment dimensions

The dimensions of the single width NTLX03AB pack are:

- overall height: 300mm (11.81 in.)
- overall depth: 280mm (11.02 in.)
- overall width: 48.7mm (1.92 in.)

The dimensions of the double width NTLX03BB pack are:

- overall height: 300mm (11.81 in.)
- overall depth: 280mm (11.02 in.)
- overall width: 98.7mm (3.89 in.)

This page is left blank intentionally.

NTLX04

Product description

The NTLX04 high performance input/output (HIOP) circuit pack is a unitary circuit pack. It does not house packlets as the NTLX03 circuit pack does. The HIOP CP contains on-board components to support links. The following table lists the types of links supported by the NTLX04AA, NTLX04BA, and NTLX04CA versions of the HIOP.

Links supported by the AA, BA, and CA versions of the HIOP

	Supports Ethernet links	Supports ATM multi-node data interface (AMDI) links
NTLX04AA	Yes	No
NTLX04BA	Yes	Yes
NTLX04CA	Yes	Yes

Note 1: The RTIF section and its RS-232 ports are not used.

Note 2: The AA and BA versions of the HIOP circuit pack can co-exist in the same XA-Core. However, the NTLX04CA cannot co-exist with the other versions. For details, see the replacement procedure for the HIOP circuit pack, in the *XA-Core Maintenance Manual*, 297-8991-510.

Note 3: Manufacture of the NTLX04AA was discontinued as of March 31, 2004. Manufacture of the NTLX04BA was discontinued as of the same date.

The HIOP provides the following features

- 10/100 Mb/s ethernet link via its ethernet port (NTLX04AA and NTLX04BA)
- a pair of ATM (asynchronous transfer mode) ports with SONET OC-3 links that work in load-sharing mode (NTLX04BA and NTLX04CA)

The connector on the ethernet section of the HIOP is an RJ-45 jack.

If HIOP circuit packs support a certain type of links (ethernet or AMDI), then packlets are not used to support links of the same type. It is not permitted to use a mixture of packlets and HIOPs for the same link application.

Location

HIOP circuit packs install in slots 5R and 14R. If NTLX04CA versions are used, then two or four HIOPs can be installed. If four are installed, they install in slots 5R, 6R, 13R, and 14R.

NTLX04 (continued)

Layout

The following figure shows the external configuration of the high performance input/output processor circuit pack.

NTLX04 high performance input/output circuit pack front and side views

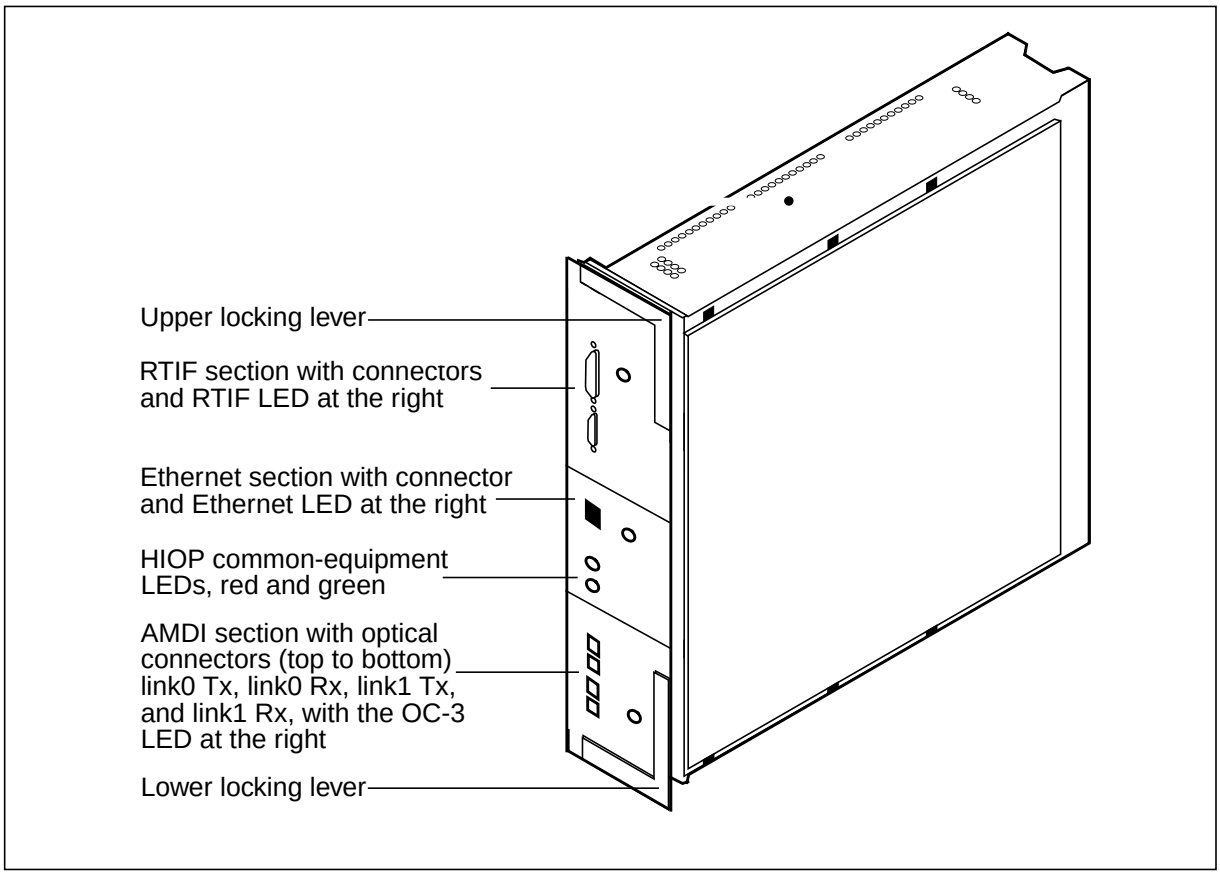

NTLX04 (continued)

Functional description

The main features of the HIOP CP are

- ATM. SONET OC-3 functionality and ATM controller (NTLX04BA).
- Fast ethernet interface block. Supports fast ethernet port 10/100BASE-TX.
- PQII - MPC8260 communications processor. This is the communication processor for the I/O interfaces.
- PPC - MPC7400 processor. This is the core engine of the CP.
- RHINO memory controller.
- External arbiter. Arbitrates among the devices that can command control of the bus: the MPC8260 processor, the MPC7400 processor, and PIGI. The arbiter also handshakes with RHINO.
- SDRAM block.
- FLASH memory block.
- PIGI (processor interface to gigabit interconnect). This is a logical layer on top of the XAI. It makes the XAI transparent to the core logic.
- XAI (XA-interconnect) interface block. XAI provides very high speed transmit and receive channels between the HIOP CP and the shared memory CPs in the XA-Core.
- Test block. The test block executes board-level tests after power-up, after hard resets, and when requested by system maintenance software.
- Power block.

NTLX04 (continued)

The following figure shows the relationships among the functional blocks.

NTLX04 block diagram

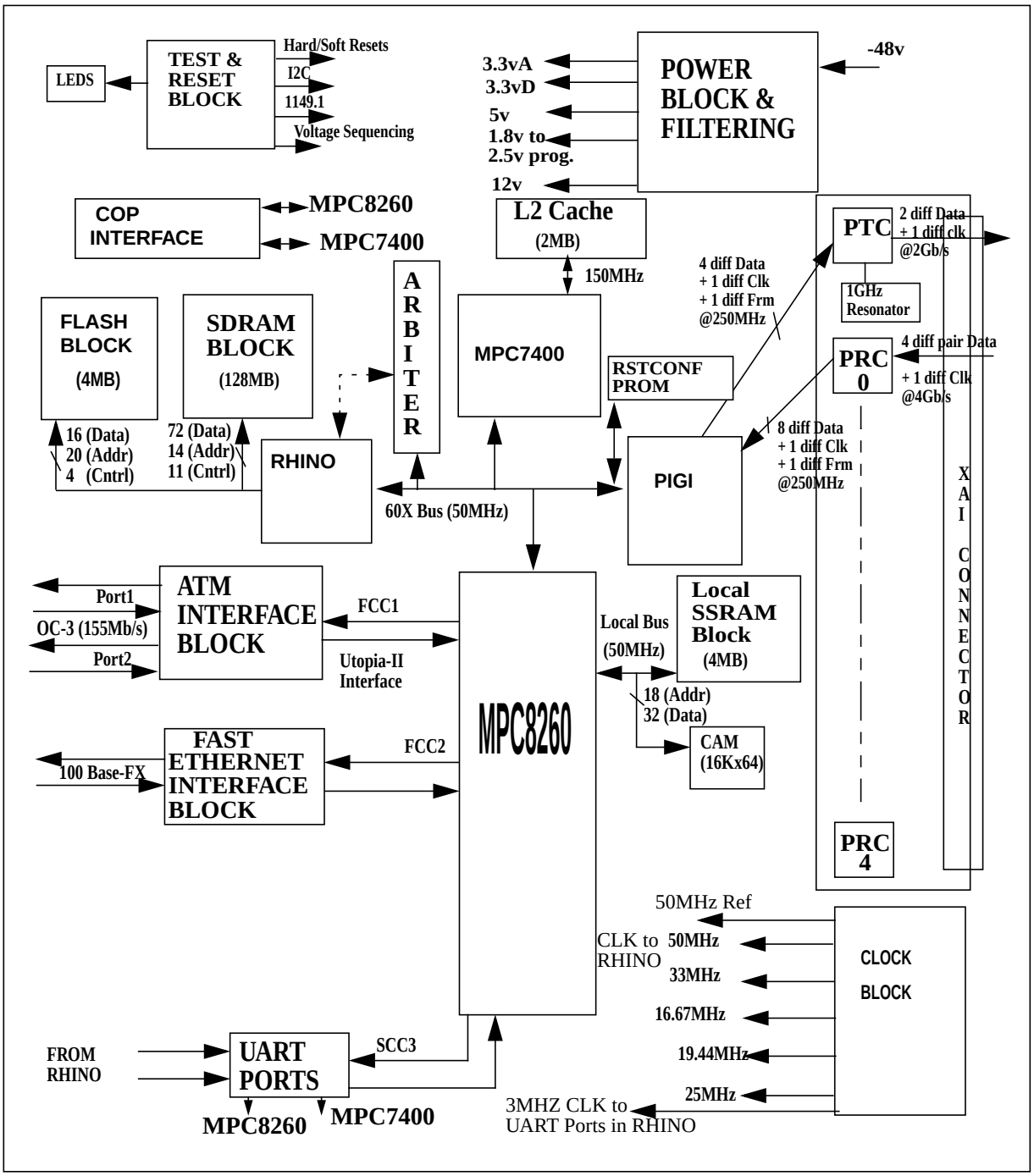

Technical data

This section describes the technical specifications for the NTLX04 high performance input/output processor (HIOP) circuit pack. The specifications include power requirements, pack status light emitting diodes (LEDs), technology, and equipment dimensions.

Power requirements

The power requirements for the HIOP circuit pack appear in the following table.

Power Requirements

Parameter	Min.	Nom.	Max.
Supply voltage (Vdc)	-37	-48	-75
Supply current (Adc)	2.8	2.1	1.4

Status LEDs

There are five LEDs on the front of the circuit pack, one green, one red, and three amber.

The red and green LEDs are the common-equipment LEDs. They indicate the status of the circuit pack, as listed in the following table.

Pack Status LEDs

Green	Red	External Input Status
Off	Off	Unpowered, LED failure, or not inserted.
On	On	Powerup or card reset LED test and pack self-test.
On	Off	Pack should not be removed. It is in service.
Off	On	Alarm state. Pack may be removed.
Off	Wink	Pack is being indicated as faulty. Pack may be removed.

NTLX04 (end)

The amber LEDs are on the RTIF, ethernet, and OC-3 sections of the HIOP. Each amber LED indicates link status, as listed in the following table.

Link Status LEDs

Amber	External Input Status
Off	All I/O interfaces that are currently provisioned appear to be receiving a valid signal.
On	The interface does not appear to be carrying a valid signal.

Technology

The components used in the NTLX04 are mainly surface-mount. Some through-hole devices are used. The XAI connector is press-fit on the board.Most of the components mounted on the secondary side of the circuit board are passive devices. Exceptions include some protection devices (transistors, diodes) with low power dissipation. The pack is a sixteen layer board employing FR4 material.

Equipment dimensions

The dimensions of the NTLX04AA circuit pack are:

- overall height: 300mm (11.81 in.)
- overall depth: 280mm (11.02 in.)
- overall width: 48.7mm (1.92 in.)

NTLX05AA

Product description

The NTLX05 XA-Core OC-3 (Optical Carrier) two-port interface packlet provides the core to message switch interconnect (CMIC) link between the XA-Core shelf and the Message Switch shelf.

> ***Note:*** The NTLX05AA version of the OC-3 (Optical Carrier) two-port interface packlet is supported only in releases up to and including CSP13.

The packlet is installed on the NTLX03AA/AB XA-Core Input/Output processor (IOP) pack and connects through fiber optic cable to the NT9X63AA/AB Message Switch OC-3 two-port interface paddle board installed in the Message Switch shelf.

The signal protocol used across the OC-3 links connecting the packlet (in the XA-Core) and the paddle board (in the Message Switch) is reliable data exchange protocol (RDEP).

The packlet provides a pair of ATM (asynchronous transfer mode) ports with SONET OC-3 links, used as the CMIC links of the XA-Core. These links use the following protocols:

- the ATM physical layer according to the ATM Forum User Network Interface Specification and ITU-T Recommendation I.432
- the ATM Adaptation Layer Type 5 (AAL-5) for Broadband ISDN according to ITU-T Recommendation I.363
- a subset of the lower half of the Service Specific Convergence Sublayer - the Reliable Data Exchange Protocol (RDEP) as described by the ITU-T document Q.2110

The features of the NTLX05AB packlet are as follows:

- termination of a pair of SONET OC-3 links
- optical to electrical signal conversion (OC-3 to STS-3C)
- termination of the ATM layer
- termination of the AAL5 Segmentation and Reassembly Sublayer
- termination of the lower half of a subset of the Service Specific Convergence Sublayer
- reception of a dedicated channel that contains time of day (TOD) synchronization information
- transmission of out of band (OOB) messages

NTLX05AA (continued)

- built in self test (BIST) fault detection, isolation, and reporting
- provision of a 32-bit multiplexed peripheral component interconnect (PCI) bus for connectivity to the IOP pack

Location

The packlet is installed in the lower packlet position of a single width NTLX03AA/AB XA-Core Input/Output processor (IOP) pack. The IOP pack is installed in slots 04R and 15R on the rear side of the XA-Core midplane assembly.

Layout

The following figure shows the external appearance of the XA-Core OC-3 two-port interface packlet.

NTLX05AB OC-3 two-port interface packlet

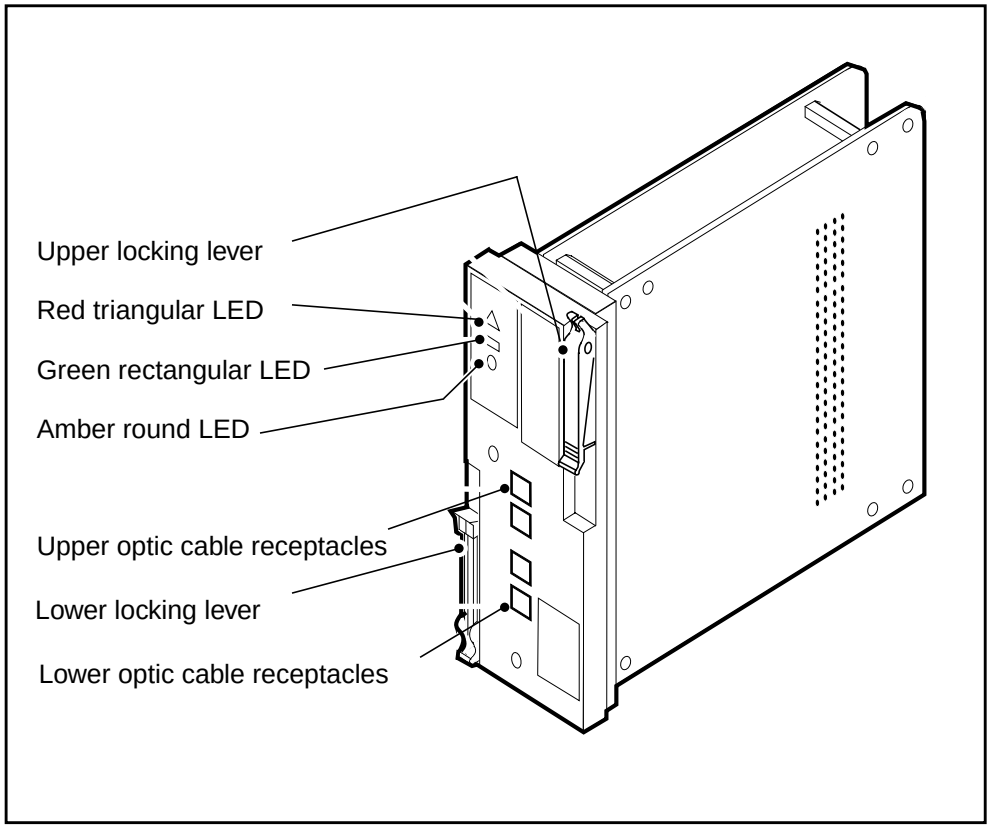

Functional description

The XA-Core OC-3 two-port interface packlet provides a duplicated communication link over OC-3 optical fiber. This link provides the core to

message switch interconnect (CMIC) link between the XA-Core shelf and the Message Switch shelf.

The packlet connects through fiber optic cable to the NTL9X63AA/AB Message Switch OC-3 two-port interface paddle board installed in the Message switch shelf.

In the outgoing (transmit) direction, the serial signals output by the IOP pack through the IOP connector over the PCI bus to a Prefetcher are output by the Prefetcher through the local bus to a transmit buffer in the Intel i960 microprocessor's on-board synchronous static random access memory (S-SRAM). An Intel i960 microprocessor reads out the serial signals from the buffer, converts the serial signals to reliable data exchange protocol (RDEP) signals, and then writes the RDEP signals into a local asynchronous transfer mode segmentation and reassembly (LASAR) transmit buffer in S-SRAM. The LASAR device constantly monitors the state of its transmit buffer, and when the RDEP signals appear, the LASAR will read out the RDEP signals, which it then segments into a synchronous transport signal (STS-3C) message packet. The STS-3C message packet is output to an optical transceiver. The transmitter section of the optical transceiver converts the electrical STS-3C signals to optical carrier (OC-3) signals which are then transmitted through the fiber optic cable to the NT9X63AA/AB XA-Core OC-3 two-port interface paddle board installed on the Message Switch.

In the incoming (receive) direction, ATM over SONET OC-3 message packet signals are received from the NT9X63AA/AB XA-Core OC-3 two-port interface paddle board installed in the Message Switch by an optical transceiver. The receiver section of the optical transceiver converts the SONET OC-3 optical signals to SONET STS-3 electrical signals which are then output to a LASAR. The LASAR reassembles the message packet received from the optical transceiver and outputs the resulting reliable data exchange protocol (RDEP) signals through the PCI bus and the local bus directly to a receive buffer in the Intel i960 microprocessor's on-board S-SRAM. The microprocessor then informs the Prefetcher, by a write pointer update, that there are signals in the Prefetcher receive buffer. Upon receiving the pointer update, the Prefetcher reads out the serial signals from the buffer and outputs them through the PCI bus to the IOP connector (and on through the IOP pack and the XA-Core midplane to the appropriate shared memory pack).

Functional blocks

The packlet consists of the following functional blocks:

- Optical transceiver
- LASAR semi-conductor

NTLX05AA (continued)

- 19.44 MHz Oscillator
- Intel i960 microprocessor
- FLASH memory
- synchronous static random access memory (S-SRAM)
- Prefetcher field programmable gate array (FPGA)
- VADER time of day (TOD) field programmable gate array (FPGA)
- Module information memory (MIM)
- Light emitting diodes (LEDs)
- Power subsystem

The following figure shows the relationship between the functional blocks.

NTLX05AB functional blocks

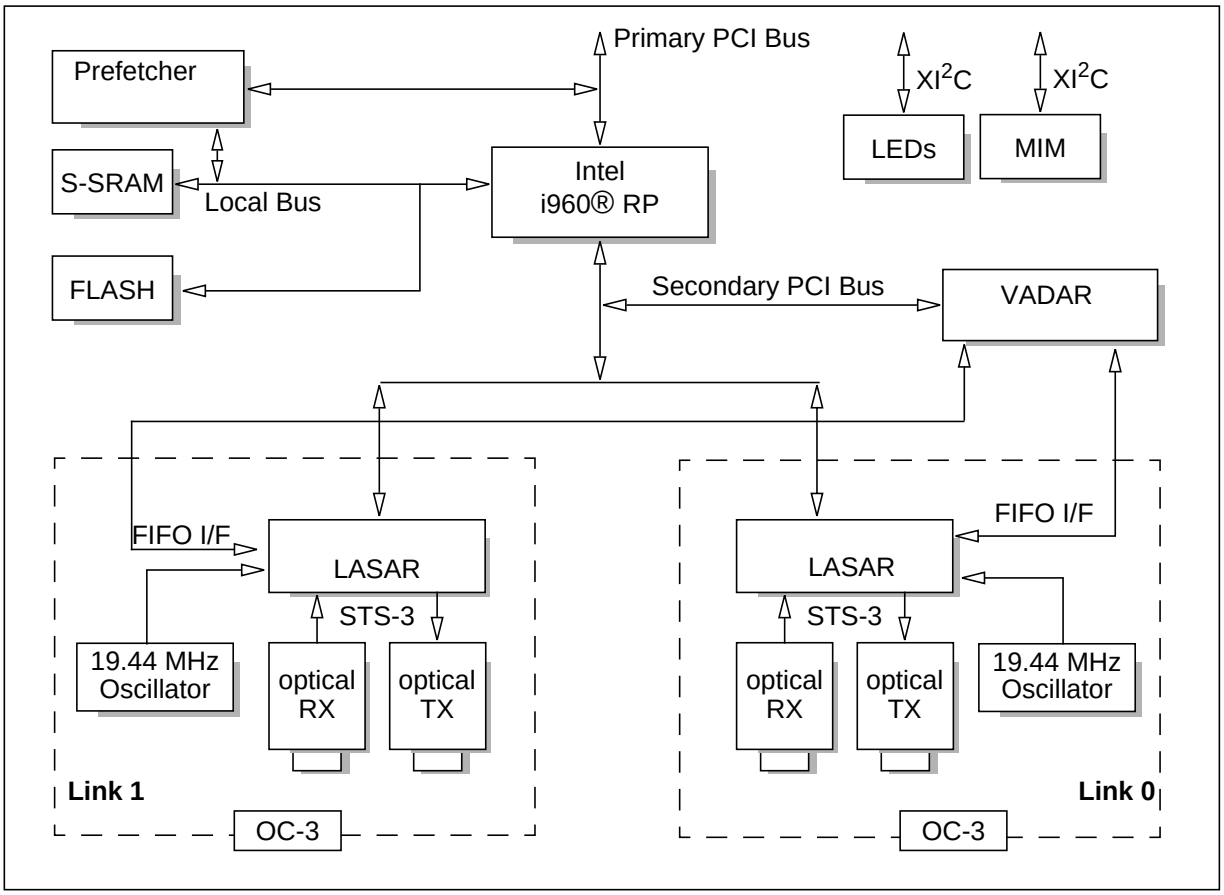

Optical transceivers

The optical interface is provided by a pair of Hewlett Packard HFBR-5205 155.52 Mbit/s multimode fiber transceivers. The HFBR-5205 transceiver provides a SONET OC-3 link for distances up to 2000 m using 62.5/125 mm diameter multimode fiber optic cable.

The receiver section of the optical transceiver converts SONET OC-3 optical signals to SONET STS-3 electrical signals which are then output to the LASAR. The transmitter section of the optical transceiver converts SONET STS-3 electrical signals generated by the LASAR to SONET OC-3 optical signals which are then transmitted into the fiber optic cable.

The receiver section of the optical transceiver uses a PIN photodiode coupled to a custom silicon transimpedance preamplifier integrated circuit (IC) to receive the optical signal from the fiber optic cable. The PIN photodiode/preamplifier IC combination is coupled to a quantizer IC which provides the final pulse shaping for the PECL level logic signals output to the LASAR.

The transmitter section of the optical transceiver uses a 1300 nanometer infrared light emitting diode (LED) to transmit the optical signal into the fiber optic cable. The LED is driven by a custom silicon integrated circuit (IC) which converts differential PECL level logic signals into an analog LED drive current.

LASAR

The local asynchronous transfer mode segmentation and reassembly (LASAR) processor is a highly integrated semi-conductor employing low power, +5 volt CMOS technology.

The LASAR combines a physical layer (PHY) processor, an asynchronous transfer mode adaptation layer type 5 segmentation and reassembly sublayer (AAL5-SAR) processor, and a peripheral component interconnect (PCI) direct memory access (DMA) controller on a single chip.

The PHY processor provides the PECL level SONET STS-3C transmit and receive links used to connect the LASAR to the optical transceivers. The PHY processor provides the peripheral component interconnect (PCI) interface between the LASAR and synchronous static random access memory (S-SRAM). The PHY processor also provides the first in/first out (FI/FO) link used to connect the LASAR to the VADAR field programmable gate array (FPGA).

The AAL5-SAR processor reassembles the message packet received from the optical transceiver and outputs the resulting reliable data exchange protocol

NTLX05AA (continued)

(RDEP) signals through the PCI bus and local bus directly to the Intel i960 microprocessor's on-board synchronous static random access memory (S-SRAM).

The AAL5-SAR processor segments the RDEP signals output by the Intel i960 microprocessor through the PCI bus into a message packet and outputs the packet to the optical transceiver.

The PCI DMA controller manages the transfer of RDEP signals between the AAL5-SAR processor and S-SRAM independent of the Intel i960 microprocessor core.

19.44 MHz oscillator

In order to generate the STS-3C electronic transmission rate, the LASAR requires a clock reference of 19.44 MHz. Each LASAR requires a 19.44 MHz clock for its transmit clock as well as its receive clock. Since the drive capability of a single oscillator is not sufficient to drive the required load of both LASARs, two 19.44 MHz crystal oscillators are used, one for each LASAR.

i960 microprocessor

The i960 33MHz microprocessor integrates the functionality required to create an intelligent peripheral component interconnect (PCI) input/output (I/O) subsystem. The primary task of the microprocessor is to direct memory access in and out of the synchronous static random access memory (S-SRAM). The microprocessor also implements reliable data exchange protocol (RDEP) on signals output to the LASAR.

The microprocessor fetches its code from FLASH memory upon bootup and uses the S-SRAM as code space and data store during regular operation.

The i960 microprocessor core is the Intel i960 JF processor. Integrated around the i960 JF processor core are the following peripherals required to complete the requirements of an intelligent PCI I/O subsystem:

- A pair of address translation units (ATUs) used to provide direct access between the PCI buses (primary and secondary) and the local bus
- A messaging unit (MU) used to provide the mechanism required to transfer data between the PCI buses and the microprocessor
- A set of four bus arbitration units used to provide the arbitrator logic control which controls bus mastership for the PCI buses and the local bus
- A direct memory access (DMA) controller used to provide the high throughput data transfers between the PCI buses and the microprocessor's on board synchronous static random access memory (S-SRAM)

- An integrated memory controller (MC) used to provide a direct connection between the microprocessor and the S-SRAM and FLASH memories
- An input/output (I/O) advanced programmable interrupt controller (APIC) used to provide intelligent handling of PCI device interrupts by first filtering the interrupts and then selectively performing the interrupt processing.

In the outgoing (transmit) direction, the serial signals output by the IOP pack through the IOP connector through the PCI bus to the Prefetcher are output by the Prefetcher through the local bus to a transmit buffer in S-SRAM. The microprocessor reads out the serial signals from the buffer, converts the serial signals to RDEP signals, and then writes the RDEP signals into a LASAR transmit buffer in S-SRAM. The LASAR constantly monitors the state of its transmit buffer, and when the RDEP signals appear, the LASAR will read out the RDEP signals, which it then segments into an OC-3 message packet.

In the incoming (receive) direction, the RDEP signals output by the LASAR through the PCI bus are transferred directly through the local bus to S-SRAM.

Prefetcher

The prefetcher is a field programmable gate array (FPGA) which acts as direct memory access (DMA) controller for the Intel i960 microprocessor synchronous static random access memory (S-SRAM).

The Prefetcher DMA controller transfers signals from the transmit buffers in S-SRAM for outgoing signals and transfers signals to the receive buffers in S-SRAM for incoming signals. The DMA controller requests access to the S-SRAM from the Intel i960 microprocessor and waits until the request is granted in order to access S-SRAM.

In the outgoing (transmit) direction, the serial signals output by the IOP pack through the IOP connector over the PCI bus to the Prefetcher are output by the Prefetcher through the local bus to a transmit buffer in S-SRAM.

In the incoming (receive) direction, the RDEP signals output by LASAR through the PCI bus are transferred directly through the local bus to a Prefetcher receive buffer in S-SRAM. The microprocessor then informs the Prefetcher, by a write pointer update, that there are signals in the Prefetcher receive buffer. Upon receiving the pointer update, the Prefetcher reads out the serial signals from the buffer and outputs them through the PCI bus to the IOP connector (and on through the IOP pack and the XA-Core midplane to the appropriate shared memory pack).

NTLX05AA (continued)

FLASH memory

The FLASH memory is a 1M x 8 bit non-volatile memory configured as two independent memory banks of 512K x 8 bit. Each memory bank contains all the code and static data structures for the Intel i960 microprocessor. This allows the Intel i960 microprocessor to execute out of one FLASH memory bank while the second is being updated.

In order to benefit from faster access times, much of the code is copied from FLASH memory to the S-SRAM by the microprocessor upon bootup or reset, so that all subsequent code and data fetches will be from the S-SRAM.

S-SRAM

The synchronous static random access memory (S-SRAM) is a 128K x 36 bit synchronous static random access memory ball grid array (BGA) device which permits parity checking.

The S-SRAM is used to store code for the Intel i960 microprocessor. This code is copied from FLASH memory to the S-SRAM by the microprocessor on bootup or reset so that all subsequent code and data fetches will be from the S-SRAM. This allows the microprocessor to benefit from faster access times relative to execution out of FLASH memory.

The S-SRAM is also used to provide transmit and receive buffers for the Prefetcher as well as transmit buffers for the LASAR. The Prefetcher serves as the memory controller for the S-SRAM and performs the necessary parity verification.

VADER

The VADER is a field programmable gate array (FPGA) which provides an accurate time of day (TOD) which is used for billing purposes as well as to synchronize the internal events in the XA-Core shelf with those in the Message Switch. The TOD counter of the JABBA located on the NT9X63AA/AB Message Switch OC-3 two-port interface paddle board installed in the Message Switch shelf periodically generates frozen digital time data which is transmitted as a TOD message packet through the SONET OC-3 link to the VADER. Using the frozen digital time as a reference, an update is performed on the VADER to synchronize the VADER TOD with the JABBA TOD.

The VADER also handles out of band (OOB) information. The OOB signals generated by the VADER are output through the FIFO interface to the LASAR. The LASAR assembles the signals into an OOB message packet which is output to the optical transceiver. The transmitter section of the optical transceiver converts the STS-3C electrical signal to an OC-3C optical signal which is sent through the SONET OC-3 link to the JABBA on the NT9X63AA/AB Message Switch OC-3 two-port interface paddle board

installed in the Message Switch shelf. If the JABBA receives an error free OOB message, the message is forwarded to the remote terminal interface (RTIF) of the Message Switch.

Fault subsystem

The Intel i960 microprocessor, the VADER, the Prefetcher and each LASAR perform a functional built in self test (BIST) in order to determine their operational status. If a persistent fault is detected, a fault message is generated. The fault message is output through the IEEE 1149.1 joint test access group (JTAG) bus to the test controller on the IOP pack into which the packlet is installed. Upon receipt of the fault message, the test controller generates a fault log which is output through the XI2C bus to the MIM. If the fault is fatal, the test controller turns off the green LED and turns on the red LED. If the fatal fault was detected by a LASAR, the test controller will also turn on the amber LED.

MIM

The module information memory (MIM) is a non-volatile 32 KByte serial electrically erasable programmable memory (EEPROM) device. The MIM is used to store module identification information in the standardized DMS100 format used by all packs and packlets. The MIM contains manufacturing information identifying product engineering code (PEC), release, serial number, manufacturing date, and packet operating parameters.

The MIM is also used to store fault log information generated by the test controller on the IOP pack into which the packlet is installed. The fault log includes the time and date of the fault, symptoms of the fault, location of the fault, and command or request that reported the fault. The fault log also contains the last three significant events that occurred on the packet as well as the last manual action which impacted the operation of the packet.

LEDs

Three light emitting diodes (LEDs) are used to indicate the current operational status of the packet. The operational status of the packet is determined by the test controller on the IOP pack into which the packlet is installed. The test controller communicates with each LED over the XI2C bus, causing the LED to turn on or off according to the alarm strategy for XA-Core.

Power subsystem

The packlet employes a mixed voltage design requiring 5 V and 3.3 V power. The packlet receives a pair of -48 Vdc or -60 Vdc office battery power feeds from the IOP pack into which the packlet is installed through the packlet connector.

NTLX05AA (continued)

The -48/60 Vdc power fed in through the IOP packlet connector is first fused through a 3.0 Amp fuse and then passed through a high frequency LC pi filter consisting of ferrite beads and ceramic capacitors. The filtered power is passed through a field effect transistor (FET) inrush current limiter. The power is then low frequency filtered by passing it through a common mode inductor followed by a low frequency LC pi filter consisting of two 47uF electrolytic capacitors and a 10uH inductor. The filtered power is then applied to a 5.0 V point of use power supply (PUPS). The high efficiency dc-dc power transformer in the PUPS converts the input voltage to 5.0 Vdc. The output voltage is filtered through an output filter and stabilized by a pulsewidth modulator (PWM). The resulting 5 Vdc @ 17 W power feeds the optical transceivers, the LASARs, and the VADER.

A low voltage input shutdown circuit senses the power input passing through the low frequency input filters. If the input voltage falls below 34.0 Vdc, it will disable the PWM. Once disabled, the 5 Vdc power supply will not restart until the input voltage is above 36.5 Vdc.

The -48/60 Vdc power fed in through the IOP packlet connector, fused and filtered, is also applied to a 3.3V point of use power supply (PUPS). The high efficiency dc-dc power transformer in the PUPS converts the input voltage to 5.0 Vdc. The resulting 3.3 Vdc @ 13 W power feeds the Intel i960 microprocessor, the S-SRAM, the FLASH memory, the Prefetcher and the MIM.

A low voltage supervisor integrated circuit (IC) monitors the power output from the 3.3 V PUPS. If the output voltage falls below 2.9 Vdc, it disables both PUPS and sends a low voltage reset signal to the IOP pack into which the packlet is installed. Once disabled, the power supply will not restart until the IOP pack generates a hard (power-up) reset on the packlet.

Technical data

This section describes the technical specifications for the NTLX05AB XA-Core OC-3 two-port interface packlet. The specifications include power requirements, status light emitting diodes (LEDs), technology, and equipment dimensions.

Power requirements

The power requirements for the XA-Core OC-3 two-port interface packlet appear in the following table.

Power Requirements

Parameter	Min.	Nom.	Max.
Supply voltage (Vdc)	-35	-48/60	-75
Supply current (Adc)	1.37	2.15	2.94

Status LEDs

The status LEDs are contained on the faceplate of the packlet. The LEDs are controlled by two signals from the test controller on the IOP pack and follow the alarm strategy for XA-Core. The LED states for the external input status LED appear in the following table.

External Input Status LED

Amber	External Input Status
Off	All external inputs on the packlet that are currently provisioned appear to be receiving a valid signal.
On	At least one of the external inputs on the packlet that are currently provisioned does not appear to be carrying a valid signal.

NTLX05AA (end)

The LED states for the packlet status LEDs appear in the following table.

Packlet Status LEDs

Green	Red	External Input Status
Off	Off	Unpowered, LED failure, or not inserted.
On	On	Powerup LED test or packlet self-test in progress.
On	Off	Packlet should not be removed. It is in service.
Off	On	Alarm state. Packlet may be removed.
Off	Wink	Packlet is being indicated as faulty. Packlet may be removed.

Technology

The NTLX05AB uses surface mount technology where possible. The PUPS, edge connectors and some other components use through-hole technology. Most discrete components, including capacitors and resistors, are installed on the secondary side. The packlet is an eight layer printed circuit board employing epoxy-fiberglass (FR4) material.

Equipment dimensions

The dimensions of the packlet are:

- overall height: 110mm (4.37 in.)
- overall depth: 135mm (5.31 in.)
- overall width: 36mm (1.40 in.)

NTLX05AB

Product description

The NTLX05AB XA-Core OC-3 (Optical Carrier) two-port interface packlet provides the core to message switch interconnect (CMIC) link between the XA-Core shelf and the Message Switch shelf. Based on its capability to have its firmware downloaded and changed, the NTLX05AB packlet, with the required firmware load, can be used for AMDI applications where the OC-3 links are connected, through an external multi-mode to single-mode converter, to an ATM edge switch.

CMIC links can also be supported by another item of XA-Core hardware, the high performance CMIC (HCMIC) circuit pack (NTLX17). In an XA-Core shelf, you cannot use a mixture of CMIC packlets and HCMIC CPs to support CMIC links. All CMIC links must be supported by CMIC packlets, or all must be supported by HCMIC CPs.

In the CMIC application, the packlet is installed on the NTLX03AA/AB XA-Core Input/Output processor (IOP) pack and connects through fiber optic cable to the NT9X63AA/AB Message Switch OC-3 two-port interface paddle board installed in the Message Switch shelf.

In the AMDI application, it connects through fiber optic cable, and through an external converter, to an ATM edge switch.

The signal protocol used across the OC-3 links connecting the packlet (in the XA-Core) and the paddle board (in the Message Switch) is reliable data exchange protocol (RDEP).

The packlet provides a pair of ATM (asynchronous transfer mode) ports with SONET OC-3 links, used as the CMIC links of the XA-Core or as AMDI links to an ATM edge switch. These links use the following protocols:

- the ATM physical layer according to the ATM Forum User Network Interface Specification and ITU-T Recommendation I.432
- the ATM Adaptation Layer Type 5 (AAL-5) for Broadband ISDN according to ITU-T Recommendation I.363
- a subset of the lower half of the Service Specific Convergence Sublayer - the Reliable Data Exchange Protocol (RDEP) as described by the ITU-T document Q.2110

The features of the NTLX05AB packlet are as follows:

- termination of a pair of SONET OC-3 links
- optical to electrical signal conversion (OC-3 to STS-3C)

NTLX05AB (continued)

- termination of the ATM layer
- termination of the AAL5 Segmentation and Reassembly Sublayer
- termination of the lower half of a subset of the Service Specific Convergence Sublayer
- reception of a dedicated channel that contains time of day (TOD) synchronization information
- transmission of out of band (OOB) messages
- built in self test (BIST) fault detection, isolation, and reporting
- provision of a 32-bit multiplexed peripheral component interconnect (PCI) bus for connectivity to the IOP pack
- capability to have firmware changed and downloaded from the DMS switch

Location

The packlet is installed in the lower packlet position of a single width NTLX03AA/AB XA-Core Input/Output processor (IOP) pack. As a CMIC packlet, the IOP pack is installed in slots 04R and 15R on the rear side of the XA-Core midplane assembly. As an AMDI packlet, it is installed in slots 5R, 6R, 13R and 14R (with 12R as an alternate spare).

Layout

The following figure shows the external appearance of the XA-Core OC-3 two-port interface packlet.

NTLX05AB (continued)

NTLX05AB OC-3 two-port interface packlet

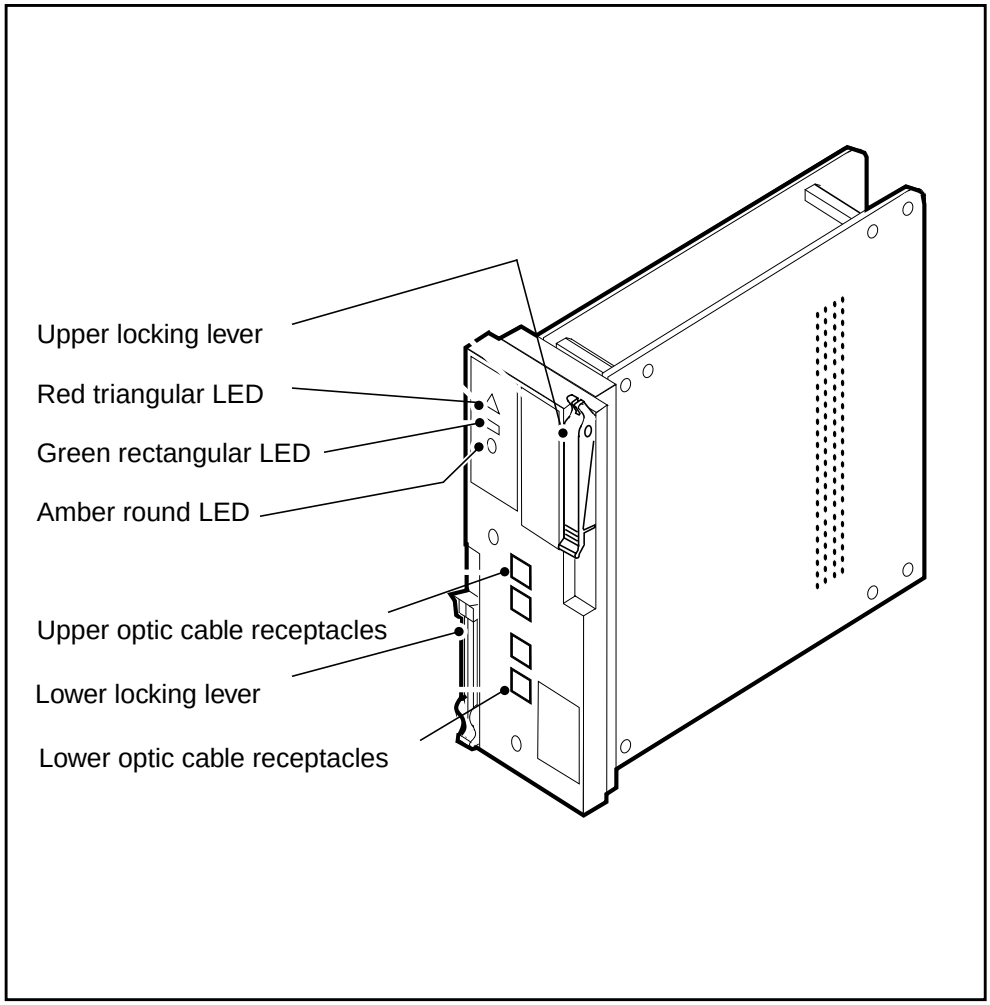

Functional description

The XA-Core OC-3 two-port interface packlet provides a duplicated communication link over OC-3 optical fiber. This link provides the core to message switch interconnect (CMIC) link between the XA-Core shelf and the Message Switch shelf, or when used as an AMDI card, between the XA-Core shelf and an ATM edge switch.

In its CMIC application, the packlet connects through fiber optic cable to the NTL9X63AA/AB Message Switch OC-3 two-port interface paddle board installed in the Message switch shelf.

In the outgoing (transmit) direction, the serial signals output by the IOP pack through the IOP connector over the PCI bus to a Prefetcher are output by the

NTLX05AB (continued)

Prefetcher through the local bus to a transmit buffer in the Intel i960 microprocessor's on-board synchronous static random access memory (S-SRAM). An Intel i960 microprocessor reads out the serial signals from the buffer, converts the serial signals to reliable data exchange protocol (RDEP) signals, and then writes the RDEP signals into a local asynchronous transfer mode segmentation and reassembly (LASAR) transmit buffer in S-SRAM. The LASAR device constantly monitors the state of its transmit buffer, and when the RDEP signals appear, the LASAR will read out the RDEP signals, which it then segments into a synchronous transport signal (STS-3C) message packet. The STS-3C message packet is output to an optical transceiver. The transmitter section of the optical transceiver converts the electrical STS-3C signals to optical carrier (OC-3) signals which are then transmitted through the fiber optic cable to the NT9X63AA/AB XA-Core OC-3 two-port interface paddle board installed on the Message Switch when used in its CMIC application.

For AMDI applications the signals are transmitted through the fiber optic cable to an external multi-mode to single-mode converter which provides access to an ATM edge switch.

In the incoming (receive) direction, ATM over SONET OC-3 message packet signals are received from the NT9X63AA/AB XA-Core OC-3 two-port interface paddle board installed in the Message Switch by an optical transceiver. The receiver section of the optical transceiver converts the SONET OC-3 optical signals to SONET STS-3 electrical signals which are then output to a LASAR. The LASAR reassembles the message packet received from the optical transceiver and outputs the resulting reliable data exchange protocol (RDEP) signals through the PCI bus and the local bus directly to a receive buffer in the Intel i960 microprocessor's on-board S-SRAM. The microprocessor then informs the Prefetcher, by a write pointer update, that there are signals in the Prefetcher receive buffer. Upon receiving the pointer update, the Prefetcher reads out the serial signals from the buffer and outputs them through the PCI bus to the IOP connector (and on through the IOP pack and the XA-Core midplane to the appropriate shared memory pack).

Functional blocks

The packlet consists of the following functional blocks:

- Optical transceiver
- LASAR semi-conductor
- 19.44 MHz Oscillator
- Intel i960 microprocessor
- FLASH memory

NTLX05AB (continued)

- synchronous static random access memory (S-SRAM)
- Prefetcher field programmable gate array (FPGA)
- VADER time of day (TOD) field programmable gate array (FPGA)
- Module information memory (MIM)
- Light emitting diodes (LEDs)
- Power subsystem

The following figure shows the relationship between the functional blocks.

NTLX05AB functional blocks

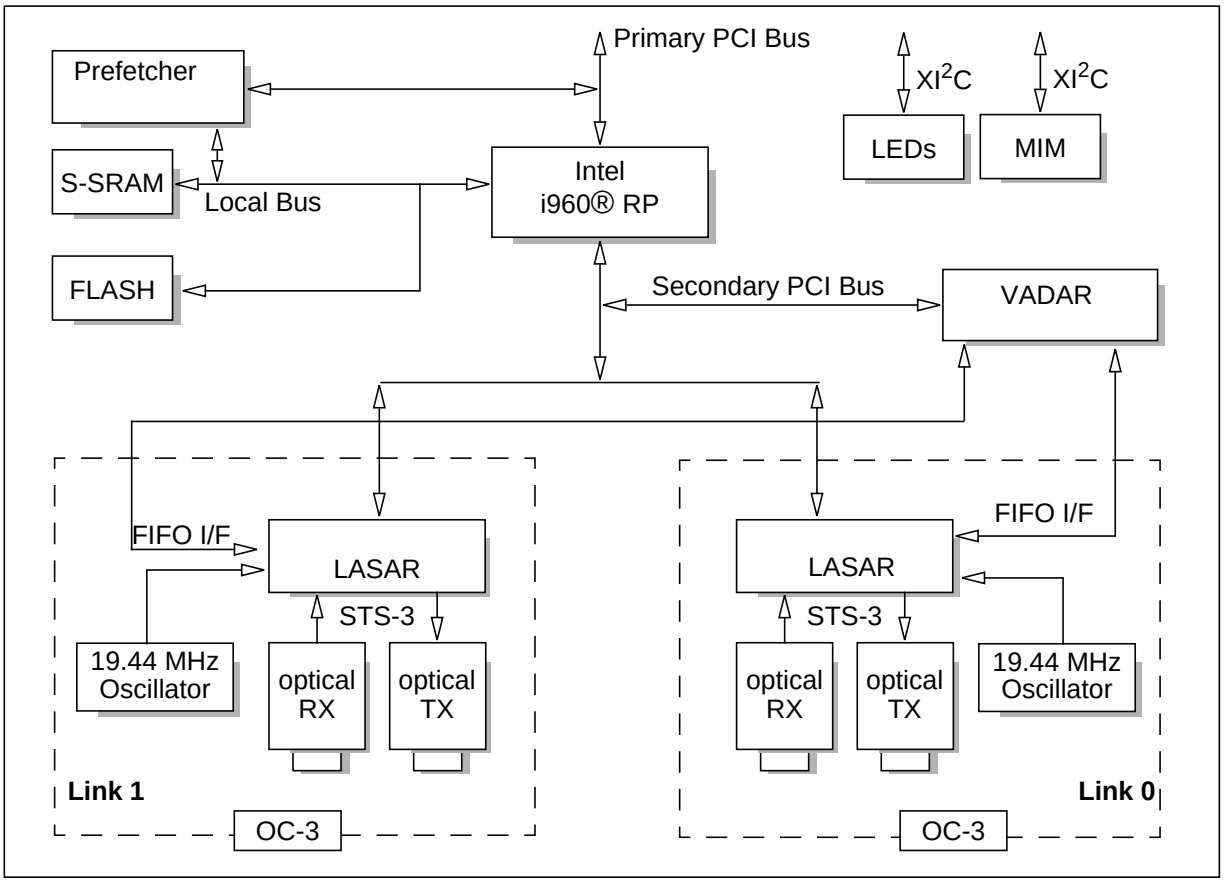

Optical transceivers

The optical interface is provided by a pair of Hewlett Packard HFBR-5205 155.52 Mbit/s multimode fiber transceivers. The HFBR-5205 transceiver

NTLX05AB (continued)

provides a SONET OC-3 link for distances up to 2000 m using 62.5/125 mm diameter multimode fiber optic cable.

The receiver section of the optical transceiver converts SONET OC-3 optical signals to SONET STS-3 electrical signals which are then output to the LASAR. The transmitter section of the optical transceiver converts SONET STS-3 electrical signals generated by the LASAR to SONET OC-3 optical signals which are then transmitted into the fiber optic cable.

The receiver section of the optical transceiver uses a PIN photodiode coupled to a custom silicon transimpedance preamplifier integrated circuit (IC) to receive the optical signal from the fiber optic cable. The PIN photodiode/preamplifier IC combination is coupled to a quantizer IC which provides the final pulse shaping for the PECL level logic signals output to the LASAR.

The transmitter section of the optical transceiver uses a 1300 nanometer infrared light emitting diode (LED) to transmit the optical signal into the fiber optic cable. The LED is driven by a custom silicon integrated circuit (IC) which converts differential PECL level logic signals into an analog LED drive current.

LASAR

The local asynchronous transfer mode segmentation and reassembly (LASAR) processor is a highly integrated semi-conductor employing low power, +5 volt CMOS technology.

The LASAR combines a physical layer (PHY) processor, an asynchronous transfer mode adaptation layer type 5 segmentation and reassembly sublayer (AAL5-SAR) processor, and a peripheral component interconnect (PCI) direct memory access (DMA) controller on a single chip.

The PHY processor provides the PECL level SONET STS-3C transmit and receive links used to connect the LASAR to the optical transceivers. The PHY processor provides the peripheral component interconnect (PCI) interface between the LASAR and synchronous static random access memory (S-SRAM). The PHY processor also provides the first in/first out (FI/FO) link used to connect the LASAR to the VADAR field programmable gate array (FPGA).

The AAL5-SAR processor reassembles the message packet received from the optical transceiver and outputs the resulting reliable data exchange protocol (RDEP) signals through the PCI bus and local bus directly to the Intel i960 microprocessor’s on-board synchronous static random access memory (S-SRAM).

The AAL5-SAR processor segments the RDEP signals output by the Intel i960 microprocessor through the PCI bus into a message packet and outputs the packet to the optical transceiver.

The PCI DMA controller manages the transfer of RDEP signals between the AAL5-SAR processor and S-SRAM independent of the Intel i960 microprocessor core.

19.44 MHz oscillator

In order to generate the STS-3C electronic transmission rate, the LASAR requires a clock reference of 19.44 MHz. Each LASAR requires a 19.44 MHz clock for its transmit clock as well as its receive clock. Since the drive capability of a single oscillator is not sufficient to drive the required load of both LASARs, two 19.44 MHz crystal oscillators are used, one for each LASAR.

i960 microprocessor

The i960 33MHz microprocessor integrates the functionality required to create an intelligent peripheral component interconnect (PCI) input/output (I/O) subsystem. The primary task of the microprocessor is to direct memory access in and out of the synchronous static random access memory (S-SRAM). The microprocessor also implements reliable data exchange protocol (RDEP) on signals output to the LASAR.

The microprocessor fetches its code from FLASH memory upon bootup and uses the S-SRAM as code space and data store during regular operation.

The i960 microprocessor core is the Intel i960 JF processor. Integrated around the i960 JF processor core are the following peripherals required to complete the requirements of an intelligent PCI I/O subsystem:

- a pair of address translation units (ATUs) used to provide direct access between the PCI buses (primary and secondary) and the local bus
- a messaging unit (MU) used to provide the mechanism required to transfer data between the PCI buses and the microprocessor
- a set of four bus arbitration units used to provide the arbitrator logic control which controls bus mastership for the PCI buses and the local bus
- a direct memory access (DMA) controller used to provide the high throughput data transfers between the PCI buses and the microprocessor’s on board synchronous static random access memory (S-SRAM)

NTLX05AB (continued)

- an integrated memory controller (MC) used to provide a direct connection between the microprocessor and the S-SRAM and FLASH memories
- an input/output (I/O) advanced programmable interrupt controller (APIC) used to provide intelligent handling of PCI device interrupts by first filtering the interrupts and then selectively performing the interrupt processing

In the outgoing (transmit) direction, the serial signals output by the IOP pack through the IOP connector through the PCI bus to the Prefetcher are output by the Prefetcher through the local bus to a transmit buffer in S-SRAM. The microprocessor reads out the serial signals from the buffer, converts the serial signals to RDEP signals, and then writes the RDEP signals into a LASAR transmit buffer in S-SRAM. The LASAR constantly monitors the state of its transmit buffer, and when the RDEP signals appear, the LASAR will read out the RDEP signals, which it then segments into an OC-3 message packet.

In the incoming (receive) direction, the RDEP signals output by the LASAR through the PCI bus are transferred directly through the local bus to S-SRAM.

Prefetcher

The prefetcher is a field programmable gate array (FPGA) which acts as direct memory access (DMA) controller for the Intel i960 microprocessor synchronous static random access memory (S-SRAM).

The Prefetcher DMA controller transfers signals from the transmit buffers in S-SRAM for outgoing signals and transfers signals to the receive buffers in S-SRAM for incoming signals. The DMA controller requests access to the S-SRAM from the Intel i960 microprocessor and waits until the request is granted in order to access S-SRAM.

In the outgoing (transmit) direction, the serial signals output by the IOP pack through the IOP connector over the PCI bus to the Prefetcher are output by the Prefetcher through the local bus to a transmit buffer in S-SRAM.

In the incoming (receive) direction, the RDEP signals output by LASAR through the PCI bus are transferred directly through the local bus to a Prefetcher receive buffer in S-SRAM. The microprocessor then informs the Prefetcher, by a write pointer update, that there are signals in the Prefetcher receive buffer. Upon receiving the pointer update, the Prefetcher reads out the serial signals from the buffer and outputs them through the PCI bus to the IOP connector (and on through the IOP pack and the XA-Core midplane to the appropriate shared memory pack).

FLASH memory

The FLASH memory is a 1M x 8 bit non-volatile memory configured as two independent memory banks of 512K x 8 bit. Each memory bank contains all the code and static data structures for the Intel i960 microprocessor. This allows the Intel i960 microprocessor to execute out of one FLASH memory bank while the second is being updated.

In order to benefit from faster access times, much of the code is copied from FLASH memory to the S-SRAM by the microprocessor upon bootup or reset, so that all subsequent code and data fetches will be from the S-SRAM.

S-SRAM

The synchronous static random access memory (S-SRAM) is a 128K x 36 bit synchronous static random access memory ball grid array (BGA) device which permits parity checking.

The S-SRAM is used to store code for the Intel i960 microprocessor. This code is copied from FLASH memory to the S-SRAM by the microprocessor on bootup or reset so that all subsequent code and data fetches will be from the S-SRAM. This allows the microprocessor to benefit from faster access times relative to execution out of FLASH memory.

The S-SRAM is also used to provide transmit and receive buffers for the Prefetcher as well as transmit buffers for the LASAR. The Prefetcher serves as the memory controller for the S-SRAM and performs the necessary parity verification.

VADER

The VADER is a field programmable gate array (FPGA) which provides an accurate time of day (TOD) which is used for billing purposes as well as to synchronize the internal events in the XA-Core shelf with those in the Message Switch when the packlet is used in its CMIC application. The TOD counter of the JABBA located on the NT9X63AA/AB Message Switch OC-3 two-port interface paddle board installed in the Message Switch shelf periodically generates frozen digital time data which is transmitted as a TOD message packet through the SONET OC-3 link to the VADER. Using the frozen digital time as a reference, an update is performed on the VADER to synchronize the VADER TOD with the JABBA TOD.

The VADER also handles out of band (OOB) information. The OOB signals generated by the VADER are output through the FIFO interface to the LASAR. The LASAR assembles the signals into an OOB message packet which is output to the optical transceiver. The transmitter section of the optical transceiver converts the STS-3C electrical signal to an OC-3C optical signal which, when the packlet is used in its CMIC application, is sent through the

NTLX05AB (continued)

SONET OC-3 link to the JABBA on the NT9X63AA/AB Message Switch OC-3 two-port interface paddle board installed in the Message Switch shelf. If the JABBA receives an error free OOB message, the message is forwarded to the remote terminal interface (RTIF) of the Message Switch.

Fault subsystem

The Intel i960 microprocessor, the VADER, the Prefetcher and each LASAR perform a functional built in self test (BIST) in order to determine their operational status. If a persistent fault is detected, a fault message is generated. The fault message is output through the IEEE 1149.1 joint test access group (JTAG) bus to the test controller on the IOP pack into which the packlet is installed. Upon receipt of the fault message, the test controller generates a fault log which is output through the XI2C bus to the MIM. If the fault is fatal, the test controller turns off the green LED and turns on the red LED. If the fatal fault was detected by a LASAR, the test controller will also turn on the amber LED.

MIM

The module information memory (MIM) is a non-volatile 32 KByte serial electrically erasable programmable memory (EEPROM) device. The MIM is used to store module identification information in the standardized DMS100 format used by all packs and packlets. The MIM contains manufacturing information identifying product engineering code (PEC), release, serial number, manufacturing date, and packet operating parameters.

The MIM is also used to store fault log information generated by the test controller on the IOP pack into which the packlet is installed. The fault log includes the time and date of the fault, symptoms of the fault, location of the fault, and command or request that reported the fault. The fault log also contains the last three significant events that occurred on the packet as well as the last manual action which impacted the operation of the packet.

LEDs

Three light emitting diodes (LEDs) are used to indicate the current operational status of the packet. The operational status of the packet is determined by the test controller on the IOP pack into which the packlet is installed. The test controller communicates with each LED over the XI2C bus, causing the LED to turn on or off according to the alarm strategy for XA-Core.

Power subsystem

The packlet employes a mixed voltage design requiring 5 V and 3.3 V power. The packlet receives a pair of -48 Vdc or -60 Vdc office battery power feeds from the IOP pack into which the packlet is installed through the packlet connector.

NTLX05AB (continued)

The -48/60 Vdc power fed in through the IOP packlet connector is first fused through a 3.0 Amp fuse and then passed through a high frequency LC pi filter consisting of ferrite beads and ceramic capacitors. The filtered power is passed through a field effect transistor (FET) inrush current limiter. The power is then low frequency filtered by passing it through a common mode inductor followed by a low frequency LC pi filter consisting of two 47uF electrolytic capacitors and a 10uH inductor. The filtered power is then applied to a 5.0 V point of use power supply (PUPS). The high efficiency dc-dc power transformer in the PUPS converts the input voltage to 5.0 Vdc. The output voltage is filtered through an output filter and stabilized by a pulsewidth modulator (PWM). The resulting 5 Vdc @ 17 W power feeds the optical transceivers, the LASARs, and the VADER.

A low voltage input shutdown circuit senses the power input passing through the low frequency input filters. If the input voltage falls below 34.0 Vdc, it will disable the PWM. Once disabled, the 5 Vdc power supply will not restart until the input voltage is above 36.5 Vdc.

The -48/60 Vdc power fed in through the IOP packlet connector, fused and filtered, is also applied to a 3.3V point of use power supply (PUPS). The high efficiency dc-dc power transformer in the PUPS converts the input voltage to 5.0 Vdc. The resulting 3.3 Vdc @ 13 W power feeds the Intel i960 microprocessor, the S-SRAM, the FLASH memory, the Prefetcher and the MIM.

A low voltage supervisor integrated circuit (IC) monitors the power output from the 3.3 V PUPS. If the output voltage falls below 2.9 Vdc, it disables both PUPS and sends a low voltage reset signal to the IOP pack into which the packlet is installed. Once disabled, the power supply will not restart until the IOP pack generates a hard (power-up) reset on the packlet.

Technical data

This section describes the technical specifications for the NTLX05AB XA-Core OC-3 two-port interface packlet. The specifications include power requirements, status light emitting diodes (LEDs), technology, and equipment dimensions.

NTLX05AB (continued)

Power requirements

The power requirements for the XA-Core OC-3 two-port interface packlet appear in the following table.

Power Requirements

Parameter	Min.	Nom.	Max.
Supply voltage (Vdc)	-35	-48/60	-75
Supply current (Adc)	1.37	2.15	2.94

Status LEDs

The status LEDs are contained on the faceplate of the packlet. The LEDs are controlled by two signals from the test controller on the IOP pack and follow the alarm strategy for XA-Core. The LED states for the external input status LED appear in the following table.

External Input Status LED

Amber	External Input Status
Off	All external inputs on the packlet that are currently provisioned appear to be receiving a valid signal.
On	At least one of the external inputs on the packlet that are currently provisioned does not appear to be carrying a valid signal.

NTLX05AB (end)

The LED states for the packlet status LEDs appear in the following table.

Packlet Status LEDs

Green	Red	External Input Status
Off	Off	Unpowered, LED failure, or not inserted.
On	On	Powerup LED test or packlet self-test in progress.
On	Off	Packlet should not be removed. It is in service.
Off	On	Alarm state. Packlet may be removed.
Off	Wink	Packlet is being indicated as faulty. Packlet may be removed.

Technology

The NTLX05AB uses surface mount technology where possible. The PUPS, edge connectors and some other components use through-hole technology. Most discrete components, including capacitors and resistors, are installed on the secondary side. The packlet is an eight layer printed circuit board employing epoxy-fiberglass (FR4) material.

Equipment dimensions

The dimensions of the packlet are:

- overall height: 110mm (4.37 in.)
- overall depth: 135mm (5.31 in.)
- overall width: 36mm (1.40 in.)

This page is left blank intentionally.

NTLX05BA

Product description

The NTLX05BA XA-Core OC-3 (Optical Carrier) two-port interface packlet is the ATM multi-node Data Interface(AMDI) to the ATM edge switch.

> ***Note:*** Manufacture of the NTLX05BA packlet was discontinued as of March 31, 2004.

The packlet is installed on the NTLX03AA/AB XA-Core Input/Output processor (IOP) pack and connects through fiber optic cable directly to the ATM edge switch over ports supporting STM-1 single-mode(155.52 Mbit/s) signaling.

The packlet provides a pair of ATM (asynchronous transfer mode) ports with SONET OC-3 links, to the ATM edge switch. These links use the following protocols:

- the ATM physical layer according to the ATM Forum User Network Interface Specification and ITU-T Recommendation I.432
- the ATM Adaptation Layer Type 5 (AAL-5) for Broadband ISDN according to ITU-T Recommendation I.363
- a subset of the lower half of the Service Specific Convergence Sublayer - the Reliable Data Exchange Protocol (RDEP) as described by the ITU-T document Q.2110

The features of the NTLX05BA packlet are as follows:

- termination of a pair of SONET OC-3 links
- optical to electrical signal conversion (OC-3 to STS-3C)
- termination of the ATM layer
- termination of the AAL5 Segmentation and Reassembly Sublayer
- termination of the lower half of a subset of the Service Specific Convergence Sublayer
- reception of a dedicated channel that contains time of day (TOD) synchronization information
- transmission of out of band (OOB) messages
- built in self test (BIST) fault detection, isolation, and reporting
- provision of a 32-bit multiplexed peripheral component interconnect (PCI) bus for connectivity to the IOP pack
- capability to have firmware changed and downloaded from the DMS switch

NTLX05BA (continued)

Location

The packlet is installed in the lower packlet position of a single width NTLX03AA/AB XA-Core Input/Output processor (IOP) pack. The IOP pack is installed in slots 05R, 06R, 13R and 15R(with slot 12R as an alternate spare) on the rear side of the XA-Core midplane assembly.

Layout

The following figure shows the external appearance of the XA-Core OC-3 two-port interface packlet.

NTLX05BA OC-3 two-port interface packlet

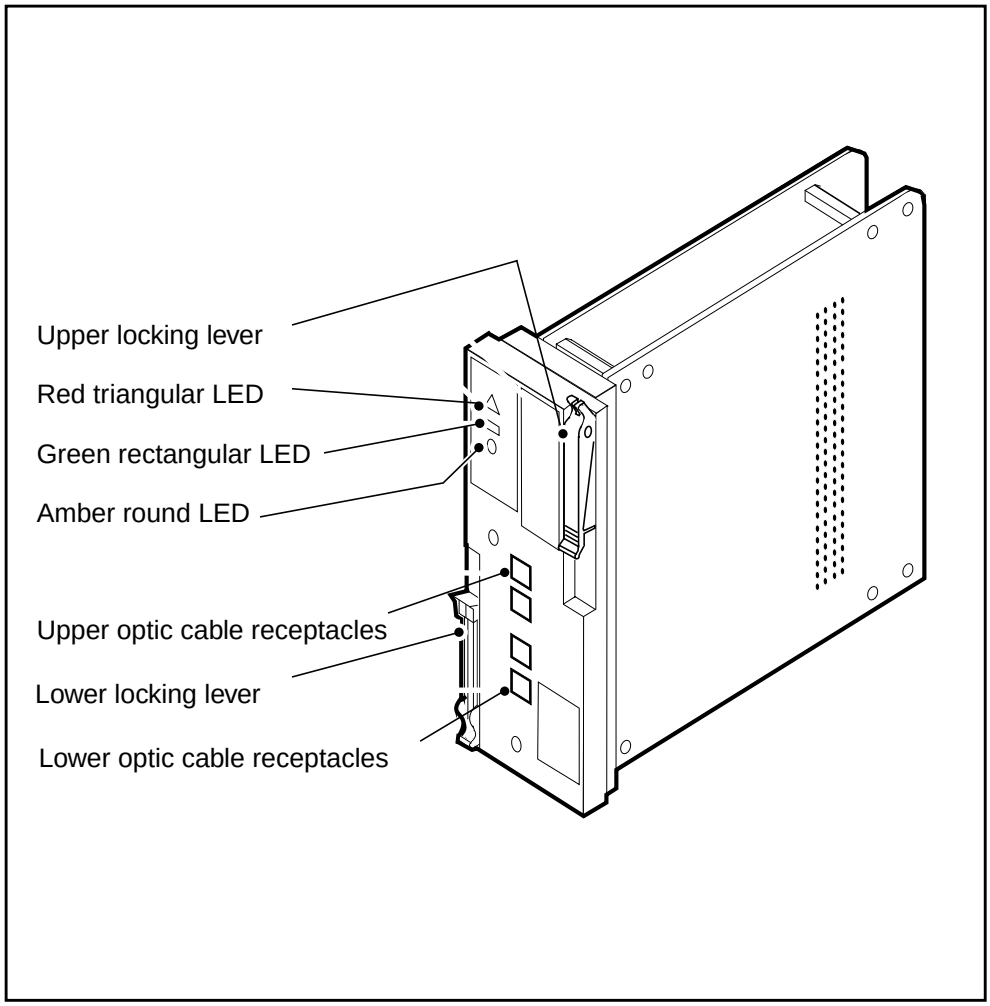

Functional description

The XA-Core OC-3 two-port interface packlet provides a duplicated communication link over OC-3 optical fiber. This link provides the core to ATM edge switch connection.

In the outgoing (transmit) direction, the serial signals output by the IOP pack through the IOP connector over the PCI bus to a Prefetcher are output by the Prefetcher through the local bus to a transmit buffer in the Intel i960 microprocessor's on-board synchronous static random access memory (S-SRAM). An Intel i960 microprocessor reads out the serial signals from the buffer, converts the serial signals to reliable data exchange protocol (RDEP) signals, and then writes the RDEP signals into a local asynchronous transfer mode segmentation and reassembly (LASAR) transmit buffer in S-SRAM. The LASAR device constantly monitors the state of its transmit buffer, and when the RDEP signals appear, the LASAR will read out the RDEP signals, which it then segments into a synchronous transport signal (STS-3C) message packet. The STS-3C message packet is output to an optical transceiver. The transmitter section of the optical transceiver converts the electrical STS-3C signals to optical carrier (OC-3) signals which are then transmitted through the fiber optic cable to the ATM edge switch.

In the incoming (receive) direction, ATM over SONET OC-3 message packet signals are received from the ATM edge switch by an optical transceiver. The receiver section of the optical transceiver converts the SONET OC-3 optical signals to SONET STS-3 electrical signals which are then output to a LASAR. The LASAR reassembles the message packet received from the optical transceiver and outputs the resulting reliable data exchange protocol (RDEP) signals through the PCI bus and the local bus directly to a receive buffer in the Intel i960 microprocessor's on-board S-SRAM. The microprocessor then informs the Prefetcher, by a write pointer update, that there are signals in the Prefetcher receive buffer. Upon receiving the pointer update, the Prefetcher reads out the serial signals from the buffer and outputs them through the PCI bus to the IOP connector (and on through the IOP pack and the XA-Core midplane to the appropriate shared memory pack).

Functional blocks

The packlet consists of the following functional blocks:

- Optical transceiver
- LASAR semi-conductor
- 19.44 MHz Oscillator
- Intel i960 microprocessor
- FLASH memory

NTLX05BA (continued)

- synchronous static random access memory (S-SRAM)
- Prefetcher field programmable gate array (FPGA)
- VADER time of day (TOD) field programmable gate array (FPGA)
- Module information memory (MIM)
- Light emitting diodes (LEDs)
- Power subsystem

The following figure shows the relationship between the functional blocks.

NTLX05BA functional blocks

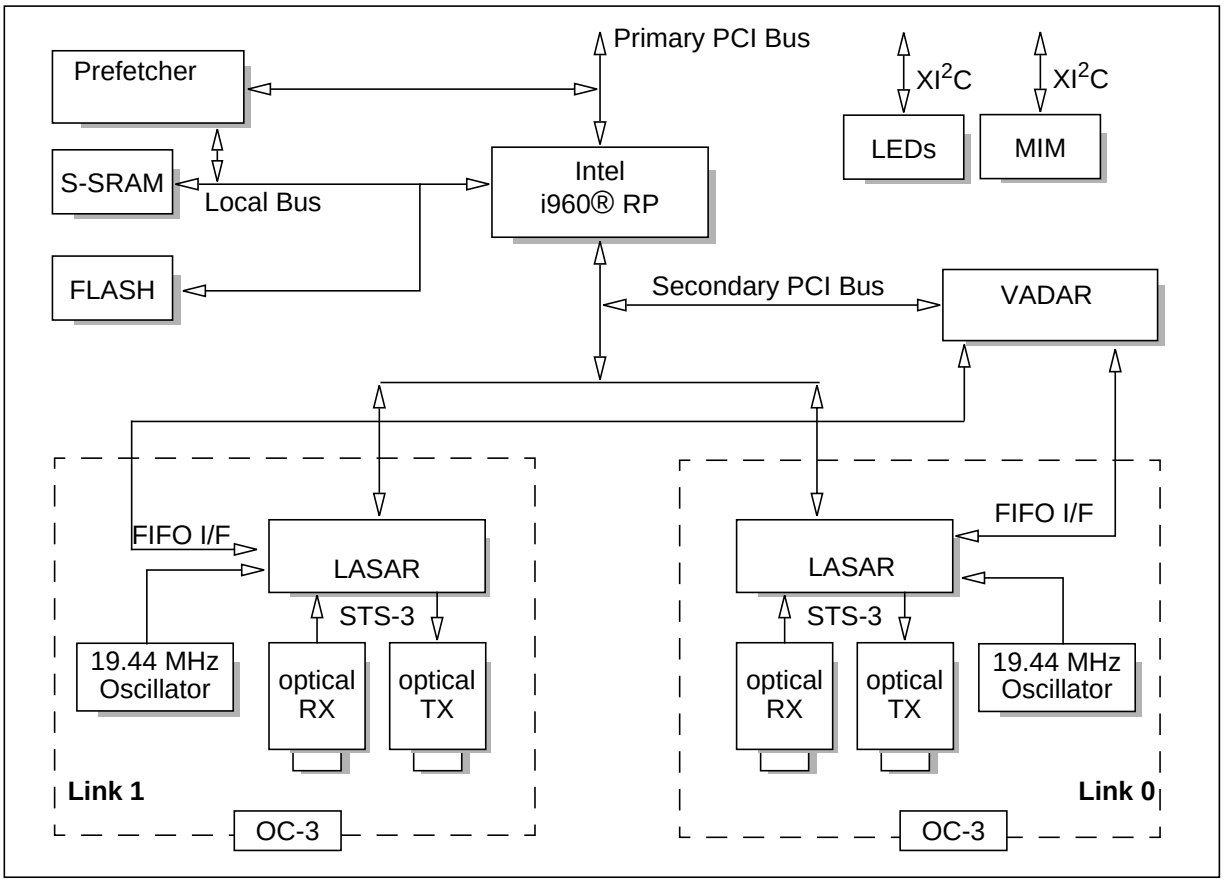

Optical transceivers

The optical interface is provided by a pair of Hewlett Packard HFBR-5205 155.52 Mbit/s multimode fiber transceivers. The HFBR-5205 transceiver

provides a SONET OC-3 link for distances up to 2000 m using 62.5/125 mm diameter multimode fiber optic cable.

The receiver section of the optical transceiver converts SONET OC-3 optical signals to SONET STS-3 electrical signals which are then output to the LASAR. The transmitter section of the optical transceiver converts SONET STS-3 electrical signals generated by the LASAR to SONET OC-3 optical signals which are then transmitted into the fiber optic cable.

The receiver section of the optical transceiver uses a PIN photodiode coupled to a custom silicon transimpedance preamplifier integrated circuit (IC) to receive the optical signal from the fiber optic cable. The PIN photodiode/preamplifier IC combination is coupled to a quantizer IC which provides the final pulse shaping for the PECL level logic signals output to the LASAR.

The transmitter section of the optical transceiver uses a 1300 nanometer infrared light emitting diode (LED) to transmit the optical signal into the fiber optic cable. The LED is driven by a custom silicon integrated circuit (IC) which converts differential PECL level logic signals into an analog LED drive current.

LASAR

The local asynchronous transfer mode segmentation and reassembly (LASAR) processor is a highly integrated semi-conductor employing low power, +5 volt CMOS technology.

The LASAR combines a physical layer (PHY) processor, an asynchronous transfer mode adaptation layer type 5 segmentation and reassembly sublayer (AAL5-SAR) processor, and a peripheral component interconnect (PCI) direct memory access (DMA) controller on a single chip.

The PHY processor provides the PECL level SONET STS-3C transmit and receive links used to connect the LASAR to the optical transceivers. The PHY processor provides the peripheral component interconnect (PCI) interface between the LASAR and synchronous static random access memory (S-SRAM). The PHY processor also provides the first in/first out (FI/FO) link used to connect the LASAR to the VADAR field programmable gate array (FPGA).

The AAL5-SAR processor reassembles the message packet received from the optical transceiver and outputs the resulting reliable data exchange protocol (RDEP) signals through the PCI bus and local bus directly to the Intel i960 microprocessor’s on-board synchronous static random access memory (S-SRAM).

NTLX05BA (continued)

The AAL5-SAR processor segments the RDEP signals output by the Intel i960 microprocessor through the PCI bus into a message packet and outputs the packet to the optical transceiver.

The PCI DMA controller manages the transfer of RDEP signals between the AAL5-SAR processor and S-SRAM independent of the Intel i960 microprocessor core.

19.44 MHz oscillator

In order to generate the STS-3C electronic transmission rate, the LASAR requires a clock reference of 19.44 MHz. Each LASAR requires a 19.44 MHz clock for its transmit clock as well as its receive clock. Since the drive capability of a single oscillator is not sufficient to drive the required load of both LASARs, two 19.44 MHz crystal oscillators are used, one for each LASAR.

i960 microprocessor

The i960 33MHz microprocessor integrates the functionality required to create an intelligent peripheral component interconnect (PCI) input/output (I/O) subsystem. The primary task of the microprocessor is to direct memory access in and out of the synchronous static random access memory (S-SRAM). The microprocessor also implements reliable data exchange protocol (RDEP) on signals output to the LASAR.

The microprocessor fetches its code from FLASH memory upon bootup and uses the S-SRAM as code space and data store during regular operation.

The i960 microprocessor core is the Intel i960 JF processor. Integrated around the i960 JF processor core are the following peripherals required to complete the requirements of an intelligent PCI I/O subsystem:

- a pair of address translation units (ATUs) used to provide direct access between the PCI buses (primary and secondary) and the local bus
- a messaging unit (MU) used to provide the mechanism required to transfer data between the PCI buses and the microprocessor
- a set of four bus arbitration units used to provide the arbitrator logic control which controls bus mastership for the PCI buses and the local bus
- a direct memory access (DMA) controller used to provide the high throughput data transfers between the PCI buses and the microprocessor’s on board synchronous static random access memory (S-SRAM)

- an integrated memory controller (MC) used to provide a direct connection between the microprocessor and the S-SRAM and FLASH memories
- an input/output (I/O) advanced programmable interrupt controller (APIC) used to provide intelligent handling of PCI device interrupts by first filtering the interrupts and then selectively performing the interrupt processing

In the outgoing (transmit) direction, the serial signals output by the IOP pack through the IOP connector through the PCI bus to the Prefetcher are output by the Prefetcher through the local bus to a transmit buffer in S-SRAM. The microprocessor reads out the serial signals from the buffer, converts the serial signals to RDEP signals, and then writes the RDEP signals into a LASAR transmit buffer in S-SRAM. The LASAR constantly monitors the state of its transmit buffer, and when the RDEP signals appear, the LASAR will read out the RDEP signals, which it then segments into an OC-3 message packet.

In the incoming (receive) direction, the RDEP signals output by the LASAR through the PCI bus are transferred directly through the local bus to S-SRAM.

Prefetcher

The prefetcher is a field programmable gate array (FPGA) which acts as direct memory access (DMA) controller for the Intel i960 microprocessor synchronous static random access memory (S-SRAM).

The Prefetcher DMA controller transfers signals from the transmit buffers in S-SRAM for outgoing signals and transfers signals to the receive buffers in S-SRAM for incoming signals. The DMA controller requests access to the S-SRAM from the Intel i960 microprocessor and waits until the request is granted in order to access S-SRAM.

In the outgoing (transmit) direction, the serial signals output by the IOP pack through the IOP connector over the PCI bus to the Prefetcher are output by the Prefetcher through the local bus to a transmit buffer in S-SRAM.

In the incoming (receive) direction, the RDEP signals output by LASAR through the PCI bus are transferred directly through the local bus to a Prefetcher receive buffer in S-SRAM. The microprocessor then informs the Prefetcher, by a write pointer update, that there are signals in the Prefetcher receive buffer. Upon receiving the pointer update, the Prefetcher reads out the serial signals from the buffer and outputs them through the PCI bus to the IOP connector (and on through the IOP pack and the XA-Core midplane to the appropriate shared memory pack).

NTLX05BA (continued)

FLASH memory

The FLASH memory is a 1M x 8 bit non-volatile memory configured as two independent memory banks of 512K x 8 bit. Each memory bank contains all the code and static data structures for the Intel i960 microprocessor. This allows the Intel i960 microprocessor to execute out of one FLASH memory bank while the second is being updated.

In order to benefit from faster access times, much of the code is copied from FLASH memory to the S-SRAM by the microprocessor upon bootup or reset, so that all subsequent code and data fetches will be from the S-SRAM.

S-SRAM

The synchronous static random access memory (S-SRAM) is a 128K x 36 bit synchronous static random access memory ball grid array (BGA) device which permits parity checking.

The S-SRAM is used to store code for the Intel i960 microprocessor. This code is copied from FLASH memory to the S-SRAM by the microprocessor on bootup or reset so that all subsequent code and data fetches will be from the S-SRAM. This allows the microprocessor to benefit from faster access times relative to execution out of FLASH memory.

The S-SRAM is also used to provide transmit and receive buffers for the Prefetcher as well as transmit buffers for the LASAR. The Prefetcher serves as the memory controller for the S-SRAM and performs the necessary parity verification.

VADER

The VADER is a field programmable gate array (FPGA) which provides an accurate time of day (TOD) which is used for billing purposes as well as to synchronize the internal events in the XA-Core shelf with those in the Message Switch.

The VADER also handles out of band (OOB) information. The OOB signals generated by the VADER are output through the FIFO interface to the LASAR. The LASAR assembles the signals into an OOB message packet which is output to the optical transceiver. The transmitter section of the optical transceiver converts the STS-3C electrical signal to an OC-3C optical signal.

Fault subsystem

The Intel i960 microprocessor, the VADER, the Prefetcher and each LASAR perform a functional built in self test (BIST) in order to determine their operational status. If a persistent fault is detected, a fault message is generated. The fault message is output through the IEEE 1149.1 joint test access group (JTAG) bus to the test controller on the IOP pack into which the packlet is

installed. Upon receipt of the fault message, the test controller generates a fault log which is output through the XI2C bus to the MIM. If the fault is fatal, the test controller turns off the green LED and turns on the red LED. If the fatal fault was detected by a LASAR, the test controller will also turn on the amber LED.

MIM

The module information memory (MIM) is a non-volatile 32 KByte serial electrically erasable programmable memory (EEPROM) device. The MIM is used to store module identification information in the standardized DMS100 format used by all packs and packlets. The MIM contains manufacturing information identifying product engineering code (PEC), release, serial number, manufacturing date, and packet operating parameters.

The MIM is also used to store fault log information generated by the test controller on the IOP pack into which the packlet is installed. The fault log includes the time and date of the fault, symptoms of the fault, location of the fault, and command or request that reported the fault. The fault log also contains the last three significant events that occurred on the packet as well as the last manual action which impacted the operation of the packet.

LEDs

Three light emitting diodes (LEDs) are used to indicate the current operational status of the packet. The operational status of the packet is determined by the test controller on the IOP pack into which the packlet is installed. The test controller communicates with each LED over the XI2C bus, causing the LED to turn on or off according to the alarm strategy for XA-Core.

Power subsystem

The packlet employes a mixed voltage design requiring 5 V and 3.3 V power. The packlet receives a pair of -48 Vdc or -60 Vdc office battery power feeds from the IOP pack into which the packlet is installed through the packlet connector.

The -48/60 Vdc power fed in through the IOP packlet connector is first fused through a 3.0 Amp fuse and then passed through a high frequency LC pi filter consisting of ferrite beads and ceramic capacitors. The filtered power is passed through a field effect transistor (FET) inrush current limiter. The power is then low frequency filtered by passing it through a common mode inductor followed by a low frequency LC pi filter consisting of two 47uF electrolytic capacitors and a 10uH inductor. The filtered power is then applied to a 5.0 V point of use power supply (PUPS). The high efficiency dc-dc power transformer in the PUPS converts the input voltage to 5.0 Vdc. The output voltage is filtered through an output filter and stabilized by a pulsewidth

NTLX05BA (continued)

modulator (PWM). The resulting 5 Vdc @ 17 W power feeds the optical transceivers, the LASARs, and the VADER.

A low voltage input shutdown circuit senses the power input passing through the low frequency input filters. If the input voltage falls below 34.0 Vdc, it will disable the PWM. Once disabled, the 5 Vdc power supply will not restart until the input voltage is above 36.5 Vdc.

The -48/60 Vdc power fed in through the IOP packlet connector, fused and filtered, is also applied to a 3.3V point of use power supply (PUPS). The high efficiency dc-dc power transformer in the PUPS converts the input voltage to 5.0 Vdc. The resulting 3.3 Vdc @ 13 W power feeds the Intel i960 microprocessor, the S-SRAM, the FLASH memory, the Prefetcher and the MIM.

A low voltage supervisor integrated circuit (IC) monitors the power output from the 3.3 V PUPS. If the output voltage falls below 2.9 Vdc, it disables both PUPS and sends a low voltage reset signal to the IOP pack into which the packlet is installed. Once disabled, the power supply will not restart until the IOP pack generates a hard (power-up) reset on the packlet.

Technical data

This section describes the technical specifications for the NTLX05BA XA-Core OC-3 two-port interface packlet. The specifications include power requirements, status light emitting diodes (LEDs), technology, and equipment dimensions.

Power requirements

The power requirements for the XA-Core OC-3 two-port interface packlet appear in the following table.

Power Requirements

Parameter	Min.	Nom.	Max.
Supply voltage (Vdc)	-35	-48/60	-75
Supply current (Adc)	1.37	2.15	2.94

Status LEDs

The status LEDs are contained on the faceplate of the packlet. The LEDs are controlled by two signals from the test controller on the IOP pack and follow

the alarm strategy for XA-Core. The LED states for the external input status LED appear in the following table.

External Input Status LED

Amber	External Input Status
Off	All external inputs on the packlet that are currently provisioned appear to be receiving a valid signal.
On	At least one of the external inputs on the packlet that are currently provisioned does not appear to be carrying a valid signal.

The LED states for the packlet status LEDs appear in the following table.

Packlet Status LEDs

Green	Red	External Input Status
Off	Off	Unpowered, LED failure, or not inserted.
On	On	Powerup LED test or packlet self-test in progress.
On	Off	Packlet should not be removed. It is in service.
Off	On	Alarm state. Packlet may be removed.
Off	Wink	Packlet is being indicated as faulty. Packlet may be removed.

Technology

The NTLX05BA uses surface mount technology where possible. The PUPS, edge connectors and some other components use through-hole technology. Most discrete components, including capacitors and resistors, are installed on the secondary side. The packlet is an eight layer printed circuit board employing epoxy-fiberglass (FR4) material.

NTLX05BA (end)

Equipment dimensions

The dimensions of the packlet are:

- overall height: 110mm (4.37 in.)
- overall depth: 135mm (5.31 in.)
- overall width: 36mm (1.40 in.)

NTLX06

Product description

The NTLX06AB and NTLX06AC versions of the hard disk packlet are supported in CSP20. The NTLX06AA version is supported only in releases up to and including CSP18..

The NTLX06 XA-Core hard disk packlet providesmass storage through an industry standard Small Computer System Interconnect (SCSI) interface.

The following table lists the capacities of the NTLX06AA, NTLX06AB, and NTLX06AC disk packlets.

Capacity of the disk packlet

NTLX06AA	4.0 Gbytes
NTLX06AB	8.0 Gbytes
NTLX06AC	34.2 Gbytes

Note: The NTLX06AC packlet should not be installed in the same XA-Core shelf with an NTLX06AA or NTLX06AB packlet. Such mixing is not supported.

The packlet plugs into the NTLX03BA/BB XA-Core Input/Output Processor (IOP) pack.

The hard drive operates in simplex mode or shadowed set mode. Shadowed set mode is only available if the system has at least two hard disks. In shadowed set mode, all data is recorded on two disk drives. If there is a fault, operating company personnel can place the failed disk out of service. Operations then continue in simplex mode using the other disk from the set until operating company personnel install a replacement disk.

The NTLX06 disk packlet is not backward compatible with existing SuperNode or SuperNode SE hard disk storage devices. The NTLX06 disk packlet works only within an XA-Core IOP circuit pack.

The features of the NTLX06 disk packlet include the following.

- provision of a 16-bit parallel SCSI-2 Fast and Wide bus for connectivity to the hard disk
- provision of a 32-bit multiplexed Peripheral Component Interconnect (PCI) bus for connectivity to the IOP pack
- automatic power up and disk spin up to minimize hard drive recovery time

NTLX06 (continued)

- bus fault detection, isolation, and a Joint Test Access Group (JTAG)
- two alarm light emitting diodes (LEDs)

Location

The packlet is in the upper and/or lower packlet position of a dual-width NTLX03BA/BB XA-Core IOP circuit pack. The IOP circuit pack is in slots 02F-03F or slots 17F-18F on the front side of the XA-Core midplane assembly.

Layout

The following figure shows the external appearance of the NTLX06 disk packlet.

NTLX06 disk packlet

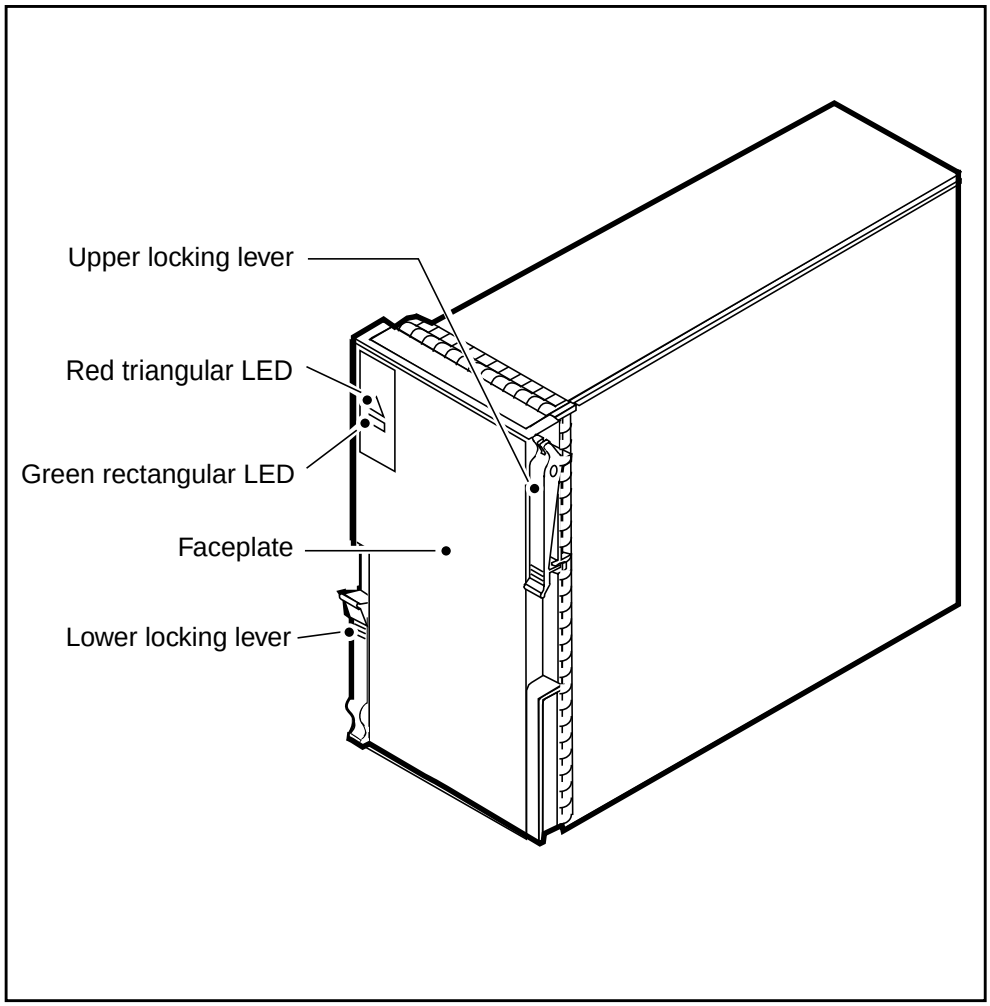

Functional description

The NTLX06 XA-Core Hard Disk packlet provides accessible fixed mass storage. The key function of the packlet is to provide mass storage to the XA-Core.

In the incoming (receive) direction, the PCI bus receives signals from the IOP packlet connector. The PCI bus sends the signals to a first in/first out (FIFO) buffer on the PCI-SCSI host adapter. A SCRIPTS processor on the PCI-SCSI host adapter applies SCSI protocol to the buffered signals. This data is then output to a driver on the PCI-SCSI host adapter. The driver drives the SCSI protocol signals through the SCSI bus to the hard disk.

In the outgoing (transmit) direction, the hard disk sends data to the SCSI bus. The FIFO buffer on the PCI-SCSI host adapter receives the signals from the SCSI bus. A SCRIPTS processor converts the SCSI signals and then sends the data to the PCI bus. The IOP packlet connector receives the data from the PCI bus.

Functional blocks

The packlet includes the following functional blocks:

- PCI-SCSI host adapter (bus adapter)
- Hard disk drive
- Light emitting diodes (LEDs)
- Module information memory (MIM)
- Power subsystem

The following figure shows the relationship between the functional blocks.

NTLX06 (continued)

NTLX06AA functional blocks

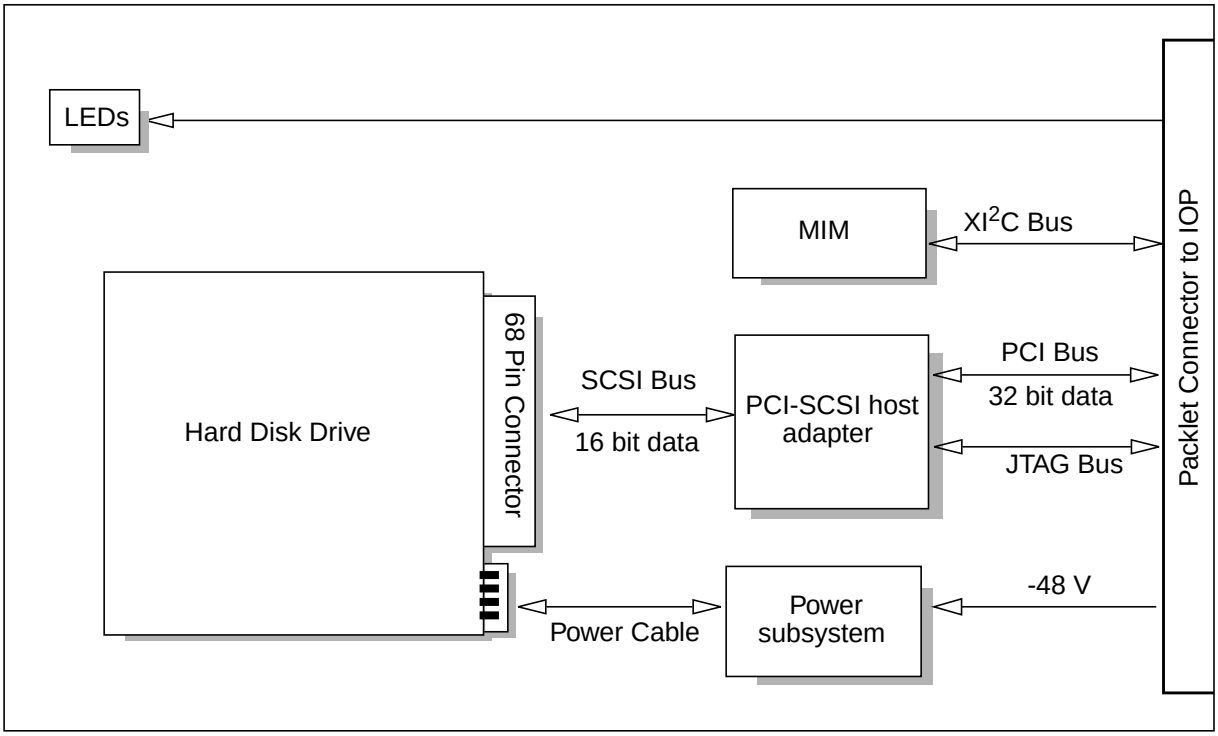

PCI-SCSI host adapter

The PCI-SCSI host adapter is a high performance plastic quad flat pack (PQFP) device. It transfers signals between the SCSI bus and the PCI bus. Because this device transfers signals between the PCI and SCSI busses, it is also referred to as the bus adapter. The bus adapter uses low power, 0.5 micron CMOS technology.

The PCI-SCSI host adapter supports a SCSI-2 Fast and Wide 16 bit parallel bus that operates at 20 MBytes per second peak. It also supports a PCI 32 bit bus that operates at 132 MBytes per second peak.

The bus adapter includes the following components, which together provide the XA-Core interface to a hard disk drive.

- A SCRIPTS integrated high speed processor controls all data transfers between the PCI bus and the SCSI bus, including the mode of transfer (synchronous or asynchronous). The processor is optimized for the SCSI protocol. The processor runs microcode or “SCRIPTS” from the SCRIPTS random access memory (RAM).
- A SCRIPTS 4 kbytes internal general purpose RAM, used for SCRIPTS program storage

- SCSI active negation low voltage transmitter/drivers, used to send signals over the SCSI bus to the hard disk
- 40 MHz oscillator that drives the SCSI transmitter/drivers
- SCSI 300 mV hysteresis receivers, used to receive signals sent over the SCSI bus by the hard disk

In the incoming (receive) direction, the PCI bus receives signals from the IOP packlet connector. The PCI bus sends the signals to a first in/first out (FIFO) buffer on the PCI-SCSI host adapter. A SCRIPTS processor on the PCI-SCSI host adapter applies SCSI protocol to the buffered signals. This data is then output to a driver on the PCI-SCSI host adapter. The driver drives the SCSI protocol signals through the SCSI bus to the hard disk.

In the outgoing (transmit) direction, the hard disk sends data to the SCSI bus. The FIFO buffer on the PCI-SCSI host adapter receives the signals from the SCSI bus. A SCRIPTS processor converts the SCSI signals and then sends the data to the PCI bus. The IOP packlet connector receives the data from the PCI bus.

Hard disk drive

A description of the hard disk drive follows. The drive:

- operates at 7200 revolutions per minute (RPM)
- has an average latency of 4.17 ms
- buffers 512kbytes of data
- uses an integrated SCSI controller which includes a set of single-ended SCSI drivers and receivers
- uses partial response/maximum likelihood (PRML) recording technology
- has an average seek time of 8.0 ms
- is sealed and requires no preventive maintenance or adjustment

The hard disk unit uses shock-absorbing stand-offs to separate it from the printed circuit board (PCB) of the packlet. The disk connects to the PCI-SCSI host adapter on the PCB through a SCSI ribbon cable. The drive uses a power cable to connect to the power subsystem’s Point of Use Power Supply (PUPS).

The hard disk drive uses the SCSI-2 Fast and Wide interface protocol. The drive transfers signals either synchronously or asynchronously at 20 Mbytes per second. The packaging of the hard disk drive meets with the hard disk drive industry standard physical size 3.5x 5.75 x 1.0 inch form factor.

NTLX06 (continued)

The software can operate the hard drive in simplex mode or shadowed set mode. Shadowed set mode is only available if the system has at least two hard disks. In shadowed set mode, all data is recorded on two disk drives. If there is a fault, operating company personnel can place the failed disk out of service. Operations then continue in simplex mode using the other disk from the set until the operating company personnel install a replacement disk.

The hard disk drive automatically spins up the disk on power up. Spin up takes up to 30 seconds to complete. During spin up, the disk drive performs a set of self tests and, if successful, is ready for use. After the disk drive has finished its initialization, software controls spin up and spin down.

Fault subsystem

On-chip logic of the host adapter detects faults. The IOP queries the possible faults and passes the information to the integrated test master (ITM). When received, the test controller generates a fault log which is sent through the XI2C bus to the MIM. If the fault is fatal, the test controller turns off the green LED and turns on the red LED.

The JTAG bus can query the JTAG ID of the host adapter and access the scan chain of the host adapter. The information stored in the MIM assists in testing and repairing a defective packlet. It simplifies the repair process and reduces the number of no fault found (NFF) conditions on packlets returned for repair.

MIM

The module information memory (MIM) is a non-volatile eight kbyte serial electrically erasable programmable memory (EEPROM) device. The MIM stores module identification information in the standard DMS-100 format used by all packs and packlets. The MIM contains information that identifies product engineering code (PEC), release, serial number, manufacturing date, and packlet operating parameters.

The MIM also stores fault log information generated by the integrated test master (ITM). The ITM is on the NTLX03BA/BB XA-Core IOP. The ITM communicates with the MIM over the XI2C bus.

LEDs

Two light emitting diodes (LEDs) indicate the status of the packlet. The packlet status is determined by the ITM on the NTLX03BA/BB XA-Core IOP. The IOP’s ITM controls the packlet’s LED signals. LEDs turn on or off according to the alarm strategy for XA-Core.

Power subsystem

The packlet uses a mixed voltage design requiring 12.0 V dc, 5.0 V dc and 3.3 V dc power. The packlet receives office battery power feeds from the IOP pack through the packlet connector.

Power from the IOP packlet connector is fused through a 2.0 A fuse. It then passes through a field effect transistor (FET) inrush limiter. At power up or hot insertion, the FET slows the current that surges into the input capacitors for the two Point of Use Power Supplies (PUPS). Power is then applied to the two PUPS.

The PUPSs converts the input voltages to 12.0 V dc and 5.0 V dc. The 12.0 V dc PUPS feeds the hard disk drive motors. Output from the second PUPS is 5.0 V dc and feeds the PCI-SCSI host adapter and the hard disk drive electronics. 5.0 V dc is also the input to the 3.3 V regulator. The resulting 3.3 V dc power feeds the MIM.

A low voltage supervisor integrated circuit (IC) monitors the power output from the 5.0 V PUPS. If the output voltage drops below 4.4 V dc, it sends a low voltage reset signal to the IOP pack. When triggered, the IOP sends a reset signal to the packlet.

Technical data

This section describes the technical specifications for the NTLX06AA XA-Core Hard Disk packlet. The specifications include power requirements, status light emitting diodes (LEDs), technology, and equipment dimensions.

Power requirements

The power requirements for the XA-Core Hard Disk packlet appear in the following table.

Power Requirements

Parameter	Min.	Nom.	Max.
Supply voltage (V dc)	-36	-48/60	-75
Supply current (A dc) @ -48 V dc	0.43	0.68	1.45

NTLX06 (end)

Status LEDs

The status LEDs are on the faceplate of the packlet. Two signals from the test controller on the IOP control the LEDs. The LEDs follow the alarm strategy for XA-Core. LED states for the packlet status LEDs appear in the following table.

Packlet Status LEDs

Green	Red	External Input Status
Off	Off	Unpowered, LED failure, or not inserted.
On	On	Powerup LED test or packlet self-test in progress.
On	Off	Packlet should not be removed. It is in service.
Off	On	Alarm state. Packlet may be removed.
Off	Wink	Packlet is being indicated as faulty. Packlet may be removed.

Technology

The NTLX06 disk packlet uses surface mount technology where possible. The PUPS, LEDs, one capacitor, and all connectors use through-hole mount technology. All active components are on the primary side. Passive devices such as capacitors and resistors are on either the primary or secondary side. The packlet is an eight layer printed circuit board made of epoxy-fiberglass (FR4) material.

Equipment dimensions

The dimensions of the packlet are:

- overall height: 129mm (5.08 in.)
- overall depth: 192mm (7.56 in.)
- overall width: 89.2mm (3.51 in.)

NTLX07AA/BA

Product description

The NTLX07 XA-Core Digital Audio Tape (DAT) packlet provides 1.3, 2.0, or 4.0 Gbytes of transportable (removable) mass storage through an industry standard Small Computer System Interconnect (SCSI) interface.

The packlet plugs into the NTLX03BA XA-Core Input/Output Processor (IOP) pack.

There are two versions of the DAT packlet: NTLX07AA and NTLX07BA. The tape capacities supported by the NTLX07AA and NTLX07BA are as follows.

- The NTLX07AA tape packlet supports 60-meter (1.3 GByte capacity) tapes, 90-meter (2.0 GByte capacity) tapes, and 120-meter (4.0 GByte capacity) tapes.
- The NTLX07BA tape packlet supports 90-meter tapes and 120-meter tapes. It does not support 60-meter tapes.

Note 1: In CSP18 the AA and BA versions of the packlet can co-exist in the same XA-Core. Therefore, if you need to replace a faulty AA version, you can use an AA or a BA. Similarly, if you need to replace a faulty BA version, you can use an AA or a BA. In releases CSP14 to CSP17, the two versions can co-exist if a software patch has been applied. For more information, see the replacement procedure for the tape packlet in the *XA-Core Maintenance Manual*, 297-8991-510.

Note 2: If the AA and AB versions are going to co-exist in an XA-Core, then all data that is on 60-meter tapes should be copied onto 90-meter tapes or 120-meter tapes, and 60-meter tapes should no longer be used.

Note 3: For a list of approved DAT tapes, see the section titled “Selection of DAT tapes approved by Nortel Networks” in the *XA-Core Maintenance Manual*, 297-8991-510.

The DAT drive and DAT cartridge tapes are not backward compatible with existing SuperNode and SuperNode SE storage devices. The DAT packlet works only within an XA-Core IOP.

The features of the NTLX07 packlet include the following.

- provision of a 8-bit parallel SCSI-2 narrow bus
- provision of a 32-bit multiplexed peripheral component interconnect (PCI) bus for connectivity to the IOP pack
- bus fault detection, isolation, and Joint Test Access Group (JTAG)
- two alarm light emitting diodes (LEDs)

NTLX07AA/BA (continued)

Location

The packlet is in the upper and/or lower packlet position of a double width NTLX03BA XA-Core IOP pack. The IOP pack is installed in slots 02F-03F and slots 17F-18F on the front side of the XA-Core midplane assembly.

Layout

The following figure shows the external appearance of the XA-Core Digital Audio Tape (DAT) packlet.

NTLX07 tape packlet

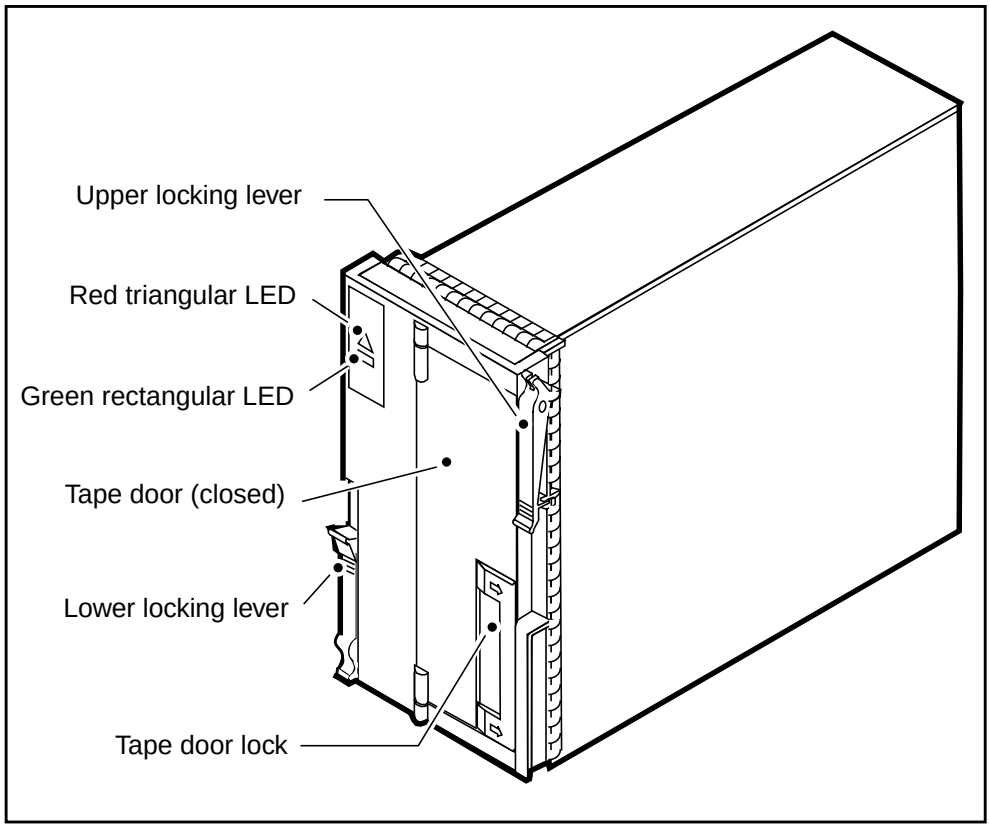

Functional description

The NTLX07 XA-Core Digital Audio Tape (DAT) packlet provides transportable mass storage. The key function of the packlet is to provide mass storage to the XA-Core.

In the incoming (receive) direction, the PCI bus receives signals from the IOP packlet connector. The PCI bus sends the signals to a first in/first out (FIFO) buffer on the PCI-SCSI host adapter. A SCRIPTS processor on the PCI-SCSI host adapter applies SCSI protocol to the buffered signals. This data is then

NTLX07AA/BA (continued)

output to a driver on the PCI-SCSI host adapter. The driver drives the SCSI protocol signals through the SCSI bus to the DAT.

In the outgoing (transmit) direction, the DAT sends data to the SCSI bus. The FIFO buffer on the PCI-SCSI host adapter receives the signals from the SCSI bus. A SCRIPTS processor converts the SCSI signals and then sends the data to the PCI bus. The IOP packlet connector receives the data from the PCI bus.

Functional blocks

The packlet consists of the following functional blocks:

- PCI-SCSI host adapter (bus adapter)
- Digital audio tape (DAT) drive
- Light emitting diodes (LEDs)
- Module information memory (MIM)
- Power subsystem

The following figure shows the relationship between the functional blocks.

NTLX07 functional blocks

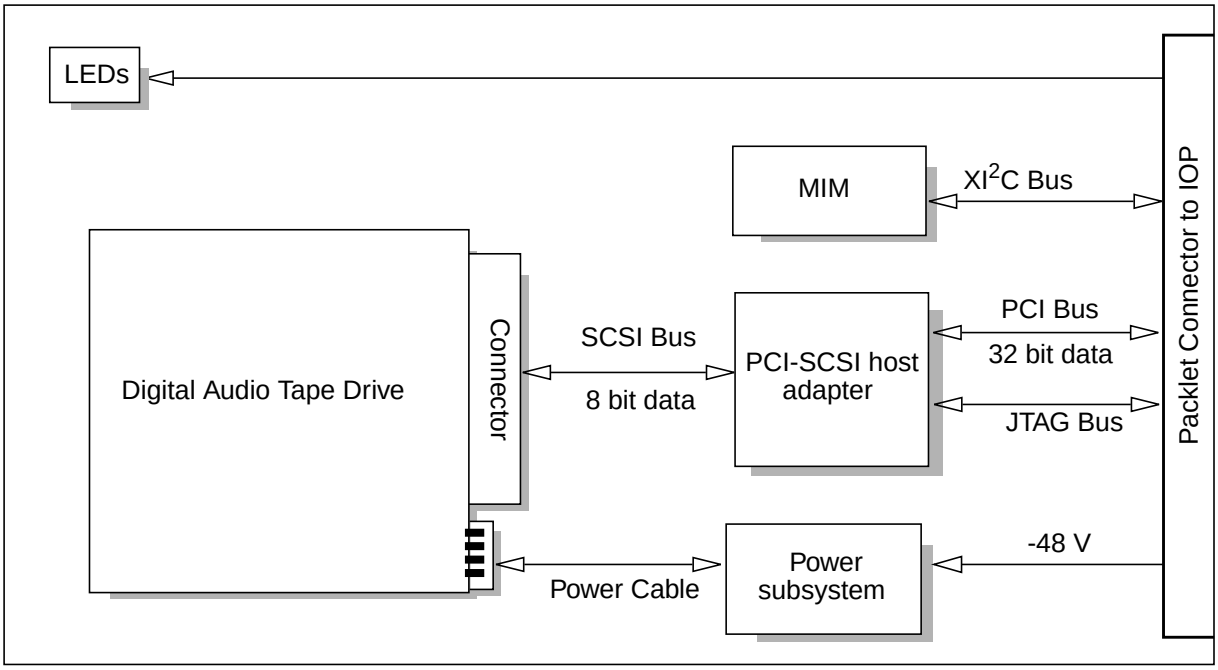

Note: In the NTLX07AA the tape drive has a 50-pin connector. In the NTLX07BA the tape drive has a 68-pin connector, and the SCSI bus connects to a 50-pin-to-68-pin converter.

NTLX07AA/BA (continued)

PCI-SCSI host adapter

The PCI-SCSI host adapter is a high performance plastic quad flat pack (PQFP) device. It transfers signals between the SCSI bus and the PCI bus. Because this device transfers signals between the PCI bus and the SCSI bus, it is also referred to as the bus adapter. The bus adapter uses low power, 0.5 micron CMOS technology.

The PCI-SCSI host adapter supports a SCSI-2 8 bit parallel bus operating at 10 MBytes per second peak and a PCI 32 bit bus operating at 132 MBytes per second peak.

The bus adapter consists of the following components, which together provide the XA-Core interface to a digital audio tape (DAT).

- A SCRIPTS integrated high speed processor controls all data transfers between the PCI bus and the SCSI bus, including the mode of transfer (synchronous or asynchronous). The processor is optimized for the SCSI protocol. The processor runs microcode or “SCRIPTS” from the SCRIPTS random access memory (RAM).
- A SCRIPTS 4 kbytes internal general purpose RAM, used for SCRIPTS program storage
- SCSI active negation low voltage transmitter/drivers, used to send signals over the SCSI bus to the DAT
- 40 MHz oscillator that drives the SCSI transmitter/drivers
- SCSI 300 mV hysteresis receivers, used to receive signals sent over the SCSI bus by the DAT

In the incoming (receive) direction, the PCI bus receives signals from the IOP packlet connector. The PCI bus sends the signals to a first in/first out (FIFO) buffer on the PCI-SCSI host adapter. A SCRIPTS processor on the PCI-SCSI host adapter applies SCSI protocol to the buffered signals. This data is then output to a driver on the PCI-SCSI host adapter. The driver drives the SCSI protocol signals through the SCSI bus to the DAT.

In the outgoing (transmit) direction, the DAT sends data to the SCSI bus. The FIFO buffer on the PCI-SCSI host adapter receives the signals from the SCSI bus. A SCRIPTS processor converts the SCSI signals and then sends the data to the PCI bus. The IOP packlet connector receives the data from the PCI bus.

Digital audio tape drive

The digital audio tape (DAT) drive operates in simplex mode.

NTLX07AA/BA (continued)

The tape drive uses a digital data storage (DDS) cartridge tape. The supported tapes are as follows.

- The NTLX07AA packlet supports the following types of tapes:
  - — 60 meter tape with a storage capacity of 1.3 Gbytes uncompressed
  - — 90 meter tape with a storage capacity of 2.0 Gbytes uncompressed
  - — 120 meter tape with a storage capacity of 4.0 Gbytes uncompressed
- The NTLX07BA packlet supports the following types of tapes:
  - — 90 meter tape with a storage capacity of 2.0 Gbytes uncompressed
  - — 120 meter tape with a storage capacity of 4.0 Gbytes uncompressed

Note: For a list of approved DAT tapes, see the section titled "Selection of DAT tapes approved by Nortel Networks" in the *XA-Core Maintenance Manual*, 297-8991-510.

The tape drive unit is installed on stand-offs and is separated from the printed circuit board (PCB) of the packlet. The DAT connects to the PCI-SCSI host adapter through a SCSI ribbon cable. The DAT uses a power cable to connect to the power subsystem's Point of Use Power Supply (PUPS).

The DAT drive uses the digital data storage revision 2 (DDS-2) recording format. The DAT has a sustained data transfer rate of 366 kbytes per second. It uses the SCSI-2 interface protocol. The packaging of the DAT meets with the DAT tape industry standard physical size 4 x 5.9 x 1.6 inch form factor.

Fault subsystem

On-chip logic of the host adapter detects faults. The IOP queries the possible faults and passes the information to the ITM. When received, the test controller generates a fault log which is sent through the XI2C bus to the MIM. If the fault is fatal, the test controller turns off the green LED and turns on the red LED.

The JTAG bus can query the JTAG ID of the host adapter and access the scan chain of the host adapter. The information stored in the MIM assists in testing and repairing a defective packlet. It simplifies the repair process and reduces the number of no fault found (NFF) conditions on packlets returned for repair.

LEDs

Two light emitting diodes (LEDs) indicate the status of the packet. The packet status is determined by the ITM on the NTLX03BA XA-Core IOP. The IOP's ITM controls the packlet's LED signals. LEDs turn on or off according to the alarm strategy for XA-Core.

NTLX07AA/BA (continued)

MIM

The module information memory (MIM) is a non-volatile eight kbyte serial electrically erasable programmable memory (EEPROM) device. The MIM stores module identification information in the standard DMS-100 format used by all packs and packlets. The MIM contains information that identifies product engineering code (PEC), release, serial number, manufacturing date, and packlet operating parameters.

The MIM also stores fault log information generated by the integrated test master (ITM). The ITM is on the NTLX03BA XA-Core IOP. The ITM communicates with the MIM over the XI2C bus.

Power subsystem

The packlet uses a mixed voltage design requiring 12.0 V dc, 5.0 V dc and 3.3 V dc power. The packlet receives office battery power feeds from the IOP pack through the packlet connector.

Power from the IOP packlet connector is fused through a 2.0 A fuse. It then passes through a field effect transistor (FET) inrush limiter. At power up or hot insertion, the FET slows the current that surges into the input capacitors for the two Point of Use Power Supplies (PUPS). Power is then applied to the two PUPS.

The PUPSs converts the input voltages to 12.0 V dc and 5.0 V dc. The resulting 12.0 V dc power feeds the DAT drive motors. Output from the second PUPS is 5.0 V dc and feeds the PCI-SCSI host adapter and the DAT drive electronics. 5.0 V dc is also the input to the 3.3 V regulator. The resulting 3.3 V dc power feeds the MIM.

A low voltage supervisor integrated circuit (IC) monitors the power output from the 5.0 V PUPS. If the output voltage drops below 4.4 V dc, it sends a low voltage reset signal to the IOP pack. When triggered, the IOP sends a reset signal to the packlet.

Technical data

This section describes the technical specifications for the NTLX07AA XA-Core Digital Audio Tape packlet. The specifications include power requirements, status light emitting diodes (LEDs), technology, and equipment dimensions.

Power requirements

The power requirements for the XA-Core Digital Audio Tape packlet appear in the following table.

Power Requirements

Parameter	Min.	Nom.	Max.
Supply voltage (V dc)	-36	-48/60	-75
Supply current (A dc) @ -48 V dc		0.25	0.71

Status LEDs

The status LEDs are contained on the faceplate of the packlet. The LEDs are controlled by two signals from the test controller on the IOP pack and follow the alarm strategy for XA-Core. The LED states for the packlet status LEDs appear in the following table.

Packlet Status LEDs

Green	Red	External Input Status
Off	Off	Unpowered, LED failure, or not inserted.
On	On	Powerup LED test or packlet self-test in progress.
On	Off	Packlet should not be removed. It is in service.
Off	On	Alarm state. Packlet may be removed.
Off	Wink	Packlet is being indicated as faulty. Packlet may be removed.

Technology

The NTLX07 uses surface mount technology where possible. The PUPS, LEDs, one capacitor, and all connectors use through-hole mount technology. Active components are on the primary side. Passive devices such as capacitors and resistors are on either the primary or secondary side. The packlet is an eight layer printed circuit board made of epoxy-fiberglass (FR4) material.

Equipment dimensions

The dimensions of the packlet are:

- overall height: 129mm (5.08 in.)
- overall depth: 192mm (7.56 in.)
- overall width: 89.2mm (3.51 in.)

This page is left blank intentionally.

NTLX08

Product description

The NTLX08AB RTIF packlet is supported. The NTLX08AA has been discontinued.

The NTLX08 Reset Terminal InterFace (RTIF) packlet is the interface to the reset system. Operating company personnel use it to monitor and control XA-Core operations. The packlet supplies two interface faceplate connectors. The larger one is for an Electronic Industries Association (EIA) RS-232C link to a remote reset terminal. The smaller interface is for an EIA RS-232C link or a Current Loop data communication link to a local reset terminal.

The packlet plugs into the NTLX03AA/AB XA-Core Input/Output Processor (IOP) pack.

RTIF links can also be supported by another item of XA-Core hardware, the high performance CMIC (HCMIC) circuit pack (NTLX17). In an XA-Core shelf, you cannot use a mixture of RTIF packlets and HCMIC circuit packs to support RTIF links. All RTIF links must be supported by RTIF packlets, or all must be supported by HCMIC circuit packs.

The RS-232C remote link can connect to a reset terminal located within the distance indicated in EIA-232-C ANSI/EIA Interface Between Data Terminal Equipment Employing Serial Data Interchange. Either the RS-232C local link or the Current Loop local link can connect to a reset terminal located within close proximity. However, only one reset terminal can connect locally and only one reset terminal can connect remotely. For example, a local Current Loop link can connect while a remote RS-232C link connects to the RTIF at the same time.

All interfaces are backward compatible with existing SuperNode and SuperNode SE reset terminals. This allows for the use of existing reset terminal equipment.

The features of the NTLX08 packlet include the following:

- EIA RS-232C interface
- Current Loop interface
- fault detection, fault isolation, and fault reporting
- three alarm light emitting diodes (LEDs)
- isolated system ground (ISG) compliant connections

NTLX08 (continued)

Location

The packlet is in the upper packlet position of a single width NTLX03AA/AB XA-Core Input/Output Processor (IOP) pack. The IOP pack is installed in slots 04R and 15R on the rear side of the XA-Core midplane assembly.

Layout

The following figure shows the external appearance of the XA-Core Reset Terminal InterFace (RTIF) packlet.

NTLX08 reset terminal interface

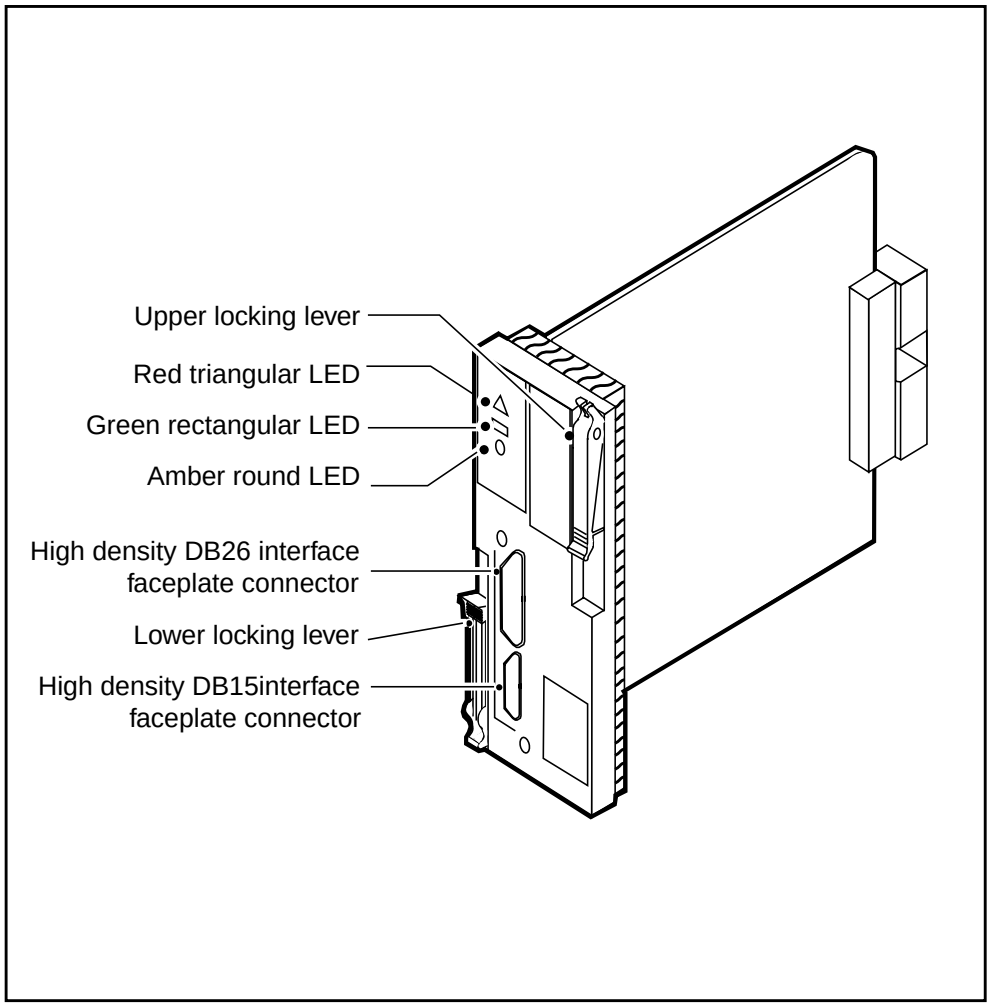

Functional description

The NTLX08 Reset Terminal InterFace (RTIF) packlet is the interface to the reset system. Operating company personnel use it to monitor and control XA-Core operations. The packlet supplies two interface faceplate connectors.

One is an Electronic Industries Association (EIA) RS-232C link to a remote reset terminal. The other interface is an EIA RS-232C link or a Current Loop (CL) data communication link to a local reset terminal.

The key function of the packlet is to provide an interface to the XA-Core that:

- provides a person-machine interface for local and remote access
- resets the state of the XA-Core without depending on the system state
- monitors and controls functionality during commissioning and emergency recovery
- provides system status information, including fault information, status during a system boot, and system sanity
- acts as a serial port resource for both firmware and software interpreters

In the outgoing (transmit) direction, signals from the IOP pass through the packlet connector to the PCI bus. The bus adapter FPGA receives the signals and transmits them to the SCC bus. The SCC passes serial signals to the appropriate transceivers. The transceivers convert the signals to voltages appropriate for the reset terminal link. The transceivers then drive the signals to the faceplate connector for the reset terminal.

In the incoming (receive) direction, the transceivers receive the serial signals from the reset terminal through the faceplate connector. The transceiver for the appropriate reset terminal translates the signal voltages to voltages appropriate for the SCC. The signals pass from the SCC to the bus adapter FPGA. The bus adapter FPGA converts the signals for the PCI bus and the bus passes the signals to the IOP.

Functional blocks

The packlet consists of the following functional blocks:

- bus adapter FPGA
- Serial communication controller (SCC)
- Transceivers
- High density DB26 and DB15 faceplate connectors
- Light emitting diodes (LEDs)
- Module information memory (MIM)
- Power subsystem
- Isolated system ground (ISG) connections and circuitry

The following figure shows the relationship between the functional blocks.

NTLX08 (continued)

NTLX08 functional blocks

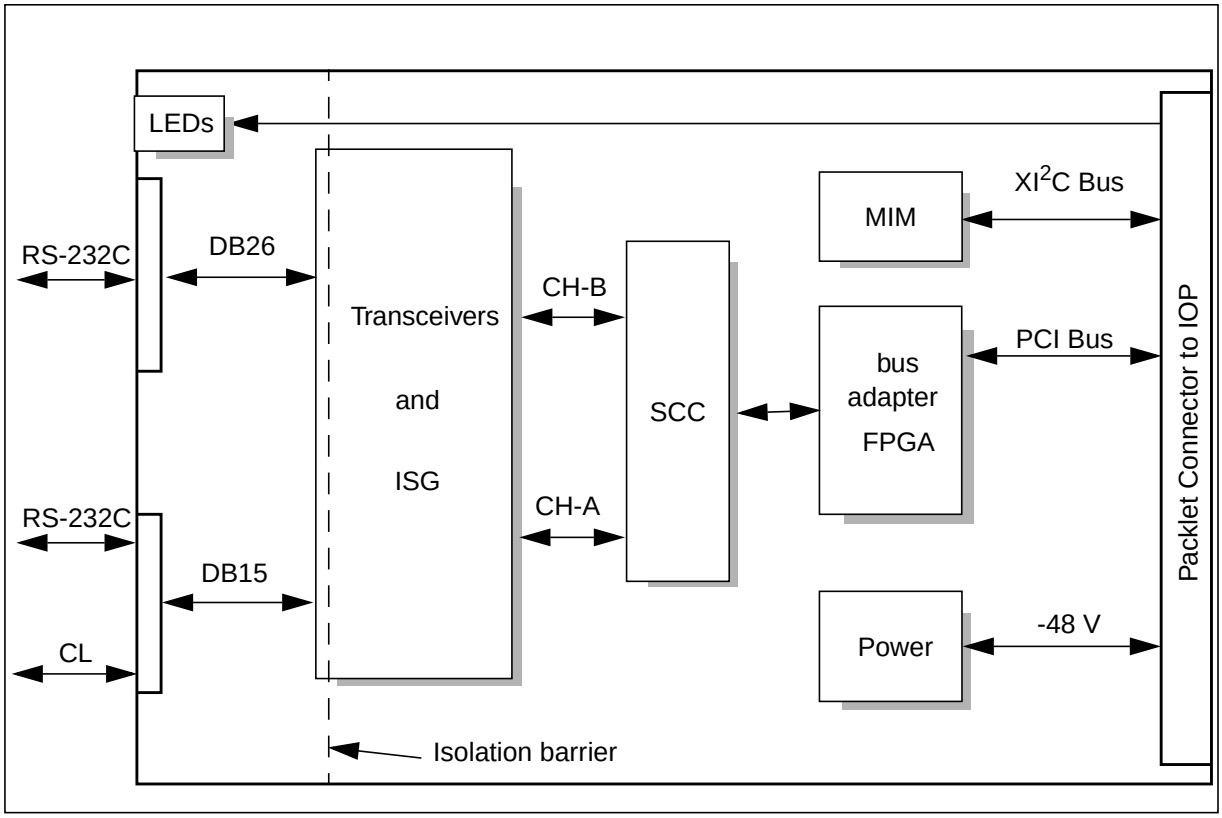

Bus adapter FPGA

The bus adapter FPGA is a single field programmable gate array (FPGA) chip that passes signals. The bus adapter FPGA transfers signals between the serial communication controller (SCC) and the packlet's IOP connector through the PCI bus. The bus adapter FPGA uses 5 V dc CMOS technology. The bus adapter FPGA operates only in pass through mode. Therefore, all signals transfer to and from the SCC directly without storage or manipulation.

The PCI bus receives signals from the IOP. The bus adapter FPGA receives these signals and transfers them to the SCC. Likewise, the bus adapter FPGA transfers signals from the SCC directly to the PCI bus. The IOP pack then receives these signals from the PCI bus.

SCC

The SCC provides a two channel interface between the PCI controller and the transceivers. Each channel is an independent, full-duplex channel. The SCC has a pair of 16.5 MHz baud rate generators (one per channel). These clock the signals transferred by the PCI controller to the transceivers. The SCC can operate in either local loopback or auto echo mode.

The SCC examines signals from the PCI controller. The SCC determines the destination for the signals and routes the signals to the appropriate channel and transceivers.

If the signals are for the local reset terminal, the SCC sends the signals over channel A. The transceivers receive the signals and convert them to voltages for RS-232C or Current Loop. After voltage conversion, the transceivers drive the signals to the RTIF faceplate high density DB15 connector for the local terminal.

If the signals are for the remote reset terminal, the SCC sends the signals over channel B. The transceivers receive the signals and convert them to voltages for RS-232C. After voltage conversion, the transceivers drive the signals to the RTIF faceplate high density DB26 connector for the remote reset terminal.

When the transceivers receive signals from a reset terminal, the transceivers convert the voltage and send the signals to the SCC. The SCC receives the signals and passes them to the FPGA. The FPGA sends the signals through the PCI bus to the packlet's IOP connector.

Transceivers

The packlet contains a pair of 5 V dc bipolar integral charge pump RS-232C transceivers. Each transceiver generates RS-232C voltage levels from a single 5 V dc power supply. The transceivers convert the signals received from the SCC to EIA standard RS-232C interface signals. The transceivers drive the signals to the DB15 faceplate connector for a local reset terminal or the DB26 faceplate connector for a remote reset terminal.

The transceivers convert RS-232C interface signals received from the reset terminal to voltages appropriate for the SCC. The transceivers then drive these signals over the appropriate channel to the SCC. Channel B carries signals from the remote terminal and channel A carries signals from the local terminal. The SCC receives the signals and passes them to the FPGA. The FPGA passes the signals to the PCI bus, through the packlet connector, and to the IOP.

The Current Loop (CL) transceiver generates Current Loop voltage signals from a single 5 V dc power supply. The transceiver converts serial signals received from the SCC to Current Loop interface signals. The transceiver drives the signals to the DB15 faceplate connector for a Current Loop compatible local reset terminal.

The transceiver converts Current Loop interface signals received from the reset terminal to voltages appropriate for the SCC. The transceiver then drives these signals over channel A to the SCC. The SCC receives the signals and passes

NTLX08 (continued)

them to the FPGA. The FPGA passes the signals to the PCI bus, through the packlet connector, and to the IOP.

Faceplate connectors

The remote DB26 pin faceplate connector is a high density 26 pin D-Sub female connector. The connector carries an RS-232C interface. Use this faceplate connector to connect a reset terminal located within the distance specified in EIA-232-C ANSI/EIA Interface Between Data Terminal Equipment Employing Serial Data Interchange. The isolated system ground (ISG) circuit isolates the remote DB26 pin connector from the packlet's power subsystem.

The local DB15 pin faceplate connector is a high density 15 pin D-Sub female connector. The connector carries an RS-232C and a Current Loop interface. However, only one reset terminal can connect to this faceplate connector at a time. Use this faceplate connector to connect to a reset terminal located within relative close proximity. The isolated system ground (ISG) circuit isolates the remote DB15 pin connector is from the packlet's power subsystem.

Fault subsystem

The IOP queries the possible faults and passes the information to the integrated test master (ITM). When received, the test controller generates a fault log which is sent through the XI2C bus to the MIM. If the fault is fatal, the test controller turns off the green LED and turns on the red LED.

Fault log information stored in the MIM can be read through the IOP's ITM. This information assists in testing and repairing a defective packlet. It simplifies the repair process and reduces the number of no fault found (NFF) conditions on packlets returned for repair.

MIM

The module information memory (MIM) is a non-volatile eight kbyte serial electrically erasable programmable memory (EEPROM) device. The MIM stores module identification information in the standard DMS-100 format used by all packs and packlets. The MIM contains information that identifies product engineering code (PEC), release, serial number, manufacturing date, and packlet operating parameters.

The MIM also stores fault log information generated by the integrated test master (ITM). The ITM is on the NTLX03AA/AB XA-Core IOP. The ITM communicates with the MIM over the XI2C bus.

LEDs

Three light emitting diodes (LEDs) indicate the status of the packlet. The packlet status is determined by the ITM on the NTLX03AA/AB XA-Core IOP.

The IOP's ITM controls the packlet's LED signals. LEDs turn on or off according to the alarm strategy for XA-Core.

Power subsystem

The packlet requires 5.0 V dc. The packlet receives an office battery power feed from the IOP pack through the packlet connector.

Power from the IOP packlet connector is fused through a 0.5 A fuse. It then passes through a field effect transistor (FET) inrush limiter. At power up or hot insertion, the FET slows the current that surges into the input capacitors for the Point of Use Power Supply (PUPS). Power is then applied to the PUPS. The PUPS converts the input voltage to 5.0 V dc. This 5.0 V dc power is the input to a second 5.0 V dc PUPS, which enables the isolation required for ISG. The first 5.0 V dc is also the input to the 3.3 V regulator. The resulting 3.3 V dc power feeds the MIM.

A low voltage supervisor integrated circuit (IC) monitors the power output from the 5.0 V PUPS. If the output voltage drops below 4.5 V dc, it sends a low voltage reset signal to the IOP pack. When triggered, the IOP sends a reset signal to the packlet.

Isolated system ground

The isolated system ground (ISG) circuit isolates the faceplate connectors from the packlet's power subsystem and communication signals. A set of optocouplers isolate the signals directed to each faceplate connector.

A second PUPS powers the optocouplers and transceivers that provide the isolation. The ground for this second PUPS is isolated from the rest of the board and therefore isolates the ground for all user connections.

Technical data

This section describes the technical specifications for the NTLX08 XA-Core Reset Terminal Interface packlet. The specifications include power requirements, status light emitting diodes (LEDs), technology, and equipment dimensions.

NTLX08 (continued)

Power requirements

The power requirements for the XA-Core Reset Terminal Interface packlet appear in the following table.

Power Requirements

Parameter	Min.	Nom.	Max.
Supply voltage (V dc)	-40	-48	-75
Supply current (A dc) @ -48 V dc	0.062	0.072	0.7

Status LEDs

The status LEDs are on the faceplate of the packlet. The ITM on the IOP pack controls the LEDs. The LEDs follow the alarm strategy for XA-Core. LED states for the external input status LED appear in the following table.

External Input Status LED

Amber	External Input Status
Off	All external inputs on the packlet that are currently provisioned appear to be receiving a valid signal.
On	At least one of the external inputs on the packlet that are currently provisioned does not appear to be carrying a valid signal.

NTLX08 (end)

The LED states for the packlet status LEDs appear in the following table.

Packlet Status LEDs

Green	Red	External Input Status
Off	Off	Unpowered, LED failure, or not inserted.
On	On	Powerup LED test or packlet self-test in progress.
On	Off	Packlet should not be removed. It is in service.
Off	On	Alarm state. Packlet may be removed.
Off	Wink	Packlet is being indicated as faulty. Packlet may be removed.

Technology

The NTLX08 uses surface mount technology where possible. The PUPS, LEDs, one capacitor, and all connectors use through-hole mount technology. All active components are on the primary side. Passive devices such as capacitors and resistors are on the either the primary or secondary side. The packlet is a ten layer printed circuit board made of epoxy-fiberglass (FR4) material.

Equipment dimensions

The dimensions of the packlet are:

- overall height: 110mm (4.37 in.)
- overall depth: 135mm (5.31 in.)
- overall width: 36mm (1.40 in.)

This page is left blank intentionally.

NTLX09AA

Product description

The NTLX09AA XA-Core Ethernet single port interface packlet provides the connection between the XA-Core shelf and the LAN hub and IP network.

The packlet is installed on the NTLX03AA/AB XA-Core Input/Output processor (IOP) pack and connects to the LAN through twisted-pair copper wire and the single Ethernet 10/100BaseT RJ45 Teladapt connector mounted on the face panel of the packlet.

Ethernet links can also be supported by other items of XA-Core hardware, the high performance input/output circuit pack (HIOP), NTLX04, and the high performance CMIC circuit pack (HCMIC), NTLX17. In an XA-Core shelf, you cannot use a mixture of ethernet packlets and circuit packs to support ethernet links. The permitted options are as follows.

- All ethernet links can be supported by ethernet packlets.
- All ethernet links can be supported by HIOP CPs.
- If there two HIOP CPs and two HCMIC CPs, then each can support an ethernet link.
- If there are no HIOP CPs and two HCMIC CPs, then each HCMIC CP can support an ethernet link.

Note: Manufacture of the NTLX09AA packlet was discontinued as of March 31, 2004.

The XA-Core shelf cannot contain both ethernet packlets (NTLX09) and HCMIC circuit packs (NTLX17).

The Category 5 Ethernet cable has a length restriction of 100 meters.

The packlet supports IEEE 802.3 framing, and multiprotocol encapsulation procedures are implemented according to ANSI T1.617 Annex F and RFC 1490. Protocols can be encapsulated using direct Network Layer Protocol Identifiers (NLPID), Subnetwork Access Protocol (SNAP) or NLPID for ITU-T Q.933.

The Ethernet packlet contains a full implementation of the UDP-TCP/IP standard, enabling the card to act as a router, and supports the following protocols and applications:

- Internet protocol (IP) v4, defined in RFC 791
- The Internet Control Message Protocol (ICMP), defined in RFC 792, which provides communication control functions

NTLX09AA (continued)

- Simple network management protocol (SNMP), defined in RFC 1213 and RFC 1315
- Routing information protocol (RIP) v1, defined in RFC 1058, which supports the variable length subnet mask and classless interdomain routing features from RIP v2
- Address resolution protocol (ARP), defined in RFC 826, which supports classic IP addressing extended to include recognition of subnet zero. Broadcast forwarding in a configurable capability.
- Transport control protocol (TCP), defined in RFC 793, enables connection-oriented transport services.
- The User datagram protocol (UDP) provides connectionless transport services.
- Path determination for routing is supported by dynamic routing (RIP), and configurable static and default routes.

The features of the NTLX09AA packlet are as follows:

- termination of a 10/100BaseT physical (PHY) link
- full duplex support at both 10 and 100 Mbit/s
- IEEE 802.3u Auto-negotiation support
- 32-bit multiplexed peripheral component interface (PCI) bus for connectivity to the IOP pack
- ITAG test interfaces of all devices except the Physical Link to PCI bus converter (82559 device) and the S-SRAM used as buffer memory

Location

The Ethernet packlet is installed in the lower packlet position of a single width NTLX03AA/AB XA-Core Input/Output processor (IOP) circuit pack.

If the XA-Core contains Ethernet packlets, there can be either two or four of them. If there are two Ethernet packlets, they install in IOP circuit packs in slots 5 rear and 14 rear. If there are four Ethernet packlets, they install in IOP circuit packs in slots 5 rear, 6 rear, 13 rear, and 14 rear. (Slot 12 rear can be used as an alternative.)

Layout

The following figure shows the external appearance of the XA-Core Ethernet single port interface packlet.

NTLX09AA Ethernet interface packlet

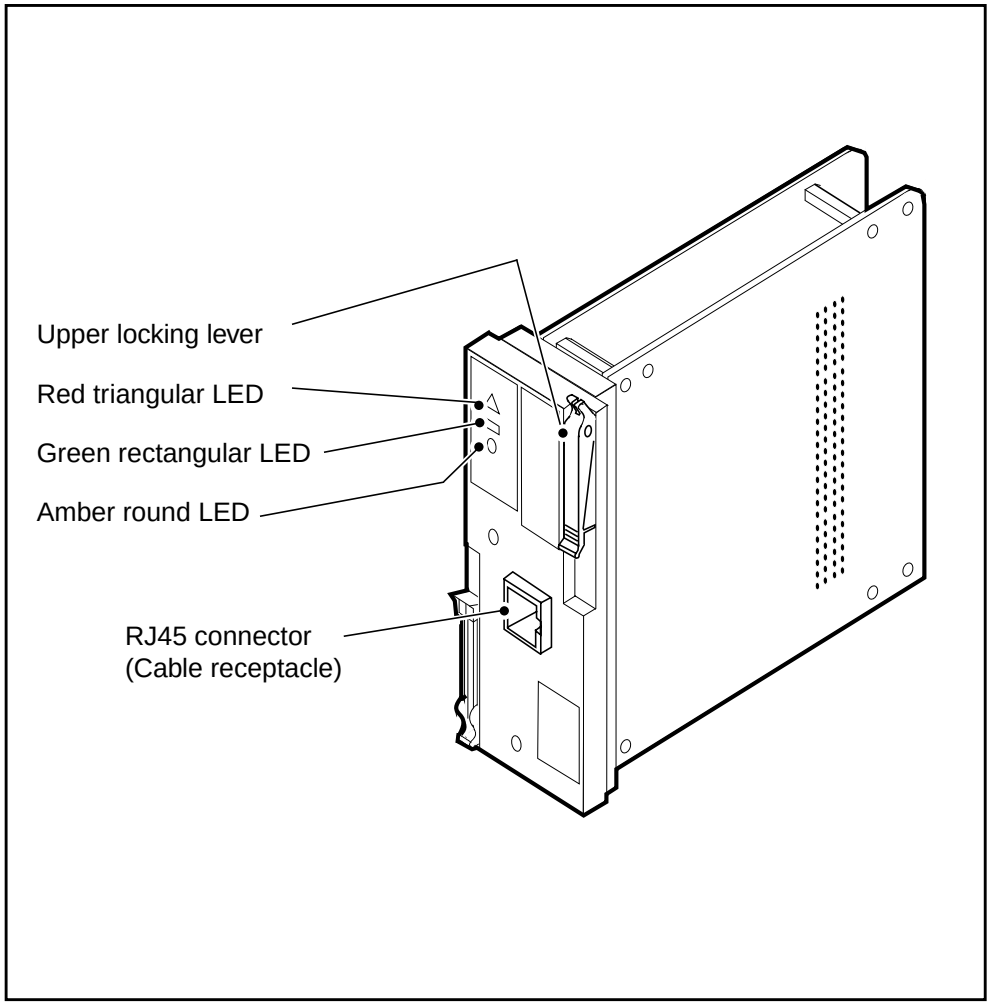

Functional description

The XA-Core Ethernet interface packlet provides a single communication link over twisted pair copper wire. This link provides the interconnect between the core and the LAN hub/IP network.

The packlet connects to the LAN hub through an RJ45 Teladapt connector and a Category 5 copper wire cable.

Functional blocks

The packlet consists of the following functional blocks:

- 25.00 MHz oscillator
- Intel i960 microprocessor

NTLX09AA (continued)

- FLASH memory
- synchronous static random access memory (S-SRAM)
- prefetcher field programmable gate array (FPGA)
- Intel Ethernet-PCI controller
- module information memory (MIM)
- clock subsystem
- isolation magnetics
- light emitting diodes (LEDs)
- power subsystem

The following figure shows the relationship between the functional blocks.

NTLX09AA (continued)

NTLX09AA functional blocks

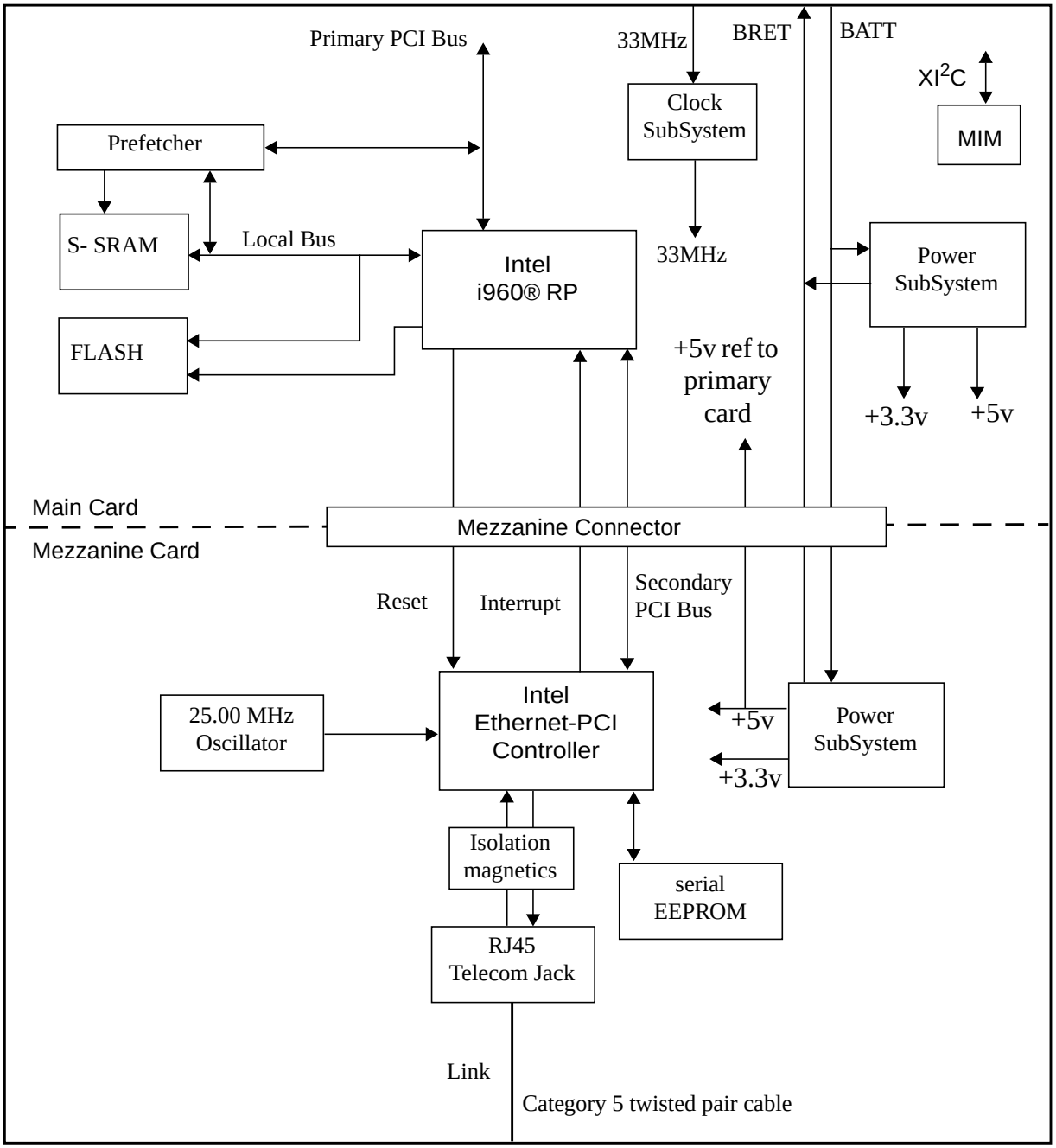

NTLX09AA (continued)

25.00 MHz oscillator

The oscillator drives the Media access controller (MAC) and Physical (PHY) layers of the 82559ER Ethernet controller.

i960 microprocessor

The i960 33MHz microprocessor integrates the functionality required to create an intelligent peripheral component interconnect (PCI) input/output (I/O) subsystem. The primary task of the microprocessor is to direct memory access in and out of the S-SRAM. The microprocessor fetches its code from FLASH memory upon bootup or reset, and uses the S-SRAM as code space and data store during regular operation.

The i960 microprocessor core is the Intel i960 JF processor. Integrated around the i960 JF processor core are the following peripherals required to complete the requirements of an intelligent PCI Input/Output subsystem:

- a pair of address translation units (ATUs) used to provide direct access between the PCI buses (primary and secondary) and the local bus
- a messaging unit (MU) used to provide the mechanism required to transfer data between the PCI buses and the microprocessor
- a set of four bus arbitration units used to provide the arbitrator logic control for bus mastership for the PCI buses and the local bus
- a direct memory access (DMA) controller used to provide the high throughput data transfers between the PCI buses and the microprocessor's on-board S-SRAM
- an integrated memory controller (MC) used to provide a direct connection between the microprocessor and the S-SRAM and FLASH memories
- an input/output advanced programmable interrupt controller (APIC) used to provide intelligent handling of PCI device interrupts by first filtering the interrupts and then selectively performing the interrupt processing

In the outgoing (transmit) direction, the serial signals output by the IOP pack through the IOP connector through the PCI bus to the Prefetcher are output by the Prefetcher through the local bus to a transmit buffer in S-SRAM. The microprocessor reads out the serial signals from the buffer, writes the converted signals into a transmit buffer in S-SRAM, and then forwards the signals to the Ethernet-PCI controller over the PCI bus.

In the incoming (receive) direction, the signals output by the Ethernet-PCI controller through the PCI bus are transferred directly through the local bus to S-SRAM.

Prefetcher

The prefetcher is a field programmable gate array (FPGA) which acts as direct memory access (DMA) controller for the Intel i960 microprocessor synchronous static random access memory (S-SRAM).

The Prefetcher DMA controller transfers signals from the transmit buffers in S-SRAM for outgoing signals and transfers signals to the receive buffers in S-SRAM for incoming signals. The DMA controller requests access to the S-SRAM from the Intel i960 microprocessor and waits until the request is granted in order to access S-SRAM.

In the outgoing (transmit) direction, the serial signals output by the IOP pack through the IOP connector over the PCI bus to the Prefetcher are output by the Prefetcher through the local bus to a transmit buffer in S-SRAM.

In the incoming (receive) direction, the signal output by the Ethernet-PCI controller through the PCI bus are transferred directly through the local bus to a Prefetcher receive buffer in S-SRAM. The microprocessor then informs the Prefetcher, by a write pointer update, that there are signals in the Prefetcher receive buffer. Upon receiving the pointer update, the Prefetcher reads out the serial signals from the buffer and outputs them through the PCI bus to the IOP connector (and on through the IOP pack and the XA-Core midplane to the appropriate shared memory pack).

FLASH memory

The FLASH memory is a 1M x 8 bit non-volatile memory containing all code and static data structures for the Intel i960 microprocessor. In order to benefit from faster access times, much of the code is copied from FLASH memory to the S-SRAM by the microprocessor upon bootup or reset, so that all subsequent code and data fetches will be from the S-SRAM. The synchronous static random access memory (S-SRAM) consists of two 128K x 36 bit S-SRAM ball grid array (BGA) devices which permit parity checking.

The dual bank architecture used in FLASH memory facilitates a fault tolerant strategy for in-service firmware upgrades.

S-SRAM

The synchronous static random access memory (S-SRAM) on the Ethernet packlet consists of two 128K x 36 bit S-SRAM ball grid array (BGA) devices which permit parity checking. The S-SRAM is used to store code for the Intel i960 microprocessor. This code is copied from FLASH memory to the S-SRAM by the microprocessor upon bootup or reset so that all subsequent code and data fetches are from the S-SRAM. This allows the microprocessor to benefit from faster access times related to execution out of FLASH memory.

NTLX09AA (continued)

The S-SRAM is also used to provided transmit and receive buffers for the Prefetcher which serves as the memory controller for the S-SRAM and performs the necessary parity verification.

Fault subsystem

The Intel i960 microprocessor, the Prefetcher and other supervision circuits perform a functional built in self test (BIST) in order to determine their operational status. If a persistent fault is detected, a fault message is generated. The fault message is output through the IEEE 1149.1 joint test access group (JTAG) bus to the test controller on the IOP pack into which the packlet is installed. Upon receipt of the fault message, the test controller generates a fault log which is output through the XI^2C bus to the MIM. If the fault is fatal, the test controller turns off the green LED and turns on the red LED. If the fatal fault was detected on an external input, the test controller will also turn on the amber LED.

MIM

The module information memory (MIM) is a non-volatile 32 KByte serial electrically erasable programmable memory (EEPROM) device. The MIM is used to store module identification information in the standardized DMS-100 format used by all packs and packlets. The MIM contains manufacturing information identifying product engineering code (PEC), release, serial number, manufacturing date, and packet operating parameters.

The MIM is also used to store fault log information generated by the test controller on the IOP pack into which the packlet is installed. The fault log includes the time and date of the fault, symptoms of the fault, location of the fault, and command or request that reported the fault. The fault log also contains the last three significant events that occurred on the packet as well as the last manual action which impacted the operation of the packet.

LEDs

Three light emitting diodes (LEDs) are used to indicate the current operational status of the packet. The operational status of the packet is determined by the test controller on the IOP pack into which the packlet is installed. The test controller communicates with each LED over the XI2C bus, causing the LED to turn on or off according to the alarm strategy for XA-Core.

Power subsystem

The packlet employes a mixed voltage design requiring 5.0 V and 3.3 V power. The packlet receives a pair of -48 Vdc or -60 Vdc office battery power feeds through the packlet connector from the IOP pack in which the packlet is installed.

The -48/-60 Vdc power fed in through the IOP packlet connector is first fused and then filtered. The filtered power is applied to a 3.3 V point of use power supply (PUPS) on the main board. The 3.3V output from the PUPS supplies the Intel i960 microprocessor, the S-SRAM, the FLASH memory, the Prefetcher, and the MIM on this board.

Since the mezzanine board requires both 3.3 V and 5.0 V, the -48/-60 Vdc power fed in through the IOP packlet connector, fused and filtered, is also applied to a 3.3 V PUPS on the mezzanine board. The PUPS 3.3V output powers two CMOC switched capacitor voltage inverters, stepping the voltage up to approximately 6.6 volts. The outputs are tied in parallel, and through resistors and a precision low drop out (LDO) regulator, the result is an output of 5.0 V. This provides the required reference voltage for the internal clamping diodes on the devices with Secondary PCI bus interfaces.

A low voltage supervisor integrated circuit (IC) monitors the power output from the 3.3 V PUPS. If the output falls below 2.9 Vdc, it disables both PUPS and sends a low voltage reset signal to the IOP pack. Once disabled, the power supply will not restart until the IOP pack generates a hard (power-up) reset on the packlet.

Technical data

This section describes the technical specifications for the NTLX09AA XA-Core Ethernet single-port interface packlet. The specifications include power requirements, status light emitting diodes (LEDs), technology, and equipment dimensions.

Power requirements

The power requirements for the XA-Core Ethernet interface packlet appear in the following table.

Power Requirements

Parameter	Min.	Nom.	Max.
Supply voltage (Vdc)	-36	-48/-60	-75.0
Supply current (Adc)		0.200	

Status LEDs

The status LEDs are contained on the faceplate of the packlet. The LEDs are controlled by two signals from the test controller on the IOP pack and follow

NTLX09AA (continued)

the alarm strategy for XA-Core. The LED states for the external input status LED appear in the following table.

External Input Status LED

Amber	External Input Status
Off	All external inputs on the packlet that are currently provisioned appear to be receiving a valid signal.
On	At least one of the external inputs on the packlet that are currently provisioned does not appear to be carrying a valid signal.

The LED states for the packlet status LEDs appear in the following table.

Packlet Status LEDs

Green	Red	External Input Status
Off	Off	Unpowered, LED failure, or not inserted.
On	On	Powerup LED test or packlet self-test in progress.
On	Off	Packlet should not be removed. It is in service.
Off	On	Alarm state. Packlet may be removed.
Off	Wink	Packlet is being indicated as faulty. Packlet may be removed.

Technology

The NTLX09AA uses surface mount technology where possible. The PUPS, edge connectors and some other components use through-hole technology. Most discrete components, including capacitors and resistors, are installed on the secondary side. The packlet is an eight layer printed circuit board employing epoxy-fiberglass (FR4) material.

NTLX09AA (end)

Equipment dimensions

The dimensions of the packlet are:

- overall height: 110mm (4.37 in.)
- overall depth: 135mm (5.31 in.)
- overall width: 36mm (1.40 in.)

This page is left blank intentionally.

NTLX10AA

Product description

The XA-Core cooling unit provides mechanical ventilation for all equipment contained in any XA-Core cabinet (SuperNode, SuperNode SE or Extension). The cooling unit contains three replaceable fan drawers and a single air filter. The unit installs in the lowest shelf position of the XA-Core cabinet and each of its fan drawers are accessible from the front of the cabinet.

The cooling unit's fans pull cool air into the base of the cabinet and force it through the filter. The air then circulates through each card module and exits out the top of the cabinet.

The XA-Core cooling unit is provisioned for dc voltage of either -48 Vdc or -60 Vdc and requires approximately 230 W during low speed operation, 300 W during normal (medium speed) operation, and 300 W during fan fail operation (two fans operating at high speed and one fan shutdown).

Redundancy is built into the multiple-fan design, allowing for a single-fan failure without loss of cooling air. If one fan fails, the remaining two adjust for loss of air pressure. The cooling unit provides 1000 CFM of continuous airflow under normal conditions and 900 CFM under single fan failure.

Layout

The following figure shows the configuration of the XA-Core cooling unit.

NTLX10AA (continued)

NTLX10AA XA-Core cooling unit assembly

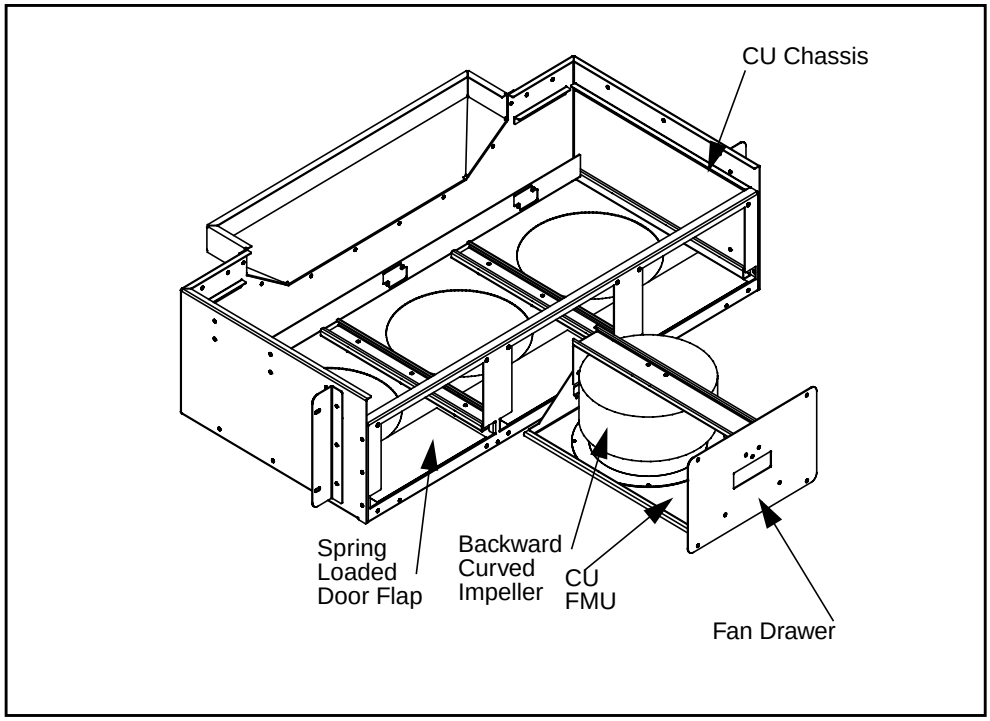

Components

The cooling unit contains the following components:

Qty	PEC	Description	Provisioning Rule
3	NTLX11AA	Cooling unit fan drawer	Always provided
1	A0662028	Cooling unit air filter	Always provided

Cooling unit fan drawer

Each cooling unit fan drawer is field replaceable. The fan drawer includes a sliding drawer, a fan management unit (FMU) providing power and alarm reporting, and a backward curved impeller. All fan drawers are identical and are inter-changeable between any of the three fan drawer positions located within the cooling unit. Any single fan drawer can be replaced without service disruption.

NTLX10AA (end)

Cooling unit air filter

The air filter tray, located at the top of the cooling unit immediately above the fan drawers, provides dust filtration. The air filter is made of cellulose fibre and is held in a steel mesh tray. The air filter tray slides into the top of the cooling unit and is held in position by friction (friction fit).

This page is left blank intentionally.

NTLX11AA

Product description

The XA-Core fan drawer includes a sliding drawer, a fan management unit (FMU) providing power and alarm reporting, and a backward curved impeller.

The XA-Core cooling unit contains three fan drawers. All three fan drawers are identical and are inter-changeable within the cooling unit. Any single fan drawer can be replaced without service disruption.

The face of the drawer has two light emitting diodes (LEDs). The LEDs indicate the working status of the fan. If the Red triangular LED is illuminated, the fan is not operating and it is safe to open the drawer. If the green rectangular LED is illuminated, the fan is operating and removal of the fan drawer will impact the cooling performance of the other fan drawers.

The XA-Core fan drawer is installed in the XA-Core cooling unit and is accessible from the front of the XA-Core cabinet. The drawer is fastened to the cooling unit chassis with two quarter turn fasteners. The fan drawer is grounded through the chassis to the cabinet with a maximum impedance of 0.1 ohms at 25 A. Power to the fan drawer is supplied by the office battery through a pair of blind mate connectors.

Layout

The following figure shows the configuration of the XA-Core cooling unit fan drawer.

NTLX11AA (end)

NTLX11AA XA-Core cooling unit fan drawer

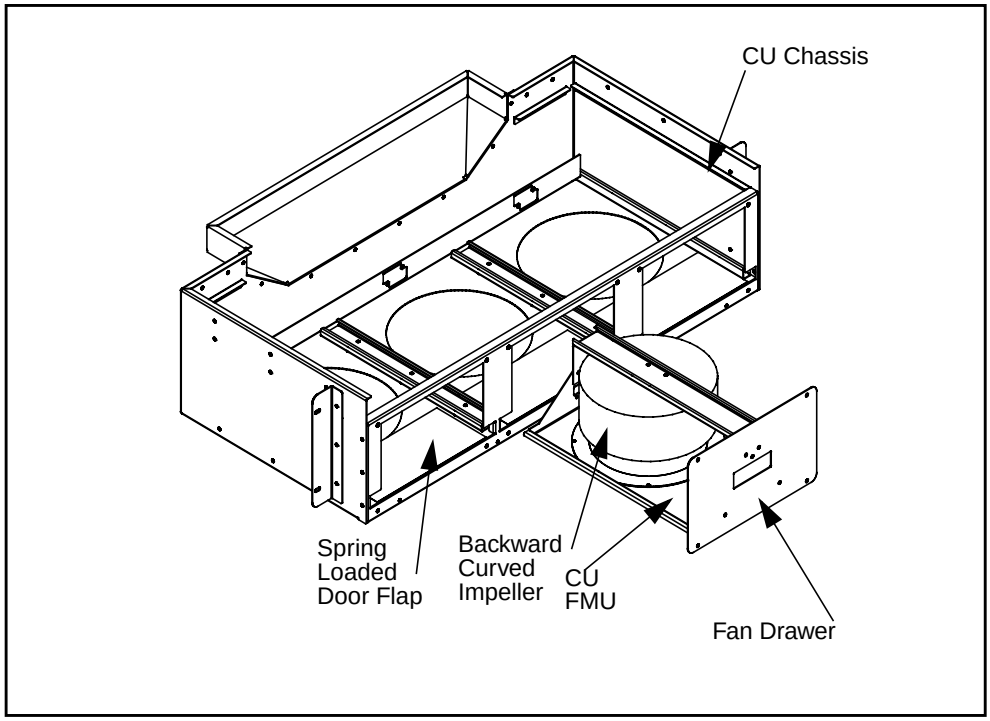

Components

The fan drawer contains the following component:

Qty	PEC	Description	Provisioning Rule
3	NTLX1101	Fan management unit (FMU)	Always provided

Fan management unit

The fan management unit (FMU) provides a +50 Vdc output to power a large backward curved impeller type fan. The unit also monitors all (three) fans in the XA-Core cooling unit. If a failure in another fan is detected, it will increase the speed of its own fan. If the unit or its fan fails, it will signal an alarm to the Frame Supervisory Panel (FSP) and signal the other FMUs in the cooling unit to increase the speed of their fans.

When the ambient temperature within the fan management unit (FMU) is low, it will reduce the speed of its fan in order to minimize acoustic noise.

NTLX1101

Product description

The NTLX1101 XA-Core cooling unit fan management unit (FMU) can accept normal input voltage of -38 Vdc to -72 Vdc from the standard office battery and supply +50 Vdc to a large backward curved impeller type fan.

The features of the NTLX1101 fan management unit are as follows:

- fully connectized interface
- current limiting start up circuit
- input capability of either -48 Vdc or -60 Vdc
- two 10 A inputs
- a single 4 A output
- unit “presence” capability
- frame supervisory panel (FSP) alarm interface

Location

The NTLX1101 XA-Core cooling unit fan management unit fits into one NTLX11AA XA-Core cooling unit fan drawer.

Layout

The following figure shows the configuration of the XA-Core cooling unit fan management unit (FMU).

NTLX1101 (continued)

NTLX1101 fan management unit

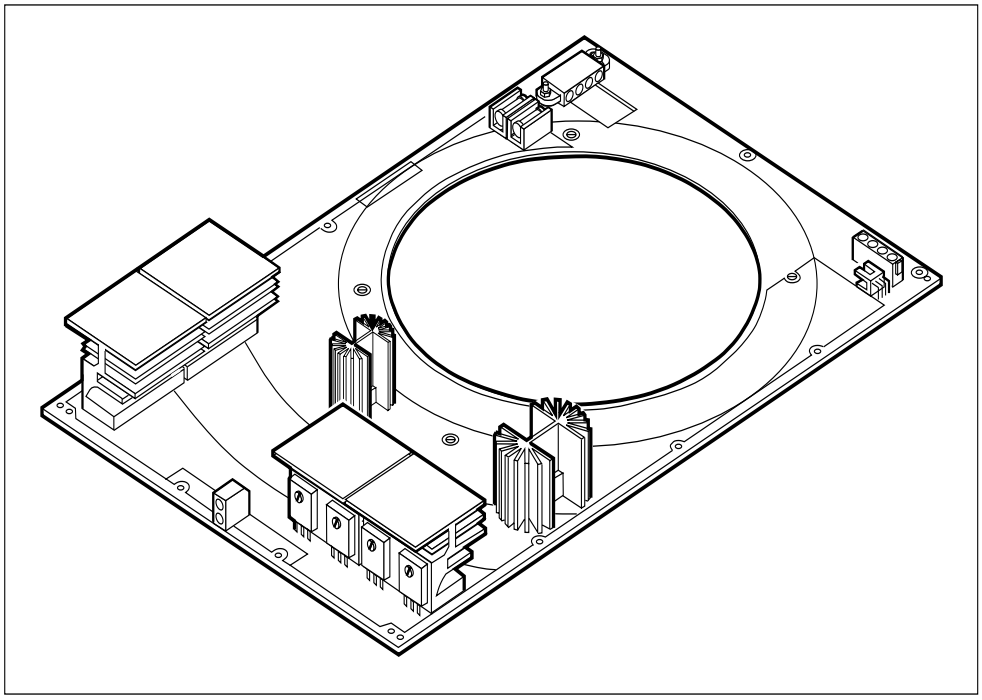

Functional description

The principle function of the fan management unit (FMU) is to provide a +50 Vdc output to power the FMU's large backward curved impeller type fan. The FMU also filters noise fed back to the office battery, and collects and reports alarms.

There are three cooling unit fan drawers within the XA-Core cooling unit. The fan management unit (FMU) within each fan drawer monitors all three fans in the XA-Core cooling unit. If a failure in another fan is detected, the detecting FMU increases the speed of its own fan. If the unit itself or its own fan fails, it will signal an alarm to the Frame Supervisory Panel (FSP) and signal the other FMUs in the cooling unit to increase the speed of their fans.

When the ambient temperature within the fan management unit (FMU) is low, it reduces the speed of its fan to minimize acoustic noise.

NTLX1101 (continued)

Functional blocks

The XA-Core cooling unit fan management unit consists of the following functional blocks:

- input fusing
- automatic recovery from low battery (ARLB) and soft start
- input filter
- power converter
- output filter
- current sensor
- start up supply
- pulse width modulation (PWM) and control
- output feedback
- overvoltage/undervoltage (OV/UV) protection
- fan monitor
- temperature speed control

The following figure shows the relationship between the functional blocks.

NTLX1101 (continued)

NTLX1101 functional blocks

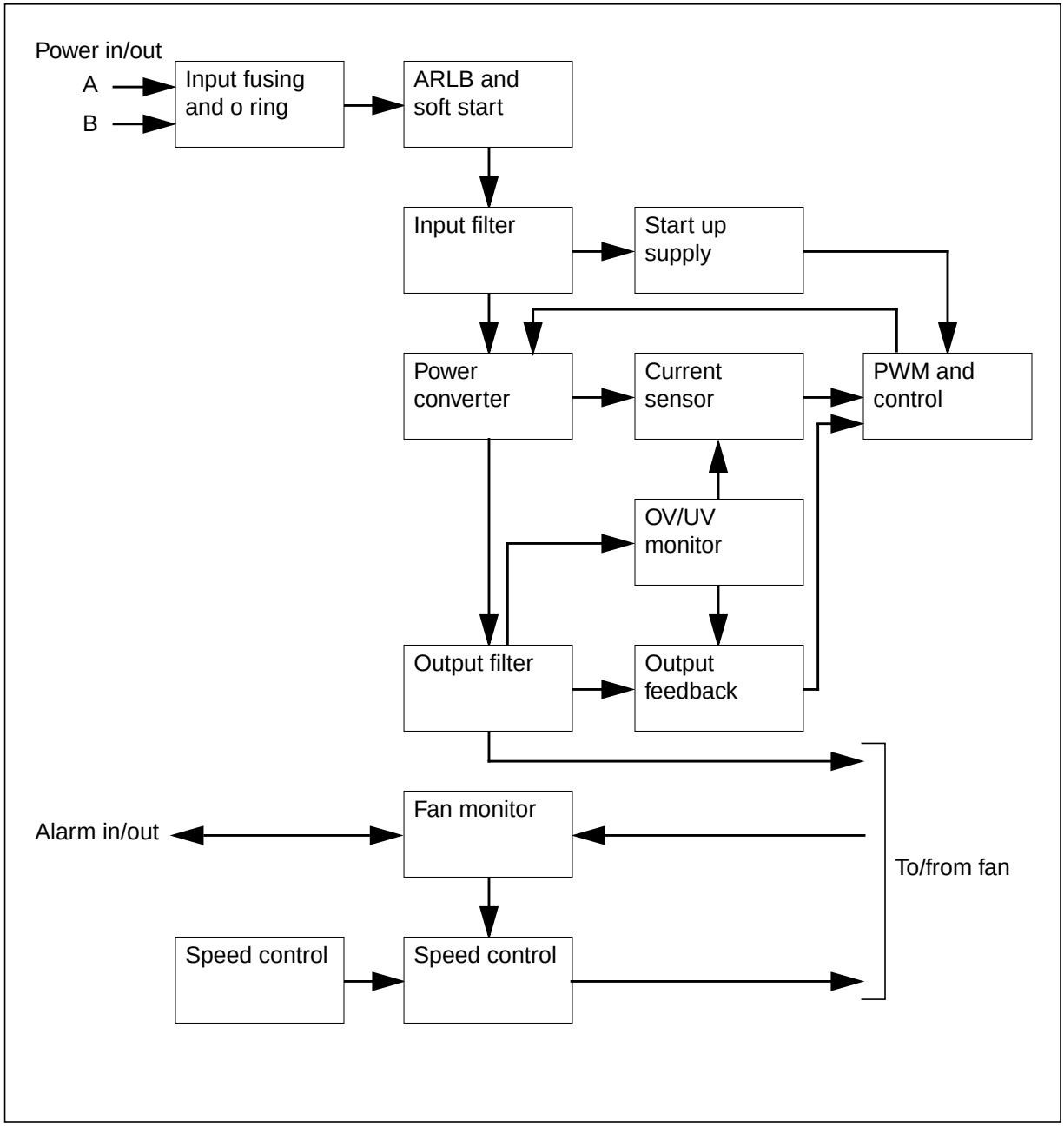

Input fusing

Power to the XA-Core cooling unit is provided by the office battery. The power supply to the cooling unit is connected by two 30A sources (“A” and “B”) for power redundancy. Each input is fused and then routed through an O ring diode to prevent backfeeding current. Each fuse output is monitored.

NTLX1101 (continued)

Automatic recovery from low battery (ARLB) and soft start

This block makes sure that the fan management unit (FMU) is gracefully connected to the power source. Power will be allowed to the remainder of the circuit when it is within an acceptable voltage range. The unit shuts down if the input voltage is below -33.5 Vdc and restarts at -36.0 Vdc, thus having a 2.5 volt hysteresis band. In addition, it acts as a current surge limiter circuit to avoid excessive current demand at startup, especially if the cooling unit fan drawer is hot swapped.

Input filter

This filter reduces switching noise fed back to the battery input. It includes both differential and common-mode filtering components. Power filtering is to limit high frequency noise and ripple current produced by the power converter switching the fan motor operation to less than 16dBrnc. The inductor used is connected in differential mode so that current differences between line and return are resisted, which in effect filters out noise transmitted to the battery.

Power converter

This block pulses the input voltage and steps it up through a transformer. The topology is standard center-tap push-pull using power field effect transistors (FETs) as switches. The drive circuit provides a regulated output voltage to the fan motor under a wide range of input voltages.

Output filter

The power is rectified after the transformer and then enters an inductor and capacitor (LC) filter before being supplied to the fan.

Current sensor

This block samples the input current through a current sense transformer, rectifies and filters it. This signal is then fed back to the pulse width modulator (PWM) for pulse-width control purposes. The fan management unit (FMU) converter requires a minimum load of 1.5A. The load is the fan operating at high, medium and low speeds which, in all cases, draws more than 1.5A.

Start up supply

This block provides power to the pulse width modulation (PWM) chip until the feedback loop is established.

Pulse width modulation (PWM) and control

This block controls the switching of the power converter field effect transistors (FETs), and provides features such as current limiting and shutdown.

NTLX1101 (continued)

Output feedback

This block samples the output voltage, compares it to a stable reference, and sends back the difference signal to the pulse width modulator (PWM) for pulse width control purposes.

Overvoltage/undervoltage (OV/UV) protection

An overvoltage or undervoltage condition on the +50 Vdc output will result in a shutdown of the fan management unit (FMU). The shutdown of the FMU causes the fan to stop rotating and to feed an alarm back to the FMU. This alarm is then reported to the other FMUs and to the office through the frame supervisory panel (FSP).

Fan monitor

The fan provides the fan management unit (FMU) with open collector speed alarm. When this external transistor is off it will be taken as an indication of fan failure (below 1000 rpm). Otherwise, there will be approximately 0 volts at the collector (external transistor on). When this circuit detects an alarm condition it signals the remaining two FMUs (causing them to go to high speed) and signals the FSP to raise a frame fail condition. Similarly, if the FMU receives a signal that one of its associated FMUs has failed, it increases the speed of it's own fan.

Temperature speed control

This circuit senses the ambient temperature within the fan management unit (FMU) and, if the ambient temperature is above +29 oCelsius (C) +/- 2 oC, it signals the fan to switch from low to medium speed. The signal clears (returns the fan to low speed) when the ambient temperature then falls below +24.9 oC +/- 2 oC. This circuit is bypassed when the FMU receives an alarm from one of its neighboring FMUs.

Technical data

This section describes the technical specifications for the NTLX01101 XA-Core cooling unit fan management unit (FMU). The specifications include power requirements, hardware interface, and equipment dimensions.

Power requirements

The power requirements for the XA-Core cooling unit fan management unit (FMU) appear in the following table.

Parameter	Min.	Nom.	Max.
Supply voltage (Vdc)	-38	-48/60	-75
Supply current (Adc)	1.5		10.0
Low battery shutdown (Vdc)	-31.5	-32.5	-33.5
Recovery from low battery shutdown (Vdc)	-34.5	-35.5	-36.0
Noise to battery (dBrnc)			16.0

Hardware interface

The hardware interface for the XA-Core cooling unit fan management unit (FMU) appear in the following table:

FMU Connector	Description	No. Pins
J1	Power Input	4
J2	External Alarm I/O Signal	6
J3	Fan Power and Alarm	4

NTLX1101 (end)

Fan Drawer Schematic

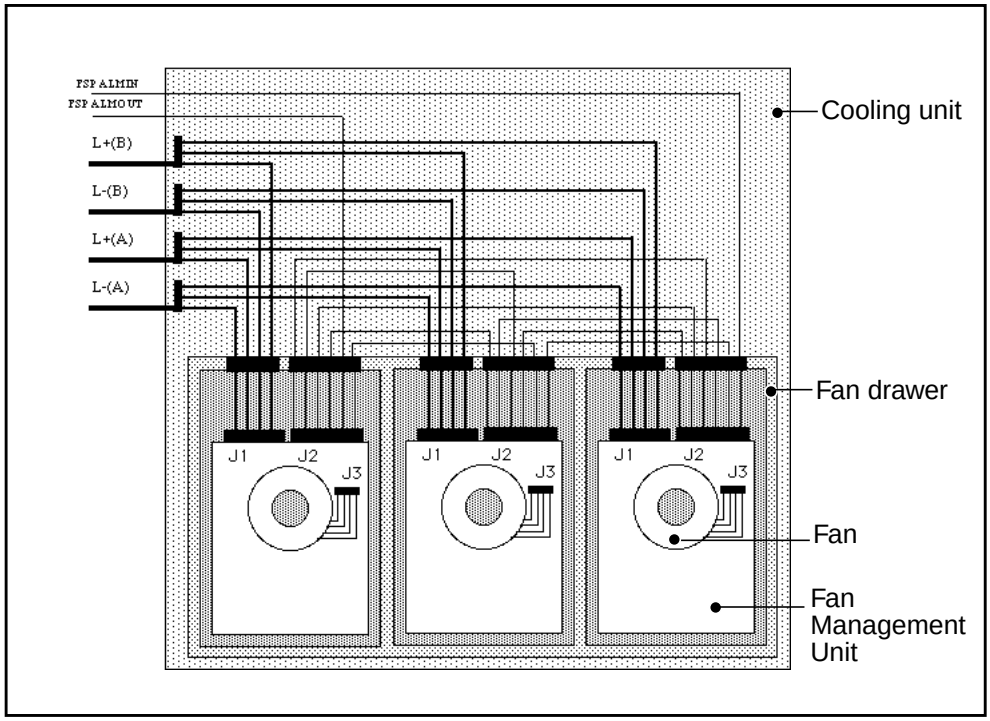

Equipment dimensions

The physical dimensions of the XA-Core cooling unit fan management unit (FMU) are:

- overall height: 114 mm (4.49 in.)
- overall depth: 370 mm (14.57 in.)
- overall width: 250 mm (9.84 in.)

NTLX12AA

Product description

The NTLX12AA XA-Core shelf interface module (SIM) can accept a normal input power feed of -38V to -72V at 30 A from the standard office battery and supply a -48V or -60V at 20 A power feed to the XA-Core shelf midplane assembly.

The features of the NTLX12AA shelf interface module are as follows:

- fully connectized interface
- current limiting start up circuit
- input capability of either -48 V or -60 V
- three 30 A inputs
- three 20 A outputs
- unit “presence” capability
- frame supervisory panel (FSP) alarm interface

Location

The shelf interface modules (SIMs) install in slots 03R and 16R on the rear side of the XA-Core midplane assembly. These midplane slots are located in the right and left exterior positions at the junction between the front and back sections of the XA-Core shelf. The SIMs install on the exterior of the shelf shielding.

The following figure shows the location of the XA-Core shelf interface modules.

NTLX12AA (continued)

NTLX12AA Shelf Interface Module Location

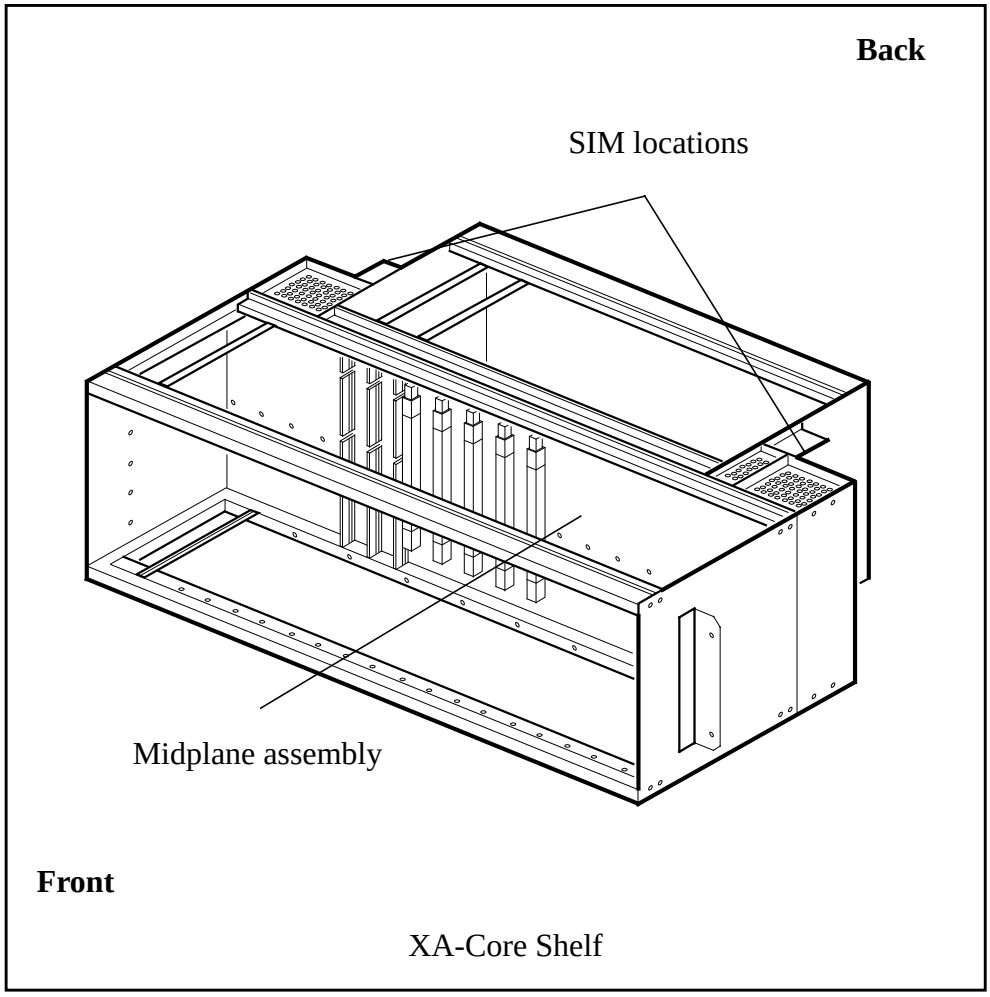

Layout

The following figure shows the configuration of the XA-Core shelf interface module (SIM).

NTLX12AA (continued)

NTLX12AA shelf interface module

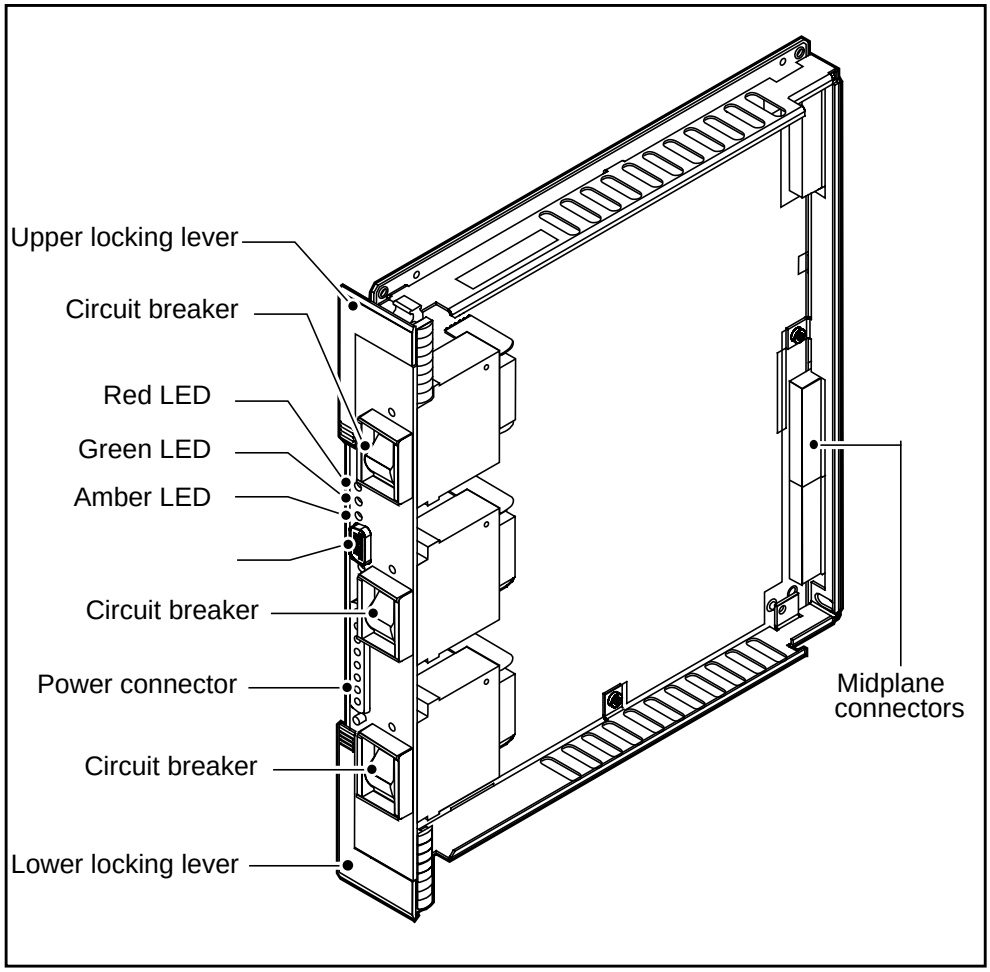

Functional description

The principle function of the shelf interface module (SIM) is to accept a normal input power feed of -38V to -75V at 30 A from the standard office battery and provide a stabilized, filtered -48 V or -60 V output at 20 A to power the XA-Core shelf midplane assembly.

The shelf interface module has been designed to accept up to three power input feeds. Each of these input feeds has a dedicated stability filter to prevent battery oscillation. A slow charge circuit has been included to prevent high current spiking during start-up. Each filtered feed is routed to the module's backplane output connector into which the XA-Core midplane assembly attaches.

NTLX12AA (continued)

The shelf interface module (SIM) also collects and reports a fail alarm to both the frame supervisory panel (FSP) and the shelf midplane assembly if it loses one or more of its office battery feeds.

External power cabling enters the C42 cabinet from overhead or from below the floor into the cable risers and terminate at the XA-Core shelf filter bulkheads. The internal XA-Core shelf cables are routed between the bulkheads and SIM faceplate power connectors through a cable trough at the base of the shelf. Cables are managed using the cable management fingers provides in the cable trough.

Power cabling entering the C42 cabinet from overhead is distributed as follows:

- power feeds route directly from the power distribution center (PDC) to the cabinet, through the cable risers on each side of the cabinet, and on to the XA-Core left filter bulkhead (NTLX0104) and right filter bulkhead (NTLX0105).
- power feeds are terminated at each XA-Core filter bulkhead via a filtered terminal block.
- internal power cables carry power from the filtered terminal block at the bulkhead to the SIM faceplate power connectors where the cables are terminated.

Power cabling entering the C42 cabinet from below floor is distributed as follows:

- power feeds route directly from the power distribution center (PDC) through the cabinet base to the inside of the filtered terminal block of the XA-Core left filter bulkhead (NTLX0104) and right filter bulkhead (NTLX0105).
- internal power cables carry power from the filtered terminal block at the bulkhead to the SIM faceplate power connectors where the cables are terminated.

The following figure shows the power distribution cabling for the XA-Core C42 cabinet.

NTLX12AA (continued)

Power cabling

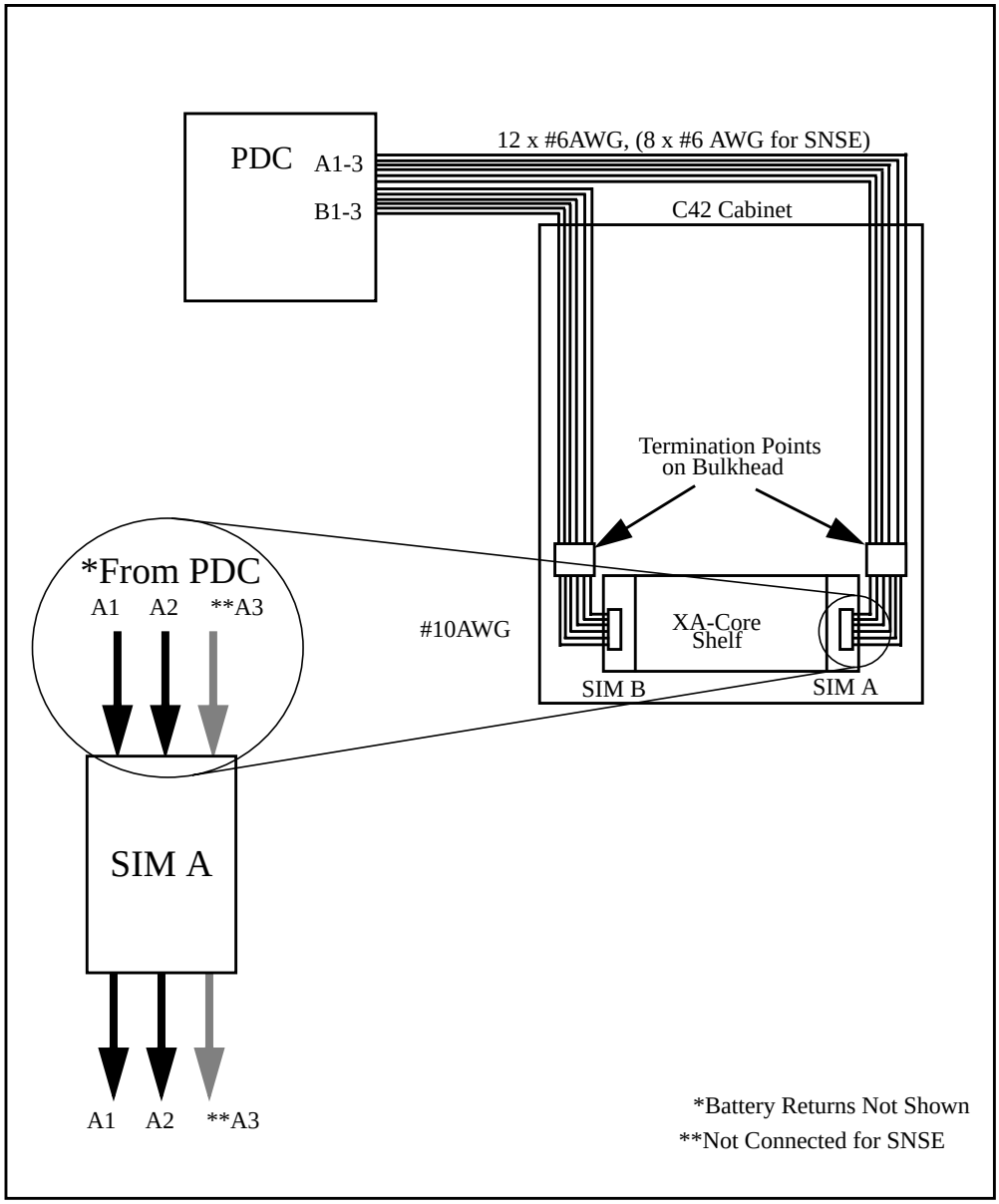

Functional blocks

The shelf interface module consists of the following functional blocks:

- EMI bulkhead filters
- stability filter

NTLX12AA (continued)

- alarm and monitoring
- 20A circuit breakers

The following figure shows the relationship between the functional blocks.

NTLX12AA functional blocks

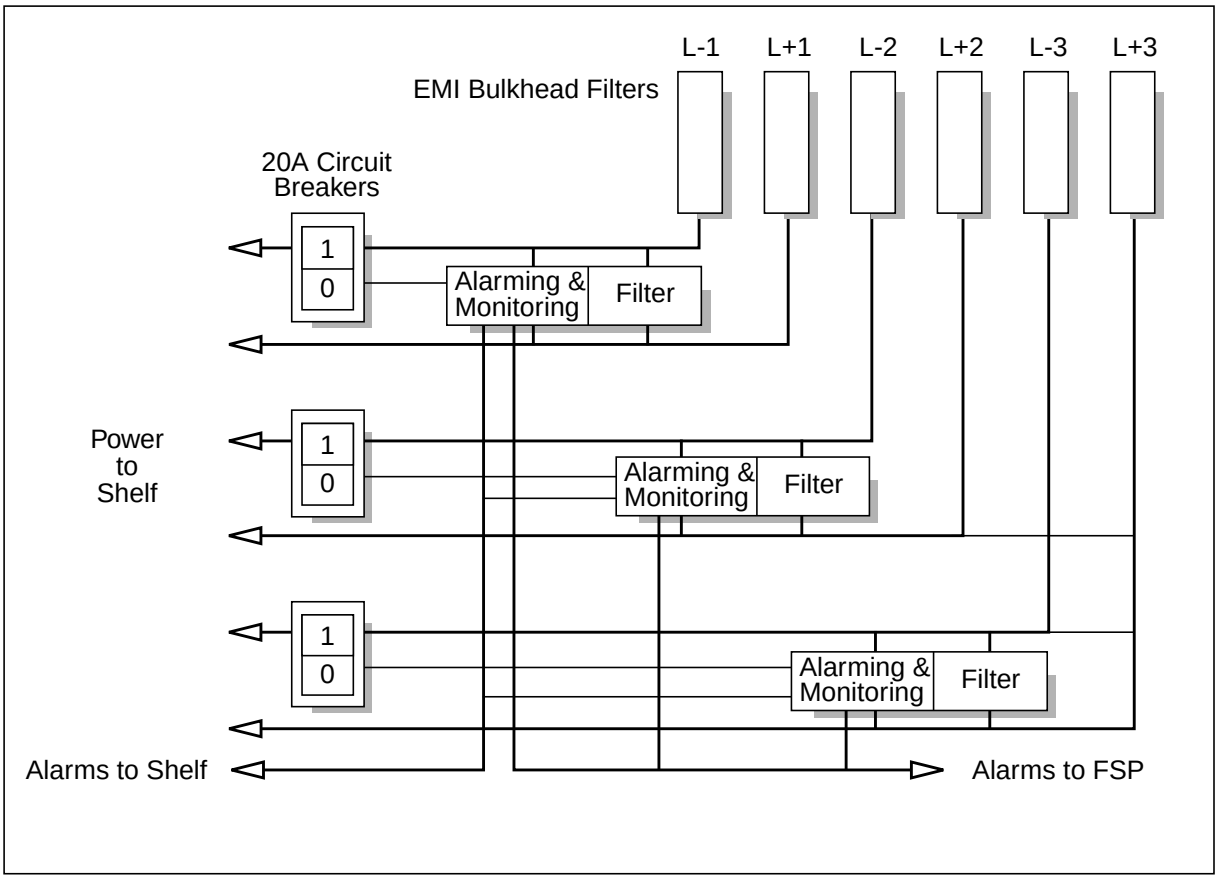

EMI bulkhead Filter

Power to the shelf interface module (SIM) is provided by the office battery. The power supply to the SIM is connected by two or three 30A sources (L1 and L2 and, optionally, L3) for power redundancy. Each input is passed through an electromagnetic interference (EMI) shielding filter.

Filter

Across each power feed is a low frequency stability filter. On application of input power, the charging circuit in the filter disconnects a discharge resistor and begin to slow charge the filter capacitors. The filter capacitors have a very low ESR to keep the output impedance as low as possible. When charging is

completed, a relay is energized which shunts out the charging circuit, thereby forming a low impedance path for the capacitors.

The filter capacitors are protected by a 10 A protection fuse, while the remainder of the low frequency stability filter circuitry is protected by a 2.0 A circuit protection fuse.

Alarm and monitoring

Across each power feed is a filter fail relay. On application of input power, each filter fail relay is energized, causing the faceplate mounted green light emitting diode (LED) to turn on. Each energized filter fail relay turns off a transistor connected with the faceplate mounted amber LED, preventing it from turning on. Each energized filter fail relay also turns off a transistor connected with the faceplate mounted red LED, preventing it from turning on.

Loss of input power to one of the filter fail relays (or circuit breaker off or blown filter protection fuse or blown circuit protection fuse) causes the relay to de-power. De-powering one of the filter fail relays causes a transistor connected with the amber LED to turn on, turning on the amber LED. De-powering one of the filter fail relays disconnects battery return (BRET) from the faceplate alarm connector, signalling the frame supervisory panel (FSP) to raise a frame fail alarm. De-powering one of the filter fail relays also causes the de-powering (opening) of a failure detect relay, which signals the XA-Core shelf of the detection of a power failure through the backplane connector.

Loss of input power to all filter fail relays (or all circuit breakers off) causes all the relays to de-power. De-powering all filter fail relays causes the faceplate mounted green light emitting diode (LED) to turn off and the transistor connected with both the amber LED and the red LED to turn on, turning on the amber LED and the red LED (with power supplied by the FSP). De-powering all the filter fail relays disconnects battery return (BR) from the faceplate alarm connector, signalling the frame supervisory panel (FSP) to raise a frame fail alarm. De-powering all the filter fail relays also causes the de-powering (opening) of a failure detect relay, which signals the XA-Core shelf of the detection of a power failure through the backplane connector

Circuit breakers

The 20A circuit breakers allows power shutdown to the XA-Core midplane before removal of the shelf interface module (SIM). The SIM does not support live insertion.

Technical data

This section describes the technical specifications for the NTLX12AA XA-Core shelf interface module (SIM). The specifications include power

NTLX12AA (continued)

requirements, module status light emitting diodes (LEDs), technology, and equipment dimensions.

Power requirements

The power requirements for the XA-Core shelf interface module (SIM) appear in the following table.

Power Requirements

Parameter	Min.	Nom.	Max.
Supply voltage (Vdc)	-38	-48/60	-75
Supply current (Adc)		30.0	

Status LEDs

The status LEDs are contained on the front of the module. The LED states for the module status LEDs appear in the following table.

Module Status LEDs

Green	Amber	Red	Module Status
Off	Off	Off	Unpowered, LED failure, or not inserted.
On	Off	Off	Module in service. It should not be removed.
On	On	Off	Alarm state. Failure on board or input feed unpowered or circuit breaker off. Module remains in service. It should not be removed.
Off	On	On	Alarm state. All input feeds unpowered. Module may be removed.

Technology

The NTLX12AA uses both through-hole and surface-mount technology. A new capacitor with pre-trimed leads (680uF 80V) is used to provide stability to the power circuit. The module is an eight layer printed circuit board employing epoxy-fiberglass (FR4) material.

NTLX12AA (end)

Equipment dimensions

The physical dimensions of the XA-Core shelf interface module (SIM) are:

- overall height: 287mm (11.3 in.)
- overall depth: 200mm (7.87 in.)
- overall width: 405mm (1.60 in.)

This page is left blank intentionally.

NTLX14CA

Product description

The XA-Core Shared Memory 384 MB pack provides shared memory capability for both global data store and master copy program store. Each shared memory (SM) pack contains one complete copy of global data store and a master copy of program store. A copy of program store is also cached locally on each processor element (PE) pack. Shared memory supplies 384 MBytes of logical memory capacity.

Each shared memory pack communicates with all installed input/output processor (IOP) packs and processor element (PE) packs. A shared memory pack cannot communicate with any other shared memory pack. All transmit links out of all PE and IOP packs are monitored by all SM packs. All transmit links out of a SM are monitored by all PE and IOP packs. An address field in every transaction allows each pack to determine if that transaction is destined for it.

The shared memory pack provides for the mutual exclusion of data necessary to allow multiple processors to execute simultaneously. This mutual exclusion is based on the concept of ownership of data. Once a processor (PE) accesses a piece of data, its owns that data until it is done with it. If a second processor attempts to access that data before it has been released by the first, the shared memory pack will send a collision notification to the second processor, telling it to terminate the data access. This blocking will cause the second processor to abort its execution and notify shared memory to return all of the data changed by the aborted task to their previous values. This is termed a process rollback. The processor then re-runs the scheduler to pick up an alternate task and returns the aborted task to the scheduler so that it can be attempted later.

The features of the NTLX14CA pack are as follows:

- provision of 384 MBytes of logical memory using 768 MBytes of physical memory
- provision of a dynamic memory ownership protocol which eliminates memory contention among tasks requiring access to shared memory
- provision of rollback logic which undoes any failed process
- provision of error checking and correction (ECC) to identify and/or correct read/write faults to/from shared memory
- provision of programmable access restrictions to prevent memory corruption by a faulty input/output processor (IOP) or processor element (PE) pack
- provision of pass through mode for connectivity between processor element (PE) packs and input/output processor (IOP) packs

NTLX14CA (continued)

- provision of a physical and data interface to the midplane
- support for extended architecture interface (XAI) protocol transactions
- support for duplex, triplex, and update operations
- provision of structural and functional built in self testing (BIST) as well as reset logic for the pack
- provision of two alarm light emitting diodes (LEDs)

Location

The following SM configurations are supported: 4+1, 5+1, 6+1, 7+1, 8+1, 9+1, and 10. Any supported SM configuration can be installed with any supported PE configuration. (For information on supported PE configurations, see the descriptions of the NTLX02CA and NTLX02DA circuit packs in this chapter.)

Note 1: In an XA-Core shelf in a SuperNode SE cabinet (NTLX01BA), the maximum number of SM circuit packs is seven in most cases. For information on the exceptional cases, see "Restrictions for an XA-Core shelf in a SuperNode SE (NTLX01BA) cabinet" in the chapter titled "Introduction".

Note 2: The “10” configuration uses ten SM circuit packs with no redundancy. In such a system there are 1920 MBytes of addressable memory. This configuration is used only with certain products in CSP21.

The following table lists the slot locations of the shared memory circuit packs for each of the supported SM configurations.

Locations for shared memory circuit packs

	Slots
4+1	7F, 8F, 10F, 11F, 7R
5+1	7F, 8F, 10F, 11F, 7R, 9R
6+1	7F, 8F, 10F, 11F, 7R, 9R, 10R
7+1	7F, 8F, 10F, 11F, 7R, 8R, 9R, 10R
8+1	7F, 8F, 9F, 10F, 11F, 7R, 8R, 9R, 10R
9+1	7F, 8F, 9F, 10F, 11F, 7R, 8R, 9R, 10R, 11R
10	7F, 8F, 9F, 10F, 11F, 7R, 8R, 9R, 10R, 11R

NTLX14CA (continued)

Layout

The following figure shows the external appearance of the XA-Core shared memory circuit pack.

NTLX14CA shared memory circuit pack

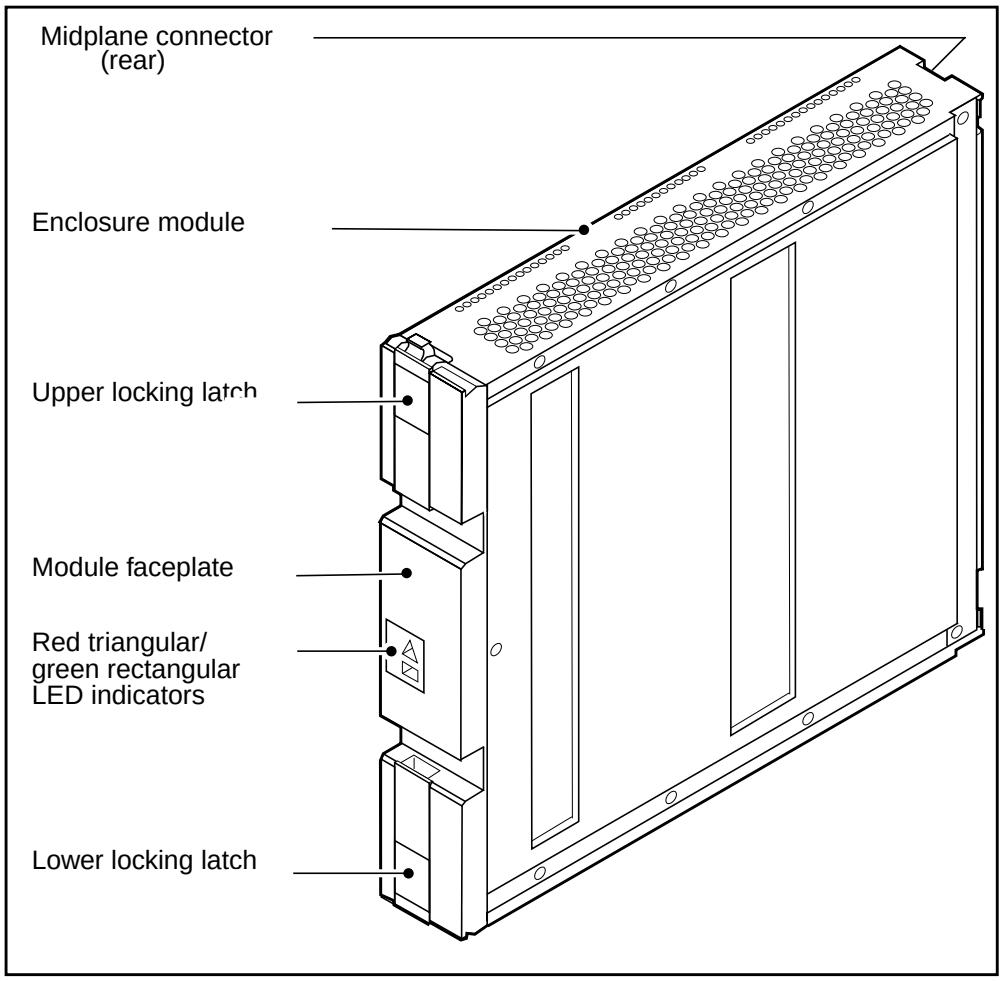

Functional description

The XA-Core Shared Memory 384 MB pack provides shared memory capability for both global data store and master copy program store. A copy of program store is also cached locally on each processor element (PE) pack. The pack's main memory supplies 384 MBytes of logical memory capacity. Main memory is configured as six 128 MByte memory modules. Each memory module consists of eighteen 64 Mbit synchronous dynamic random access memory (SDRAM) devices.

NTLX14CA (continued)

Since no processor element (PE) pack or input/output processor (IOP) pack can communicate directly, the shared memory pack provides pass through connectivity between PE and IOP packs.

The shared memory pack connects to the XA-Core midplane through a vertical slot connector. The shared memory pack XA-Core midplane interface includes four pulse receiver chips (PRCs) and two pulse transmitter chips (PTCs). It provides connectivity between the XA-Core midplane and the shared memory pack.

The shared memory pack supports independent programmable access restrictions that enable it to prevent access to specified regions of shared memory. By limiting the regions of shared memory accessible to a particular input/output processor (IOP) pack, the pack limits the potential impact of an IOP failure. Access restrictions also permit different regions of shared memory to be assigned to the old and new portions of XA-Core during a software update.

The shared memory pack employes a copy A/B accessing scheme. Duplication consists of randomly pairing 32 MByte blocks of memory across the memory modules, the only rule being that a mated pair cannot reside on the same module. Accordingly, it requires 768 MBytes (configured as six 128 MByte memory modules) of physical memory to supply 384 MBytes of logical memory.

In the incoming (receive) direction, the XAI signals output by an input/output processor (IOP) pack or a processor element (PE) pack over the midplane are received by one of the pulse receiver chips, which demultiplexes the signal and outputs a PECL signal to a shared memory ownership and access controller (SMOAC). The SMOAC writes the task identification number (TIN) of the task requiring memory access into ownership memory in order to obtain ownership of the lines of main memory to be accessed. Once ownership of the lines of main memory has been obtained, the data is written into main memory, line by line, by the SMOAC. As soon as the task accessing main memory has completed, the SMOAC will release ownership of the lines of main memory by removing the TIN of the completed task from ownership memory.

In the outgoing (transmit) direction, the XAI signals output by an input/output processor (IOP) pack or a processor element (PE) pack over the midplane are received by one of the pulse receiver chips, which demultiplexes the signal and outputs a PECL signal to the SMOAC. The SMOAC writes the task identification number (TIN) of the task requiring memory access into ownership memory in order to obtain ownership of the lines of main memory to be accessed. Once ownership of the lines of main memory has been obtained, each line of main memory is read out by the SMOAC. The data read

out are converted to XAI signals, which are then applied to one of the pulse transmitter chips. The pulse transmitter chip multiplexes the signal and transmits the multiplexed XAI signal over the midplane to all input/output processor (IOP) packs and processor element (PE) packs. As soon as the task which owns a line of main memory has successfully completed, the SMOAC will release ownership of the line of main memory by removing the TIN of the completed task from ownership memory.

Functional blocks

The pack consists of the following functional blocks:

- midplane interface (I/F)
- shared memory ownership and access controller (SMOAC)
- ownership memory
- main memory
- reset controller
- test controller
- light emitting diodes (LEDs)
- module information memory (MIM)
- clock subsystem
- power subsystem

The following figure shows the relationship between the functional blocks.

NTLX14CA (continued)

NTLX14CA functional blocks

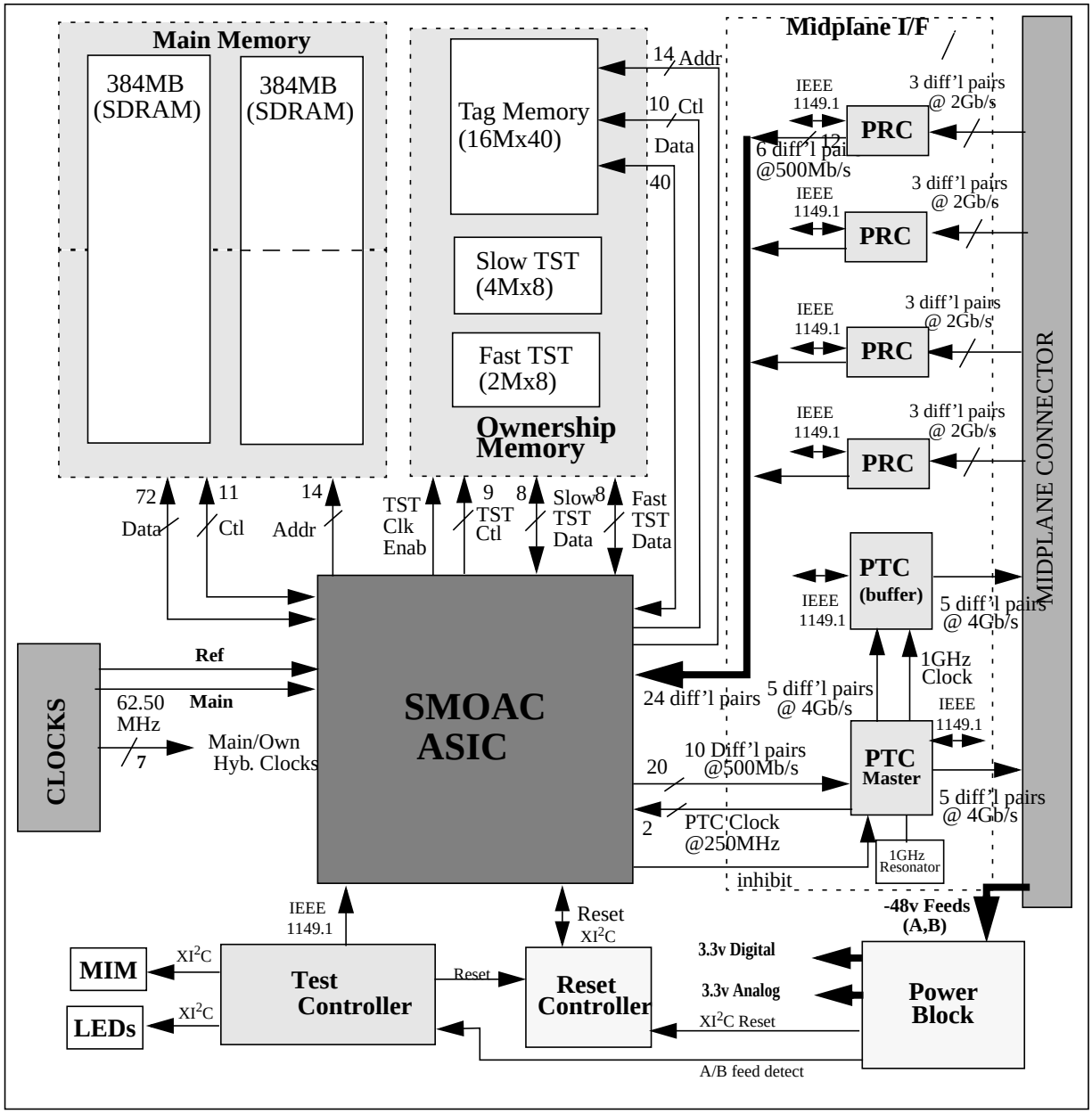

Midplane interface

The midplane interface consists of four pulse receiver chips (PRCs) and two pulse transmitter chips (PTCs). It provides connectivity to the XA-Core midplane, primarily for read/write access to shared memory.

NTLX14CA (continued)

Each pulse receiver chip (PRC) is an application specific integrated circuit (ASIC) in a 256 super ball grid array (SBGA) package, employing low voltage, 0.5 micron BICMOS technology. Each pulse receiver chip provides four receive ports. Each port receives a pair of 1 GByte/sec links through the midplane, each of which is demultiplexed into two 500 MByte/sec links and transmitted, at differential PECL compatible levels, to the shared memory ownership and access controller (SMOAC).

Each pulse transmitter chip (PTC) is an application specific integrated circuit (ASIC) in a 168 super ball grid array (SBGA) package, employing low voltage. 0.5 micron BICMOS technology. Each pulse transmitter chip receives eight 500 MBytes/sec links from the SMOAC, which are multiplexed into four 1 GByte/sec links and transmitted through the midplane to all input/output processor (IOP) packs and processor element (PE) packs.

In the incoming (receive) direction, the XAI signals output by an input/output processor (IOP) pack or a processor element (PE) pack through the midplane are received by one of the pulse receiver chips, which demultiplexes the signals and outputs PECL signals to the SMOAC.

In the outgoing (transmit) direction, the XAI signals output by the SMOAC are applied to one of the pulse transmitter chips. The pulse transmitter chip multiplexes the signals and then transmits the multiplexed XAI signal through the midplane to all input/output processor (IOP) packs and processor element (PE) packs.

SMOAC

The SMOAC supports duplex, triplex, and update modes of shared memory operation. The SMOAC provides ownership protection for each block (line) of shared memory through the implementation of an ownership protocol which allows either exclusive access, shared read access or unowned read access to shared memory on a line by line basis.

The shared memory ownership and access controller (SMOAC) is an application specific integrated circuit (ASIC) in a 624 pin ceramic column grid array (CCGA) package, employing low voltage CMOS5S technology. The SMOAC is used to control access to shared memory as well as pass signals between processor element (PE) packs and input/output processor (IOP) packs.

To improve reliability, the SMOAC includes independent programmable access restrictions that enable it to restrict access to specified regions of shared memory. By limiting the regions of shared memory accessible to a particular input/output processor (IOP) pack or processor element (PE) pack, the SMOAC limits the potential impact of a processor failure. Access restrictions

NTLX14CA (continued)

also permit different regions of shared memory to be assigned to the old and new portions of XA-Core during a software update.

The SMOAC supports most extended architecture (XAI) protocol transactions, including reset commands and external interrupts. The SMOAC also detects faults in the midplane by cyclic redundancy checking each pulse receiver chip's incoming (receive) ports. When a fault is detected, the SMOAC inhibits the operation of the pulse transmitter chips (PTCs) and does not allow the PTCs to return to operation until the fault has been cleared.

The SMOAC implements an error checking and correction (ECC) scheme used to identify and correct read/write faults to/from shared memory. The SMOAC also identifies and discards all duplicate data it receives from the midplane interface pulse receiver chips.

Ownership memory

Ownership memory is used to store the information required to execute ownership transactions on main memory. Memory ownership is done on a per line basis. To acquire ownership of a line of memory, a task needs the SMOAC to write its task identification number (TIN) into ownership memory. Ownership memory consists of a tag memory block, a fast TIN state table (TST) block, and a slow TIN state table (TST) block.

The tag memory block provides 16 MBytes x 40 bits of memory capacity using ten 64 MBytes x 8 bit synchronous dynamic random access memory (SDRAM) devices which incorporates error checking and correction (ECC). The tag memory block stores the task identification number (TIN) of every task accessing main memory.

The fast TIN state table (TST) memory block provides 2 MBytes of memory capacity using four 1 MByte x 4 bit asynchronous static random access memory (SRAM) devices. The fast TST memory block stores the state of all tasks accessing main memory in two STATE bits which identify the memory operation being performed. The fast TST is used to identify the memory operation to be rolled back whenever a rollback operation is required.

The slow TIN state table (TST) memory block provides 4 MBytes of memory capacity using eight 1 MByte x 4 bit static random access memory (SRAM) devices. The slow TST memory block is used to store the owner identification (OID) of the task. The slow TST is used to identify the owner (task) of the memory operation to be rolled back whenever a rollback operation is required.

Whenever the SMOAC receives a request to access shared memory, it first checks the tag memory block to ensure that each requested line of main memory to be accessed is available. It then writes the TIN of the task accessing

main memory into tag memory in order to tag each line of main memory as owned by the task. A latch latches the two STATE bits of the TIN and reads them into the fast TIN state table. A second latch latches the ten OID bits of the TIN and reads them into the slow TIN state table.

Main memory

Main memory provides shared memory capability for both global data store and master copy program store. A copy of program store is also cached locally on each processor element (PE) pack. Main memory supplies 384 MBytes of logical memory capacity. Main memory is configured as six 128 MByte memory modules. Each memory module consists of eighteen 64 Mbit synchronous dynamic random access memory (SDRAM) devices which support error checking and correction (ECC).

Main memory employes a copy A/B accessing scheme. Duplication consists of randomly pairing 32 MByte blocks of memory across the memory modules, the only rule being that a mated pair cannot reside on the same module. Accordingly, it requires 768 MBytes of physical memory to supply 384 MBytes of logical memory.

Reset controller

The reset controller is a low voltage CMOS programmable logic device (CPLD) used to collect and analyze all reset requests as well as issue the appropriate reset command. Reset requests and reset status are transmitted to and from the SMOAC over a two wire serial XI2C bus.

The shared memory pack implements three levels of reset severity: power up reset, hard reset, and soft reset. Power up and hard resets initiate structural tests and initialize all the components on the pack. Soft resets preserve the current content and state of all memories and registers. A soft reset re-initializes selective components on the pack.

Reset requests can originate from the SMOAC, the test controller, or the power supervisory circuits. Reset requests are sent through the XI2C bus to the reset controller. Once a reset request has been received by the reset controller, it is analyzed to determine its source and whether a hard reset or a soft reset is required. If the reset request is a power up reset request or a hard reset request, the reset controller generates a hard reset command to all components on the pack. If the reset request is not a power up or hard reset request, a soft reset is required. The reset controller analyses the reset request in order to determine which components require resetting, and then generates a soft reset command to those components.

NTLX14CA (continued)

Test controller

The test controller consists of the following components, which together coordinate all structural tests on the pack, including built in self tests (BIST) of the SMOAC, the four pulse receiver chips, the two pulse transmitter chips, as well as the test controller itself:

- Intelligent test controller (ITC), used to execute the design for testability (DFT) firmware which coordinates all structural test on the pack. The ITC also controls the two light emitting diodes (LEDs) used to indicate the current operational status of the pack. The ITC is a low power integrated multiprotocol processor (IMP) running in microcontroller mode. The ITC includes 1.0 MByte of FLASH memory, which contains all the code and static data structures for the processor.
- 1.0 MByte of read only memory (ROM), which contains all the code and static data structures for the integrated multiprotocol processor (IMP).
- Integrated test master (ITM), used to provide access to the JTAG bus by the ITC, as well as access to the reset controller, the module information memory (MIM) and the two light emitting diodes (LEDs). The ITM is a custom application specific integrated circuit (ASIC) operating under the control of the ITC.
- Module information memory (MIM), used to store module identification information as well as fault log information generated by the integrated test controller.
- Two light emitting diodes (LEDs), used to indicate the current operational status of the pack.

The SMOAC, the four pulse receiver chips, the two pulse transmitter chips, and the test controller perform a functional built in self test (BIST) in order to determine their operational status. If a persistent fault is detected, a fault message is generated. The fault message is output through the IEEE 1149.1 joint test access group (JTAG) bus to the test controller. Upon receipt of the fault message, the test controller generates a fault log which is output through the XI2C bus to the MIM. If the fault is fatal, the test controller turns off the green LED and turns on the red LED as well as setting a status register on the SMOAC to failed, taking the pack out of service.

Whenever a power up or hard reset is performed, the test controller runs a scan test of the pack to ensure that the scannable components are operating properly. If a fault is detected, the test controller generates a fault log which is output through the XI2C bus to the MIM. If the fault is fatal, the test controller turns off the green LED and turns on the red LED as well as setting a status register on the SMOAC to failed, taking the pack out of service.

The fault log information stored in the MIM can be output to a JTAG device connected to the JTAG bus. This information will assist in testing and repairing defective packs, simplifying the repair process and reducing the number of no fault found (NFF) conditions on packs returned for repair.

LEDs

Two light emitting diodes (LEDs) are used to indicate the current operational status of the pack. The operational status of the pack is determined by the test controller. The test controller communicates with each LED over the XI2C bus, causing the LED to turn on or off according to the alarm strategy for XA-Core.

MIM

The module information memory (MIM) is a non-volatile 32 KByte serial electrically erasable programmable memory (EEPROM) device. The MIM is used to store module identification information in the standardized DMS100 format used by all packs and packlets. The MIM contains manufacturing information identifying product engineering code (PEC), release, serial number, manufacturing date, and pack operating parameters.

The MIM is also used to store fault log information generated by the test controller. The fault log includes the time and date of the fault, symptoms of the fault, location of the fault, and command or request that reported the fault. The fault log also contains the last three significant events that occurred on the pack as well as the last manual action which impacted the operation of the pack.

Clock subsystem

The clock subsystem provides stable clock signals to the shared memory pack components. A 62.5 MHz crystal oscillator drives a low skew distribution clock driver, which distributes the clock signal to all the components on the pack.

The clock subsystem also provides an independent reference clock signal to the SMOAC. A 62.5 MHz crystal oscillator drives a reference clock signal to the SMOAC.

A 33.3 MHz crystal oscillator on the test controller drives a multiple output buffer/divider, which supplies a 33.3 MHz clock signal and a 16.7 clock signal (by dividing by two) required by the test controller.

Power subsystem

The pack employes a 3.3 Vdc voltage design. The pack receives a pair of -48 Vdc or -60 Vdc office battery power feeds from the XA-Core midplane through the midplane slot connector.

NTLX14CA (continued)

Each -48/60 Vdc power fed in through the midplane slot connector is first fused through a 3.0 Amp fuse and then passed through a high frequency LC pi filter consisting of ferrite beads and ceramic capacitors. Each filtered power feed is then ORed through a pair of common anode power diodes and passed through a field effect transistor (FET) inrush current limiter. The power is then low frequency filtered by passing it through a common mode inductor followed by a low frequency LC pi filter consisting of two 47uF electrolytic capacitors and a 10uH inductor. The filtered power is then applied to a 3.3 V "analog" point of use power supply (PUPS). The high efficiency dc-dc power transformer in the PUPS converts the input voltage to 3.3 Vdc. The output voltage is filtered through a large (approximately 10 uF) electrolytic capacitor and a ceramic capacitor and then passed through an LC pi noise reduction filter consisting of a 1uH inductor and a pair of 10uF ceramic capacitors. The resulting 3.3 Vdc @ 33W analog voltage feeds the four pulse receiver chips (PRCs) and the two pulse transmitter chips (PTCs).

The -48/60 Vdc power fed in through the midplane slot connector, fused and filtered, is also applied to a 3.3 V "digital" point of use power supply (PUPS). The high efficiency dc-dc power transformer in the PUPS converts the input voltage to 3.3 Vdc. The output voltage is filtered through a large (approximately 10 uF) electrolytic capacitor and a ceramic capacitor. The resulting 3.3 Vdc @ 50W digital voltage feeds the main memory, ownership memory, SMOAC, and all the remaining 3.3 volt "digital" components on the pack.

A supervisory circuit monitors the power output of the "analog" PUPS while a second supervisory circuit monitors the output of the "digital" PUPS. If either supervisor detects low output voltage, it causes the reset controller to generate reset command to all components on the pack.

A simultaneous shutdown circuit monitors the power output of both PUPS. If the circuit senses a drop in the output of either PUPS below a preset level (caused by a PUPS fault or blowing of an input fuse), the circuit will shut down both PUPS. Both PUPS will remain shut down until the problem causing the drop in power output has been corrected.

Technical data

This section describes the technical specifications for the NTLX14CA XA-Core shared memory pack. The specifications include power requirements, pack status light emitting diodes (LEDs), technology, and equipment dimensions.

Power requirements

The power requirements for the XA-Core shared memory pack appear in the following table.

Power Requirements

Parameter	Min.	Nom.	Max.
Supply voltage (Vdc)	-37	-48/60	-75
Supply current (Adc)		1.0	2.0

Status LEDs

The status LEDs are contained on the front of the pack. The LEDs are controlled by two signals from the test controller and follow the alarm strategy for XA-Core. The LED states for the pack status LEDs appear in the following table.

Pack Status LEDs

Green	Red	External Input Status
Off	Off	Unpowered, LED failure, or not inserted.
On	On	Powerup LED test or pack self-test in progress.
On	Off	Pack should not be removed. It is in service.
Off	On	Alarm state. Pack may be removed.
Off	Wink	Pack is being indicated as faulty. Pack may be removed.

Technology

The NTLX14CA uses surface mount technology where possible. The PUPS, edge connectors and some other components use through-hole technology. Only passive components, including capacitors and resistors, are installed on the secondary side. The pack uses a fourteen layer printed circuit board employing epoxy-fiberglas (FR4) material.

NTLX14CA (end)

Equipment dimensions

The dimensions of the NTLX14CA pack are:

- overall height: 300mm (11.81 in.)
- overall depth: 280mm (11.02 in.)
- overall width: 48.7mm (1.92 in.)

NTLX17

Product description

The NTLX17AA high performance CMIC (HCMIC) circuit pack is a unitary circuit pack. It does not house packlets as the NTLX03 circuit pack does. The HCMIC CP contains on-board components to support links. Each HCMIC circuit pack supports two OC-3 core-to-message-switch-interconnect (CMIC) links and two RTIF links. In addition, each HCMIC circuit pack can also support one ethernet link.

> ***Note:*** The XA-Core shelf can support a maximum of four ethernet links. If the shelf contains four HIOP circuit packs (NTLX04), then the HIOPs support the ethernet links. If the shelf contains fewer than four HIOPs (that is, two or none), then each HCMIC can support an ethernet link.

If HCMIC circuit packs support a certain type of links (CMIC, RTIF, or ethernet), then packlets are not used to support links of the same type. It is not permitted to use a mixture of packlets and HCMICs for the same link application. Furthermore, if the XA-Core shelf contains HCMIC circuit packs, then ethernet packlets (NTLX09) are not permitted in the shelf.

Each HCMIC circuit pack received time-of-day information from the far-end node, and has two time-of-day devices (TOD).

The HCMIC has the following I/O interfaces:

- two CMIC ports, each joined to an OC-3 multi-mode fiber link pair by an SC connector (one Rx link and one Tx link per port)

  > ***Note:*** The HCMIC has multimode OC-3 transceivers. This differs from the HIOP, which has single-mode OC-3 transceivers.

- two RS-232C (RTIF) interfaces
- one ethernet port joined to a 10/100BT link by an RJ-45 connector

The CMIC, ethernet, and RS-232 interfaces are serviced by a communication processor module, the MPC8260. The interfaces are controlled through the core processor, the MPC7410. The processors are linked by a common bus. Also attached to the bus are the Nortel-designed RHINO ASIC and PIGI ASIC. The RHINO is a memory controller. The PIGI is the interface to the XA-Core by way of the XAI midplane. The PIGI provides access to system memory and gives the system software access to the HCMIC.

NTLX17 (continued)

The HCMIC circuit pack has the following memory configuration:

- 128 megabytes (MB) of local SDRAM
- two banks of 2 MB FLASH ROM
- 2 MB of SDRAM attached to the MPC8260 local bus, providing the a secondary memory storage location for the MPC8260 processor
- 2 MB backside L2 cache on the MPC7410 processor, running at a maximum frequency of 180 MHz

Location

The HCMIC circuit packs install in slots 4R and 15R.

Layout

The following figure shows the external configuration of the high performance CMIC circuit pack.

NTLX17 high performance CMIC circuit pack front and side views

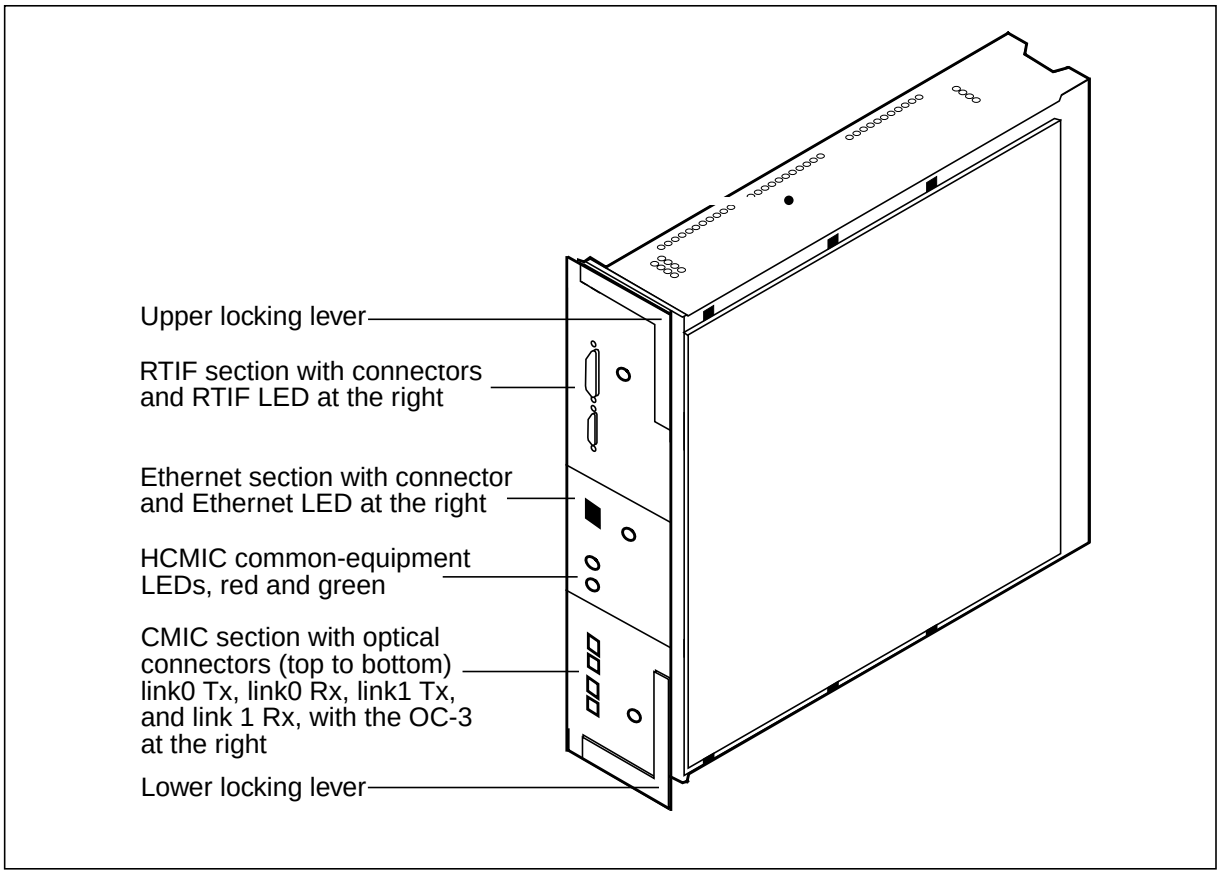

Functional description

The main features of the HCMIC CP are

- OC-3 interface block
- Fast ethernet interface block. Supports fast ethernet port 10/100BASE-TX.
- RTIF interface block
- TOD FPGA block. Receives time-of-day (TOD) information from the far-end node and has two TOD devices.
- PQII - MPC8260 communications processor. This is the communication processor for the I/O interfaces.
- PPC - MPC7410 processor. This is the core engine of the CP.
- RHINO memory controller.
- External arbiter. Arbitrates among the devices that can command control of the bus: the MPC8260 processor, the MPC7410 processor, and PIGI. The arbiter also handshakes with RHINO.
- SDRAM block.
- FLASH memory block.
- PIGI (processor interface to gigabit interconnect). This is a logical layer on top of the XAI. It makes the XAI transparent to the core logic.
- XAI (XA-interconnect) interface block. XAI provides very high speed transmit and receive channels between the HCMIC CP and the shared memory CPs in the XA-Core.
- Test block. The test block executes board-level tests after power-up, after hard resets, and when requested by system maintenance software.
- Power block.

NTLX17 (continued)

The following figure shows the relationships among the functional blocks.

NTLX17 block diagram

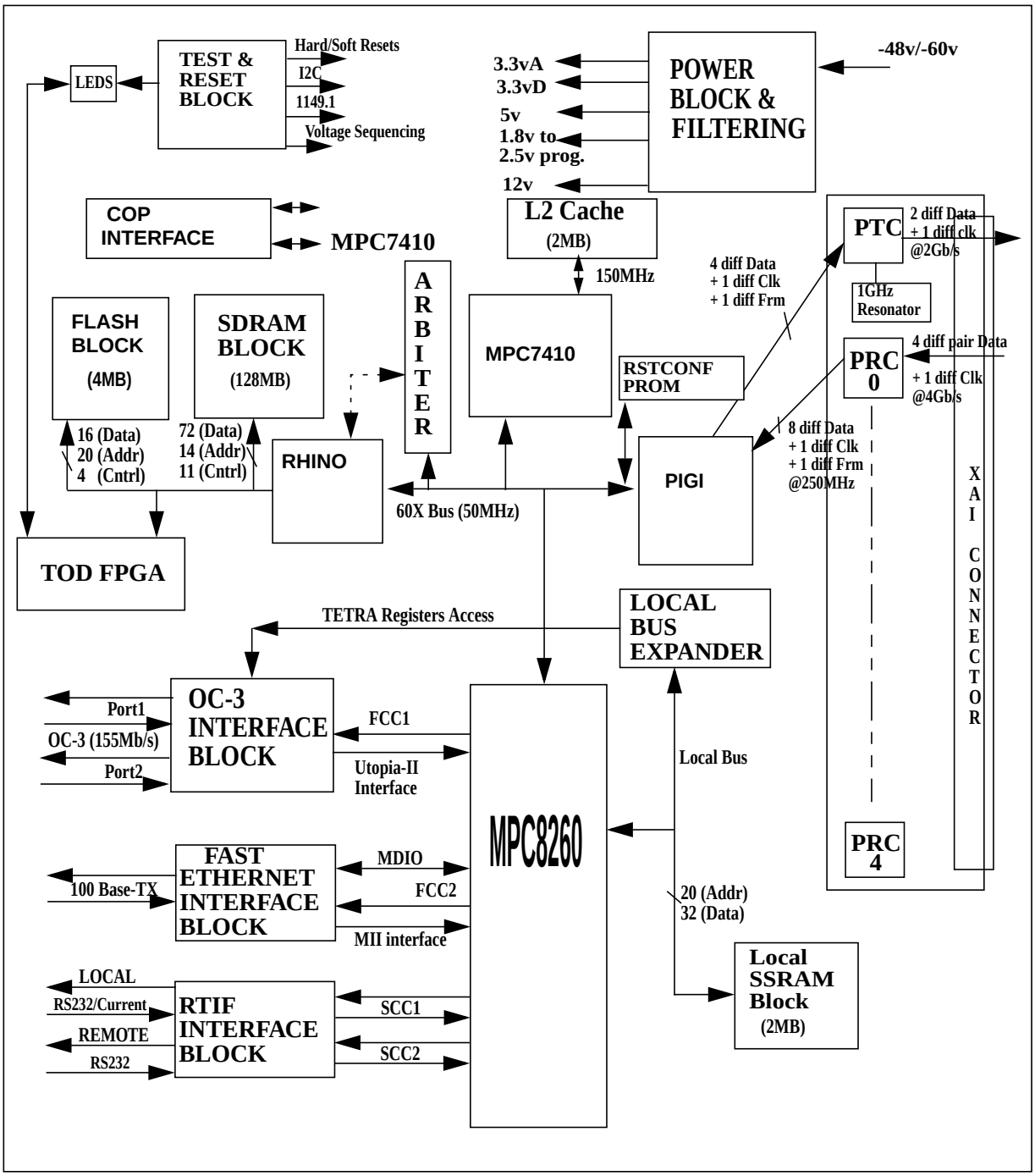

Technical data

This section describes the technical specifications for the NTLX17 high performance CMIC (HCMIC) circuit pack. The specifications include power requirements, pack status light emitting diodes (LEDs), technology, and equipment dimensions.

Power requirements

The power requirements for the HCMIC circuit pack appear in the following table.

Power Requirements

Parameter	Min.	Nom.	Max.
Supply voltage (Vdc)	-37	-48	-75
Supply current (Adc)	2.8	2.1	1.4

Status LEDs

There are five LEDs on the front of the circuit pack, one green, one red, and three amber.

The red and green LEDs are the common-equipment LEDs. They indicate the status of the circuit pack, as listed in the following table.

Pack Status LEDs

Green	Red	External Input Status
Off	Off	Unpowered, LED failure, or not inserted.
On	On	Powerup or card reset LED test and pack self-test.
On	Off	Pack should not be removed. It is in service.
Off	On	Alarm state. Pack may be removed.
Off	Wink	Pack is being indicated as faulty. Pack may be removed.

NTLX17 (end)

The amber LEDs are on the RTIF, ethernet, and OC-3 sections of the HCMIC. Each amber LED indicates link status, as listed in the following table.

Link Status LEDs

Amber	External Input Status
Off	All I/O interfaces that are currently provisioned appear to be receiving a valid signal.
On	The interface does not appear to be carrying a valid signal.

Technology

The components used in the NTLX17 are mainly surface-mount. Some through-hole devices are used. The XAI connector is press-fit on the board.Most of the components mounted on the secondary side of the circuit board are passive devices. Exceptions include some protection devices (transistors, diodes) with low power dissipation. The pack is a sixteen layer board employing FR4 material.

Equipment dimensions

The dimensions of the NTLX17 circuit pack are:

- overall height: 300mm (11.81 in.)
- overall depth: 280mm (11.02 in.)
- overall width: 48.7mm (1.92 in.)

NTLX20AA

Product description

The NTLX20AA XA-Core filler circuit (CP) regulates air flow from the cooling unit through the cabinet.

The features of the NTLX20AA filler CP are as follows:

- no midplane pin or power connections
- no internal circuits
- electro-magnetic interference (EMI) shielding
- installs in slot 1F of the XA-Core shelf

Location

The filler CP is in the first slot (front) of the XA-Core shelf.

Layout

The following figure shows the external appearance of the XA-Core filler CP.

NTLX20AA (continued)

NTLX20AA filler CP front and side views

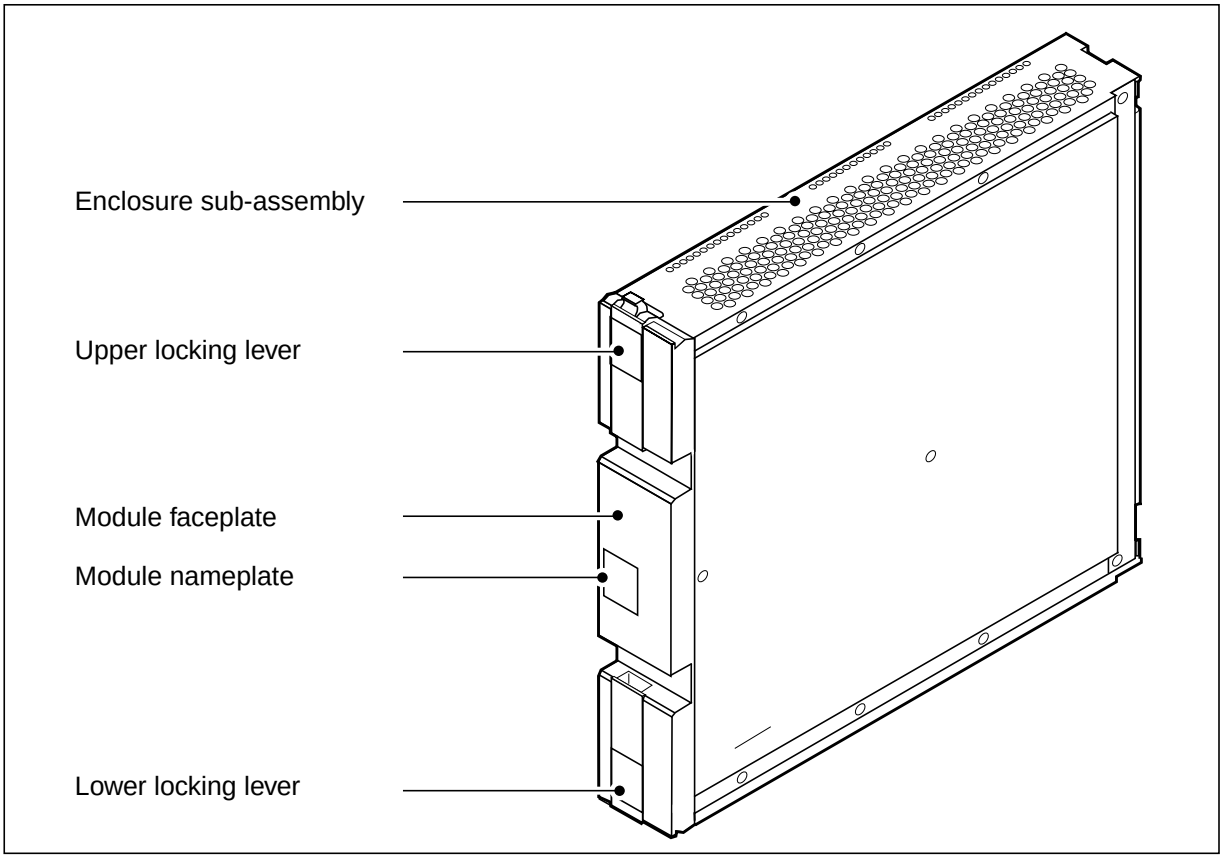

Functional description

The NTLX20AA XA-Core filler CP packaging is identical to the SM, PE, IOP and Termination CPs. The packaging provides for consistent air flow in the XA-Core shelf.

The filler CP provides EMI containment from the midplane.

Functional blocks

The filler CP contains no functional blocks.

Technical data

This section describes the technical specifications for the NTLX20AA XA-Core filler CP. The specifications include equipment dimensions.

NTLX20AA (end)

Equipment dimensions

The dimensions of the NTLX20AA XA-Core filler CP are:

- overall height: 300mm (11.81 in.)
- overall depth: 280mm (11.02 in.)
- overall width: 48.7mm (1.92 in.)

This page is left blank intentionally.

NTLX20BA

Product description

The NTLX20BA XA-Core terminating filler pack consists of a series of termination resistors which are used to terminate the XA-Core midplane transmit and receive paths present in an unused XA-Core shelf connector slot. The terminating filler pack is installed in an unused shelf connector slot in order to minimize the effects of noise and crosstalk on communication channels between the shared memory packs and the processing packs (processor element (PE) packs and input/output processor (IOP) packs). The terminating filler pack also helps to dissipate heat within the XA-Core shelf as well as providing the required electromagnetic interference (EMI) containment to the XA-Core shelf midplane.

The features of the NTLX20BA terminating filler pack are as follows:

- no power connection required
- passive circuits
- can install in any unused XA-Core shelf slot

Location

The terminating filler pack is installed in any slot in the XA-Core shelf not occupied by a processor element (PE) pack, a input/output processor (IOP) pack, or a shared memory (SM) pack.

Layout

The following figure shows the external appearance of the XA-Core terminating filler circuit pack.

NTLX20BA (continued)

NTLX20BA XA-Core slot terminating filler circuit pack

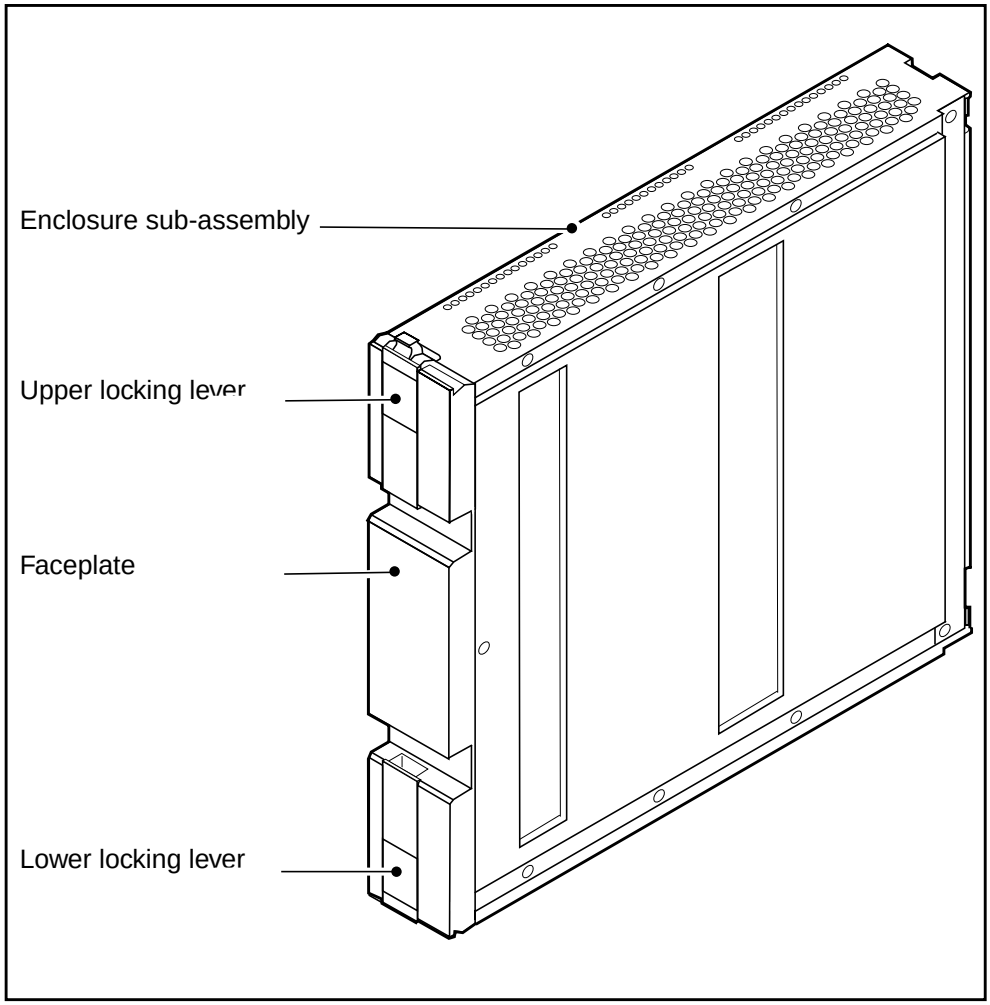

Functional description

The NTLX20BA XA-Core terminating filler pack has been designed to terminate all XA-Core midplane transmit and receive paths present at an unused XA-Core shelf connector slot. This is required in order to minimize any induced noise from the unused non contact electromagnetic couplers' transmit and receive paths. This is achieved by terminating each unused midplane transmit and receive path, through a termination resistor, to ground.

The packaging for the terminating filler pack is identical to that of the shared memory pack, the processor element pack and the input/output processor pack. Identical packaging is used to provide compatible air flow and thus balanced air flow across the entire XA-Core shelf with a termination filler pack installed in each unused shelf slot.

Installation of the terminating filler pack in each unused XA-Core shelf slot is also necessary in order to provide the required EMI containment to the midplane.

Functional blocks

The terminating filler pack consists of the following functional blocks:

- Midplane connector block
- Terminator block

The following figure shows the relationship between the functional blocks.

NTLX20BA functional blocks

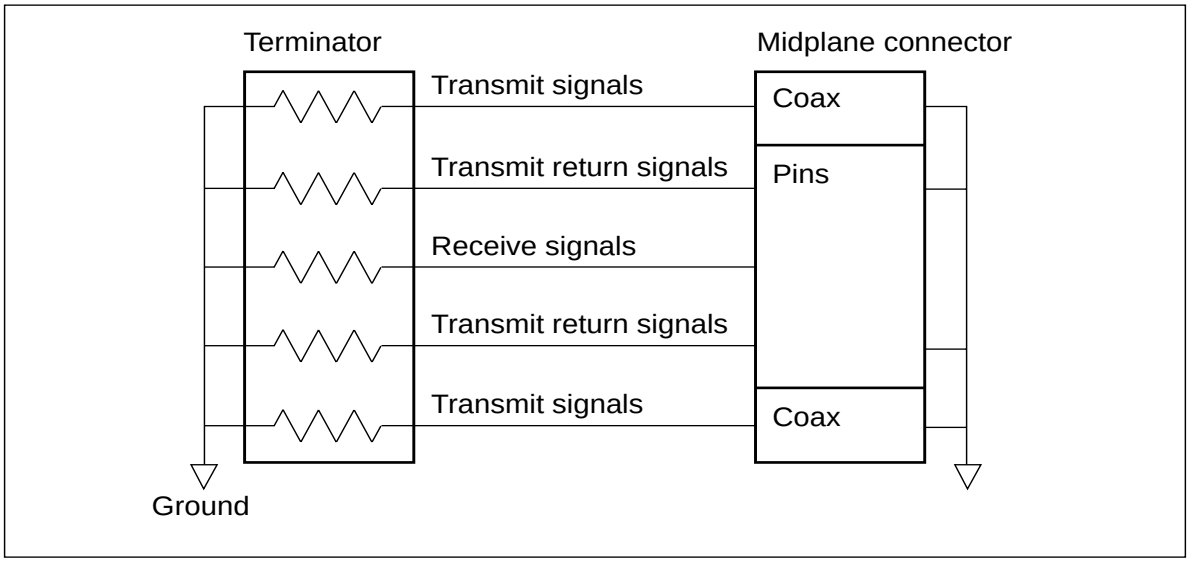

Midplane connector

The midplane connector is a press fit connector consisting of a pair of transmit coax connectors and a multi-pin receive connector assembly. Since the pack requires no power, there are no power connectors. All ground pins of the connector are grounded together.

Terminator

The terminator consists of a set of 49.9 ohm passive series termination resistors. Each transmit channel of each transmit coax connector is connected through a 49.9 ohm passive series termination resistor to ground. Each receive channel (pin) on the multi-pin receive connector is connected through a 49.9 ohm passive series termination resistor to ground.

NTLX20BA (end)

Technical data

This section describes the technical specifications for the NTLX20BA XA-Core terminating filler pack. The specifications include technology and equipment dimensions.

Technology

The NTLX20BA uses surface mount technology. All components are installed on the primary side. The pack is an eight layer printed circuit board employing epoxy-fiberglass (FR4) material.

Equipment dimensions

The dimensions of the NTLX20BA XA-Core terminating filler pack are:

- overall height: 300mm (11.81 in.)
- overall depth: 280mm (11.02 in.)
- overall width: 48.7mm (1.92 in.)

6 XA-Core data schema overview

Sources of information about the data schema

This chapter contains overview information on the data schema, and brief descriptions of certain data schema tables.

For more information on tables OFCENG, OFCOPT, OFSTD and OFCVAR, see the *Office Parameters Reference Manual*, 297-8001-855 (North American market) or 297-9051-855 (International market).

Note: As of the release of CSP16, the *Office Parameters Reference Manual* does not include the latest information on certain office parameters that are relevant to XA-Core. We have included that information in the sections of this chapter describing table OFCENG and table OFCSTD.

Data schema overview

The purpose of data schema is to assist the operating company in preparing office-dependent data for the relevant DMS switching unit.

The office-dependent data is stored in a series of data store lookup tables that are used in conjunction with software programs and circuits to advance each call through the various stages of call processing.

The data schema portion of the document provides functional descriptions of tables and their fields, including valid entries for each field. It does not provide translation information, call progression sequence, or complete feature implementation datafill.

Data schema is divided into modules, with each module describing one table. As new software features are added, or capabilities are enhanced, existing table documents are revised, or new tables are written.

Table descriptions

Table descriptions are arranged alphabetically according to short table name.

Data schema tables are described under the following headings:

Table name

This section gives the full table name from which the short table name printed on the page header is derived.

Overview

This optional section gives an overview of the system that the table controls.

Functional description

This section describes how the table is accessed and used by the system, as well as its relation with other tables, feature packages and features. If appropriate a description of how to add, delete or change tuples in the table is included. For some tables, flow charts and block diagrams are used to help illustrate the functional description.

Datafill sequence and implications

This section lists other tables that must be datafilled before or after the table being datafilled, as well as office parameters that interact with the table. If appropriate, any implication involving the datafill sequence is included.

Table size

This section gives the minimum and maximum number of tuples allowed in the table. If appropriate, information on memory allocation is also included. For more complicated tables, a formula for calculating the table size is included.

Field descriptions

Descriptions of the fields in the table are presented in table format. The first column is the short field name as it appears on the MAP terminal. The second column is the short subfield name as it appears on the terminal. The third column gives the range of possible entries in the field. The fourth column gives the expanded field name and describes the entries including any default values.

Terminology

Terms used in the field descriptions section are explained below.

Entry: An entry is an alphanumeric combination of characters for a field, a subfield, a refinement, or a vector. Entries are datafilled by Nortel Networks, by the operating company or by the DMS system. Tables that the operating company can access but cannot change are read-only or NT-only tables.

Field: A field is one column of a table. Each field has a name that describes the content of the field. For example, a field that contains directory numbers can be named field DN.

Key field: a key field is found in each table. Tables can have more than one key field. These fields uniquely identify any tuple in the table. Knowing the key fields of a table is important if using the table editor.

Range: The range of a field is the set of all possible data values that can be ER can have a range of 1 to 20. RANGE is also a table editor command that can be entered at the MAP terminal to determine the range of a field, subfield or refinement. The range is shown between curly brackets, {}. When a description of the range is shown instead of curly brackets, the datafill is a variable that depends on other datafill or is an alphanumeric entry to be chosen by the operating company. In the explanation of a range, the phrase “entries outside of the indicated range are invalid” means that values shown at the MAP terminal that are not described in the NTP are not to be used.

Subfield: A subfield is a division of a field. For example, the field named LEN often consists of subfields SITE, FRAME, UNIT, DRAWER and CIRCUIT.

Refinement: A refinement is a field that further modifies the field preceding it, depending on the datafill in the first field.

Table editor: The table editor is the user interface to the data schema database. It allows the user to view tables, add or delete tuples, and change data in tuples.

Tuple: A tuple is one row of data in a table. A row can be one field or a combination of fields up to all fields in the table. When adding or changing at least one entry of a tuple using table editor commands at a MAP terminal, confirmation of the new tuple is prompted.

Value: A value is synonymous with an entry.

Vector: A vector is a field that can contain more than one entry. Each entry is separated by a single space.

Datafill example

The datafill section contains an example of a MAP display of the datafilled table. Where appropriate, explanations are provided for the specific datafill in the example.

Table history

This section lists the PCL in which the table change, with a short description of the change. When a table becomes obsolete, the PCL or software layer is identified.

Supplementary information

This section contains information that is pertinent to the data schema table but does not logically belong under previous sections. For example, error messages, or dump and restore procedures are often found here.

This page is left blank intentionally.

XAMDILNK

Table name

AMDI link configuration table

Functional description

XAMDILNK table holds information about mapping between the AMDI logical link and its physical location. The table also contains a redundant group number that specifies a pair of AMDI links that are redundant to one another.

Table XAMDILNK also contains information about the AMDI link protocol configuration.

Datafill sequence and meaning

There is no requirement to enter datafill into other tables before table XAMDILNK.

There is no requirement to enter datafill into other tables after table XAMDILNK.

Table size

XAMDILNK (continued)

Datafill

The table that follows lists the datafill for table XAMDILNK.

Field descriptions (Sheet 1 of 2)

Field	Subfield	Entry	Explanation and action
LINKNO		0-7	A unique number identifying the AMDI link. This number is the key for datafilling connections on the link in TABLE ATMCONN.
GROUP		0-7	A unique number identifying the redundancy group that the link belongs to. AMDI links should be grouped in pairs to form redundancy groups. The links in a redundancy group back one another up. When no faults exist, the links in a group operate in load-sharing mode. The following recommendations apply to redundancy groups. At the XA-Core, the links in a redundancy group should be hosted by separate hardware components (separate packlets or separate HIOP circuit packs). At the ATM-network side, the links in a redundancy group should not terminate on the same edge device. Note that if you disregard the recommendations, the links can still work properly, but if a fault occurs, the system will have less than the optimal degree of redundancy and will be less able to adapt.
SLOT		see subfields	
	SLOT	0-18	The physical slot number on the XA-Core shelf. If the AMDI link is handled by an OC-3 AMDI packlet, this is the slot containing the IOP circuit pack that houses the packlet. If the AMDI link is handled by an HIOP circuit pack, this is the slot containing that circuit pack.
	SIDE	FRONT, REAR	The side of the XA-Core shelf where the IOP or HIOP resides.

XAMDILNK (continued)

Field descriptions (Sheet 2 of 2)

Field	Subfield	Entry	Explanation and action
PACKLET		UPPER, LOWER, NONE	If the AMDI link is handled by an OC-3 AMDI packlet, this is the location (UPPER or LOWER) of the packlet in the IOP circuit pack. If the AMDI link is handled by an HIOP circuit pack, the value is NONE.
PORTNO		0-1	The port number on the AMDI packlet or on the HIOP circuit pack where the link connects to the ATM network.
PROTOCOL		SONET/SDH	Identifies the protocol configuration of the AMDI links. SONET is the standard for North American markets and SDH is the standard for international markets.
LOOPBACK		16-character string	A user-defined 16-character string. Firmware uses the string to respond to I.610 and Passport VC Trace loopback requests originating from within the ATM network. Some systems supply a system-generated default value, which is composed of the interface type (for example, AMDI), followed by a two-digit slot number (for example, 05 or 14), followed by a one or two-character position code composed of R or F (rear or front) and, if the interface is a packlet, U or L (upper or lower), followed by the port number.

XAMDILNK (end)

Datafill examples

The following figure show sample datafill for table XAMDILNK.

MAP display example for table XAMDILNK if OC-3 AMDI packlets are used

LINKNO	GROUP	SLOT	PACKLET	PORT	PROTOCOL	LOOPBACK
0	0	5 REAR	LOWER	0	SONET	AMDI05RL0
1	0	14 REAR	LOWER	0	SONET	AMDI14RL0
3	1	13 REAR	LOWER	0	SONET	AMDI13RL0
4	1	6 REAR	LOWER	0	SONET	AMDI06RL0

MAP display example for table XAMDILNK if HIOP circuit packs are used

LINKNO	GROUP	SLOT	PACKLET	PORT	PROTOCOL	LOOPBACK
0	0	5 REAR	NONE	0	SONET	AMDI05R0
1	1	5 REAR	NONE	1	SONET	AMDI05R1
3	0	14 REAR	NONE	0	SONET	AMDI14R0
4	1	14 REAR	NONE	1	SONET	AMDI14R1

Table history

CSP12.7

Table XAMDILNK introduced in this release.

CSP18

The LOOPBACK field is added.

XACINV

Table name

Extended Architecture Inventory Table

Functional description

Datafill sequence and meaning

There is no requirement to enter datafill into other tables before table XACINV.

There is no requirement to enter datafill into other tables after table XACINV.

Table size

Datafill

The table that follows lists the datafill for table XACINV.

Field descriptions

Field	Subfield	Entry	Explanation and action
SLOT		see subfields	Slot. See subfields NUMBER and SIDE.
	NUMBER	1 to 18	Number. Enter the slot number for the appropriate circuit pack.
	SIDE	FRONT or REAR	Side. Enter the circuit pack side location.
FRU		see subfields	Field replaceable unit. See subfields CP and PEC.
	CP	PE, SM, IOP, or HIOP	Circuit pack. Enter the circuit pack type and see IOP refinements below.
	PEC	alphanumeric of up to 8 characters.	Product engineering code. Enter the circuit pack product engineering code for the entries in field CP.

XACINV (end)

If the entry in field CP = IOP

The table that follows lists the conditional datafill.

Field descriptions

Field	Subfield	Entry	Explanation and action
UPPER		see subfield	Upper. See refinements for subfield PACKLET.
	PACKLET	refinements of DISK, TAPE, RTIF, CMIC or NONE.	Packlet. Enter the upper circuit packlet type.
	PEC	alphanumeric of up to 8 characters.	Product engineering code. Enter the circuit pack product engineering code.
LOWER		see subfield	Lower. See refinements for subfield PACKLET.
	PACKLET	refinements of DISK, TAPE, RTIF, CMIC or NONE.	Packlet. Enter the upper circuit packlet type.
	PEC	alphanumeric of up to 8 characters.	Product engineering code. Enter the circuit pack product engineering code.

Datafill example

The figure that follows shows sample datafill for table XACINV.

MAP display example for table XACINV

```
SLOT          FRU
2 FRONT       IOP NTLX03BA TAPE NTLX07AA DISK NTLX06AA
4 FRONT       PE NTLX02AA
17 FRONT      IOP NTLX03BA TAPE NTLX07AA DISK NTLX05AA
7 REAR        SM NTLX14BA
```

Table history

CSP10.4

Table XACINV introduced in this release.

XAFWLOAD

Table name

XA-Core firmware load table

Functional description

The table XAFWLOAD stores the following information:

- firmware (FW) load file locations and names
- field replaceable unit (FRU) product equipment codes (PEC)
- FW soak times
- valid FW versions

The system uses table XAFWLOAD to control firmware versions and to detect a firmware version mismatch.

Datafill sequence and meaning

There is no requirement to enter datafill into other tables before table XAFWLOAD.

Table size

0 to 40 tuples.

XAFWLOAD (continued)

Datafill

The table that follows lists datafill for table XAFWLOAD.

Field descriptions

Field	Subfield	Entry	Explanation and action
FRU	none	PE, IOP, HIOP, CMIC, AMDI, or ETHR	Indicates the type of card or packlet.
PEC	none	alphanumeric (8 characters)	Indicates the product equipment code (PEC).
VERSION	none	alphanumeric (up to 8 characters)	Indicates the FW version.
VOLUME	none	alphanumeric (up to 20 characters)	Indicates the volume name.
FILE	none	alphanumeric (up to 32 characters)	Indicates the file name.
LOADTYPE	none	FW or DLL	FW indicates a firmware load that the user can download by using the loadfw command. DLL (downloadable loader) indicates a firmware load that the user cannot download by using the loadfw command. DLL firmware downloads automatically when the circuit pack restarts.
STATUS	none	new, current or old	The system uses the status entry to indicate which volume and filename to retrieve when executing the LoadFW command. All tuples have a unique combination of FRU, PEC and STATUS except when status = OLD.
SOAK	none	0 to 240	Indicates the time period in hours that the system soaks the firmware. The default entry is 48.

Datafill example

The figure that follows shows sample datafill for table XAFWLOAD.

MAP display example for table XAFWLOAD

```
INDEX FRU PEC    VERSION  VOLUME      FILE   LOADTYPE STATUS   SOAK

1  PE   NTLX02AA XAPE01AC F02LFWLOADS PEFW413  FW     old      48
2  PE   NTLX02AA XAPE01AF F02LFWLOADS PEFW421  FW     current  48
3  PE   NTLX02AA XAPE01BA F02LFWLOADS PEFW424  FW     new      48
4  IOP  NTLX03AA XAIO01AA F02LFWLOADS ISEFW41  FW     old      0
5  IOP  NTLX03AA XAIO01AC F02LFWLOADS ISEFW44  FW     current  0
6  CMIC NTLX05AA PK10CU10 F02LFWLOADS 0C3FW75  FW     current  72
7  HIOP NTLX04AA XHIO01YC F02LPMLOADS XHIO01YC FW     current  48
8  HIOP NTLX04AA XHIO01YD F02LPMLOADS XHIO01YD DLL    current  0
```

Table history

BAS14

Table XAFWLOAD is added in BAS14.

Additional information

Table XAFWLOAD does not use translation verification tools.

Do not delete the tuple that shows the volume as “unknown_volume_name” and the file as “unknown_file_name”. The system uses this tuple for version control.

This page is left blank intentionally.

FWINV

Table name

XA-Core firmware inventory table.

Functional description

Table FWINV lists the baseline firmware for all XA-Core circuit packs and packlets that take downloadable firmware. It also lists any firmware loads that have been specified as exceptions. An exception is a firmware load that is prohibited, despite the fact that it is at or above the listed baseline firmware load for the circuit pack or packlet.

If a downloadable component contains a firmware load that does not meet the baseline requirements as shown in table FWINV, the system raises a Baseln major alarm.

Datafill sequence and meaning

There is no requirement to enter datafill into other tables before table FWINV.

Table size

0 to 64 tuples.

FWINV (continued)

Datafill

The table that follows lists datafill for table FWINV.

Field descriptions

Field	Subfield	Entry	Explanation and action
PEC	none	8 characters, beginning NTLX	Key field. Product equipment code and suffix. Indicates the type of circuit pack or packlet.
FWBASE			One or two instances of subfields FWTYPE, VERSION, and EXCEPTION. There are two instances only for HIOP circuit packs (whose PECs begin NTLX04) because HIOP circuit packs take two types of downloadable firmware, FW firmware and DLL firmware.
FWTYPE	subfield of FWBASE	FW or DLL	All downloadable components take FW firmware loads. Only the HIOP circuit pack takes a DLL firmware load in addition to an FW load.
VERSION	subfield of FWBASE	alphanumeric (up to 8 characters)	Firmware version names. Version names begin as follows: for PE CPs, XAPE; for IOP CPs, XAIO; for HIOP CPs, XHIO; for HCMIC CPs, XREC; for CMIC packlets and AMDI packlets, PKnn, where n is a digit in the range 0 to 9; for ethernet packlets, EPnn, where n is a digit in the range 0 to 9.
EXCEPTIONS	subfield of FWBASE	vector of up to four version values	Versions specified as exceptions are prohibited, despite being at or above the baseline shown in the VERSION field. If the firmware load in a downloadable component is listed in this table as an exception, the system raises the Baseln major alarm.

Datafill example

The figure that follows shows sample datafill for table FWINV. For each downloadable component, the table lists an FW firmware load. For each of the versions of the HIOP circuit pack (NTLX04AA, BA, and CA), the table lists a DLL firmware load in addition to the FW load. The entry for the CMIC packlet, NTLX05AB, lists two exception versions. (The exception versions are fictitious, and are for illustration only.)

MAP display example for table XAFWLOAD

```
PEC      FWBASE

NTLX02CA (FW XAPE01AG $) $
NTLX02DA (FW XAPE02AB $) $
NTLX03AA (FW XAIO01AK $) $
NTLX03AB (FW XAIO01AK $) $
NTLX03BA (FW XAIO01AK $) $
NTLX03BB (FW XAIO01AK $) $
NTLX04AA (FW XHIO02AA $) (DLL XHIO03AC $) $
NTLX04BA (FW XHIO02AA $) (DLL XHIO03AC $) $
NTLX04CA (FW XHIO02AH $) (DLL XHIO03AC $) $
NTLX05AB (FW PK12CE12 (PK88CE88) (PK99CE99) $) $
NTLX05BA (FW PK12CE12 $) $
NTLX09AA (FW EP14D003 $) $
NTLX17AA (FW XREC01CH $) $
```

Table history

CSP20

Table FWINV is added in CSP20.

Additional information

Table FWINV is user modifiable. If you modify the table, exercise caution. If you modify the table so that the firmware that is currently in a downloadable component is incompatible with the baseline information or incompatible with the exception-list information, the system will raise a Baseln major alarm, and the item, if taken out of service, will subsequently fail to RTS.

Table FWINV is not restored over a one night process (ONP).

This page is left blank intentionally.

PECINV

Table name

Product engineering code inventory table.

Functional description

Table PECINV lists the baseline hardware for the components of the XA-Core shelf.

> ***Note:*** Only some of the tuples in table PECINV refer to XA-Core components. Tuples that refer to XA-Core components contain the value “XACHW”, as in the following example:
> `NTLX02CA (XACHW 01 $) $`

Where to find information about table PECINV

For information about table PECINV, see

- the description of table PECINV in the *Customer Data Schema Reference Manual*, 297-nnnn-351
- the sections titled "Changes to table PECINV in CSP20" and "Additional information", immediately below

Changes to table PECINV in CSP20

In CSP20, the maximum number of tuples in table PECINV is increased to 256, and the default datafill is updated.

Additional information

Table PECINV is user modifiable. If you modify the table, exercise caution. If you modify the table so a circuit pack or packlet that is currently installed in the XA-Core shelf is incompatible with the baseline information or incompatible with the exception-list information, the system will raise a Baseln major alarm. If the circuit pack or packlet subsequently goes out of service, you will be able to return it to service (RTS) only after you have corrected table PECINV. Also, if you delete the tuple that lists the baseline information for a hardware item, and if that item subsequently goes out of service, you will be able to return it to service (RTS) only after you have added a tuple for that item to table PECINV.

Table PECINV is not restored over a one night process (ONP).

This page is left blank intentionally.

XASHELF

Table name

Extended Architecture Shelf Table

Functional description

The extended architecture shelf provides location information for the DMS-100 XA-Core. This table is used to specify the physical location of the XA-Core shelf and the frame.

Datafill sequence and meaning

Table NNASST must be datafilled prior to table XASHELF.

Table MSINV must be datafilled after table XASHELF.

Table size

Table size for this table is fixed and cannot change.

Maximum size = 1 tuple

Minimum size = 1 tuple

Datafill

The following table lists the datafill for table XASHELF.

Field descriptions (Sheet 1 of 2)

Field	Subfield	Entry	Explanation and action
XASHELFK		see subfield	Extended Architecture Shelf Key. See subfield SHELF.
	SHELF	0 to 0	Shelf. Enter the numeric value of the position of the XA-Core shelf relative to the other shelves in the frame. The default value is 0.
FLOOR		0 to 99	Floor. Enter the numeric value of the floor position of which the frame containing the XA-Core shelf is located. The default value is 1.
ROW		A to Z, AA to ZZ excluding O, I, OO, II	Row. Enter the numeric value of the row position on the floor where the frame housing the XA-Core shelf is located.

XASHELF (end)

Field descriptions (Sheet 2 of 2)

Field	Subfield	Entry	Explanation and action
FRAMEPOS		0 to 47	Frame position. Enter the numeric value of the frame containing the XA-Core shelf. The default value is A.
FRTYPE		alphanumeric (up to 4 characters)	Frame type. Enter the frametype that contains XA-Core shelf. The default value is DPCC.
FRAMENO		0 to 511	Frame number. Enter the frame number where the shelf is located. The default value is 0.
SHELFHT		0 to 77	Shelf Height. Enter the shelf position height. The default value is 0.

Datafill example

The figure that follows shows sample datafill for table XASHELF.

MAP display example for table XASHELF

```
SHELF  FLOOR  ROW  FRAMEPOS  FRTYPE  FRAMENO  SHELFPOS

 0      1     A    0         DPCC    0        0
```

Table history

CSP10.4

Table XASHELF introduced in this release.

OFCENG

Description

Table OFCENG contains office parameters. Office parameters are initially set by Nortel Networks to meet end-of-design criteria and switch configuration.

For information on the office parameters in table OFCENG, see the *Office Parameters Reference Manual*, 297-8001-855 (North American market) or 297-9051-855 (International market), and see the information on the following pages.

XA-Core related office parameters

This edition of the *XA-Core Reference Manual* contains information about selected office parameters. We have included information about XA-Core related parameters that have been added in recent releases. We have also included corrected information for certain parameters because the *Office Parameters Reference Manual* will not be re-issued in CSP16.

The following table lists the office parameters from table OFCENG that covered on the following pages, and the reasons for their inclusion in this document

(Sheet 1 of 2)

Parameter	Reason for inclusion
CAP_MAX_DURATION	Added in CSP14
GUARANTEED_TERMINAL_CPU_SHARE	Modified for CSP15, for CSP20
IO_WARNING_THRESHOLD	Added in CSP20
NCCBS	Corrected information
NUMCPWAKE	Corrected information
NUMPERMEXT	Modified for CSP16
ORIGTHRES	Modified for CSP16
PASSWORD_SECURITY	Added in CSP16
RATED_POWER	Added in CSP14; modified in CSP20
SNTP_CLIENT	Added in CSP16

OFCENG (continued)

(Sheet 2 of 2)

Parameter	Reason for inclusion
XA_COMPONENT_INSTALL_STATE	Added in CSP14
XA_IO_STATE_CHANGE_ALARM_THRESH	Added in CSP17; deleted in CSP19

CAP_MAX_DURATION

This office parameter specifies a value in minutes. It is a timer value that serves the following purposes:

- It specifies the maximum time period during which capacity data will be accumulated. The accumulation of capacity data begins when a user enters the Detail MAP level, which is a sublevel of the Capacity MAP level. Data accumulation ends when the user exits the Detail level, or when the timer expires. (For information on the Capacity MAP level and its sublevels, see the chapter titled "Capacity-monitoring tools in an XA-Core" in this document.)
- It specifies the time period after which the system will automatically stop the execution of capacity logs. The capacity logs begin executing when a user enters the StrtLog command. The capacity logs stop executing when the user enters the StopLog command, or when the timer expires. (For information on the StrtLog and StopLog commands, the chapter titled "Capacity-monitoring tools in an XA-Core" in this document.)

Provisioning rules

None

Range information

The range information is as follows:

Minimum	Maximum	Default
16	510	255

Activation

Immediate.

Requirements

None.

Results

Increasing the value will lengthen the time span during which capacity data is accumulated; decreasing the value will shorten the time span.

Testing

To verify that the parameter is set correctly, enter the following command at the CI prompt:

>STRTLOG BRIEF

This command ensures that capacity log reports generate during the interval indicated by the CAP_MAX_DURATION office parameter.

Memory requirements

None.

Dump and restore rules

None.

Parameter history

This parameter is added in CSP14.

GUARANTEED_TERMINAL_CPU_SHARE

This office parameter specifies the amount of processing time that is guaranteed to be available for use by priority terminals. The amount of processing time is expressed as a percentage of the processing time of one PE circuit pack. The office parameter has an integer value, where the integer represents the percentage value. For example, if the office parameter is set to 1, that means 1%.

During an initial program load (IPL), the system sets the value of this parameter to the default value. Therefore, if you want a value other than the default value, you must use the table editor to set the value following the IPL.

Provisioning rules

For most switches the recommended value is 1%.

For switches that require high-priority terminal use during busy hours, the recommended value is 2% for each datafilled priority terminal.

> ***Note:*** For XA-Core switches running CSP14 only, it is recommended that the parameter value should not exceed 8%.

For switches that are used as stand-alone signal transfer points (STP), and that do not contain call-processing software, the recommended value is 10%.

OFCENG (continued)

Range information

The range information is as follows:

Minimum	Maximum	Default
1	16	1

Activation

Immediate.

Requirements

None.

Results

Increasing the value of this office parameter will cause a decrease in call processing capacity. In XA-Core in CSP14, the capacity impact is 1% for each unit by which you increase the parameter value. In XA-Core beyond CSP14, calculate the impact as follows. For every unit by which you increase the value of the office parameter, the capacity impact is 1% divided by (n-1), where n is the number of in-service PE circuit packs.

Memory requirements

This parameter does not impact memory.

Dump and restore rules

Copy the current value of the parameter when you perform a dump and restore.

Parameter history

This parameter was introduced in BCS21. It was updated in CSP15 to reflect modifications introduced by XA-Core. In CSP20 it was updated so that it is no longer reset to the default following a reload restart or following an MTCSWACT reload.

IO_WARNING_THRESHOLD

This office parameter specifies an IO utilization threshold in terms of a percentage. The system calculates the utilization percentage of CMIC, ETHR, and AMDI IO service types. It does these calculations for each minute. Each time the utilization percentage for a service type exceeds the value of this office parameter, the system pegs the IOTHRESH register for that service type.

OFCENG (continued)

The IOTHRESH peg registers for the CMIC, ETHR, and AMDI service types are in the IOCAP OM group.

> ***Note:*** The utilization calculations apply only to IO capacity provided by HIOP circuit packs (NTLX04) and by HCMIC circuit packs (NTLX17). The calculations do not apply to IO capacity provided by packlets.

Provisioning rules

There is no formula for provisioning this office parameter. The customer should set it in such a way that it will provide advance warning that the IO configuration is under stress. Thus the customer will know when it is time to upgrade the IO configuration.

Range information

The range information is as follows:

Minimum	Maximum	Default
1	100	100

Activation

Immediate.

Requirements

None.

Results

If the office parameter is set too low, the IOTHRESH register in the IOCAP OM group might be pegged frequently, indicating that the customer should upgrade the IO configuration when in fact such an upgrade is not needed. If this office parameter is set too low, then the IOTHRESH register in the IOCAP OM group will not give the customer advance warning that the IO configuration needs to be upgraded.

Memory requirements

This parameter does not impact memory.

Parameter history

This parameter was introduced in CSP20.

OFCENG (continued)

NCCBS

This section contains corrected range information for the NCCBS (number of call condense blocks) office parameter.

Range information

The following table shows the range information for this parameter on XA-Core.

Minimum	Maximum	Default
0	262142	80

History

In CSP14 the maximum value of the NCCBS office parameter for XA-Core was increased to 262142 (that is, 256K-1).

NUMCPWAKE

This section contains corrected range information for the NUMCPWAKE (number of call processing wakeups) office parameter.

Range information

The following table shows the range information for this parameter on XA-Core.

Minimum	Maximum	Default
0	65535	2000

History

In CSP13 the maximum value of the NUMCPWAKE office parameter for XA-Core was set at 65535 (that is, 64K).

In CSP15 the default value of the NUMCPWAKE office parameter for XA-Core was set at 2000.

NUMPERMEXT

For XA-Core, the upper limit of the NUMPERMEXT (number of permanent extension blocks) office parameter has been increased in CSP16.

Range information

The following table shows the range information for this parameter on XA-Core.

Minimum	Maximum	Default
0	262143	1

Dependencies

The value of office parameter NCCBS has a direct impact on this parameter. For XA-Core, the upper limit of NUMPERMEXT is set to a value that is one greater than the upper limit for NCCBS.

History

In CSP14 the maximum value of the NUMPERMEXT office parameter was set at 65535 (that is, 64K). (Previously, the value was32767.)

In CSP16 the maximum value of the NUMPERMEXT office parameter for XA-Core was set at 262143.

ORIGTHRES

The ORIGTHRES office parameter specifies the number of CPLETTERS that the system reserves for existing calls. If the number of available CPLETTERS drops below the value specified by ORIGTHRES, the system begins to deny origination to new calls in order to ensure that there are enough CPLETTERS for existing calls.

The total number of CPLETTERS

- is 5000 in release CSP16
- is 6500 in releases CSP17 and CSP18

OFCENG (continued)

History

The history of the ORIGTHRES office parameter is as follows.

- In CSP16 the default value of ORIGTHRES was changed from 2992 to 2500.
- In CSP17 the default value of ORIGTHRES was changed
  - — to 4000 for a system equipped with NTLX02CA PE circuit packs
  - — to 3000 for a system equipped with NTLX02DA PE circuit packs

PASSWORD_SECURITY

This office parameter enables the user to disable password protection. It works in conjunction with the parameter ENHANCED_PASSWORD_CONTROL in table OFCOPT. ENHANCED_PASSWORD_CONTROL imposes password protection, and users cannot edit that parameter. If password protection is in effect, a user can disable the password protection by setting PASSWORD_SECURIY to N. Only admin can change the value of PASSWORD_SECURITY. If ENHANCED_PASSWORD SECURITY has the value N, then there is no password protection, regardless of the setting of PASSWORD_SECURITY.

Range information

The range information is as follows:

Minimum	Maximum	Default
N	Y	Y

Parameter history

This parameter is added in CSP16.

RATED_POWER

This office parameter defines the amount of processing power, excluding spare PEs. Processing power is expressed in terms of PE units. For example, if the XA-Core shelf has the 3+1 PE-card configuration, the RATED_POWER parameter should be set to 3.

OFCENG (continued)

Range information
The range information is as follows:

Minimum	Maximum	Default
1	9	3

Activation
Immediate.

Requirements
None.

Results
Increasing the value will increase the rated capacity; decreasing the value will decrease the rated capacity.

> ***Note:*** The RATED_POWER value should accurately reflect the PE-card configuration of the XA-Core shelf. This will ensure that the capacity-monitoring tools and the PE-related alarms will provide accurate information. The RATED_POWER value is used to determine alarm severities when PEs fail. It is also used in a calculation that determines the ENGCATMP value that is reported by the capacity-monitoring tools. (For information on the capacity-monitoring tools, see the chapter titled "Capacity-monitoring tools in an XA-Core" in this document.)

Testing
Insert a new component. Verify the state of the new component at the MAP.

Memory requirements
No memory impact.

Dump and restore rules
None.

Parameter history
This parameter is added in CSP14.

In CSP20 the minimum changes from 3 to 1 and the maximum changes from 7 to 9.

OFCENG (continued)

SNTP_CLIENT

This office parameter determines whether the XA-Core uses Network Time Protocol (NTP) as the time reference for the time-of-day clock. The NTP reference is available only in Germany. If the parameter is set to Y, then the NTP is used as the time reference.

Range information

The range information is as follows:

Minimum	Maximum	Default
N	Y	N

Activation

Immediate. A restart is not required to activate the functionality.

Requirements

None.

Results

When the value of the parameter is changed, a warning message is issued.

Testing

To test the setting of the parameter, enter the following command at the CI MAP level:

NTPCI

If the SNTP_CLIENT office parameter is set to N, the system responds by displaying a message stating that the feature is not available. If the parameter is set to Y, the system displays the following prompt: NTPCI>

To exit from the NTPCI level, enter the following command at the NTPCI prompt:

QUIT

Memory requirements

None.

Dump and restore rules

None.

Parameter history
This parameter is added in CSP16.

XA_COMPONENT_INSTALL_STATE
This office parameter gives the operating company the option to specify the initial state that provisioned components will be in when they are first installed. The operating-company personnel sets this parameter to inservice or to manbusy. Thereafter, when components are installed in the shelf, the components will go into the specified state.

Range information
The range information is as follows:

Minimum	Maximum	Default
inservice	manbusy	inservice

Activation
Immediate.

Requirements
None.

Results
Set the value of the parameter to manbusy, to set the component's state to manbusy upon insertion.

Set the value of the parameter to inservice, to have the system recover the component to an inservice state upon insertion.

Testing
Insert a new component. Verify the state of the new component at the MAP.

Memory requirements
No memory impact.

Dump and restore rules
None.

Parameter history
This parameter is added in BASE14.

OFCENG (end)

XA_IO_STATE_CHANGE_ALARM_THRESH

This office parameter existed only in CSP17 and CSP18.

In CSP17 and CSP18, this office parameter controlled whether the IOHits minor alarm was activated or deactivated. The system raised the alarm when it detected that an IO component was frequently transitioning from the in-service state to the out-of-service state. The office parameter also controlled the threshold value, that is, the transition count at which the system raised the alarm.

As of CSP19, separate thresholds apply to PE circuit packs, SM circuit packs, IO hardware, and IO links, and the threshold values are set by Nortel Networks. The system displays the threshold values as part of its response to the CNTRS QUERY command. For detailed information on the display of threshold values, see the description of the QUERY parameter of the CNTRS command in the XAC MAP level. The description is found in the chapter titled "XA-Core MAP levels and user interfaces" in this document.

Also as of CSP19, the IOHits alarm was deleted. As of CSP19, if components transition too frequently from the in-service state to the system-busy state (SysB), the system raises the SysBTh minor alarm or the SysBTh major alarm. For descriptions of the SysBTh alarms, see the *XA-Core Maintenance Manual*, 297-8991-510.

Parameter history

This parameter was added in CSP17 and was deleted as of CSP19.

OFCSTD

Description

Table OFCSTD contains office parameters. Office parameters are initially set by Nortel Networks to meet end-of-design criteria and switch configuration.

For information on the office parameters in table OFCSTD, see the *Office Parameters Reference Manual*, 297-8001-855 (North American market) or 297-9051-855 (International market), and see the information on the following pages.

XA-Core related office parameters

This edition of the *XA-Core Reference Manual* contains information about selected office parameters. We have included information about XA-Core related parameters that have been added in recent releases. We have also included corrected information for certain parameters because the *Office Parameters Reference Manual* will not be re-issued in CSP16.

In this section we have included corrected information about the CPSTACKSIZE parameter in table OFCSTD.

CPSTACKSIZE

This section contains corrected range information for the CPSTACKSIZE (call processing stacksize) office parameter.

Range information

The following table shows the range information for this parameter on XA-Core.

Minimum	Maximum	Default
4096	16368	

History

In CSP14 the minimum value of the CPSTACKSIZE office parameter for XA-Core was set at 4096. (Previously it was 1504.)

This page is left blank intentionally.

CMIPADDR

Table name

Computing module internet protocol address table.

Functional description

Table CMIPADDR lists internet-protocol (IP) address information that is used in conjunction with the hardware in the XA-Core shelf that supports the ethernet links. The hardware may be ethernet packlets, or HIOP circuit packs, or HCMIC circuit packs, or a combination of HIOP and HCMIC circuit packs.

The following IP addresses are listed in table CMIPADDR.

- ACTIVEIP. XA-Core internet connectivity requires exactly two active IP addresses. The active IP addresses are the only IP addresses advertised outside of the XA-Core. If an IP-based application needs the IP address of the XA-Core, the XA-Core provides an active IP address to the application. Active IP addresses float, which means that each one can be bound onto any one of the hardware components (ethernet packlets, HIOP circuit packs, or HCMIC circuit packs) supporting ethernet links. If an active IP address is bound onto a hardware component that suffers a failure, then the address will be re-bound onto a healthy component. Under fault scenarios, both active IP addresses may be bound to a single remaining viable ethernet link.
- CARDIP. The card IP address of the packlet or circuit pack that supports the ethernet link. This address is used only within the packlet or circuit pack.
- MTCIP. The maintenance IP address of the packlet or circuit pack that supports the ethernet link. The core uses this address to perform maintenance on the packlet or circuit pack.
- EDGEIP. The IP address of the edge device to which the ethernet link is connected. (The edge device can be a router, a switch, or other device.) The XA-Core uses this IP address to perform integrity checks between the ethernet interfaces and edge devices
- GTWYIP. This is the IP address of a gateway connecting to the LAN, on which the edge device resides, with other networks.

CMIPADDR (continued)

In table CMIPADDR, each tuple begins with one of the following values: CMHOST, ETHRLNK, or GATEWAY. A CMHOST tuple specifies an ACTIVEIP. An ETHERLNK tuple specifies the CARDIP, MTCIP, and EDGEIP for a specific ethernet link. A GATEWAY tuple specifies a GTWYIP. The following figure shows sample datafill for an XA-Core provisioned with four ethernet links.

IP addresses listed in table CMIPADDR

Exactly one gateway is required.

Ethernet-link-specific information.

Exactly two active IP addresses are required.

```
KEY       DATA
----------------------------------------------------------------------
CMHOST 0  HOST (10 40 14 108) 24 0
CMHOST 1  HOST (10 40 14 109) 24 0
ETHRLNK 0 ETHR 5  REAR NONE (10 40 14 100) 24 (10 40 14 101) 24 (10 40 14 1) 0
ETHRLNK 1 ETHR 6  REAR NONE (10 40 14 102) 24 (10 40 14 103) 24 (10 40 14 2) 0
ETHRLNK 2 ETHR 13 REAR NONE (10 40 14 104) 24 (10 40 14 105) 24 (10 40 14 3) 0
ETHRLNK 3 ETHR 14 REAR NONE (10 40 14 106) 24 (10 40 14 107) 24 (10 40 14 4) 0
GATEWAY 0 GW (10 40 14 130) 0
```

Datafill sequence and meaning

There is no requirement to enter datafill into other tables before table CMIPADDR.

Table size

0 to 10 tuples.

Datafill

The table that follows lists datafill for table CMIPADDR.

Field descriptions (Sheet 1 of 3)

Field	Subfield	Entry	Explanation and action
KEY			
KEY	KEYCLASS	CMHOST or ETHRLNK or GATEWAY	Specifies the type of tuple. CMHOST indicates that the tuple specifies an ACTIVEIP. ETHRLNK indicates that the tuple specifies the CARDIP, MTCIP, and EDGEIP for a specific ethernet link. GATEWAY indicates that the tuple specifies a GTWYIP.
KEY	ENTRYNO	Integer in the range 0 to 7	If KEYCLASS is CMHOST, the legal values are 0 and 1. If KEYCLASS is ETHRLNK, the legal values are 0, 1, 2, 3, 4, 5, 6, and 7. If KEYCLASS is GATEWAY, the only legal value is 0.
DATA			
DATA	SELCLASS	HOST or ETHR or GW	If KEYCLASS is CMHOST, the value must be HOST. If KEYCLASS is ETHRLNK, the value must be ETHR. If KEYCLASS is GATEWAY, the value must be GW.
DATA	ACTIVEIP		Refinement if SELCLASS is HOST. The value is an active IP address, in the format nnn nnn nnn nnn where each instance of nnn is an integer in the range 0 to 255.
DATA	NETMASK	Integer in the range 1 to 30	Refinement if SELCLASS is HOST. The value indicates the number of leading 1's in the netmask.
DATA	NETID	0	Refinement if SELCLASS is HOST. The value must be 0. This field is for future use.

CMIPADDR (continued)

Field descriptions (Sheet 2 of 3)

Field	Subfield	Entry	Explanation and action
DATA	SLOT		Refinement if SELCLASS is ETHR. The value indicates the slot in the XA-Core shelf occupied by the hardware handling the ethernet link.
DATA	LOCATION	FRONT or REAR	Refinement if SELCLASS is ETHR. The value indicates the side of the XA-Core shelf on which is found the hardware handling the ethernet link.
DATA	PACKLET	UPPER or LOWER or NONE	Refinement if SELCLASS is ETHR. The value indicates the location in the slot of the hardware handling the CMIP link. If the hardware is an ethernet packlet (NTLX09), specify UPPER or LOWER. If the hardware is an HIOP circuit pack (NTLX04) or an HCMIC circuit pack (NTLX17), specify NONE.
DATA	CARDIP		Refinement if SELCLASS is ETHR. The value is a card IP address, in the format nnn nnn nnn nnn where each instance of nnn is an integer in the range 0 to 255.
DATA	CARDNETM	Integer in the range 1 to 30	Refinement if SELCLASS is ETHR. The value indicates the number of leading 1's in the netmask.
DATA	MTCIP		Refinement if SELCLASS is ETHR. The value is a maintenance IP address, in the format nnn nnn nnn nnn where each instance of nnn is an integer in the range 0 to 255.
DATA	MTCNETM	Integer in the range 1 to 30	Refinement if SELCLASS is ETHR. The value indicates the number of leading 1's in the netmask.
DATA	EDGEIP		Refinement if SELCLASS is ETHR. The value is an edge IP address, in the format nnn nnn nnn nnn where each instance of nnn is an integer in the range 0 to 255.

CMIPADDR (end)

Field descriptions (Sheet 3 of 3)

Field	Subfield	Entry	Explanation and action
DATA	NETID	0	Refinement if SELCLASS is ETHR. The value must be 0. This field is for future use.
DATA	GTWYIP		Refinement if SELCLASS is GW. The value is the IP address of the gateway, in the format nnn nnn nnn nnn where each instance of nnn is an integer in the range 0 to 255.
DATA	NETID	0	Refinement if SELCLASS is GW. The value must be 0. This field is for future use.

Datafill example

The figure that follows shows sample datafill for table CMIPADDR.

MAP display example for table CMIPADDR

```
KEY       DATA
----------------------------------------------------------------------
CMHOST 0  HOST (10 40 14 108) 24 0
CMHOST 1  HOST (10 40 14 109) 24 0
ETHRLNK 0 ETHR 5  REAR NONE (10 40 14 100) 24 (10 40 14 101) 24 (10 40 14 1) 0
ETHRLNK 1 ETHR 6  REAR NONE (10 40 14 102) 24 (10 40 14 103) 24 (10 40 14 2) 0
ETHRLNK 2 ETHR 13 REAR NONE (10 40 14 104) 24 (10 40 14 105) 24 (10 40 14 3) 0
ETHRLNK 3 ETHR 14 REAR NONE (10 40 14 106) 24 (10 40 14 107) 24 (10 40 14 4) 0
GATEWAY 0 GW (10 40 14 130) 0
```

Table history

CSP15

Table CMIPADDR was introduced in CSP15.

This page is left blank intentionally.

LOGTHROT

Table name

Log-throttling table.

Functional description

In table LOGTHROT you can enter specifications for limiting the number of log messages that the system sends to all log devices (devices that print or display the messages). You can also choose to limit the log messages sent to disk (Disk Log).

You can specify throttling for logs generated in the XA-Core. This includes more logs than those described in this manual. (This manual contains description of logs that pertain to the functioning of the XA-Core and its components.) For information on the log groups, see *DMS-100 Log Report Reference Manual*, 297-8021-840 (North American market) or 297-9051-840 (International market).

You can specify throttling against a specific log, for example, TRK113. Alternatively, you can specify throttling against a log-report group, for example, TRK. You specify a reporting interval, such as five minutes and a threshold, such as 100.

For each log specification in the table, the system counts the number of log messages generated within each reporting interval. If, during a reporting interval, the number of log messages reaches the specified threshold value, the system applies throttling. That means that during the rest of the reporting interval, there are additional log messages that satisfy the specification, the system will not send those additional messages to the log devices, and it will not send them to Disk Log if you have specified that log throttling for the specified logs should extend to Disk Log.

At the end of each reporting period, the system resets the log counters to zero. If log throttling was applied during the reporting interval, the system cancels that throttling and resumes sending log messages to their destinations.

LOGTHROT (continued)

Example

For example, suppose we want to throttle the TRK113 log. We want to print and display a maximum of five TRK113 log messages per minute. We also want to apply throttling to Disk Log, so that the system will send no more than five TRK113 messages per minute to Disk Log. In table LOGTHROT, we enter specifications as shown in the following figure.

MAP display example for table LOGTHROT

```
REPNAME   THRSHOLD   TUNITS   DLOG
-----------------------------------
TRK113    5          1        Y
```

Datafill sequence and meaning

There is no requirement to enter datafill into other tables before table LOGTHROT.

The system will not allow you to add a tuple to table LOGTHROT if the REPNAME value (For example, TRK113) is already used in table LOGCLASS. For more information, see "Additional information" in this section.

Table size

0 to 512 tuples.

Datafill

The table that follows lists datafill for table LOGTHROT.

Field descriptions

Field	Subfield	Entry	Explanation and action
REPNAME		See subfields	Identifies a specific log report or a log group.
LOGNAME	LOGNAME	Up to four alphabetic characters	The name of the log group, for example, TRK. You can specify throttling against logs generated in the XA-Core. For a list of log-group names, see the *DMS-100 Log Report Reference Manual*, 297-8021-840 (North American market or 297-9051-840 (International market).
REPNAME	REPNUM	Integer in the range 000 to 999 or -1	The identification number of the log report. An entry in the range 000 to 999 identifies a specific log report. An entry of -1 indicates all log reports in the log group, that is, all log reports in the range TRK000 to TRK999.
THRSHOLD		Integer in the range 0 to 255	The maximum number of log messages satisfying the specifications in the REPNAME field that the system will print or display during a reporting interval. (The duration of the reporting interval is specified in the TUNITS field.) An entry in the range 1 to 255 means that during a single reporting interval, the system will print or display that many of the specified log messages, and that if additional such logs messages occur during the reporting interval, the system will not print or display those additional log messages. An entry of 0 means that all such log messages will be printed and displayed.
TUNITS		Integer in the range -32768 to 32767	The duration of the reporting interval, in minutes. (The recommended value is 1.) At the expiry of the interval, the counter resets to zero, and throttling, if in effect, is removed. A value in the range -32768 to 0 means there is no interval, and throttling will not occur for the specified log message or log group. The table allows a maximum of 100 unique TUNITS values.
DLOG		Y or N	Y means that log-throttling applies to Disk Log, that is, if, during a reporting interval, the system applies throttling to log messages as specified in the REPNAME field, and if additional such log messages occur during the reporting interval, the system will not send those additional log messages to Disk Log. N means that log-throttling does not apply to Disk Log.

LOGTHROT (end)

Datafill example

The figure that follows shows sample datafill for table LOGTHROT.

MAP display example for table LOGTHROT

```
REPNAME   THRSHOLD   TUNITS   DLOG
-----------------------------------
TRK113    5          1        Y

XACP-1    100        60       N
```

The datafill shown in the example means the following:

- The first tuple refers to the TRK113 log. The system will send no more than five instances per minute to the log devices. Throttling extends to Disk Log, so the system will send no more than five instances per minute to Disk Log.
- The second tuple refers to the XACP log group. (The REPNUM value of -1 means “all log reports in this log group”.) The system will send no more than 100 XACP log messages per hour to log devices. The throttling does not extend to Disk Log, so the system will send all XACP log messages to Disk Log.

Table history

CSP21

Table LOGTHROT was introduced in CSP21.

Additional information

For a given REPNAME value, there cannot be simultaneous entries in tables LOGTHROT and LOGCLASS. For example, if table LOGCLASS contains a tuple with the REPNAME value TRK113, then the system will not allow you to add to table LOGTHROT a tuple containing the REPNAME value TRK113. Similarly, if table LOGTHROT contains a tuple with the REPNAME value TRK113, then the system will not allow you to add to table LOGCLASS a tuple containing the REPNAME value TRK113. If you try to make a prohibited entry, the system issues a message asking you to remove the conflicting entry from the other table.

Note: For information on table LOGCLASS, see the *Customer Data Schema Reference Manual*, 297-8021-351 (North American market) or 297-9051-351 (International market).

7 Capacity-monitoring tools in an XA-Core

Overview

The capacity-monitoring tools for an XA-Core are based on the CPSTATUS/CPSTAT and ACTIVITY monitoring tools used by the DMS SuperNode to monitor CM capacity.

The Capacity MAP and CAPCI interface have replaced CPSTATUS/CPSTAT and ACTIVITY. The Capacity MAP level supports the SchedMAP MAP sub-level and the Detail MAP sub-level. In addition, the Capacity MAP level supports the IOCAP MAP sub-level, which monitors the usage of the CMIC, ETHR, and AMDI IO service types on HIOP and HCMIC circuit packs (but not on packlets).

Figure 7-1 Capacity MAP hierarchy

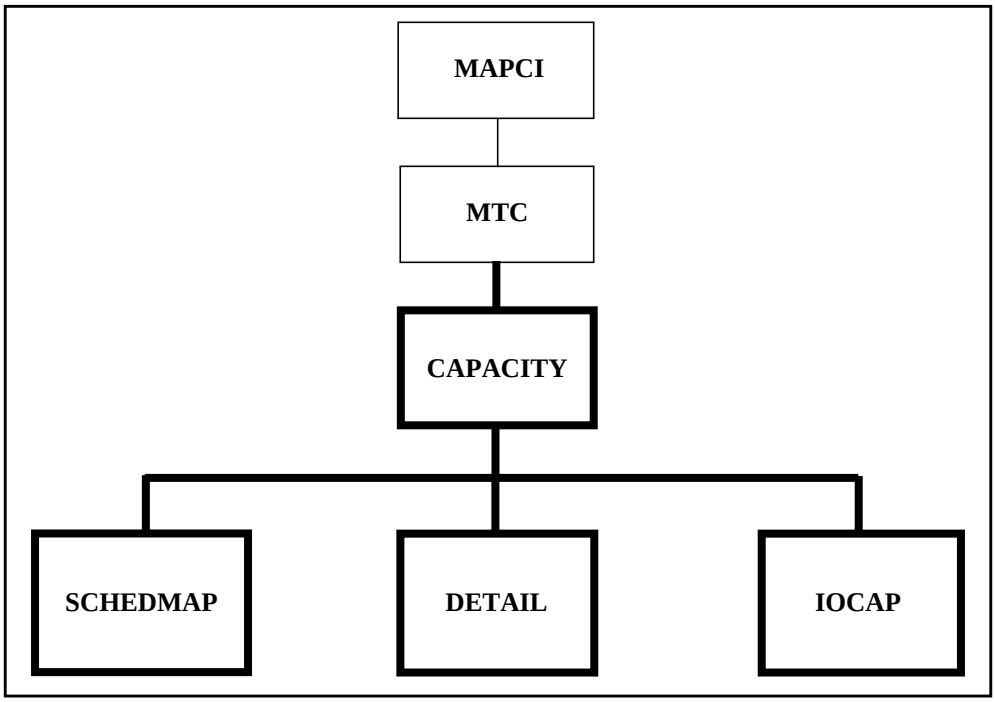

Subsequent sections of this chapter contain detailed information on the Capacity, SchedMAP, Detail, and IOCAP MAP levels.

The capacity-monitoring tools introduce a set of logs to provide capacity information for future analysis, as well as an operational measurement (OM) group to measure central processing unit (CPU) usage on an XA-Core. New office parameters CAP_MAX_DURATION and RATED_POWER have also been added.

The following table contains an overview of the capacity measurements provided in an XA-Core.

Note: Statistics from the IOCAP MAP level are located at the end of the table.

Table 7-1 Overview of capacity measurements in an XA-Core (Sheet 1 of 4)

		New for XA-Core		
Measurement	**UNIT**	**Y**	**N**	**Description**
CATMP/HR	Number		X	Call attempts per hour.
UTIL	Percent		X	Current call attempts as a percentage of Engineered Call Attempts.
ENGCATMP	Number		X	Projected engineered call attempts per hour at which all grade of service specifications are met. This value is based on the Rated Power of the office, and does not take the processing power of the spare PE into account.
MAXCATMP	Number	X		Projected maximum call attempts per hour at which all grade of service specifications are met. This value includes all PEs, including those provisioned for reliability.
ENGLEVEL	ABOVE/ BELOW		X	Current utilization is above or below office parm CC_ENGLEVEL_WARNING_THRESHOLD. This parm has a default value of 100.
CCOVRLD	ON/OFF		X	Status of Central Control Overload controls in the last minute.
CMICOVRLD	ON/OFF		X	Status of CMIC Overload control in the last minute.
PESC	YES/NO	X		PE State Change indicator. ‘YES’ indicates a PE state change occurred during the last minute.
SCHED	Percent		X	Observed scheduler overhead utilization relative to the expected overhead occupancy at capacity (Expected occupancy or OCCexp = 8%).

Table 7-1 Overview of capacity measurements in an XA-Core (Sheet 2 of 4)

Measurement	UNIT	New for XA-Core Y	New for XA-Core N	Description
FORE	Percent		X	Observed operating system utilization relative to the expected occupancy at capacity. Foreground includes SYSTEMCLASS, SYSTOOLCLASS, INITCLASS.
MAINT	Percent		X	Observed MAINTCLASS utilization relative to the expected occupancy at capacity.
DNC	Percent		X	Observed NOSFTCLASS utilization relative to the expected occupancy allocated at capacity. DNC includes NOSFT class.
AUXCP	Percent		X	Observed AUXCPCLASS utilization relative to the expected occupancy at capacity. This value can be altered via the office parm AUXCP_CPU_SHARE.
OM	Percent		X	Observed OM utilization relative to the expected occupancy at capacity. OM includes GOMCLASS and NGOMCLASS.
GTERM	Percent		X	Observed GTERMCLASS utilization relative to the expected occupancy at capacity. This value can be altered via the office parm GUARANTEED_TERMINAL_CPU_SHARE.
BKG	Percent		X	Observed background classes utilization relative to the expected occupancy at capacity. Background includes BKGCLASS and AUDITCLASS.
NETM	Percent		X	Observed NETMTCCLASS utilization relative to the expected occupancy allocated at capacity.
SNIP	Percent		X	Observed SNIPCLASS utilization relative to the expected occupancy at capacity.
OAvgDel	Number		X	Weighted average waiting time on the CCB originating queue.
95%OLim	Number		X	This represents the 95% high water mark for the CCB originating queue.
PAvgDel	Number		X	Weighted average waiting time on the CCB progress queue.
95%PLim	Number		X	This represents the 95% high water mark for the CCB progress queue.
BAvgDel	Number		X	Weighted average waiting time on the Background (BKGCLASS) ready queue.

Table 7-1 Overview of capacity measurements in an XA-Core (Sheet 3 of 4)

		New for XA-Core		
Measurement	**UNIT**	**Y**	**N**	**Description**
95%BLim	Number		X	This represents the 95% high water mark for the Background ready queue.
MAvgDel	Number	X		Weighted average waiting time on the Maintenance (MAINTCLASS) ready queue.
95%MLim	Number	X		This represents the 95% high water mark for the Maintenance ready queue.
OrigDeny	Number		X	OM field in OM group CP. Origination denial counts the number of originations that are ignored because they were not serviced within 3s of arrival.
InefDeny	Number		X	OM field in OM group CP2. Ineffective Deny counts the origination/abandon pairs that are ignored because they were not serviced within 0.5s from the time the origination arrived.
LCMdtsr	Percent		X	LCM dial tone speed recording.
LMdtsr	Percent		X	LM dial tone speed recording.
XASUTIL	Percent		X	Current Payload Utilization. Provides average over transfer period (%).
XASPUTIL	Percent	X		Provides Peak Payload Utilization value over the transfer period (%).
XASSCHED	Percent		X	Scheduler Overhead percent utilization.
XASFORE	Percent		X	Foreground percent utilization.
XASMAINT	Percent		X	Maintenance Class percent utilization.
XASDNC	Percent		X	NOSFT Class percent utilization.
XASOM	Percent		X	OM percent utilization.
XASGTERM	Percent		X	GTerm Class percent utilization.
XASBKG	Percent		X	Background percent utilization.
XASAUXCP	Percent		X	AUXCP Class percent utilization.
XASNETM	Percent		X	NETM Class percent utilization.
XASSNIP	Percent		X	SNIP Class percent utilization.
XASPESC	Number	X		Number of one minute intervals in the transfer period during which a PE state change occurred.

Table 7-1 Overview of capacity measurements in an XA-Core (Sheet 4 of 4)

Measurement	UNIT	New for XA-Core Y	New for XA-Core N	Description
XASNXFR	Number	X		Number of transfer periods accumulated in this OM report. If there is one transfer period accumulated in this report, this OM will output 1.
XASOVER	Number	X		Number of one minute intervals in the transfer period during which system utilization was greater than 100%.
XASOTHLD	Number	X		Number of one minute intervals in the transfer period during which system utilization exceeded the CC_ENGLEVEL_WARNING_THRESHOLD.
IOCAP measurements				
IOUTIL	Percent	X		The average utilization of a service type. Separate utilization percentages for the CMIC, ETHR, and AMDI service types are calculated every minute.
RXMSG/S	Number	X		The average number of received messages per second during the preceding minute. Separate values for the CMIC, ETHR, and AMDI service types are calculated every minute, and the field values are updated every minute.
RXSIZE	Number	X		The average size, in bytes, of an incoming message during the preceding minute. Separate values for the CMIC, ETHR, and AMDI service types are calculated every minute, and the field values are updated every minute.
TXMSG/S	Number	X		The average number of outgoing messages per second during the preceding minute. Separate values for the CMIC, ETHR, and AMDI service types are calculated every minute, and the field values are updated every minute.
TXSIZE	Number	X		The average size, in bytes, of an outgoing message during the preceding minute. Separate values for the CMIC, ETHR, and AMDI service types are calculated every minute, and the field values are updated every minute.

Related operational measurements

Capacity measurements are found in OM group XASTAT and in OM group IOCAP. Active operational measurements are updated once every minute.

The XASTAT OM group measures central processing unit (CPU) usage and call processing on an XA-Core. Also use OM group XASTAT to provision an XA-Core.

The IOCAP OM group provides information on IO capacity such as utilization and throughput information. The OM group provides the information for each IO service type supported on the switch. Possible service types are CMIC, ETHR, and AMDI. The information provided by the OM group refers only to IO capacity provided by HIOP circuit packs (NTLX04) and by HCMIC circuit packs (NTLX17). It does not refer to IO capacity provided by packlets.

For detailed information on OM group XASTAT and OM group IOCAP, see the chapter titled “XA-Core operational measurements” in this document.

Related logs

The capacity logs are, CAP100, CAP101, CAP102 and CAP103. These logs report capacity information for future analysis by the user. The system sends one line of output to the log buffer every minute while the logs are active. This contains measurements from the previous minute. Logs are provided every 15 minutes, as well as a summary log for the numerical data recorded at the Capacity MAP level over the 15 minute sample period.

For detailed information on the capacity logs, see the chapter titled “Understanding XA-Core log reports” in this document.

Related office parameters

Office parameters CAP_MAX_DURATION and RATED_POWER are related to capacity monitoring. Office parameter IO_WARNING_THRESHOLD is related to IO capacity monitoring.

For information on these office parameters, see the chapter titled “XA-Core data schema overview” in this document.

Capacity MAP level

Introduction

The Capacity MAP levels provide the user with information necessary to manage XA-Core capacity. Select the CAPACITY option from the MTC MAP level to access the Capacity MAP level.

The Capacity MAP level provides high level information on office capacity. Measurements update every minute. The SCHEDMAP, DETAIL, and IOCAP sub-levels provide the user with more detail on XA-Core capacity.

Capacity MAP level layout

The following figure shows the layout of the Capacity MAP level.

Capacity MAP level

```
 XACM      MS     IOD     Net      PM     CCS     Lns    Trks    Ext     APPL
  .         .       .       .       .       .       .       .       .       .

CAPACITY
 0 Quit     CATMP/HR  UTIL  ENGCATMP  MAXCATMP ENGLEVEL CCOVRLD IOOVRLD PESC
 2 Parms      120000    75    160000    200000    BELOW     OFF     OFF NO
 3 SchedMap
 4 Detail
 5 IOCAP
 6
 7
 8
 9
10
11
12
13
14
15
16
17 StrtLog
18 StopLog
 XMAP0
Time  14:12   >
```

Note: The CAPCI command provides an alternative means of obtaining the information that is available at this MAP level. For information on the syntax of the CAPCI command, enter the following command on a MAP screen: HELP CAPCI.

CAPACITY MAP field definitions

The following section describes the information presented in CAPACITY MAP level to the user.

Capacity MAP level (continued)

Note: When multiple PEs are out of service, the information displayed in the following fields is incorrect and invalid: UTIL, ENGCATMP, MAXCATMP, and ENGLEVEL.

CATMP/HR

This field defines the current call attempts per hour.

The call attempts data is obtained from registers in the OFZ and OTS Operational measurement (OM) groups. The table titled "OM registers used to determine Call Rate" provides additional information on the specific registers used from these OM groups.

OM registers used to determine Call Rate

OM Field	OM Group	Description
NIN	OFZ	Number of incoming calls.
NIN2	OFZ	Extension register for NIN.
NORIG	OFZ	Number of originating calls.
NORIG2	OFZ	Extension register for NORIG.
NINC	OTS	Number of incoming call attempts.
NINC2	OTS	Extension register for NINC.
NORG	OTS	Number of originating call attempts.
NORG2	OTS	Extension register for NORG.

Note: OMs OCINI, OCCMS and RONATT are used in TOPS offices.

UTIL

This field defines the current utilization of the call processing capacity.

Call processing capacity utilization reports in a manner similar to BRISC. However the XA-Core performance curve is non-linear. This non-linearity is a result of the parallel processing nature of XA-Core. CPU time is necessary to ensure the integrity of shared data. This time is not constant and is a function of the current call rate, call mix, and the amount of non-payload work performed. It is included in the calculation of utilization.

Calculate utilization as a ratio of the current call processing activity to the projected engineered call processing activity for the current call mix. ENGCATMP defines the engineered call rate.

$$\text{Utilization} = \frac{\text{CATMP/HR X 100}}{\text{ENGCATMP}}$$

For example, if ENGCATMP is projected to be 1,000,000 calls/hour and the current call rate is 600,000 calls/hour, the utilization is reported as 60%.

The capacity prediction algorithm needs a sufficient traffic level (15% utilization or more) to report accurate results. Reporting of utilization of 15% or less can vary ranging from a dash ('-'), ('0%'), or an actual value between 1-15% depending on products. Such utilization values should be considered inaccurate.

Utilization is based on a mathematical prediction and thus is subject to error (+/-10%). Utilization can vary from minute to minute, even with a constant call rate, depending on many factors, including the amount of non-payload work and multiprocessing overheads. The utilization prediction should fall within +/-10%, even in the event of a single fault (for example, if the spare PE fails). The prediction will be outside of the range in the event of a double fault (for example, if two PEs fail).

Please note that each product's design team has the ability to customize the capacity prediction algorithm. As a result, the behavior and/or accuracy of the UTIL field may be different from what is described here.

> ***Note:*** When multiple PEs are out of service, the information displayed in the UTIL field is incorrect and invalid.

ENGCATMP

The engineered call attempts per hour field indicates the projected engineered calls per hour for the current call mix at capacity.

The engineered call capacity is based on the rated power of the office. The spare processing power is not included in the calculation. Since most offices will normally be provisioned with one spare PE, a single PE fault will not have an affect on ENGCATMP. If a PE failure reduces the available processing power to a value less than the rated power of the office, then the ENGCATMP value will decrease. The ENGCATMP value will then be based on the processing power currently provided by all in-service PEs.

The value of ENGCATMP also changes according to the current call mix and the CPUtime guaranteed to non-CallP scheduler classes. Feature rich calls require more CPUtime. As the call mix becomes more complex, the ENGCATMP value decreases. Increasing the office parameter settings for AUXCP_CPU_SHARE or GUARANTEED_TERMINAL_CPU_SHARE

Capacity MAP level (continued)

decreases the amount of time available to do call processing work. This lowers the value of ENGCATMP. Changing the allocated percentages for SNIP, NOSFT, or other engineerable classes also affects the value of ENGCATMP.

Utilization has an inverse relation to ENGCATMP, and therefore any decrease in the engineered call attempts value leads to an increase in utilization. The capacity prediction algorithm needs a sufficient traffic level (15% utilization or more) to report accurate results. Reporting of utilization of 15% or less can vary ranging from a dash ('-'), ('0%'), or an actual value between 1-15% depending on products. Such utilization values should be considered inaccurate.

ENGCATMP is based on a mathematical prediction and thus is subject to error (+/-10%). ENGCATMP can vary from minute to minute, even with a constant call rate, depending on many factors, including the amount of non-payload work and multiprocessing overheads. The ENGCATMP prediction should fall within +/-10%, even in the event of a single fault (for example, if the spare PE fails). The prediction will be outside of the range in the event of a double fault (for example, if two PEs fail).

Please note that each product's design team has the ability to customize the capacity prediction algorithm. As a result, the behavior and/or accuracy of the ENGCATMP field may be different from what is described here.

> ***Note:*** When multiple PEs are out of service, the information displayed in the ENGCATMP field is incorrect and invalid.

MAXCATMP

This field indicates the maximum call attempts per hour for the current call mix at capacity, including all in-service and spare PEs.

The delta between MAXCATMP and ENGCATMP (when all PEs are in-service) provides an indication of the call capacity of the spare PEs.

Unlike ENGCATMP, MAXCATMP changes when the spare PE fails and will report a value similar to ENGCATMP. MAXCATMP is similar to ENGCATMP in that it is affected by call mix and CPUtime used by non-CallP scheduler classes.

The capacity prediction algorithm needs a sufficient traffic level (15% utilization or more) to report accurate results. Reporting of utilization of 15% or less can vary ranging from a dash ('-'), ('0%'), or an actual value between 1-15% depending on products. Such utilization values should be considered inaccurate.

Capacity MAP level (continued)

Please note that each product's design team has the ability to customize the capacity prediction algorithm. As a result, the behavior and/or accuracy of the MAXCATMP field may be different from what is described here.

> ***Note:*** When multiple PEs are out of service, the information displayed in the MAXCATMP field is incorrect and invalid.

ENGLEVEL

This field reports ABOVE if the current utilization is greater than, or BELOW if the current utilization is less than the office parameter CC_ENGLEVEL_WARNING_THRESHOLD. This parameter has a default value of 100.

> ***Note:*** When multiple PEs are out of service, the information displayed in the ENGLEVEL field is incorrect and invalid.

CCOVRLD

The call processing overload field reports ON or OFF depending on the state of the call processing overload controls in the previous minute.

IOOVRLD

The IO overload field reports the state of the IO overload control in the previous minute. The system monitors the usage of CMIC and ethernet messaging. When the messaging rate exceeds a threshold, the system activates overload control. When activated, the overload control causes the system to reject new call originations. The system deactivates overload control when the messaging rate declines to a rate that does not exceed the threshold.

Possible values for the field are OFF, CMIC, ETHR, and CMIC-ETHR.

- OFF. This means that during the previous minute the system did not apply overload control.
- CMIC. This means that during the previous minute, the CMIC messaging rate was above the CMIC messaging threshold and the system activated CMIC overload control.
- ETHR. This means that during the previous minute, the ethernet messaging rate was above the ethernet messaging threshold and the system activated ethernet overload control
- CMIC-ETHR. This means that during the previous minute, the CMIC messaging rate was above the CMIC messaging threshold and the ethernet messaging rate was above the ethernet messaging threshold, and the system activated both CMIC overload control and ethernet overload control.

Capacity MAP level (continued)

PESC

The processor element state change indicator field reports YES if a PE state change occurred during the last minute. Otherwise, the PESC field reports NO.

Capacity menu commands

Menu commands appear on the MAP command menu. Non-menu commands do not appear on the MAP menu list. Enter both menu and non-menu commands in the command interpreter input area.

The following table contains a summary description Capacity MAP level commands.

Summary of Capacity MAP commands

Command	Menu #	Type	Function
Detail	4	Nav	Display the Detail MAP sub-level.
IOCAP	5	Nav	Display the IOCAP MAP sub-level.
Parms	2	Info	Display the current settings for office parameters and other engineerable settings.
Quit	0	Nav	Exit from the MAP level and display the MTC MAP level.
SchedMap	3	Nav	Display the SchedMap sub-level.
StopLog	17	Op	Stops a log of Capacity MAP information.
StrtLog	18	Op	Starts a log of Capacity MAP information.

Detail

The Detail command is a menu command. The Detail command instructs the XA-Core system to display the Detail MAP level.

Menu selection number

4

Type

Navigational

Parameters

There are no command parameters.

Options
There are no command options.

Command format examples
Example use of the Detail command is shown in the table titled "DETAIL command example". The command syntax is shown in the example below:

DETAIL

DETAIL command example

Command example	Command description
>DETAIL	Exit from the current MAP level and display the DETAIL MAP level

IOCAP
The IOCAP command is a menu command. The IOCAP command instructs the XA-Core system to display the IOCAP MAP level.

Menu selection number
5

Type
Navigational

Parameters
There are no command parameters.

Options
There are no command options.

Command format examples
Example use of the IOCAP command is shown in the table titled "IOCAP command example". The command syntax is shown in the example below:

IOCAP

IOCAP command example

Command example	Command Description
>IOCAP	Exit from the current MAP level and display the IOCAP MAP level

Capacity MAP level (continued)

Parms

The Parms command displays the current setting for office parameters and other engineerable settings that affect call processing capacity. The following information displays:

GUARANTEED_TERMINAL_CPU_SHARE: Displays the current setting for this office parameter in table OFCENG. This value determines the expected occupancy for GTERM at capacity and determines the ratio shown in the GTERM field on the SchedMAP sub-level.

> ***Note:*** On XA-Core the office-parameter value does not translate directly into GTERM occupancy. The office parameter represents the processing capacity that has been allocated for GTERM. The capacity is expressed as a percentage. It is a percentage of the processing capacity of a single PE circuit pack of the type that is currently equipped in the XA-Core. The allocated capacity is distributed across the PE circuit packs in the XA-Core because they work in load-sharing mode.

AUXCP_CPU_SHARE: Displays the current setting for this office parameter in table OFCENG. This value determines the expected occupancy for AUXCP at capacity and determines the ratio shown in the AUXCP field on the SchedMAP sub-level.

CC_ENGLEVEL_WARNING_THRESHOLD: Displays the current setting for this office parameter in table OFCENG (default value of 100). This value triggers the display for the ENGLEVEL field at the Capacity MAP level and uses the value ABOVE or BELOW.

NETM Share setting: Time allocated to NETMTC class. This value determines the expected occupancy for NETM at capacity and determines the ratio shown in the NETM field on the SchedMAP sub-level.

DNC Share setting: Time allocated to NOSFT class. This value determines the expected occupancy for NOSFT at capacity and determines the ratio shown in the DNC field on the SchedMAP sub-level.

SNIP Share setting: Time allocated to SNIP class. This value determines the expected occupancy for SNIP at capacity and determines the ratio shown in the SNIP field on the SchedMAP sub-level.

1% CPU Allocation: Relates the drop or increase in the engineered call attempts per hour expected based on a one percent change in the total CPU time guaranteed to a non-callp scheduler class.

Capacity MAP level (continued)

Note: The 1% CPU Allocation measurement is no longer supported in XA-Core. Given the multiprocessing nature of XA-Core, this type of measurement is no longer meaningful. Unlike BRISC, capacity is no longer directly proportional to the size of the payload scheduler classes. Changes to the payload scheduler classes can introduce more or less multiprocessing overhead, which cannot be predicted.

Menu selection number
2

Type
Informational

Parameters
There are no command parameters.

Options
There are no command options.

Command format examples
Example use of the Parms command is shown in the table titled "PARMS command example". The command syntax is shown in the example below:

PARMS

PARMS command example

Command example	Command description
>PARMS	Provides information on the current setting of office parameters and other engineerable settings.

Quit

The Quit command is a common menu command. The Quit command instructs the XA-Core system to exit from the current MAP session. You can exit to any MAP level that is higher in the MAP level hierarchy.

Note: The XA-Core system continues to execute any previous commands entered.

Menu selection number
0

Type
Navigational

Capacity MAP level (continued)

Parameters
The Quit command parameters are optional.

All
Use the <all> parameter to terminate all XA-Core MAP sessions and display the CI prompt.

Incrname
Use the <incrname> parameter to end the current MAP session and display a MAP level higher in the MAP system hierarchy. Enter a MAP level name. The XA-Core system displays the MAP level that is one level higher in the MAP system hierarchy than the <incrname> (increment name) value.

Nlevel
Use the <nlevel> parameter to end the current MAP session and display a MAP level higher in the MAP system hierarchy. Enter a number value to represent the number of DMS MAP levels to step back in the MAP system hierarchy.

Options
There are no command options.

Command format examples
Example use of the Quit command is shown in the table titled "QUIT command examples". The command syntax is shown in the example below:

QUIT <nlevel | incrname | all>

QUIT command examples

Command example	Command description
>QUIT	Use the Quit command with no parameters to exit from the current MAP session. Display a MAP level that is one level above the current MAP session level.
>QUIT mtc	QUIT <incrname>: Exit the current MAP session. Display the MAP level that is one level above the indicated MAP level name.
>QUIT 2	QUIT <nlevel>: Exit the current MAP session. Display the MAP level that is two levels above the current MAP session in the MAP hierarchy.
>QUIT all	QUIT <all>: Exit from all MAP sessions and display the CI prompt.

Capacity MAP level (continued)

SchedMAP

The SchedMAP command is a menu command. The SchedMAP command instructs the XA-Core system to display the SChedMAP MAP level.

Menu selection number

3

Type

Navigational

Parameters

There are no command parameters.

Options

There are no command options.

Command format examples

Example use of the SchedMAP command is shown in the table titled "SCHEDMAP command example". The command syntax is shown in the example below:

SCHEDMAP

SCHEDMAP command example

Command example	Command description
>SCHEDMAP	Exit from the current MAP level and display the SchedMAP MAP level.

StopLog

The StopLog command is a menu command. The StopLog command instructs the log system to begin a log of Capacity MAP information.

> ***Note:*** The StopLog command will stop all capacity logs, not just those started by the user who entered the command.

Menu selection number

17

Type

Operational

Capacity MAP level (continued)

Parameters

The StopLog command requires command parameters. If the user does not enter any parameters or enters invalid parameters, the MAP terminal displays an error message. The MAP terminal prompts the user to enter a correct parameter value.

All

Stops all logs.

Capacity

Stops CAP100, CAP101, and CAP102 logs.

Detail

Stops CAP103 logs.

SchedMAP

Stops CAP100, CAP101, and CAP102 logs.

Options

There are no command options

Command format examples

Example use of the StopLog command is shown in the table titled "STOPLOG command examples". The command syntax is shown in the example below:

STOPLOG <all | capacity | detail | schedmap>

STOPLOG command examples

Command example	Command description
>STOPLOG all	Stop all capacity logs currently running.
>STOPLOG capacity	Stop CAP100, CAP101 and CAP102 logs.
>STOPLOG detail	Stop CAP103 logs.
>STOPLOG schedmap	Stop Cap100, CAP101 and CAP102 logs.

StrtLog

The StrtLog command is a menu command. The StrtLog command instructs the log system to begin a log of Capacity MAP information.

Note: The CAP103 log uses additional CPU time. The user will receive a warning message when starting this log.

Capacity MAP level (continued)

Menu selection number
18

Type
Operational

Parameters
The StrtLog command requires command parameters. If the user does not enter any parameters or enters invalid parameters, the MAP terminal displays an error message. The MAP terminal prompts the user to enter a correct parameter value.

All
Starts all logs.

Brief
Starts all logs except CAP103.

Capacity
Starts CAP100, CAP101, and CAP102 logs.

Detail
Starts CAP103 logs.

Duration
An integer value that specifies how long (in minutes) the log should be left running. The lowest duration value that you can specify is 16. The highest duration value that you can specify is determined by the value of the CAP_MAX_DURATION office parameter. CAP_MAX_DURATION can be set to any integer value in the range 16 to 510. The default value is 255. (For information on CAP_MAX_DURATION, see the chapter titled "XA-Core data schema overview" in this document.)

Forever
If this parameter is entered, logs will continue to run until the StopLog command is entered.

SchedMAP
Starts CAP100, CAP101 and CAP102 logs.

Options
There are no command options.

Capacity MAP level (end)

Command format examples

Example use of the StrtLog command is shown in the table titled "STRTLOG command examples". The command syntax is shown in the example below:

STRTLOG <type> [<duration>]

<type> is one of the following: all, brief, capacity, detail, schedmap;
<duration> is either the word forever, or an integer value in the range 16 to the value of CAP_MAX_DURATION

STRTLOG command examples

Command example	Command description
>STRTLOG all 16	Starts all capacity logs currently running for 16 minutes.
>STRTLOG brief 16	Starts all logs except CAP103 for 16 minutes.
>STRTLOG capacity 16	Starts CAP100, CAP101, CAP102 logs for 16 minutes.
>STRTLOG detail 16	Starts CAP103 logs for 16 minutes.
>STRTLOG schedmap forever	Starts Cap100, CAP101 and CAP102 logs until the user enters the StopLog command.

SchedMAP MAP level

Introduction

The SchedMAP MAP level provides information on the Scheduler system, displaying utilization values. The class or class group utilization calculates as follows

$$\text{Class Utilization} = \frac{\text{Current time used by class X 100}}{\text{Time allocated or guaranteed for class}}$$

When a switch is running at capacity, most of the scheduler class fields are at or below 100. However, spare processing power reserved to handle PE faults is distributed evenly to all in-service PEs. Time not being used by CallP may be used by other classes. This occurs even at capacity. Therefore, a BKG utilization greater than a 100 can occur at capacity. Similarly, when a switch is not at capacity, some of the scheduler fields can show high values. This occurs because time not being used for call processing can be used by other classes.

Office parameters AUXCP and GTERM settings can be changed in table OFCENG. Changing these parameters will alter the amount of time that is available for call processing and change the reported call capacity utilization and ENGCATMP values. They will also impact the AUXCP and GTERM utilizations reported at the SchedMap sub-level.

SchedMAP MAP level layout

The following figure shows the layout of the SchedMAP MAP level.

SchedMAP MAP level (continued)

SchedMAP MAP level

```
 XACM      MS     IOD     Net      PM     CCS     Lns    Trks    Ext     APPL
  .         .       .       .       .       .       .       .       .       .

SCHEDMAP
 0 Quit     CATMP/HR  UTIL  ENGCATMP  MAXCATMP ENGLEVEL CCOVRLD CMICOVRLD PESC
 2 Parms      120000    75    160000    200000    BELOW     OFF       OFF   NO
 3
 4
 5          SCHED  FORE MAINT    DNC AUXCP    OM GTERM  BKG NETM  SNIP
 6             85     4     4      1     0   100     0  200    0     2
 7
 8
 9          SCHEDMAP:
10
11
12
13
14
15
16
17 StrtLog
18 StopLog
 XMAP0
Time  14:12   >
```

Note: The CAPCI command provides an alternative means of obtaining the information that is available at this MAP level. For information on the syntax of the CAPCI command, enter the following command on a MAP screen: HELP CAPCI.

SchedMAP MAP field definitions

The following section describes the information presented in SchedMAP MAP level.

Note: The expected occupancy (OOC_{exp}) and allocated occupancy (OCC_{alloc}) values are default values as of NA007.

AUXCP

This field contains the observed AUXCPCLASS utilization relative to the expected occupancy at capacity. This value is variable since it can be altered via the office parameter AUXCP_CPU_SHARE.

BKG

The field contains background class utilization relative to the expected occupancy at capacity. Background includes BKGCLASS and AUDITCLASS.

SchedMAP MAP level (continued)

DNC

The DNC field contains the observed NOSFTCLASS utilization relative to the expected occupancy allocated at capacity. DNC includes NOSFT class. This value is variable since it can be altered through packaging.

FORE

The foreground field contains operating system utilization relative to the expected occupancy at capacity. Foreground includes SYSTEMCLASS, SYSTOOLCLASS and INITCLASS.

GTERM

This contains the observed GTERMCLASS utilization relative to the expected occupancy at capacity. This value is variable since it can be altered via the office parameter GUARANTEED_TERMINAL_CPU_SHARE. Default value set to 1%.

MAINT

This field contains the observed MAINTCLASS utilization relative to the expected occupancy at capacity.

NETM

This field contains the NETMTCCLASS utilization relative to the expected occupancy allocated at capacity. This value is variable since it can be altered via packaging.

OM

The OM field contains the observed OM utilization relative to the expected occupancy at capacity. OM includes GOMCLASS and NGOMCLASS.

SCHED

This field contains the observed scheduler overhead utilization relative to the expected overhead occupancy at capacity.

SNIP

This field contains the observed SNIPCLASS utilization relative to the expected occupancy at capacity.

SchedMAP menu commands

Menu commands appear on the MAP command menu. Non-menu commands do not appear on the MAP menu list. Enter both menu and non-menu commands in the command interpreter input area.

SchedMAP MAP level (continued)

The following table contains a summary description SchedMAP MAP level commands.

Summary of SchedMAP MAP commands

Command	Menu #	Type	Function
Parms	2	Info	Display the current settings for office parameters and other engineerable settings.
Quit	0	Nav	Exit from the current MAP level and display a MAP level that is higher in the hierarchy of MAP levels.
StopLog	17	Op	Stops a log of Capacity MAP information.
StrtLog	18	Op	Starts a log of Capacity MAP information.

Parms

The Parms command displays the current setting for office parameters and other engineerable settings that affect call processing capacity. The following information displays:

GUARANTEED_TERMINAL_CPU_SHARE: Displays the current setting for this office parameter in table OFCENG. This value determines the expected occupancy for GTERM at capacity and determines the ratio shown in the GTERM field on the SchedMAP sub-level.

> ***Note:*** On XA-Core the office-parameter value does not translate directly into GTERM occupancy. The office parameter represents the processing capacity that has been allocated for GTERM. The capacity is expressed as a percentage. It is a percentage of the processing capacity of a single PE circuit pack of the type that is currently equipped in the XA-Core. The allocated capacity is distributed across the PE circuit packs in the XA-Core because they work in load-sharing mode.

AUXCP_CPU_SHARE: Displays the current setting for this office parameter in table OFCENG. This value determines the expected occupancy for AUXCP at capacity and determines the ratio shown in the AUXCP field on the SchedMAP sub-level.

CC_ENGLEVEL_WARNING_THRESHOLD: Displays the current setting for this office parameter in table OFCENG (default value of 100). This value triggers the display for the ENGLEVEL field at the Capacity MAP level and uses the value ABOVE or BELOW.

SchedMAP MAP level (continued)

NETM Share setting: Time allocated to NETMTC class. This value determines the expected occupancy for NETM at capacity and determines the ratio shown in the NETM field on the SchedMAP sub-level.

DNC Share setting: Time allocated to NOSFT class. This value determines the expected occupancy for NOSFT at capacity and determines the ratio shown in the DNC field on the SchedMAP sub-level.

SNIP Share setting: Time allocated to SNIP class. This value determines the expected occupancy for SNIP at capacity and determines the ratio shown in the SNIP field on the SchedMAP sub-level.

1% CPU Allocation: Relates the drop or increase in the engineered call attempts per hour expected based on a one percent change in the total CPU time guaranteed to a non-callp scheduler class.

> ***Note:*** The 1% CPU Allocation measurement is no longer supported in XA-Core. Given the multiprocessing nature of XA-Core, this type of measurement is no longer meaningful. Unlike BRISC, capacity is no longer directly proportional to the size of the payload scheduler classes. Changes to the payload scheduler classes can introduce more or less multiprocessing overhead, which cannot be predicted.

Menu selection number
2

Type
Informational

Parameters
There are no command parameters.

Options
There are no command options.

Command format examples
Example use of the Parms command is shown in the table titled "PARMS command example". The command syntax is shown in the example below:

SchedMAP MAP level (continued)

PARMS

PARMS command example

Command example	Command description
>Parms	Provides information on the current setting of office parameters and other engineerable settings.

Quit

The Quit command is a common command. The Quit command instructs the XA-Core system to exit from the current MAP level. You can exit to any MAP level that is higher in the hierarchy of MAP levels.

Note: The XA-Core system continues to execute any previous commands entered.

Menu selection number

0

Type

Navigational

Parameters

The Quit command parameters are optional.

All

Use the <all> parameter to exit from all MAP levels and display the CI prompt.

Incrname

Use the <incrname> parameter to exit from the current MAP level and display a MAP level higher in the MAP system hierarchy. The XA-Core system displays the MAP level that is one level higher in the MAP system hierarchy than the <incrname> (increment name) value.

Nlevel

Use the <nlevel> parameter to exit from the current MAP level and display a MAP level higher in the MAP system hierarchy. The <nlevel> value represents the number of DMS MAP levels to step back in the MAP system hierarchy.

Options

There are no command options.

Command format examples

Example use of the Quit command is shown in the table titled "QUIT command examples". The command syntax is shown in the example below:

QUIT <incrname | nlevel | all>

QUIT command examples

Command example	Command description
>QUIT	Use the Quit command with no parameters to exit from the current MAP level. Display the MAP level that is one level above the current MAP level.
>QUIT mtc	QUIT <incrname>: Exit from the current MAP level. Display the MAP level that is one level above the indicated MAP level name.
>QUIT 2	QUIT <nlevel>: Exit from the current MAP level. Display the MAP level that is two levels above the current MAP level in the MAP hierarchy.
>QUIT all	QUIT <all>: Exit from all MAP levels and display the CI prompt.

StopLog

The StopLog command is a menu command. The StopLog command instructs the log system to begin a log of Capacity MAP information.

> ***Note:*** The StopLog command will stop all capacity logs, not just those started by the user who entered the command.

Menu selection number

17

Type

Operational

Parameters

The StopLog command requires command parameters. If the user does not enter any parameters or enters invalid parameters, the MAP terminal displays an error message. The MAP terminal prompts the user to enter a correct parameter value.

All

Stops all logs.

SchedMAP MAP level (continued)

Capacity
Stops CAP100, CAP101, and CAP102 logs.

Detail
Stops and CAP103 logs.

SchedMAP
Stops CAP100, CAP101 and CAP102 logs.

Options
There are no command options.

Command format examples
Example use of the StopLog command is shown in the table titled "STOPLOG command examples". The command syntax is shown in the example below:

STOPLOG <all | capacity | detail | schedmap>

STOPLOG command examples

Command example	Command description
>STOPLOG all	Stop all capacity logs currently running.
>STOPLOG capacity	Stop CAP100, CAP101, and CAP102 logs.
>STOPLOG detail	Stop CAP103 logs.
>STOPLOG schedmap	Stop Cap100, CAP101 and CAP102 logs.

StrtLog
The StrtLog command is a menu command. The StrtLog command instructs the log system to begin a log of Capacity MAP information.

> ***Note:*** The CAP103 log uses additional CPU time. The user will receive a warning message when starting this log.

Menu selection number
18

Type
Operational

SchedMAP MAP level (continued)

Parameters
The StrtLog command requires command parameters. If the user does not enter any parameters or enters invalid parameters, the MAP terminal displays an error message. The MAP terminal prompts the user to enter a correct parameter value.

All
Starts all logs.

Brief
Starts all logs except CAP103.

Capacity
Starts CAP100, CAP101, and CAP102 logs.

Detail
Starts CAP103 logs.

Duration
An integer value that specifies how long (in minutes) the log should be left running. The lowest duration value that you can specify is 16. The highest duration value that you can specify is determined by the value of the CAP_MAX_DURATION office parameter. CAP_MAX_DURATION can be set to any integer value in the range 16 to 510. The default value is 255. (For information on CAP_MAX_DURATION, see the chapter titled "XA-Core data schema overview" in this document.)

Forever
If this parameter is entered, logs will continue to run until the StopLog command is entered.

SchedMAP
Starts CAP100, CAP101 and CAP102 logs.

Options
There are no command options.

SchedMAP MAP level (end)

Command format examples

Example use of the StrtLog command is shown in the table titled "STRTLOG command examples". The command syntax is shown in the example below:

STRTLOG <type> [<duration>]

where

<type> is one of the following: all, brief, capacity, detail, schedmap

<duration> is either the word forever, or an integer value in the range 16 to the value of CAP_MAX_DURATION

STRTLOG command examples

Command example	Command description
>STRTLOG all 16	Starts all capacity logs currently running for 16 minutes.
>STRTLOG brief 16	Starts all logs except CAP103 for 16 minutes.
>STRTLOG capacity 16	Starts CAP100, CAP101 and CAP102 logs for 16 minutes.
>STRTLOG detail 16	Starts CAP103 logs for 16 minutes.
>STRTLOG schedmap forever	Starts Cap100, CAP101 and CAP102 logs until the user enters the StopLog command.

Detail MAP level

Introduction

The Detail MAP sub-level provides information on call processing utilization and scheduler queues.

> ***Note:*** Accessing this sub-level causes an increase in utilization as collecting and reporting the information requires additional CPU time. The user will receive a warning message when accessing this sub-level.

The Detail sub-level uses a timer to stop monitoring and collecting data to prevent unnecessary increases in utilization. Office parameter CAP_MAX_DURATION in table OFCENG sets the default value of the timer. CAP_MAX_DURATION has a default value of 255 minutes. (For information on CAP_MAX_DURATION, see the chapter titled "XA-Core data schema overview" in this document.) Each user who enters the Detail sub-level will reset the timer for all users. Monitoring and collection of information will end when the user exits the MAP sub-level, or the timer expires.

Detail MAP level layout

The following figure shows the layout of the Detail MAP level.

Detail MAP level

```
 XACM      MS     IOD     Net      PM     CCS     Lns    Trks    Ext     APPL
  .         .       .       .       .       .       .       .       .       .

DETAIL
 0 Quit     CATMP/HR  UTIL  ENGCATMP  MAXCATMP ENGLEVEL CCOVRLD CMICOVRLD PESC
 2 Parms      120000    75    160000    200000    BELOW     OFF       OFF   NO
 3
 4
 5          OAvgDel 95%OLim PAvgDel 95%PLim BAvgDel 95%BLim           TIMER
 6             17ms    45ms    13ms    25ms    13ms    25ms        03:30:45
 7
 8          MavgDel 95%MLim OrigDeny InefDeny LCMdtsr LMdtsr
 9             12ms    25ms      --       --      --     --
10
11          Detail:
12
13          WARNING:
14           Please be advised that accessing this sub-level utilizes
15           additional CPU time.
16
17 StrtLog
18 StopLog
 XMAP0
Time  14:12   >
```

Detail MAP level (continued)

Detail MAP field definitions

The following sections describe the information presented in Detail MAP level.

95%BLim

The 95% background limit field is the same as 95% originating limit field but using the background priority queue (RDYBW) figures.This field represents the 95% high water mark for the background ready queue.

95%MLim

The 95% maintenance limit field represents the 95% high water mark for the maintenance ready queue.

95%OLim

The 95% originating limit field represents the 95% high water mark for the CCB originating queue.

95%PLim

The 95% progress limit field is the same as 95% originating limit field but using data on the CCB progress queue as opposed to the CCB originating queue. This field represents the 95% high water mark for the CCB progress queue.

BAvgDel

The background average delay field contains the weighted average waiting time on the background (BKGCLASS) ready queue.

InefDeny

The Ineffective Deny field is found in OM group CP2. The register counts origination/abandon pairs that are ignored because they were not serviced within 0.5s from the time the origination arrived.

LCMdtsr

The LCM dial tone speed recording field is the ratio of the number of calls delayed by more than 3s on LCMs, over the total number of calls processed by LCMs.

LMdtsr

The LM dial tone speed recording field is the ratio of the number of test calls delayed by more than 3s on LMs, over the total number of test calls processed by the LMs.

Detail MAP level (continued)

MAvgDel

The maintenance average delay field contains the weighted average waiting time on the maintenance (MAINTCLASS) ready queue.

OAvgDel

The originating average delay field contains the weighted average waiting time on the CCB originating queue.

OrigDeny

The origination denial field is found in OM group CP. The register counts originations that are ignored because they were not serviced within 3s of arrival.

PAvgDel

The progress average delay field is the same as the originating average delay field, but using data on the CCB progress queue as opposed to the CCB originating queue.

TIMER

This field indicates how much time is remaining until the data monitoring system is automatically shut off. The timer initializes to the value of CAP_MAX_DURATION and updates once every minute. Each time the seconds portion of the timer reaches 00, the MAP display updates. The timer resets to the value of CAP_MAX_DURATION if another user enters the Detail MAP level, or the Detail logs begin.

Detail menu commands

Menu commands appear on the MAP command menu. Non-menu commands do not appear on the MAP menu list. Enter both menu and non-menu commands in the command interpreter input area.

Detail MAP level (continued)

The following table contains a summary description of Detail level commands.

Summary of Detail MAP commands

Command	Menu #	Type	Function
Parms	2	Info	Display the current settings for office parameters and other engineerable settings.
Quit	0	Nav	Exit from the current MAP level and display a MAP level that is higher in the hierarchy of MAP levels.
StopLog	17	Op	Stops a log of Capacity MAP information.
StrtLog	18	Op	Starts a log of Capacity MAP information.

Parms

The Parms command displays the current setting for office parameters and other engineerable settings that affect call processing capacity. The following information displays:

GUARANTEED_TERMINAL_CPU_SHARE: Displays the current setting for this office parameter in table OFCENG. This value determines the expected occupancy for GTERM at capacity and determines the ratio shown in the GTERM field on the SchedMAP sub-level.

> ***Note:*** On XA-Core the office-parameter value does not translate directly into GTERM occupancy. The office parameter represents the processing capacity that has been allocated for GTERM. The capacity is expressed as a percentage. It is a percentage of the processing capacity of a single PE circuit pack of the type that is currently equipped in the XA-Core. The allocated capacity is distributed across the PE circuit packs in the XA-Core because they work in load-sharing mode.

AUXCP_CPU_SHARE: Displays the current setting for this office parameter in table OFCENG. This value determines the expected occupancy for AUXCP at capacity and determines the ratio shown in the AUXCP field on the SchedMAP sub-level.

CC_ENGLEVEL_WARNING_THRESHOLD: Displays the current setting for this office parameter in table OFCENG (default value of 100). This value triggers the display for the ENGLEVEL field at the Capacity MAP level and uses the value ABOVE or BELOW.

Detail MAP level (continued)

NETM Share setting: Time allocated to NETMTC class. This value determines the expected occupancy for NETM at capacity and determines the ratio shown in the NETM field on the SchedMAP sub-level.

DNC Share setting: Time allocated to NOSFT class. This value determines the expected occupancy for NOSFT at capacity and determines the ratio shown in the DNC field on the SchedMAP sub-level.

SNIP Share setting: Time allocated to SNIP class. This value determines the expected occupancy for SNIP at capacity and determines the ratio shown in the SNIP field on the SchedMAP sub-level.

1% CPU Allocation: Relates the drop or increase in the engineered call attempts per hour expected based on a one percent change in the total CPU time guaranteed to a non-callp scheduler class.

> ***Note:*** The 1% CPU Allocation measurement is no longer supported in XA-Core. Given the multiprocessing nature of XA-Core, this type of measurement is no longer meaningful. Unlike BRISC, capacity is no longer directly proportional to the size of the payload scheduler classes. Changes to the payload scheduler classes can introduce more or less multiprocessing overhead, which cannot be predicted.

Menu selection number
2

Type
Informational

Parameters
There are no command parameters.

Options
There are no command options.

Command format examples
Example use of the Parms command is shown in the table titled "PARMS command example". The command syntax is shown in the example below:

Detail MAP level (continued)

PARMS

PARMS command example

Command example	Command description
>Parms	Provides information on the current setting of office parameters and other engineerable settings.

Quit

The Quit command is a common menu command. The Quit command instructs the XA-Core system to exit from the current MAP level. You can exit to any MAP level that is higher in the hierarchy of MAP levels.

Note: The XA-Core system continues to execute any previous commands entered.

Menu selection number
0

Type
Navigational

Parameters
The Quit command parameters are optional.

All
Use the <all> parameter to exit from all MAP levels and display the CI prompt.

Incrname
Use the <incrname> parameter to exit from the current MAP level and display a MAP level higher in the MAP system hierarchy. The XA-Core system displays the MAP level that is one level higher in the MAP system hierarchy than the <incrname> (increment name) value.

Nlevel
Use the <nlevel> parameter to exit from the current MAP level and display a MAP level higher in the MAP system hierarchy. The <nlevel> value represents the number of DMS MAP levels to step back in the MAP system hierarchy.

Options
There are no command options.

Command format examples

Example use of the Quit command is shown in the table titled "QUIT command examples". The command syntax is shown in the example below:

QUIT <incrname | nlevel | all>

QUIT command examples

Command example	Command description
>QUIT	Use the Quit command with no parameters to exit from the current MAP level. Display the MAP level that is one level above the current MAP level.
>QUIT mtc	QUIT <incrname>: Exit from the current MAP level. Display the MAP level that is one level above the indicated MAP level name.
>QUIT 2	QUIT <nlevel>: Exit from the current MAP level. Display the MAP level that is two levels above the current MAP level in the MAP hierarchy.
>QUIT all	QUIT <all>: Exit from all MAP levels and display the CI prompt.

StopLog

The StopLog command is a menu command. The StopLog command instructs the log system to begin a log of Capacity MAP information.

Note: The StopLog command will stop all capacity logs, not just those started by the user who entered the command.

Menu selection number

17

Type

Operational

Parameters

The StopLog command requires command parameters. If the user does not enter any parameters or enters invalid parameters, the MAP terminal displays an error message. The MAP terminal prompts the user to enter a correct parameter value.

Detail MAP level (continued)

All
Stops all logs.

Capacity
Stops CAP100, CAP101, and CAP102 logs.

Detail
Stops CAP103 logs.

SchedMAP
Stops CAP100, CAP101 and CAP102 logs.

Options
There are no command options.

Command format examples
Example use of the StopLog command is shown in the table titled "STOPLOG command examples". The command syntax is shown in the example below:

STOPLOG <all | capacity | detail | schedmap>

STOPLOG command examples

Command example	Command description
>STOPLOG all	Stop all capacity logs currently running.
>STOPLOG capacity	Stop CAP100, CAP101 and CAP102 logs.
>STOPLOG detail	Stop CAP103 logs.
>STOPLOG schedmap	Stop Cap100, CAP101 and CAP102 logs.

StrtLog
The StrtLog command is a menu command. The StrtLog command instructs the log system to begin a log of Capacity MAP information.

> ***Note:*** The CAP103 log uses additional CPU time. The user will receive a warning message when starting this log.

Menu selection number
18

Type
Operational

Detail MAP level (continued)

Parameters
The StrtLog command requires command parameters. If the user does not enter any parameters or enters invalid parameters, the MAP terminal displays an error message. The MAP terminal prompts the user to enter a correct parameter value.

All
Starts all logs.

Brief
Starts all logs except CAP103.

Capacity
Starts CAP100, CAP101, and CAP102 logs.

Detail
Starts CAP103 logs.

Duration
An integer value that specifies how long (in minutes) the log should be left running. The lowest duration value that you can specify is 16. The highest duration value that you can specify is determined by the value of the CAP_MAX_DURATION office parameter. CAP_MAX_DURATION can be set to any integer value in the range 16 to 510. The default value is 255. (For information on CAP_MAX_DURATION, see the chapter titled "XA-Core data schema overview" in this document.)

Forever
If this parameter is entered, logs will continue to run until the StopLog command is entered.

SchedMAP
Starts CAP100, CAP101 and CAP102 logs.

Options
There are no command options.

Detail MAP level (end)

Command format examples

Example use of the StrtLog command is shown in the table titled "STRTLOG command examples". The command syntax is shown in the example below:

STRTLOG <type> [<duration>]

where

<type> is one of the following: all, brief, capacity, detail, schedmap

<duration> is either the word forever, or an integer value in the range 16 to the value of CAP_MAX_DURATION

STRTLOG command examples

Command example	Command description
>StrtLog all 16	Starts all capacity logs currently running for 16 minutes.
>StrtLog brief 16	Starts all logs except CAP103 for 16 minutes.
>StrtLog capacity 16	Starts CAP100, CAP101, and CAP102 logs for 16 minutes.
>StrtLog detail 16	Starts CAP103 logs for 16 minutes.
>Strtlog schedmap forever	Starts Cap100, CAP101 and CAP102 logs until the user enters the StopLog command.

IOCAP MAP level

Introduction

The IOCAP MAP sub-level provides IO utilization values and messaging throughput information for each IO service type (CMIC, ETHR and AMDI). The information is updated once every minute.

Note: The information provided in this MAP level refers only to IO capacity provided by HIOP circuit packs (NTLX04) and by HCMIC circuit packs (NTLX17). It does not refer to IO capacity provided by packlets.

Detail MAP level layout

The following figure shows the layout of the IOCAP MAP level.

IOCAP MAP level

```
 XACM      MS     IOD     Net      PM     CCS     Lns    Trks    Ext     APPL
  .         .       .       .       .       .       .       .       .       .

IOCAP
 0 Quit     CATMP/HR  UTIL  ENGCATMP  MAXCATMP ENGLEVEL CCOVRLD CMICOVRLD PESC
 2            120000    75    160000    200000    BELOW     OFF       OFF   NO
 3
 4          Service  IOUTIL%  TxMsg/s  TxSize  RxMsg/s  RxSize
 5           AMDI     64       15324      107    13234      91
 6           CMIC     17        4012      202     1254     102
 7           ETHR     10        8967      123     3456     123
 8
 9          IOCAP:
10
11
12
13
14
15
16
17
18
 XMAP0
Time  14:12   >
```

Note: The IOCAPCI command increment provides an alternative means of obtaining the information that is available at this MAP level. For information on the syntax of the commands available in the IOCAPCI command increment, enter the following command on a MAP screen: HELP IOCAPCI. Alternatively, see "IOCAPCI command increment" on page 7-45

IOCAP MAP level (continued)

IOCAP MAP field definitions

The following sections describe the information presented in IOCAP MAP level.

Service

This field identifies the IO service type: CMIC, ETHR, or AMDI.

IOUTIL%

This field lists the average utilization value of all active links for the specified IO service. The value is a percentage. The utilization value refers to the preceding minute. The system calculates and updates the value every minute.

The IO-utilization calculation is based on a mathematical prediction and therefore is subject to error (+/- 10%). IO utilization can vary from minute to minute, even with a constant call rate, and depends on many factors, including the amount of non-payload work. The IO-utilization accuracy should fall within the +/- 10% range, even in the event of a single fault, for example, a single link failure. The IO-utilization accuracy may be outside of the range in the event of a double fault, for example, double card failure.

The system may display a dash (“-”) in the field rather than a value. The system displays a dash if the status of a link or circuit pack has changed during the last one-minute sample period, or if the current IO configuration is one that is not supported by IOCAP (for example, if the system has IO packlets).

TxMsg/s

This field lists the average number of outgoing messages per second of the specified IO service type. The system calculates the per-second average based on the number of messages transmitted during the preceding minute. The system calculates and updates the value every minute.

The system may display a dash (“-”) in the field rather than a value. The system displays a dash if the status of a link or circuit pack has changed during the last one-minute sample period, or if the current IO configuration is one that is not supported by IOCAP (for example, if the system has IO packlets).

TxSize

This field lists the average size, in bytes, of outgoing messages of the specified IO service type. The system calculates the average size of messages transmitted during the preceding minute. The system calculates and updates the value every minute.

The system may display a dash (“-”) in the field rather than a value. The system displays a dash if the status of a link or circuit pack has changed during the last

one-minute sample period, or if the current IO configuration is one that is not supported by IOCAP (for example, if the system has IO packlets).

RxMsg/s

This field lists the number of incoming messages per second of the specified IO service type. The system calculates the per-second average based on the number of messages received during the preceding minute. The system calculates and updates the value every minute.

The system may display a dash ("-") in the field rather than a value. The system displays a dash if the status of a link or circuit pack has changed during the last one-minute sample period, or if the current IO configuration is one that is not supported by IOCAP (for example, if the system has IO packlets).

RxSize

This field lists the average size, in bytes, of incoming messages of the specified IO service type. The system calculates the average size of messages received during the preceding minute. The system calculates and updates the value every minute.

The system may display a dash ("-") in the field rather than a value. The system displays a dash if the status of a link or circuit pack has changed during the last one-minute sample period, or if the current IO configuration is one that is not supported by IOCAP (for example, if the system has IO packlets).

IOCAP menu commands

Menu commands appear on the MAP command menu. Non-menu commands do not appear on the MAP menu list. Enter both menu and non-menu commands in the command interpreter input area.

The following table contains a summary description of IOCAP level commands.

Summary of IOCAP MAP commands

Command	Menu #	Type	Function
Quit	0	Nav	Exit from the current MAP level and display a MAP level that is higher in the hierarchy of MAP levels.

IOCAP MAP level (continued)

Quit

The Quit command is a common menu command. The Quit command instructs the XA-Core system to exit from the current MAP level. You can exit to any MAP level that is higher in the MAP level hierarchy.

> ***Note:*** The XA-Core system continues to execute any previous commands entered.

Menu selection number

0

Type

Navigational

Parameters

The Quit command parameters are optional.

All

Use the <all> parameter to exit from all MAP levels and display the CI prompt.

Incrname

Use the <incrname> parameter to exit from the current MAP level and display a MAP level higher in the MAP system hierarchy. The XA-Core system displays the MAP level that is one level higher in the MAP system hierarchy than the <incrname> (increment name) value.

Nlevel

Use the <nlevel> parameter to exit from the current MAP level and display a MAP level higher in the MAP system hierarchy. The <nlevel> value represents the number of DMS MAP levels to step back in the MAP system hierarchy.

Options

There are no command options.

Command format examples

Example use of the Quit command is shown in the table titled "QUIT command examples". The command syntax is shown in the example below:

QUIT <incrname | nlevel | all>

QUIT command examples

Command example	Command description
>QUIT	Use the Quit command with no parameters to exit from the current MAP level. Display the MAP level that is one level above the current MAP level.
>QUIT mtc	QUIT <incrname>: Exit from the current MAP level. Display the MAP level that is one level above the indicated MAP level name.
>QUIT 2	QUIT <nlevel>: Exit from the current MAP level. Display the MAP level that is two levels above the current MAP level in the MAP hierarchy.
>QUIT all	QUIT <all>: Exit from all MAP levels and display the CI prompt.

IOCAPCI command increment

You can use the commands in the IOCAPCI command increment to display IO-utilization-history data.

To access the IOCAPCI command increment, type

>IOCAPCI

and press the Enter key.

To return to the CI environment, type

>QUIT

and press the Enter key.

IOCAP MAP level (continued)

In the IOCAPCI command increment, the following commands are available:

- IOMAX
- IOAVG
- DISP
- STATUS

IOMAX command in the IOCAPCI command increment

The IOMAX command displays the hourly high-watermark value captured for each IO service type (CMIC, ETHR, and AMDI). The displayed data covers a 31-day period. If data has not yet been collected for 31 days, then the display includes future time periods, for which no data is displayed.

Note: The data survives warm restarts, cold restarts, and reload restarts.

Parameters

You use one of the following parameters to indicate the IO service whose data you want to display: CMIC, ETHR, or AMDI. Alternatively, use the following parameter to display data for all IO services: ALL.

Command format examples

Here are examples of the command.

The following command displays the high-watermark values for the ETHR IO service:

>IOMAX ETHR

The following command displays the high-watermark values for all IO services (CMIC, ETHR, and AMDI):

>IOMAX ALL

IOCAP MAP level (continued)

Example use of the Quit command is shown in the table titled "IOMAX command examples". The command syntax is shown in the example below:

IOMAX <CMIC | ETHR | AMDI | ALL>

IOMAX command examples

Command example	Command description
>IOMAX ALL	Displays the high-watermark values for all IO services (CMIC, ETHR, and AMDI).
>IOMAX CMIC	Displays the high-watermark values for the CMIC IO service.
>IOMAX ETHR	Displays the high-watermark values for the ETHR IO service.
>IOMAX AMDI	Displays the high-watermark values for the AMDI IO service.

IOAVG command in the IOCAPCI command increment

The IOAVG command displays the hourly average percentage values captured for each IO service type (CMIC, ETHR, and AMDI). The displayed data covers a 32-day period. If data has not yet been collected for 31 days, then the display includes future time periods, for which no data is displayed.

Note: The data survives warm restarts, cold restarts, and reload restarts.

Parameters

You use one of the following parameters to indicate the IO service whose data you want to display: CMIC, ETHR, or AMDI. Alternatively, use the following parameter to display data for all IO services: ALL.

IOCAP MAP level (continued)

Command format examples

Example use of the IOAVG command is shown in the table titled "IOAVG command examples". The command syntax is shown in the example below:

IOAVG <CMIC | ETHR | AMDI | ALL>

IOAVG command examples

Command example	Command description
>IOAVG ALL	Displays average hourly percentage utilizations for all IO services (CMIC, ETHR, and AMDI).
>IOAVG CMIC	Displays average hourly percentage utilizations for the CMIC IO service.
>IOAVG ETHR	Displays average hourly percentage utilizations for the ETHR IO service.
>IOAVG AMDI	Displays average hourly percentage utilizations for the AMDI IO service.

DISP command in the IOCAPCI command increment

The DISP command displays the utilization and messaging-throughput values.

Parameters

You use the CURR parameter or the PREV parameter to indicate whether you want to display data from the last 60 minutes (CURR) or from the previous full-hour period (PREV).

You use one of the following parameters to indicate the IO service whose data you want to display: CMIC, ETHR, or AMDI. Alternatively, use the following parameter to display data for all IO services: ALL.

Command format examples

Example use of the DISP command is shown in the table titled "DISP command examples". The command syntax is shown in the example below:

DISP <CURR | PREV> <CMIC | ETHR | AMDI | ALL>

IOCAP MAP level (continued)

DISP command examples

Command example	Command description
>DISP CURR ALL	Displays utilization data for all IO services (CMIC, ETHR, and AMDI) for the last 60 minutes. (If you enter this command at 2:35, the displayed data is for 1:34 to 2:34.)
>DISP CURR CMIC	Displays utilization and message-throughput data for the CMIC IO service for the last 60 minutes. (If you enter this command at 2:35, the displayed data is for 1:34 to 2:34.).
>DISP CURR ETHR	Displays utilization and message-throughput data for the ETHR IO service for the last 60 minutes. (If you enter this command at 2:35, the displayed data is for 1:34 to 2:34.).
>DISP CURR AMDI	Displays utilization and message-throughput data for the AMDI IO service for the last 60 minutes. (If you enter this command at 2:35, the displayed data is for 1:34 to 2:34.).
>DISP PREV ALL	Displays utilization data for all IO services (CMIC, ETHR, and AMDI) for the previous one-hour period. (If you enter this command at 2:35, the displayed data is for 1:00 to 2:00.)
>DISP PREV CMIC	Displays utilization and message-throughput data for the CMIC IO service for the previous one-hour period. (If you enter this command at 2:35, the displayed data is for 1:00 to 2:00.)
>DISP PREV ETHR	Displays utilization and message-throughput data for the ETHR IO service for the previous one-hour period. (If you enter this command at 2:35, the displayed data is for 1:00 to 2:00.)
>DISP PREV AMDI	Displays utilization and message-throughput data for the AMDI IO service for the previous one-hour period. (If you enter this command at 2:35, the displayed data is for 1:00 to 2:00.)

IOCAP MAP level (end)

STATUS command in the IOCAPCI command increment

The STATUS command displays status information including the current version of the IOCAPCI tool, the timestamp in terms of hour and minute, the current IO-utilization values of all IO services (CMIC, ETHR, and AMDI), and the current value of the IO_WARNING_THRESHOLD office parameter.

Parameters

There are no command parameters.

Command format example

Example use of the STATUS command is shown in the table titled "STATUS command examples". The command syntax is shown in the example below:

STATUS

STATUS command examples

Command example	Command description
>STATUS	Displays status information

DMS-100 Family

XA-Core

Reference Manual

Copyright © 2000, 2001, 2002, 2003, 2004, 2005 Nortel Networks,
All Rights Reserved

NORTEL NETWORKS CONFIDENTIAL: The information contained in this document is the property of Northern Telecom. Except as specifically authorized in writing by Northern Telecom, the holder of this document shall keep the information contained herein confidential and shall protect same in whole or in part from disclosure and dissemination to third parties and use same for evaluation, operation, and maintenance purposes only.

Publication number: 297-8991-810
Product release: CSP21
Document release: Standard 11.02
Date: June 2005
Published in Canada

NORTEL NETWORKS™

How the world shares ideas.