MAIN MENU

Part No. 312755-E Rev 00
February 2003

4655 Great America Parkway
Santa Clara, CA 95054

Installing the Breaker Interface Panel for the 8010co Chassis

312755-E REV 00

NORTEL NETWORKS™

Copyright © 2003 Nortel Networks

All rights reserved. February 2003.

The information in this document is subject to change without notice. The statements, configurations, technical data, and recommendations in this document are believed to be accurate and reliable, but are presented without express or implied warranty. Users must take full responsibility for their applications of any products specified in this document. The information in this document is proprietary to Nortel Networks Inc.

Trademarks

Nortel Networks, the Nortel Networks logo, the Globemark, and Unified Networks are trademarks of Nortel Networks.

Adobe and Acrobat Reader are trademarks of Adobe Systems Incorporated.

Statement of conditions

In the interest of improving internal design, operational function, and/or reliability, Nortel Networks Inc. reserves the right to make changes to the products described in this document without notice.

Nortel Networks Inc. does not assume any liability that may occur due to the use or application of the product(s) or circuit layout(s) described herein.

International regulatory statements of conformity

This is to certify that the Nortel Networks 8000 Series chassis and components installed within the chassis were evaluated to the international regulatory standards for electromagnetic compliance (EMC) and safety and were found to have met the requirements for the following international standards:

- EMC - Electromagnetic Emissions – CISPR 22, Class A
- EMC - Electromagnetic Immunity – CISPR 24
- Electrical Safety – IEC 60950, with CB member national deviations

Further, the equipment has been certified as compliant with the national standards as detailed below.

National electromagnetic compliance (EMC) statements of compliance

FCC statement (USA only)

This equipment has been tested and found to comply with the limits for a Class A digital device, pursuant to Part 15 of the Federal Communications Commission (FCC) rules. These limits are designed to provide reasonable protection against harmful interference when the equipment is operated in a commercial environment. This equipment generates, uses, and can radiate radio frequency energy. If it is not installed and used in accordance with the instruction manual, it may cause harmful interference to radio communications. Operation of this equipment in a residential area is likely to cause harmful interference, in which case users will be required to take whatever measures may be necessary to correct the interference at their own expense.

ICES statement (Canada only)

Canadian Department of Communications Radio Interference Regulations

This digital apparatus (8000 Series chassis and installed components) does not exceed the Class A limits for radio-noise emissions from digital apparatus as set out in the Radio Interference Regulations of the Canadian Department of Communications.

Règlement sur le brouillage radioélectrique du ministère des Communications

Cet appareil numérique (8000 Series chassis) respecte les limites de bruits radioélectriques visant les appareils numériques de classe A prescrites dans le Règlement sur le brouillage radioélectrique du ministère des Communications du Canada.

CE marking statement (Europe only)

EN 55 022 statements

This is to certify that the Nortel Networks 8000 Series chassis and components installed within the chassis are shielded against the generation of radio interference in accordance with the application of Council Directive 89/336/EEC. Conformity is declared by the application of EN 55 022 Class A (CISPR 22).

Warning: This is a Class A product. In a domestic environment, this product may cause radio interference, in which case, the user may be required to take appropriate measures.

Achtung: Dieses ist ein Gerät der Funkstörgrenzwertklasse A. In Wohnbereichen können bei Betrieb dieses Gerätes Rundfunkstörungen auftreten, in welchen Fällen der Benutzer für entsprechende Gegenmaßnahmen verantwortlich ist.

Attention: Ceci est un produit de Classe A. Dans un environnement domestique, ce produit risque de créer des interférences radioélectriques, il appartiendra alors à l'utilisateur de prendre les mesures spécifiques appropriées.

EN 55 024 statement

This is to certify that the Nortel Networks 8000 Series chassis is shielded against the susceptibility to radio interference in accordance with the application of Council Directive 89/336/EEC. Conformity is declared by the application of EN 55 024 (CISPR 24).

EC Declaration of Conformity

This product conforms to the provisions of the R&TTE Directive 1999/5/EC.

VCCI statement (Japan/Nippon only)

This is a Class A product based on the standard of the Voluntary Control Council for Interference (VCCI) for information technology equipment. If this equipment is used in a domestic environment, radio disturbance may arise. When such trouble occurs, the user may be required to take corrective actions.

この装置は、情報処理装置等電波障害自主規制協議会（ＶＣＣＩ）の基準に基づくクラスＡ情報技術装置です。この装置を家庭環境で使用すると電波妨害を引き起こすことがあります。この場合には使用者が適切な対策を講ずるよう要求されることがあります。

National safety statements of compliance

CE marking statement (Europe only)

EN 60 950 statement

This is to certify that the Nortel Networks 8000 Series chassis and components installed within the chassis are in compliance with the requirements of EN 60 950 in accordance with the Low Voltage Directive. Additional national differences for all European Union countries have been evaluated for compliance. Some components installed within the 8000 Series chassis may use a nickel-metal hydride (NiMH) and/or lithium-ion battery. The NiMH and lithium-ion batteries are long-life batteries, and it is very possible that you will never need to replace them. However, should you need to replace them, refer to the individual component manual for directions on replacement and disposal of the battery

Nortel Networks Inc. software license agreement

This Software License Agreement (“License Agreement”) is between you, the end-user (“Customer”) and Nortel Networks Corporation and its subsidiaries and affiliates (“Nortel Networks”). PLEASE READ THE FOLLOWING CAREFULLY. YOU MUST ACCEPT THESE LICENSE TERMS IN ORDER TO DOWNLOAD AND/OR USE THE SOFTWARE. USE OF THE SOFTWARE CONSTITUTES YOUR ACCEPTANCE OF THIS LICENSE AGREEMENT. If you do not accept these terms and conditions, return the Software, unused and in the original shipping container, within 30 days of purchase to obtain a credit for the full purchase price.

“Software” is owned or licensed by Nortel Networks, its parent or one of its subsidiaries or affiliates, and is copyrighted and licensed, not sold. Software consists of machine-readable instructions, its components, data, audio-visual content (such as images, text, recordings or pictures) and related licensed materials including all whole or partial copies. Nortel Networks grants you a license to use the Software only in the country where you acquired the Software. You obtain no rights other than those granted to you under this License Agreement. You are responsible for the selection of the Software and for the installation of, use of, and results obtained from the Software.

1. Licensed Use of Software. Nortel Networks grants Customer a nonexclusive license to use a copy of the Software on only one machine at any one time or to the extent of the activation or authorized usage level, whichever is applicable. To the extent Software is furnished for use with designated hardware or Customer furnished equipment (“CFE”), Customer is granted a nonexclusive license to use Software only on such hardware or CFE, as applicable. Software contains trade secrets and Customer agrees to treat Software as confidential information using the same care and discretion Customer uses with its own similar information that it does not wish to disclose, publish or disseminate. Customer will ensure that anyone who uses the Software does so only in compliance with the terms of this Agreement. Customer shall not a) use, copy, modify, transfer or distribute the Software except as expressly authorized; b) reverse assemble, reverse compile, reverse engineer or otherwise translate the Software; c) create derivative works or modifications unless expressly authorized; or d) sublicense, rent or lease the Software. Licensors of intellectual property to Nortel Networks are beneficiaries of this provision. Upon termination or breach of the license by Customer or in the event designated hardware or CFE is no longer in use, Customer will promptly return the Software to Nortel Networks or certify its destruction. Nortel Networks may audit by remote polling or other reasonable means to determine Customer’s Software activation or usage levels. If suppliers of third party software included in Software require Nortel Networks to include additional or different terms, Customer agrees to abide by such terms provided by Nortel Networks with respect to such third party software.

2. Warranty. Except as may be otherwise expressly agreed to in writing between Nortel Networks and Customer, Software is provided “AS IS” without any warranties (conditions) of any kind. NORTEL NETWORKS DISCLAIMS ALL WARRANTIES (CONDITIONS) FOR THE SOFTWARE, EITHER EXPRESS OR IMPLIED, INCLUDING, BUT NOT LIMITED TO THE IMPLIED WARRANTIES OF MERCHANTABILITY AND FITNESS FOR A PARTICULAR PURPOSE AND ANY WARRANTY OF NON-INFRINGEMENT. Nortel Networks is not obligated to provide support of any kind for the Software. Some jurisdictions do not allow exclusion of implied warranties, and, in such event, the above exclusions may not apply.

3. Limitation of Remedies. IN NO EVENT SHALL NORTEL NETWORKS OR ITS AGENTS OR SUPPLIERS BE LIABLE FOR ANY OF THE FOLLOWING: a) DAMAGES BASED ON ANY THIRD PARTY CLAIM; b) LOSS OF, OR DAMAGE TO, CUSTOMER'S RECORDS, FILES OR DATA; OR c) DIRECT, INDIRECT, SPECIAL, INCIDENTAL, PUNITIVE, OR CONSEQUENTIAL DAMAGES (INCLUDING LOST PROFITS OR SAVINGS), WHETHER IN CONTRACT, TORT OR OTHERWISE (INCLUDING NEGLIGENCE) ARISING OUT OF YOUR USE OF THE SOFTWARE, EVEN IF NORTEL NETWORKS, ITS AGENTS OR SUPPLIERS HAVE BEEN ADVISED OF THEIR POSSIBILITY. The forgoing limitations of remedies also apply to any developer and/or supplier of the Software. Such developer and/or supplier is an intended beneficiary of this Section. Some jurisdictions do not allow these limitations or exclusions and, in such event, they may not apply.

4. General

a. If Customer is the United States Government, the following paragraph shall apply: All Nortel Networks Software available under this License Agreement is commercial computer software and commercial computer software documentation and, in the event Software is licensed for or on behalf of the United States Government, the respective rights to the software and software documentation are governed by Nortel Networks standard commercial license in accordance with U.S. Federal Regulations at 48 C.F.R. Sections 12.212 (for non-DoD entities) and 48 C.F.R. 227.7202 (for DoD entities).

b. Customer may terminate the license at any time. Nortel Networks may terminate the license if Customer fails to comply with the terms and conditions of this license. In either event, upon termination, Customer must either return the Software to Nortel Networks or certify its destruction.

c. Customer is responsible for payment of any taxes, including personal property taxes, resulting from Customer's use of the Software. Customer agrees to comply with all applicable laws including all applicable export and import laws and regulations.

d. Neither party may bring an action, regardless of form, more than two years after the cause of the action arose.

e. The terms and conditions of this License Agreement form the complete and exclusive agreement between Customer and Nortel Networks.

f. This License Agreement is governed by the laws of the country in which Customer acquires the Software. If the Software is acquired in the United States, then this License Agreement is governed by the laws of the state of New York.

Contents

Preface 13

Before you begin 13
Text conventions 14
Hard copy technical manuals 14
How to get help 15

Chapter 1
Overview 17

Physical description 17
Front panel 18
Shelf circuit breakers (upper and lower shelves) 18
Alarm module display panel 20
Front panel locking screws 22
Back panel 22
Shelf alarm connectors (upper and lower shelves) 22
Central office alarms 24
Power terminal block 25
Accessing the alarm module 28
Configuration example 30

Chapter 2
Installation 31

Preparing to install the breaker interface panel 31
Shipment contents 32
Additional equipment 33
Mounting hardware 33
DC input electrical requirements 33
Installing the breaker interface panel 34

Installing the hardware 34
Connecting cables to the chassis power supplies 36
Routing power supply cables to the BIP 45
Connecting the ground cables to the rack grounding strip 46
Connecting the power supply cables to the BIP 47
Connecting DC input power feeds to the BIP 50
Replacing covers 57
Installing shelf alarm cables 59
Verifying the installation 60
Initial power-up 61
Verifying the LEDs 61
Powering off the system 62

Chapter 3
Problem solving 65

Interpreting the LEDs 66
Diagnosing and correcting the problem 68
Corrective actions 69

Appendix A
Technical specifications 71

Environmental 71
Electrical 72
Physical dimensions 72
Electromagnetic emissions 72
Safety agency certification 72

Appendix B
BIP external cable pin assignments 73

Shelf alarm connectors (J1 and J2) 73
Office alarm connectors (J3 and J4) 75
Standalone office alarm connector (J5) 77
Index 79

Figures

Figure 1 Breaker interface panel 17
Figure 2 Front panel components 18
Figure 3 Shelf circuit breakers 19
Figure 4 Alarm module display panel 20
Figure 5 Back panel components 22
Figure 6 Shelf alarm connections (upper and lower shelves) 23
Figure 7 Configuring multiple BIPs to aggregate office alarms 24
Figure 8 Configuring standalone BIPs to report alarm status 25
Figure 9 Power terminal block 26
Figure 10 Power and grounding example 27
Figure 11 Opening the front panel 28
Figure 12 Accessing the alarm module 29
Figure 13 Default jumper settings 29
Figure 14 8010co Chassis configuration with BIP option 30
Figure 15 Contents of the BIP shipping container 32
Figure 16 Removing the plastic back cover from the BIP 35
Figure 17 Installing the BIP in the rack 35
Figure 18 Removing the 8010co Chassis bottom bezel 37
Figure 19 Location of power supplies 38
Figure 20 Loosening the power supply retaining screws 39
Figure 21 Disconnecting the power supply from the chassis backplane 39
Figure 22 Removing the plastic safety cover from the power supply 40
Figure 23 Power supply input and ground stud location 40
Figure 24 Power supply cables 41
Figure 25 Attaching the ground lead 41
Figure 26 Attaching the positive lead 42
Figure 27 Attaching the negative lead 43
Figure 28 Replacing the plastic safety cover on the power supply 43
Figure 29 Replacing the power supply 44

Figure 30 Labeling cables for the BIP 45
Figure 31 Rack grounding strip example 46
Figure 32 Attaching power supply cable leads to the BIP 47
Figure 33 Upper and lower shelf power cables connected to the BIP 48
Figure 34 Attaching the BIP ground cable 49
Figure 35 A and B feed example 51
Figure 36 Locating the A and B -48 VDC input feeds 52
Figure 37 Connecting the A and B -48 VDC input feeds to the BIP (1 of 2) 53
Figure 38 Connecting the A and B -48 VDC input feeds to the BIP (2 of 2) 54
Figure 39 Connecting the A/B input feed returns (1 of 2) 55
Figure 40 Connecting the A/B input feed returns (2 of 2) 56
Figure 41 Replacing the plastic back cover on the BIP 57
Figure 42 Replacing the 8010co Chassis bezel 58
Figure 43 Installing shelf alarm cables 59
Figure 44 BIP LEDs and indicators 66
Figure 45 J1 and J2 9-pin standard D-sub connector 73
Figure 46 J1 and J2 shelf alarm connector pinouts 74
Figure 47 J3 and J4 high-density 26-pin D-sub connector 75
Figure 48 J3 and J4 office alarm connectors 75
Figure 49 J5 high-density 26-pin D-sub connector 77
Figure 50 J5 standalone office alarm connector 77

Tables

Table 1 Alarm module display LEDs 20
Table 2 DC power requirements 33
Table 3 Single chassis and dual chassis input options 51
Table 4 BIP LEDs and indicators 66
Table 5 Corrective actions 69
Table 6 J1 and J2 shelf alarm connector pin assignments 74
Table 7 J3 and J4 office alarm connector pin assignments 76
Table 8 J5 standalone office alarm connector pin assignments 78

Preface

The breaker interface panel (BIP) provides power distribution and alarm status indications for one or two 8010co Chassis in an equipment rack. The status indications can be linked to other BIPs to provide total system status to the central office (CO).

This guide describes how to install the breaker interface panel in an equipment rack, connect cables, and interpret LEDs. It also includes technical specifications for the breaker interface panel.

For a list of related publications, see the release notes that accompany your software.

Before you begin

This guide is intended for qualified service personnel who need to install or replace a breaker interface panel. A qualified service person should have appropriate technical training and experience and be aware of hazards involved in installing and replacing customer-replaceable units (CRUs).

Text conventions

This guide uses the following text conventions:

`bold Courier text`	Indicates command names and options and text that you need to enter. Example: Use the **`dinfo`** command. Example: Enter **`show ip`** {**`alerts`**|**`routes`**}.
italic text	Indicates new terms, book titles, and variables in command syntax descriptions. Where a variable is two or more words, the words are connected by an underscore. Example: If the command syntax is `show at <valid_route>`, *`valid_route`* is one variable and you substitute one value for it.
`plain Courier text`	Indicates command syntax and system output, for example, prompts and system messages. Example: `Set Trap Monitor Filters`

Hard copy technical manuals

You can print selected technical manuals and release notes free, directly from the Internet. Go to the www.nortelnetworks.com/documentation URL. Find the product for which you need documentation. Then locate the specific category and model or version for your hardware or software product. Use Adobe* Acrobat Reader* to open the manuals and release notes, search for the sections you need, and print them on most standard printers. Go to Adobe Systems at the www.adobe.com URL to download a free copy of the Adobe Acrobat Reader.

You can purchase printed books and documentation sets from Vervante. To order printed documentation, go to Vervante at the www.vervante.com/nortel URL.

How to get help

If you purchased a service contract for your Nortel Networks product from a distributor or authorized reseller, contact the technical support staff for that distributor or reseller for assistance.

If you purchased a Nortel Networks service program, contact one of the following Nortel Networks Technical Solutions Centers:

Technical Solutions Center	Telephone
Europe, Middle East, and Africa	(33) (4) 92-966-968
North America	(800) 4NORTEL or (800) 466-7835
Asia Pacific	(61) (2) 9927-8800
China	(800) 810-5000

An Express Routing Code (ERC) is available for many Nortel Networks products and services. When you use an ERC, your call is routed to a technical support person who specializes in supporting that product or service. To locate an ERC for your product or service, go to the http://www.nortelnetworks.com/help/contact/erc/index.html URL.

Chapter 1
Overview

This chapter provides an overview of the BIP and covers the following topics:

- "Physical description" next
- "Accessing the alarm module" on page 28
- "Configuration example" on page 30

Physical description

The BIP provides a central rack location where redundant input DC power feeds are connected and routed to one or two 8010co Chassis. The BIP also provides an alarm module and display panel that monitors system components, generates alarms, and controls LED status indicators (requires 8010co Chassis configured with an 8691SF or 8691omSF CPU Module). The alarm module provides total system status to the central office.

Figure 1 shows the breaker interface panel. Descriptions of the front panel components follow the figure.

Figure 1 Breaker interface panel

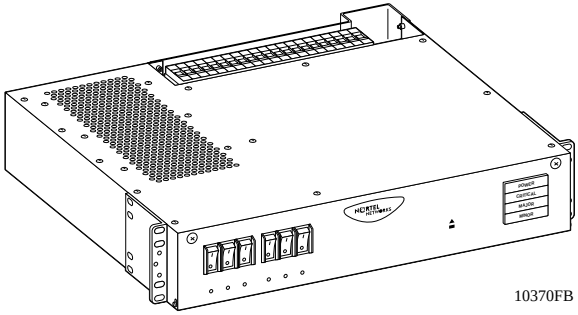

Front panel

Figure 2 shows the BIP front panel components.

Figure 2 Front panel components

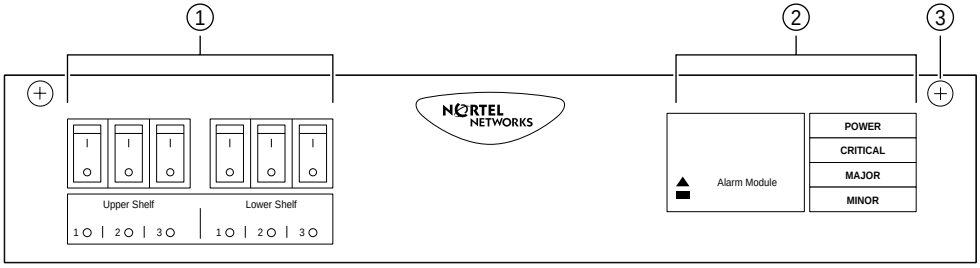

1 = Shelf circuit breakers (upper/lower shelves)
2 = Alarm module display panel
3 = Front-panel locking screws (x2)

10376EB

Shelf circuit breakers (upper and lower shelves)

Two groups of three circuit breakers provide input power to the power supplies for the upper and lower shelf 8010co Chassis (Figure 3):

- The first group, labeled “Upper Shelf,” provides input power to the upper shelf power supplies.
- The second group, labeled “Lower Shelf,” provides input power to the lower shelf power supplies.

If a power supply over current condition occurs, the associated circuit breaker trips and indicates the fault by lighting the associated circuit breaker’s LED (red).

Each of the six circuit breakers is current limited to 30 amperes @80 volts direct current. The circuit breakers are designed with internal auxiliary switches to provide fault indications to the alarm module and to the associated circuit breaker LEDs on the front panel. The alarm module reports circuit breaker fault conditions by lighting the MAJOR indicator on the Alarm Module display panel.

No alarm is generated to the alarm module when the circuit breaker is manually switched on (|) or off (O).

Figure 3 Shelf circuit breakers

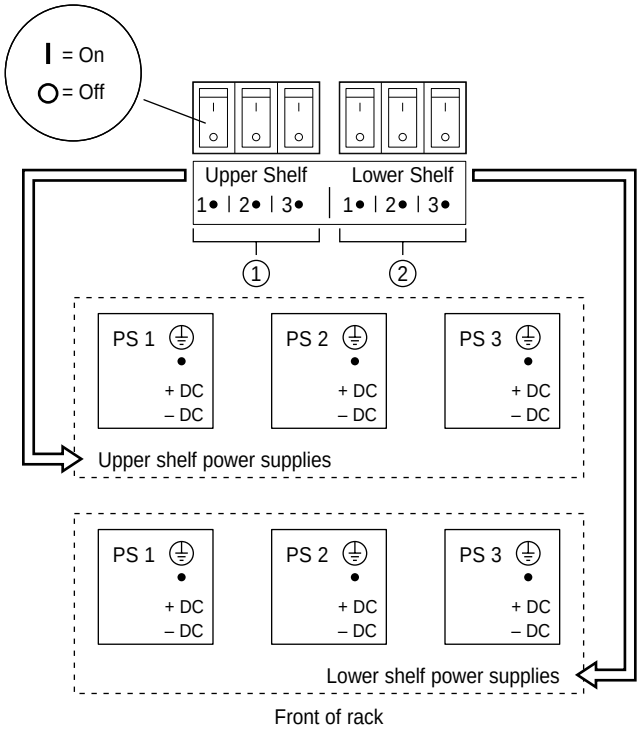

1 = Upper shelf LEDs
2 = Lower shelf LEDs

10372EA

Alarm module display panel

The alarm module display panel (Figure 4), located on the BIP front panel, provides visual status indications for one or two 8010co Chassis in a single rack.

Figure 4 Alarm module display panel

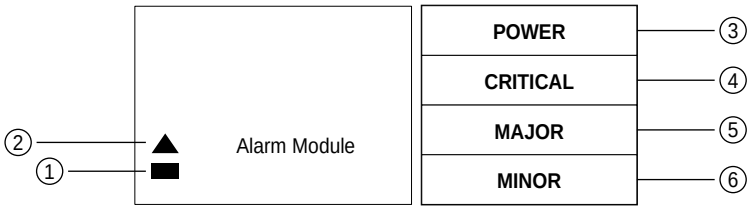

1 = Shelf alarm cable validation LED
2 = Shelf alarm cable fault LED
3 = POWER indicator
4 = CRITICAL fault indicator
5 = MAJOR fault indicator
6 = MINOR fault indicator

10377EA

See Table 1 for a description of the LEDs.

Table 1 Alarm module display LEDs

Item	Label/Icon	Type	Color/State	Description
1	▬	LED	Green/On steady	Shelf alarm cable validation LED —The alarm cables are properly connected to the shelves.
2	▲	LED	Red/On steady	Shelf alarm cable fault LED—The shelf alarm cables are missing, not secured, or the shelf alarm jumpers are not configured properly (see "Accessing the alarm module" on page 28). This fault condition also lights the MINOR fault indicator (see Minor fault description in this table).
3	POWER	Indicator	White/On steady	Power indicator—The external DC power is available to the BIP.
4	CRITICAL	Indicator	Red/On steady	Critical fault indicator—Indicates that a severe service-affecting condition has occurred that requires immediate corrective action. Common causes for this type of fault condition include: • Line card failure • Temperature fault • CPU fault when only one CPU is installed

Table 1 Alarm module display LEDs (continued)

Item	Label/Icon	Type	Color/State	Description
5	MAJOR	Indicator	Red/On steady	Major fault indicator—Indicates that the system hardware or software has identified a serious disruption of service or that an important circuit failure has occurred. Common causes for this type of fault condition include: • CPU fault when two CPUs are installed • Two fan trays are faulty • Two power supplies are faulty
6	MINOR	Indicator	Yellow/On steady	Minor fault indicator —Indicates a problem that does not have a serious effect on customer service, or a problem in circuits that are not essential to device operation. Common causes for this type of fault condition include: • Shelf alarm cables not installed or not connected properly. • Alarm module jumpers configured incorrectly. • One power supply is faulty • One fan tray is faulty

The alarm module can also be linked to other BIPs, and can provide visual and audible alarms to aisle alarms and to the central office (see "Central office alarms" on page 24).

Alarm support for the BIP is provided by the 8691SF or 8691omSF central processing unit (CPU) in the 8010co Chassis. The following conditions in the 8010co Chassis generate alarms:

- Power supply failure
- Fan failure
- Overheating
- Line card error
- Master CPU failure

For details about the 8691SF or 8691omSF Central Processing Unit (CPU), see the appropriate product chassis installation manual.

Front panel locking screws

The front panel locking screws allow you to open the front panel to access the alarm module. The alarm module contains jumpers that you use to configure your system alarm parameters.

For information about configuring your system alarm parameters, see “Accessing the alarm module” on page 28.

Back panel

Figure 5 shows the BIP back panel configuration (plastic back cover not shown).

Descriptions of the back panel components follow the figure.

Figure 5 Back panel components

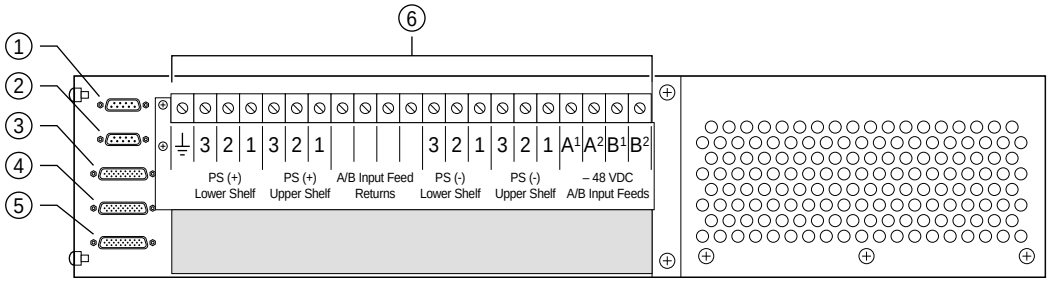

1 = J1 Upper shelf alarm connector
2 = J2 Lower shelf alarm connector
3 = J3 Central office alarm "in"
4 = J4 Central office alarm "out"
5 = J5 Standalone office alarm connector
6 = TB1 Power terminal block

10367EA

Shelf alarm connectors (upper and lower shelves)

The shelf alarm connectors allow you to configure the BIP to control more than one 8010co Chassis.

Note: The BIP ships from the factory with default alarm configurations set for a single chassis in the lower shelf of the rack. If you install a second chassis, you must also configure the jumper on the alarm module to support that configuration. See “Accessing the alarm module” on page 28 for information about jumper settings for your configuration.

Figure 6 shows the location of the shelf alarm connectors on the BIP and on two 8010co Chassis (upper and lower shelves).

Figure 6 Shelf alarm connections (upper and lower shelves)

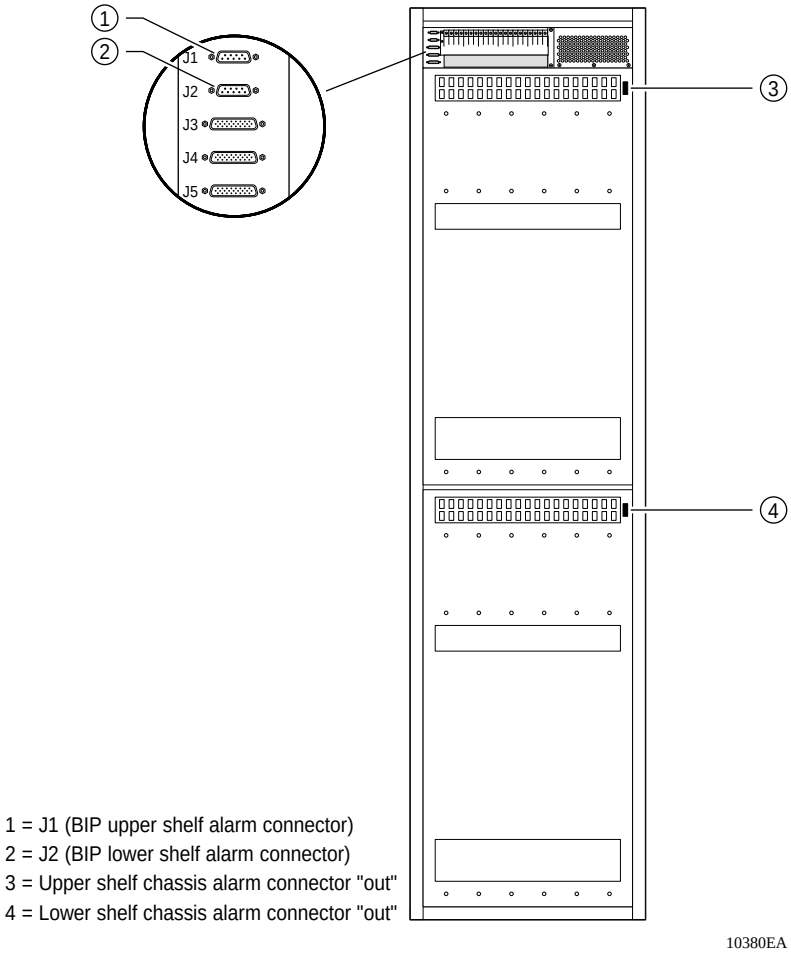

Central office alarms

The central office alarm connectors allow you to aggregate alarms from multiple BIPs and route them to an aisle alarm and to the central office. Figure 7 shows three BIPs configured to aggregate alarms from three racks. You can configure up to ten BIPs in a series configuration to aggregate alarms.

Central office alarm cables are not provided as part of your BIP shipment. To build your own central office alarm cables, see Appendix B, “BIP external cable pin assignments,” on page 73.

Figure 7 Configuring multiple BIPs to aggregate office alarms

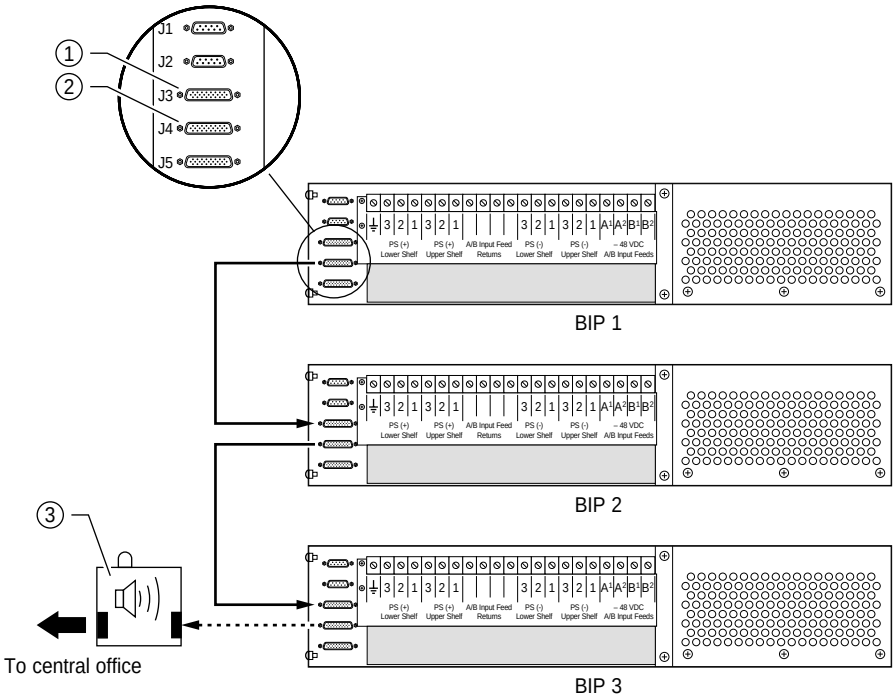

1 = J3 (central office alarm "in")
2 = J4 (central office alarm "out")
3 = Aisle alarm

10371EA

You can also configure one or more standalone BIPs to individually report alarm status to the central office (Figure 8).

This type of configuration allows you to independently monitor and control the external audible and visual alarm status indications of the BIP at the central office.

Figure 8 Configuring standalone BIPs to report alarm status

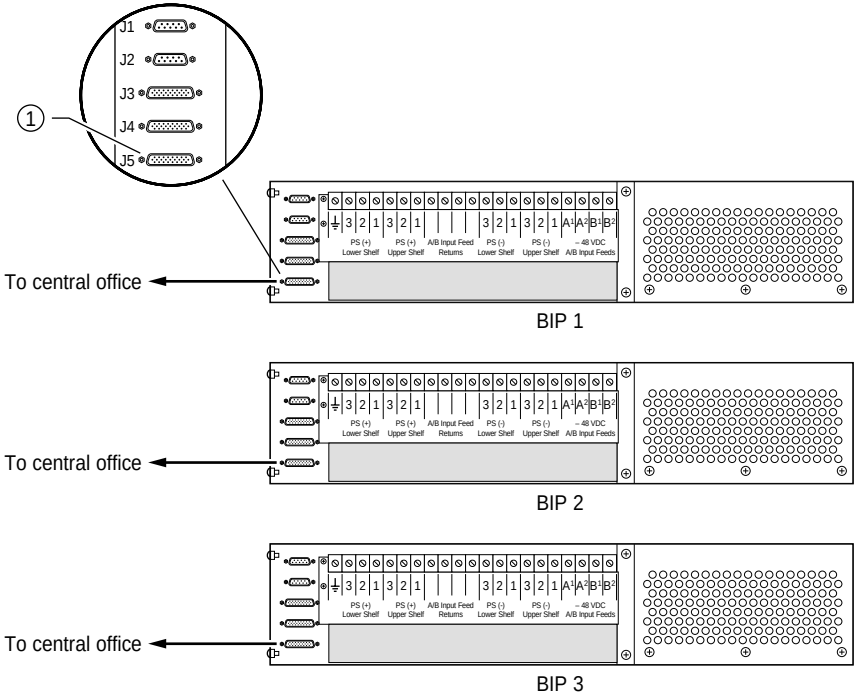

1 = J5 (standalone office alarm connector)

10419EA

Power terminal block

The power terminal block is located on the back panel of the BIP. As shown in Figure 9, the power terminal block provides 21 connection blocks for DC input and output feeds.

Figure 9 Power terminal block

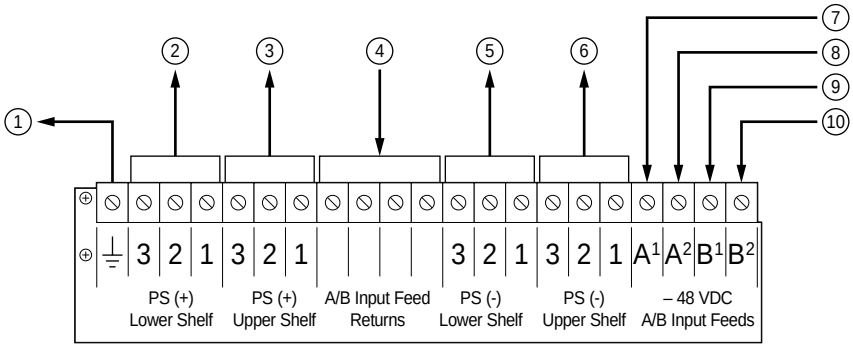

1 = To frame (rack) ground
2 = To lower shelf power supplies (+DC terminals)
3 = To upper shelf power supplies (+DC terminals)
4 = Returns (A/B input feeds)
5 = To lower shelf power supplies (-DC terminals)
6 = To upper shelf power supplies (-DC terminals)
7 = -48 VDC input feed (Primary A feed)
8 = -48 VDC input feed (Secondary A feed)
9 = -48 VDC input feed (Primary B feed)
10 = -48 VDC input feed (Secondary B feed)

10379EA

Figure 10 shows an example of the BIP power terminal block cabling including ground connections for two 8010co Chassis and installed power supplies.

As shown in this example, both upper and lower chassis are each fully configured with three power supplies (one is redundant) and require four 60 A direct current input feeds to the BIP (two feeds are redundant).

For more information, see “Connecting DC input power feeds to the BIP” on page 50.

Caution: All DC input feeds to the breaker interface panel must be equipped with an overcurrent protection device that limits current to a maximum of 60 A. The overcurrent protection device can be any approved, standard-delay, 60 A fuse or circuit breaker with an interrupting current rating of not less than 10,000 A.

Figure 10 Power and grounding example

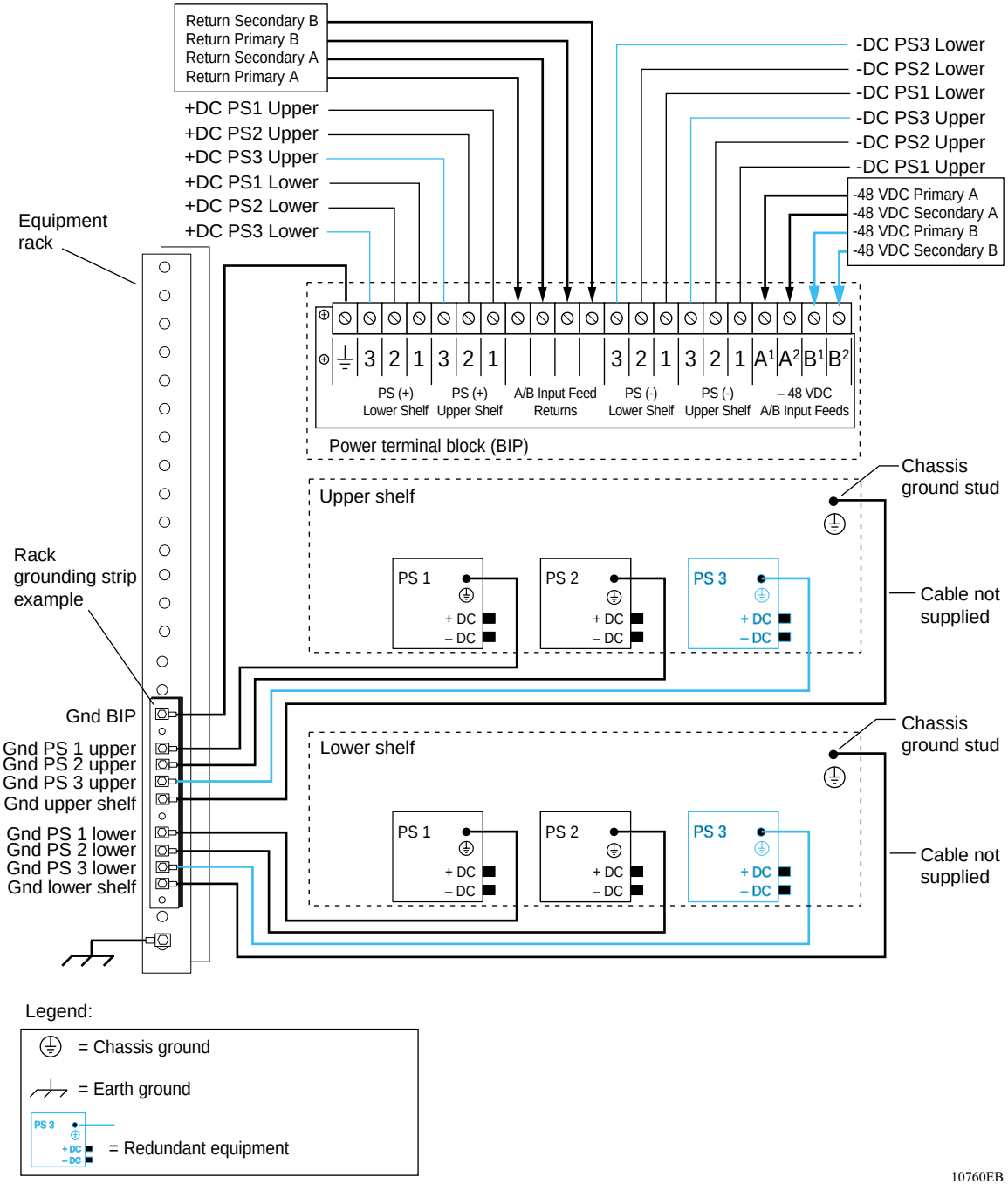

Accessing the alarm module

Danger: Make sure that the DC power source is off or disconnected at the remote end before you perform any of the steps in this section. Be sure that the DC input source power is locked out and tagged.

The alarm module contains jumpers that you can configure to allow the BIP to monitor the shelf alarm cables for a single or dual chassis installation. The BIP ships from the factory with default jumper configurations set for a single chassis in the lower shelf of the rack. If you install a second chassis in the upper shelf, you must configure the jumpers on the alarm module to support that configuration.

Note: The jumper configuration has no affect on the chassis status alarms.

The BIP front panel opens to provide access to the jumpers on the alarm module.

To open the front panel:

1 Using a Phillips screwdriver, loosen the two front panel locking screws (Figure 11).

Figure 11 Opening the front panel

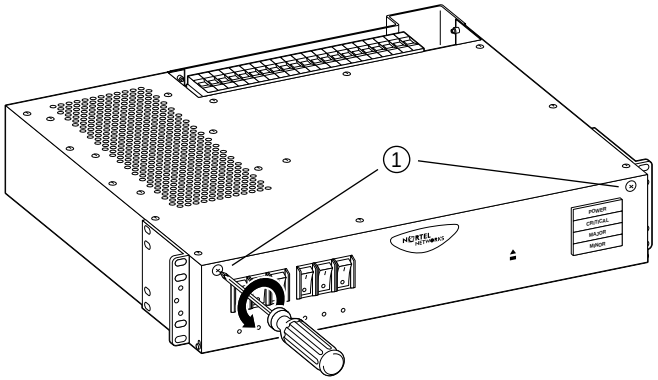

1 = Front panel locking screws (x 2)

10375FB

2 Gently lower the front panel to expose the alarm module (Figure 12).

Figure 12 Accessing the alarm module

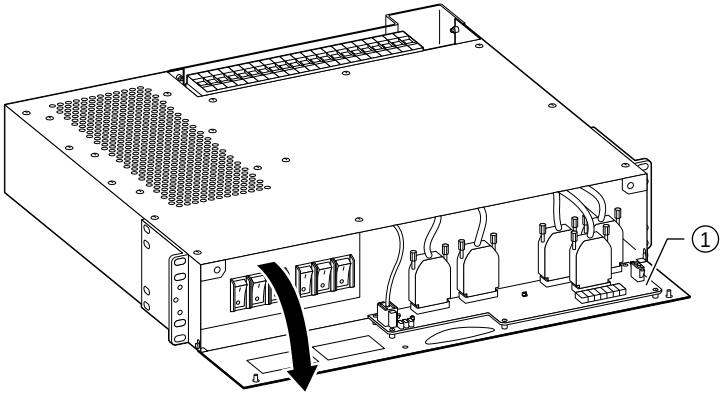

1 = Alarm module

10365FB

Figure 13 shows a close-up view of the alarm module with jumpers J8 and J9 configured to monitor the shelf alarm cable for a single chassis in the lower shelf only (default setting). Monitoring of the upper shelf alarm cable is disabled with jumper J8, by default.

To enable the BIP to monitor the shelf alarm cable for a second chassis in the upper shelf, you must place the upper shelf alarm jumper (J8) over pins 2 and 3.

Figure 13 Default jumper settings

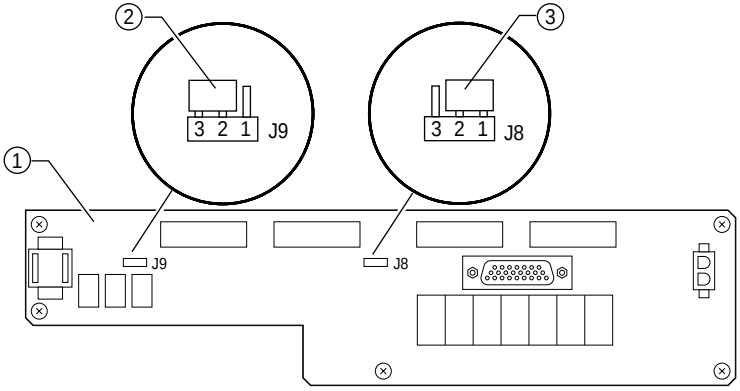

1 = Alarm module
2 = J9 Lower shelf alarm jumper (enabled)
3 = J8 Upper shelf alarm jumper (disabled)

10366EB

Configuration example

Figure 14 shows a typical configuration using the optional breaker interface panel.

Figure 14 8010co Chassis configuration with BIP option

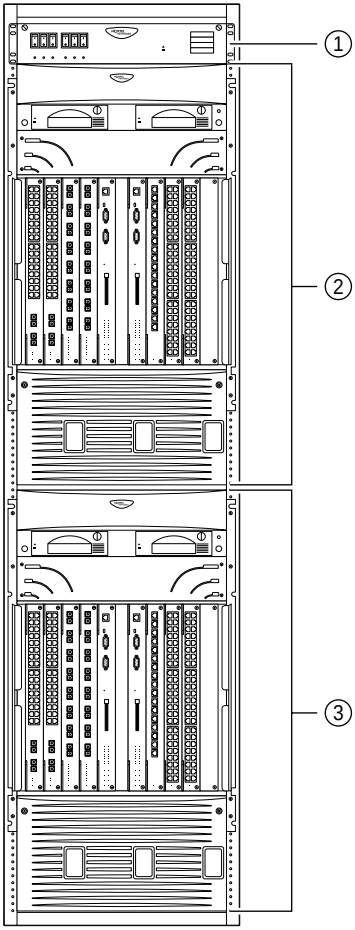

1 = Breaker interface panel
2 = 8010co Chassis (upper shelf position)
3 = 8010co Chassis (lower shelf position)

10420EB

Chapter 2
Installation

This chapter describes how to install the breaker interface panel and covers the following topics:

- "Preparing to install the breaker interface panel" next
- "Installing the breaker interface panel" on page 34
- "Verifying the installation" on page 60

Preparing to install the breaker interface panel

Before begin the installation, verify that:

- Your shipment is complete and undamaged.
- You have the cables, tools, and other equipment that you need.
- Your installation site meets the physical, electrical, and environmental requirements (see Appendix A, "Technical specifications," on page 71).

The sections that follow help you prepare for installation.

Note: For a list of requirements that must be met for the 8010co Chassis, see the appropriate product chassis installation manual.

Shipment contents

Inspect all items for shipping damage. If you detect any damage, do not install the BIP. Call the Nortel Networks Technical Solutions Center in your area (see "How to get help" on page 15).

Your BIP shipment contains the following items (Figure 15):

Figure 15 Contents of the BIP shipping container

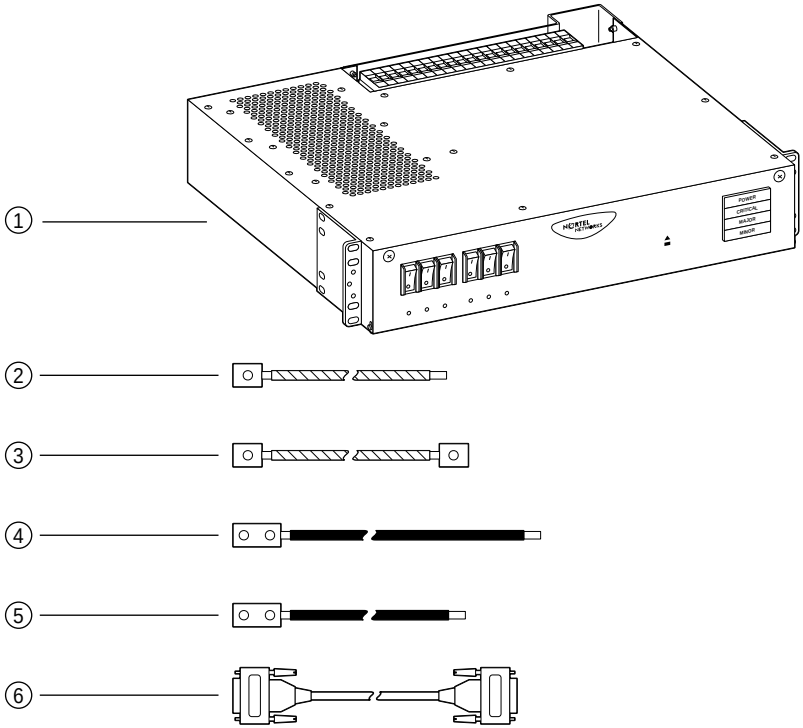

1 = Breaker interface panel (BIP)
2 = BIP ground cable (x 1)
3 = 90-inch power supply ground cable (x 6)
4 = 125-inch power supply cable (x 6)
5 = 90-inch power supply cable (x 6)
6 = Shelf alarm cables (x 2)

10369FC

Additional equipment

To install the BIP, you might need items that are not part of the BIP installation kit. Before installing the BIP hardware, ensure that you obtain all the cables, tools, and other equipment that you need. For information about office alarm cable pin assignments, see Appendix B, “BIP external cable pin assignments,” on page 73.

Mounting hardware

You must install the BIP in an equipment rack. You will need the following tools:

- Phillips screwdriver
- 7/16-inch hex wrench

You will also need a rack that meets the following specifications:

- Heavy-duty steel construction
- Electronics Industries Association (EIA) standard hole-spacing

You can install the BIP in the following 19-in. (48.26 cm) rack configurations:

- Standard 19-inch rack
- Hendry rack

You can install the BIP in a standard 23-inch rack using adapters provided by the rack supplier. If your rack does not have threaded rail holes, you must use cagenuts that are appropriate for the specific rack model you are using.

DC input electrical requirements

The installation site must meet the following electrical requirements for DC power (Table 2):

Table 2 DC power requirements

Nominal input voltage	Maximum input current	Physical
-48/-60 VDC nominal	60 A	Reinforced insulation from the main DC power

Installing the breaker interface panel

Warning: Make sure that the DC power source is off or disconnected at the remote end before you perform any of the steps in this section. You may need to switch a circuit breaker off or turn off power at the DC input source. Be sure that the DC input source power is locked out and tagged.

This section covers the following topics:

- "Installing the hardware" next
- "Connecting cables to the chassis power supplies" on page 36
- "Routing power supply cables to the BIP" on page 45
- "Connecting the ground cables to the rack grounding strip" on page 46
- "Connecting the power supply cables to the BIP" on page 47
- "Connecting DC input power feeds to the BIP" on page 50
- "Replacing covers" on page 57
- "Installing shelf alarm cables" on page 59

Installing the hardware

Before beginning the BIP hardware installation, make sure that you:

- Always install the BIP in the uppermost position in the rack to allow for maximum convection cooling requirements.
- Ground the rack to the same grounding electrode used by the power service in the area.

  The ground path must be permanent and must not exceed 1 ohm of resistance from the rack to the grounding electrode.

To install the BIP:

1 Remove the plastic back cover from the BIP terminal block (Figure 16).

Figure 16 Removing the plastic back cover from the BIP

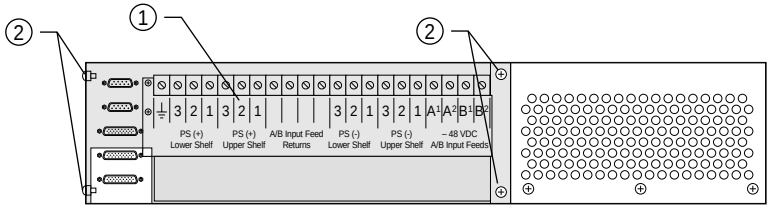

1 = Back cover (plastic)
2 = Cover screws (x 4)

10421EA

Caution: The BIP weighs 33.9 lbs (15.4 kg). The next step requires two persons to mount the BIP in the rack.

2 Position the BIP in the uppermost position in the rack and align the holes in the mounting bracket with the holes in the rack.

3 Insert 2 screws, appropriate for your rack type, into each mounting bracket and tighten them (Figure 17).

Figure 17 Installing the BIP in the rack

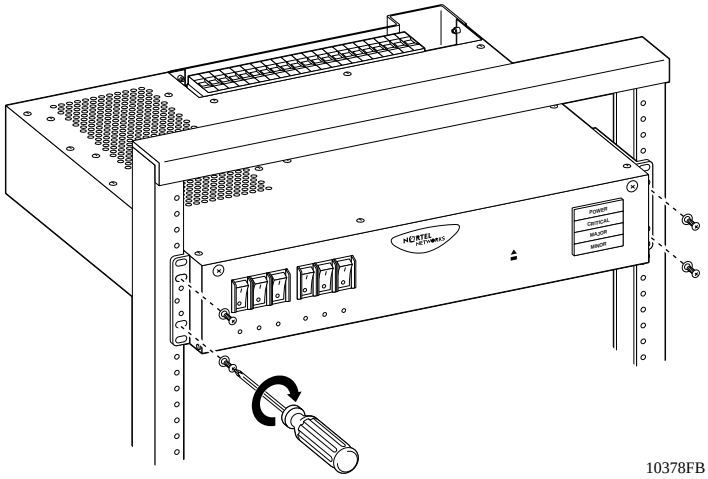

10378FB

4 After the BIP is secured in the rack, go to the next section, "Connecting cables to the chassis power supplies."

Connecting cables to the chassis power supplies

This section describes how to connect the BIP power cables to the 8010co Chassis DC power supplies. These procedures assume that all required power supplies were previously installed during the 8010co Chassis installation.

Note: This guide does not describe how to remove or replace power supplies in the 8010co Chassis. For detailed instructions about adding power supplies or modifying an existing configuration, see the appropriate product chassis installation manual.

Before beginning the procedures in this section, note the following:

- A 8010co Chassis configuration can consist of one or two chassis in a single rack. If a single chassis is installed, it is always installed in the lower shelf position.

Note: For a single chassis installation, always install the chassis in the lower shelf position to stabilize the rack.

- Each chassis can be configured with up to three power supplies. The cabling for each power supply comprises three conductors: the positive lead wire, the negative lead wire, and the ground lead.
- To access the power supplies, you may have to remove the bottom front bezel from both the upper shelf and lower shelf 8010co Chassis.

Warning: Make sure that the DC power source is off or disconnected at the remote end before you perform any of the steps in this section. You may need to switch a circuit breaker off or turn off power at the DC input source. Be sure that the DC input source power is locked out and tagged.

To connect cables to the chassis power supplies:

1 Remove the 8010co Chassis bottom bezels (if required).

a Using a Phillips screwdriver, loosen the 2 captive screws securing the bezel to the chassis (Figure 18).

b Pull the top of the bezel forward and then lift the bezel from the two tabs on the bottom of the chassis.

c Repeat steps a and b for the second chassis, if installed.

Figure 18 Removing the 8010co Chassis bottom bezel

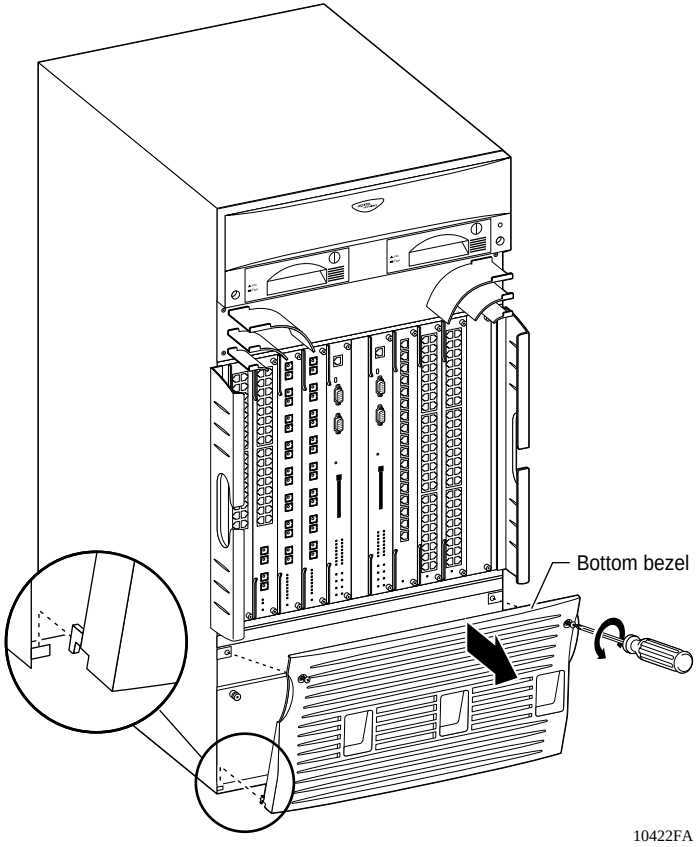

2 Locate the power supplies (Figure 19).

With the bezel removed, you can see the power supplies. The chassis can contain up to three power supplies. (Power supplies reside in bay 1, bay 2, and bay 3, viewed left to right from the front of the chassis.)

Figure 19 Location of power supplies

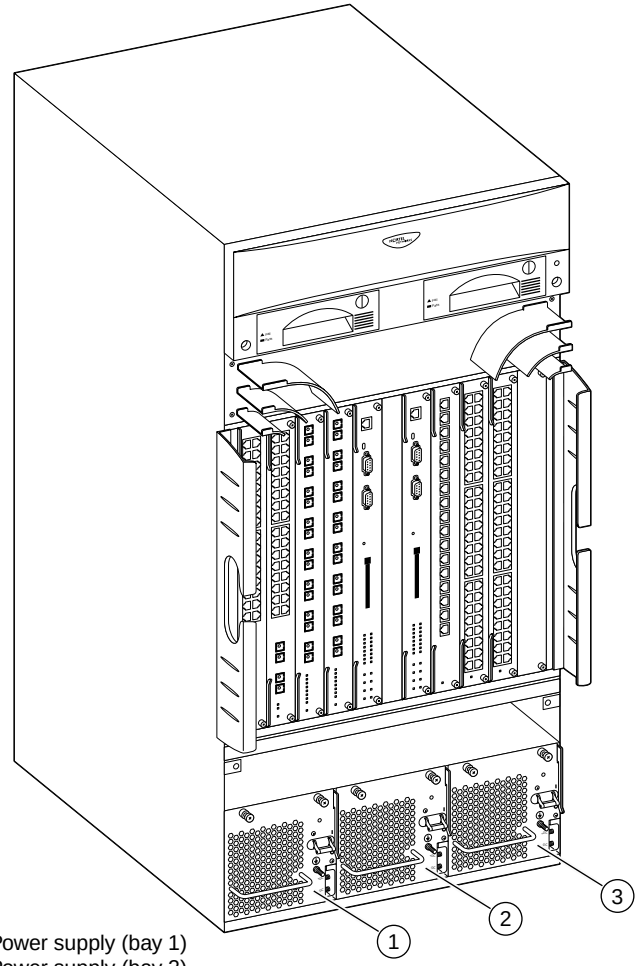

1 = Power supply (bay 1)
2 = Power supply (bay 2)
3 = Power supply (bay 3)

3 Loosen the 2 retaining screws on the power supply located in bay 1 in the lower chassis (Figure 20).

Figure 20 Loosening the power supply retaining screws

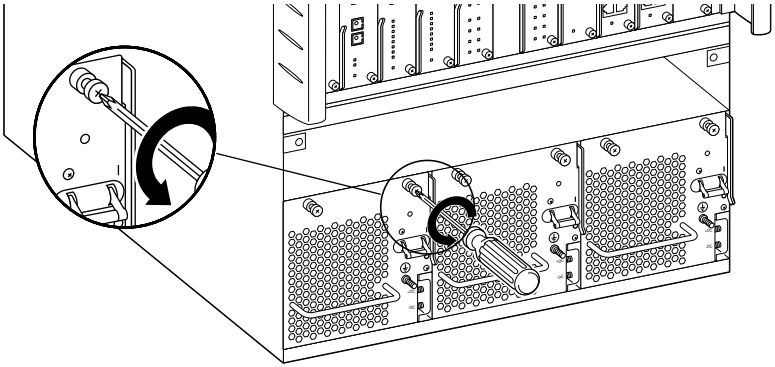

10424FA

4 Lift the extractor lever to disconnect the power supply from the backplane connector, and then pull the power supply partially out of the chassis (Figure 21).

Figure 21 Disconnecting the power supply from the chassis backplane

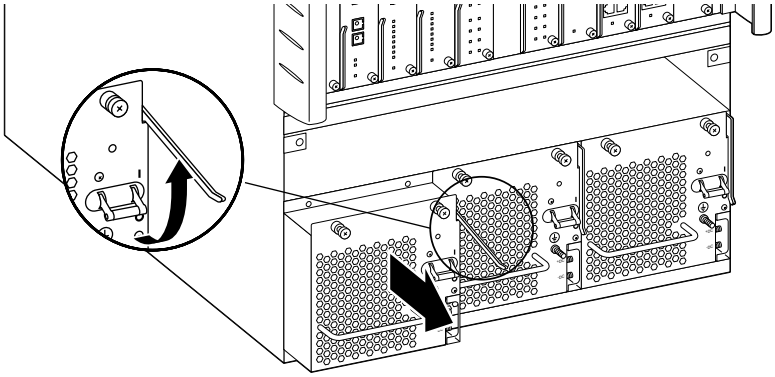

10425FA

5 Remove the Phillips screw securing the plastic safety cover to the power supply, and then remove the cover (Figure 22).

Save the Phillips screw and the cover for replacement later.

Figure 22 Removing the plastic safety cover from the power supply

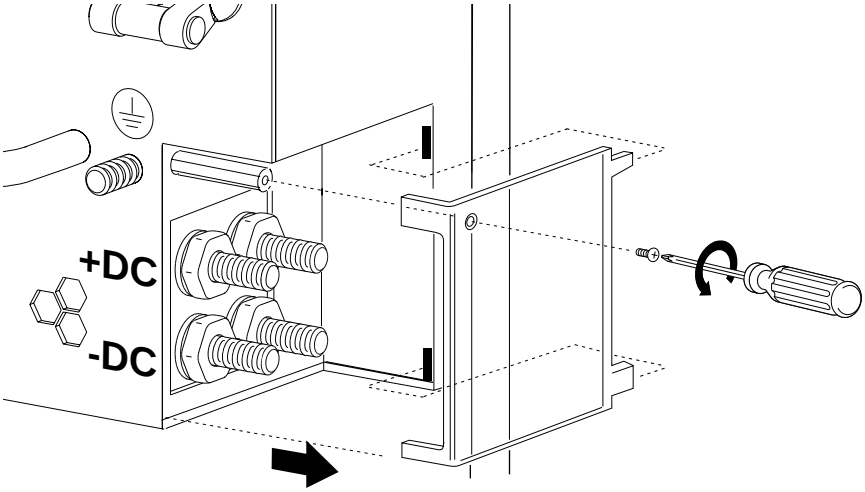

10426FA

6 Note the position of the ground stud and of the positive and negative power supply inputs (Figure 23).

Figure 23 Power supply input and ground stud location

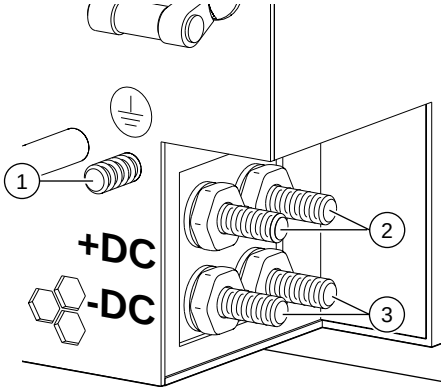

1 = Ground stud
2 = Positive power inputs
3 = Negative power inputs

10427FA

7 Locate the following items in the shipping container (Figure 24).

- 125-inch power cables — for power supplies located in the lower chassis
- 90-inch power cables — for power supplies located in the upper chassis
- 90-inch ground cables — for grounding of power supplies located in the upper and lower chassis

Figure 24 Power supply cables

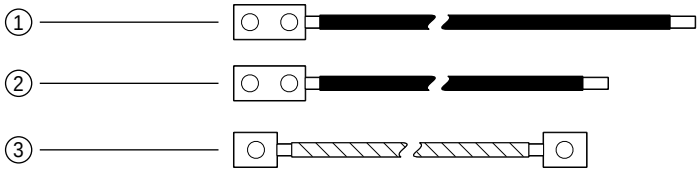

1 = 125-inch power supply cables (x 6)
2 = 90-inch power supply cables (x 6)
3 = 90-inch power supply ground cables (x 6)

10428FC

8 Attach one end of a 90-inch ground cable to the grounding stud on the power supply. Use a 7/16-inch hex wrench to fasten the hardware in the correct order (Figure 25).

The hardware (washers and nuts) are included with the power supply shipment.

Figure 25 Attaching the ground lead

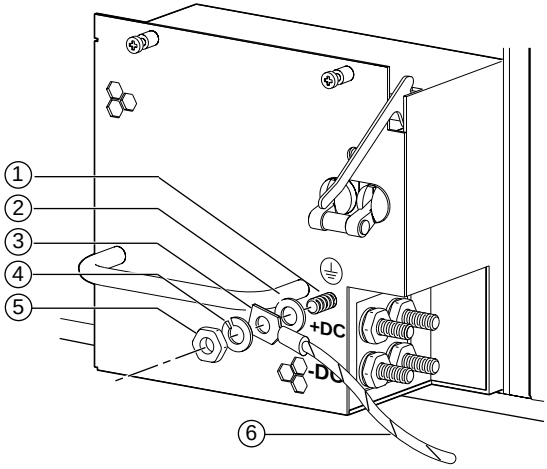

1 = Grounding stud
2 = Flat washer
3 = Crimp lug
4 = Lock washer
5 = Hex nut
6 = Earth ground lead

10297FA

9 Attach the lug end of a 125-inch power supply cable to the positive terminal on the power supply (Figure 26).

Use a 7/16-inch hex wrench to fasten the hardware in the correct order.

Figure 26 Attaching the positive lead

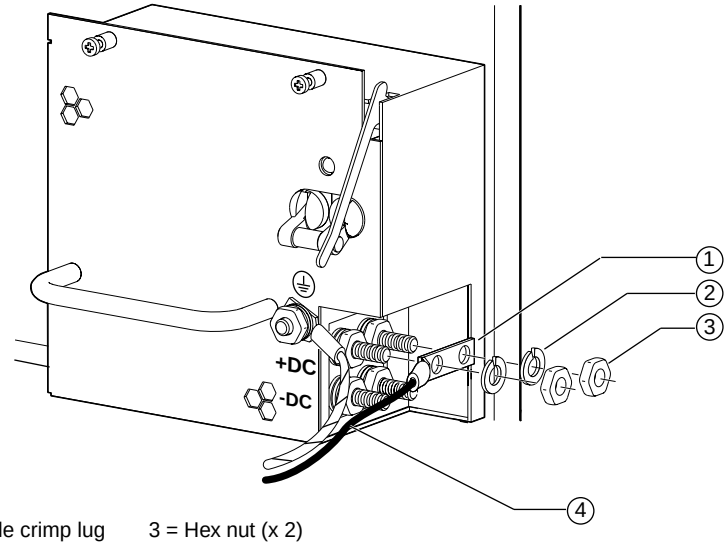

1 = Two-hole crimp lug
2 = Lock washer (x 2)
3 = Hex nut (x 2)
4 = Positive lead wire

10429FA

10 Attach the lug end of a 125-inch power supply cable to the negative terminal on the power supply (Figure 27).

Use a 7/16-inch hex wrench to fasten the hardware in the correct order.

Figure 27 Attaching the negative lead

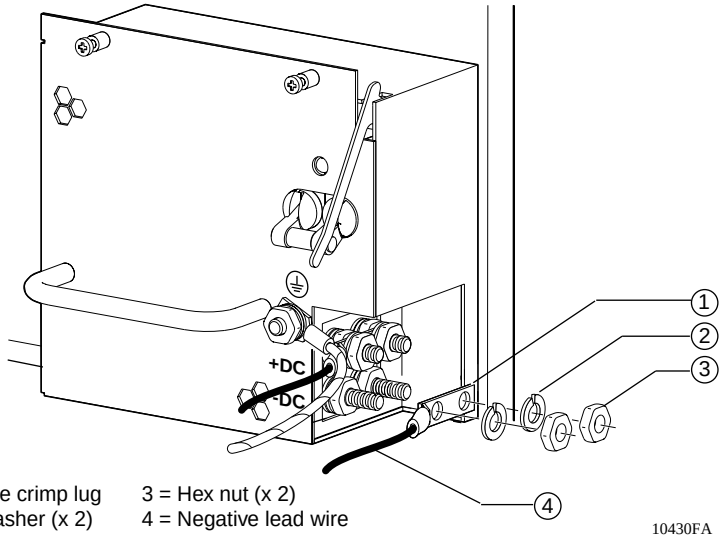

1 = Two-hole crimp lug
2 = Lock washer (x 2)
3 = Hex nut (x 2)
4 = Negative lead wire

11 Replace the plastic safety cover on the power supply (Figure 28).

Figure 28 Replacing the plastic safety cover on the power supply

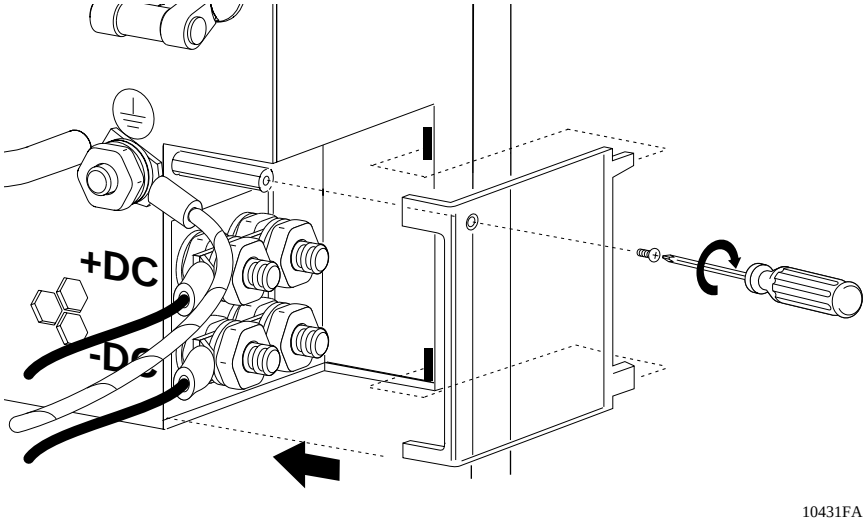

12 Secure the power supply in bay 1 of the lower chassis (Figure 29).

a Use the power supply handle to push the power supply firmly into bay 1.

b Push the extractor lever down to lock the power supply in place.

c Tighten the two power supply retaining screws.

Figure 29 Replacing the power supply

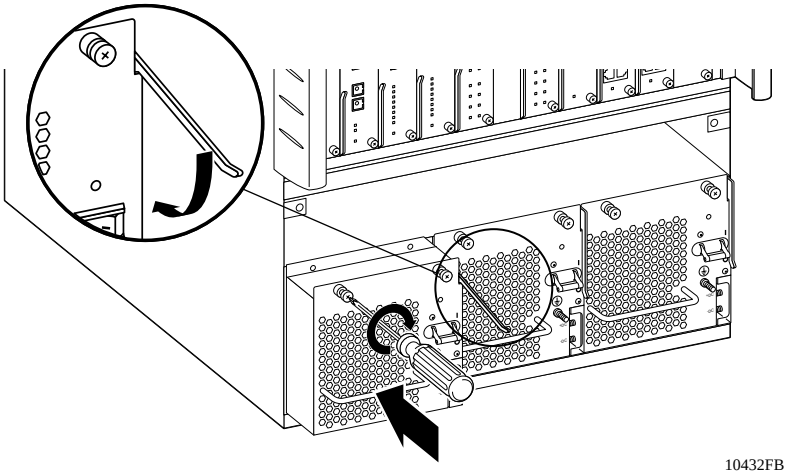

13 Perform steps 3 through 12 for each power supply in the system configuration, including the upper shelf chassis, if installed.

Use the shorter, 90-inch power cables for upper shelf power supplies.

14 After all power supplies are cabled, go to the next section,"Routing power supply cables to the BIP."

Routing power supply cables to the BIP

After you connect all cables to the chassis power supplies, you must route the power supply cable leads from each chassis to the BIP. If you installed an upper and lower shelf chassis, and each chassis has three power supplies, you have 18 separate cables to route to the BIP. For this reason, Nortel Networks recommends that you label the cables and loosely bundle and fasten them with tie-wraps along the path.

To route the cables to the BIP:

1 Label the unconnected ends of the cable leads for each power supply according to their destination on the BIP (Figure 30).

Figure 30 shows an example of one set of power supply cables for a power supply that is located in bay 1 of the upper shelf chassis. The cables were preassembled with the appropriate crimp lugs.

Be sure to label the cable leads appropriately for the power supplies in both the upper and lower shelves.

Figure 30 Labeling cables for the BIP

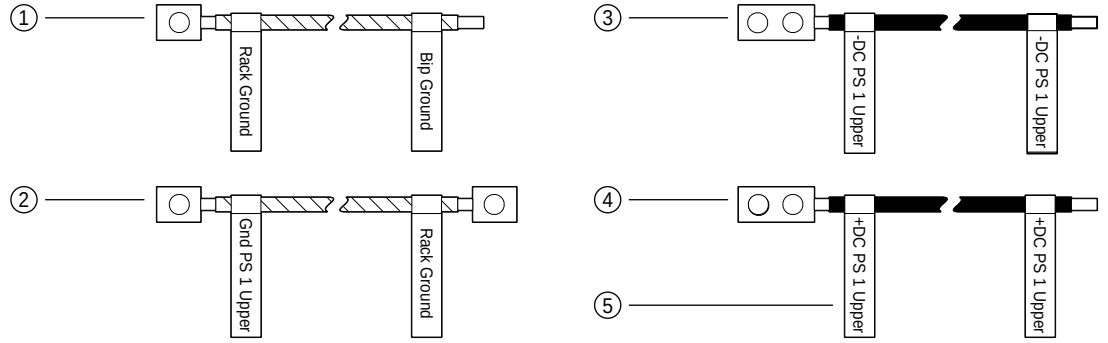

1 = BIP ground cable (x 1)
2 = Power supply ground cable (x 6)

3 = Power supply negative lead cable (x 6)
4 = Power supply positive lead cable (x 6)
5 = Label tags (optional, use as required)

10411EB

2 Use tie-wraps or cable ties to loosely bundle the cable leads for each power supply into a single manageable cable.

3 Route the bundled cables under each chassis to the back of the rack.

4 Separate the green (with yellow stripe) ground cable leads from the bundled cables, and route them to the base of the rack.

5 Route the remaining (black) power supply cables from the back of the lower and upper shelf chassis to the back panel of the BIP, loosely fastening them with tie-wraps along the path.

6 Loosely support the power supply cables with tie-wraps above the BIP power terminal block.

7 Proceed to, "Connecting the ground cables to the rack grounding strip."

Connecting the ground cables to the rack grounding strip

To connect the power supply ground cables to the rack grounding strip:

1 Locate the rack grounding strip at the back base of the rack (Figure 31).

Note: Figure 31 shows an example of a rack grounding strip. Your rack grounding strip may look different than the one shown in this example.

2 Attach the lug ends of the power supply ground cables to the rack grounding strip (Figure 31).

Use a 7/16-inch hex wrench to fasten the hardware in the correct order.

Figure 31 Rack grounding strip example

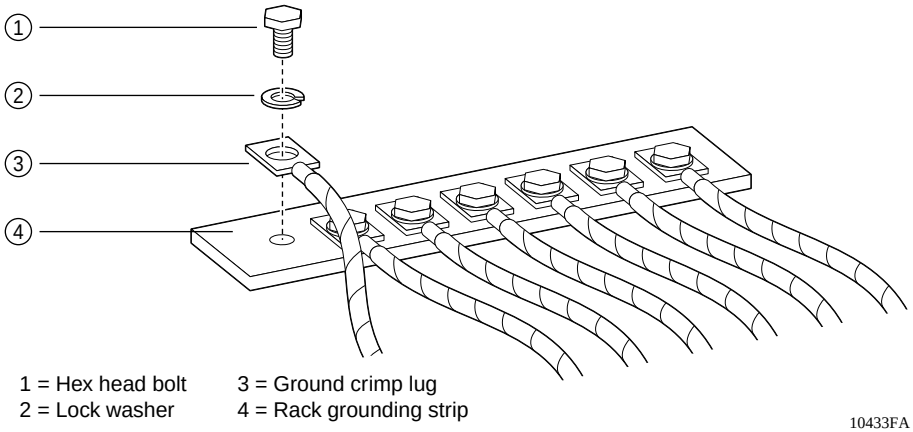

3 Proceed to, "Connecting the power supply cables to the BIP."

Connecting the power supply cables to the BIP

To connect the power supply cables to the BIP:

1. Locate one of the power supply cables.
2. Match the labeled tag on the power supply cable with the correct location on the power terminal block (Figure 32).

   The power terminal block label indicates a location for the positive and negative power supply leads for both the upper shelf and lower shelf power supplies.
3. Loosen the appropriate power terminal block screw, and then insert the cable lead (item 1 in Figure 32). Tighten the screw securely.

   Item 2 in Figure 32 shows the negative cable lead from power supply 1 in the upper shelf correctly connected to the power terminal block.

Figure 32 Attaching power supply cable leads to the BIP

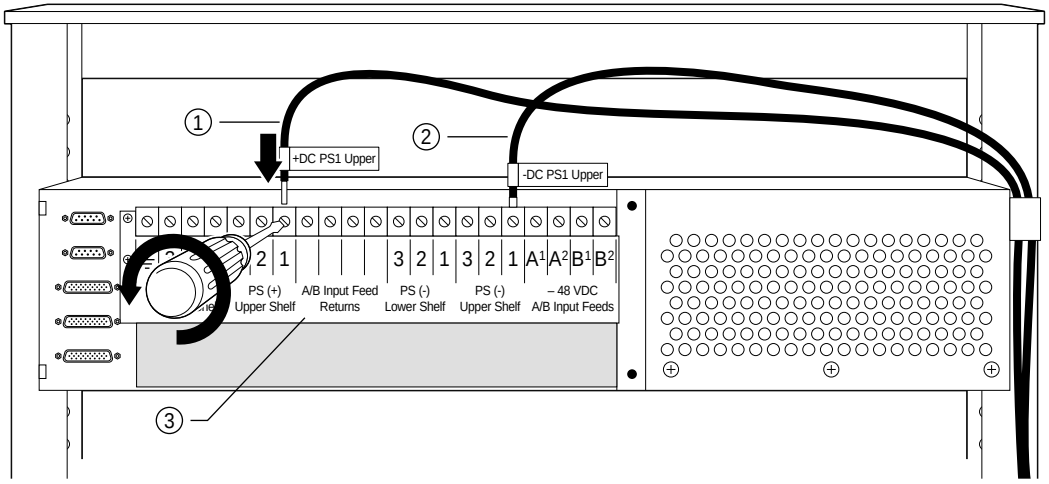

1 = Positive lead wire from power supply 1, upper shelf
2 = Negative lead wire from power supply 1, upper shelf
3 = Power terminal block label

10393FA

4 Repeat steps 1 through 3 for each remaining power supply in your configuration (Figure 33).

Figure 33 Upper and lower shelf power cables connected to the BIP

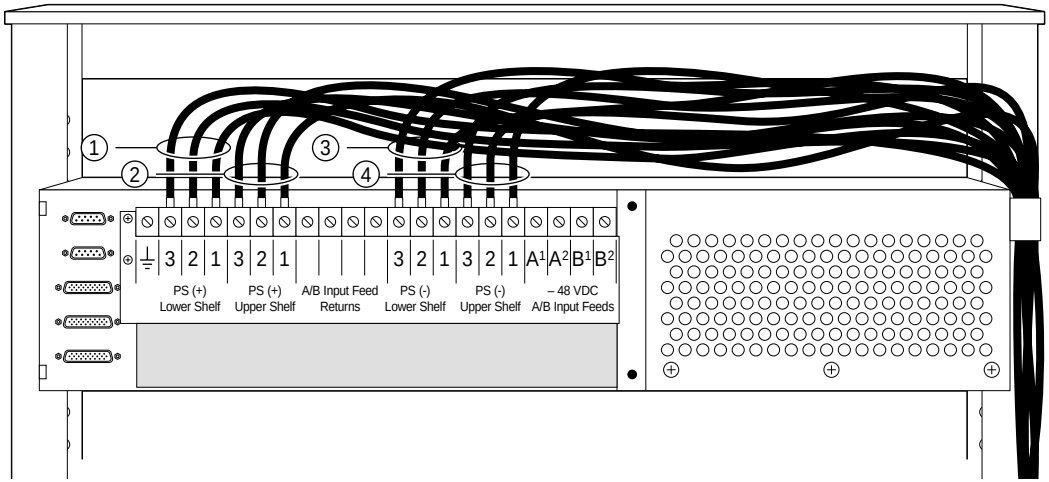

1 = Positive lead wires (lower shelf power supplies)
2 = Positive lead wires (upper shelf power supplies)
3 = Negative lead wires (lower shelf power supplies)
4 = Negative lead wires (upper shelf power supplies)

10394FA

5 Locate the BIP ground cable (see Figure 30 on page 45).

6 Attach one end of the BIP ground cable to the power terminal block (Figure 34).

a Loosen the power terminal block screw just enough to insert the ground cable lead (item 1 in Figure 34).

b Insert the lead and tighten the screw securely.

Figure 34 Attaching the BIP ground cable

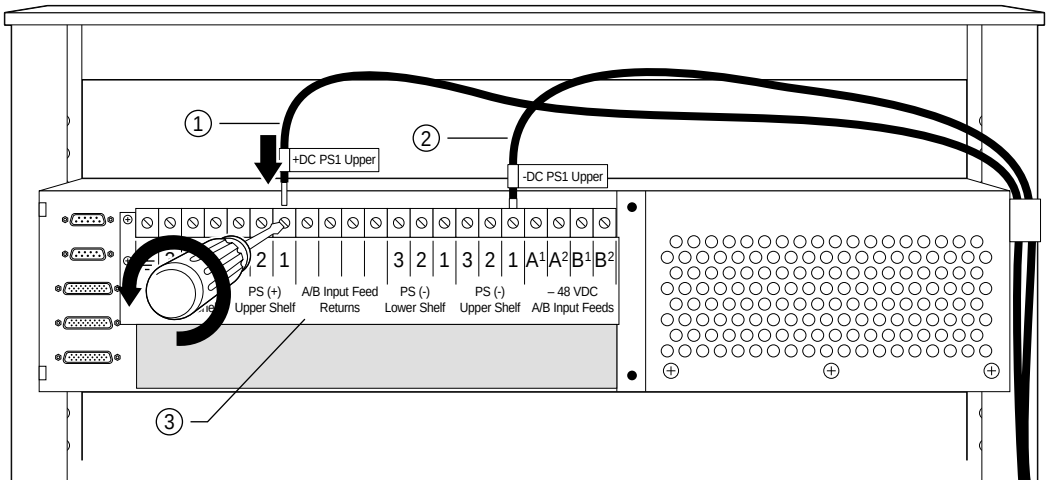

1 = Positive lead wire from power supply 1, upper shelf

3 = Power terminal block label

7 Route the other end of the BIP ground cable to the rack grounding strip near the base of the rack (see Figure 31 on page 46).

Use a 7/16-inch hex wrench to fasten the hardware in the correct order.

8 Go to the next section, "Connecting DC input power feeds to the BIP."

Connecting DC input power feeds to the BIP

Danger: Due to high-energy hazards, only qualified service personnel are permitted to connect the BIP to the DC power source.

Warning: Make sure that the DC power source is off or disconnected on the remote end before you perform any of the steps in this section. You may need to switch a circuit breaker off or turn off power at the DC input source.

Nortel Networks does not supply the cables for connecting the breaker interface panel to the DC input power source. You must select cables that comply with the electrical code of the country where you intend to use the DC-DC power supply.

Caution: As the installer, you have the sole responsibility for ensuring that the connection cable used with the breaker interface panel is appropriate for use with the DC power source to which the power supply is connected. Consider gauge, flammability, and mechanical serviceability when determining which cables to use.

You can connect up to two “A” feeds and two “B” feeds to your 8010co Chassis configuration for redundancy. Each chassis can require up to 60 A service for maximum operating power.

As shown in Figure 35, the primary B feed (B^1) provides redundancy for the primary A feed (A^1), and the secondary B feed (B^2) provides redundancy for the secondary A feed (A^2).

Note: An *optional* third power supply in the chassis provides redundancy and high-availability operation. In the same way, the BIP provides redundancy and high-availability operation by allowing two additional “B” feeds to provide redundancy for single or dual chassis installations.

Figure 35 A and B feed example

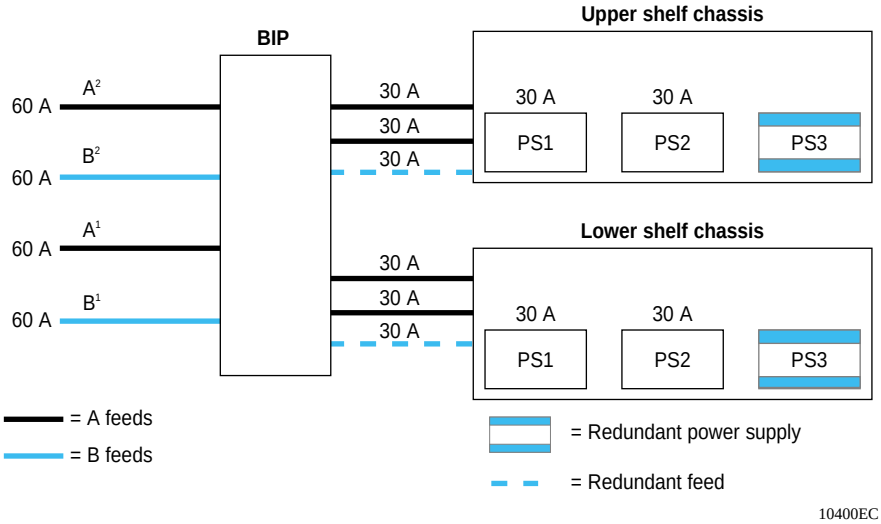

Table 3 lists input power options for single and dual chassis installations.

Table 3 Single chassis and dual chassis input options

	Single chassis input*	**Dual chassis input**
Non-redundant input power	A^1	A^1 and A^2
Redundant input power	A^1 and B^1	A^1 and B^1, A^2 and B^2

* For a single chassis installation, always install the chassis in the lower shelf position to stabilize the rack.

To connect the DC input feeds to the BIP:

1 Locate the DC power source for the DC input feed.

Warning: Make sure that the DC power source is off or disconnected on the remote end before you perform any of the steps in this section. You may need to switch a circuit breaker off or turn off power at the DC input source.

2 Determine the power requirements for your configuration (see Figure 35 on page 51).

3 Locate the A and B -48 VDC input feeds (Figure 36).

Note: Figure 36 shows an example of a site DC input conduit. Your DC input conduit may look different or may be in a different location than the one shown in the following examples.

The -48 VDC input feed cables should be tagged with source labels (for example, -48 VDC Input feed or -48 VDC Return). If they are not labeled, and you are not sure of the source, ask for assistance from a qualified electrician.

Figure 36 Locating the A and B -48 VDC input feeds

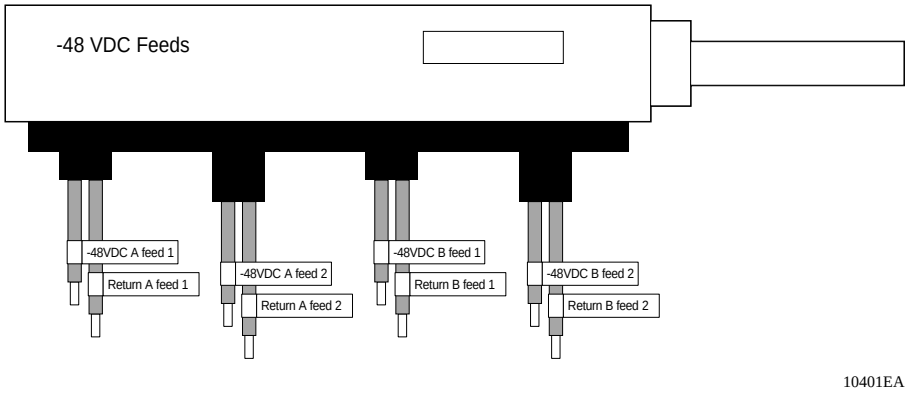

4 Connect the -48 VDC input feeds according to your configuration requirements.

a Match the tagged -48 VDC input feed cable lead with the correct power terminal block on the back of the BIP (Figure 37).

a Loosen the power terminal block screw just enough to insert the cable lead (item 1 in Figure 37).

b Insert the lead and tighten the screw securely.

Figure 37 Connecting the A and B -48 VDC input feeds to the BIP (1 of 2)

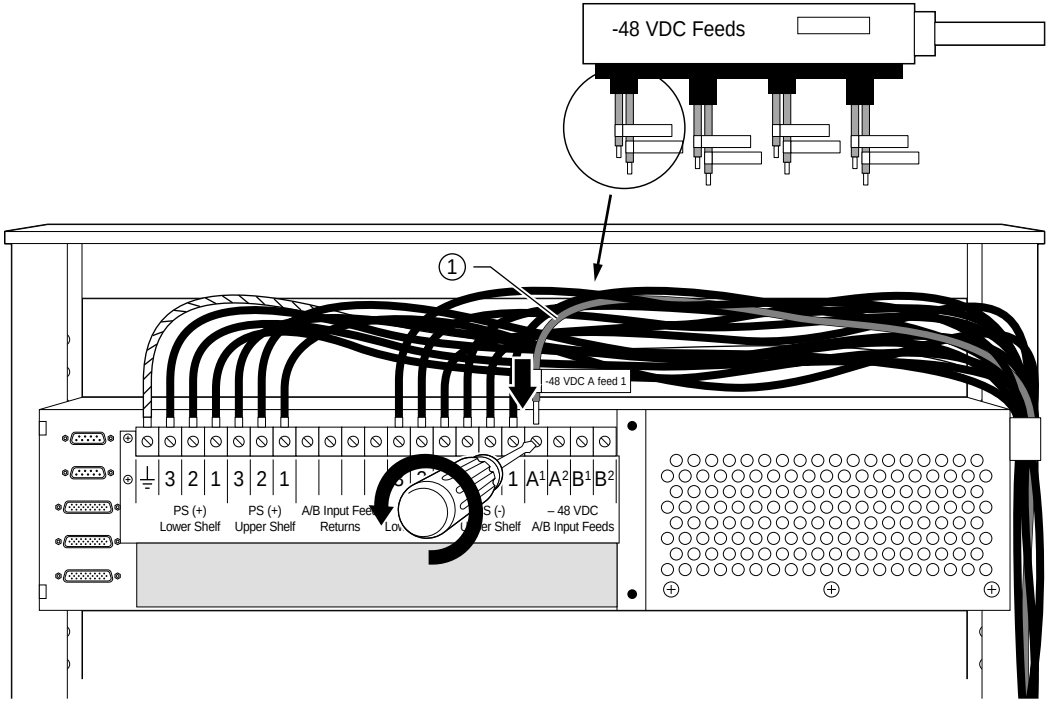

1 = -48 VDC input feed (Primary A feed)

10406FA

5 Connect the remaining -48 VDC input feeds and returns as required (Figure 38).

Note: Figure 38 shows the attachment of two “A” feeds and two “B” feeds to the BIP. Note that there is a primary and a secondary A feed, as well as a primary and secondary B feed (see Figure 35 on page 51 for configuration details).

Figure 38 Connecting the A and B -48 VDC input feeds to the BIP (2 of 2)

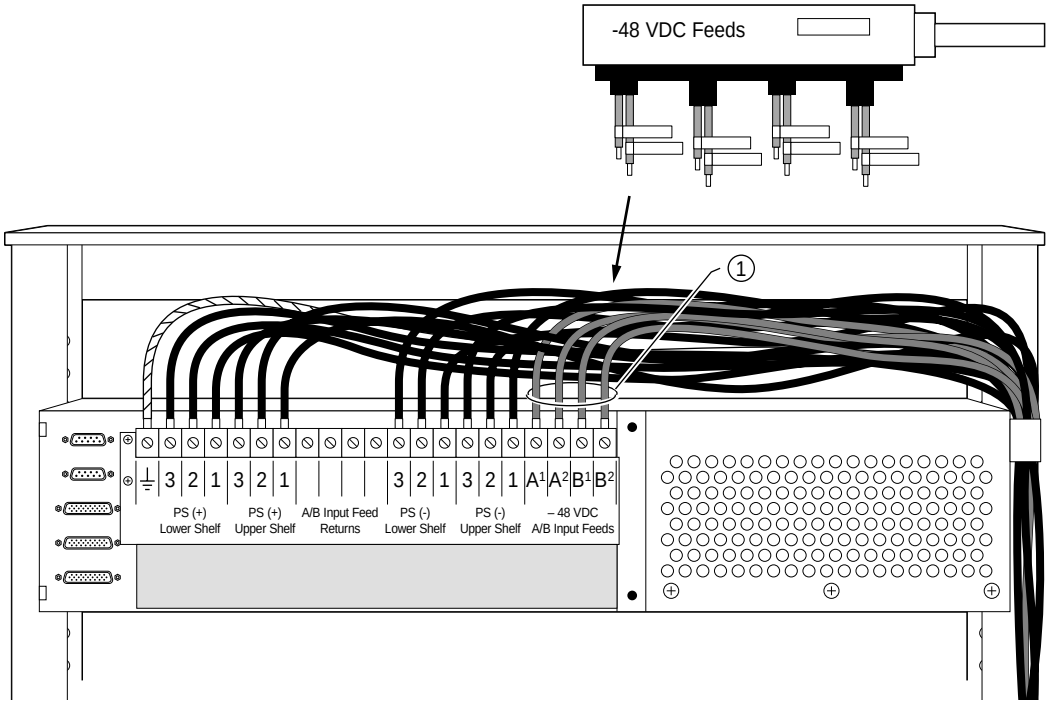

1 = -48 VDC input feeds (Primary A, Secondary A, Primary B, Secondary B)

10407FA

6 Connect the A/B input feed returns.

Note: The total number (quantity) of Input feed return cable leads must match the total number of Input feeds used for your installation.

a Locate the A/B Input Feed Returns section of the power terminal block.

b Loosen one of the four available A/B input feed return connection screws just enough to insert the cable lead (item 1 in Figure 39).

You can use any of the four available input feed return connections.

c Insert the lead and tighten the screw securely.

Figure 39 Connecting the A/B input feed returns (1 of 2)

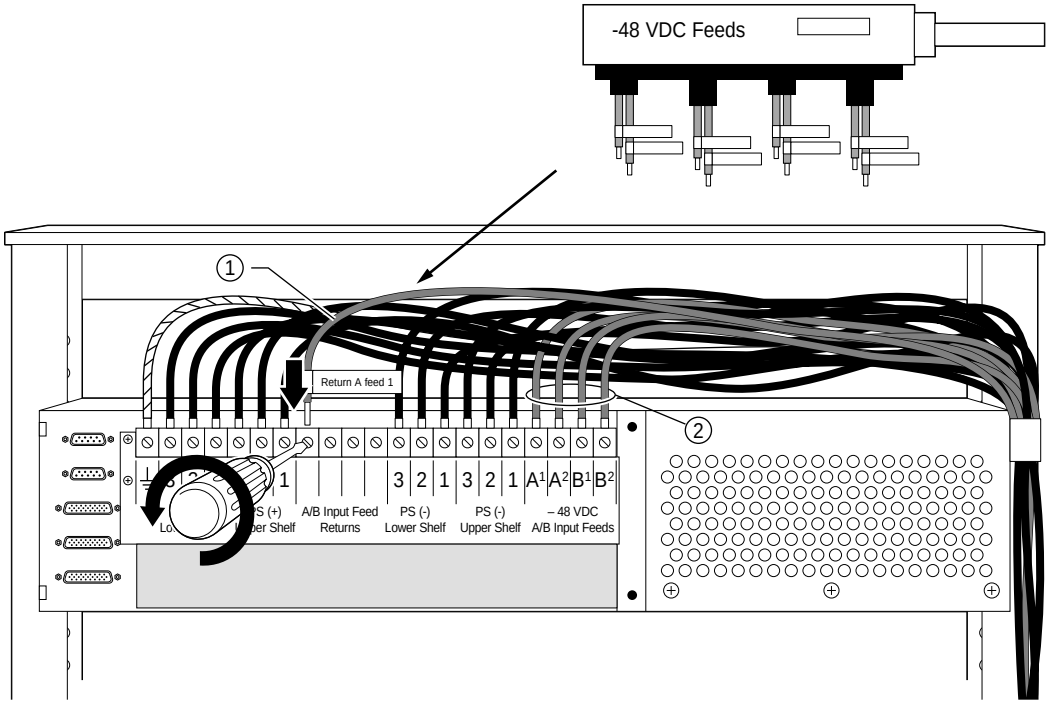

1 = -48 VDC input feed Return (Primary A feed Return)
2 = -48 VDC input feeds (Primary A, Secondary A, Primary B, Secondary B)

10408FA

7 Connect the remaining -48 VDC input returns as required (Figure 40).

Figure 40 shows the BIP with all power cables and returns installed.

Note: Be sure to properly support the cables with cable ties to avoid undue stress to the power terminal block.

Figure 40 Connecting the A/B input feed returns (2 of 2)

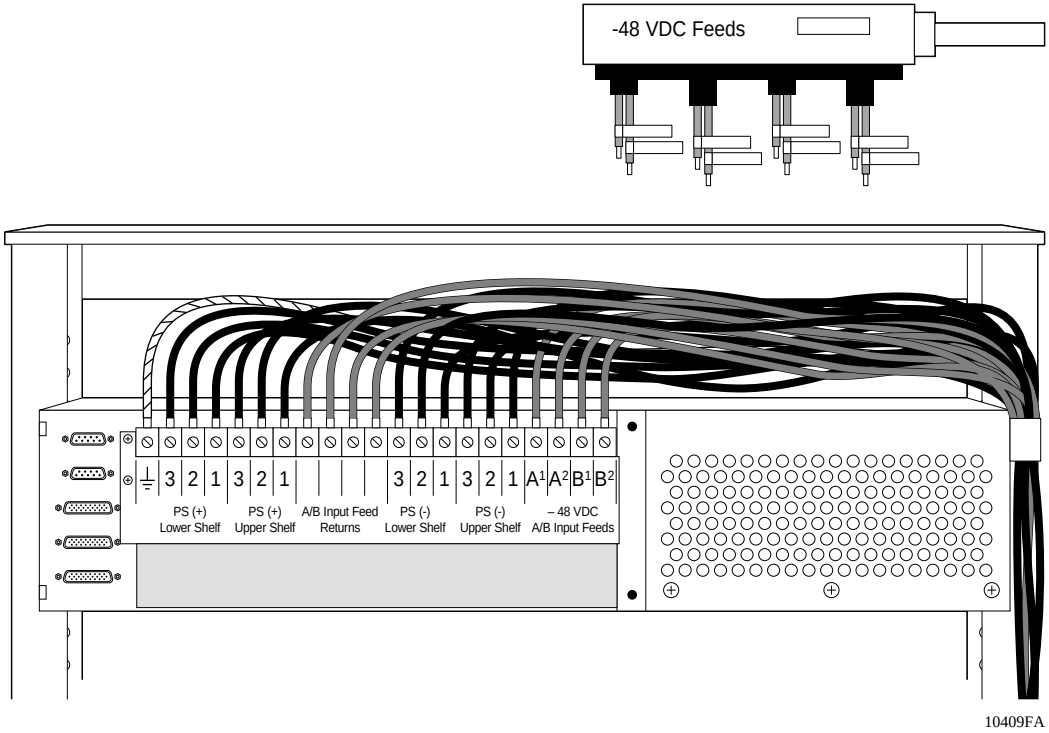

8 Go to the next section, "Replacing covers."

Replacing covers

After you complete all of the cabling requirements as described in the previous sections, you must replace the plastic back cover on the BIP and the 8010co Chassis bezel(s) that were removed earlier in these procedures.

Before you replace the covers and bezels, be sure that all cables are routed properly from under the chassis bays, through the rack, and up to the BIP power terminal block. Check that all tie-wraps are secured, and give special attention to the cables at the power terminal strip; the cable leads must be supported to avoid undue stress on the terminal block.

1 Replace the plastic back cover on the BIP (Figure 41).

Figure 41 Replacing the plastic back cover on the BIP

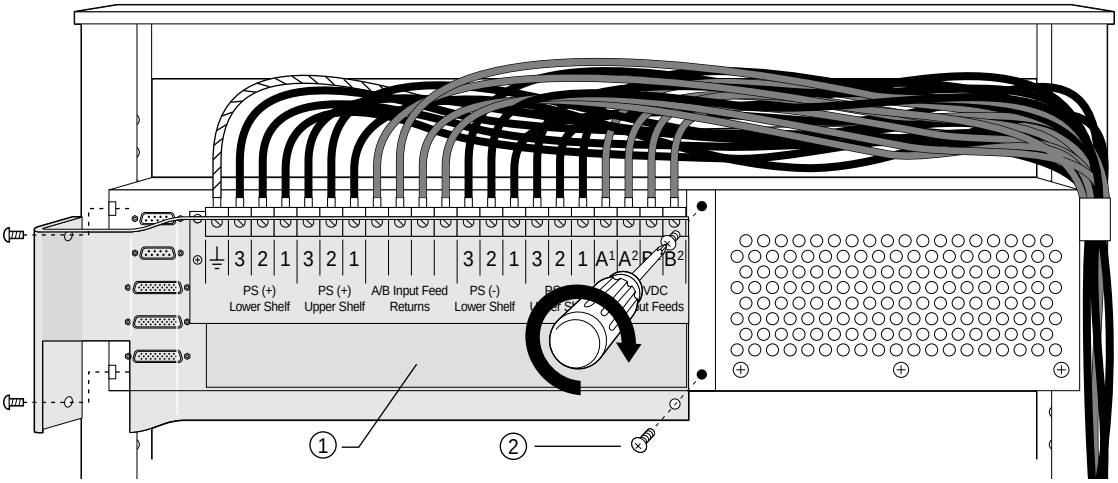

1 = Back cover (plastic)
2 = Cover screws (x 4)

10410FA

2 Replace the 8010co Chassis bezel.

a Set the notch (on both ends of the bezel) into the tabs on the chassis (Figure 42).

b Lift the top of the bezel up, and then align the captive screws with the holes in the chassis.

c Using a Phillips screwdriver, tighten the 2 captive screws to secure the bezel to the chassis.

d Replace the bezel on the second chassis, if installed.

Figure 42 Replacing the 8010co Chassis bezel

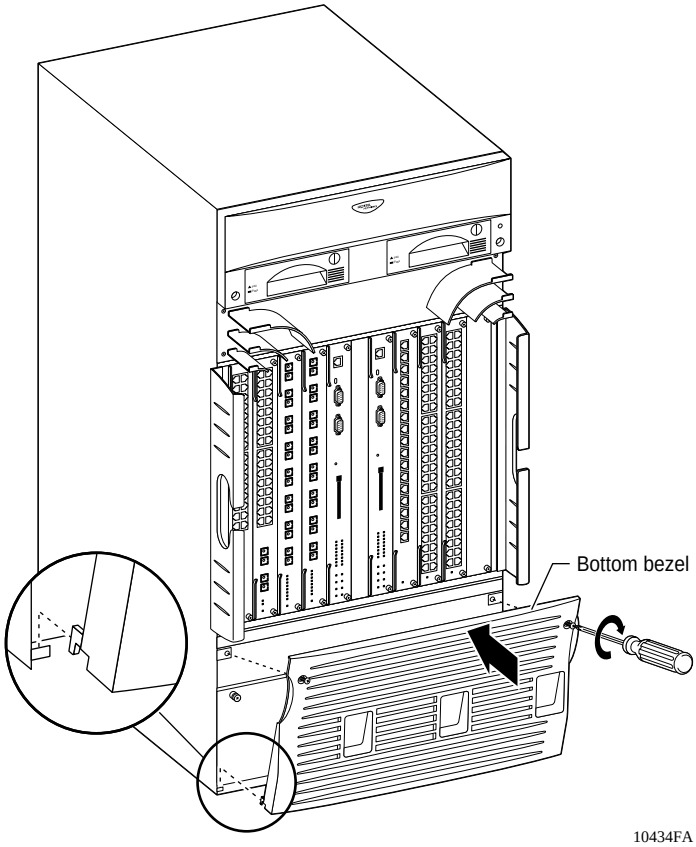

3 Go to the next section, "Installing shelf alarm cables."

Installing shelf alarm cables

Note: The BIP ships from the factory with default alarm configurations set for a single chassis in the lower shelf of the rack. If you install a second chassis, you must configure the jumpers on the alarm module to support that configuration. See “Accessing the alarm module” on page 28 if you need to modify the shelf alarm jumpers.

1 To install the shelf alarm cable for a single chassis in the lower shelf:

- **a** Locate the shelf alarm cables in the shipping container.
- **b** Connect one end of the shelf alarm cable to the J2 connector on the back of the BIP (Figure 43).
- **c** Connect the other end of the shelf alarm cable to the lower shelf chassis alarm connector, on the lower shelf chassis.

Figure 43 Installing shelf alarm cables

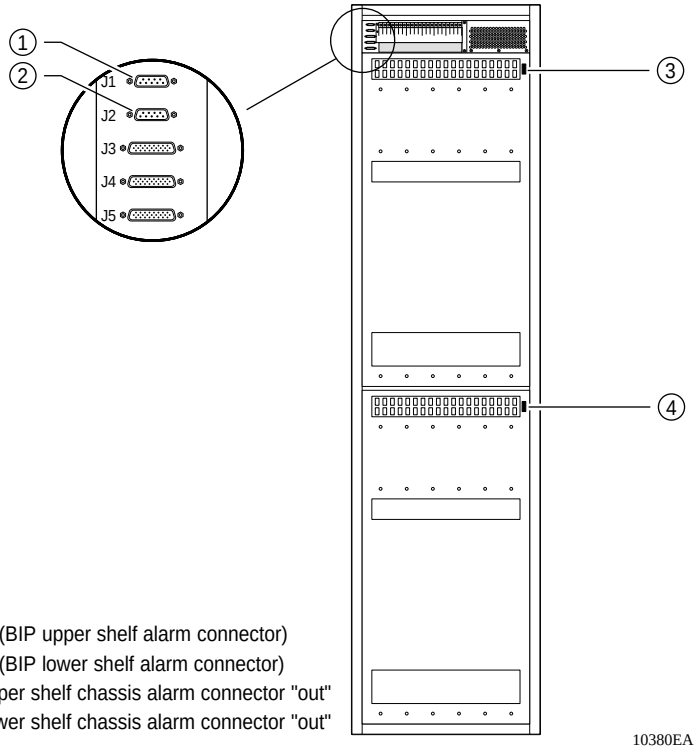

1 = J1 (BIP upper shelf alarm connector)
2 = J2 (BIP lower shelf alarm connector)
3 = Upper shelf chassis alarm connector "out"
4 = Lower shelf chassis alarm connector "out"

2 To install the shelf alarm cable for a second chassis in the upper shelf:

a Configure the jumpers on the alarm module to support a second chassis in the upper shelf as described in "Accessing the alarm module" on page 28.

b Connect one end of the shelf alarm cable to the J1 connector on the back of the BIP (Figure 43).

c Connect the other end of the shelf alarm cable to the upper shelf chassis alarm connector, on the upper shelf chassis.

After successfully installing the shelf alarm cables, go to the next section "Verifying the installation."

Verifying the installation

This section describes how to verify the BIP hardware installation. It includes the following topics:

- "Initial power-up," next
- "Verifying the LEDs" on page 61
- "Powering off the system" on page 62

Before powering up the system to verify the installation, be sure that:

- All cables are installed and properly secured.
- All safety covers, filler panels, and bezels are installed and secure.
- All tools and installation materials are removed.
- You notify others working in the area that the system power is about to be turned on.

Initial power-up

Danger: Due to high-energy hazards, only qualified service personnel are permitted to connect the BIP to the DC power source.

To power up the 8010co Chassis:

1. Set the six circuit breakers on the BIP front panel to the off position (O = Off).
2. Set the switches for all power supplies in the upper and lower chassis to the off position (O = Off).

   You can access the power supply switches with the bezels installed.
3. Turn on the input feed power at the DC power source.

Verifying the LEDs

1. Verify the following LEDs on the BIP:
   - The (white) POWER Indicator on the BIP front panel is on.
   - The (green) shelf alarm cable validation LED is on steady.

     The green shelf alarm cable validation LED indicates that the shelf alarm cables are installed properly.

     (If there is a problem with the shelf alarm cable installation or jumper settings, the red shelf alarm cable *fault* LED will turn on.)
2. Set the six circuit breakers on the BIP front panel to the on position (| = On).
3. Set the switches for all power supplies in the upper and lower chassis to the on position (| = On).

Note: When you first install a 8010co Chassis that contains two or three power supplies, you must turn on two of the power supply units simultaneously. If you wait longer to turn on the second power supply, one of the power supplies could shut down. To correct this condition, turn off both power supplies, wait at least 30 seconds, and then turn on both power supplies again simultaneously.

4 Verify the following LEDs on the 8010co Chassis:

— The (green) power supply LEDs for each power supply in both the upper and lower chassis are on.

(If any of the power supply LEDs are not on, replace the power supply.)

— The chassis fans are powering up.

If any of the above steps indicate a problem with the installation, do the following:

1 Set the switches for all power supplies in the upper and lower chassis to the off position (O = Off).

2 Set the six circuit breakers on the BIP front panel to the off position (O = Off).

3 Check that all cables are installed properly, and that all power supplies are firmly seated in their bays.

4 Set the six circuit breakers on the BIP front panel to the on position (| = On).

5 Set the switches for all power supplies in the upper and lower chassis to the on position (| = On).

6 Proceed to "Verifying the LEDs" on page 61.

If the problem persists, go to Chapter 3, "Problem solving," on page 65.

Powering off the system

To power off the system:

1 Set the switches for all power supplies in the upper and lower chassis to the off position (O = Off).

You can access the power supply switches with the bezels installed.

2 Set the six circuit breakers on the BIP front panel to the off position (O = Off).

3 Turn off the input feed power at the DC power source.

Warning: Make sure the DC power source is off or disconnected. You may need to switch a circuit breaker off or turn off power at the DC input source. Be sure that the DC input source power is locked out and tagged.

Note: When you power off the 8010co chassis, wait at least 30 seconds before turning the power supplies back on.

4 Continue with the installation of the 8010co Chassis as described in the appropriate product chassis installation manual.

Chapter 3
Problem solving

This chapter describes how to isolate and diagnose problems with your breaker interface panel and associated 8010co Chassis.

This chapter covers the following topics:

- "Interpreting the LEDs" (next)
- "Diagnosing and correcting the problem" on page 68
- "Corrective actions" on page 69

The topics lead you through a logical process for troubleshooting the BIP and the associated 8010co Chassis components. The BIP LEDs provide visual indications of problems that can occur with the 8010co Chassis and installed components, as well as system status during normal operations.

To become familiar with the various states that the LEDs can exhibit during normal operation, go to the next section, "Interpreting the LEDs."

For help in determining a problem, go to "Diagnosing and correcting the problem" on page 68. That section describes symptoms and corrective actions you can perform to resolve specific problems.

If the corrective actions determine that a chassis component needs replacing, see the appropriate product chassis installation manual for replacement and removal procedures.

If you still have problems with your system after completing the instructions in this chapter, contact the Nortel Networks Technical Solutions Center.

Interpreting the LEDs

All BIP LEDs and indicators are located on the front panel (Figure 44).

Figure 44 BIP LEDs and indicators

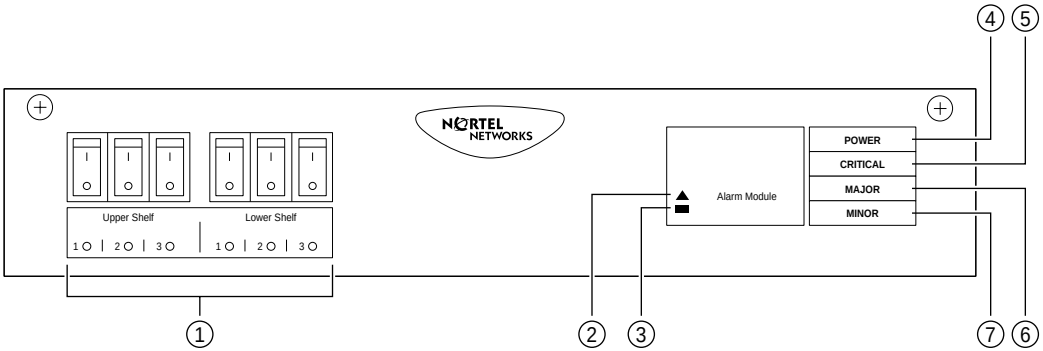

1 = Shelf circuit breakers LEDs
2 = Shelf alarm cable fault LED
3 = Shelf alarm cable validation LED
4 = POWER indicator
5 = CRITICAL fault indicator
6 = MAJOR fault indicator
7 = MINOR fault indicator

10435EB

Table 4 describes the BIP LEDs and indicators.

Table 4 BIP LEDs and indicators

Item	Label/Icon	Type	Color/State	Description
1	Upper Shelf/ Lower Shelf	LED	Red/On steady	Circuit breaker LEDs (for upper shelf and lower shelf power supplies)—Indicates that a circuit breaker has tripped due to an overcurrent condition with the associated power supply. This fault condition also lights the (red) MAJOR fault indicator (see MAJOR fault description in this table). No alarm is generated when a shelf circuit breaker is manually switched on (|) or off (O).
2	▲	LED	Red/On steady	Shelf alarm cable fault LED—The shelf alarm cables are missing, not secured, or the shelf alarm jumpers are not configured properly (see "Accessing the alarm module" on page 28). This fault condition also lights the MINOR fault indicator (see Minor fault description in this table).
3	▬	LED	Green/On steady	Shelf alarm cable validation LED —The shelf alarm cables are properly connected to the shelves.

Table 4 BIP LEDs and indicators (continued)

Item	Label/Icon	Type	Color/State	Description
4	POWER	Indicator	White/On steady	Power indicator—The external DC power is available to the BIP.
5	CRITICAL	Indicator	Red/On steady	Critical fault indicator—Indicates that a severe service-affecting condition has occurred that requires immediate corrective action. Common causes for this type of fault condition include: • Line card failure • Temperature fault • CPU fault when only one CPU is installed
6	MAJOR	Indicator	Red/On steady	Major fault indicator—Indicates that the system hardware or software has identified a serious disruption of service or that an important circuit failure has occurred. Common causes for this type of fault condition include: • CPU fault when two CPUs are installed • Two fan trays are faulty • A power supply circuit breaker has tripped due to an overcurrent condition • Two power supplies are faulty
7	MINOR	Indicator	Yellow/On steady	Minor fault indicator —Indicates a problem that does not have a serious effect on customer service, or a problem in circuits that are not essential to device operation. Common causes for this type of fault condition include: • Shelf alarm cables not installed or not connected properly. • Alarm module jumpers configured incorrectly. • One power supply is faulty • One fan tray is faulty

If you need more help, go to the next section, “Diagnosing and correcting the problem.”

Diagnosing and correcting the problem

Before you perform the problem-solving steps in this section, complete the following steps:

1. Set the switches for all power supplies in the upper and lower chassis to the off position (O = Off).
2. Set the six circuit breakers on the BIP front panel to the off position (O = Off).
3. Check that all cables are installed properly, and that all power supplies are firmly seated in their bays.
4. Set the six circuit breakers on the BIP front panel to the on position (| = On).
5. Set the switches for all power supplies in the upper and lower chassis to the on position (| = On).
6. Verify the following LEDs on the BIP:
   - The (white) POWER Indicator on the BIP front-panel is on.
   - The (green) shelf alarm cable validation LED is on steady.
7. Verify the following LEDs on the 8010co Chassis:
   - The (green) power supply LEDs for each power supply in both the upper and lower chassis are on.
   - The chassis fans are powering up.
8. If the problem still persists, go to the next section, “Corrective actions.”

Corrective actions

To resolve problems with the BIP or the 8010co Chassis and components, follow the corrective actions suggested in Table 5.

Table 5 Corrective actions

Symptom	Probable cause	Corrective action
The (red) shelf alarm cable fault LED on the BIP front panel is on, and the (yellow) MINOR indicator is on steady.	Shelf alarm cables are not installed or installed incorrectly.	Check to see that the shelf alarm cables are secure and installed correctly, see "Installing shelf alarm cables" on page 59."
	Shelf alarm jumpers not configured or configured incorrectly.	Check the shelf alarm jumper settings, see "Accessing the alarm module" on page 28."
The (yellow) MINOR indicator is on steady.	A single chassis fan tray is faulty.	Locate and replace the faulty chassis tray, see the appropriate product chassis installation manual.
	A single power supply is faulty.	Locate and replace the faulty power supply, see the appropriate product chassis installation manual.
The (red) MAJOR indicator is on steady.	Two chassis fan trays are faulty.	Locate and replace the faulty chassis trays. See the appropriate product chassis installation manual, for replacement and removal of system components.
	Two power supplies are faulty.	Locate and replace the faulty power supplies. See the appropriate product chassis installation manual, for replacement and removal of system components.
	An overcurrent condition has occurred with one or more power supplies.	This fault condition causes the associated circuit breaker(s) on the BIP front panel to trip, and also lights the circuit breaker LED. Locate and replace the faulty power supplies. See the appropriate product chassis installation manual, for replacement and removal of system components.
	The master CPU has failed and the second (redundant) CPU has taken over system operations.	Locate and replace the faulty CPU. See the appropriate product chassis installation manual, for replacement and removal of system components.

Table 5 Corrective actions (continued)

Symptom	Probable cause	Corrective action
The (red) CRITICAL indicator is on steady.	Failover from Master CPU to the second (redundant) CPU. This action is preceded by the CRITICAL indicator blinking two times and then turning off after the redundant CPU becomes operational.	After the Redundant CPU becomes operational, the (red) MAJOR indicator lights to indicate loss of the master CPU (see previous symptom above).
	The maximum CPU operating temperature, 50°C (122°F), has been exceeded.	Check to see that nothing is blocking the air flow to the CPU; if airflow is present, power down the system and replace the CPU. See the appropriate product chassis installation manual, for replacement and removal of system components.
	The CPU subsystem has detected a fault.	Locate and remove the faulty card. See the appropriate product chassis installation manual, for replacement and removal of system components.
	A line card is booting and is not yet operational.	Wait until the line card completes booting; the fault indicator will go out when booting is complete.
	A line card has failed.	Locate and hot swap the faulty line card. See the appropriate product chassis installation manual, for replacement and removal of system components.
A circuit breaker LED on the BIP front panel is on (red). The associated circuit breaker is tripped (off), and the (red) MAJOR indicator is on steady.	A circuit breaker has tripped due to an overcurrent condition with the associated power supply.	Locate and replace the faulty power supply. See the appropriate product chassis installation manual, for replacement and removal of system components.

Appendix A
Technical specifications

This appendix lists the technical specifications for the breaker interface panel.

This appendix covers the following topics:

- "Environmental" (next)
- "Electrical" on page 72
- "Physical dimensions" on page 72
- "Electromagnetic emissions" on page 72
- "Safety agency certification" on page 72

Environmental

Parameter	Operating Specification	Storage Specification
Temperature	-5° to 55°C (23° to 131°F)	-50° to 70°C (-58° to 158°F)
Humidity	85% maximum relative humidity, noncondensing	85% maximum relative humidity, noncondensing
Altitude	1800 m (5,940 ft)	1800 m (5,940 ft)

Electrical

Parameter	Specifications
Input Voltage (Nominal)	-48/-60 VDC
Input Voltage Range	-40 VDC to -75 VDC
Input Current	60 A per DC input feed
Output Current	30 A per DC output feed

Physical dimensions

Parameter	Specifications
Height	12.6 cm (4.92 in.)
Width	50 cm (19.5 in.)
Depth	39.0 cm (15.2 in.)
Weight	15.4 kg (33.9 lb)

Electromagnetic emissions

- Bellcore GR-1089-CORE
- EN50082 (CISPR 22)
- ETSI 300 386-2

Safety agency certification

- UL Listed (UL 1950)
- Bellcore GR-1089-CORE
- CSA C22.2 No. 950
- EN 60950 and EN 41003

Appendix B
BIP external cable pin assignments

This appendix describes the breaker interface panel connectors.

This appendix covers the following topics:

- "Shelf alarm connectors (J1 and J2)," next
- "Office alarm connectors (J3 and J4)" on page 75
- "Standalone office alarm connector (J5)" on page 77

Shelf alarm connectors (J1 and J2)

The BIP shelf alarm connectors (J1 and J2) use standard 9-pin D-sub connectors (Figure 45).

Figure 45 J1 and J2 9-pin standard D-sub connector

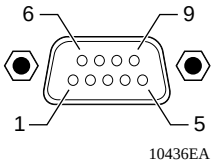

Figure 46 shows the pinouts for the J1 and J2 shelf alarm connectors.

Figure 46 J1 and J2 shelf alarm connector pinouts

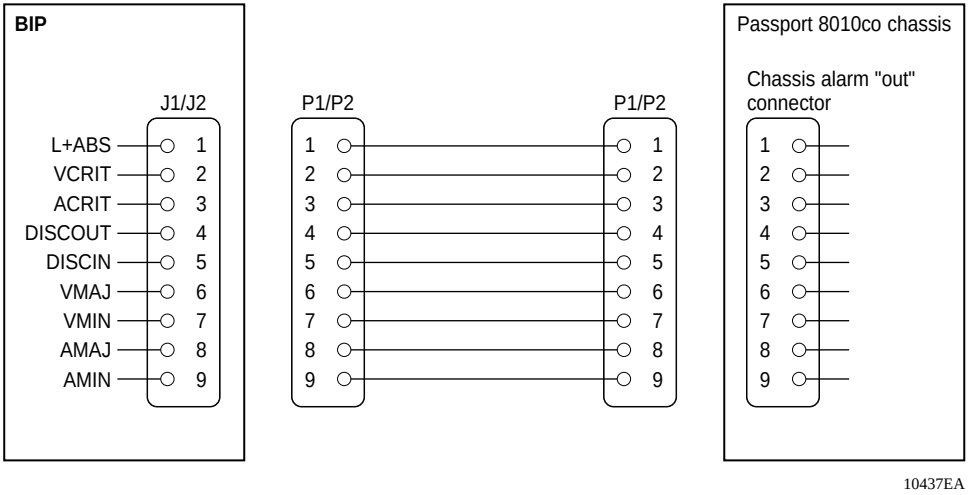

Table 6 lists the pin assignments for the J1 and J2 shelf alarm connectors.

Table 6 J1 and J2 shelf alarm connector pin assignments

Pin	Signal	Description
1	L+ABS	Alarm battery supply return.
2	VCRIT	Visual critical alarm.
3	ACRIT	Audible critical alarm.
4	DISCOUT	Indicates presence of shelf alarm cable.
5	DISCIN	Indicates presence of shelf alarm cable.
6	VMAJ	Visual major alarm.
7	VMIN	Visual minor alarm.
8	AMAJ	Audible major alarm.
9	AMIN	Audible minor alarm

Office alarm connectors (J3 and J4)

The BIP office alarm connectors (J3 and J4) use high-density, 26-pin D-sub connectors (Figure 47).

Figure 47 J3 and J4 high-density 26-pin D-sub connector

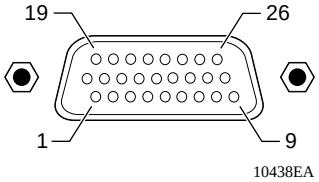

Figure 48 shows the pinouts for the J3 and J4 office alarm connectors.

Figure 48 J3 and J4 office alarm connectors

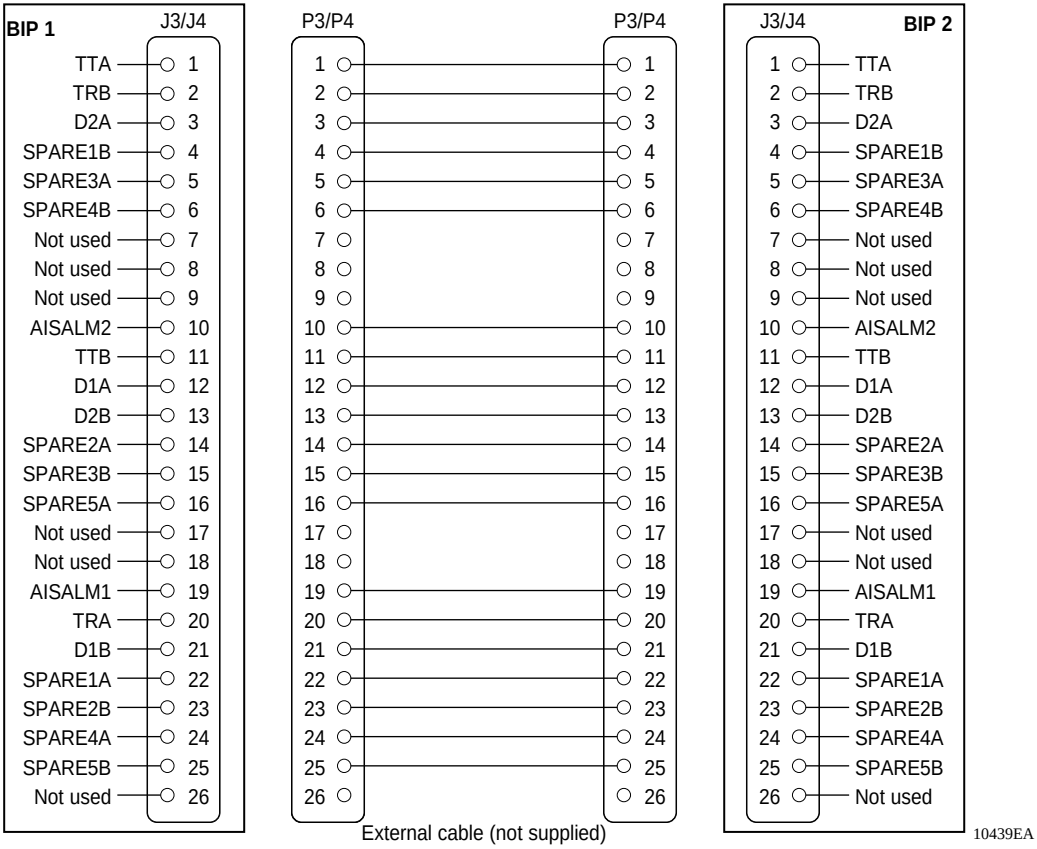

Table 7 lists the pin assignments for the J3 and J4 office alarm connectors.

Table 7 J3 and J4 office alarm connector pin assignments

Pin	Signal	Description
1	TTA	Voice communications from telephone jacks.
2	TRB	Voice communications from telephone jacks.
3	D2A	Data communications from Data jacks.
4	SPARE1B	Signal provided for office alarm connectivity.
5	SPARE3A	Signal provided for office alarm connectivity.
6	SPARE4B	Signal provided for office alarm connectivity.
10	AISALM2	Normally open from relay. Switches to AISALM1 on aisle alarm (Followme) activation.
11	TTB	Voice communication from telephone jacks.
12	D1A	Data communication from DATA jacks.
13	D2B	Data communication from DATA jacks.
14	SPARE2A	Signal provided for office alarm connectivity.
15	SPARE3B	Signal provided for office alarm connectivity.
16	SPARE5A	Signal provided for office alarm connectivity.
19	AISALM1	Tied to BR externally at office alarm cross connect panel.
20	TRA	Voice communication from telephone jacks.
21	D1B	Data communication from DATA jacks.
22	SPARE1A	Signal provided for office alarm connectivity.
23	SPARE2B	Signal provided for office alarm connectivity.
24	SPARE4A	Signal provided for office alarm connectivity.
25	SPARE5B	Signal provided for office alarm connectivity.

Standalone office alarm connector (J5)

The standalone office alarm connectors (J5) uses a high-density, 26-pin D-sub connector (Figure 49).

Figure 49 J5 high-density 26-pin D-sub connector

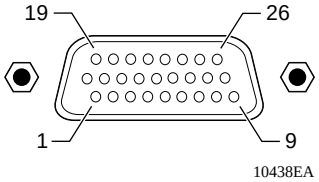

Figure 50 shows the pinouts for the J5 standalone office alarm connector.

Figure 50 J5 standalone office alarm connector

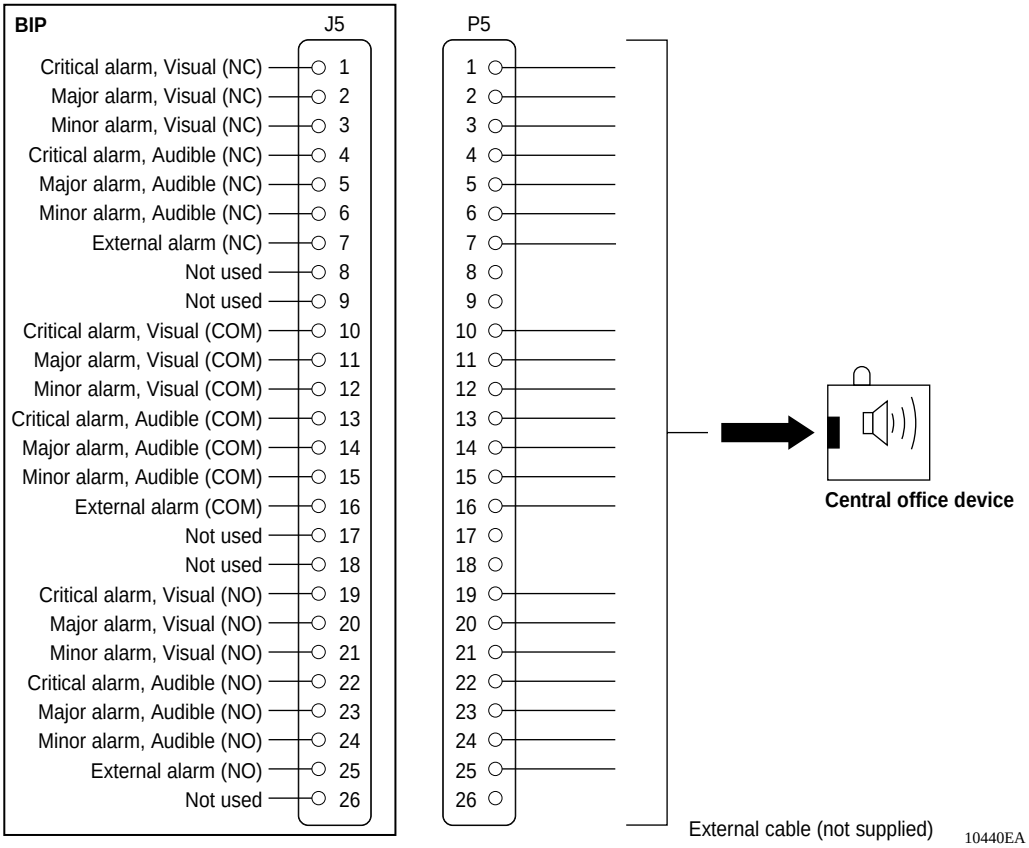

Table 8 lists the pin assignments for the J5 standalone office alarm connector.

Table 8 J5 standalone office alarm connector pin assignments

Pin	Signal	Description
1	Critical alarm—Visual (NC)	Visual alarm contact
2	Major alarm—Visual (NC)	Visual alarm contact
3	Minor alarm—Visual (NC	Visual alarm contact
4	Critical alarm—Audible (NC)	Audible alarm contact
5	Major alarm—Audible (NC)	Audible alarm contact
6	Minor alarm—Audible (NC)	Audible alarm contact
7	External alarm—(NC)	External alarm contact
10	Critical alarm—Visual (COM)	Visual alarm contact
11	Major alarm—Visual (COM)	Visual alarm contact
12	Minor alarm—Visual (COM	Visual alarm contact
13	Critical alarm—Audible (COM)	Audible alarm contact
14	Major alarm—Audible (COM)	Audible alarm contact
15	Minor alarm—Audible (COM)	Audible alarm contact
16	External alarm—(COM)	External alarm contact
19	Critical alarm—Visual (NO)	Visual alarm contact
20	Major alarm—Visual (NO)	Visual alarm contact
21	Minor alarm—Visual (NO	Visual alarm contact
22	Critical alarm—Audible (NO)	Audible alarm contact
23	Major alarm—Audible (NO)	Audible alarm contact
24	Minor alarm—Audible (NO)	Audible alarm contact
25	External alarm—(NO)	External alarm contact

Index

Numbers

8691omSF central processing unit (CPU) 21
8691SF central processing unit (CPU) 21

A

alarm module
- alarm conditions 21
- configuring jumpers 28
- display panel 20
- LEDs 20

alarms
- aisle 24
- central office 24

B

back panel 22
breaker interface panel (BIP)
- configuring multiple BIPs 24
- configuring standalone BIPs 25
- installing 31
- physical description 17
- technical specifications 71

C

cables
- BIP ground cable, connecting 49
- chassis power supplies, connecting 36, 47
- DC input power feeds, connecting 50
- ground cables, connecting to rack 46
- J1 and J2 shelf alarm cables 73
- J3 and J4 office alarm cables 75
- J5 standalone office alarm cable 77
- pin assignments 73
- power supply cables, routing 45

central office alarm connectors 24
circuit breakers 18, 70
conventions, text 14
customer support 15

D

DC electrical requirements 33

E

electrical requirements, DC 33
external cable pin assignments 73

F

front panel
- description 18
- LEDs 66

G

grounding requirements 34

I

initial power-up 61

J

jumpers, shelf alarm cables 28

L

LEDs
- alarm module 20
- BIP front panel 66
- description 66
- location 66

P

pin assignments, cables 73

power
- DC input requirements 33
- initial power-up 61
- powering off the system 62

power supplies
- cable routing 45
- connecting cables 36, 47

power terminal block 26

problem solving
- corrective actions 69
- interpreting LEDs 65

product support 15

publications
- hard copy 14

R

requirements
- 8691omSF CPU 17, 21
- 8691SF CPU 17, 21
- cooling 34
- DC 33
- grounding 34
- physical 31, 33

S

shelf alarm cables
- installing 59
- jumper default configurations 28

shelf alarm connectors 23

shipment contents 32

support, Nortel Networks 15

T

technical publications 14

technical specifications 71

technical support 15

text conventions 14

troubleshooting 65

V

verifying the installation 60