NT0H65AM **323-1701-221**

Nortel

Optical Metro 5100/5200

Connection Procedures, Part 2 of 2

Standard Release 8.0 Issue 1 April 2005

What's inside...

Connecting components

See Part 1 for the following:

Accessing internal connectors
Preparing to connect optical components

NORTEL

Copyright © 2000–2005 Nortel, All Rights Reserved

The information contained herein is the property of Nortel and is strictly confidential. Except as expressly authorized in writing by Nortel, the holder shall keep all information contained herein confidential, shall disclose the information only to its employees with a need to know, and shall protect the information, in whole or in part, from disclosure and dissemination to third parties with the same degree of care it uses to protect its own confidential information, but with no less than reasonable care. Except as expressly authorized in writing by Nortel, the holder is granted no rights to use the information contained herein.

This information is provided “as is”, and Nortel Networks does not make or provide any warranty of any kind, expressed or implied, including any implied warranties of merchantability, non-infringement of third party intellectual property rights, and fitness for a particular purpose.

Nortel, the Nortel logo, the Globemark, and OPTera are trademarks of Nortel Networks.

HP and HP-UX are trademarks of Hewlett-Packard, Inc. Pentium is a trademark of Intel Corporation. Internet Explorer, Windows, and Windows NT are trademarks of Microsoft Corporation. Netscape Communicator is a trademark of Netscape Communications Corporation. Common Desktop Environment, Java, Solaris, and Ultra are trademarks of Sun Microsystems, Inc. UNIX is a trademark of X/Open Company Limited.

Printed in Canada and the United Kingdom

Contents

About this document v

Audience for this document v
Optical Metro 5100/5200 library vi
Technical assistance service telephone numbers viii

Connecting components 3-1

List of procedures

3-1 Connecting multiple OMXs in a series 3-9
3-2 Connecting east and west OMX modules in the same drawer 3-22
3-3 Connecting OMXs to other optical components 3-28
3-4 Connecting OMX 16CH DWDM (C Band) to OMX 16CH DWDM (L Band) 3-35
3-5 Connecting C&L splitter/couplers 3-39
3-6 Connecting 1310 nm splitter/couplers 3-48
3-7 Connecting ECTs 3-52
3-8 Connecting PBEs 3-60
3-9 Connecting APBEs 3-64
3-10 Connecting Discrete VOAs 3-68
3-11 Connecting OFA circuit packs 3-72
3-12 Connecting OFA filler cards 3-79
3-13 Connecting an in-line OFA shelf using a fractional T1 line 3-86
3-14 Connecting east and west OSC modules within a single OSC tray at a monitoring site 3-90
3-15 Connecting OSC trays to other optical components 3-93
3-16 Connecting OSC trays to an OSC circuit pack 3-97
3-17 Connecting OSC wayside channels (WSC ports) to subtending equipment through the OSC tray 3-102
3-18 Connecting trunk switches to optical components 3-109
3-19 Connecting an OMX to OCLD circuit packs 3-113
3-20 Connecting an OMX to OTR circuit packs 3-127
3-21 Connecting an OMX to Muxponder (MOTR) circuit packs 3-139
3-22 Connecting an OMX to OCLD filler cards or LC filler cards 3-150
3-23 Connecting unused OMX pigtails to OCLD filler cards 3-158
3-24 Connecting OTR circuit packs to subtending equipment 3-161
3-25 Connecting OTR circuit packs to subtending equipment through a Transponder Protection Tray 3-167
3-26 Connecting OTR 10 Gbit/s circuit packs for pass-through connections through a patch panel 3-176

3-27 Connecting OTR 10 Gbit/s Enhanced circuit packs for pass-through connections through a patch panel 3-184
3-28 Connecting OCI circuit packs to subtending equipment 3-191
3-29 Connecting OCI SRM circuit packs to subtending equipment through a patch panel 3-197
3-30 Connecting OCI SRM ESCON circuit packs to subtending equipment through a patch panel 3-206
3-31 Connecting OCI SRM GbE/FC or OCI SRM GbE circuit packs to subtending equipment 3-217
3-32 Connecting OCI SRM 1310 nm LC circuit packs to subtending equipment 3-223
3-33 Connecting OCI SRM 1310 nm LC circuit packs to subtending equipment through a patch panel 3-230
3-34 Connecting between Muxponder client interfaces and subtending equipment for bidirectional GbE traffic 3-239
3-35 Connecting between Muxponder client interfaces and subtending equipment for unidirectional GbE traffic 3-253
3-36 Connecting a site to the backbone 3-269
3-37 Interconnecting Optical Trunk Switches through the backbone 3-273
3-38 Interconnecting Enhanced Trunk Switches through the backbone 3-279
3-39 Interconnecting trunk switches through the backbone using a patch panel 3-284
3-40 Connecting OCLDs or OTRs to the backbone at sites without OMXs 3-290
3-41 Connecting OCLDs or OTRs to the patch panel at sites without OMXs 3-294
3-42 Connecting the patch panel to the backbone at a site without OMXs 3-300
3-43 Connecting DSCM Trays to optical components 3-303
3-44 Installing an attenuator at the BAND ADD port in a DWDM OMX 3-309
3-45 Installing an attenuator at the BAND DROP port in a CWDM or DWDM OMX 3-314
3-46 Installing an attenuator at the OTS IN port in an OMX ITU CWDM 3-321
3-47 Installing an LC-LC attenuator at the channel port in an OMX 16CH DWDM 3-324
3-48 Installing an attenuator at the input of an OFA circuit pack 3-328
3-49 Installing an attenuator at the output of an OFA circuit pack 3-330
3-50 Installing an attenuator at the add port in an OSC tray 3-332
3-51 Installing a Mode-Conditioning Plug 3-335

About this document

ATTENTION
This document is presented in two parts: Part 1 and Part 2. Each part has its own table of contents. The table of contents in Part 1 contains topics found in Part 1 only. The table of contents in Part 2 contains topics found in Part 2 only.

You are reading Part 2 of *Connection Procedures,* 323-1701-221.

This document provides procedures for connecting the Nortel Optical Metro 5100/5200 product (identified prior to Release 7 as Nortel Networks OPTera Metro 5000-series Multiservice Platform).

Part 1 of the *Connection Procedures* includes:

- accessing internal connectors
- preparing to connect optical components

Part 2 of the *Connection Procedures* includes:

- connecting components

Audience for this document

This document is intended for the following audience:

- strategic and current planners
- provisioners
- installers
- transmission standards engineers
- field maintenance engineers
- system line-up and testing (SLAT) personnel
- maintenance technicians
- network administrators

Optical Metro 5100/5200 library

The Optical Metro 5100/5200 library consists of the *Nortel Optical Metro 5100/5200 Technical Publications*, NT0H65AM.

Technical Publications

The *Optical Metro 5100/5200 Nortel Technical Publications* (NTP) consist of descriptive information and procedures.

Descriptive information

These NTPs provide detailed descriptive information about the Optical Metro 5100/5200 system, including system software and hardware descriptions, technical specifications, ordering information, and TL1 user information.

Procedures

These NTPs contain all procedures required to install, provision, and maintain the Optical Metro 5100/5200 system.

The following roadmap lists the documents in the Optical Metro 5100/5200 library.

OM2805p

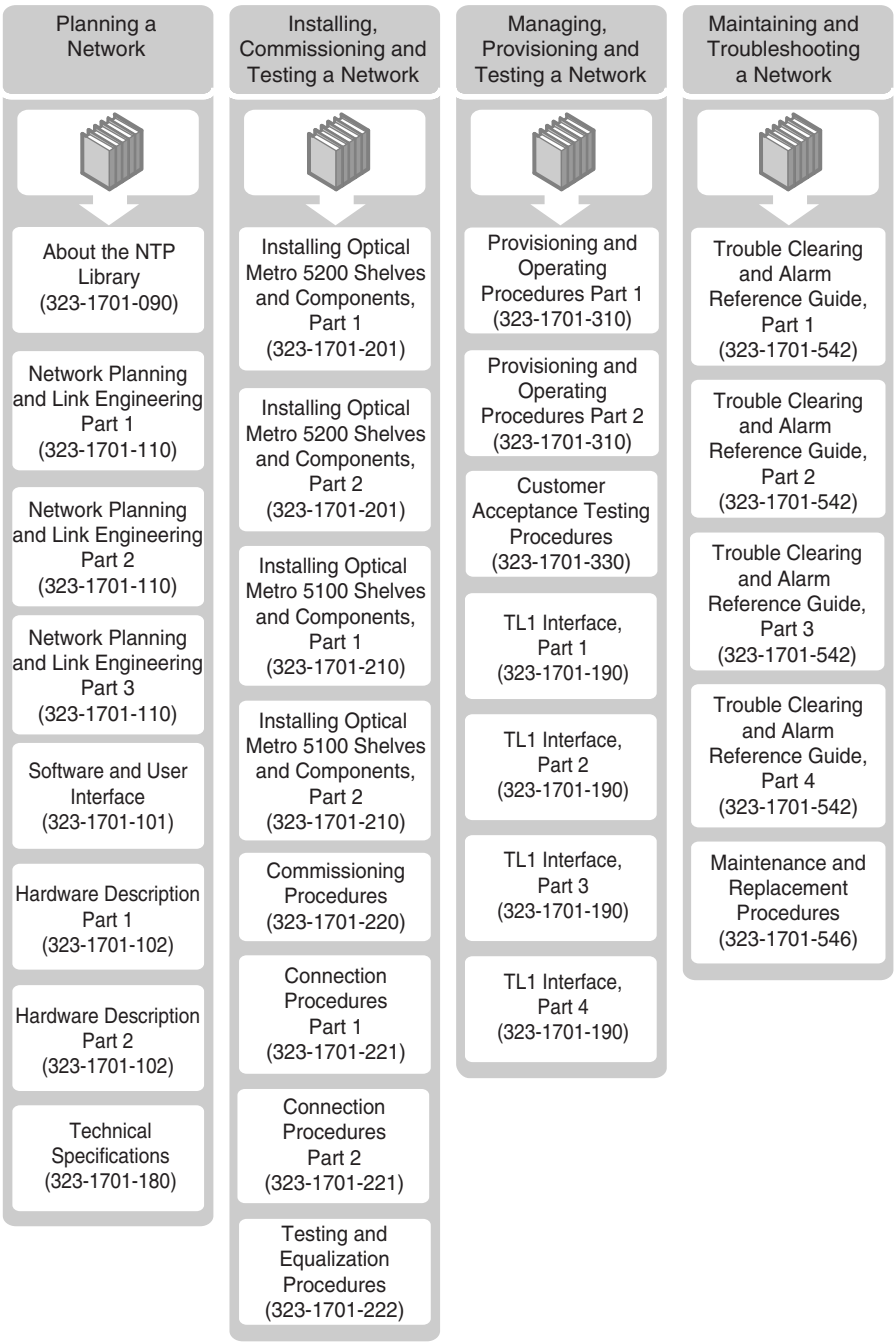

Technical assistance service telephone numbers

For technical support and information from Nortel Networks, refer to the following table.

Technical Assistance Service	
For service-affecting problems: For 24-hour emergency recovery or software upgrade support, that is, for: • restoration of service for equipment that has been carrying traffic and is out of service • issues that prevent traffic protection switching • issues that prevent completion of software upgrades	**North America:** 1-800-4NORTEL (1-800-466-7835) **International:** 001-919-992-8300
For non-service-affecting problems: For 24-hour support on issues requiring immediate support or for 14-hour support (8 a.m. to 10 p.m. EST) on upgrade notification and non-urgent issues.	**North America:** 1-800-4NORTEL (1-800-466-7835) ***Note:*** You require an express routing code (ERC). To determine the ERC, see our corporate Web site at www.nortel.com. Click on the Express Routing Codes link. **International:** Varies according to country. For a list of telephone numbers, see our corporate Web site at www.nortel.com. Click on the Contact Us link.
Global software upgrade support:	**North America:** 1-800-4NORTEL (1-800-466-7835) **International:** Varies according to country. For a list of telephone numbers, see our corporate Web site at www.nortel.com. Click on the Contact Us link.

Connecting components

Use the procedures in this chapter to connect Optical Metro 5100 and Optical Metro 5200 components. The procedure for each component refers only to the connections for signals leaving the component. Follow procedures to connect adjacent upstream components for signals that enter the component (see Table 3-2 on page 3-4).

The procedures in this chapter frequently identifies components using a generic name. For example, OFA refers to the Standard OFA, the HIP OFA and the OFA VGA circuit packs, unless otherwise stated. For information on all circuit pack types, see *Hardware Description,* 323-1701-102. For circuit pack compatibility and configuration rules see, *Network Planning and Link Engineering,* 323-1701-110.

For most amplified networks, ensure that you have made all connections except for the IN and OUT ports of OFA circuit packs. Run the optical patch cords to the OFA circuit packs, but do not connect them until the bands entering the amplifiers have been equalized. This rule applies to all amplified networks using ECTs, PBEs, or distributed equalization.

For networks that use APBEs for equalization, you can complete all connections (including OFA connections) before equalization.

For more information about equalization, see the chapter "Equalizing amplified systems" in *Testing and Equalization Procedures*, 323-1701-222.

Requirements

Before you begin the procedures in this chapter, make sure that you have

- installed the System Manager software
- installed all of the equipment required for your network configuration

ATTENTION

It is important that you accurately label all the fibers as you install them and make the connections to your equipment. Troubleshooting, maintenance, and upgrade tasks will be simplified if you understand all connections before you undertake any of these activities.

Use this chapter in conjunction with the "Preparing to connect optical components" chapter to ensure that you understand the optical connections required, according to your site type.

Table 3-1 lists the tools and materials you require to complete the procedures in this chapter.

Table 3-1
Required tools and materials

Item	Quantity	Supplied
Antistatic wrist and heel straps	1	no
Fiber-optic cleaning kit	1	no
Fiber inspection scope	1	no
Phillips #1 screwdriver	1	no
Phillips #2 screwdriver	1	no
Optical patch cords	as required	no
Optical power meter (OPM)	1	no
Adapters (if necessary)	1	no
Attenuators	as required	no

Precautions

DANGER
Invisible laser radiation
The Optical Metro 5100/5200 operates up to a Hazard Level of k x 3A (IEC 60825-2:2000) or 1M (IEC 60825-2:2004). Use only viewing instruments with proper optical attenuation.

CAUTION
Risk of shelf malfunction
Nortel Networks recommends that you do not use cellular phones at any Optical Metro 5100/5200 site. The use of cellular phones in proximity to Optical Metro equipment can cause shelf malfunction.

CAUTION
Risk of affecting network reliability
Make sure that all connectors are cleaned before you make the connections (or re-connections) described in this procedure. For cleaning information, see the chapter "Cleaning connectors", in *Installing Optical Metro 5200 Shelves and Components*, 323-1701-201.

CAUTION
Electrostatic discharge
Use antistatic protection when you connect components.

CAUTION
Possible risk of damage to equipment
When you are connecting components, make sure that you snap the connectors into place to avoid air gaps.

Procedure list

Table 3-2 lists the procedures in this chapter.

Table 3-2
Procedures for connecting shelf components

Procedure	Page	Comments
3-1 Connecting multiple OMXs in a series	3-9	Follow this procedure the connect multiple OMXs at a site. Perform this procedure before connecting OMXs to any other optical component.
3-2 Connecting east and west OMX modules in the same drawer	3-22	Follow this procedure to connect the east and west OMX modules in the same drawer.
3-3 Connecting OMXs to other optical components	3-28	Follow this procedure to connect the first east-facing and west-facing OMXs in a series to other optical components.
3-4 Connecting OMX 16CH DWDM (C Band) to OMX 16CH DWDM (L Band)	3-35	Follow this procedure to connect OMX 16CH DWDM (C Band) to OMX 16CH DWDM (L Band).
3-5 Connecting C&L splitter/couplers	3-39	Follow this procedure to connect C&L splitter/couplers to other optical components.
3-6 Connecting 1310 nm splitter/couplers	3-48	Follow this procedure to connect 1310 nm splitter/couplers to other optical components.
3-7 Connecting ECTs	3-52	Follow this procedure to connect ECTs to other optical components.

Table 3-2 (continued)
Procedures for connecting shelf components

Procedure	Page	Comments
3-8 Connecting PBEs	3-60	Follow this procedure to connect a PBE to other optical components.
3-9 Connecting APBEs	3-64	Follow this procedure to connect an APBE circuit pack to other optical components.
3-10 Connecting Discrete VOAs	3-68	Follow this procedure to connect a Discrete VOA to other optical components.
3-11 Connecting OFA circuit packs	3-72	Follow this procedure to connect an OFA circuit pack to other optical components.
3-12 Connecting OFA filler cards	3-79	Follow this procedure to connect an OFA filler card to other optical components.
3-13 Connecting an in-line OFA shelf using a fractional T1 line	3-86	Follow this procedure to connect to an in-line OFA shelf using a fractional T1 line.
3-14 Connecting east and west OSC modules within a single OSC tray at a monitoring site	3-90	Follow this procedure to connect the east and west OSCs at a monitoring site.
3-15 Connecting OSC trays to other optical components	3-93	Follow this procedure to connect OSC trays to other optical components.
3-16 Connecting OSC trays to an OSC circuit pack	3-97	Follow this procedure to connect OSC circuit packs to OSC trays.
3-17 Connecting OSC wayside channels (WSC ports) to subtending equipment through the OSC tray	3-102	Follow this procedure to connect OSC wayside channels to subtending equipment.
3-18 Connecting trunk switches to optical components	3-109	Follow this procedure to connect the trunk switch to other optical components.
3-19 Connecting an OMX to OCLD circuit packs	3-113	Follow this procedure to connect an OMX to the corresponding OCLD circuit packs.
3-20 Connecting an OMX to OTR circuit packs	3-127	Follow this procedure to connect an OMX to the corresponding OTR circuit packs.
3-21 Connecting an OMX to Muxponder (MOTR) circuit packs	3-139	Follow this procedure to connect an OMX to the corresponding Muxponder circuit packs.
3-22 Connecting an OMX to OCLD filler cards or LC filler cards	3-150	Follow this procedure to connect an OMX to OCLD filler cards or LC filler cards.
3-23 Connecting unused OMX pigtails to OCLD filler cards	3-158	Follow this procedure if you have unused pigtails on an OMX (Standard).

Table 3-2 (continued)
Procedures for connecting shelf components

Procedure	Page	Comments
3-24 Connecting OTR circuit packs to subtending equipment	3-161	Follow this procedure to connect OTR circuit packs to subtending equipment if the network does not use a Transponder Protection Tray.
3-25 Connecting OTR circuit packs to subtending equipment through a Transponder Protection Tray	3-167	Follow this procedure to connect OTR circuit packs to subtending equipment if the network uses a Transponder Protection Tray.
3-26 Connecting OTR 10 Gbit/s circuit packs for pass-through connections through a patch panel	3-176	Follow this procedure to connect OTR circuit packs for signal regeneration.
3-27 Connecting OTR 10 Gbit/s Enhanced circuit packs for pass-through connections through a patch panel	3-184	Follow this procedure to connect OTR 10 Gbit/s Enhanced circuit packs for signal regeneration.
3-28 Connecting OCI circuit packs to subtending equipment	3-191	Follow this procedure to connect OCI circuit packs to subtending equipment.
3-29 Connecting OCI SRM circuit packs to subtending equipment through a patch panel	3-197	Follow this procedure to connect OCI SRM circuit packs to subtending equipment. A patch panel must be used to manage these connections.
3-30 Connecting OCI SRM ESCON circuit packs to subtending equipment through a patch panel	3-206	Follow this procedure to connect OCI SRM ESCON circuit packs to subtending equipment through a patch panel.
3-31 Connecting OCI SRM GbE/FC or OCI SRM GbE circuit packs to subtending equipment	3-217	Follow this procedure to connect OCI SRM GbE/FC circuit packs to subtending equipment.
3-32 Connecting OCI SRM 1310 nm LC circuit packs to subtending equipment	3-223	Follow this procedure to connect OCI SRM 1310 nm LC circuit packs to subtending equipment.
3-33 Connecting OCI SRM 1310 nm LC circuit packs to subtending equipment through a patch panel	3-230	Follow this procedure to connect OCI SRM 1310 nm LC circuit packs to subtending equipment through a patch panel.
3-34 Connecting between Muxponder client interfaces and subtending equipment for bidirectional GbE traffic	3-239	Follow this procedure to connect and route fiber patch cords between the Muxponder client interfaces and the subtending equipment when carrying bidirectional GbE traffic.
3-35 Connecting between Muxponder client interfaces and subtending equipment for unidirectional GbE traffic	3-253	Follow this procedure to connect and route fiber patch cords between the Muxponder client interfaces and the subtending equipment when carrying unidirectional GbE traffic.

Table 3-2 (continued)
Procedures for connecting shelf components

Procedure	Page	Comments
3-36 Connecting a site to the backbone	3-269	Follow this procedure to connect a site to the backbone if the network does not use trunk switches.
3-37 Interconnecting Optical Trunk Switches through the backbone	3-273	Follow this procedure to interconnect Optical Trunk Switches through the backbone.
3-38 Interconnecting Enhanced Trunk Switches through the backbone	3-279	Follow this procedure to interconnect Enhanced Trunk Switches through the backbone.
3-39 Interconnecting trunk switches through the backbone using a patch panel	3-284	Follow this procedure to interconnect trunk switches through the backbone using a patch panel.
3-40 Connecting OCLDs or OTRs to the backbone at sites without OMXs	3-290	Follow this procedure to connect OCLDs or OTRs to the backbone for sites without OMXs. This procedure assumes that you do not require attenuation between the OCLDs or OTRs.
3-41 Connecting OCLDs or OTRs to the patch panel at sites without OMXs	3-294	Follow this procedure to connect the OCLD or OTR circuit pack to the NT0H43CA or NT0H43CB patch panel at a site without OMXs.
3-42 Connecting the patch panel to the backbone at a site without OMXs	3-300	Follow this procedure to connect the patch panel to the backbone at a site without OMXs.
3-43 Connecting DSCM Trays to optical components	3-303	Follow this procedure to connect the DSCM Tray to optical components.
3-44 Installing an attenuator at the BAND ADD port in a DWDM OMX	3-309	Follow this procedure to install an attenuator in a CWDM or DWDM OMX to attenuate signals at a band level in the add direction.

Table 3-2 (continued)
Procedures for connecting shelf components

Procedure	Page	Comments
3-45 Installing an attenuator at the BAND DROP port in a CWDM or DWDM OMX	3-314	Follow this procedure to install an attenuator in a CWDM or DWDM OMX to attenuate signals at a band level in the drop direction.
3-46 Installing an attenuator at the OTS IN port in an OMX ITU CWDM	3-321	Follow this procedure to install an attenuator in an ITU CWDM OMX to attenuate signals in the drop direction.
3-47 Installing an LC-LC attenuator at the channel port in an OMX 16CH DWDM	3-324	Follow this procedure to install an LC attenuator in a channel add or drop port of an OMX 16CH DWDM.
3-48 Installing an attenuator at the input of an OFA circuit pack	3-328	Follow this procedure to install an attenuator at the IN port of an OFA circuit pack.
3-49 Installing an attenuator at the output of an OFA circuit pack	3-330	Follow this procedure to install an attenuator at the OUT port of an OFA circuit pack.
3-50 Installing an attenuator at the add port in an OSC tray	3-332	Follow this procedure if there are insufficient OSC link losses between adjacent sites.
3-51 Installing a Mode-Conditioning Plug	3-335	Follow this procedure if a Mode Conditioning Plug is required.

Procedure 3-1
Connecting multiple OMXs in a series

Follow this procedure to connect a series of OMXs. The order in which you connect the OMXs determines which OMX is the first east-facing OMX and which is the first west-facing OMX in the completed series. When you connect OMXs to other optical components, it is these first east-facing and west-facing OMXs that you use for the connections. You must therefore complete this procedure before you make any other optical connections that involve OMXs.

Review "Guidelines for determining the east-most and west-most OMXs in a series of interconnected OMXs" in the "Preparing to connect optical components" chapter in part 1 of this document.

To connect the east and west OMX modules in the same drawer, refer to the procedure "Connecting east and west OMX modules in the same drawer" on page 3-22. To connect OMXs to other optical components, refer to the procedure "Connecting OMXs to other optical components" on page 3-28.

The basic connections are the same for all types of OMXs. You must know which fibering method you are using before you start this procedure. For information about the different OMX fibering methods, see the chapter "Supported configurations" in *Network Planning and Link Engineering*, 323-1701-110.

This procedure includes instructions for fibering east and west OMXs independently (single-shelf fibering) before you connect multiple OMXs in a series. However, this fibering method has negative impacts on link budgets. Use this method only after careful analysis of the OMX losses associated with this type of fibering.

In OADM sites, the fiber that connects the last drop OMX and the first add OMX allows for optical pass-through. In terminal sites, which do not support optical pass-through, there is no connection between the last drop OMX and the first add OMX.

You can only connect CWDM OMXs to CWDM OMXs and DWDM OMXs to DWDM OMXs. For example, at a bridge site, you cannot connect a CWDM OMX to a DWDM OMX.

> ***Note:*** If the site uses OMX 8CH ITU CWDM or OMX 4CH ITU CWDM this procedure does not apply. Perform Procedure 3-3, "Connecting OMXs to other optical components" instead.

—continued—

Procedure 3-1 (continued)
Connecting multiple OMXs in a series

Requirements

Before you begin this procedure

- make sure that all connectors are clean. For information on cleaning, see "Cleaning connectors" in *Installing Optical Metro 5200 Shelves and Components*, 323-1701-201.
- make sure that you have completed all installation procedures.
- make sure that you are familiar with accessing connectors in an OMX.
  - — if you are connecting a DWDM (Standard) OMX, see Procedure 1-1, "Accessing connectors in an OMX (Standard) tray".
  - — if you are connecting a DWDM OMX 4CH + Fiber Manager or OMX 4 CH Enhanced, see Procedure 1-2, "Accessing connectors in an OMX 4CH + Fiber Manager or OMX 4 CH Enhanced".
  - — if you are connecting a OMX 1CH CWDM, see Procedure 1-3, "Accessing connectors in an OMX 1CH CWDM".
  - — if you are connecting a OMX 4CH CWDM, see Procedure 1-4, "Accessing connectors in an OMX 4CH CWDM".
  - — if you are connecting a OMX 1CH OADM ITU CWDM, see Procedure 1-5, "Accessing connectors in an OMX 1CH OADM ITU CWDM".
  - — if you are connecting a OMX 4CH OADM ITU CWDM, see Procedure 1-6, "Accessing connectors in an OMX 4CH ITU CWDM or OMX 4CH OADM ITU CWDM"
- make sure that you are familiar with fiber routing procedures. For fiber routing procedures for 5200 shelf components, refer to the "Fiber management" chapter in *Installing Optical Metro 5200 Shelves and Components*, 323-1701-201. For fiber routing procedures for 5100 shelf components, refer to the "Fiber management" chapter in *Installing Optical Metro 5100 Shelves and Components*, 323-1701-210.
- refer to the following tables to determine the connections you must make according to the OMX fibering method you are using.

—continued—

Procedure 3-1 (continued)
Connecting multiple OMXs in a series

Table 3-3 is a summary of the tables in this procedure.

Table 3-3
Summary table

OMX fibering method	Table	Figure
Standard OMX fibering	Table 3-4 on page 3-11	Figure 3-1 on page 3-17 and Figure 3-2 on page 3-18
Stacked OMX fibering	Table 3-5 on page 3-12	Figure 3-3 on page 3-19
Dual density OMX fibering	Table 3-6 on page 3-12 and Table 3-7 on page 3-12	Figure 3-4 on page 3-20
Quad density OMX fibering	Table 3-8 on page 3-13 and Table 3-9 on page 3-13	Figure 3-5 on page 3-20
Single-shelf fibering for multiple OMXs at OADM or bridge sites	Table 3-10 on page 3-14	Figure 3-6 on page 3-21

Table 3-4
Standard terminal and standard OADM OMX fibering

From OMX A (Band A)		**To OMX B (Band B)**			
		West OMX		**East OMX**	
West OMX	THRU OUT	OTS IN			
	THRU IN		OTS OUT		
East OMX	OTS IN			THRU OUT	
	OTS OUT				THRU IN

Note 1: See Figure 3-1 for Terminal sites, and Figure 3-2 for OADM sites.

Note 2: Standard OADM OMX fibering includes optical pass-through connections. These connections are described in step 8 of this procedure.

—continued—

Procedure 3-1 (continued)
Connecting multiple OMXs in a series

Table 3-5
Stacked OMX fibering

From OMX A (Band A)		**To OMX B (Band B)**			
		West OMX		**East OMX**	
West OMX	THRU OUT	OTS IN			
	THRU IN		OTS OUT		
East OMX	THRU IN			OTS OUT	
	THRU OUT				OTS IN
Note: See Figure 3-3 on page 3-19.					

Table 3-6
Near end dual density OMX fibering method

From OMX A (Band A)	**To OMX B (Band B)**	
THRU OUT	OTS IN	
THRU IN		OTS OUT
Note: See Figure 3-4 on page 3-20.		

Table 3-7
Far end dual density OMX fibering method

From OMX B (Band B)	**To OMX A (Band A)**	
THRU OUT	OTS IN	
THRU IN		OTS OUT

—continued—

Procedure 3-1 (continued)
Connecting multiple OMXs in a series

Table 3-8
Near end quad density OMX fibering method

From OMX A (Band A)	**To OMX B (Band B)**	
THRU OUT	OTS IN	
THRU IN		OTS OUT

From OMX B (Band B)	**To OMX C (Band C)**	
THRU OUT	OTS IN	
THRU IN		OTS OUT

From OMX C (Band C)	**To OMX D (Band D)**	
THRU OUT	OTS IN	
THRU IN		OTS OUT
Note: See Figure 3-5 on page 3-20.		

Table 3-9
Far end quad density OMX fibering method

From OMX D (Band D)	**To OMX C (Band C)**	
THRU OUT	OTS IN	
THRU IN		OTS OUT

From OMX C (Band C)	**To OMX B (Band B)**	
THRU OUT	OTS IN	
THRU IN		OTS OUT

From OMX B (Band B)	**To OMX A (Band A)**	
THRU OUT	OTS IN	
THRU IN		OTS OUT

—continued—

Procedure 3-1 (continued)
Connecting multiple OMXs in a series

Table 3-10
Single-shelf fibering at sites with multiple OMXs

From OMX A east (Band A) (see Note)	**To OMX A west (Band A)**
THRU OUT	THRU IN
THRU IN	THRU OUT
Note: For instructions on how to make these connections in a single drawer, see "Connecting east and west OMX modules in the same drawer" on page 3-22.	

From OMX A east (Band A)		**To OMX B west (Band B)**
East OMX	OTS IN	OTS OUT
	OTS OUT	OTS IN
Note: See Figure 3-6 on page 3-21.		

Table 3-11 lists the tools and materials you require to connect interconnect OMXs.

Table 3-11
Tools and materials

Item	**Quantity**	**Supplied**
Antistatic wrist and heel straps	1	no
Optical fiber cleaning kit	1	no
Fiber inspection scope	1	no
Phillips #1 screwdriver required only if OMX type is DWDM (Standard)	1	no
Optical patch cords (SC-SC)	as required	no

—continued—

Procedure 3-1 (continued)
Connecting multiple OMXs in a series

Precautions

DANGER
Invisible laser radiation
The Optical Metro 5100/5200 operates up to a Hazard Level of k x 3A (IEC 60825-2:2000) or 1M (IEC 60825-2:2004). Use only viewing instruments with proper optical attenuation.

CAUTION
Risk of affecting network reliability
Make sure that all connectors are cleaned before you make the connections (or re-connections) described in this procedure. For cleaning information, see the chapter "Cleaning connectors", in *Installing Optical Metro 5200 Shelves and Components*, 323-1701-201.

CAUTION
Possible risk of damage to equipment and fiber
Make sure that the bulkhead connectors are lowered and snapped into place before you close the drawers. Failure to do so can cause damage to the connector unit, the fibers attached to the connector unit, or both.

Observe the minimum bend radius of 1.18 inches (30 mm) for the patch cords. Always use the fiber management components in the drawer to route the fiber.

Allow for sufficient slack in the fibers that enter and exit the drawers. If sufficient slack is not left, the fibers can become stretched and damaged when the drawer is opened.

—continued—

Procedure 3-1 (continued)
Connecting multiple OMXs in a series

Action

Step	Action
1	Refer to the tables at the beginning of this procedure to determine the connections you must make.
2	Locate the first OMX in the series, and refer to the chapter "Accessing internal connectors" in part 1 of this document to access the connectors.
3	Connect one end of a patch cord to make the optical connections from OMX (A), according to the appropriate table in step 1. Figure 3-1 through Figure 3-6 starting on page 3-17 show the different fibering methods.
4	Route the patch cords to the next OMX in the series. If the next OMX is in another equipment rack, route the patch cords through the optical fiber management area at the top of the equipment rack, and down the vertical rack rail to the destination OMX.
5	Connect the other end of the patch cord to complete the optical connection to OMX (B).
6	Repeat step 3 through step 5 until all OMXs in the series are connected. For each repetition, OMX (B) from the previous connection becomes OMX (A) for the current connection, and the next OMX in the series becomes OMX (B). ***Note:*** For single-shelf fibering at sites with multiple OMXs, the series will be OMX (A) west to OMX (A) east, then OMX (A) east to OMX (B) west. In the next repetition, OMX (B) will become OMX (A). Refer to Table 3-10 on page 3-14 and Figure 3-6 on page 3-21.

7

If	**Then** go to
you are connecting the OMXs using the standard OADM fibering method, that is, the site requires optical pass-through (refer to Figure 3-2 on page 3-18)	step 8
you are not connecting the OMXs using the standard OADM fibering method, that is, the site does not require optical pass-through	step 9

8 Make the optical connections between the appropriate east and west OMXs to allow optical pass-through of the signal. Refer to Figure 3-2 on page 3-18. Use the following table:

West OMX	East OMX
THRU OUT	THRU IN
THRU IN	THRU OUT

9 Close the component drawers.

—end—

Figure 3-1
Standard OMX fibering with no optical pass-through for terminal sites or bridge sites

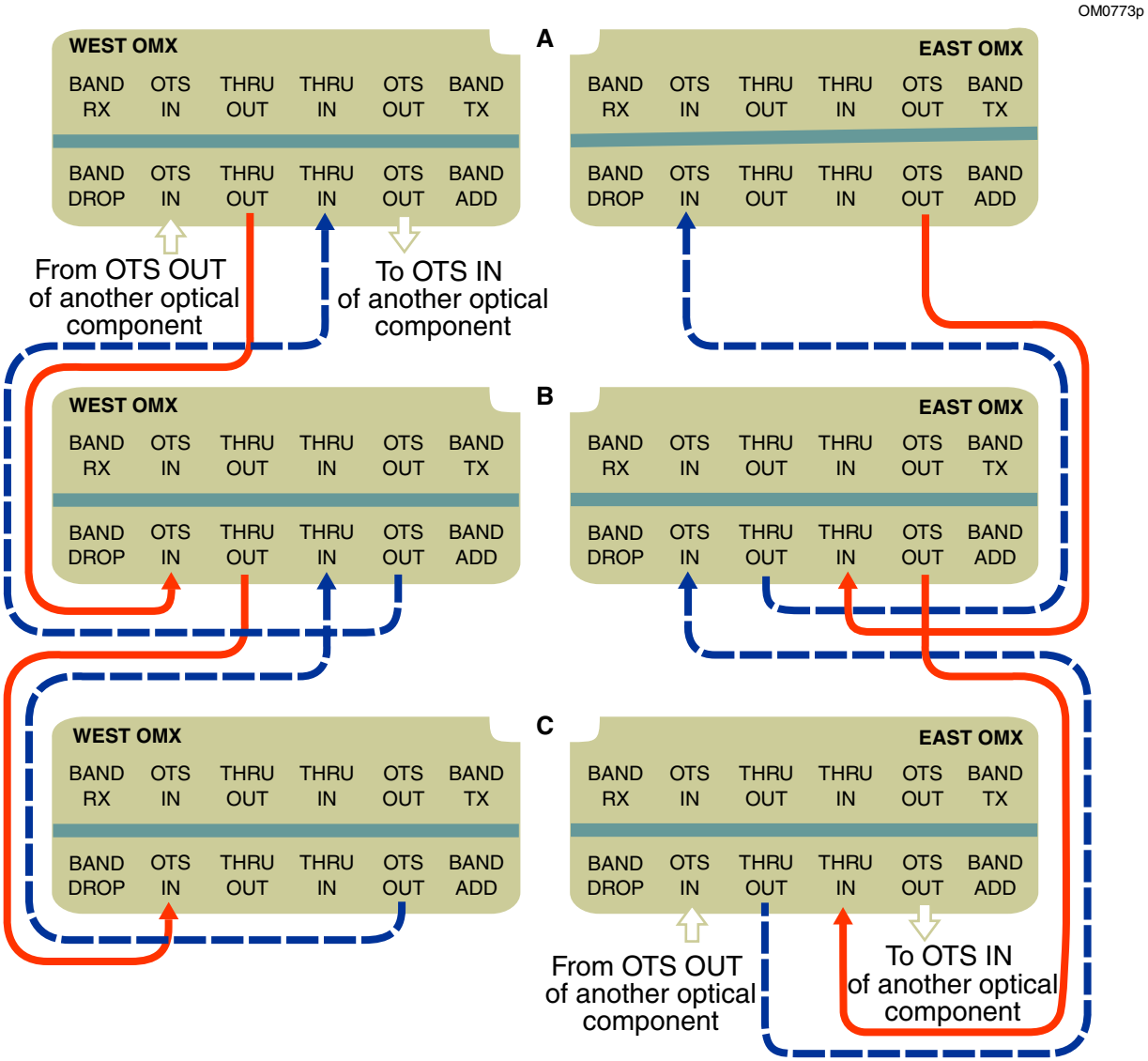

Figure 3-2
Standard OMX fibering with optical pass-through for OADM or bridge sites

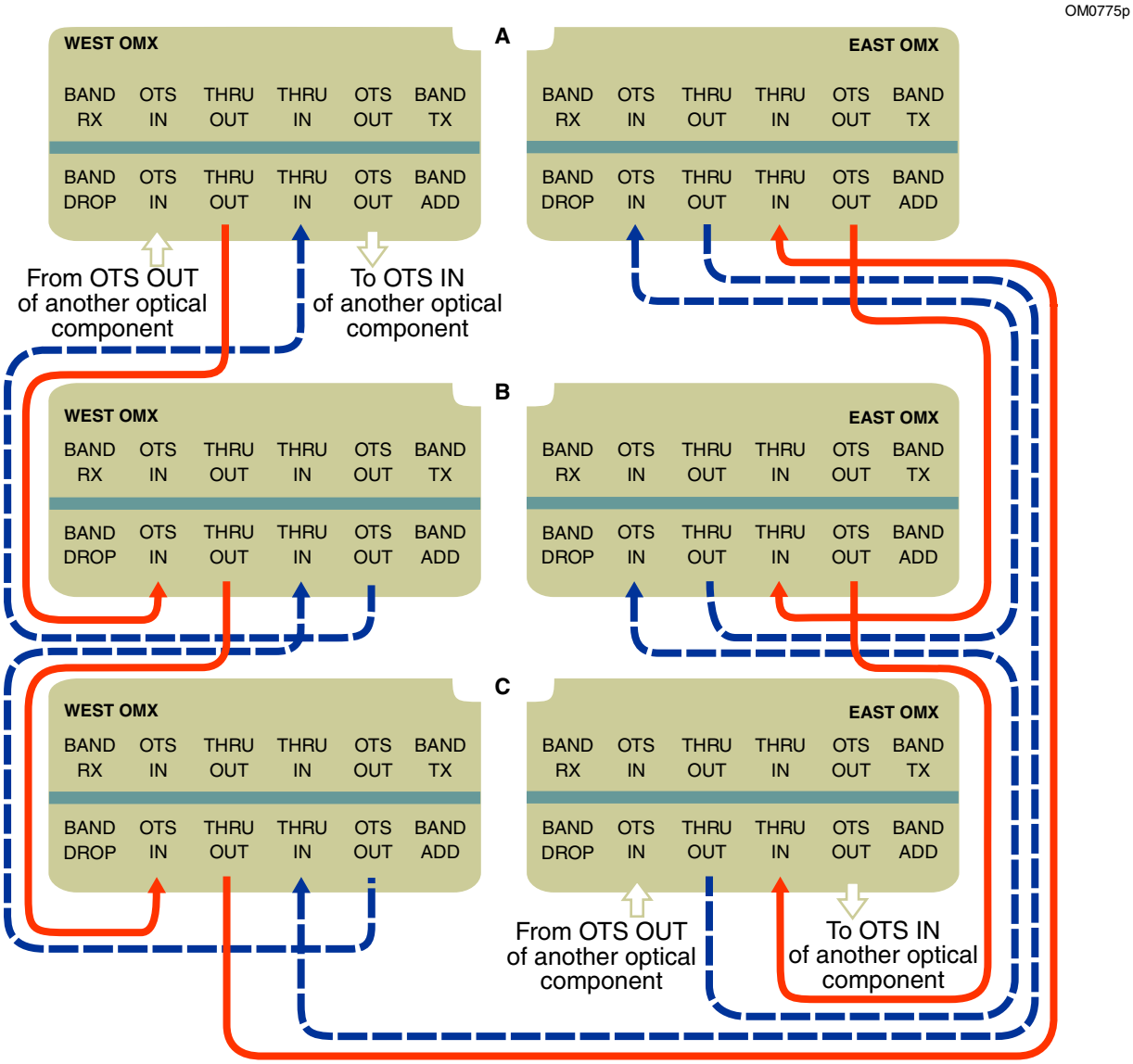

Figure 3-3
Stacked OMX fibering for terminal or bridge sites

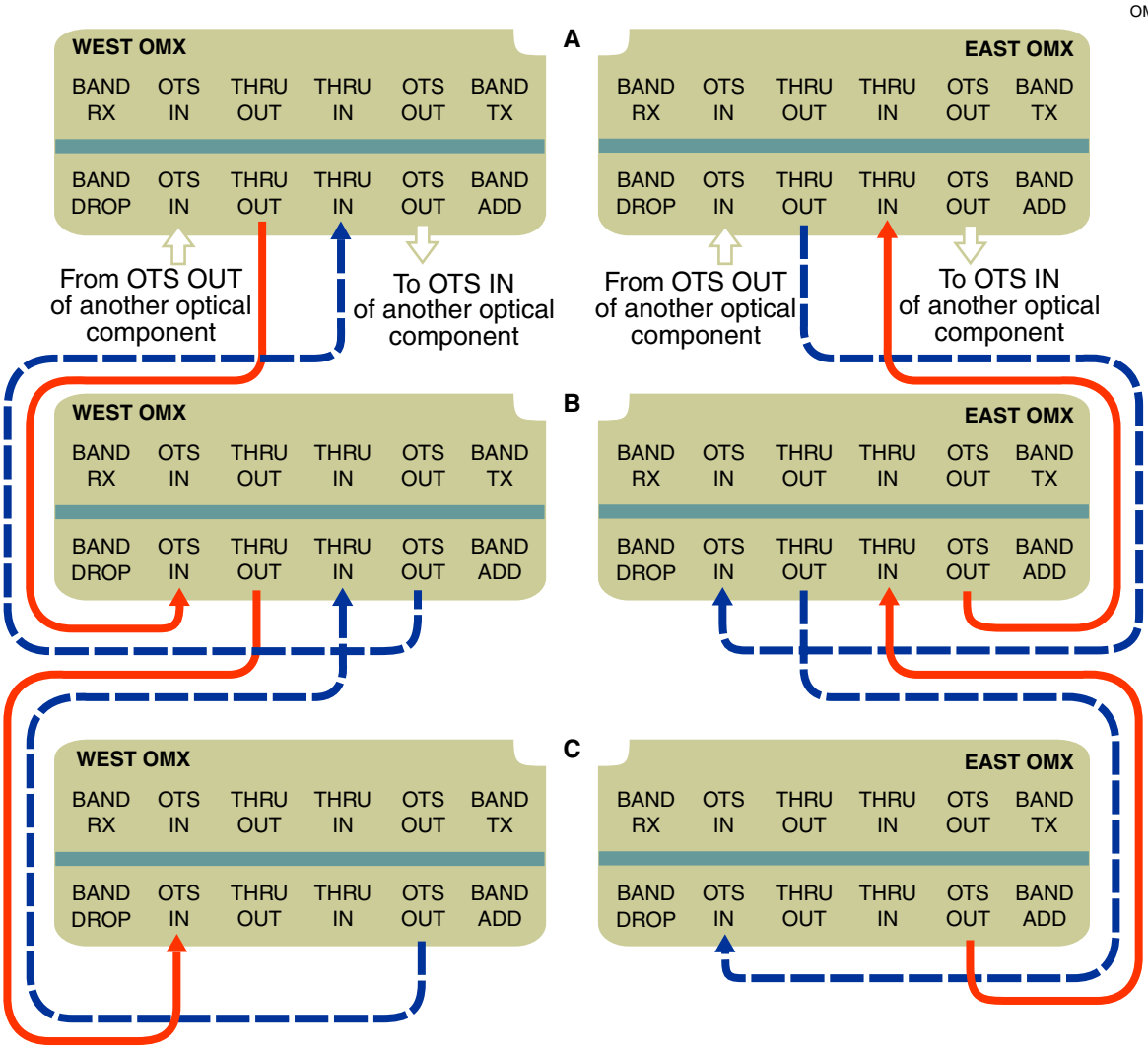

Figure 3-4
Dual density point-to-point OMX fibering method for terminal sites

OM1797p

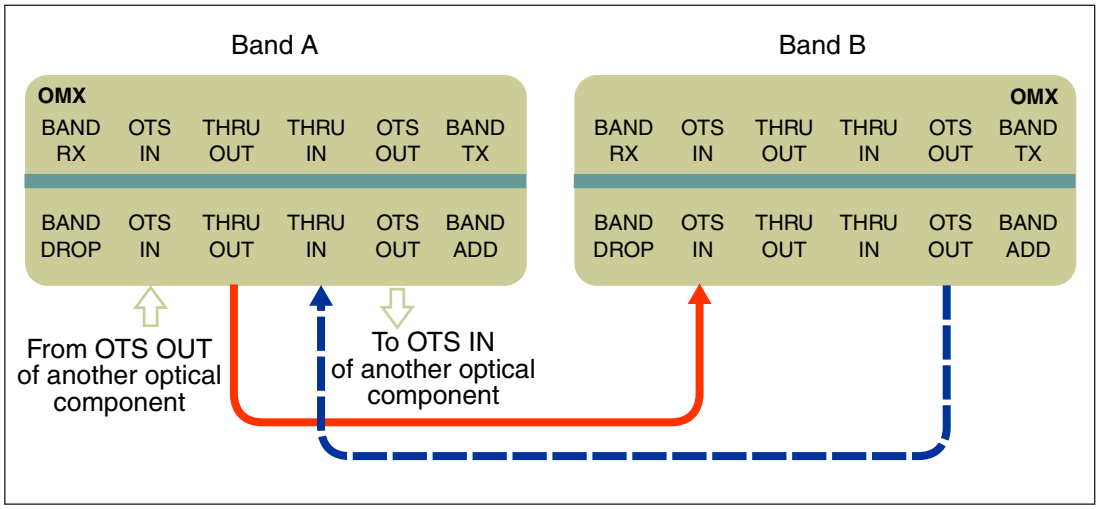

Figure 3-5
Quad density point-to-point OMX fibering method for terminal sites

OM1798p

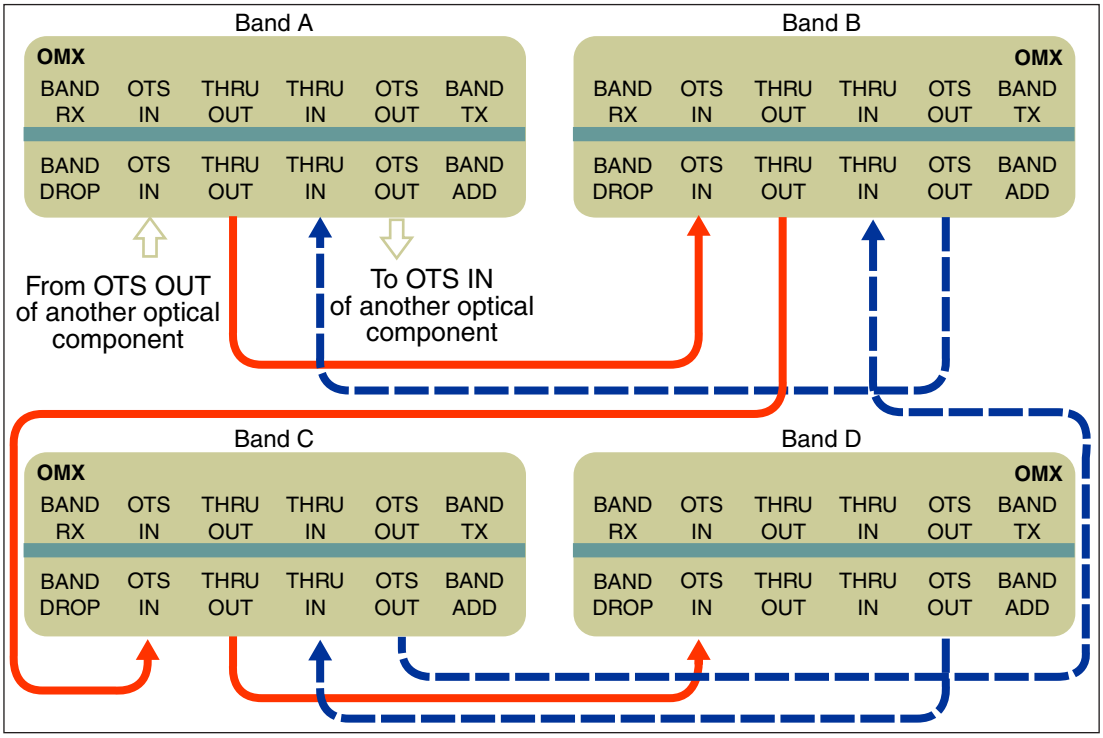

Figure 3-6
Single-shelf fibering for multiple OMXs at OADM or bridge sites

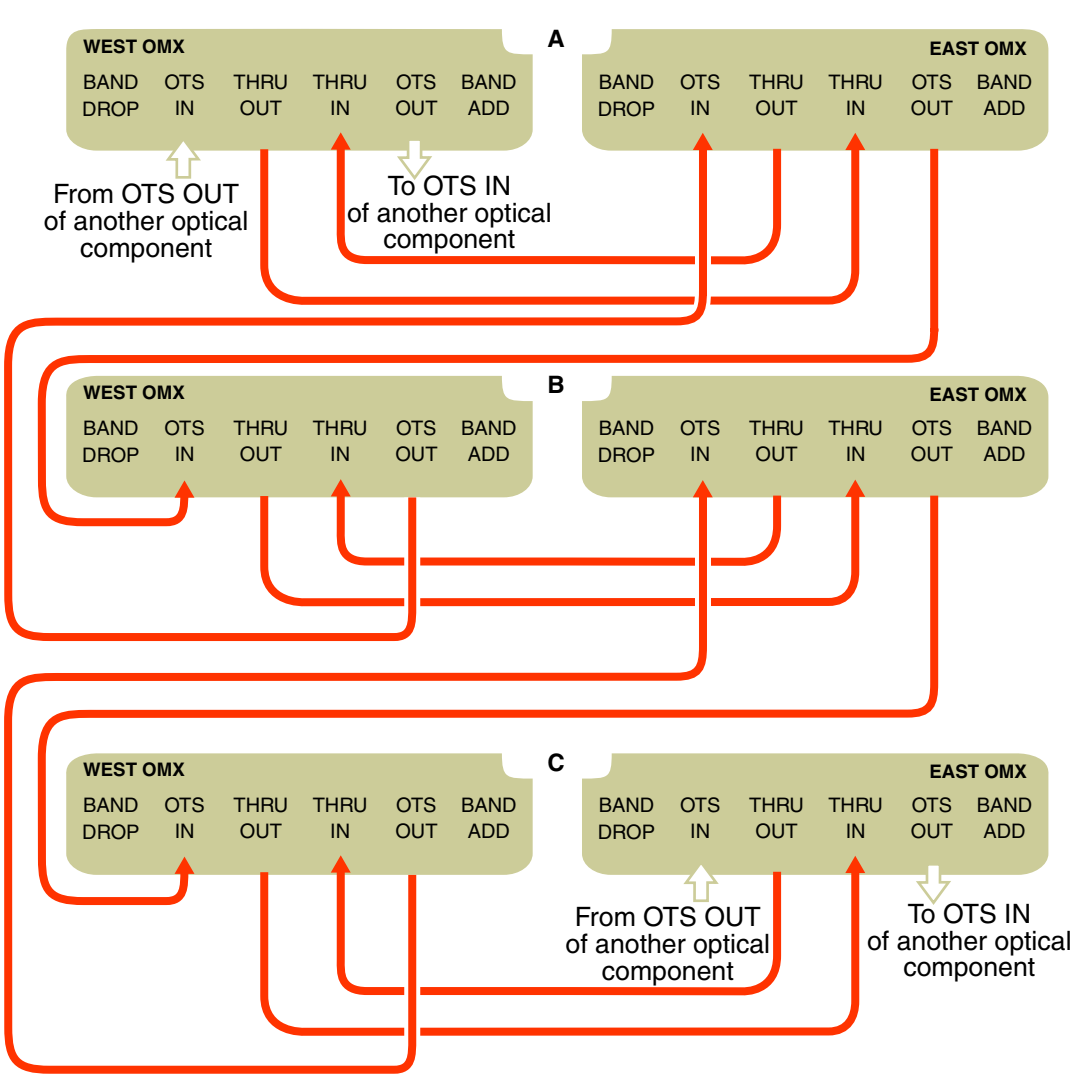

Procedure 3-2
Connecting east and west OMX modules in the same drawer

Follow this procedure to connect east and west OMXs in the same drawer.

When you connect OMX (Standard) or OMX 1CH CWDM modules, follow this procedure for single-shelf fibering. Also, use this procedure for dual and quad density fibering methods.

Single-shelf fibering is typically used at OADM or bridge sites with only one band. For information about OMX fibering methods and associated OMX filter losses, see the chapters "Supported configurations" and "Basic fixed value link engineering" in *Network Planning and Link Engineering*, 323-1701-110.

You can make single-shelf crossover connections only between identical OMXs. For example, you cannot connect an OMX 4CH CWDM to a DWDM OMX (Standard) at a bridge site.

> ***Note:*** If the site uses OMX 8CH ITU CWDM or an OMX 4CH ITU CWDM, this procedure does not apply. Perform Procedure 3-3, Connecting OMXs to other optical components instead.

Requirements

Before you begin this procedure

- make sure that all connectors are clean. For information on cleaning, see "Cleaning connectors" in *Installing Optical Metro 5200 Shelves and Components*, 323-1701-201
- make sure that you have completed all installation procedures
- make sure that you are familiar with accessing connectors in an OMX
  - — if you are interconnecting DWDM OMX (Standard) modules then refer to Procedure 1-1, "Accessing connectors in an OMX (Standard) tray".
  - — if you are interconnecting OMX 1CH CWDM modules then refer to Procedure 1-3, "Accessing connectors in an OMX 1CH CWDM".
  - — if you are interconnecting OMX 1CH OADM ITU CWDM modules then refer to Procedure 1-5, "Accessing connectors in an OMX 1CH OADM ITU CWDM".

—continued—

Procedure 3-2 (continued)
Connecting east and west OMX modules in the same drawer

- make sure that you are familiar with fiber routing procedures. For fiber routing procedures for 5200 shelf components, refer to the "Fiber management"chapter in *Installing Optical Metro 5200 Shelves and Components*, 323-1701-201. For fiber routing procedures for 5100 shelf components, refer to the "Fiber management" chapter in *Installing Optical Metro 5100 Shelves and Components*, 323-1701-210.
- if you are using single-shelf wiring, refer to Table 3-13 and Figure 3-7 to determine the connections you must make. If you are using the dual or quad density wiring methods, refer to Procedure 3-1 on page 3-9 to determine the connections you must make.

Table 3-12 lists the tools and materials you require to complete this procedure.

Table 3-12
Required tools and materials

Item	Quantity	Supplied
Antistatic wrist and heel straps	1	no
Fiber-optic cleaning kit	1	no
Fiber inspection scope	1	no
Phillips #1 screwdriver required only if OMX type is DWDM (Standard)	1	no
SC-SC Optical patch cords (except when connecting OMX (Standard) OMX modules)	1	no

—continued—

Procedure 3-2 (continued)
Connecting east and west OMX modules in the same drawer

Table 3-13
Single-shelf OMX connections

From	To
OMX (west)	**OMX (east)**
THRU OUT	THRU IN
THRU IN	THRU OUT

Precautions

DANGER
Invisible laser radiation
The Optical Metro 5100/5200 operates up to a Hazard Level of k x 3A (IEC 60825-2:2000) or 1M (IEC 60825-2:2004). Use only viewing instruments with proper optical attenuation.

CAUTION
Risk of affecting network reliability
Make sure that all connectors are cleaned before you make the connections (or re-connections) described in this procedure. For cleaning information, see the chapter "Cleaning connectors", in *Installing Optical Metro 5200 Shelves and Components*, 323-1701-201.

CAUTION
Possible risk of damage to equipment and fiber
Make sure that the bulkhead connectors are lowered and snapped into place before you close the drawers. Failure to do so can cause damage to the connector unit, the fibers attached to the connector unit, or both.

Observe the minimum bend radius of 1.18 inches (30 mm) for the patch cords. Always use the fiber management components in the drawer to route the fiber.

Allow for sufficient slack in the fibers that enter and exit the drawers. If sufficient slack is not left, the fibers can become stretched and damaged when the drawer is opened.

—continued—

Procedure 3-2 (continued)
Connecting east and west OMX modules in the same drawer

Action

Step	Action
1	Refer to the instructions at the beginning of this procedure to determine the connections you must make.
2	Locate the east and west OMXs in the rack, and refer to the chapter "Accessing internal connectors" in part 1 of this document to access the connectors in the OMXs.
3	**If** you are connecting / **Then** go to OMX (Standard) modules — step 4 OMX CWDM modules — step 7
4	Disconnect the THRU OUT pigtail from the back of the east OMX tray and route it through the slot in the left side of the OMX tray to the west OMX tray. See Figure 3-8 and Figure 3-9. Connect the pigtail to the THRU IN port in the west OMX.
5	Disconnect the THRU OUT pigtail from the back of the west OMX tray and route it through the slot in the right side of the OMX tray to the east OMX tray. See Figure 3-8 and Figure 3-9. Connect the pigtail to the THRU IN port in the east OMX.
6	Go to step 8.
7	Connect one SC/SC patch cord into each of the appropriate ports (see Table 3-13 on page 3-24) in the east OMX. Close the bulkhead connectors and route the fiber to the west OMX tray. Refer to Figure 3-10 on page 3-27 for an example. Connect the other end of each patch cord into the appropriate port (see Table 3-13 on page 3-24) in the west OMX. Close the bulkhead connectors.
8	Close the drawer.

—end—

Figure 3-7
OMX crossover connections for single-shelf fibering

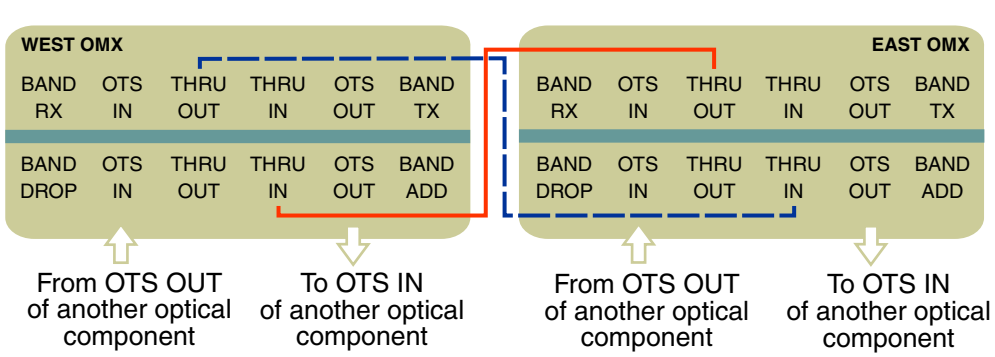

Figure 3-8
Making crossover connections between OMX (Standard) trays in a shelf

OM1799t

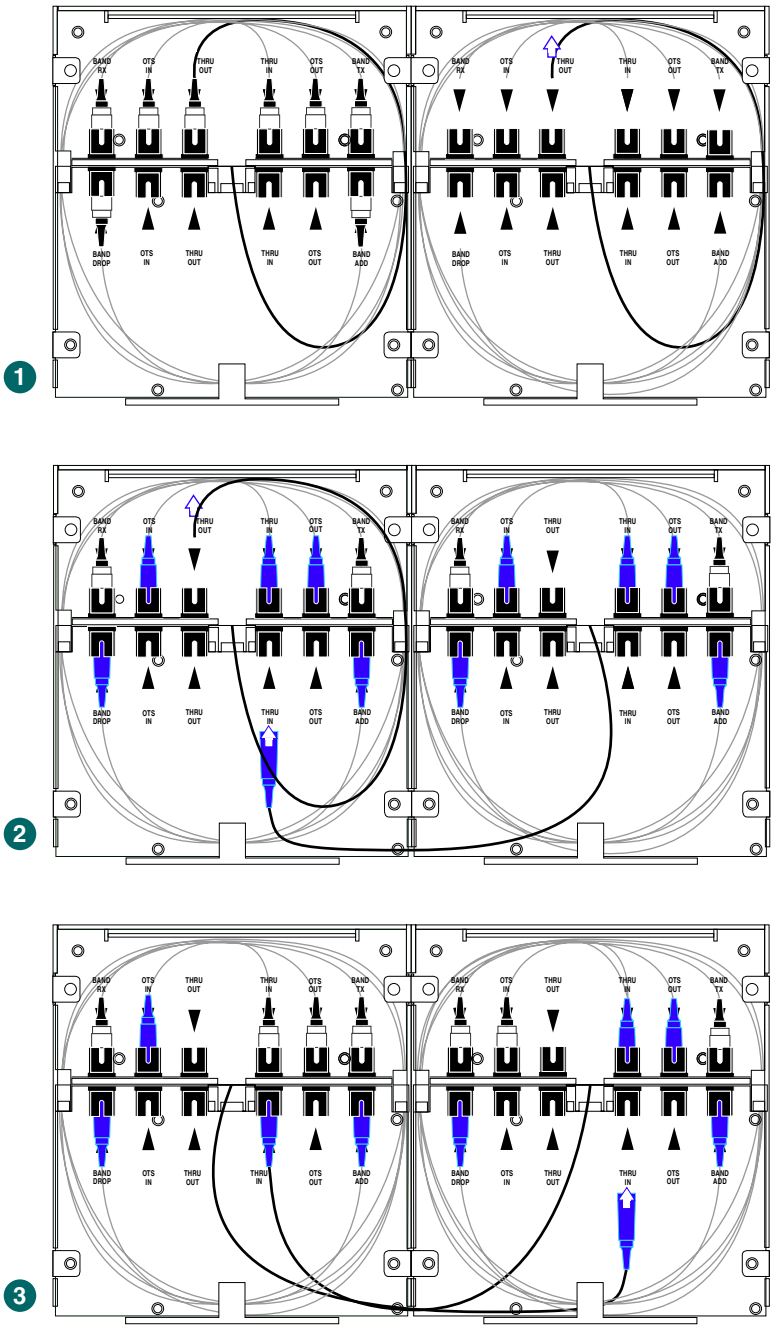

Figure 3-9
Interconnected east and west OMX (Standard) modules

OM0117p

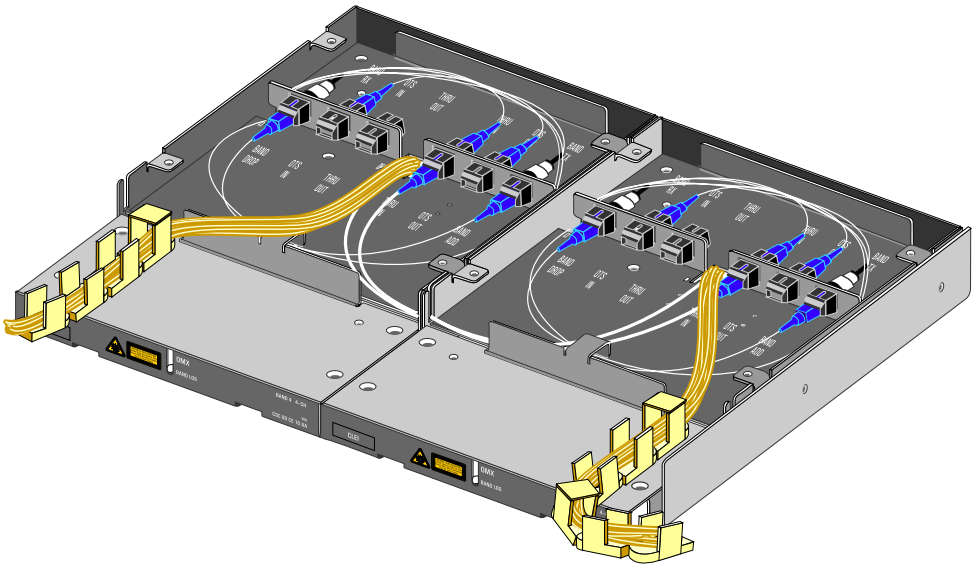

Figure 3-10
Interconnected east and west OMX 1CH CWDM modules

OM0968p

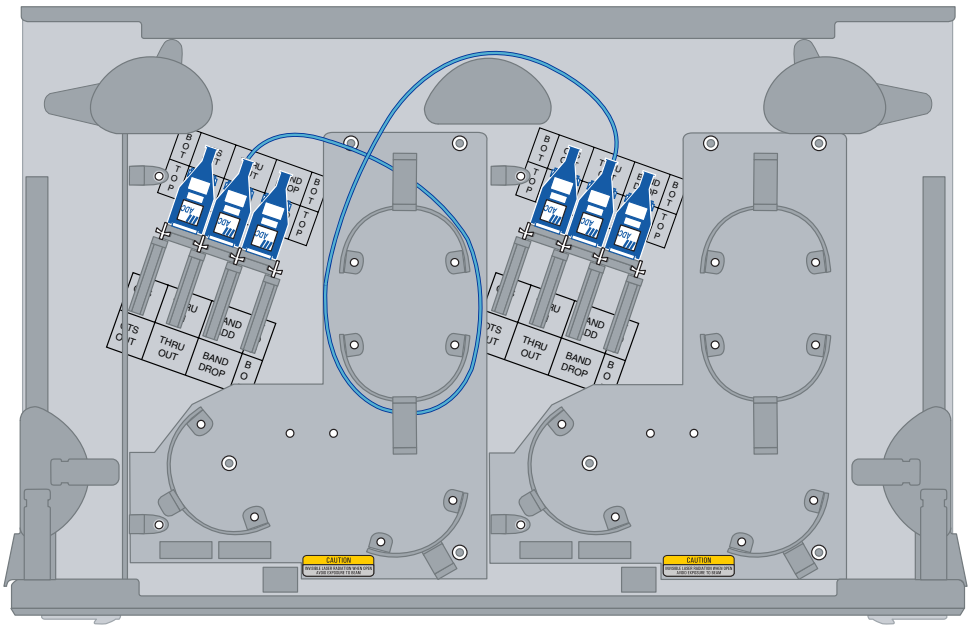

Procedure 3-3
Connecting OMXs to other optical components

Follow this procedure to connect OMXs to other components. This procedure refers only to the connections for the signals leaving the OMX. Refer to the figures in the chapter "Preparing to connect optical components" of this document for the types of components to which the OMXs must connect. Follow the procedures for connecting adjacent upstream components for signals that enter the OMX.

Requirements

Before you begin this procedure, make sure

- all connectors are clean. For information on cleaning, see "Cleaning connectors" in *Installing Optical Metro 5200 Shelves and Components*, 323-1701-201.
- you have completed all installation procedures
- if you are not connecting an OMX ITU CWDM (without pass-through), you have reviewed the "Guidelines for determining the east-most and west-most OMXs in a series of interconnected OMXs" in the "Preparing to connect optical components" chapter in part 1 of this document
- if you are connecting an OMX or an OMX ITU CWDM (with pass-through) to an ECT or C&L splitter/coupler, you have reviewed the "Guidelines for implementing straddled and bookended configurations for ECTs and C&L splitter/couplers" in the "Preparing to connect optical components" chapter in part 1 of this document
- if you are not connecting an OMX ITU CWDM (without pass-through), you have completed the procedure "Connecting multiple OMXs in a series" on page 3-9 or "Connecting east and west OMX modules in the same drawer" on page 3-22 to connect all of the OMXs at the site.
- you are familiar with the methods to access connectors in the components you are connecting. Refer to "Accessing internal connectors" in part 1 of this document.
- you are familiar with fiber routing procedures. For fiber routing procedures for 5200 shelf components, refer to the "Fiber management"chapter in *Installing Optical Metro 5200 Shelves and Components*, 323-1701-201. For fiber routing procedures for 5100 shelf components, refer to the "Fiber management" chapter in *Installing Optical Metro 5100 Shelves and Components*, 323-1701-210.
- you refer to the following tables to determine the connections you must make according to your site type.

—continued—

Procedure 3-3 (continued)
Connecting OMXs to other optical components

Table 3-14 is a summary of the tables in this procedure.

Table 3-14
Summary table

OMX fibering method for	Table
Unamplified sites	Table 3-15 on page 3-29
Pre-amplified sites	Table 3-17 on page 3-31
Post-amplified sites	Table 3-18 on page 3-31
Pre-amplified and post-amplified sites	Table 3-19 on page 3-32
Note: Only Table 3-16 on page 3-30, Unamplified sites with OMX 16CH DWDM supports OMX 16CH DWDM.	

Table 3-15
OMX connections for unamplified sites

west to east connections			
From	**To**		
OMX (1st east-facing)	**OSC tray (east)**	**C&L s/c (east)**	**1310 nm s/c (east)**
OTS OUT	THRU IN	C&L IN	THRU IN
east to west connections			
From	**To**		
OMX (1st west-facing)	**OSC tray (west)**	**C&L s/c (west)**	**1310 nm s/c (west)**
OTS OUT	THRU IN	C&L IN	THRU IN

—continued—

Procedure 3-3 (continued)
Connecting OMXs to other optical components

Table 3-16
OMX connections for unamplified sites with OMX 16CH DWDM

west to east connections		
From	**To**	
OMX 16CH DWDM (C-band) (1st east-facing)	**OSC tray (east)**	**1310 nm s/c (east)**
OTS OUT	THRU IN	THRU IN
east to west connections		
From	**To**	
OMX 16CH DWDM (C-band) (1st west-facing)	**OSC tray (west)**	**1310 nm s/c (west)**
OTS OUT	THRU IN	THRU IN

—continued—

Procedure 3-3 (continued)
Connecting OMXs to other optical components

Table 3-17
OMX connections for pre-amplified sites

west to east connections				
From	**To**			
OMX (1st east-facing)	**OSC tray (east)**	**ECT (east)**	**ECT (west)**	**C&L s/c (east)**
OTS OUT	THRU IN	C&L IN *	C&L IN **	C&L IN *
east to west connections				
From	**To**			
OMX (1st west-facing)	**OSC tray (west)**	**ECT (west)**	**ECT (east)**	**C&L s/c (west)**
OTS OUT	THRU IN	C&L IN *	C&L IN **	C&L IN *
*for bookended parallel configurations or parallel using distributed equalization (C&L) **for straddled parallel configurations				

Table 3-18
OMX connections for post-amplified sites

west to east connections						
From	**To**					
OMX (1st east-facing)	**ECT (west)**	**C&L s/c (west)**	**PBE**	**APBE**	**Discrete VOA**	**OFA**
OTS OUT	OTS IN	OTS IN	C&L BAND IN	IN	VOA A/B IN	IN (see Note)
east to west connections						
From	**To**					
OMX (1st west-facing)	**ECT (east)**	**C&L s/c (east)**	**PBE**	**APBE**	**Discrete VOA**	**OFA**
OTS OUT	OTS IN	OTS IN	C&L BAND IN	IN	VOA A/B IN	IN (see Note)
Note: Run the patch cord to the OFA slot position but do not connect it to the OFA IN port. You will connect the patch cord to the OFA IN port during the equalization procedures.						

—continued—

Procedure 3-3 (continued)
Connecting OMXs to other optical components

Table 3-19
OMX connections for pre-amplified and post-amplified sites

west to east connections			
From	**To**		
OMX (1st east-facing)	**PBE (east-most)**	**APBE (east-most)**	**Discrete VOA**
OTS OUT	C&L BAND IN	IN	VOA A/B IN
east to west connections			
From	**To**		
OMX (1st west-facing)	**PBE (west-most)**	**APBE (west-most)**	**Discrete VOA**
OTS OUT	C&L BAND IN	IN	VOA A/B IN

Table 3-20 lists the tools and materials you require to complete this procedure.

Table 3-20
Required tools and materials

Item	**Quantity**	**Supplied**
Antistatic wrist and heel straps	1	no
Fiber-optic cleaning kit	1	no
Fiber inspection scope	1	no
Phillips #1 screwdriver required only if OMX type is DWDM (Standard)	1	no
Phillips #2 screwdriver required only if OMX type is OMX 16CH DWDM	1	no
SC-SC Optical patch cords (see Note) (except when you connect to an APBE circuit pack)	as required	no
SC-LC Optical patch cords (see Note) (when you connect to an APBE circuit pack)	as required	no
Note: Refer to "Fiber-optic patch cords" on page 13-97 in *Network Planning and Link Engineering*, 323-1701-110.		

—continued—

Procedure 3-3 (continued)
Connecting OMXs to other optical components

Precautions

DANGER
Invisible laser radiation
The Optical Metro 5100/5200 operates up to a Hazard Level of k x 3A (IEC 60825-2:2000) or 1M (IEC 60825-2:2004). Use only viewing instruments with proper optical attenuation.

CAUTION
Risk of affecting network reliability
Make sure that all connectors are cleaned before you make the connections (or re-connections) described in this procedure. For cleaning information, see the chapter "Cleaning connectors", in *Installing Optical Metro 5200 Shelves and Components*, 323-1701-201.

CAUTION
Possible risk of damage to equipment and fiber
Make sure that the bulkhead connectors are lowered and snapped into place before you close the drawers. In the case of an OMX 16CH DWDM, make sure that the sliders are pushed fully to the rear before closing the front cover. Failure to do so could cause damage to the connector unit, the fibers attached to the connector unit, or both.

Observe the minimum bend radius of 1.18 inches (30 mm) for the patch cords. Always use the fiber management components in the drawer to route the fiber.

Allow for sufficient slack in the fibers that enter and exit the drawers. If sufficient slack is not left, the fibers can become stretched and damaged when the drawer is opened.

—continued—

Procedure 3-3 (continued)
Connecting OMXs to other optical components

Action

Step	Action
1	Refer to the tables at the beginning of this procedure to determine the connections you must make.
2	Locate the first east-facing or west-facing OMX in the series and the other applicable component in the rack. Refer to the chapter "Accessing internal connectors" in part 1 of this document to access the connectors.
3	Connect one end of a patch cord to make the optical connections from the OMX.
4	Route the fiber.
5	**If** you are connecting to / **Then** go to an OFA / step 8 any other component / step 6
6	Connect the other end of the patch cord to complete the optical connection to the other component.
7	Go to step 9.
8	Run the other end of the patch cord to the OFA slot position but do not connect it to the OFA IN port. You will connect the patch cord to the OFA IN port during the equalization procedures.
9	Close the component drawers.

—end—

Procedure 3-4
Connecting OMX 16CH DWDM (C Band) to OMX 16CH DWDM (L Band)

Follow this procedure to connect OMX 16CH DWDM (C Band) to OMX 16CH DWDM (L Band). Refer to the figures in the chapter "Preparing to connect optical components" of this document for the types of components to which the OMXs must connect.

> ***Note:*** Deploy all channels of the OMX 16CH DWDM (C Band) before adding the OMX 16CH DWDM (L Band).

Requirements

Before you begin this procedure, make sure

- all connectors are clean. For information on cleaning, see "Cleaning connectors" in *Installing Optical Metro 5200 Shelves and Components*, 323-1701-201.
- you have completed all installation procedures.
- you are familiar with the methods to access connectors in the components you are connecting. Refer to "Accessing internal connectors" in part 1 of this document.
- you are familiar with fiber routing procedures. For fiber routing procedures for 5200 shelf components, refer to the "Fiber management"chapter in *Installing Optical Metro 5200 Shelves and Components*, 323-1701-201.
- you refer Table 3-21 on page 3-36 to determine the connections you must make.

—continued—

Procedure 3-4 (continued)
Connecting OMX 16CH DWDM (C Band) to OMX 16CH DWDM (L Band)

Table 3-21
C to L band connections for unamplified sites with OMX 16CH DWDM

Transmit	
From	**To**
OMX 16CH DWDM (C-band)	**OMX 16CH DWDM (L-band)**
L-Band OUT	OTS IN
Receive	
From	**To**
OMX 16CH DWDM (C-band)	**OMX 16CH DWDM (L-band)**
L-Band IN	OTS OUT

Table 3-22 lists the tools and materials you require to complete this procedure.

Table 3-22
Required tools and materials

Item	**Quantity**	**Supplied**
Antistatic wrist and heel straps	1	no
Fiber-optic cleaning kit	1	no
Fiber inspection scope	1	no
Phillips #2 screwdriver	1	no
LC-LC Optical patch cords (see Note 1 and Note 2)	as required	no
SC-LC Optical patch cords (see Note 1 and Note 2)	as required	no
Note 1: Refer to "Fiber-optic patch cords" on page 13-97 in *Network Planning and Link Engineering*, 323-1701-110. ***Note 2:*** LC-LC patch cords are required unless you are using a patch panel to store the extra length. If this is the case, you will need SC- LC patch cords.		

—continued—

Procedure 3-4 (continued)
Connecting OMX 16CH DWDM (C Band) to OMX 16CH DWDM (L Band)

Precautions

DANGER
Invisible laser radiation
The Optical Metro 5100/5200 operates up to a Hazard Level of k x 3A (IEC 60825-2:2000) or 1M (IEC 60825-2:2004). Use only viewing instruments with proper optical attenuation.

CAUTION
Risk of affecting network reliability
Make sure that all connectors are cleaned before you make the connections (or re-connections) described in this procedure. For cleaning information, see the chapter "Cleaning connectors", in *Installing Optical Metro 5200 Shelves and Components*, 323-1701-201.

CAUTION
Possible risk of damage to equipment and fiber
Make sure that the sliders are pushed fully to the rear before closing the front cover. Failure to do so could cause damage to the connector unit, the fibers attached to the connector unit, or both.

Observe the minimum bend radius of 1.18 inches (30 mm) for the patch cords. Always use the fiber management components in the drawer to route the fiber.

Allow for sufficient slack in the fibers that enter and exit the drawers. If sufficient slack is not left, the fibers can become stretched and damaged when the drawer is opened.

—continued—

Procedure 3-4 (continued)
Connecting OMX 16CH DWDM (C Band) to OMX 16CH DWDM (L Band)

Action

Step	Action
1	Refer to Table 3-21 on page 3-36 to determine the connections you must make.
2	Locate the OMX 16CH DWDM (C Band) and OMX 16CH DWDM (L Band) and open the front covers.
3	Pull out the slider adapter labeled L-BAND IN/OUT on the OMX 16CH DWDM (C Band). Refer to the chapter "Accessing internal connectors" in part 1 of this document to access the connectors.
4	Pull out the slider labeled OTS IN/OUT on the OMX 16CH DWDM (L Band).
5	Obtain two optical patch cords.
6	Remove the connector dust cover.
7	Connect one end of the optical patch cords to the L-Band OUT and L-Band IN ports on the OMX 16CH DWDM (C Band).
8	Route the fiber.
9	Connect the other ends of the optical patch cords to the OTS IN and OTS OUT ports on the OMX 16CH DWDM (L Band). Refer to Table 3-21 on page 3-36 for connection details.
10	Re-insert the slider adapters fully.
11	Close OMX 16CH DWDM front covers.

—end—

Procedure 3-5
Connecting C&L splitter/couplers

Follow this procedure to connect C&L splitter/couplers to other components. This procedure refers only to the connections for the signals leaving the C&L splitter/couplers. Refer to the figures in the chapter "Preparing to connect optical components" of this document for the types of components that the C&L splitter/couplers need to connect to. Follow procedures for connecting adjacent upstream components for signals entering the C&L splitter/couplers.

Requirements

Before you begin this procedure make sure

- all connectors are clean. For information on cleaning, see "Cleaning connectors" in *Installing Optical Metro 5200 Shelves and Components*, 323-1701-201.
- you have completed all installation procedures.
- if you are connecting to a series of OMXs, you know the east-most and west-most OMX. Refer to "Guidelines for determining the east-most and west-most OMXs in a series of interconnected OMXs" in the "Preparing to connect optical components" chapter in part 1 of this document.
- you know whether the configuration for the C&L splitter/coupler is straddled or bookended. Bookended configurations use two different C&L splitter/couplers. Straddled configurations use one C&L splitter coupler. Refer to "Guidelines for implementing straddled and bookended configurations for ECTs and C&L splitter/couplers" in the "Preparing to connect optical components" chapter in part 1 of this document.
- you are familiar with the methods to access connectors in the components you are connecting. Refer to "Accessing internal connectors" in part 1 of this document.
- you are familiar with fiber routing procedures. For fiber routing procedures for 5200 shelf components, refer to the "Fiber management" chapter in *Installing Optical Metro 5200 Shelves and Components*, 323-1701-201. For fiber routing procedures for 5100 shelf components, refer to the "Fiber management"chapter in *Installing Optical Metro 5100 Shelves and Components*, 323-1701-210.
- you refer to the following tables to determine the connections you must make according to your site type.

—continued—

Procedure 3-5 (continued)
Connecting C&L splitter/couplers

Table 3-23 is a summary of the tables in this procedure.

Table 3-23
Summary table

C&L splitter/coupler fibering method for	
Unamplified sites	Table 3-24 on page 3-40
Pre-amplified sites	Table 3-25 on page 3-41
Post-amplified sites	Table 3-26 on page 3-42
Pre-amplified and post-amplified sites	Table 3-27 on page 3-43
Standalone amplifier sites	Table 3-28 on page 3-44

Table 3-24
C&L splitter/coupler connections for unamplified sites

west to east connections		
From	**To**	
C&L s/c (west)	**OMX (1st west-facing)**	**OSC tray (east)**
C&L OUT	OTS IN	—
C&L s/c (east)		
OTS OUT	—	THRU IN
east to west connections		
From	**To**	
C&L s/c (east)	**OMX (1st east-facing)**	**OSC tray (west)**
C&L OUT	OTS IN	—
C&L s/c (west)		
OTS OUT	—	THRU IN

—continued—

Procedure 3-5 (continued)
Connecting C&L splitter/couplers

Table 3-25
C&L splitter/coupler connections for pre-amplified sites

west to east connections						
From	**To**					
C&L s/c (west)	**OMX (1st west-facing)**	**OSC tray (east)**	**PBE**	**APBE**	**Discrete VOA**	**OFA or OFA Filler card**
C&L OUT	—	—	C&L BAND IN	IN	VOA A/B IN	IN (see Note)
OTS OUT	OTS IN **	—	—	—	—	—
C&L s/c (east)						
OTS OUT	OTS IN *	THRU IN *	—	—	—	—
east to west connections						
From	**To**					
C&L s/c (east)	**OMX (1st east-facing)**	**OSC tray (west)**	**PBE**	**APBE**	**Discrete VOA**	**OFA or OFA Filler card**
C&L OUT	—	—	C&L BAND IN	IN	VOA A/B IN	IN (see Note)
OTS OUT	OTS IN **	—	—	—	—	—
C&L s/c (west)						
OTS OUT	OTS IN *	THRU IN *	—	—	—	—

*For bookended and parallel distributed equalization

**For straddled and serial distributed equalization

Note: Run the patch cord to the OFA slot position but do not connect it to the OFA IN port. You will connect the patch cord to the OFA IN port during the equalization procedures.

—continued—

Procedure 3-5 (continued)
Connecting C&L splitter/couplers

Table 3-26
C&L splitter/coupler connections for post-amplified sites

west to east connections						
From	**To**					
C&L s/c (west)	**OMX (1st west-facing)**	**OSC tray (east)**	**PBE**	**APBE**	**Discrete VOA**	**OFA or OFA Filler card**
C&L OUT	OTS IN	—	C&L BAND IN	IN	VOA A/B IN	IN (see Note)
C&L s/c (east)						
OTS OUT	—	THRU IN	—	—	—	—
east to west connections						
From	**To**					
C&L s/c (east)	**OMX (1st east-facing)**	**OSC tray (west)**	**PBE**	**APBE**	**Discrete VOA**	**OFA or OFA Filler card**
C&L OUT	OTS IN	—	C&L BAND IN	IN	VOA A/B IN	IN (see Note)
C&L s/c (west)						
OTS OUT	—	THRU IN	—	—	—	—
Note: Run the patch cord to the OFA slot position but do not connect it to the OFA IN port. You will connect the patch cord to the OFA IN port during the equalization procedures.						

—continued—

Procedure 3-5 (continued)
Connecting C&L splitter/couplers

Table 3-27
C&L splitter/coupler connections for pre-amplified and post-amplified sites

west to east connections				
From	**To**			
C&L s/c (west)	**OSC tray (east)**	**PBE (west-most)**	**APBE (west-most)**	**Discrete VOA**
C&L OUT	—	C&L BAND IN	IN	VOA A/B IN
C&L s/c (east)				
OTS OUT	THRU IN	—	—	—
east to west connections				
From	**To**			
C&L s/c (east)	**OSC tray (west)**	**PBE (east-most)**	**APBE (east-most)**	**Discrete VOA**
C&L OUT	—	C&L BAND IN	IN	VOA A/B IN
C&L s/c (west)				
OTS OUT	THRU IN	—	—	—

—continued—

Procedure 3-5 (continued)
Connecting C&L splitter/couplers

Table 3-28
C&L splitter/coupler connections for standalone amplifier sites

west to east connections					
From	**To**				
C&L s/c (west)	**OSC tray (east)**	**PBE**	**APBE**	**Discrete VOA**	**OFA or OFA Filler card**
C&L OUT	—	C&L BAND IN	IN	VOA A/B IN	IN (see Note)
OTS OUT	THRU IN **	—	—	—	—
C&L s/c (east)					
OTS OUT	THRU IN *	—	—	—	—
east to west connections					
From	**To**				
C&L s/c (east)	**OSC tray (west)**	**PBE**	**APBE**	**Discrete VOA**	**OFA or OFA Filler card**
C&L OUT	—	C&L BAND IN	IN	VOA A/B IN	IN (see Note)
OTS OUT	THRU IN **	—	—	—	—
C&L s/c (west)					
OTS OUT	THRU IN *	—	—	—	—

*for bookended configurations

**for straddled configurations

Note: Run the patch cord to the OFA slot position but do not connect it to the OFA IN port. You will connect the patch cord to the OFA IN port during the equalization procedures.

—continued—

Procedure 3-5 (continued)
Connecting C&L splitter/couplers

Table 3-29 lists the tools and materials you require to complete this procedure.

Table 3-29
Required tools and materials

Item	Quantity	Supplied
Antistatic wrist and heel straps	1	no
Fiber-optic cleaning kit	1	no
Fiber inspection scope	1	no
Phillips #1 screwdriver required only if connecting to DWDM OMX (Standard)	1	no
Phillips #2 screwdriver required only if OMX type is OMX 16CH DWDM	1	no
SC-SC Optical patch cords (see Note) (except when connecting to an APBE circuit pack)	as required	no
SC-LC Optical patch cords (see Note) (when connecting to an APBE circuit pack)	as required	no
Note: Refer to "Fiber-optic patch cords" on page 13-97 in *Network Planning and Link Engineering*, 323-1701-110.		

—continued—

Procedure 3-5 (continued)
Connecting C&L splitter/couplers

Precautions

DANGER
Invisible laser radiation
The Optical Metro 5100/5200 operates up to a Hazard Level of k x 3A (IEC 60825-2:2000) or 1M (IEC 60825-2:2004). Use only viewing instruments with proper optical attenuation.

CAUTION
Risk of affecting network reliability
Make sure that all connectors are cleaned before you make the connections (or re-connections) described in this procedure. For cleaning information, see the chapter "Cleaning connectors", in *Installing Optical Metro 5200 Shelves and Components*, 323-1701-201.

CAUTION
Possible risk of damage to equipment and fiber
Make sure that the bulkhead connectors are lowered and snapped into place before you close the drawers. Failure to do so can cause damage to the connector unit, the fibers attached to the connector unit, or both.

Observe the minimum bend radius of 1.18 inches (30 mm) for the patch cords. Always use the fiber management components in the drawer to route the fiber.

Allow for sufficient slack in the fibers that enter and exit the drawers. If sufficient slack is not left, the fibers can become stretched and damaged when the drawer is opened.

—continued—

Procedure 3-5 (continued)
Connecting C&L splitter/couplers

Action

Step	Action
1	Refer to the tables at the beginning of this procedure to determine the connections you must make.
2	Locate the C&L splitter/coupler and the other applicable components in the rack. Refer to the chapter "Accessing internal connectors" in part 1 of this document to access the connectors.
3	Connect one end of a patch cord to make the optical connection from the C&L splitter/coupler.
4	Route the fiber.
5	**If** you are connecting to — **Then** go to an OFA — step 8 any other component — step 6
6	Connect the other end of the patch cord to complete the optical connection to the other component.
7	Go to step 9.
8	Run the other end of the patch cord to the OFA slot position but do not connect it to the OFA IN port. This will be done during the equalization procedures.
9	Close the component drawers.

—end—

Procedure 3-6
Connecting 1310 nm splitter/couplers

Follow this procedure to connect 1310 nm splitter/couplers to other components. This procedure refers only to the connections for the signals leaving the 1310 nm splitter/couplers. Refer to the figures in the chapter "Preparing to connect optical components" of this document for the types of components that the 1310 nm splitter/couplers need to connect to. Follow procedures for connecting adjacent upstream components for signals entering the 1310 nm splitter/couplers.

Requirements

Before you begin this procedure make sure

- all connectors are clean. For information on cleaning, see "Cleaning connectors" in *Installing Optical Metro 5200 Shelves and Components*, 323-1701-201.
- you have completed all installation procedures.
- you are familiar with the methods to access connectors in the components you are connecting. Refer to "Accessing internal connectors" in part 1 of this document.
- you are familiar with fiber routing procedures. For fiber routing procedures for 5200 shelf components, refer to the "Fiber management"chapter in *Installing Optical Metro 5200 Shelves and Components*, 323-1701-201. For fiber routing procedures for 5100 shelf components, refer to the "Fiber management" chapter in *InstallingOptical Metro 5100 Shelves and Components*, 323-1701-210.
- you refer to Table 3-30 to determine the connections you must make.

—continued—

Procedure 3-6 (continued)
Connecting 1310 nm splitter/couplers

Table 3-30
1310 nm splitter/coupler connections

west to east connections	
From	**To**
1310 nm s/c (west)	**OMX (west-facing)**
THRU OUT	OTS IN
east to west connections	
From	**To**
1310 nm s/c (east)	**OMX (east-facing)**
THRU OUT	OTS IN

Table 3-31 lists the tools and materials you require to complete this procedure.

Table 3-31
Required tools and materials

Item	**Quantity**	**Supplied**
Antistatic wrist and heel straps	1	no
Fiber-optic cleaning kit	1	no
Fiber inspection scope	1	no
SC-SC Optical patch cords (see Note)	as required	no
Note: Refer to "Fiber-optic patch cords" on page 13-97 in *Network Planning and Link Engineering*, 323-1701-110.		

—continued—

Procedure 3-6 (continued)
Connecting 1310 nm splitter/couplers

Precautions

DANGER
Invisible laser radiation
The Optical Metro 5100/5200 operates up to a Hazard Level of k x 3A (IEC 60825-2:2000) or 1M (IEC 60825-2:2004). Use only viewing instruments with proper optical attenuation.

CAUTION
Risk of affecting network reliability
Make sure that all connectors are cleaned before you make the connections (or re-connections) described in this procedure. For cleaning information, see the chapter "Cleaning connectors", in *Installing Optical Metro 5200 Shelves and Components*, 323-1701-201.

CAUTION
Possible risk of damage to equipment and fiber
Make sure that the bulkhead connectors are lowered and snapped into place before you close the drawers. Failure to do so can cause damage to the connector unit, the fibers attached to the connector unit, or both.

Observe the minimum bend radius of 1.18 inches (30 mm) for the patch cords. Always use the fiber management components in the drawer to route the fiber.

Allow for sufficient slack in the fibers that enter and exit the drawers. If sufficient slack is not left, the fibers can become stretched and damaged when the drawer is opened.

—continued—

Procedure 3-6 (continued)
Connecting 1310 nm splitter/couplers

Action

Step	Action
1	Refer to Table 3-30 to determine the connections you must make.
2	Locate the 1310 nm splitter/coupler and the other applicable components in the rack. Refer to the chapter "Accessing internal connectors" in part 1 of this document to access the connectors.
3	Connect one end of a patch cord to make the optical connection from the 1310 nm splitter/coupler.
4	Route the fiber.
5	Connect the other end of the patch cord to complete the optical connection to the other component.
6	Close the component drawers.

—end—

Procedure 3-7
Connecting ECTs

Follow this procedure to connect ECTs to other components. This procedure refers only to the connections for the signals leaving the ECTs. Refer to the figures in the chapter "Preparing to connect optical components" of this document for the types of components that the ECTs need to connect to. Follow procedures for connecting adjacent upstream components for signals entering the ECTs.

Requirements

Before you begin this procedure make sure

- all connectors are clean. For information on cleaning, see "Cleaning connectors" in *Installing Optical Metro 5200 Shelves and Components*, 323-1701-201.
- you have completed all installation procedures.
- if you are connecting to a series of OMXs, you know the east-most and west-most OMX. Refer to "Guidelines for determining the east-most and west-most OMXs in a series of interconnected OMXs" in the "Preparing to connect optical components" chapter in part 1 of this document.
- you know whether the configuration for the ECT is straddled or bookended. Refer to "Guidelines for implementing straddled and bookended configurations for ECTs and C&L splitter/couplers" in the "Preparing to connect optical components" chapter in part 1 of this document.
- you are familiar with the guidelines for labeling the fibers and cables in an OFA installation kit. Refer to "Guidelines for labeling the fibers and cables in an OFA installation kit" in the "Fiber management" chapter in *Installing Optical Metro 5200 Shelves and Components*, 323-1701-201.
- you are familiar with the methods to access connectors in the components you are connecting. Refer to "Accessing internal connectors" in part 1 of this document.
- you are familiar with fiber routing procedures. For fiber routing procedures for 5200 shelf components, refer to the "Fiber management"chapter in *Installing Optical Metro 5200 Shelves and Components*, 323-1701-201. For fiber routing procedures for 5100 shelf components, refer to the "Fiber management" chapter in *Installing Optical Metro 5100 Shelves and Components*, 323-1701-210.
- you refer to the following tables to determine the connections you must make according to your site type.

—continued—

Procedure 3-7 (continued)
Connecting ECTs

Table 3-32 is a summary of the tables in this procedure.

Table 3-32
Summary table

ECT fibering method for	Table
Pre-amplified sites	Table 3-33 on page 3-53
Post-amplified sites	Table 3-34 on page 3-54
Standalone amplifier sites	Table 3-35 on page 3-55
Pre-amplified and post-amplified sites	Table 3-36 on page 3-56

Table 3-33
ECT connections for pre-amplified sites

west to east connections			
From	**To**		
ECT (west)	**OSC tray (east)**	**OFA or OFA Filler card**	**OMX (1st west-facing)**
C&L OUT	—	IN (see Note)	—
OTS OUT	THRU IN **	—	OTS IN **
ECT (east)			
OTS OUT	THRU IN *	—	—
east to west connections			
From	**To**		
ECT (east)	**OSC tray (west)**	**OFA or OFA Filler card**	**OMX (1st east-facing)**
C&L OUT	—	IN (see Note)	—
OTS OUT	THRU IN **	—	OTS IN **
ECT (west)			
OTS OUT	THRU IN *	—	—

*for bookended configurations

**for straddled configurations

Note: Run the patch cord to the OFA slot position but do not connect it to the OFA IN port. You will connect the patch cord to the OFA IN port during the equalization procedures.

—continued—

Procedure 3-7 (continued)
Connecting ECTs

Table 3-34
ECT connections for post-amplified sites

west to east connections		
From	**To**	
ECT (west)	**OSC tray (east)**	**OFA or OFA Filler card**
C&L OUT	—	IN (see Note)
OTS OUT	THRU IN	—
east to west connections		
From	**To**	
ECT (east)	**OSC tray (west)**	**OFA or OFA Filler card**
C&L OUT	—	IN (see Note)
OTS OUT	THRU IN	—
Note: Run the patch cord to the OFA slot position but do not connect it to the OFA IN port. You will connect the patch cord to the OFA IN port during the equalization procedures.		

—continued—

Procedure 3-7 (continued)
Connecting ECTs

Table 3-35
ECT connections for standalone amplifier sites

west to east connections		
From	**To**	
ECT (west)	**OSC tray (east)**	**OFA or OFA Filler card**
C&L OUT	—	IN (see Note)
OTS OUT	THRU IN **	—
ECT (east)		
OTS OUT	THRU IN *	—
east to west connections		
From	**To**	
ECT (east)	**OSC tray (west)**	**OFA or OFA Filler card**
C&L OUT	—	IN (see Note)
OTS OUT	THRU IN **	—
ECT (west)		
OTS OUT	THRU IN *	—

*for bookended configurations

**for straddled configurations

Note: Run the patch cord to the OFA slot position but do not connect it to the OFA IN port. You will connect the patch cord to the OFA IN port during the equalization procedures.

—continued—

Procedure 3-7 (continued)
Connecting ECTs

Table 3-36
ECT connections for pre-amplified and post-amplified sites

west to east connections		
From	**To**	
ECT (west)	**OSC tray (east)**	**OFA or OFA Filler card**
C&L OUT	—	IN (see Note)
ECT (east)		
OTS OUT	THRU IN	—
east to west connections		
From	**To**	
ECT (east)	**OSC tray (west)**	**OFA or OFA Filler card**
C&L OUT	—	IN (see Note)
ECT (west)		
OTS OUT	THRU IN	—
Note: Run the patch cord to the OFA slot position but do not connect it to the OFA IN port. You will connect the patch cord to the OFA IN port during the equalization procedures.		

—continued—

Procedure 3-7 (continued)
Connecting ECTs

Table 3-37 lists the tools and materials you require to complete this procedure.

Table 3-37
Required tools and materials

Item	Quantity	Supplied
Antistatic wrist and heel straps	1	no
Fiber-optic cleaning kit	1	no
Fiber inspection scope	1	no
Phillips #1 screwdriver required only if connecting to DWDM OMX (Standard)	1	no
Phillips #2 screwdriver required only if OMX type is OMX 16CH DWDM	1	no
SC-SC Optical patch cords (see Note)	as required	no
Note: Refer to "Fiber-optic patch cords" on page 13-97 in *Network Planning and Link Engineering*, 323-1701-110.		

—continued—

Procedure 3-7 (continued)
Connecting ECTs

Precautions

DANGER
Invisible laser radiation
The Optical Metro 5100/5200 operates up to a Hazard Level of k x 3A (IEC 60825-2:2000) or 1M (IEC 60825-2:2004). Use only viewing instruments with proper optical attenuation.

CAUTION
Risk of affecting network reliability
Make sure that all connectors are cleaned before you make the connections (or re-connections) described in this procedure. For cleaning information, see the chapter "Cleaning connectors", in *Installing Optical Metro 5200 Shelves and Components*, 323-1701-201.

CAUTION
Possible risk of damage to equipment and fiber
Make sure that the bulkhead connectors are lowered and snapped into place before you close the drawers. Failure to do so can cause damage to the connector unit, the fibers attached to the connector unit, or both.

Observe the minimum bend radius of 1.18 inches (30 mm) for the patch cords. Always use the fiber management components in the drawer to route the fiber.

Allow for sufficient slack in the fibers that enter and exit the drawers. If sufficient slack is not left, the fibers can become stretched and damaged when the drawer is opened.

—continued—

Procedure 3-7 (continued)
Connecting ECTs

Action

Step	Action
1	Refer to the tables at the beginning of this procedure to determine the connections you must make.
2	Locate the ECT and the other applicable component in the rack. Refer to the chapter "Accessing internal connectors" in part 1 of this document to access the connectors.
3	Connect one end of a patch cord to make the optical connection from the ECT.
4	Route the fiber.
5	**If** you are connecting to / **Then** go to an OFA / step 8 any other component / step 6
6	Connect the other end of the patch cord to complete the optical connection to the other component.
7	Go to step 9.
8	Run the other end of the patch cord to the OFA slot position but do not connect it to the OFA IN port. You will connect the patch cord to the OFA IN port during the equalization procedures.
9	Close the component drawers.

—end—

Procedure 3-8
Connecting PBEs

Follow this procedure to connect the per band equalizer (PBE) to OFA circuit packs, OFA filler cards or DSCMs. This procedure refers only to the connections for the signals that leave the PBEs. Follow the procedures for connecting adjacent upstream components for signals that enter the PBEs.

The PBE does not contain a filter to split the C-band from the L-band. If the network carries both C-band and L-band traffic on the same fiber, you must have a C&L splitter/coupler installed to separate the bands before the signal reaches the PBE. If the network is C-band only, or L-band only, you do not need a C&L splitter coupler.

Requirements

Before you begin this procedure make sure

- all connectors are clean. For information on cleaning, see "Cleaning connectors" in *Installing Optical Metro 5200 Shelves and Components*, 323-1701-201.
- you have completed all installation procedures.
- you are familiar with the methods to access connectors in the components you are connecting. Refer to "Accessing internal connectors" in part 1 of this document.
- you are familiar with fiber routing procedures. For fiber routing procedures for 5200 shelf components, refer to the "Fiber management" chapter in *Installing Optical Metro 5200 Shelves and Components*, 323-1701-201. For fiber routing procedures for 5100 shelf components, refer to the "Fiber management"chapter in *Installing Optical Metro 5100 Shelves and Components*, 323-1701-210.
- you refer to Table 3-38 to determine the connections you must make according to your site type.

—continued—

Procedure 3-8 (continued)
Connecting PBEs

Table 3-38
PBE connections for all site types

west to east connections		
From	**To**	
PBE	**OFA or OFA Filler card**	**DSCM**
C&L BAND OUT	IN (see Note)	IN
east to west connections		
From	**To**	
PBE	**OFA or OFA Filler card**	**DSCM**
C&L BAND OUT	IN (see Note)	IN
Note: Run the patch cord to the OFA slot position but do not connect it to the OFA IN port. You will connect the patch cord to the OFA IN port during the equalization procedures.		

Table 3-39 lists the tools and materials you require to complete this procedure.

Table 3-39
Required tools and materials

Item	Quantity	Supplied
Antistatic wrist and heel straps	1	no
Fiber-optic cleaning kit	1	no
Fiber inspection scope	1	no
SC-SC Optical patch cords (see Note)	as required	no
Note: Refer to "Fiber-optic patch cords" on page 13-97 in *Network Planning and Link Engineering*, 323-1701-110.		

—continued—

Procedure 3-8 (continued)
Connecting PBEs

Precautions

DANGER
Invisible laser radiation
The Optical Metro 5100/5200 operates up to a Hazard Level of k x 3A (IEC 60825-2:2000) or 1M (IEC 60825-2:2004). Use only viewing instruments with proper optical attenuation.

CAUTION
Risk of affecting network reliability
Make sure that all connectors are cleaned before you make the connections (or re-connections) described in this procedure. For cleaning information, see the chapter "Cleaning connectors", in *Installing Optical Metro 5200 Shelves and Components*, 323-1701-201.

CAUTION
Possible risk of damage to equipment and fiber
Make sure that the bulkhead connectors are lowered and snapped into place before you close the drawers. Failure to do so can cause damage to the connector unit, the fibers attached to the connector unit, or both.

Observe the minimum bend radius of 1.18 inches (30 mm) for the patch cords. Always use the fiber management components in the drawer to route the fiber.

Allow for sufficient slack in the fibers that enter and exit the drawers. If sufficient slack is not left, the fibers can become stretched and damaged when the drawer is opened.

—continued—

Procedure 3-8 (continued)
Connecting PBEs

Action

Step	Action
1	Refer to Table 3-38 to determine the connections you must make.
2	Locate the PBE and the applicable OFA or DSCM in the rack, and refer to the chapter "Accessing internal connectors" in part 1 of this document to access the connectors.
3	Connect one end of a patch cord to make the optical connection from the PBE.
4	Route the fiber.
5	**If** you are connecting to / **Then** go to an OFA / step 8 an OFA filler or DSCM / step 6
6	Run the other end of the patch cord to the OFA filler card or DSCM and connect it to the IN port.
7	Go to step 9.
8	Run the other end of the patch cord to the OFA slot position but do not connect it to the OFA IN port. This will be done during the equalization procedures.
9	Close the PBE drawer.

—end—

Procedure 3-9
Connecting APBEs

Follow this procedure to connect the APBE circuit pack to the OFA circuit pack or to the DSCM. This procedure refers only to the connections for the signals that leave the APBEs. Follow the procedures for connecting adjacent upstream components for signals that enter the APBEs.

Requirements

Before you begin this procedure make sure

- all connectors are clean. For information on cleaning, see "Cleaning connectors" in *Installing Optical Metro 5200 Shelves and Components*, 323-1701-201.
- you have completed all installation procedures.
- you have installed a Fiber Manager (you must use the Fiber Manager to route the slack fiber from the patch cords that connect the APBE to the OFA circuit pack or DSCM).

  Note: The Fiber Manager is not needed when using the NT0H4327 optical patch cord to connect the APBE to the OFA circuit pack. This optical patch cord can only be used when the APBE circuit pack is equipped immediately to the right of the OFA circuit pack. For example, if the OFA circuit pack is in slots 1-4, then the APBE circuit pack must be equipped in slots 5-6. Also, if the OFA circuit pack is in slots 11-14, then the APBE circuit pack must be equipped in slots 15-16.

- you are familiar with guidelines for routing fiber in the Fiber Manager. Refer to "Guidelines for implementing straddled and bookended configurations for ECTs and C&L splitter/couplers" in the "Preparing to connect optical components" chapter in part 1 of this document.
- you are familiar with fiber routing procedures. For fiber routing procedures for 5200 shelf components, refer to the "Fiber management"chapter in *Installing Optical Metro 5200 Shelves and Components*, 323-1701-201. For fiber routing procedures for 5100 shelf components, refer to the "Fiber management"chapter in *Installing Optical Metro 5100 Shelves and Components*, 323-1701-210.
- you refer to Table 3-40 to determine the connections you must make according to your site type.

—continued—

Procedure 3-9 (continued)
Connecting APBEs

Table 3-40
APBE connections for all site types

west to east connections		
From	**To**	
APBE	**OFA**	**DSCM**
OUT	IN	IN
east to west connections		
From	**To**	
APBE	**OFA**	**DSCM**
OUT	IN	IN

Table 3-41 lists the tools and materials you require to complete this procedure.

Table 3-41
Required tools and materials

Item	Quantity	Supplied
Antistatic wrist and heel straps	1	no
Fiber-optic cleaning kit	1	no
Fiber inspection scope	1	no
Fiber Manager (see Note 1)	as required	no
LC-SC Optical patch cord (see Note 2)	as required	no

Note 1: The Fiber Manager is not needed when using the NT0H4327 optical patch cord to connect the APBE to the OFA circuit pack. This optical patch cord can only be used when the APBE circuit pack is equipped immediately to the right of the OFA circuit pack. For example, if the OFA circuit pack is in slots 1-4, then the APBE circuit pack must be equipped in slots 5-6. Also, if the OFA circuit pack is in slots 11-14, then the APBE circuit pack must be equipped in slots 15-16.

Note 2: Refer to "Fiber-optic patch cords" on page 13-97 *Network Planning and Link Engineering*, 323-1701-110.

—continued—

Procedure 3-9 (continued)
Connecting APBEs

Precautions

DANGER
Invisible laser radiation
The Optical Metro 5100/5200 operates up to a Hazard Level of k x 3A (IEC 60825-2:2000) or 1M (IEC 60825-2:2004). Use only viewing instruments with proper optical attenuation.

CAUTION
Risk of affecting network reliability
Make sure that all connectors are cleaned before you make the connections (or re-connections) described in this procedure. For cleaning information, see the chapter "Cleaning connectors", in *Installing Optical Metro 5200 Shelves and Components*, 323-1701-201.

CAUTION
Possible risk of damage to equipment and fiber
Make sure that the bulkhead connectors are lowered and snapped into place before you close the drawers. Failure to do so can cause damage to the connector unit, the fibers attached to the connector unit, or both.

Observe the minimum bend radius of 1.18 inches (30 mm) for the patch cords. Always use the fiber management components in the drawer to route the fiber.

Allow for sufficient slack in the fibers that enter and exit the drawers. If sufficient slack is not left, the fibers can become stretched and damaged when the drawer is opened.

—continued—

Procedure 3-9 (continued)
Connecting APBEs

Action

Step	Action
1	Refer to Table 3-40 to determine the connections you must make.
2	Locate the APBE and the applicable OFA or DSCM in the rack.
3	Connect the LC end of a LC-SC patch cord to make the optical connection from the APBE.
4	Route the slack fiber through the Fiber Manager. ***Note:*** The Fiber Manager is not needed when using the NT0H4327 optical patch cord to connect the APBE to the OFA circuit pack. This optical patch cord can only be used when the APBE circuit pack is equipped immediately to the right of the OFA circuit pack. For example, if the OFA circuit pack is in slots 1-4, then the APBE circuit pack must be equipped in slots 5-6. Also, if the OFA circuit pack is in slots 11-14, then the APBE circuit pack must be equipped in slots 15-16.
5	Connect the SC end of the LC-SC patch cord to the OFA or DSCM to complete the optical connection.

—end—

Procedure 3-10
Connecting Discrete VOAs

Follow this procedure to connect the discrete variable optical attenuator (VOA) to OFA circuit packs, OFA filler cards or DSCMs. This procedure refers only to the connections for the signals that leave the Discrete VOAs. Follow the procedures for connecting adjacent upstream components for signals that enter the Discrete VOAs.

The Discrete VOA does not contain a filter to split the C-band from the L-band. If the network carries both C-band and L-band traffic on the same fiber, you must have a C&L splitter/coupler installed to separate the bands before the signal reaches the Discrete VOA. If the network is C-band only, or L-band only, you do not need a C&L splitter coupler.

> ***Note:*** The OFA VGA has an integrated eVOA (electrically controlled variable optical attenuator). For this reason, a VOA is not required when an OFA VGA is used. An equalizer (PBE, APBE) may still be required.

Requirements

Before you begin this procedure make sure

- all connectors are clean. For information on cleaning, see "Cleaning connectors" in *Installing Optical Metro 5200 Shelves and Components*, 323-1701-201.
- you have completed all installation procedures.
- you are familiar with the methods to access connectors in the components you are connecting. Refer to "Accessing internal connectors" in part 1 of this document.
- you are familiar with fiber routing procedures. For fiber routing procedures for 5200 shelf components, refer to the "Fiber management" chapter in *Installing Optical Metro 5200 Shelves and Components*, 323-1701-201. For fiber routing procedures for 5100 shelf components, refer to the "Fiber management"chapter in *Installing Optical Metro 5100 Shelves and Components*, 323-1701-210.
- you refer to Table 3-42 to determine the connections you must make according to your site type.

—continued—

Procedure 3-10 (continued)
Connecting Discrete VOAs

Table 3-42
VOA connections for all site types

west to east connections		
From	**To**	
Discrete VOA	**OFA or OFA Filler card**	**DSCM**
VOA A/B OUT	IN (see Note 1 and Note 2)	IN
east to west connections		
From	**To**	
Discrete VOA	**OFA or OFA Filler card**	**DSCM**
VOA A/B OUT	IN (see Note1 and Note 2)	IN
Note 1: Run the patch cord to the OFA slot position but do not connect it to the OFA IN port. You will connect the patch cord to the OFA IN port during the equalization procedures. ***Note 2:*** The OFA VGA has an integrated eVOA (electrically controlled variable optical attenuator). For this reason, a VOA is not required when an OFA VGA is used. An equalizer (PBE, APBE) may still be required.		

Table 3-43 lists the tools and materials you require to complete this procedure.

Table 3-43
Required tools and materials

Item	**Quantity**	**Supplied**
Antistatic wrist and heel straps	1	no
Fiber-optic cleaning kit	1	no
Fiber inspection scope	1	no
SC-SC Optical patch cords (see Note)	as required	no
Note: Refer to "Fiber-optic patch cords" on page 13-97 in *Network Planning and Link Engineering*, 323-1701-110.		

—continued—

Procedure 3-10 (continued)
Connecting Discrete VOAs

Precautions

DANGER
Invisible laser radiation
The Optical Metro 5100/5200 operates up to a Hazard Level of k x 3A (IEC 60825-2:2000) or 1M (IEC 60825-2:2004). Use only viewing instruments with proper optical attenuation.

CAUTION
Risk of affecting network reliability
Make sure that all connectors are cleaned before you make the connections (or re-connections) described in this procedure. For cleaning information, see the chapter "Cleaning connectors", in *Installing Optical Metro 5200 Shelves and Components*, 323-1701-201.

CAUTION
Possible risk of damage to equipment and fiber
Make sure that the bulkhead connectors are lowered and snapped into place before you close the drawers. Failure to do so can cause damage to the connector unit, the fibers attached to the connector unit, or both.

Observe the minimum bend radius of 1.18 inches (30 mm) for the patch cords. Always use the fiber management components in the drawer to route the fiber.

Allow for sufficient slack in the fibers that enter and exit the drawers. If sufficient slack is not left, the fibers can become stretched and damaged when the drawer is opened.

—continued—

Procedure 3-10 (continued)
Connecting Discrete VOAs

Action

Step	Action	
1	Refer to Table 3-42 to determine the connections you must make.	
2	Locate the VOA and the applicable OFA, or DSCM in the rack, and refer to the chapter "Accessing internal connectors" in part 1 of this document to access the connectors.	
3	Connect one end of a patch cord to make the optical connection from the VOA.	
4	Route the fiber.	
5	**If** you are connecting to	**Then** go to
	an OFA	step 8
	an OFA filler or DSCM	step 6
6	Run the other end of the patch cord to the OFA filler card or DSCM and connect it to the IN port.	
7	Go to step 9.	
8	Run the other end of the patch cord to the OFA slot position but do not connect it to the OFA IN port. This will be done during the equalization procedures.	
9	Close the VOA drawer.	

—end—

Procedure 3-11
Connecting OFA circuit packs

Follow this procedure to connect OFA circuit packs to other components. This procedure refers only to the connections for the signals that leave the OFAs. Refer to the figures in the chapter "Preparing to connect optical components" of this document for the types of components that the OFAs must connect to. Follow procedures for connecting adjacent upstream components for signals that enter the OFAs.

Requirements

Before you begin this procedure make sure

- all connectors are clean. For information on cleaning, see "Cleaning connectors" in *Installing Optical Metro 5200 Shelves and Components*, 323-1701-201.
- you have completed all installation procedures.
- if you are connecting to a series of OMXs, you know the east-most and west-most OMX. Refer to "Guidelines for determining the east-most and west-most OMXs in a series of interconnected OMXs" in the "Preparing to connect optical components" chapter in part 1 of this document.
- you know whether the configuration for the ECT is straddled or bookended. Refer to "Guidelines for implementing straddled and bookended configurations for ECTs and C&L splitter/couplers" in the "Preparing to connect optical components" chapter in part 1 of this document.
- if you are connecting an OFA circuit pack to an ECT, that you are familiar with the guidelines for labeling the fibers and cables in an OFA installation kit. Refer to "Guidelines for labeling the fibers and cables in an OFA installation kit" in the "Fiber management" chapter in *Installing Optical Metro 5200 Shelves and Components*, 323-1701-201.
- you are familiar with the methods to access connectors in the components you are connecting. Refer to "Accessing internal connectors" in part 1 of this document.
- you are familiar with fiber routing procedures. For fiber routing procedures for 5200 shelf components, refer to the "Fiber management" chapter in *Installing Optical Metro 5200 Shelves and Components*, 323-1701-201. For fiber routing procedures for 5100 shelf components, refer to the "Fiber management" chapter in *Installing Optical Metro 5100 Shelves and Components*, 323-1701-210.
- you refer to the following tables to determine the connections you must make according to your site type.

—continued—

Procedure 3-11 (continued)
Connecting OFA circuit packs

Table 3-44 is a summary of the tables in this procedure.

Table 3-44
Summary table

OFA fibering method for	Table
Pre-amplified sites	Table 3-45 on page 3-73
Post-amplified sites	Table 3-46 on page 3-74
Pre-amplified and post-amplified sites	Table 3-47 on page 3-75
Standalone amplifier sites	Table 3-48 on page 3-76

Table 3-45
OFA connections for pre-amplified sites

west to east connections				
From	**To**			
OFA	**ECT (west)**	**C&L s/c (west)**	**OMX (1st west-facing)**	**DSCM (west)**
OUT	C&L IN	C&L IN	OTS IN	IN
east to west connections				
From	**To**			
OFA	**ECT (east)**	**C&L s/c (east)**	**OMX (1st east-facing)**	**DSCM (east)**
OUT	C&L IN	C&L IN	OTS IN	IN

—continued—

Procedure 3-11 (continued)
Connecting OFA circuit packs

Table 3-46
OFA connections for post-amplified sites

west to east connections					
From	**To**				
OFA	**ECT (west)**	**C&L s/c (east)**	**C&L s/c (west)**	**OSC tray (east)**	**DSCM (west)**
OUT	C&L IN **	C&L IN *	C&L IN **	THRU IN	IN
east to west connections					
From	**To**				
OFA	**ECT (east)**	**C&L s/c (west)**	**C&L s/c (east)**	**OSC tray (west)**	**DSCM (east)**
OUT	C&L IN **	C&L IN *	C&L IN **	THRU IN	IN
*for bookended configurations **for straddled or distributed equalization configurations					

—continued—

Procedure 3-11 (continued)
Connecting OFA circuit packs

Table 3-47
OFA connections for pre-amplified and post-amplified sites

west to east connections					
From	**To**				
OFA (west-most)	**OMX (1st west-facing)**	**C&L s/c (east)**	**OSC tray (east)**	**ECT (east)**	**DSCM (west)**
OUT	OTS IN	—	—	—	IN
OFA (east-most)					
OUT	—	C&L IN	THRU IN	C&L IN	—
east to west connections					
From	**To**				
OFA (east-most)	**OMX (1st east-facing)**	**C&L s/c (west)**	**OSC tray (west)**	**ECT (west)**	**DSCM (east)**
OUT	OTS IN	—	—	—	IN
OFA (west-most)					
OUT	—	C&L IN	THRU IN	C&L IN	—

—continued—

Procedure 3-11 (continued)
Connecting OFA circuit packs

Table 3-48
OFA connections for standalone amplifier sites

west to east connections						
From	**To**					
OFA	**ECT (east)**	**ECT (west)**	**C&L s/c (east)**	**C&L s/c (west)**	**OSC tray (east)**	**DSCM (west)**
OUT	C&L IN *	C&L IN **	C&L IN *	C&L IN **	THRU IN	IN
east to west connections						
From	**To**					
OFA	**ECT (west)**	**ECT (east)**	**C&L s/c (west)**	**C&L s/c (east)**	**OSC tray (west)**	**DSCM (east)**
OUT	C&L IN *	C&L IN **	C&L IN *	C&L IN **	THRU IN	IN
*for bookended configurations **for straddled configurations						

Table 3-49 lists the tools and materials you require to complete this procedure.

Table 3-49
Required tools and materials

Item	Quantity	Supplied
Antistatic wrist and heel straps	1	no
Fiber-optic cleaning kit	1	no
Fiber inspection scope	1	no
SC-SC Optical patch cords (see Note)	as required	no
Note: Refer to "Fiber-optic patch cords" on page 13-97 in *Network Planning and Link Engineering*, 323-1701-110.		

—continued—

Procedure 3-11 (continued)
Connecting OFA circuit packs

Precautions

DANGER
Invisible laser radiation
The Optical Metro 5100/5200 operates up to a Hazard Level of k x 3A (IEC 60825-2:2000) or 1M (IEC 60825-2:2004). Use only viewing instruments with proper optical attenuation.

CAUTION
Risk of affecting network reliability
Make sure that all connectors are cleaned before you make the connections (or re-connections) described in this procedure. For cleaning information, see the chapter "Cleaning connectors", in *Installing Optical Metro 5200 Shelves and Components*, 323-1701-201.

CAUTION
Possible risk of damage to equipment and fiber
Make sure that the bulkhead connectors are lowered and snapped into place before you close the drawers. Failure to do so can cause damage to the connector unit, the fibers attached to the connector unit, or both.

Observe the minimum bend radius of 1.18 inches (30 mm) for the patch cords. Always use the fiber management components in the drawer to route the fiber.

Allow for sufficient slack in the fibers that enter and exit the drawers. If sufficient slack is not left, the fibers can become stretched and damaged when the drawer is opened.

—continued—

Procedure 3-11 (continued)
Connecting OFA circuit packs

Action

Step	Action
1	Refer to the tables at the beginning of this procedure to determine the connections you must make.
2	Locate the OFA and the other applicable component in the rack, and refer to the chapter "Accessing internal connectors" in part 1 of this document.
3	**If** / **Then** go to the OFA IN signal is equalized using an APBE — step 4 otherwise — step 6
4	Connect one end of a patch cord to make the optical connection from the OFA.
5	Go to step 7.
6	Run one end of the patch cord to the OFA slot position but do not connect it to the OFA OUT port. You will connect the patch cord to the OFA OUT port during the equalization procedures.
7	Route the fiber.
8	Connect the other end of the patch cord to complete the optical connection to the other component.
9	Close the component drawers.

—end—

Procedure 3-12
Connecting OFA filler cards

Follow this procedure to connect OFA filler cards to other components. This procedure refers only to the connections for the signals that leave the OFA filler cards. Follow procedures for connecting adjacent upstream components for signals that enter the OFA filler cards.

Requirements

Before you begin this procedure make sure

- all connectors are clean. For information on cleaning, see "Cleaning connectors" in *Installing Optical Metro 5200 Shelves and Components*, 323-1701-201.
- you have completed all installation procedures.
- if you are connecting to a series of OMXs, you know the east-most and west-most OMX. Refer to "Guidelines for determining the east-most and west-most OMXs in a series of interconnected OMXs" in the "Preparing to connect optical components" chapter in part 1 of this document.
- you know whether the configuration for the ECT is straddled or bookended. Refer to "Guidelines for implementing straddled and bookended configurations for ECTs and C&L splitter/couplers" in the "Preparing to connect optical components" chapter in part 1 of this document.
- if you are connecting an OFA filler card to an ECT, that you are familiar with the guidelines for labeling the fibers and cables in an OFA installation kit. Refer to "Guidelines for labeling the fibers and cables in an OFA installation kit" in the "Fiber management" chapter in *Installing Optical Metro 5200 Shelves and Components*, 323-1701-201.
- you are familiar with the methods to access connectors in the components you are connecting. Refer to "Accessing internal connectors" in part 1 of this document.
- you are familiar with fiber routing procedures. For fiber routing procedures for 5200 shelf components, refer to the "Fiber management" chapter in *Installing Optical Metro 5200 Shelves and Components*, 323-1701-201. For fiber routing procedures for 5100 shelf components, refer to the "Fiber management" chapter in *Installing Optical Metro 5100 Shelves and Components*, 323-1701-210.
- you refer to the following tables to determine the connections you must make according to your site type.

—continued—

Procedure 3-12 (continued)
Connecting OFA filler cards

Table 3-50 is a summary of the tables in this procedure.

Table 3-50
Summary table

OFA filler card fibering method for	Table
Pre-amplified sites	Table 3-51 on page 3-80
Post-amplified sites	Table 3-52 on page 3-81
Pre-amplified and post-amplified sites	Table 3-53 on page 3-82
Standalone amplifier sites	Table 3-54 on page 3-83

Table 3-51
OFA filler card connections for pre-amplified sites

west to east connections			
From	**To**		
OFA Filler card	**ECT (west)**	**C&L s/c (west)**	**OMX (1st west-facing)**
OUT	C&L IN	C&L IN	OTS IN
east to west connections			
From	**To**		
OFA Filler card	**ECT (east)**	**C&L s/c (east)**	**OMX (1st east-facing)**
OUT	C&L IN	C&L IN	OTS IN

—continued—

Procedure 3-12 (continued)
Connecting OFA filler cards

Table 3-52
OFA filler card connections for post-amplified sites

west to east connections			
From	**To**		
OFA Filler card	**ECT (west)**	**C&L s/c (east)**	**C&L s/c (west)**
OUT	C&L IN **	C&L IN *	C&L IN **
east to west connections			
From	**To**		
OFA Filler card	**ECT (east)**	**C&L s/c (west)**	**C&L s/c (east)**
OUT	C&L IN **	C&L IN *	C&L IN **
*for bookended configurations **for straddled or distributed equalization configurations			

—continued—

Procedure 3-12 (continued)
Connecting OFA filler cards

Table 3-53
OFA filler card connections for pre-amplified and post-amplified sites

west to east connections			
From	**To**		
OFA or OFA Filler card (west-most)	**OMX (1st west-facing)**	**C&L s/c (east)**	**ECT (east)**
OUT	OTS IN	—	—
OFA or OFA Filler card (east-most)			
OUT	—	C&L IN	C&L IN
east to west connections			
From	**To**		
OFA or OFA Filler card (east-most)	**OMX (1st east-facing)**	**C&L s/c (west)**	**ECT (west)**
OUT	OTS IN	—	—
OFA or OFA Filler card (west-most)			
OUT	—	C&L IN	C&L IN

—continued—

Procedure 3-12 (continued)
Connecting OFA filler cards

Table 3-54
OFA filler card connections for standalone amplifier sites

west to east connections				
From	**To**			
OFA or OFA Filler card	**ECT (east)**	**ECT (west)**	**C&L s/c (east)**	**C&L s/c (west)**
OUT	C&L IN *	C&L IN **	C&L IN *	C&L IN **
east to west connections				
From	**To**			
OFA or OFA Filler card	**ECT (west)**	**ECT (east)**	**C&L s/c (west)**	**C&L s/c (east)**
OUT	C&L IN *	C&L IN **	C&L IN *	C&L IN **
*for bookended configurations **for straddled configurations				

Table 3-55 lists the tools and materials you require to complete this procedure.

Table 3-55
Required tools and materials

Item	Quantity	Supplied
Antistatic wrist and heel straps	1	no
Fiber-optic cleaning kit	1	no
Fiber inspection scope	1	no
Phillips #1 screwdriver required only if connecting to DWDM OMX (Standard)	1	no
Phillips #2 screwdriver required only if OMX type is OMX 16CH DWDM	1	no
SC-SC Optical patch cords (see Note)	as required	no
Note: Refer to "Fiber-optic patch cords" on page 13-97 in *Network Planning and Link Engineering*, 323-1701-110.		

—continued—

Procedure 3-12 (continued)
Connecting OFA filler cards

Precautions

DANGER
Invisible laser radiation
The Optical Metro 5100/5200 operates up to a Hazard Level of k x 3A (IEC 60825-2:2000) or 1M (IEC 60825-2:2004). Use only viewing instruments with proper optical attenuation.

CAUTION
Risk of affecting network reliability
Make sure that all connectors are cleaned before you make the connections (or re-connections) described in this procedure. For cleaning information, see the chapter "Cleaning connectors", in *Installing Optical Metro 5200 Shelves and Components*, 323-1701-201.

CAUTION
Possible risk of damage to equipment and fiber
Make sure that the bulkhead connectors are lowered and snapped into place before you close the drawers. Failure to do so can cause damage to the connector unit, the fibers attached to the connector unit, or both.

Observe the minimum bend radius of 1.18 inches (30 mm) for the patch cords. Always use the fiber management components in the drawer to route the fiber.

Allow for sufficient slack in the fibers that enter and exit the drawers. If sufficient slack is not left, the fibers can become stretched and damaged when the drawer is opened.

—continued—

Procedure 3-12 (continued)
Connecting OFA filler cards

Action

Step	Action
1	Refer to the tables at the beginning of this procedure to determine the connections you must make.
2	Locate the OFA filler card and the other applicable component in the rack, and refer to the chapter "Accessing internal connectors" in part 1 of this document.
3	Connect one end of a patch cord to make the optical connection from the OFA filler card.
4	Route the fiber.
5	Connect the other end of the patch cord to complete the optical connection to the other component.
6	Close the component drawers.

—end—

Procedure 3-13
Connecting an in-line OFA shelf using a fractional T1 line

Follow this procedure when you want to connect to an in-line OFA shelf using a fractional T1 line.

OFA shelves do not need to be colocated with terminal, Mixed or OADM shelves. You can install OFA shelves in intermediate sites to overcome system losses between Optical Metro 5200 sites. OFA shelves installed in intermediate sites are called in-line amplifiers.

Requirements

To provide communications with the Optical Metro network, you need a BayStack ARN Router (PEC CV1001004) and a fractional T1 line. The router provides a transparent bridge that relays information between the OFA shelf and the Optical Metro 5200 network.

Table 3-56 lists the tools and materials you need to connect the OFA shelf.

Table 3-56
Required tools and materials

Item	Quantity	Supplied
Antistatic wrist strap	1	no
RJ-48C or RJ-45 connectors to connect to the fractional T1 equipment	2	no
RJ-45 connectors to connect the router to the OFA shelf	2	no

—continued—

Procedure 3-13 (continued)
Connecting an in-line OFA shelf using a fractional T1 line

Precautions

DANGER
Invisible laser radiation
Do not stare into beam or view directly with optical instruments. Class 3A laser product.

CAUTION
Risk of affecting network reliability
Make sure that all connectors are cleaned before you make the connections (or re-connections) described in this procedure. For cleaning information, see the chapter "Cleaning connectors", in *Installing Optical Metro 5200 Shelves and Components*, 323-1701-201.

Action

Step	Action
1	Complete the following procedures to connect a management device to the router and commission the router. The procedures are contained in the *BayStack ARN Router Installing and Operating Guide*. • Connecting a Management Console • Connecting the Power Cable • Installing the Flash Memory Card • Starting the ARN
2	Log in to the router's Command Line Software (the login is case-sensitive). Type: `Manager ↵` *The command prompt appears.*
3	Verify the location of the boot image file and the boot configuration file by typing: `getcfg ↵` *By default, the location of the boot image file should be local, and the location of the boot configuration file should be network.*
4	If the boot configuration file is set to network, change the location to local by typing: `bconfig config local ↵`

—continued—

Procedure 3-13 (continued)
Connecting an in-line OFA shelf using a fractional T1 line

Step	Action
5	Reboot the router. Type: `boot ↵`
6	Start the Bay command console by typing: `bcc ↵` *The new command prompt appears.*
7	Place the router in configuration mode by typing: `config ↵`
8	Create an Ethernet object and assign a label to it by typing: `ethernet 1/1#circuit-name E1 ↵` ***Note:*** When you type 1/1, the first digit represents the slot number, and the second digit represents the connector number.
9	Enable bridging by typing: `ethernet/1/1#bridge ↵`
10	Return to the router-level command prompt by typing: `ethernet/1/1#back ↵`
11	To view the current configuration, type: `show config -all`

12	Configure the fractional T1 object.
	a. If the CSU/DSU module is connected to connector 1, type:
	`ft1 1/1 ↵`
	b. If the CSU/DSU module is connected to connector 2, type:
	`ft1 1/2 ↵`

13	Create a logical connection between two 64 kb/s timeslots. Type: `ft1/1#logical-line circuit-name FT2 ↵`
14	Configure the timeslots for the 64 kb/s connection by typing: `logical-line/FT2# time-slots {number} ↵` where number is the timeslot assigned by the T1 service provider; the number is between 1 and 24.
15	Configure the connection to use the standard WAN protocol by typing: `logical-line/FT2#standard ↵`
16	Enable bridging on the WAN interface by typing: `standard/FT2#bridge ↵`

—continued—

Procedure 3-13 (continued)
Connecting an in-line OFA shelf using a fractional T1 line

Step	Action

17	Return to the router-level command prompt by typing:
	`bridge/serial/1/1#back ↵`
	`standard/FT2/#back ↵`
	`logical-line/FT2#back ↵`
	`ft1/1/1#back ↵`

18	To view the current configuration, type: `show config -all ↵`

19	Verify the parameters that you configured for the fractional T1 connection. Type:
	`ft1 1/1 ↵`
	`ft1 1/1#info ↵`
	The screen displays the parameters configured for the fractional T1 connection.

20	Return to the router-level by typing: `back ↵`
21	Enable bridging at the router-level by typing: `bridge ↵`
22	Return to the router-level by typing: `back ↵`
23	To view the final configuration, type: `show config -all ↵`
24	Save the configuration by typing: `save config config ↵`
25	To save the configuration to another file, type: `show config -all -file myConfig.cfg ↵`

—end—

Procedure 3-14
Connecting east and west OSC modules within a single OSC tray at a monitoring site

Follow this procedure to connect the east and west OSCs at a monitoring site.

A monitoring site refers to a site on a ring where only the OSC circuit packs, OSC trays, SP, and two OCM circuit packs are deployed in the shelf at that site. The site is solely used to monitor and control the ring.

Requirements

Before you begin this procedure make sure

- all connectors are clean. For information on cleaning, see "Cleaning connectors" in *Installing Optical Metro 5200 Shelves and Components*, 323-1701-201.
- you have completed all installation procedures.
- you are familiar with the methods to access connectors in the components you are connecting. Refer to "Accessing internal connectors" in part 1 of this document.
- you are familiar with fiber routing procedures. For fiber routing procedures for 5200 shelf components, refer to the "Fiber management" chapter in *Installing Optical Metro 5200 Shelves and Components*, 323-1701-201. For fiber routing procedures for 5100 shelf components, refer to the "Fiber management" chapter in *Installing Optical Metro 5100 Shelves and Components*, 323-1701-210.
- you refer to Table 3-57 to determine the connections you must make according to your site type.

Table 3-57
East and west OSC tray connections

From	To
OSC tray (east)	**OSC tray (west)**
THRU IN	THRU OUT
THRU OUT	THRU IN

—continued—

Procedure 3-14 (continued)
Connecting east and west OSC modules within a single OSC tray at a monitoring site

Table 3-58 lists the tools and materials you require to complete this procedure.

Table 3-58
Required tools and materials

Item	Quantity	Supplied
Antistatic wrist and heel straps	1	no
Fiber-optic cleaning kit	1	no
Fiber inspection scope	1	no
SC-SC Optical patch cords (see Note)	as required	no
Note: Refer to "Fiber-optic patch cords" on page 13-97 in *Network Planning and Link Engineering*, 323-1701-110.		

Precautions

DANGER
Invisible laser radiation
The Optical Metro 5100/5200 operates up to a Hazard Level of k x 3A (IEC 60825-2:2000) or 1M (IEC 60825-2:2004). Use only viewing instruments with proper optical attenuation.

CAUTION
Risk of affecting network reliability
Make sure that all connectors are cleaned before you make the connections (or re-connections) described in this procedure. For cleaning information, see the chapter "Cleaning connectors", in *Installing Optical Metro 5200 Shelves and Components*, 323-1701-201.

—continued—

Procedure 3-14 (continued)
Connecting east and west OSC modules within a single OSC tray at a monitoring site

CAUTION
Possible risk of damage to equipment and fiber
Make sure that the bulkhead connectors are lowered and snapped into place before you close the drawers. Failure to do so can cause damage to the connector unit, the fibers attached to the connector unit, or both.

Observe the minimum bend radius of 1.18 inches (30 mm) for the patch cords. Always use the fiber management components in the drawer to route the fiber.

Allow for sufficient slack in the fibers that enter and exit the drawers. If sufficient slack is not left, the fibers can become stretched and damaged when the drawer is opened.

Action

Step	Action
1	Refer to Table 3-57 to determine the connections you must make.
2	Locate the OSC drawer in the rack and refer to the chapter "Accessing internal connectors" in part 1 of this document.
3	Locate the east and west OSC trays in the drawer.
4	Make the connections.
5	Close the drawer.

—end—

Procedure 3-15
Connecting OSC trays to other optical components

Follow this procedure to connect OSC trays to other components. This procedure refers only to the connections for the signals that leave the OSC trays. Refer to the figures in the chapter "Preparing to connect optical components" of this document for the types of components that the OSC trays must connect to. Follow the procedures for connecting adjacent upstream components for signals that enter the OSC trays.

If you must make internal connections between the east and west OSCs in a single OSC tray, refer to the procedure "Connecting east and west OSC modules within a single OSC tray at a monitoring site" on page 3-90.

Requirements

Before you begin this procedure make sure

- all connectors are clean. For information on cleaning, see "Cleaning connectors" in *Installing Optical Metro 5200 Shelves and Components*, 323-1701-201.
- you have completed all installation procedures.
- if you are connecting to a series of OMXs, you know the east-most and west-most OMX. Refer to "Guidelines for determining the east-most and west-most OMXs in a series of interconnected OMXs" in the "Preparing to connect optical components" chapter in part 1 of this document.
- you are familiar with the methods to access connectors in the components you are connecting. Refer to "Accessing internal connectors" in part 1 of this document.
- you are familiar with fiber routing procedures. For fiber routing procedures for 5200 shelf components, refer to the chapter in *Installing Optical Metro 5200 Shelves and Components*, 323-1701-201. For fiber routing procedures for 5100 shelf components, refer to the chapter in *Installing Optical Metro 5100 Shelves and Components*, 323-1701-210.
- you refer to Table 3-59 to determine the connections you must make according to your site type.

—continued—

Procedure 3-15 (continued)
Connecting OSC trays to other optical components

Table 3-59
OSC connections for all site types

west to east connections						
From	**To**					
OSC tray (west)	**OMX (1st west-facing)**	**C&L s/c (west)**	**ECT (west)**	**PBE**	**APBE**	**Discrete VOA**
THRU OUT	OTS IN	OTS IN	OTS IN	C&L BAND IN	IN	VOA A/B IN
east to west connections						
From	**To**					
OSC tray (east)	**OMX (1st east-facing)**	**C&L s/c (east)**	**ECT (east)**	**PBE**	**APBE**	**Discrete VOA**
THRU OUT	OTS IN	OTS IN	OTS IN	C&L BAND IN	IN	VOA A/B IN

Table 3-60 lists the tools and materials you require to complete this procedure.

Table 3-60
Required tools and materials

Item	Quantity	Supplied
Antistatic wrist and heel straps	1	no
Fiber-optic cleaning kit	1	no
Fiber inspection scope	1	no
Phillips #1 screwdriver required only if connecting to DWDM OMX (Standard)	1	no
Phillips #2 screwdriver required only if OMX type is OMX 16CH DWDM	1	no
SC-SC Optical patch cords (see Note) (except when connecting to an APBE circuit pack)	as required	no
SC-LC Optical patch cords (see Note) (when connecting to an APBE circuit pack)	as required	no
Note: Refer to "Fiber-optic patch cords" on page 13-97 in *Network Planning and Link Engineering*, 323-1701-110.		

—continued—

Procedure 3-15 (continued)
Connecting OSC trays to other optical components

Precautions

DANGER
Invisible laser radiation
The Optical Metro 5100/5200 operates up to a Hazard Level of k x 3A (IEC 60825-2:2000) or 1M (IEC 60825-2:2004). Use only viewing instruments with proper optical attenuation.

CAUTION
Risk of affecting network reliability
Make sure that all connectors are cleaned before you make the connections (or re-connections) described in this procedure. For cleaning information, see the chapter "Cleaning connectors", in *Installing Optical Metro 5200 Shelves and Components*, 323-1701-201.

CAUTION
Possible risk of damage to equipment and fiber
Make sure that the bulkhead connectors are lowered and snapped into place before you close the drawers. Failure to do so can cause damage to the connector unit, the fibers attached to the connector unit, or both.

Observe the minimum bend radius of 1.18 inches (30 mm) for the patch cords. Always use the fiber management components in the drawer to route the fiber.

Allow for sufficient slack in the fibers that enter and exit the drawers. If sufficient slack is not left, the fibers can become stretched and damaged when the drawer is opened.

—continued—

Procedure 3-15 (continued)
Connecting OSC trays to other optical components

Action

Step	Action
1	Refer to Table 3-59 to determine the connections you must make.
2	Locate the OSC tray and the other applicable component in the rack. Refer to the chapter "Accessing internal connectors" in part 1 of this document to access the connectors.
3	Connect one end of a patch cord to make the optical connection from the OSC tray.
4	Route the fiber.
5	Connect the other end of the patch cord to complete the optical connection to the other component.
6	Close the component drawers.

—end—

Procedure 3-16
Connecting OSC trays to an OSC circuit pack

Follow this procedure to connect the east and west OSC trays to an OSC circuit pack. Both the east and west OSC trays connect to one OSC circuit pack.

Requirements

Before you begin this procedure make sure

- all connectors are clean. For information on cleaning, see "Cleaning connectors" in *Installing Optical Metro 5200 Shelves and Components*, 323-1701-201.
- you have completed all installation procedures.
- your network planning group has provided you with information regarding attenuator requirements to prevent alarm and cross-talk problems, and OSC circuit pack Rx overload. For more information, see the "Link engineering rules" chapter in *Network Planning and Link Engineering*, 323-1701-110.
- you are familiar with the methods to access connectors in the components you are connecting. Refer to "Accessing internal connectors" in part 1 of this document.
- you are familiar with fiber routing procedures. For fiber routing procedures for 5200 shelf components, refer to the "Fiber management" chapter in *Installing Optical Metro 5200 Shelves and Components*, 323-1701-201. For fiber routing procedures for 5100 shelf components, refer to the "Fiber management" chapter in *Installing Optical Metro 5100 Shelves and Components*, 323-1701-210.
- you refer to Table 3-61 to determine the connections you must make.

—continued—

Procedure 3-16 (continued)
Connecting OSC trays to an OSC circuit pack

Table 3-61
OSC tray connections to OSC circuit pack

From	**To**
OSC tray (west)	**OSC circuit pack**
OSC ADD	OSC-W TX
OSC DROP	OSC-W RX
WSC Fm TX	WSC-W TX
WSC Fm RX	WSC-W RX
From	
OSC tray (east)	
OSC ADD	OSC-E TX
OSC DROP	OSC-E RX
WSC Fm TX	WSC-E TX
WSC Fm RX	WSC-E RX

Table 3-62 lists the tools and materials you require to complete this procedure.

Table 3-62
Required tools and materials

Item	**Quantity**	**Supplied**
Antistatic wrist and heel straps	1	no
Fiber-optic cleaning kit	1	no
Fiber inspection scope	1	no
SC-LC (single-mode) duplex optical patch cords	2	supplied with the OSC tray
SC-LC (multi-mode) duplex optical patch cords	2	supplied with the OSC tray
Attenuators	as determined by network planning group (attenuator value also provided by network planning group)	no

—continued—

Procedure 3-16 (continued)
Connecting OSC trays to an OSC circuit pack

Precautions

DANGER
Invisible laser radiation
The Optical Metro 5100/5200 operates up to a Hazard Level of k x 3A (IEC 60825-2:2000) or 1M (IEC 60825-2:2004). Use only viewing instruments with proper optical attenuation.

CAUTION
Risk of affecting network reliability
Make sure that all connectors are cleaned before you make the connections (or re-connections) described in this procedure. For cleaning information, see the chapter "Cleaning connectors", in *Installing Optical Metro 5200 Shelves and Components*, 323-1701-201.

CAUTION
Possible risk of damage to equipment and fiber
Make sure that the bulkhead connectors are lowered and snapped into place before you close the drawers. Failure to do so can cause damage to the connector unit, the fibers attached to the connector unit, or both.

Observe the minimum bend radius of 1.18 inches (30 mm) for the patch cords. Always use the fiber management components in the drawer to route the fiber.

Allow for sufficient slack in the fibers that enter and exit the drawers. If sufficient slack is not left, the fibers can become stretched and damaged when the drawer is opened.

—continued—

Procedure 3-16 (continued)
Connecting OSC trays to an OSC circuit pack

Action

Step	Action
1	Refer to Table 3-61 to determine the connections you must make.
2	Locate the OSC tray and the other applicable component in the rack. Refer to the chapter "Accessing internal connectors" in part 1 of this document to access the connectors.
3	Connect one end of a patch cord to make the optical connection from the OSC tray. ***Note 1:*** Use the single-mode patch cords for the OSC connections and the multi-mode patch cords for the WSC connections. ***Note 2:*** If an attenuator is required at the OSC ADD port, as determined by your network planning group, connect it to the OSC ADD port. Refer to Procedure 3-50, "Installing an attenuator at the add port in an OSC tray" on page 3-332.
4	Route the fiber.
5	Connect the other end of the patch cord to complete the optical connection to the OSC circuit pack.
6	Close the OSC drawer.

—end—

Figure 3-11
Connecting the OSC trays to the OSC circuit pack

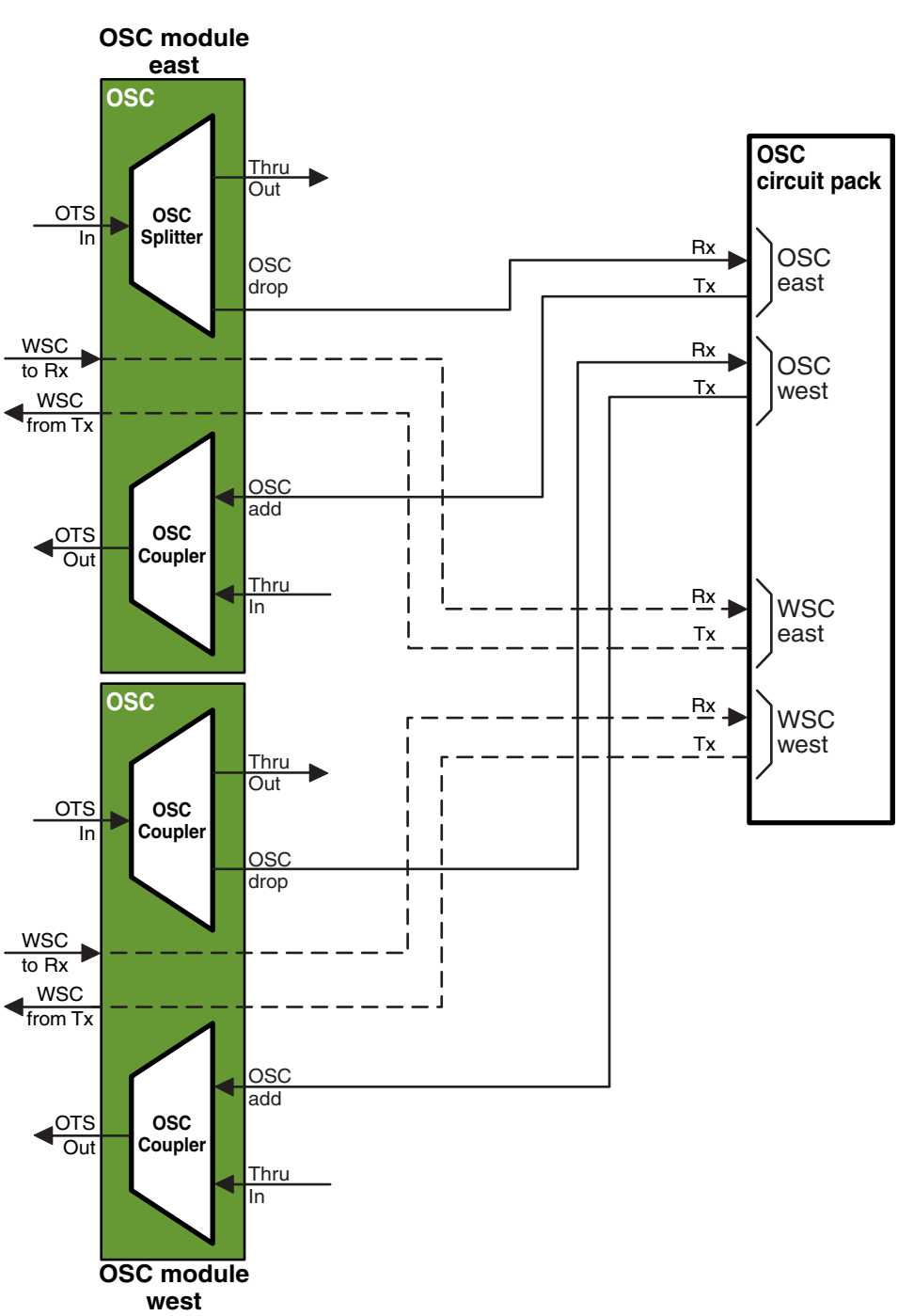

Procedure 3-17
Connecting OSC wayside channels (WSC ports) to subtending equipment through the OSC tray

Follow this procedure to connect OSC wayside channels (WSC ports) to subtending equipment through the OSC tray.

Requirements

Before you begin this procedure make sure

- all connectors are clean. For information on cleaning, see "Cleaning connectors" in *Installing Optical Metro 5200 Shelves and Components*, 323-1701-201.
- you have completed Procedure 3-16 "Connecting OSC trays to an OSC circuit pack".
- the speed of operation of the subtending equipment is within the maximum bit rate supported by the OSC WSC ports. See Table 2-54 " OSC circuit pack specifications" in *Technical Specifications*, 323-1701-180.
- your network planning group has provided you with information regarding attenuator requirements to allow the subtending equipment and the OSC WSC ports to interwork properly. See Table 2-54 " OSC circuit pack specifications" in *Technical Specifications*, 323-1701-180.
- you are familiar with fiber routing procedures. For fiber routing procedures for 5200 shelf components, refer to the "Fiber management" chapter in *Installing Optical Metro 5200 Shelves and Components*, 323-1701-201. For fiber routing procedures for 5100 shelf components, refer to the "Fiber management" chapter in *Installing Optical Metro 5100 Shelves and Components*, 323-1701-210.
- the WSC facilities are in the in-service state. See Procedure 3-10 "Putting a circuit pack or SFP facility in-service", in *Provisioning and Operating Procedures*, 323-1701-310.

—continued—

Procedure 3-17 (continued)
Connecting OSC wayside channels (WSC ports) to subtending equipment through the OSC tray

Table 3-63 lists the tools and materials you require for connecting the OSC WSC ports to subtending equipment through the OSC tray.

Table 3-63
Required tools and materials

Item	Quantity	Supplied
Antistatic strap	1	no
Optical fiber cleaning kit	1	no
Fiber inspection scope	1	no
62.5/125 µm MMF SC-SC Optical patch cord	2 per OSC WSC port	no
Optical power meter (OPM) with an SC Fiber-Optic Adapter	1	no
Optical power meter (OPM) with an LC Fiber-Optic Adapter	1	no
Optical power meter (OPM) with an a Fiber-Optic Adapter which matches the connector type used on the subtending equipment	1	no
Attenuators	as determined by network planning group (attenuator value also provided by network planning group)	no

—continued—

Procedure 3-17 (continued)
Connecting OSC wayside channels (WSC ports) to subtending equipment through the OSC tray

Precautions

DANGER
Invisible laser radiation
The Optical Metro 5100/5200 operates up to a Hazard Level of k x 3A (IEC 60825-2:2000) or 1M (IEC 60825-2:2004). Use only viewing instruments with proper optical attenuation.

CAUTION
Risk of affecting network reliability
Make sure that all connectors are cleaned before you make the connections (or re-connections) described in this procedure. For cleaning information, see the chapter "Cleaning connectors", in *Installing Optical Metro 5200 Shelves and Components*, 323-1701-201.

CAUTION
Possible risk of damage to equipment and fiber
Make sure that the bulkhead connectors are lowered and snapped into place before closing the drawer. Failure to do so could cause damage to the connector unit, the fibers attached to the connector unit, or both.

Observe the minimum bend radius of 1.18-inches (30-mm) for the patch cords. Always use the fiber management components in the drawer to route the fiber.

Allow for sufficient slack in the fibers that enter and exit the drawer. If sufficient slack is not left, the fibers can become stretched and damaged when the drawer is opened.

—continued—

Procedure 3-17 (continued)
Connecting OSC wayside channels (WSC ports) to subtending equipment through the OSC tray

Action

Step	Action
1	Refer to the following table to determine the connections you will make.

From OSC tray (west)	**To subtending equipment**
WSC To RX	RX
WSC Fm TX	TX
From OSC tray (east)	
WSC To RX	RX
WSC Fm TX	TX

2 Using a patch cord which is known to be error free and an Optical Power Meter set to 850 nm, measure the Tx signal strength of the subtending equipment that you want to connect to the OSC tray (west) WSC Fm TX port.

Note: There are 2 ports labeled WSC Fm TX. A port nearest to the back of the OSC tray and the other nearest to the front of the OSC tray. In this step, it is the one nearest to the front of the OSC tray.

3 Make sure that the signal strength is within the Tx specifications of the subtending equipment.

Note: If the signal strength is not within the Tx specifications, try cleaning the optical connectors or replacing the subtending equipment circuit pack. For information on cleaning, see "Cleaning connectors" in *Installing Optical Metro 5200 Shelves and Components*, 323-1701-201.

4 Connect the patch cord that will be used to interconnect the Tx signal of the subtending equipment to the OSC tray (west) WSC Fm TX port to the Tx port of the subtending equipment.

Note: There are 2 ports labeled WSC Fm TX. A port nearest to the back of the OSC tray and the other nearest to the front of the OSC tray. In this step, it is the one nearest to the front of the OSC tray.

5 Measure and record the strength of the Tx signal at the end of the patch cord that will connect to the OSC tray (west) WSC Fm TX port.

Note: There are 2 ports labeled WSC Fm TX. A port nearest to the back of the OSC tray and the other nearest to the front of the OSC tray. In this step, it is the one nearest to the front of the OSC tray.

—continued—

Procedure 3-17 (continued)
Connecting OSC wayside channels (WSC ports) to subtending equipment through the OSC tray

Step	Action
6	Connect the patch cord to the OSC tray (west) WSC Fm TX port. ***Note:*** There are 2 ports labeled WSC To Rx. A port nearest to the back of the OSC tray and the other nearest to the front of the OSC tray. In this step, it is the one nearest to the front of the OSC tray.
7	**If** the OSC tray (west) WSC Fm TX port — **Then** go to requires attenuation — step 8 does not require attenuation — step 13
8	Disconnect the patch cord which is connected to the OSC tray (west) WSC To RX port. ***Note:*** There are 2 ports labeled WSC To Rx. A port nearest to the back of the OSC tray and the other nearest to the front of the OSC tray. In this step, it is the one nearest to the back of the OSC tray.
9	Clean the attenuator and connect it to the OSC tray (west) WSC To RX port. ***Note:*** There are 2 ports labeled WSC To Rx. A port nearest to the back of the OSC tray and the other nearest to the front of the OSC tray. In this step, it is the one nearest to the back of the OSC tray.
10	Connect an SC-SC 62.5/125 um MMF patch cord which is known to be error-free to the attenuator and the other end to a Optical Power Meter set to 850 nm.
11	Measure the signal strength to verify that the attenuator is working correctly.
12	Disconnect the Optical Power Meter and reconnect the patch cord which was disconnected in step 8 to the attenuator.
13	At the OSC circuit pack, disconnect the patch cord connected to the WSC W RX port on the OSC circuit pack and connect it to the Optical Power Meter. ***Note:*** If making connections to the OSC tray (east) then disconnect the patch cord connected to the WSC E RX port.
14	Make sure that the signal strength is within the Rx specifications for the WSC port. See Table 2-54 “ OSC circuit pack specifications” in *Technical Specifications*, 323-1701-180. ***Note:*** If the signal strength is not within the Rx specifications, try cleaning the optical connectors or replacing patch cords. If this doesn’t help, call your next level of support. For information on cleaning, see “Cleaning connectors” in *Installing Optical Metro 5200 Shelves and Components*, 323-1701-201.
15	Reconnect the patch cord which was disconnected in step 13.

—continued—

Procedure 3-17 (continued)
Connecting OSC wayside channels (WSC ports) to subtending equipment through the OSC tray

Step	Action
16	Using a patch cord which is known to be error free, measure the Tx signal strength of the OSC tray (west) WSC To RX port that you want to connect to the Rx port of the subtending equipment. ***Note:*** There are 2 ports labeled WSC To Rx. A port nearest to the back of the OSC tray and the other nearest to the front of the OSC tray. In this step, it is the one nearest to the front of the OSC tray.
17	Connect an SC-SC 62.5/125 um MMF patch cord which is known to be error-free to the OSC tray (west) WSC To RX port and the other end to a Optical Power Meter set to 850 nm. ***Note:*** There are 2 ports labeled WSC To Rx. A port nearest to the back of the OSC tray and the other nearest to the front of the OSC tray. In this step, it is the one nearest to the front of the OSC tray.
18	Make sure that the signal strength is within the Tx specifications for the WSC port. See Table 2-54 “ OSC circuit pack specifications” in *Technical Specifications*, 323-1701-180. ***Note:*** If the signal strength is not within the Tx specifications, try cleaning the optical connectors or replacing the OSC circuit pack. For information on cleaning, see “Cleaning connectors” in *Installing Optical Metro 5200 Shelves and Components*, 323-1701-201.
19	Connect the patch cord that will be used to interconnect the OSC tray (west) WSC To RX port to the Rx port of the subtending equipment to the OSC tray (west) WSC To RX port. ***Note:*** There are 2 ports labeled WSC To Rx. A port nearest to the back of the OSC tray and the other nearest to the front of the OSC tray. In this step, it is the one nearest to the front of the OSC tray.
20	Measure and record the strength of the Tx signal at the end of the patch cord that will connect to the Rx port of the subtending equipment.
21	**If** the Rx port on the subtending equipment / **Then** go to requires attenuation — step 22 does not require attenuation — step 26
22	Disconnect the patch cord which is connected to the OSC tray (west) WSC Fm TX port. ***Note:*** There are 2 ports labeled WSC Fm Tx. A port nearest to the back of the OSC tray and the other nearest to the front of the OSC tray. In this step, it is the one nearest to the back of the OSC tray.

—continued—

Procedure 3-17 (continued)
Connecting OSC wayside channels (WSC ports) to subtending equipment through the OSC tray

Step	Action
23	Clean the attenuator and connect it the OSC tray (west) WSC Fm TX port. ***Note:*** There are 2 ports labeled WSC Fm Tx. A port nearest to the back of the OSC tray and the other nearest to the front of the OSC tray. In this step, it is the one nearest to the back of the OSC tray.
24	Reconnect the patch cord which was disconnected in step 22.
25	Measure and record the strength of the Tx signal at the end of the patch cord that will connect to the Rx port of the subtending equipment to verify that the attenuator is working correctly.
26	Make sure that the signal strength is within the Rx specifications of the subtending equipment. ***Note:*** If the signal strength is not within the Rx specifications, try cleaning the optical connectors or replacing patch cords. If this doesn't help, call your next level of support.For information on cleaning, see "Cleaning connectors" in *Installing Optical Metro 5200 Shelves and Components*, 323-1701-201.
27	Connect the patch cord to the Rx port of the subtending equipment
28	Repeat step 2 to step 27 for the OSC tray (east) connections.

—end—

Procedure 3-18
Connecting trunk switches to optical components

Follow this procedure to connect the Optical Trunk Switch (OTS) or Enhanced Trunk Switch (ETS) to other optical components. After completing this procedure, you should perform Procedure 3-37 "Interconnecting Optical Trunk Switches through the backbone" on page 3-273 or Procedure 3-38 "Interconnecting Enhanced Trunk Switches through the backbone" on page 3-279 depending on the type of trunk switch you have deployed to establish optical continuity.

A trunk switch is a standalone component that provides optical path protection for Optical Metro point-to-point networks. Each terminal site in a point-to-point network contains one trunk switch.

For details about provisioning and operating trunk switches, see the chapter "Optical Trunk Switch OAM&P" or "Enhanced Trunk Switch OAM&P" in *Provisioning and Operating Procedures*, 323-1701-310.

Requirements

Before you begin this procedure make sure

- all connectors are clean. For information on cleaning, see "Cleaning connectors" in *Installing Optical Metro 5200 Shelves and Components*, 323-1701-201.
- you have completed all installation procedures pertaining to Optical Trunk Switch or Enhanced Trunk Switch.
- if you are connecting to a series of OMXs, you know the east-most and west-most OMX. Refer to "Guidelines for determining the east-most and west-most OMXs in a series of interconnected OMXs" in the "Preparing to connect optical components" chapter in part 1 of this document.
- you are familiar with fiber routing procedures. For fiber routing procedures for 5200 shelf components, refer to the "Fiber management" chapter in *Installing Optical Metro 5200 Shelves and Components*, 323-1701-201. For fiber routing procedures for 5100 shelf components, refer to the "Fiber management" chapter in *Installing Optical Metro 5100 Shelves and Components*, 323-1701-210.
- you refer to Table 3-64 to determine the connections you must make.

—continued—

Procedure 3-18 (continued)
Connecting trunk switches to optical components

Table 3-64
Connections required to connect Optical Trunk Switch to next optical component

From	To next optical component at the site			
Optical Trunk Switch	**OMX**	**C&L s/c**	**1310 nm s/c**	**OSC tray**
OTS OUT	OTS IN	OTS IN	OTS IN	OTS IN
OTS IN	OTS OUT	OTS OUT	OTS OUT	OTS OUT

Table 3-65
Connections required to connect Enhanced Trunk Switch to next optical component

From	To next optical component at the site			
Enhanced Trunk Switch	**OMX**	**C&L s/c** (see Note)	**1310 nm s/c**	**OSC tray**
B (equivalent to OTS OUT)	OTS IN	OTS IN	OTS IN	OTS IN
A (equivalent to OTS IN)	OTS OUT	OTS OUT	OTS OUT	OTS OUT
Note: If the Enhanced Trunk Switch (ETS) link requires pre-amplification, then ETS ports C, D, E and F need to connect to C&L s/c or HIP. The connections required to connect ETS to the next optical components in a pre-amplified ETS link are documented in Procedure 3-38, "Interconnecting Enhanced Trunk Switches through the backbone" on page 3-279.				

Table 3-66 lists the tools and materials you require to complete the procedure.

Table 3-66
Required tools and materials

Item	Quantity	Supplied
Antistatic wrist and heel straps	1	no
Fiber-optic cleaning kit	1	no
Fiber inspection scope	1	no
Phillips #1 screwdriver required only if OMX type is DWDM (Standard)	1	no
Phillips #2 screwdriver required only if OMX type is OMX 16CH DWDM	1	no
SC-SC optical patch cords	2	no

—continued—

Procedure 3-18 (continued)
Connecting trunk switches to optical components

Precautions

DANGER
Invisible laser radiation
The Optical Metro 5100/5200 operates up to a Hazard Level of k x 3A (IEC 60825-2:2000) or 1M (IEC 60825-2:2004). Use only viewing instruments with proper optical attenuation.

CAUTION
Risk of affecting network reliability
Make sure that all connectors are cleaned before you make the connections (or re-connections) described in this procedure. For cleaning information, see the chapter "Cleaning connectors", in *Installing Optical Metro 5200 Shelves and Components*, 323-1701-201.

CAUTION
Possible risk of damage to equipment and fiber
Make sure that the bulkhead connectors are lowered and snapped into place before you close the drawers. In the case of an OMX 16CH DWDM, make sure that the sliders are pushed fully to the rear before closing the front cover. Failure to do so could cause damage to the connector unit, the fibers attached to the connector unit, or both.

Observe the minimum bend radius of 1.18 inches (30 mm) for the patch cords. Always use the fiber management components in the drawer to route the fiber.

Allow for sufficient slack in the fibers that enter and exit the drawers. If sufficient slack is not left, the fibers can become stretched and damaged when the drawer is opened.

—continued—

Procedure 3-18 (continued)
Connecting trunk switches to optical components

Action

Step	Action
1	Depending on the type of trunk switch you have deployed, refer to Table 3-64 or Table 3-65 to determine the connections you must make.
2	Locate the trunk switch and the other applicable components at the site.
3	Connect one end of a patch cord to make the optical connection from the trunk switch.
4	Route the fiber.
5	Connect the other end of the patch cord to complete the optical connection to the other component.
6	Close the component drawers or covers.
7	Depending on the type of trunk switch you have deployed, follow Procedure 3-37, “Interconnecting Optical Trunk Switches through the backbone” on page 3-273 or Procedure 3-38, “Interconnecting Enhanced Trunk Switches through the backbone” on page 3-279 to complete the installation.

—end—

Procedure 3-19
Connecting an OMX to OCLD circuit packs

Follow this procedure to connect an OMX to OCLD circuit packs. All OMX types can connect to OCLD circuit packs.

DWDM OMXs (Standard, OMX 4CH + Fiber Manager, OMX 4CH Enhanced) can connect to all OCLD circuit pack types.

DWDM OMX (OMX 16CH DWDM) can only connect to OCLD 2.5 Gbit/s Flex or OCLD 2.5 Gbit/s Universal circuit packs.

CWDM OMXs (both the 4CH and 1CH versions) can connect to all OCLD circuit pack types except OCLD 2.5 Gbit/s Universal circuit packs.

ITU CWDM OMXs (1CH, 4CH and 8CH versions) can only connect to OCLD 2.5 Gbit/s Flex circuit packs.

ATTENTION

Before you begin, ensure that you have determined which OMX pig tails or connectors are to be connected to which OCLD circuit packs. For details about planning the connections between OMX modules and OCLD circuit packs, see "Guidelines for connecting OMX modules to line-side circuit packs" on page 12-9 in *Network Planning and Link Engineering*, 323-1701-110.

—continued—

Procedure 3-19 (continued)
Connecting an OMX to OCLD circuit packs

Requirements

Before you begin this procedure, make sure that all connectors are clean and that you are familiar with how to access connectors in an OMX. Refer to the following procedures in part one of this document:

— if you are connecting DWDM (Standard) OMX to an OCLD then refer to Procedure 1-1, "Accessing connectors in an OMX (Standard) tray".

— if you are connecting DWDM OMX 4CH + Fiber Manager or OMX 4CH Enhanced to an OCLD then refer to Procedure 1-2, "Accessing connectors in an OMX 4CH + Fiber Manager or OMX 4 CH Enhanced".

— if you are connecting OMX 1CH CWDM to an OCLD then refer to Procedure 1-3, "Accessing connectors in an OMX 1CH CWDM".

— if you are connecting OMX 4CH CWDM to an OCLD then refer to Procedure 1-4, "Accessing connectors in an OMX 4CH CWDM".

— if you are connecting OMX 1CH OADM ITU CWDM to an OCLD then refer to Procedure 1-5, "Accessing connectors in an OMX 1CH OADM ITU CWDM".

— if you are connecting OMX 4CH ITU CWDM or OMX 4CH OADM ITU CWDM to an OCLD then refer to Procedure 1-6 "Accessing connectors in an OMX 4CH ITU CWDM or OMX 4CH OADM ITU CWDM".

— if you are connecting OMX 8CH ITU CWDM to an OCLD then refer to Procedure 1-7 "Accessing connectors in an OMX 8CH ITU CWDM".

— if you are connecting OMX 16CH DWDM to an OCLD then refer to Procedure 1-8 "Accessing connectors in an OMX 16CH DWDM".

For information on cleaning, see "Cleaning connectors" in *Installing Optical Metro 5200 Shelves and Components*, 323-1701-201.

—continued—

Procedure 3-19 (continued)
Connecting an OMX to OCLD circuit packs

Table 3-67 lists the tools and materials you require to complete this procedure.

Table 3-67
Required tools and materials

Item	Quantity	Supplied
Antistatic wrist and heel straps	1	no
Fiber-optic cleaning kit	1	no
Fiber inspection scope	1	no
Phillips #1 screwdriver required only if OMX type is DWDM (Standard)	1	no
Phillips #2 screwdriver required only if OMX type is OMX 16CH DWDM	1	no
Optical patch cords (see Note)	see text following this table	order from Nortel Networks
Note: Refer to "Fiber-optic patch cords" on page 13-97 in *Network Planning and Link Engineering*, 323-1701-110.		

—continued—

Procedure 3-19 (continued)
Connecting an OMX to OCLD circuit packs

For the OMX (Standard) DWDM:

- the pigtails of OMX (Standard) trays connect to OCLD circuit packs. Pigtails from the west OMX connect directly to OCLDs (OCLD 1.25 Gbit/s and OCLD 2.5 Gbit/s) in slots 1 to 4. Pigtails from the east OMX connect directly to the OCLDs (OCLD 1.25 Gbit/s and OCLD 2.5 Gbit/s) in slots 15 to 18. See Figure 3-12 on page 3-124.
- if the OCLDs are not in slots 1 to 4 and 15 to 18 or if you are connecting to OCLD 2.5 Gbit/s Flex or OCLD 2.5 Gbit/s Universal, you must extend the length of the OMX pigtail using a patch cord with an adaptor that connects to the OMX pigtail, and a connector that connects to the OCLD.
  - Use a FC-FC patch cord and a FC-FC adaptor (for the pigtail) to connect the OMX to OCLDs (OCLD 1.25 Gbit/s and OCLD 2.5 Gbit/s) in slots 5 to 8 and 11 to 14. See Figure 3-13 on page 3-125.
  - Use a FC-LC patch cord and a FC-FC adaptor (for the pigtail) to connect the OMX to an OCLD 2.5 Gbit/s Flex or OCLD 2.5 Gbit/s Universal. See Figure 3-14 on page 3-126.

  Note: You can use the Fiber Manager to route the extra slack of the patch cords. Refer to procedure Procedure 8-3 "Guidelines for routing fiber in the Fiber Manager" in *Installing Optical Metro 5200 Shelves and Components*, 323-0701-201.

For the OMX 4CH + Fiber Manager DWDM, OMX 4CH Enhanced DWDM:

- use SC-FC duplex patch cords to connect these OMX types to all the OCLD circuit packs (except for the OCLD 2.5 Gbit/s Flex or OCLD 2.5 Gbit/s Universal)
- use SC-LC duplex patch cords to connect these OMX types to an OCLD 2.5 Gbit/s Flex or OCLD 2.5 Gbit/s Universal

For the OMX 1CH CWDM or the OMX 4CH CWDM:

- use SC-FC duplex patch cords to connect these OMX types to all the OCLD circuit packs (except for the OCLD 2.5 Gbit/s Flex)
- use SC-LC duplex patch cords to connect these OMX types to an OCLD 2.5 Gbit/s Flex

For the OMX 16CH DWDM use LC-LC duplex patch cords to connect OMX 16CH DWDM to an OCLD 2.5 Gbit/s Flex or OCLD 2.5 Gbit/s Universal.

For the OMX 1CH ITU CWDM, OMX 4CH ITU CWDM or the OMX 8CH ITU CWDM use SC-LC duplex patch cords to connect these OMX types to an OCLD 2.5 Gbit/s Flex.

—continued—

Procedure 3-19 (continued)
Connecting an OMX to OCLD circuit packs

Note: Before you begin this procedure, complete the fiber routing within the OMX drawers, and secure the patch cords to the vertical rack rail.

For fiber routing procedures for 5200 shelf components, refer to the "Fiber management"chapter in *Installing Optical Metro 5200 Shelves and Components*, 323-1701-201. For fiber routing procedures for 5100 shelf components, refer to the "Fiber management" chapter in *Installing Optical Metro 5100 Shelves and Components*, 323-1701-210.

Precautions

DANGER
Invisible laser radiation
The Optical Metro 5100/5200 operates up to a Hazard Level of k x 3A (IEC 60825-2:2000) or 1M (IEC 60825-2:2004). Use only viewing instruments with proper optical attenuation.

CAUTION
Risk of affecting network reliability
Make sure that all connectors are cleaned before you make the connections (or re-connections) described in this procedure. For cleaning information, see the chapter "Cleaning connectors", in *Installing Optical Metro 5200 Shelves and Components*, 323-1701-201.

CAUTION
Possible risk of damage to equipment and fiber
Make sure that the bulkhead connectors are lowered and snapped into place before you close the drawers. In the case of an OMX 16CH DWDM, make sure that the sliders are pushed fully to the rear before closing the front cover. Failure to do so could cause damage to the connector unit, the fibers attached to the connector unit, or both.

Observe the minimum bend radius of 1.18 inches (30 mm) for the patch cords. Always use the fiber management components in the drawer to route the fiber.

Allow for sufficient slack in the fibers that enter and exit the drawers. If sufficient slack is not left, the fibers can become stretched and damaged when the drawer is opened.

—continued—

Procedure 3-19 (continued)
Connecting an OMX to OCLD circuit packs

Action

Step	Action

1 When you make OMX connections to newly inserted OCLDs, ensure that the circuit pack is not fully inserted in the shelf.

2

If you are connecting	**Then** follow
DWDM (Standard) OMX to an OCLD	step 3 to step 15
DWDM OMX 4CH + Fiber Manager or OMX 4CH Enhanced to an OCLD	step 16 to step 21
OMX 16CH DWDM	step 22 to step 25
OMX 1CH CWDM to an OCLD	step 26 to step 31
OMX 4CH CWDM to an OCLD	step 32 to step 37
OMX 1CH OADM ITU CWDM to an OCLD	step 38 to step 43
OMX 4CH ITU CWDM or OMX 4CH OADM ITU CWDM to an OCLD	step 38 to step 43
OMX 8CH ITU CWDM to an OCLD	step 38 to step 43

Connecting DWDM (Standard) OMX to an OCLD circuit pack

3 Refer to the following table to determine the connections you must make.

DWDM (Standard) OMX port label	OCLD circuit pack port label
BAND # CH # ADD	TX
BAND # CH # DROP	RX

—continued—

Procedure 3-19 (continued)
Connecting an OMX to OCLD circuit packs

Step	Action
4	Identify the pigtails that originate at each side of the OMX tray as illustrated in the following example.

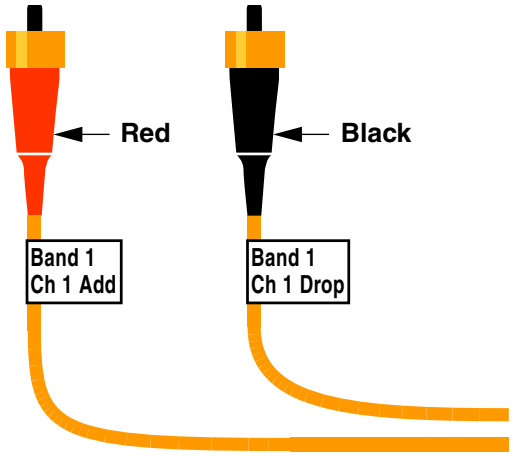

5

If you are connecting the	**Then** go to
West OMX module to OCLDs in slots 1 to 4 (for OCLD 1.25 Gbit/s or OCLD 2.5 Gbit/s)	step 6
West OMX module to OCLDs in any other slot (for OCLD 1.25 Gbit/s or OCLD 2.5 Gbit/s) or any slot for OCLD 2.5 Gbit/s Flex or OCLD 2.5 Gbit/s Universal	step 9
East OMX module to OCLDs in slots 15 to 18 (for OCLD 1.25 Gbit/s or OCLD 2.5 Gbit/s)	step 6
East OMX module to OCLDs in any other slot (for OCLD 1.25 Gbit/s or OCLD 2.5 Gbit/s) or any slot for OCLD 2.5 Gbit/s Flex or OCLD 2.5 Gbit/s Universal	step 9

6 Connect the black Drop pigtail to the RX port of the OCLD circuit pack.

7 Connect the red Add pigtail to the TX port of the OCLD circuit pack.

8 Go to step 15.

9 Connect the FC-FC adaptor to the black Drop pigtail of the OMX.

—continued—

Procedure 3-19 (continued)
Connecting an OMX to OCLD circuit packs

Step	Action
10	Connect the FC end of the FC-FC (or FC-LC) patch cord to the FC-FC adaptor. ***Note 1:*** Make sure that you have secured the FC-FC adaptor to a point on the rack to limit its movement. ***Note 2:*** You can use the Fiber Manager to route the extra slack of the patch cord. Refer to Procedure 8-3 "Guidelines for routing fiber in the Fiber Manager" in *Installing Optical Metro 5200 Shelves and Components*, 323-0701-201.
11	**If** you are connecting to an / **Then** connect OCLD 1.25 Gbit/s or OCLD 2.5 Gbit/s — the other FC end of the FC-FC patch cord to the RX port of the OCLD circuit pack. OCLD 2.5 Gbit/s Flex or OCLD 2.5 Gbit/s Universal — the LC end of the FC-LC patch cord to the RX port of the OCLD circuit pack
12	Connect the FC-FC adaptor to the red Add pigtail of the OMX.
13	Connect the FC end of the FC-FC (or FC-LC) patch cord to the FC-FC adaptor. ***Note 1:*** Make sure that the FC-FC adaptor is secured to a point on the rack to limit its movement. ***Note 2:*** You can use the Fiber Manager to route the extra slack of the patch cord. Refer to Procedure 8-3 "Guidelines for routing fiber in the Fiber Manager" in *Installing Optical Metro 5200 Shelves and Components*, 323-0701-201.
14	**If** you are connecting to an / **Then** connect OCLD 1.25 Gbit/s or OCLD 2.5 Gbit/s — the other FC end of the FC-FC patch cord to the TX port of the OCLD circuit pack. OCLD 2.5 Gbit/s Flex OCLD 2.5 Gbit/s Universal — the LC end of the FC-LC patch cord to the TX port of the OCLD circuit pack
15	Repeat step 3 through step 14 for other OCLD circuit packs, if necessary.

Connecting DWDM OMX 4CH + Fiber Manager or OMX 4CH Enhanced to an OCLD circuit pack

16 Refer to the following table to determine the connections you must make.

DWDM OMX 4CH + Fiber Manager or OMX 4CH Enhanced port label	OCLD circuit pack port label
CH # ADD	TX
CH # DROP	RX

—continued—

Procedure 3-19 (continued)
Connecting an OMX to OCLD circuit packs

Step	Action
17	Connect the SC end of the SC-FC (or SC-LC) patch cord to the CH # DROP port of the OMX.
18	**If** you are connecting to an / **Then** connect OCLD 1.25 Gbit/s or OCLD 2.5 Gbit/s — the FC end of the SC-FC patch cord to the RX port of the OCLD circuit pack. OCLD 2.5 Gbit/s Flex or OCLD 2.5 Gbit/s Universal — the LC end of the SC-LC patch cord to the RX port of the OCLD circuit pack
19	Connect the SC end of the SC-FC (or SC-LC) patch cord to the CH # ADD port of the OMX.
20	**If** you are connecting to an / **Then** connect OCLD 1.25 Gbit/s or OCLD 2.5 Gbit/s — the FC end of the SC-FC patch cord to the TX port of the OCLD circuit pack. OCLD 2.5 Gbit/s Flex or OCLD 2.5 Gbit/s Universal — the LC end of the SC-LC patch cord to the TX port of the OCLD circuit pack
21	Repeat step 16 through step 20 for other OCLD circuit packs, if necessary.

Connecting OMX 16CH DWDM to an OLCD circuit pack

Note: For the OMX 16CH DWDM use LC-LC duplex patch cords to connect OMX 16CH DWDM to an OCLD circuit pack, see "Fiber-optic patch cords" on page 13-97 in *Network Planning and Link Engineering*, 323-1701-110.

22 Refer to the following table to determine the connections you must make.

OMX 16CH DWDM port label	OCLD circuit pack port label
CH # ADD	TX
CH # DROP	RX

23 Connect one end of the LC-LC duplex patch cord to the OMX 16CH DWDM LC-LC sliding adapter which will simultaneously mate the CH # ADD and CH # DROP ports.

24 Connect the other end of the LC-LC duplex patch cord to the OCLD 2.5 Gbit/s Flex or or OCLD 2.5 Gbit/s Universal which will simultaneously mate the RX and TX ports.

25 Repeat step 22 through step 24 for other OCLD circuit packs, if necessary.

—continued—

Procedure 3-19 (continued)
Connecting an OMX to OCLD circuit packs

Step	Action

Connecting OMX 1CH CWDM to an OCLD

26 Refer to the following table to determine the connections you must make.

OMX 1CH CWDM port label	OCLD circuit pack port label
BAND ADD	TX
BAND DROP	RX

27 Connect the SC end of the SC-FC (or SC-LC) patch cord to the BAND DROP port of the OMX 1CH CWDM.

28

If you are connecting to an	**Then** connect
OCLD 1.25 Gbit/s or OCLD 2.5 Gbit/s	the FC end of the SC-FC patch cord to the RX port of the OCLD circuit pack.
OCLD 2.5 Gbit/s Flex or or OCLD 2.5 Gbit/s Universal	the LC end of the SC-LC patch cord to the RX port of the OCLD circuit pack

29 Connect the SC end of the SC-FC (or SC-LC) patch cord to the BAND ADD port of the OMX 1CH CWDM.

30

If you are connecting to an	**Then** connect
OCLD 1.25 Gbit/s or OCLD 2.5 Gbit/s	the FC end of the SC-FC patch cord to the TX port of the OCLD circuit pack.
OCLD 2.5 Gbit/s Flex or or OCLD 2.5 Gbit/s Universal	the LC end of the SC-LC patch cord to the TX port of the OCLD circuit pack

31 Repeat step 26 through step 30 for other OCLD circuit packs, if necessary.

Connecting OMX 4CH CWDM to an OCLD

32 Refer to the following table to determine the connections you must make.

OMX 4CH CWDM port label	OCLD circuit pack port label
BAND # ADD	TX
BAND # DROP	RX

33 Connect the SC end of the SC-FC (or SC-LC) patch cord to the BAND # DROP port of the OMX 4CH CWDM.

—continued—

Procedure 3-19 (continued)
Connecting an OMX to OCLD circuit packs

Step	Action

34 **If** you are connecting to an **Then** connect

OCLD 1.25 Gbit/s or OCLD 2.5 Gbit/s	the FC end of the SC-FC patch cord to the RX port of the OCLD circuit pack.
OCLD 2.5 Gbit/s Flex or OCLD 2.5 Gbit/s Universal	the LC end of the SC-LC patch cord to the RX port of the OCLD circuit pack

35 Connect the SC end of the SC-FC (or SC-LC) patch cord to the BAND # ADD port of the OMX 4CH CWDM.

36 **If** you are connecting to an **Then** connect

OCLD 1.25 Gbit/s or OCLD 2.5 Gbit/s	the FC end of the SC-FC patch cord to the TX port of the OCLD circuit pack.
OCLD 2.5 Gbit/s Flex or OCLD 2.5 Gbit/s Universal	the LC end of the SC-LC patch cord to the TX port of the OCLD circuit pack

37 Repeat step 32 through step 36 for other OCLD circuit packs, if necessary.

Connecting OMX 1CH OADM ITU CWDM, OMX 4CH ITU CWDM, OMX 4CH OADM ITU CWDM or OMX 8CH ITU CWDM to an OCLD

38 Refer to the following table to determine the connections you must make.

OMX 1CH OADM ITU CWDM OMX 4CH ITU CWDM OMX 4CH OADM ITU CWDM or OMX 8CH ITU CWDM port label	OCLD circuit pack port label
<Wavelength nm> ADD	TX
<Wavelength nm> DROP	RX

39 Connect the SC end of the SC-LC patch cord to the <Wavelength nm> DROP port of the ITU CWDM OMX.

40 Connect the LC end of the SC-LC patch cord to the RX port of the OCLD.

41 Connect the SC end of the SC-LC patch cord to the <Wavelength nm> ADD port of the ITU CWDM OMX.

42 Connect the LC end of the SC-LC patch cord to the TX port of the OCLD.

43 Repeat step 38 through step 42 for other OCLD circuit packs, if necessary.

—end—

Figure 3-12
OMX (standard) connected to OCLD circuit packs in slots 1-4, 15-18 (for OCLD 1.25 Gbit/s and OCLD 2.5 Gbit/s)

OM1801t

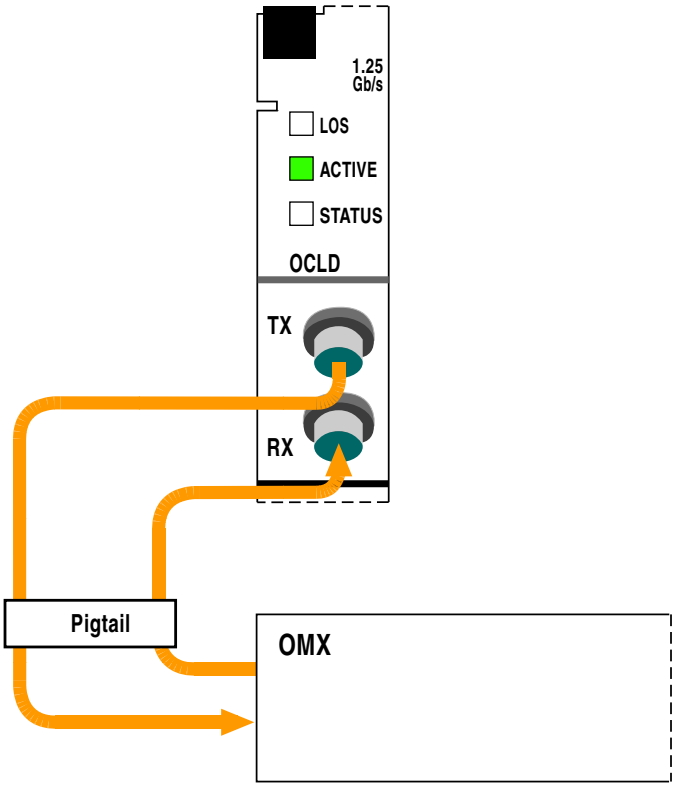

Figure 3-13
OMX (standard) connected to OCLD circuit packs in slots 5-8, 11-14 (for OCLD 1.25 Gbit/s and OCLD 2.5 Gbit/s) or west OMX (standard) connected to OCLD circuit packs in east plane or east OMX (standard) connected to OCLD circuit packs in west plane

OM1538t

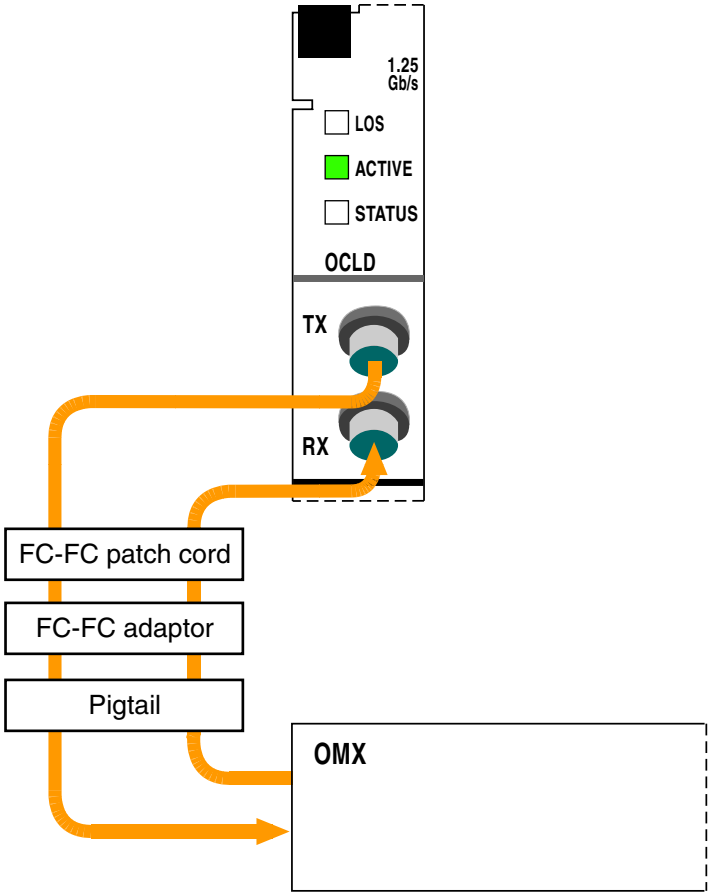

Figure 3-14
OMX (standard) connected to OCLD circuit packs (for OCLD 2.5 Gbit/s Flex)

OM1509t

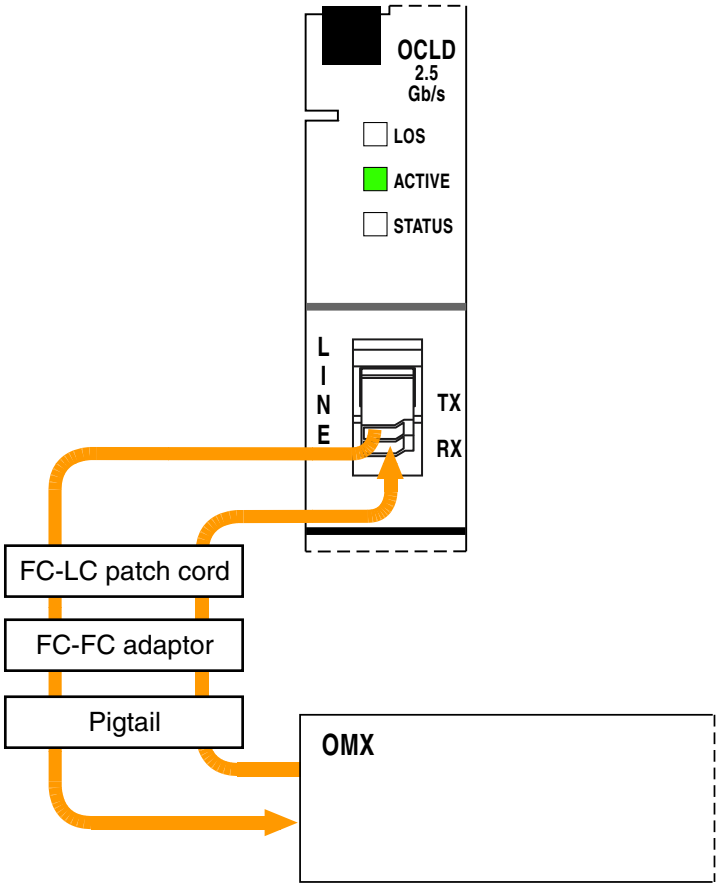

Procedure 3-20
Connecting an OMX to OTR circuit packs

Follow this procedure to connect an OMX to OTR circuit packs.

> ***Note:*** For OTR client side connections, see "Connecting OTR circuit packs to subtending equipment" on page 3-161, or "Connecting OTR circuit packs to subtending equipment through a Transponder Protection Tray" on page 3-167.

Table 3-68 lists OMX compatibility with OTR circuit packs.

Table 3-68
OMX to OTR compatibility

OMX Type	OTR 2.5 Gbits/s Flex	OTR 10 Gbit/s	OTR 10 Gbits/s Enhanced
DWDM (Standard) OMX	yes	yes	yes
DWDM OMX 4CH + FM	yes	yes	yes
OMX 4CH Enhanced	yes	yes	yes
OMX 16CH DWDM	yes	yes	yes
OMX 1CH CWDM	yes	no	yes
OMX 4CH CWDM (with or without dual taps)	yes	no	yes
OMX 1CH OADM ITU CWDM	yes	no	yes
OMX 4CH ITU CWDM OMX 4CH OADM ITU CWDM (with or without pass-thru)	yes	no	yes
OMX 8CH ITU CWDM	yes	no	yes

ATTENTION

Before you begin, ensure that you have determined which OMX pigtails or connectors are to be connected to which OTR circuit packs. For details about planning the connections between OMX modules and OTR circuit packs, see "Guidelines for connecting OMX modules to line-side circuit packs" on page 12-9 in *Network Planning and Link Engineering*, 323-1701-110.

—continued—

Procedure 3-20 (continued)
Connecting an OMX to OTR circuit packs

Requirements

Before you begin this procedure make sure that all connectors are clean and that you are familiar with accessing connectors in an OMX.

— if you are connecting an OTR circuit pack to a DWDM (Standard) OMX then refer to Procedure 1-1, "Accessing connectors in an OMX (Standard) tray"

— if you are connecting an OTR circuit pack to a DWDM OMX 4CH + Fiber Manager or OMX 4CH Enhanced then refer to Procedure 1-2, "Accessing connectors in an OMX 4CH + Fiber Manager or OMX 4 CH Enhanced"

— if you are connecting an OTR circuit pack to an OMX 1CH CWDM then refer to Procedure 1-3, "Accessing connectors in an OMX 1CH CWDM"

— if you are connecting an OTR circuit pack to an OMX 4CH CWDM then refer to Procedure 1-4, "Accessing connectors in an OMX 4CH CWDM"

— if you are connecting an OTR circuit pack to an OMX 1CH OADM ITU CWDM then refer to Procedure 1-5 "Accessing connectors in an OMX 1CH OADM ITU CWDM"

— if you are connecting an OTR circuit pack to an OMX 4CH ITU CWDM or OMX 4CH OADM ITU CWDM then refer to Procedure 1-6 "Accessing connectors in an OMX 4CH ITU CWDM or OMX 4CH OADM ITU CWDM"

— if you are connecting an OTR circuit pack to an OMX 8CH ITU CWDM then refer to Procedure 1-7 "Accessing connectors in an OMX 8CH ITU CWDM"

— if you are connecting an OTR circuit pack to an OMX 16CH DWDM then refer to Procedure 1-8 "Accessing connectors in an OMX 16CH DWDM"

For information on cleaning, see "Cleaning connectors" in *Installing Optical Metro 5200 Shelves and Components*, 323-1701-201.

—continued—

Procedure 3-20 (continued)
Connecting an OMX to OTR circuit packs

Table 3-69 lists the tools and materials required to complete the procedure.

Table 3-69
Required tools and materials

Item	Quantity	Supplied
Antistatic wrist and heel straps	1	no
Fiber-optic cleaning kit	1	no
Fiber inspection scope	1	no
Phillips #1 screwdriver required only if OMX type is DWDM (Standard)	1	no
Phillips #2 screwdriver required only if OMX type is OMX 16CH DWDM	1	no
Optical patch cords (see Note)	see text following this table	order from Nortel Networks
Note: Refer to "Fiber-optic patch cords" on page 13-97 in *Network Planning and Link Engineering*, 323-1701-110.		

—continued—

Procedure 3-20 (continued)
Connecting an OMX to OTR circuit packs

For an OMX (Standard) you must extend the length of the OMX pigtail using a patch cord with an adaptor that connects to the OMX pigtail, and a connector that connects to the OTR circuit pack. Use a FC-LC patch cord and a FC-FC adaptor (for the pigtail) to connect the OMX to an OTR circuit pack (see Figure 3-17 on page 3-148 for an OTR example).

> ***Note:*** You can use the Fiber Manager to route the extra slack of the patch cords. Refer to Procedure 8-3 "Guidelines for routing fiber in the Fiber Manager" in *Installing Optical Metro 5200 Shelves and Components*, 323-0701-201.

For OMX 16CH DWDM, use LC-LC duplex patch cords to connect this OMX to an OTR line-side.

For all the other OMXs, except OMX 16CH DWDM, use SC-LC duplex patch cords to connect these OMX types to an OTR (see Figure 3-18 on page 3-149 for an OTR example).

> ***Note:*** Before you begin this procedure, complete the fiber routing within the OMX drawers, and secure the patch cords to the vertical rack rail.

For fiber routing procedures for 5200 shelf components, refer to the "Fiber management"chapter in *Installing Optical Metro 5200 Shelves and Components*, 323-1701-201. For fiber routing procedures for 5100 shelf components, refer to the "Fiber management" chapter in *Installing Optical Metro 5100 Shelves and Components*, 323-1701-210.

—continued—

Procedure 3-20 (continued)
Connecting an OMX to OTR circuit packs

Precautions

DANGER
Invisible laser radiation
The Optical Metro 5100/5200 operates up to a Hazard Level of k x 3A (IEC 60825-2:2000) or 1M (IEC 60825-2:2004). Use only viewing instruments with proper optical attenuation.

CAUTION
Risk of affecting network reliability
Make sure that all connectors are cleaned before you make the connections (or re-connections) described in this procedure. For cleaning information, see the chapter "Cleaning connectors", in *Installing Optical Metro 5200 Shelves and Components*, 323-1701-201.

CAUTION
Possible risk of damage to equipment and fiber
Make sure that the bulkhead connectors are lowered and snapped into place before you close the drawers. In the case of an OMX 16CH DWDM, make sure that the sliders are pushed fully to the rear before closing the front cover. Failure to do so could cause damage to the connector unit, the fibers attached to the connector unit, or both.

Observe the minimum bend radius of 1.18 inches (30 mm) for the patch cords. Always use the fiber management components in the drawer to route the fiber.

Allow for sufficient slack in the fibers that enter and exit the drawers. If sufficient slack is not left, the fibers can become stretched and damaged when the drawer is opened.

—continued—

Procedure 3-20 (continued)
Connecting an OMX to OTR circuit packs

Action

Step	Action

1 When you make OMX connections to newly inserted OTRs, ensure that the circuit pack is not fully inserted in the shelf.

2

If you are connecting OTR circuit pack to	**Then** follow
DWDM (Standard) OMX	step 3 to step 10
DWDM OMX 4CH + Fiber Manager or OMX 4 CH Enhanced	step 11 to step 16
OMX 16CH DWDM	step 17 to step 20
OMX 1CH CWDM	step 21 to step 26
OMX 4CH CWDM	step 27 to step 32
OMX 1CH OADM ITU CWDM	step 33 to step 37
OMX 4CH ITU CWDM or OMX 4CH OADM ITU CWDM	step 33 to step 37
OMX 8CH ITU CWDM	step 33 to step 37

Connecting DWDM (Standard) OMX to an OTR circuit pack

3 Refer to the following table to determine the connections you must make.

DWDM (Standard) OMX port label	OTR circuit pack port label
BAND # CH # ADD	LINE TX
BAND # CH # DROP	LINE RX

4 Identify the pigtails that originate at each side of the OMX tray as illustrated in the following example.

—continued—

Procedure 3-20 (continued)
Connecting an OMX to OTR circuit packs

Step	Action

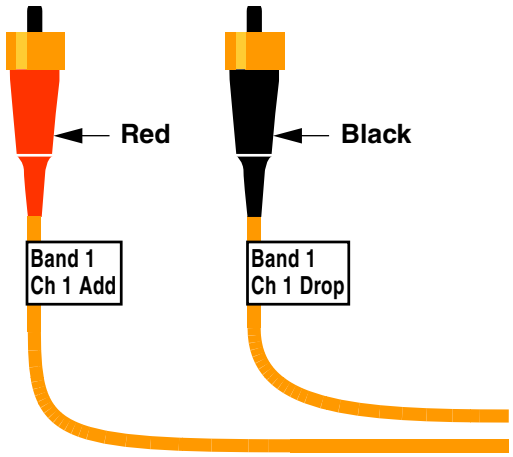

5 Connect the FC-FC adaptor to the black Drop pigtail of the OMX.

6 Connect the FC end of the FC-LC patch cord to the FC-FC adaptor.

Note 1: Make sure that you have secured the FC-FC adaptor to a point on the rack to limit its movement.

Note 2: You can use the Fiber Manager to route the extra slack of the patch cord. Refer to Procedure 8-3 "Guidelines for routing fiber in the Fiber Manager" in *Installing Optical Metro 5200 Shelves and Components*, 323-0701-201.

7 Connect the LC end of the FC-LC patch cord to the LINE RX port of the OTR circuit pack.

8 Connect the FC-FC adaptor to the red Add pigtail of the OMX.

9 Connect the FC end of the FC-LC patch cord to the FC-FC adaptor.

Note 1: Make sure that you have secured the FC-FC adaptor to a point on the rack to limit its movement.

Note 2: You can use the Fiber Manager to route the extra slack of the patch cord. Refer to Procedure 8-3 "Guidelines for routing fiber in the Fiber Manager" in *Installing Optical Metro 5200 Shelves and Components*, 323-0701-201.

10 Connect the LC end of the FC-LC patch cord to the LINE TX port of the OTR circuit pack.

11 Repeat step 3 through step 10 for other OTR circuit packs, if necessary.

—continued—

Procedure 3-20 (continued)
Connecting an OMX to OTR circuit packs

Step	Action

Connecting DWDM OMX 4CH + Fiber Manager or OMX 4 CH Enhanced to an OTR circuit pack

12 Refer to the following table to determine the connections you will make:

DWDM OMX 4CH + Fiber Manager port label	OTR circuit pack port label
CH # ADD	LINE TX
CH # DROP	LINE RX

13 Connect the SC end of the SC-LC patch cord to the CH # DROP port of the OMX.

14 Connect the LC end of the SC-LC patch cord to the LINE RX port of the OTR circuit pack.

15 Connect the SC end of the SC-LC patch cord to the CH # ADD port of the OMX.

16 Connect the LC end of the SC-LC patch cord to the LINE TX port of the OTR circuit pack.

17 Repeat step 11 through step 15 for other OTR circuit packs, if necessary.

Connecting OMX 16CH DWDM to an OTR circuit pack

18 Refer to the following table to determine the connections you will make:

OMX 16CH DWDM port label	OTR circuit pack port label
CH # ADD	LINE TX
CH # DROP	LINE RX

19 Connect the one end of LC-LC duplex patch cord to the OMX 16CH DWDM LC-LC sliding adapter which will simultaneously mate the CH # ADD and CH # DROP ports.

20 Connect the other end of the LC-LC duplex patch cord to the OTR circuit pack's line ports which will simultaneously mate the LINE RX and LINE TX ports.

21 Repeat step 17 through step 19 for other OTR circuit packs, if necessary.

—continued—

Procedure 3-20 (continued)
Connecting an OMX to OTR circuit packs

Step	Action

Connecting OMX 1CH CWDM to an OTR circuit pack

22 Refer to the following table to determine the connections you must make.

OMX 1CH CWDM port label	OTR circuit pack port label
BAND ADD	LINE TX
BAND DROP	LINE RX

23 Connect the SC end of the SC-LC patch cord to the BAND DROP port of the OMX 1CH CWDM.

24 Connect the LC end of the SC-LC patch cord to the LINE RX port of the OTR circuit pack.

25 Connect the SC end of the SC-LC patch cord to the BAND ADD port of the OMX 1CH CWDM.

26 Connect the LC end of the SC-LC patch cord to the LINE TX port of the OTR circuit pack.

27 Repeat step 21 through step 25 for other OTR circuit packs, if necessary.

Connecting OMX 4CH CWDM to an OTR circuit pack

28 Refer to the following table to determine the connections you must make.

OMX 4CH CWDM port label	OTR circuit pack port label
BAND # ADD	LINE TX
BAND # DROP	LINE RX

29 Connect the SC end of the SC-LC patch cord to the BAND # DROP port of the OMX 4CH CWDM.

30 Connect the LC end of the SC-LC patch cord to the LINE RX port of the OTR circuit pack.

31 Connect the SC end of the SC-LC patch cord to the BAND # ADD port of the OMX 4CH CWDM.

—continued—

Procedure 3-20 (continued)
Connecting an OMX to OTR circuit packs

Step	Action
32	Connect the LC end of the SC-LC patch cord to the LINE TX port of the OTR circuit pack.
33	Repeat step 27 through step 31 for other OTR circuit packs, if necessary.

Connecting an OMX 1CH OADM ITU CWDM, OMX 4CH ITU CWDM, OMX 4CH OADM ITU CWDM or OMX 8CH ITU CWDM to an OTR circuit pack

34 Refer to the following table to determine the connections you must make.

OMX 1CH OADM ITU CWDM OMX 4CH ITU CWDM OMX 4CH OADM ITU CWDM or OMX 8CH ITU CWDM port label	OTR circuit pack port label
<Wavelength nm> ADD	LINE TX
<Wavelength nm> DROP	LINE RX

35 Connect the SC end of the SC-LC patch cord to the <Wavelength nm> DROP port of the ITU CWDM OMX.

36 Connect the LC end of the SC-LC patch cord to the LINE RX port of the OTR circuit pack.

37 Connect the SC end of the SC-LC patch cord to the <Wavelength nm> ADD port of the ITU CWDM OMX.

38 Connect the LC end of the SC-LC patch cord to the LINE TX port of the OTR circuit pack.

39 Repeat step 33 through step 37 for other OTR circuit packs, if necessary.

—end—

Figure 3-15
Connecting the OMX (Standard) to OTR circuit packs

OM1802

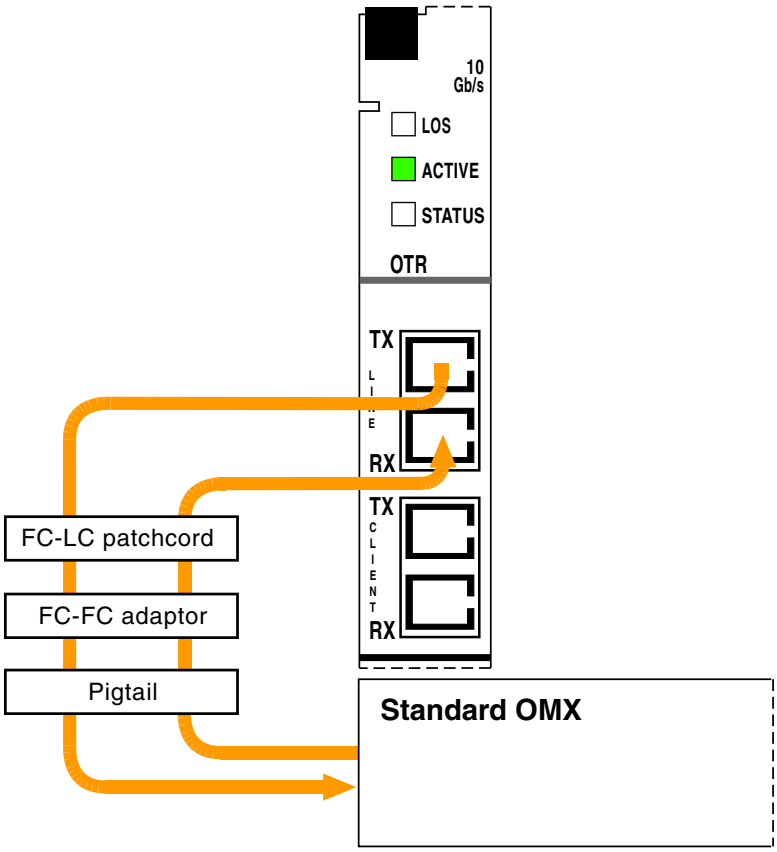

Figure 3-16
Connecting the OMX 4CH + Fiber Manager to OTR circuit packs

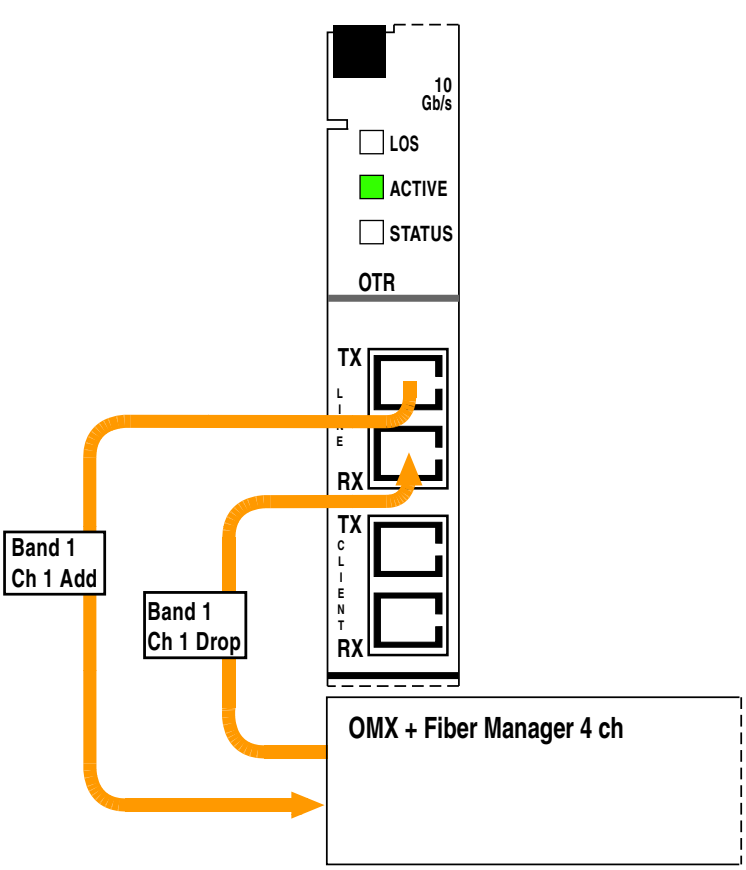

Procedure 3-21
Connecting an OMX to Muxponder (MOTR) circuit packs

Follow this procedure to connect an OMX to Muxponder circuit pack's line side ports.

> ***Note:*** For Muxponder client side connections, see "Connecting between Muxponder client interfaces and subtending equipment for bidirectional GbE traffic" on page 3-239, or "Connecting between Muxponder client interfaces and subtending equipment for unidirectional GbE traffic" on page 3-253.

ATTENTION

Before you begin, ensure that you have determined which OMX pigtails or connectors are to be connected to Muxponder circuit packs. Note that the patch cord which connects to the Muxponder line side ports must have a 45° boot on one LC end. For details about planning the connections between OMX modules and Muxponder circuit packs, see "Guidelines for connecting OMX modules to line-side circuit packs" on page 12-9 in *Network Planning and Link Engineering*, 323-1701-110.

Requirements

Before you begin this procedure make sure that all connectors are clean and that you are familiar with accessing connectors in an OMX.

— if you are connecting a Muxponder circuit pack to a DWDM (Standard) OMX then refer to Procedure 1-1, "Accessing connectors in an OMX (Standard) tray"

— if you are connecting a Muxponder circuit pack to a DWDM OMX 4CH + Fiber Manager or OMX 4CH Enhanced then refer to Procedure 1-2, "Accessing connectors in an OMX 4CH + Fiber Manager or OMX 4 CH Enhanced"

— if you are connecting a Muxponder circuit pack to an OMX 1CH CWDM then refer to Procedure 1-3, "Accessing connectors in an OMX 1CH CWDM"

— if you are connecting a Muxponder circuit pack to an OMX 4CH CWDM then refer to Procedure 1-4, "Accessing connectors in an OMX 4CH CWDM"

—continued—

Procedure 3-21 (continued)
Connecting an OMX to Muxponder (MOTR) circuit packs

— if you are connecting a Muxponder circuit pack to an OMX 1CH OADM ITU CWDM then refer to Procedure 1-5 "Accessing connectors in an OMX 1CH OADM ITU CWDM"

— if you are connecting a Muxponder circuit pack to an OMX 4CH ITU CWDM, OMX 4CH OADM ITU CWDM then refer to Procedure 1-6 "Accessing connectors in an OMX 4CH ITU CWDM or OMX 4CH OADM ITU CWDM"

— if you are connecting a Muxponder circuit pack to an OMX 8CH ITU CWDM then refer to Procedure 1-7 "Accessing connectors in an OMX 8CH ITU CWDM"

— if you are connecting a Muxponder circuit pack to an OMX 16CH DWDM then refer to Procedure 1-8 "Accessing connectors in an OMX 16CH DWDM"

For information on cleaning, see "Cleaning connectors" in *Installing Optical Metro 5200 Shelves and Components*, 323-1701-201.

Table 3-70 lists the tools and materials required to complete the procedure.

Table 3-70
Required tools and materials

Item	Quantity	Supplied
Antistatic wrist and heel straps	1	no
Fiber-optic cleaning kit	1	no
Fiber inspection scope	1	no
Phillips #1 screwdriver required only if OMX type is DWDM (Standard)	1	no
Phillips #2 screwdriver required only if OMX type is OMX 16CH DWDM	1	no
Optical patch cords (see Note 1, Note 2)	see text following this table	order from Nortel Networks
Note 1: Refer to "Fiber-optic patch cords" on page 13-97 in *Network Planning and Link Engineering*, 323-1701-110. ***Note 2:*** Ensure that your patch cord which connects to the Muxponder line side ports has a 45° boot on one LC end.		

—continued—

Procedure 3-21 (continued)
Connecting an OMX to Muxponder (MOTR) circuit packs

For an OMX (Standard) you must extend the length of the OMX pigtail using a patch cord with an FC adaptor that connects to the OMX pigtail, and a connector that connects to the Muxponder circuit pack. Use an LC-LC patch cord (with a 45° boot on one LC end), LC-LC adapter and an FC-LC patch cord (for the pigtail) to connect the OMX to a Muxponder circuit pack (see Figure 3-17 on page 3-148 for an example).

> ***Note:*** You can use the Fiber Manager to route the extra slack of the patch cords. Refer to Procedure 8-3 "Guidelines for routing fiber in the Fiber Manager" in *Installing Optical Metro 5200 Shelves and Components*, 323-0701-201.

For OMX 16CH DWDM, use LC-LC duplex patch cords (with a 45° boot on one LC end) to connect this OMX to a Muxponder line-side.

For all the other OMXs, except OMX 16CH DWDM, use SC-LC duplex patch cords (with a 45° boot on one LC end) to connect these OMX types to a Muxponder (see Figure 3-18 on page 3-149 for an example).

> ***Note:*** Before you begin this procedure, complete the fiber routing within the OMX drawers, and secure the patch cords to the vertical rack rail.

For fiber routing procedures for 5200 shelf components, refer to the "Fiber management"chapter in *Installing Optical Metro 5200 Shelves and Components*, 323-1701-201. For fiber routing procedures for 5100 shelf components, refer to the "Fiber management" chapter in *Installing Optical Metro 5100 Shelves and Components*, 323-1701-210.

—continued—

Procedure 3-21 (continued)
Connecting an OMX to Muxponder (MOTR) circuit packs

Precautions

DANGER
Invisible laser radiation
The Optical Metro 5100/5200 operates up to a Hazard Level of k x 3A (IEC 60825-2:2000) or 1M (IEC 60825-2:2004). Use only viewing instruments with proper optical attenuation.

CAUTION
Risk of affecting network reliability
Make sure that all connectors are cleaned before you make the connections (or re-connections) described in this procedure. For cleaning information, see the chapter "Cleaning connectors", in *Installing Optical Metro 5200 Shelves and Components*, 323-1701-201.

CAUTION
Possible risk of damage to equipment and fiber
Make sure that the bulkhead connectors are lowered and snapped into place before you close the drawers. In the case of an OMX 16CH DWDM, make sure that the sliders are pushed fully to the rear before closing the front cover. Failure to do so could cause damage to the connector unit, the fibers attached to the connector unit, or both.

Observe the minimum bend radius of 1.18 inches (30 mm) for the patch cords. Always use the fiber management components in the drawer to route the fiber.

Allow for sufficient slack in the fibers that enter and exit the drawers. If sufficient slack is not left, the fibers can become stretched and damaged when the drawer is opened.

—continued—

Procedure 3-21 (continued)
Connecting an OMX to Muxponder (MOTR) circuit packs

Action

Step	Action

1 When you make OMX connections to a newly inserted Muxponder circuit pack, ensure that the circuit pack is not fully inserted in the shelf.

2

If you are connecting the Muxponder circuit pack to	**Then** follow
DWDM (Standard) OMX	step 3 to step 10
DWDM OMX 4CH + Fiber Manager or OMX 4 CH Enhanced	step 11 to step 16
OMX 16CH DWDM	step 17 to step 20
OMX 1CH CWDM	step 21 to step 26
OMX 4CH CWDM	step 27 to step 32
OMX 1CH OADM ITU CWDM	step 33 to step 37
OMX 4CH ITU CWDM, OMX 4CH OADM ITU CWDM	step 33 to step 37
OMX 8CH ITU CWDM	step 33 to step 37

Connecting DWDM (Standard) OMX to a Muxponder circuit pack

3 Refer to the following table to determine the connections you must make.

DWDM (Standard) OMX port label	Muxponder circuit pack port label
BAND # CH # ADD	LINE TX
BAND # CH # DROP	LINE RX

4 Identify the pigtails that originate at each side of the OMX tray as illustrated in the following example.

—continued—

Procedure 3-21 (continued)
Connecting an OMX to Muxponder (MOTR) circuit packs

Step	Action

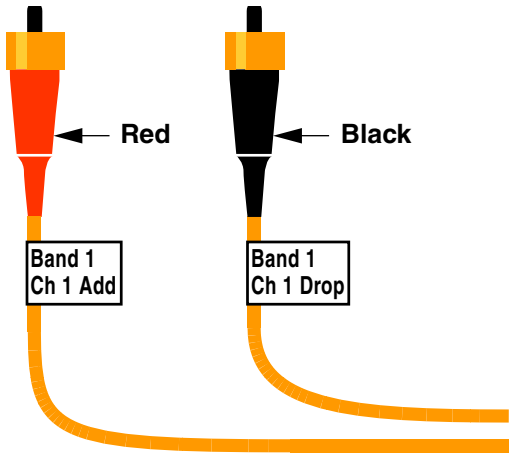

Note: For an illustration of the following steps, refer to Figure 3-17 on page 3-148.

5 Connect an FC-FC adaptor to the black Drop pigtail of the OMX.

6 Connect an FC-FC adaptor to the red Add pigtail of the OMX.

7 Connect both FC ends of the FC-LC patch cord to the FC-FC adaptors.

Note 1: The FC-LC patch cord is a straight boot for both FC and LC connectors.

Note 2: Make sure that you have secured the FC-FC adaptor to a point on the rack to limit its movement.

Note 3: You can use the Fiber Manager to route the extra slack of the patch cord. Refer to Procedure 8-3 "Guidelines for routing fiber in the Fiber Manager" in *Installing Optical Metro 5200 Shelves and Components*, 323-1701-201.

8 Obtain an LC-LC patch cord that has one end a straight boot and the other a 45° boot and connect the duplex 45° boot LC end of the LC-LC patch cord to the LINE TX/RX ports of the Muxponder circuit pack.

9 Interconnect the two patch cords (all loose LC ends) via the LC-LC adaptor.

10 Repeat step 3 through step 9 for other Muxponder circuit packs, if necessary.

—continued—

Procedure 3-21 (continued)
Connecting an OMX to Muxponder (MOTR) circuit packs

Step	Action

Connecting DWDM OMX 4CH + Fiber Manager or OMX 4 CH Enhanced to a Muxponder circuit pack

11 Refer to the following table to determine the connections you will make:

DWDM OMX 4CH + Fiber Manager port label	Muxponder circuit pack port label
CH # ADD	LINE TX
CH # DROP	LINE RX

12 Connect the straight boot SC end of the SC-LC patch cord to the CH # DROP port of the OMX.

13 Connect the 45° boot LC end of the SC-LC patch cord to the LINE RX port of the Muxponder circuit pack.

14 Connect the straight boot SC end of the SC-LC patch cord to the CH # ADD port of the OMX.

15 Connect the 45° boot LC end of the SC-LC patch cord to the LINE TX port of the Muxponder circuit pack.

16 Repeat step 11 through step 15 for other Muxponder circuit packs, if necessary.

Connecting OMX 16CH DWDM to a Muxponder circuit pack

17 Refer to the following table to determine the connections you will make:

OMX 16CH DWDM port label	Muxponder circuit pack port label
CH # ADD	LINE TX
CH # DROP	LINE RX

18 Connect the straight boot LC end of LC-LC duplex patch cord to the OMX 16CH DWDM LC-LC sliding adapter which will simultaneously mate the CH # ADD and CH # DROP ports.

19 Connect the 45° boot LC end of the LC-LC duplex patch cord to the Muxponder circuit pack's line ports which will simultaneously mate the LINE RX and LINE TX ports.

20 Repeat step 17 through step 19 for other Muxponder circuit packs, if necessary.

—continued—

Procedure 3-21 (continued)
Connecting an OMX to Muxponder (MOTR) circuit packs

Step	Action

Connecting OMX 1CH CWDM to a Muxponder circuit pack

21 Refer to the following table to determine the connections you must make.

OMX 1CH CWDM port label	Muxponder circuit pack port label
BAND ADD	LINE TX
BAND DROP	LINE RX

22 Connect the straight boot SC end of the SC-LC patch cord to the BAND DROP port of the OMX 1CH CWDM.

23 Connect the 45° boot LC end of the SC-LC patch cord to the LINE RX port of the Muxponder circuit pack.

24 Connect the straight boot SC end of the SC-LC patch cord to the BAND ADD port of the OMX 1CH CWDM.

25 Connect the 45° boot LC end of the SC-LC patch cord to the LINE TX port of the Muxponder circuit pack.

26 Repeat step 21 through step 25 for other Muxponder circuit packs, if necessary.

Connecting OMX 4CH CWDM to a Muxponder circuit pack

27 Refer to the following table to determine the connections you must make.

OMX 4CH CWDM port label	Muxponder circuit pack port label
BAND # ADD	LINE TX
BAND # DROP	LINE RX

28 Connect the straight boot SC end of the SC-LC patch cord to the BAND # DROP port of the OMX 4CH CWDM.

29 Connect the 45° boot LC end of the SC-LC patch cord to the LINE RX port of the Muxponder circuit pack.

30 Connect the straight boot SC end of the SC-LC patch cord to the BAND # ADD port of the OMX 4CH CWDM.

—continued—

Procedure 3-21 (continued)
Connecting an OMX to Muxponder (MOTR) circuit packs

Step	Action
31	Connect the 45° boot LC end of the SC-LC patch cord to the LINE TX port of the Muxponder circuit pack.
32	Repeat step 27 through step 31 for other Muxponder circuit packs, if necessary.

Connecting an OMX 1CH OADM ITU CWDM, OMX 4CH ITU CWDM, OMX 4CH OADM ITU CWDM or OMX 8CH ITU CWDM to a Muxponder circuit pack

33 Refer to the following table to determine the connections you must make.

OMX 1CH OADM ITU CWDM OMX 4CH ITU CWDM OMX 4CH OADM ITU CWDM or OMX 8CH ITU CWDM port label	Muxponder circuit pack port label
<Wavelength nm> ADD	LINE TX
<Wavelength nm> DROP	LINE RX

34 Connect the straight boot SC end of the SC-LC patch cord to the <Wavelength nm> DROP port of the ITU CWDM OMX.

35 Connect the 45° boot LC end of the SC-LC patch cord to the LINE RX port of the Muxponder circuit pack.

36 Connect the straight boot SC end of the SC-LC patch cord to the <Wavelength nm> ADD port of the ITU CWDM OMX.

37 Connect the 45° boot LC end of the SC-LC patch cord to the LINE TX port of the Muxponder circuit pack.

38 Repeat step 33 through step 37 for other Muxponder circuit packs, if necessary.

—end—

Figure 3-17
Connecting the OMX (Standard) to Muxponder 10 Gbit/s GbE/FC circuit packs

OM2561t

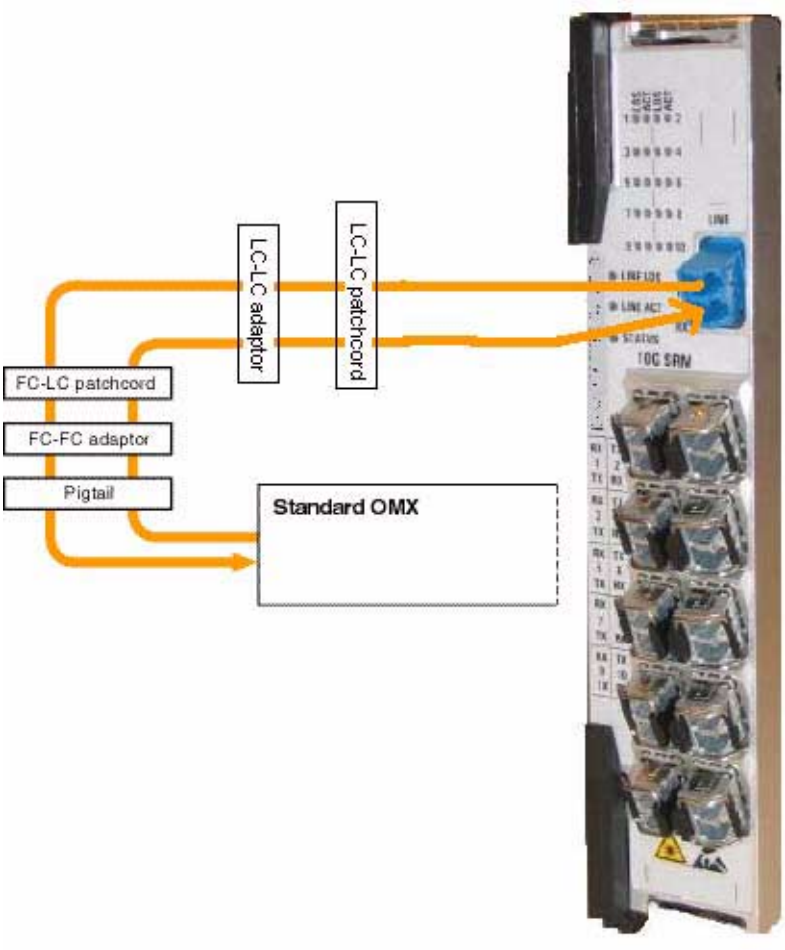

Figure 3-18
Connecting the OMX 4CH + Fiber Manager to Muxponder 10 Gbit/s GbE/FC circuit packs

OM2652t

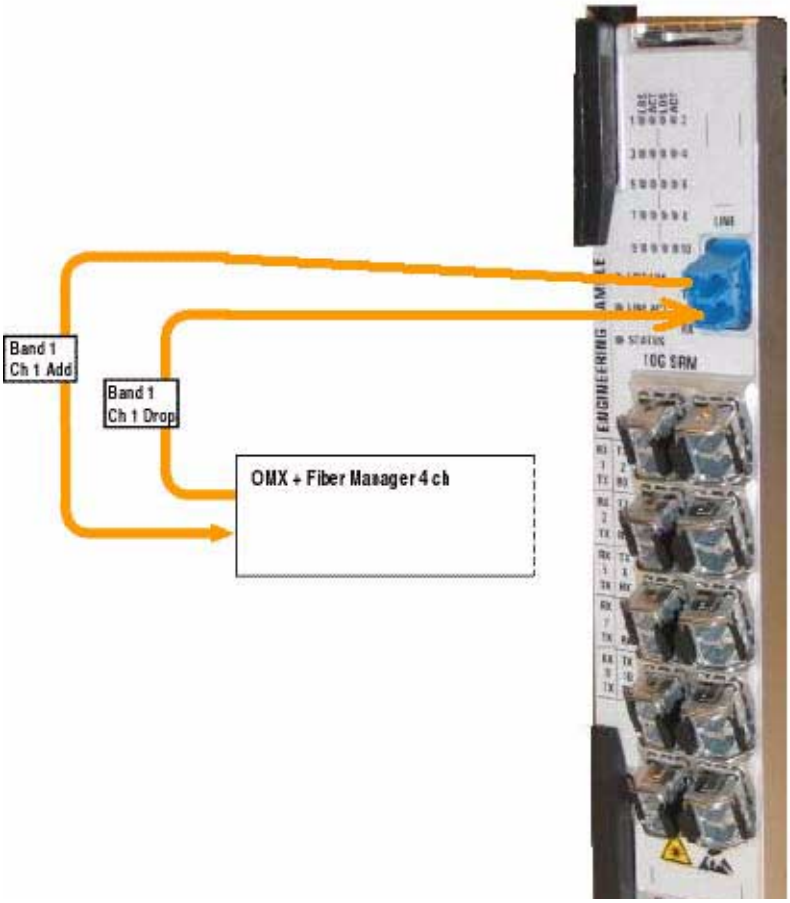

Procedure 3-22
Connecting an OMX to OCLD filler cards or LC filler cards

Follow this procedure to connect an OMX to OCLD filler cards or LC filler cards. This procedure can be used for pre-fibering, which is an optional exercise.

This procedure can be used for any OMX type except the DWDM (Standard) OMX. To connect the DWDM (Standard) OMX to OCLD filler cards, follow Procedure 3-23 "Connecting unused OMX pigtails to OCLD filler cards".

Requirements

Before you begin this procedure, make sure that all connectors are clean and that you are familiar with how to access connectors in an OMX. Refer to the following procedures in part 1 of this document

— if you are connecting a DWDM OMX 4CH + Fiber Manager to an OCLD filler card or an LC filler card then refer to Procedure 1-2, "Accessing connectors in an OMX 4CH + Fiber Manager or OMX 4 CH Enhanced".

— if you are connecting an OMX 1CH CWDM to an OCLD filler card or an LC filler card then refer to Procedure 1-3, "Accessing connectors in an OMX 1CH CWDM".

— if you are connecting an OMX 4CH CWDM to an OCLD filler card or an LC filler card then refer to Procedure 1-4, "Accessing connectors in an OMX 4CH CWDM".

— if you are connecting an OMX 1CH OADM ITU CWDM to an LC filler card then refer to Procedure 1-5 "Accessing connectors in an OMX 1CH OADM ITU CWDM".

— if you are connecting an OMX 4CH ITU CWDM, OMX 4CH OADM ITU CWDM to an LC filler card then refer to Procedure 1-6 "Accessing connectors in an OMX 4CH ITU CWDM or OMX 4CH OADM ITU CWDM".

— if you are connecting an OMX 8CH ITU CWDM to an LC filler card then refer to Procedure 1-7 "Accessing connectors in an OMX 8CH ITU CWDM".

— if you are connecting an OMX 16CH DWDM to an OCLD filler card then refer to Procedure 1-8 "Accessing connectors in an OMX 16CH DWDM".

—continued—

Procedure 3-22 (continued)
Connecting an OMX to OCLD filler cards or LC filler cards

Table 3-71 lists the tools and materials you require to complete this procedure.

Table 3-71
Required tools and materials

Item	Quantity	Supplied
Antistatic wrist and heel straps	1	no
Fiber-optic cleaning kit	1	no
Fiber inspection scope	1	no
• SC to LC SMF duplex optical patch cord (see Note), or • SC to FC SMF duplex optical patch cord (see Note), or • LC to LC SMF duplex optical patch cord (see Note)	• 1 for each LC filler card, or • 1 for each OCLD filler card or • 1 for each LC filler card	order from Nortel Networks
Note: Refer to "Fiber-optic patch cords" on page 13-97 in *Network Planning and Link Engineering*, 323-1701-110.		

—continued—

Procedure 3-22 (continued)
Connecting an OMX to OCLD filler cards or LC filler cards

> ***Note:*** Before you begin this procedure, complete the fiber routing within the OMX drawers, and secure the patch cords to the vertical rack rail.

For fiber routing procedures for 5200 shelf components, refer to the "Fiber management" chapter in *Installing Optical Metro 5200 Shelves and Components*, 323-1701-201. For fiber routing procedures for 5100 shelf components, refer to the "Fiber management" chapter in *Installing Optical Metro 5100 Shelves and Components*, 323-1701-210.

Precautions

DANGER
Invisible laser radiation
The Optical Metro 5100/5200 operates up to a Hazard Level of k x 3A (IEC 60825-2:2000) or 1M (IEC 60825-2:2004). Use only viewing instruments with proper optical attenuation.

CAUTION
Risk of affecting network reliability
You must clean the fiber connectors before you make connections to ensure network reliability.

—continued—

Procedure 3-22 (continued)
Connecting an OMX to OCLD filler cards or LC filler cards

CAUTION
Possible risk of damage to equipment and fiber
Make sure that the bulkhead connectors are lowered and snapped into place before you close the drawers. In the case of an OMX 16CH DWDM, make sure that the sliders are pushed fully to the rear before closing the front cover. Failure to do so could cause damage to the connector unit, the fibers attached to the connector unit, or both.

Observe the minimum bend radius of 1.18 inches (30 mm) for the patch cords. Always use the fiber management components in the drawer to route the fiber.

Allow for sufficient slack in the fibers that enter and exit the drawers. If sufficient slack is not left, the fibers can become stretched and damaged when the drawer is opened.

Action

Step	Action	
1	**If** you are connecting	**Then** follow
	DWDM OMX 4CH + Fiber Manager or OMX 4 CH Enhanced to an OCLD filler card or an LC filler card	step 2 to step 7
	OMX 16CH DWDM to an LC filler card	step 8 to step 11
	OMX 1CH CWDM to an OCLD filler card or an LC filler card	step 12 to step 17
	OMX 4CH CWDM to an OCLD filler card or an LC filler card	step 18 to step 23
	OMX 1CH OADM ITU CWDM to an LC filler card	step 24 to step 28
	OMX 4CH ITU CWDM or OMX 4CH OADM ITU CWDM to an LC filler card	step 24 to step 28
	OMX 8CH ITU CWDM to an LC filler card	step 24 to step 28

—continued—

Procedure 3-22 (continued)
Connecting an OMX to OCLD filler cards or LC filler cards

Connecting DWDM OMX 4CH + Fiber Manager or OMX 4 CH Enhanced to an OCLD filler card or an LC filler card

2 Refer to the following table to determine the connections you must make.

DWDM OMX 4CH + Fiber Manager or OMX 4 CH Enhanced port label	OCLD filler card or LC filler card port label
CH # ADD	TX
CH # DROP	RX

3 Connect the SC end of the SC-FC (or SC-LC) patch cord to the CH # DROP port of the OMX.

4

If you are connecting to an	**Then** connect
OCLD filler card	the FC end of the SC-FC patch cord to the RX port of the OCLD filler card.
LC filler card	the LC end of the SC-LC patch cord to the RX port of the LC filler card.

5 Connect the SC end of the SC-FC (or SC-LC) patch cord to the CH # ADD port of the OMX.

6

If you are connecting to an	**Then** connect
OCLD filler card	the FC end of the SC-FC patch cord to the TX port of the OCLD filler card.
LC filler card	the LC end of the SC-LC patch cord to the TX port of the LC filler card.

7 Repeat step 2 through step 6 for other OCLD filler cards or LC filler cards, if necessary.

Connecting OMX 16CH DWDM to an LC filler card

8 Refer to the following table to determine the connections you must make.

OMX 16CH DWDM port label	LC filler card port label
CH # ADD	TX
CH # DROP	RX

9 Connect one end of LC-LC duplex patch cord to the OMX 16CH DWDM LC-LC sliding adapter which will simultaneously mate the CH # ADD and CH # DROP ports.

10 Connect the other end of the LC-LC duplex patch cord to the LC Filler card's ports which will simultaneously mate the LINE RX and LINE TX ports.

11 Repeat step 8 through step 10 for other LC filler cards, if necessary.

—continued—

Procedure 3-22 (continued)
Connecting an OMX to OCLD filler cards or LC filler cards

Step	Action

Connecting OMX 1CH CWDM to an OCLD filler card or an LC filler card

12 Refer to the following table to determine the connections you must make.

OMX 1CH CWDM port label	OCLD filler card or LC filler card port label
BAND ADD	TX
BAND DROP	RX

13 Connect the SC end of the SC-FC (or SC-LC) patch cord to the BAND DROP port of the OMX 1CH CWDM.

14

If you are connecting to an	**Then** connect
OCLD filler card	the FC end of the SC-FC patch cord to the RX port of the OCLD filler card.
LC filler card	the LC end of the SC-LC patch cord to the RX port of the LC filler card.

15 Connect the SC end of the SC-FC (or SC-LC) patch cord to the BAND ADD port of the OMX 1CH CWDM.

16

If you are connecting to an	**Then** connect
OCLD filler card	the FC end of the SC-FC patch cord to the TX port of the OCLD filler card.
LC filler card	the LC end of the SC-LC patch cord to the TX port of the LC filler card.

17 Repeat step 12 through step 16 for other OCLD filler cards or LC filler cards, if necessary.

—continued—

Procedure 3-22 (continued)
Connecting an OMX to OCLD filler cards or LC filler cards

Step	Action

Connecting OMX 4CH CWDM to an OCLD filler card or LC filler card

18 Refer to the following table to determine the connections you must make.

OMX 4CH CWDM port label	OCLD filler card or LC filler card port label
BAND # ADD	TX
BAND # DROP	RX

19 Connect the SC end of the SC-FC (or SC-LC) patch cord to the BAND # DROP port of the OMX 4CH CWDM.

20

If you are connecting to an	**Then** connect
OCLD filler card	the FC end of the SC-FC patch cord to the RX port of the OCLD filler card.
LC filler card	the LC end of the SC-LC patch cord to the RX port of the LC filler card.

21 Connect the SC end of the SC-FC (or SC-LC) patch cord to the BAND # ADD port of the OMX 4CH CWDM.

22

If you are connecting to an	**Then** connect
OCLD filler card	the FC end of the SC-FC patch cord to the TX port of the OCLD filler card.
LC filler card	the LC end of the SC-LC patch cord to the TX port of the LC filler card.

23 Repeat step 18 through step 22 for other OCLD filler cards or LC filler cards, if necessary.

Connecting OMX 1CH OADM ITU CWDM, OMX 4CH ITU CWDM, OMX 4CH OADM ITU CWDM or OMX 8CH ITU CWDM to an LC filler card

24 Refer to the following table to determine the connections you must make.

OMX 1CH OADM ITU CWDM OMX 4CH ITU CWDM or OMX 4CH OADM ITU CWDM OMX 8CH ITU CWDM port label	LC filler card port label
<Wavelength nm> ADD	TX
<Wavelength nm> DROP	RX

—continued—

Procedure 3-22 (continued)
Connecting an OMX to OCLD filler cards or LC filler cards

Step	Action
25	Connect the SC end of the SC-LC patch cord to the <Wavelength nm> DROP port of the ITU CWDM OMX.
26	Connect the LC end of the SC-LC patch cord to the RX port of the LC filler card.
27	Connect the SC end of the SC-LC patch cord to the <Wavelength nm> ADD port of the ITU CWDM OMX.
28	Connect the LC end of the SC-LC patch cord to the TX port of the LC filler card.
29	Repeat step 24 through step 28 for other LC filler cards, if necessary.

—end—

Procedure 3-23
Connecting unused OMX pigtails to OCLD filler cards

Follow this procedure to connect unused OMX (Standard) pigtails to OCLD filler cards. You connect the pigtails from the OMX (Standard) tray to the filler cards to manage the unused fiber-optic connections. Making these connections protects the fiber-optic pigtails from damage.

Requirements

Table 3-72 lists the tools and materials required to complete the procedure.

Table 3-72
Required tools and materials

Item	Quantity	Supplied
Antistatic wrist and heel straps	1	no
Fiber-optic cleaning kit	1	no
Fiber inspection scope	1	no

Pigtails from the west OMX (Standard) module connect to the filler cards in slots 1 through 4. Pigtails from the east OMX module connect to the filler cards in slots 15 through 18. See Table 3-73.

Table 3-73
OMX (Standard) pigtails to slot number assignments

OMX (Standard) pigtail	OMX module	Shelf Slot number
Band # Ch 1	West	1
Band # Ch 2	West	2
Band # Ch 3	West	3
Band # Ch 4	West	4
Band # Ch 1	East	18
Band # Ch 2	East	17
Band # Ch 3	East	16
Band # Ch 4	East	15

—continued—

Procedure 3-23 (continued)
Connecting unused OMX pigtails to OCLD filler cards

OMX pigtail lengths correspond to the OCLD slot they connect to. Make sure that to attach the pigtails to the filler card in the corresponding slot. If you incorrectly connect the pigtails, some of the pigtails may not reach the filler cards. Figure 3-19 on page 3-160 shows the OMX pigtails connected to filler cards.

If you do not have unused OMX (Standard) pigtails, use blank filler cards.

Precautions

DANGER
Invisible laser radiation
The Optical Metro 5100/5200 operates up to a Hazard Level of k x 3A (IEC 60825-2:2000) or 1M (IEC 60825-2:2004). Use only viewing instruments with proper optical attenuation.

CAUTION
Risk of affecting network reliability
Make sure that all connectors are cleaned before you make the connections (or re-connections) described in this procedure. For cleaning information, see the chapter "Cleaning connectors", in *Installing Optical Metro 5200 Shelves and Components*, 323-1701-201.

CAUTION
Possible risk of damage to equipment and fiber
Make sure that the bulkhead connectors are lowered and snapped into place before you close the drawers. Failure to do so can cause damage to the connector unit, the fibers attached to the connector unit, or both.

Observe the minimum bend radius of 1.18 inches (30 mm) for the patch cords. Always use the fiber management components in the drawer to route the fiber.

Allow for sufficient slack in the fibers that enter and exit the drawers. If sufficient slack is not left, the fibers can become stretched and damaged when the drawer is opened.

—continued—

Procedure 3-23 (continued)
Connecting unused OMX pigtails to OCLD filler cards

Action

Step	Action
1	Identify the pigtails that come from each side of the OMX tray that do not have corresponding OCLD circuit packs. *The boots on the connectors of the pigtails are color coded: Add pigtails are red and Drop pigtails are black. There is also a label attached to each pigtail to indicate its channel number (1 through 4) and its function (Add or Drop).*
2	Connect the black Drop pigtail into the RX port and the red Add pigtail into the TX port of the corresponding filler card. *Pigtails from the west OMX module connect to the filler cards installed on the left side of the shelf. Pigtails from the east OMX module connect to the right side of the shelf. See Table 3-73 on page 3-158 and Figure 3-19 on page 3-160.*
3	Repeat step 2 until you connect all the unused pigtails to filler cards on each side of the OMX tray.

—end—

Figure 3-19
Connecting unused OMX pigtails to OCLD filler cards

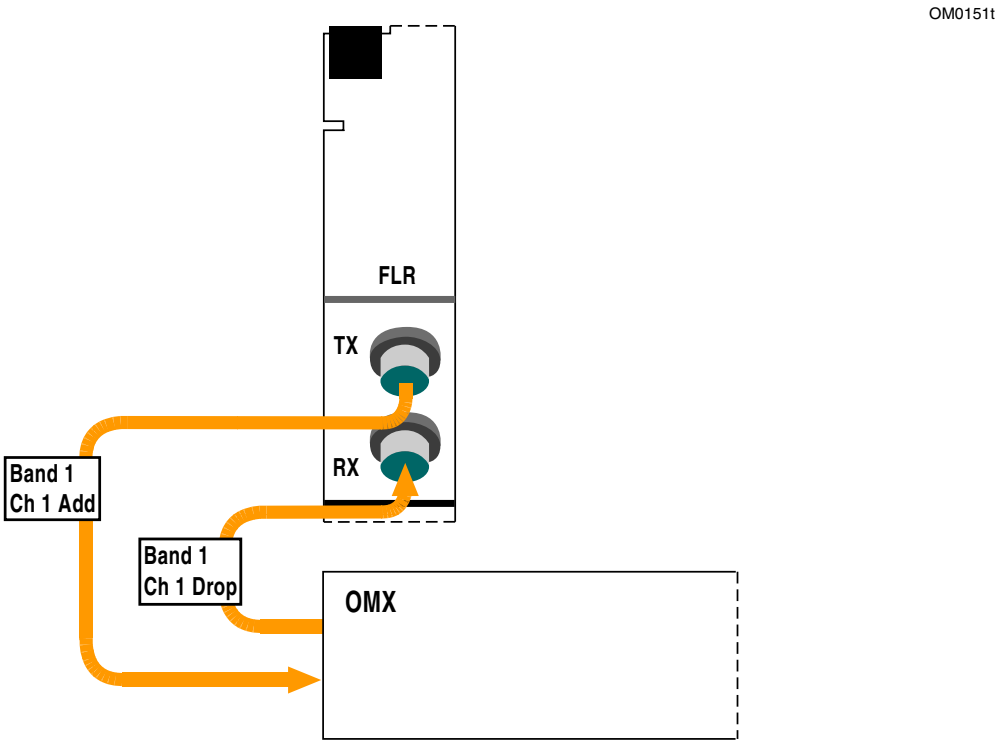

Procedure 3-24
Connecting OTR circuit packs to subtending equipment

Follow this procedure to connect OTR circuit packs to the subtending equipment.

To connect OTR circuit packs to subtending equipment through a Transponder Protection Tray, refer to procedure Procedure 3-25 "Connecting OTR circuit packs to subtending equipment through a Transponder Protection Tray" on page 3-167.

Requirements

Before you begin this procedure make sure

- all connectors are clean. For information on cleaning, see "Cleaning connectors" in *Installing Optical Metro 5200 Shelves and Components*, 323-1701-201.
- the speed of operation of the subtending equipment is within the maximum bit rate supported by the connected OTR circuit pack. See Table 2-30 " Specifications for OTR circuit packs—client side" in *Technical Specifications*, 323-1701-180.
- your network planning group has provided you with information regarding attenuator requirements to allow the subtending equipment and the OTR to interwork properly. See Table 2-30 " Specifications for OTR circuit packs—client side" in *Technical Specifications*, 323-1701-180.

—continued—

Procedure 3-24 (continued)
Connecting OTR circuit packs to subtending equipment

Table 3-74 lists the tools and materials you require to connect the OTRs to the subtending equipment.

Table 3-74
Required tools and materials

Item	Quantity	Supplied
Antistatic strap	1	no
Optical fiber cleaning kit	1	no
Fiber inspection scope	1	no
LC to SC Optical patch cords	2 for each OTR	no
Optical power meter (OPM) with an LC Fiber-Optic Adapter	1	no
Optical power meter (OPM) with an a Fiber-Optic Adapter that matches the connector type used on the subtending equipment	1	no
Attenuators	as determined by network planning group (attenuator value also provided by network planning group)	no

—continued—

Procedure 3-24 (continued)
Connecting OTR circuit packs to subtending equipment

Precautions

DANGER
Invisible laser radiation
The Optical Metro 5100/5200 operates up to a Hazard Level of k x 3A (IEC 60825-2:2000) or 1M (IEC 60825-2:2004). Use only viewing instruments with proper optical attenuation.

CAUTION
Risk of affecting network reliability
Make sure that all connectors are cleaned before you make the connections (or re-connections) described in this procedure. For cleaning information, see the chapter "Cleaning connectors", in *Installing Optical Metro 5200 Shelves and Components*, 323-1701-201.

CAUTION
Risk of equipment damage
If optical power exceeds the maximum input power (Rx) of the OTR circuit pack, damage to the OTR can result.

CAUTION
Possible risk of damage to equipment and fiber
Make sure that the bulkhead connectors are lowered and snapped into place before you close the drawers. Failure to do so can cause damage to the connector unit, the fibers attached to the connector unit, or both.

Observe the minimum bend radius of 1.18 inches (30 mm) for the patch cords. Always use the fiber management components in the drawer to route the fiber.

Allow for sufficient slack in the fibers that enter and exit the drawers. If sufficient slack is not left, the fibers can become stretched and damaged when the drawer is opened.

—continued—

Procedure 3-24 (continued)
Connecting OTR circuit packs to subtending equipment

Action

Step	Action

1 Refer to the following table to determine the connections you must make.

From OTR	To subtending equipment
CLIENT RX	TX
CLIENT TX	RX

2 Using a patch cord that you know is error free, measure the Tx signal strength of the subtending equipment that you want to connect to the CLIENT Rx port of the OTR, as shown in Figure 3-20 on page 3-166.

3 Make sure that the signal strength is within the Tx specifications of the subtending equipment.

Note: If the signal strength is not within the Tx specifications, clean the optical connectors or replace the subtending equipment circuit pack. For information on cleaning, see "Cleaning connectors" in *Installing Optical Metro 5200 Shelves and Components*, 323-1701-201.

4 Connect the patch cord that you will use to interconnect the Tx signal of the subtending equipment to the CLIENT Rx port of the OTR to the Tx port of the subtending equipment.

5 Measure and record the strength of the Tx signal at the end of the patch cord that will connect to the CLIENT Rx port of the OTR.

6

If the CLIENT Rx port on the OTR	**Then** go to
requires attenuation	step 7
does not require attenuation	step 9

7 Clean the attenuator and connect it to the end of the optical patch cord that will connect to the CLIENT Rx port of the OTR.

Note: If you do not have an LC attenuator, you can choose to add the attenuator at the Tx port of the subtending equipment.

8 Measure the signal strength to verify that the attenuator is working correctly.

9 Make sure that the signal strength is within the Rx specifications for the type of OTR that you are using. See Table 2-30 " Specifications for OTR circuit packs—client side" in *Technical Specifications*, 323-1701-180.

Note: If the signal strength is not within the Rx specifications, clean the optical connectors or replace patch cords. If this does not help, call your next level of support. For information on cleaning, see "Cleaning connectors" in *Installing Optical Metro 5200 Shelves and Components*, 323-1701-201.

—continued—

Procedure 3-24 (continued)
Connecting OTR circuit packs to subtending equipment

Step	Action
10	Route the optical patch cord through the fiber management trough and the vertical fiber brackets to the subtending equipment. Connect the patch cord to the CLIENT Rx port of the OTR. ***Note:*** If the patch cord is duplex, connect the other LC-end of the patch cord to the CLIENT Tx port of the OTR.
11	If a channel assignment is not provisioned on the OTR, create a channel assignment. See Procedure 3-3 "Making or modifying channel assignments" in *Provisioning and Operating Procedures*, 323-1701-310.
12	Put the OTR client-side facility out-of-service. See Procedure 3-13 "Taking a circuit pack facility or SFP facility out-of-service" in *Provisioning and Operating Procedures*, 323-1701-310.
13	Set up a client-side facility loopback on the OTR. See Procedure 3-59 "Creating and modifying a loopback using the System Manager", in *Provisioning and Operating Procedures*, 323-1701-310. Make sure that you select Facility for the type of loopback.
14	Using a patch cord that you know is error free, measure the Tx signal strength of the CLIENT Tx port of the OTR that you want to connect to the Rx port of the subtending equipment.
15	Make sure that the signal strength is within the Tx specifications for the type of OTR that you are using. See Table 2-30 " Specifications for OTR circuit packs—client side" in *Technical Specifications*, 323-1701-180. ***Note:*** If the signal strength is not within the Tx specifications, clean the optical connectors or replace the OTR circuit pack.For information on cleaning, see "Cleaning connectors" in *Installing Optical Metro 5200 Shelves and Components*, 323-1701-201.
16	Connect the patch cord that you will use to interconnect the Tx signal of the CLIENT Tx port of the OTR to the Rx port of the subtending equipment to the CLIENT Tx port of the OTR. ***Note:*** If the patch cord is duplex, then you have already done this in step 10.
17	Measure and record the strength of the Tx signal at the end of the patch cord that will connect to the Rx port of the subtending equipment.
18	**If** the Rx port on the subtending equipment — **Then** go to requires attenuation — step 19 does not require attenuation — step 21
19	Clean the attenuator and connect it to the end of the optical patch cord that will connect to the Rx port of the subtending equipment.
20	Measure the signal strength to verify that the attenuator is working correctly.

—continued—

Procedure 3-24 (continued)
Connecting OTR circuit packs to subtending equipment

Step	Action
21	Make sure that the signal strength is within the Rx specifications of the subtending equipment. ***Note:*** If the signal strength is not within the Rx specifications, clean the optical connectors or replace patch cords. If this does not help, call your next level of support. For information on cleaning, see "Cleaning connectors" in *Installing Optical Metro 5200 Shelves and Components*, 323-1701-201.
22	Route the optical patch cord through the fiber management trough and the vertical fiber brackets to the subtending equipment. Connect the patch cord to the Rx port on the subtending equipment.
23	Clear the OTR client-side facility loopback. See Procedure 3-60 "Removing a loopback using the System Manager", in *Provisioning and Operating Procedures*, 323-1701-310.
24	If necessary, put the OTR client-side facility back in-service. See Procedure 3-10 "Putting a circuit pack or SFP facility in-service", in *Provisioning and Operating Procedures*, 323-1701-310.
25	If necessary, delete the channel assignment you provisioned in step 11. See Procedure 3-4 "Deleting channel assignments", in *Provisioning and Operating Procedures*, 323-1701-310.

—end—

Figure 3-20
Measuring signal strength of the subtending equipment

OM0174s

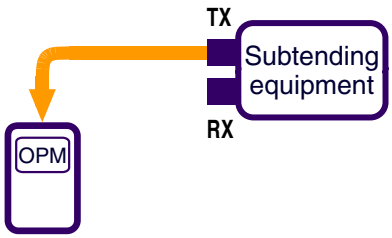

Procedure 3-25
Connecting OTR circuit packs to subtending equipment through a Transponder Protection Tray

Follow this procedure to connect two OTR circuit packs, forming a protection pair, to subtending equipment through a Transponder Protection Tray.

The OTRs support transponder protection. In transponder protection, a pair of OTRs cooperate to provide path and equipment protection while ensuring that only one OTR in the pair is transmitting to the tray at any time, while the other OTR is in standby status. Any OTRs in any west side slot can protect the same OTRs with the same band and channel in any east side slot. You can have a maximum of:

- four pairs of OTR 10 Gbit/s in a shelf in a protected Optical Metro 5200 network
- eight pairs of OTR 2.5 Gbit/s Flex in a shelf in a protected Optical Metro 5200 network

  Note: Two Transponder Protection Trays are required to provide protection for eight pairs of 2.5 Gbit/s Flex OTRs.

- two pairs of OTR 2.5 Gbit/s Flex in a shelf in a protected Optical Metro 5100 network

Requirements

Before you begin this procedure make sure

- all connectors are clean. For information on cleaning, see "Cleaning connectors" in *Installing Optical Metro 5200 Shelves and Components*, 323-1701-201.
- you are familiar with how to access connectors in a Transponder Protection Tray. See Procedure 1-13 "Accessing connectors in a Transponder Protection Tray" in part 1 of this document.
- the speed of operation of the subtending equipment is within the maximum bit rate supported by the connected OTR circuit pack. See Table 2-30 " Specifications for OTR circuit packs—client side" in *Technical Specifications*, 323-1701-180.
- your network planning group has provided you with information regarding attenuator requirements to allow the subtending equipment and the OTR to interwork properly. See Table 2-30 " Specifications for OTR circuit packs—client side" and Table 1-32 "Transponder Protection Tray specifications" in *Technical Specifications*, 323-1701-180.

—continued—

Procedure 3-25 (continued)
Connecting OTR circuit packs to subtending equipment through a Transponder Protection Tray

Table 3-75 lists the tools and materials you require to connect the OTRs to subtending equipment through a Transponder Protection Tray.

Table 3-75
Required tools and materials

Item	Quantity	Supplied
Antistatic strap	1	no
Optical fiber cleaning kit	1	no
Fiber inspection scope	1	no
LC to SC optical patch cords (see Note1)	2 for each OTR circuit pack	order from Nortel Networks
Optical patch cord with SC-SC connectors	1	no
Optical power meter (OPM) with an LC Fiber-Optic Adapter	1	no
Optical power meter (OPM) with an SC Fiber-Optic Adapter	1	no
Optical power meter (OPM) with an a Fiber-Optic Adapter which matches the connector type used on the subtending equipment	1	no
Attenuators	as determined by network planning group (attenuator value also provided by network planning group)	no

Note 1: Refer to "Fiber-optic patch cords" on page 13-97 in *Network Planning and Link Engineering*, 323-1701-110.

Note 2: You can use the Fiber Manager to route the extra slack of the patch cords when you use the four-channel Transponder Protection Trays (NT0H59AA or NT0H59BA). Refer to Procedure 8-3 "Guidelines for routing fiber in the Fiber Manager" in *Installing Optical Metro 5200 Shelves and Components*, 323-0701-201.

—continued—

Procedure 3-25 (continued)
Connecting OTR circuit packs to subtending equipment through a Transponder Protection Tray

Precautions

DANGER
Invisible laser radiation
The Optical Metro 5100/5200 operates up to a Hazard Level of k x 3A (IEC 60825-2:2000) or 1M (IEC 60825-2:2004). Use only viewing instruments with proper optical attenuation.

CAUTION
Risk of affecting network reliability
Make sure that all connectors are cleaned before you make the connections (or re-connections) described in this procedure. For cleaning information, see the chapter "Cleaning connectors", in *Installing Optical Metro 5200 Shelves and Components*, 323-1701-201.

CAUTION
Possible risk of damage to equipment and fiber
Make sure that the bulkhead connectors are lowered and snapped into place before you close the drawers. Failure to do so could cause damage to the connector unit, the fibers attached to the connector unit, or both.

Observe the minimum bend radius of 1.18 inches (30 mm) for the patch cords. Always use the fiber management components in the drawer to route the fiber.

Allow for sufficient slack in the fibers that enter and exit the drawers. If sufficient slack is not left, the fibers can become stretched and damaged when the drawer is opened.

ATTENTION
The Transponder Protection Tray has two sliding fiber management components located on the left and right sides of the tray. Each of these components has two tabs that lock into position across the top of the component, to hold the routed fibers in position.

To open the tab to route fiber, press the tab toward the back of the latch while lifting it. Press down on the tab to close it.

—continued—

Procedure 3-25 (continued)
Connecting OTR circuit packs to subtending equipment through a Transponder Protection Tray

Action

Step	Action

1 Refer to the following table to determine the connections you must make.

Subtending equipment port label	Transponder Protection Tray port label	Transponder Protection Tray port label	OTR (1) port label	OTR (2) port label
RX	CLIENT OUT	Fm CLIENT TX 1	CLIENT TX	-
TX	CLIENT IN	To CLIENT RX 1	CLIENT RX	-
		Fm CLIENT TX 2	-	CLIENT TX
		To CLIENT RX 2	-	CLIENT RX
Note: OTR (1) must be in the east (or west) plane of the shelf and OTR (2) must be in the west (or east) plane of the shelf.				

2 Open and fully extend the drawer of the Transponder Protection Tray.

3 Using a patch cord that you know is error free, measure the Tx signal strength of the subtending equipment that you want to connect to the Transponder Protection Tray port labeled “CLIENT IN”.

4 Make sure that the signal strength is within the Tx specifications of the subtending equipment.

Note: If the signal strength is not within the Tx specifications, clean the optical connectors or replace the subtending equipment circuit pack. For information on cleaning, see “Cleaning connectors” in *Installing Optical Metro 5200 Shelves and Components*, 323-1701-201.

5 Connect the patch cord that you will use to interconnect the Tx signal of the of the subtending equipment to the Transponder Protection Tray port labeled “CLIENT IN” to the Tx port of the subtending equipment.

6

If the CLIENT Rx ports of the OTRs	**Then** go to
require attenuation	step 7
do not require attenuation	step 9

7 Clean the attenuator and connect it to the patch cord that will connect to the Transponder Protection Tray port labeled “CLIENT IN”.

8 Measure the signal strength after the attenuator to verify that the attenuator is working correctly.

9 Connect the patch cord to the Transponder Protection Tray port labeled “CLIENT IN”.

—continued—

Procedure 3-25 (continued)
Connecting OTR circuit packs to subtending equipment through a Transponder Protection Tray

Step	Action
10	Route the patch cord through the fiber management components in the drawer. ***Note:*** The Transponder Protection Tray has two sliding fiber management components located on the left and right sides of the tray. Each of these components has two tabs that lock into position across the top of the dish to hold the routed fibers in position. To open the tab to route fiber through the dish, press the tab toward the back of the latch while you lift it. Press down on the tab to close it.
11	Use curly ties or Velcro straps to bundle the fibers where they enter the tray.
12	Connect the SC end of an LC-to-SC optical patch cord to the Transponder Protection Tray port labeled “To CLIENT RX 1”.
13	Measure the signal strength at the LC end of the LC-to-SC optical patch cord.
14	Make sure that the signal strength is within the Rx specifications for the type of OTR that you are using. See Table 2-30 “ Specifications for OTR circuit packs—client side” in *Technical Specifications*, 323-1701-180. ***Note:*** If the signal strength is not within the Rx specifications, clean the optical connectors or replace patch cords. If this does not help, call your next level of support. For information on cleaning, see “Cleaning connectors” in *Installing Optical Metro 5200 Shelves and Components*, 323-1701-201.
15	Route the LC-to-SC optical patch cord through the fiber management components of the tray.
16	Use curly ties or Velcro straps to bundle the fibers where they enter the tray.
17	Route the LC-to-SC optical patch cord through the vertical fiber brackets and the fiber management trough. Connect the LC end of the patch cord to the OTR (1) CLIENT RX port. ***Note:*** If the patch cord is duplex, connect the other LC end of the patch cord to the OTR (1) CLIENT TX port.
18	Connect the SC end of an LC-to-SC optical patch cord to the Transponder Protection Tray port labeled “To CLIENT RX 2”.
19	Measure the signal strength at the LC end of the LC-to-SC optical patch cord.

—continued—

Procedure 3-25 (continued)
Connecting OTR circuit packs to subtending equipment through a Transponder Protection Tray

Step	Action
20	Make sure that the signal strength is within the Rx specifications for the type of OTR that you are using. See Table 2-30 " Specifications for OTR circuit packs—client side" in *Technical Specifications*, 323-1701-180. ***Note:*** If the signal strength is not within the Rx specifications, clean the optical connectors or replace patch cords. If this does not help, call your next level of support. For information on cleaning, see "Cleaning connectors" in *Installing Optical Metro 5200 Shelves and Components*, 323-1701-201.
21	Route the LC-to-SC optical patch cord through the fiber management components of the tray.
22	Use curly ties or Velcro straps to bundle the fibers where they enter the tray.
23	Route the LC-to-SC optical patch cord through the vertical fiber brackets and the fiber management trough. Connect the LC end of the patch cord to the OTR (2) CLIENT RX port. ***Note:*** If the patch cord is duplex, connect the other LC end of the patch cord to the OTR (2) CLIENT TX port.
24	If a protected channel assignment is not provisioned on the OTRs, create a channel assignment. See Procedure 3-3 "Making or modifying channel assignments", in *Provisioning and Operating Procedures*, 323-1701-310.
25	Put the OTR (1) client-side port facility out-of-service. See Procedure 3-13 "Taking a circuit pack facility or SFP facility out-of-service" in *Provisioning and Operating Procedures*, 323-1701-310.
26	Set up a facility loopback on the OTR (1) client-side port. See Procedure 3-59 "Creating and modifying a loopback using the System Manager", in *Provisioning and Operating Procedures*, 323-1701-310. Make sure that you select Facility for the type of loopback.
27	Put the OTR (2) client-side port facility out-of-service. See Procedure 3-13 "Taking a circuit pack facility or SFP facility out-of-service" in *Provisioning and Operating Procedures*, 323-1701-310.
28	Set up a facility loopback on the OTR (2) client-side port. See Procedure 3-59 "Creating and modifying a loopback using the System Manager", in *Provisioning and Operating Procedures*, 323-1701-310. Make sure that you select Facility for the type of loopback.
29	Unseat the OTR (2) circuit pack.

—continued—

Procedure 3-25 (continued)
Connecting OTR circuit packs to subtending equipment through a Transponder Protection Tray

Step	Action
30	Connect the LC end of an LC-to-SC optical patch cord to the OTR (1) CLIENT TX port. ***Note:*** If the patch cord is duplex, then you have already done this in step 17.
31	Measure the signal strength at the SC end of the LC-to-SC optical patch cord.
32	Make sure that the signal strength is within the Tx specifications for the type of OTR that you are using. See Table 2-30 " Specifications for OTR circuit packs—client side" in *Technical Specifications*, 323-1701-180. ***Note:*** If the signal strength is not within the Tx specifications, clean the optical connectors or replace the OTR circuit pack. For information on cleaning, see "Cleaning connectors" in *Installing Optical Metro 5200 Shelves and Components*, 323-1701-201.
33	Route the LC-to-SC optical patch cord through the fiber management trough and the vertical fiber brackets.
34	Route the LC-to-SC optical patch cord through the fiber management components of the tray. Connect the SC end of the patch cord to the Transponder Protection Tray port labeled "Fm CLIENT TX 1".
35	Use curly ties or Velcro straps to bundle the fibers where they enter the tray.
36	**If** the CLIENT Tx ports on the OTRs — **Then** go to require attenuation — step 37 do not require attenuation — step 39
37	Clean the attenuator and connect it to the Transponder Protection Tray port labeled "CLIENT OUT".
38	Measure the signal strength after the attenuator to verify that the attenuator is working correctly.
39	Connect a patch cord that you will use to interconnect the Transponder Protection Tray port labeled "CLIENT OUT" to the subtending equipment Rx port to the Transponder Protection Tray port labeled "CLIENT OUT".
40	Route the patch cord through the fiber management components in the drawer.

—continued—

Procedure 3-25 (continued)
Connecting OTR circuit packs to subtending equipment through a Transponder Protection Tray

Step	Action
41	Use curly ties or Velcro straps to bundle the fibers where they enter the tray.
42	Measure and record the strength of the Tx signal at the end of the patch cord that will connect to the Rx port of the subtending equipment.
43	Make sure that the signal strength is within the Rx specifications of the subtending equipment. ***Note:*** If the signal strength is not within the Rx specifications, clean the optical connectors or replace patch cords. If this does not help, call your next level of support. For information on cleaning, see "Cleaning connectors" in *Installing Optical Metro 5200 Shelves and Components*, 323-1701-201.
44	Seat the OTR (2) circuit pack.
45	Wait for the Status LED on the OTR (2) circuit pack faceplate to turn ON.
46	Unseat the OTR (1) circuit pack.
47	Connect the LC end of an LC-to-SC optical patch cord to the OTR (2) CLIENT TX port. ***Note:*** If the patch cord is duplex, then you have already done this in step 23.
48	Measure the signal strength at the SC end of the LC-to-SC optical patch cord.
49	Make sure that the signal strength is within the Tx specifications for the type of OTR that you are using. See Table 2-30 " Specifications for OTR circuit packs—client side" in *Technical Specifications*, 323-1701-180. ***Note:*** If the signal strength is not within the Tx specifications, clean the optical connectors or replace the OTR circuit pack. For information on cleaning, see "Cleaning connectors" in *Installing Optical Metro 5200 Shelves and Components*, 323-1701-201.
50	Route the LC-to-SC optical patch cord through the fiber management trough and the vertical fiber brackets.
51	Route the LC-to-SC optical patch cord through the fiber management components of the tray. Connect the SC end of the patch cord to the Transponder Protection Tray port labeled "Fm CLIENT TX 2".
52	Use curly ties or Velcro straps to bundle the fibers where they enter the tray.
53	Measure and record the strength of the Tx signal at the end of the patch cord that will connect to the Rx port of the subtending equipment.

—continued—

Procedure 3-25 (continued)
Connecting OTR circuit packs to subtending equipment through a Transponder Protection Tray

Step	Action
54	Make sure that the signal strength is within the Rx specifications of the subtending equipment. ***Note:*** If the signal strength is not within the Rx specifications, clean the optical connectors or replace patch cords. If this does not help, call your next level of support. For information on cleaning, see "Cleaning connectors" in *Installing Optical Metro 5200 Shelves and Components*, 323-1701-201.
55	Seat the OTR (1) circuit pack.
56	Wait for the Status LED on the OTR (1) circuit pack faceplate to turn ON.
57	Clear the OTR (1) client-side port facility loopback. See Procedure 3-60 "Removing a loopback using the System Manager", in *Provisioning and Operating Procedures*, 323-1701-310.
58	If necessary, put the OTR (1) client-side port facility back in-service. See Procedure 3-10 "Putting a circuit pack or SFP facility in-service", in *Provisioning and Operating Procedures*, 323-1701-310.
59	Clear the OTR (2) client-side port facility loopback. See Procedure 3-60 "Removing a loopback using the System Manager", in *Provisioning and Operating Procedures*, 323-1701-310.
60	If necessary, put the OTR (2) client-side port facility back in-service. See Procedure 3-10 "Putting a circuit pack or SFP facility in-service", in *Provisioning and Operating Procedures*, 323-1701-310.
61	If necessary, delete the channel assignment you provisioned in step 24. See Procedure 3-4 "Deleting channel assignments", in *Provisioning and Operating Procedures*, 323-1701-310.
62	Close the Transponder Protection Tray drawer.

—end—

Procedure 3-26
Connecting OTR 10 Gbit/s circuit packs for pass-through connections through a patch panel

Follow this procedure to connect a pair of OTR 10 Gbit/s circuit packs with the same band and channel back-to-back for a pass-through connection through a patch panel.

The NT0H43CA and NT0H43CB patch panels provide the following functions:

- provides a method to secure the SC-type attenuator
- provides fiber management for excess fiber

Requirements

Before you begin this procedure make sure

- all connectors are clean. For information on cleaning, see "Cleaning connectors" in *Installing Optical Metro 5200 Shelves and Components*, 323-1701-201.
- you are familiar with how to access connectors in an NT0H43CA or NT0H43CB patch panel. See Procedure 1-16, "Accessing connectors in a patch panel" in part 1 of this document.

—continued—

Procedure 3-26 (continued)
Connecting OTR 10 Gbit/s circuit packs for pass-through connections through a patch panel

Table 3-76 lists the tools and materials you require to connect a pair of OTR 10 Gbit/s circuit packs.

Table 3-76
Required tools and materials

Item	Quantity	Supplied
Antistatic wrist and heel straps	1	no
Fiber-optic cleaning kit	1	no
Fiber inspection scope	1	no
Optical power meter (OPM) with an SC fiber-optic adapter	1	no
Optical power meter (OPM) with an LC fiber-optic adapter	1	no
LC-SC optical patch cord (see Note)	4	order from Nortel Networks
10 dB attenuator	2	no
10 Gbit/s SONET or SDH test set	1	no
Note: Refer to "Fiber-optic patch cords" on page 13-97 in *Network Planning and Link Engineering*, 323-1701-110.		

—continued—

Procedure 3-26 (continued)
Connecting OTR 10 Gbit/s circuit packs for pass-through connections through a patch panel

Precautions

DANGER
Invisible laser radiation
The Optical Metro 5100/5200 operates up to a Hazard Level of k x 3A (IEC 60825-2:2000) or 1M (IEC 60825-2:2004). Use only viewing instruments with proper optical attenuation.

CAUTION
Risk of affecting network reliability
You must clean the fiber connectors before you make connections to ensure network reliability. For cleaning information, see the chapter "Cleaning connectors", in *Installing Optical Metro 5200 Shelves and Components*, 323-1701-201.

CAUTION
Possible risk of damage to equipment and fiber
Make sure that the bulkhead connectors are lowered and snapped into place before you close the drawers. Failure to do so can cause damage to the connector unit, the fibers attached to the connector unit, or both.

Observe the minimum bend radius of 1.18 inches (30 mm) for the patch cords. Always use the fiber management components in the drawer to route the fiber.

Allow for sufficient slack in the fibers that enter and exit the drawers. If sufficient slack is not left, the fibers can become stretched and damaged when the drawer is opened.

—continued—

Procedure 3-26 (continued)
Connecting OTR 10 Gbit/s circuit packs for pass-through connections through a patch panel

Action

Step	Action

1 Refer to the following table to determine the connections you must make.

From OTR (1) port label	To Patch Panel port label	To OTR (2) port label	To Patch Panel port label
CLIENT RX	NORTEL To RX	CLIENT TX	CPE Fm TX
CLIENT TX	NORTEL Fm TX	CLIENT RX	CPE To RX
Note: OTR (1) is equipped in slots 1 to 8 and OTR (2) is equipped in slots 11-18.			

2 If an unprotected channel assignment is not provisioned on OTR (1), create an unprotected channel assignment. See Procedure 3-3 "Making or modifying channel assignments" in *Provisioning and Operating Procedures*, 323-1701-310.

3 Put OTR (1) client-side facility out-of-service. See Procedure 3-13 "Taking a circuit pack facility or SFP facility out-of-service" in *Provisioning and Operating Procedures*, 323-1701-310.

4 Set up a client-side facility loopback on OTR (1). See Procedure 3-59 "Creating and modifying a loopback using the System Manager" in *Provisioning and Operating Procedures*, 323-1701-310. Make sure that you select Facility for the type of loopback.

5 Repeat step step 2 to step 4 for OTR (2).

6 Using an Optical Power Meter (OPM) set to the wavelength of the test set transmitter, measure the output power from the 10 Gbit/s SONET or SDH test set transmitter. Ensure that the power measured is within the 10 Gbit/s OTR client-side RX power specifications. See Table 2-30 " Specifications for OTR circuit packs—client side"in *Technical Specifications*, 323-1701-180. You may need to add an attenuator to ensure this.

7 Connect the SC-end of the first LC-SC optical patch cord to the 10 Gbit/s test set transmitter.

8 Using the OPM set to the wavelength of the test set transmitter, measure the power at the LC-end of the first LC-SC optical patch cord. It should not be more than 1 dB less than the power output by the test set.

9 Connect the LC-end of the first LC-SC optical patch cord to CLIENT RX port of OTR (1).

10 Connect the LC-end of the second LC-SC optical patch cord to CLIENT TX port of OTR (1).

—continued—

Procedure 3-26 (continued)
Connecting OTR 10 Gbit/s circuit packs for pass-through connections through a patch panel

Step	Action
11	Using the OPM set to 1310 nm, measure the power at the SC-end of the second LC-SC optical patch cord. Ensure that the power measured is within the 10 Gbit/s OTR client-side TX power specifications. See Table 2-30 " Specifications for OTR circuit packs—client side" in *Technical Specifications*, 323-1701-180.
12	**If** / **Then** go to the power measured is within the OTR 10 Gbit/s client-side TX power specifications — step 14 otherwise — step 13
13	Replace the optical patch cord. If this does not help, replace the 10 Gbit/s OTR (1) circuit pack.
14	Connect a 10 dB attenuator pad to the SC-end of the second LC-SC optical patch cord and measure the power after the attenuator to verify that the attenuator is working properly.
15	Repeat step 14 to verify that the second 10 dB attenuator is working properly.
16	Open and fully extend the drawer of the NT0H43CA or NT0H43CB patch panel.
17	Connect the SC-end (with a 10 dB attenuator installed) of the first LC-SC optical patch cord to an available patch panel port labeled NORTEL To RX routing the patch cord through the patch panel as shown in Figure 3-21 on page 3-182 if you are using the NT0H43CA patch panel or Figure 3-23 on page 3-183 if you are using the NT0H43CB patch panel.
18	Connect the SC-end (with a 10 dB attenuator installed) of the second LC-SC optical patch cord to the patch panel port labeled NORTEL Fm TX (the port number must be the same as the one selected in step 17) routing the patch cord through the patch panel as shown in Figure 3-21 on page 3-182 if you are using the NT0H43CA patch panel or Figure 3-23 on page 3-183 if you are using the NT0H43CB patch panel.
19	Connect the SC-end of the third LC-SC optical patch cord to the 10 Gbit/s test set transmitter.
20	Using the OPM set to the wavelength of the test set transmitter, measure the power at the LC-end of the third LC-SC optical patch cord. It should not be more than 1 dB less than the power output by the test set.
21	Connect the LC-end of the third LC-SC optical patch cord to CLIENT RX port of OTR (2).
22	Connect the LC-end of the fourth LC-SC optical patch cord to CLIENT TX port of OTR (2).

—continued—

Procedure 3-26 (continued)
Connecting OTR 10 Gbit/s circuit packs for pass-through connections through a patch panel

Step	Action
23	Using the OPM set to 1310 nm, measure the power at the SC-end of the fourth LC-SC optical patch cord. Ensure that the power measured is within the 10 Gbit/s OTR client-side TX power specifications. See Table 2-30 in *Technical Specifications*, 323-1701-180.
24	**If** / **Then** go to the power measured is within the OTR 10 Gbit/s client-side TX power specifications — step 26 otherwise — step 25
25	Replace the optical patch cord. If this does not help, replace the OTR 10 Gbit/s (2) circuit pack.
26	Connect the SC end of the fourth LC-SC optical patch cord to the panel port labeled CPE Fm TX (the port number must be the same as the one selected in step 17) routing the patch cord through the patch panel as shown in Figure 3-22 on page 3-182 if you are using the NT0H43CA patch panel or Figure 3-24 on page 3-183 if you are using the NT0H43CB patch panel.
27	Connect the SC end of the third LC-SC optical patch cord to the patch panel port labeled CPE To RX (the port number must be the same as the one selected in step 17) routing the patch cord through the patch panel as shown in Figure 3-22 on page 3-182 if you are using the NT0H43CA patch panel or Figure 3-24 on page 3-183 if you are using the NT0H43CB patch panel. ***Note:*** It is normal that the client-side LOS faceplate LED is lit on the 10 Gbit/s OTR circuit packs. Do not take any action. This can occur as a result of the following conditions: • the line-side LOS faceplate LED is lit on the OTR 10 Gbit/s circuit packs • there are no channel assignments provisioned at the upstream or downstream OTR Gbit/s circuit packs • there is an active fault condition at the upstream or downstream OTR 10 Gbit/s circuit packs
28	Clear the OTR (1) client-side facility loopback. See Procedure 3-60 “Removing a loopback using the System Manager” in *Provisioning and Operating Procedures*, 323-1701-310.
29	If necessary, put the OTR (1) client-side facility back in-service. See Procedure 3-10 “Putting a circuit pack or SFP facility in-service” in *Provisioning and Operating Procedures*, 323-1701-310.
30	If necessary, delete the unprotected channel assignment provisioned against OTR (1). See Procedure 3-4 “Deleting channel assignments” in *Provisioning and Operating Procedures*, 323-1701-310.
31	Repeat step step 28 to step 30 for OTR (2).
32	Close the patch panel drawer.

—end—

Figure 3-21
Routing patch cords from OTR 10 Gbit/s circuit pack in slots 1 - 8, (NT0H43CA patch panel)

om2101p

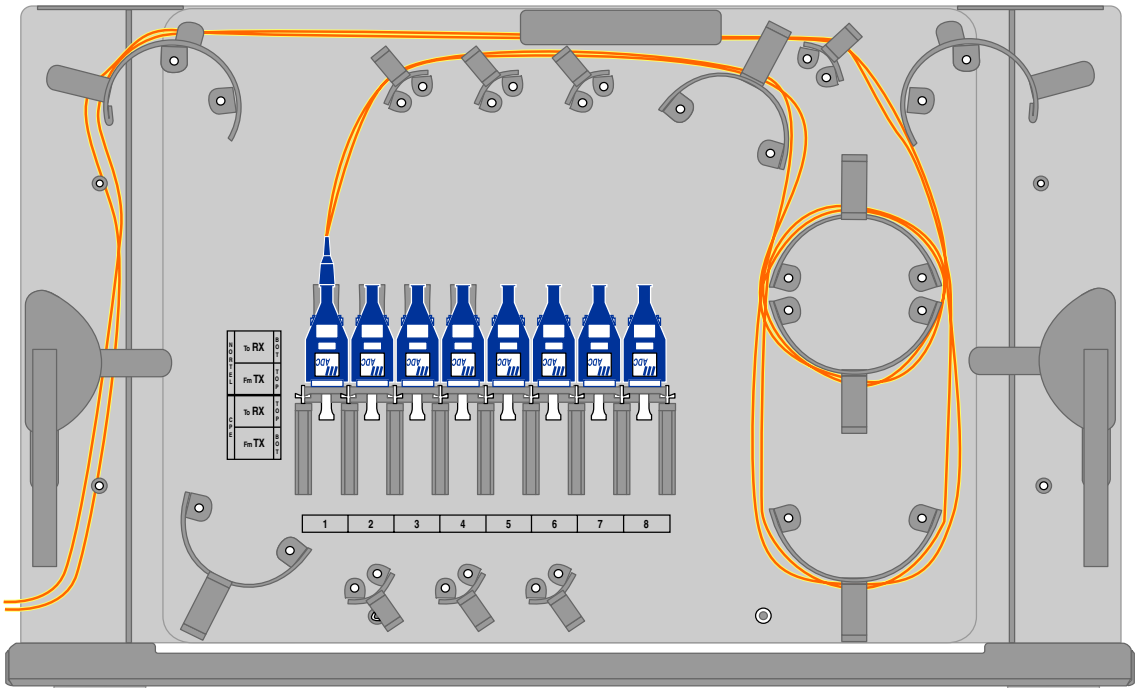

Figure 3-22
Routing patch cords from OTR 10 Gbit/s circuit packs (NT0H43CA patch panel)

OM2102p

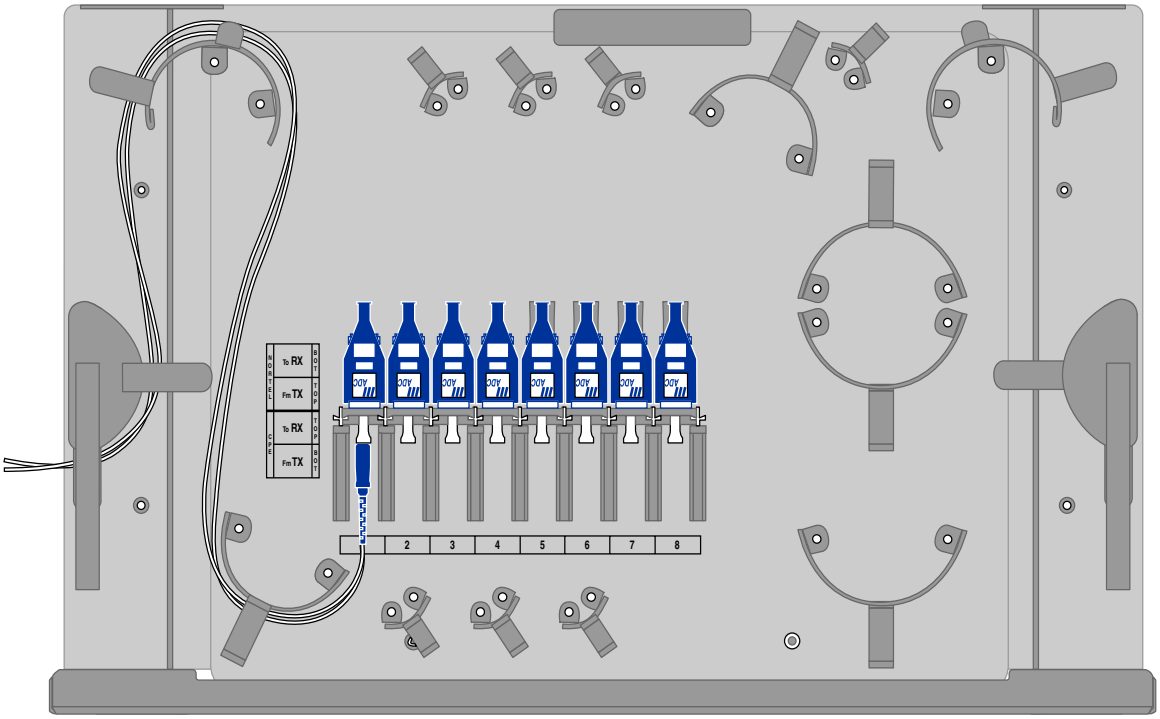

Figure 3-23
Routing patch cords from OTR 10 Gbit/s circuit pack in slots 1 - 10, (NT0H43CB patch panel)

om2800

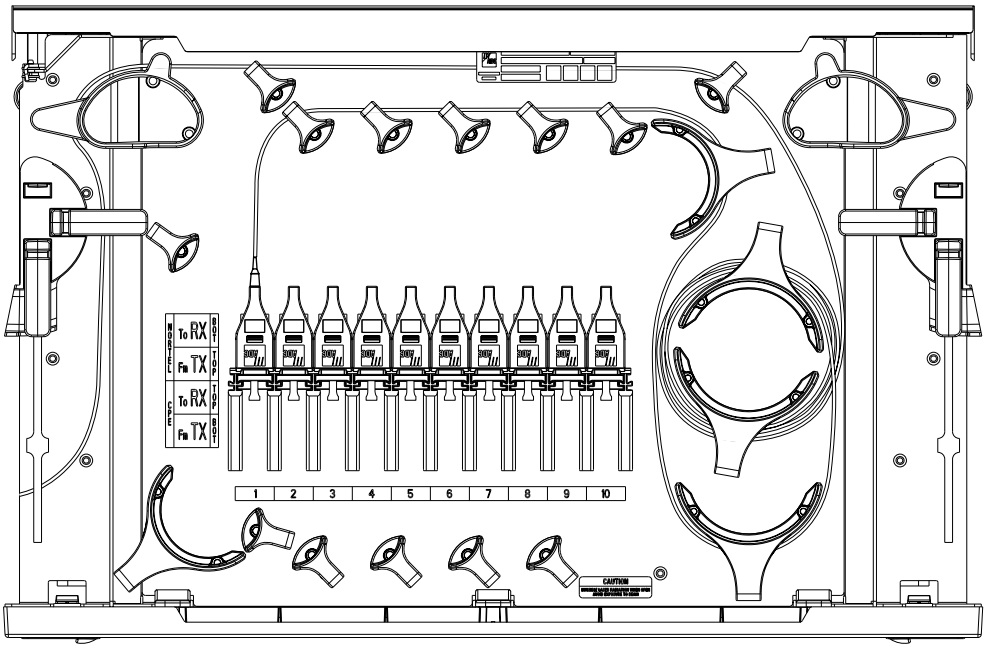

Figure 3-24
Routing patch cords from OTR 10 Gbit/s circuit packs (NT0H43CB patch panel)

om2801

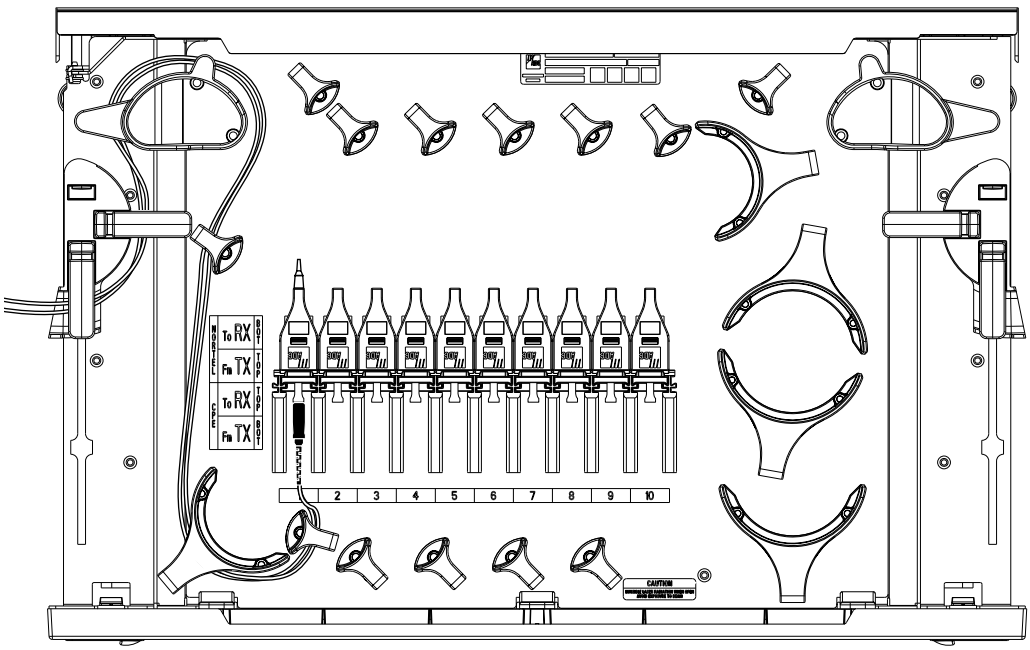

Procedure 3-27
Connecting OTR 10 Gbit/s Enhanced circuit packs for pass-through connections through a patch panel

Follow this procedure to connect a pair of OTR 10 Gbit/s Enhanced circuit packs with the same band and channel back-to-back for a pass-through connection through a patch panel.

The NT0H43CA and NT0H43CAB patch panels provide the following functions:

- provides a method to secure the SC-type attenuator
- provides fiber management for excess fiber

Requirements

Before you begin this procedure make sure

- all connectors are clean. For information on cleaning, see "Cleaning connectors" in *Installing Optical Metro 5200 Shelves and Components*, 323-1701-201.
- you are familiar with how to access connectors in an NT0H43CA or NT0H43CB patch panel. See Procedure 1-16, "Accessing connectors in a patch panel" in part 1 of this document.

Table 3-77 lists the tools and materials you require to connect a pair of OTR 10 Gbit/s Enhanced circuit packs.

Table 3-77
Required tools and materials

Item	Quantity	Supplied
Antistatic wrist and heel straps	1	no
Fiber-optic cleaning kit	1	no
Fiber inspection scope	1	no
Optical power meter with an SC fiber-optic adapter	1	no
Optical power meter with an LC fiber-optic adapter	1	no
LC-SC optical patch cord (see Note)	4	order from Nortel Networks
10 dB attenuator	2	no
Note: Refer to "Fiber-optic patch cords" on page 13-97 in *Network Planning and Link Engineering*, 323-1701-110.		

—continued—

Procedure 3-27 (continued)
Connecting OTR 10 Gbit/s Enhanced circuit packs for pass-through connections through a patch panel

Precautions

DANGER
Invisible laser radiation
The Optical Metro 5100/5200 operates up to a Hazard Level of k x 3A (IEC 60825-2:2000) or 1M (IEC 60825-2:2004). Use only viewing instruments with proper optical attenuation.

CAUTION
Risk of affecting network reliability
You must clean the fiber connectors before you make connections to ensure network reliability. For cleaning information, see the chapter "Cleaning connectors", in *Installing Optical Metro 5200 Shelves and Components*, 323-1701-201.

CAUTION
Possible risk of damage to equipment and fiber
Make sure that the bulkhead connectors are lowered and snapped into place before you close the drawers. Failure to do so can cause damage to the connector unit, the fibers attached to the connector unit, or both.

Observe the minimum bend radius of 1.18 inches (30 mm) for the patch cords. Always use the fiber management components in the drawer to route the fiber.

Allow for sufficient slack in the fibers that enter and exit the drawers. If sufficient slack is not left, the fibers can become stretched and damaged when the drawer is opened.

—continued—

Procedure 3-27 (continued)
Connecting OTR 10 Gbit/s Enhanced circuit packs for pass-through connections through a patch panel

Action

Step	Action

1 Refer to the following table to determine the connections you must make.

From OTR (1) port label	To Patch Panel port label	To OTR (2) port label	To Patch Panel port label
CLIENT RX	NORTEL To RX	CLIENT TX	CPE Fm TX
CLIENT TX	NORTEL Fm TX	CLIENT RX	CPE To RX
Note: OTR (1) is equipped in slots 1 to 8 and OTR (2) is equipped in slots 11-18.			

2 If an unprotected channel assignment is not provisioned on OTR (1), create an unprotected channel assignment. See Procedure 3-3 "Making or modifying channel assignments" in *Provisioning and Operating Procedures*, 323-1701-310.

Note: For this procedure, you must provision one of the following protocols for the unprotected channel assignment:

— OC-192
— STM-64
— 10G Ethernet WAN

This procedure will not work if you provision the 10G Clear Channel or 10G Ethernet LAN protocols. Once this procedure is completed, the channel assignment protocol can be changed to these protocols if required.

3 Repeat step 2 for OTR (2).

4 Connect the LC-end of the first LC-SC optical patch cord to CLIENT TX port of OTR (1).

5 Using the OPM set to 1310 nm, measure the power at the SC-end of the first LC-SC optical patch cord. Ensure that the power measured is within the OTR 10 Gbit/s Enhanced client-side TX power specifications. See Table 2-31 " Specifications for OTR circuit packs—client side" in *Technical Specifications*, 323-1701-180.

6

If	**Then** go to
the power measured is within the OTR 10 Gbit/s Enhanced client-side TX power specifications	step 8
otherwise	step 7

—continued—

Procedure 3-27 (continued)
Connecting OTR 10 Gbit/s Enhanced circuit packs for pass-through connections through a patch panel

Step	Action
7	Replace the optical patch cord. If this does not help, replace the OTR (1) circuit pack. Then go to step 4.
8	Note the power reading. This value will be used to verify the 10 dB attenuators and the other optical patch cords.
9	Connect a 10 dB attenuator pad to the SC-end of the first LC-SC optical patch cord and measure the power after the attenuator to verify that the attenuator is working properly.
10	Repeat step 9 to verify that the second 10 dB attenuator is working properly.
11	Disconnect the 10 dB attenuator and put both 10 dB attenuators on the side for now, they will be connected later.
12	Disconnect the LC-end of the first LC-SC optical patch cord from the CLIENT TX port of OTR (1) and connect it to the CLIENT TX port of OTR (2).
13	Using the OPM set to 1310 nm, measure the power at the SC-end of the first LC-SC optical patch cord. Ensure that the power measured is within the OTR 10 Gbit/s Enhanced client-side TX power specifications. See Table 2-30 in *Technical Specifications*, 323-1701-180.
14	**If** / **Then** go to the power measured is within the OTR 10 Gbit/s Enhanced client-side TX power specifications — step 16 otherwise — step 15
15	Replace the OTR (2) circuit pack and then go to step 13.
16	Disconnect the LC-end of the first LC-SC optical patch cord from the CLIENT TX port of OTR (2). Put this optical patch cord on the side for now, it will be connected later.
17	Connect the LC-end of the second LC-SC optical patch cord to CLIENT TX port of OTR (1).
18	Using the OPM set to 1310 nm, measure the power at the SC-end of the second LC-SC optical patch cord. Ensure that the power measured is within 1 dB of the power noted in step 8. If not, replace the optical patch cord and then go to the step 17.
19	Disconnect the LC-end of the second LC-SC optical patch cord from the CLIENT TX port of OTR (1). Put this optical patch cord on the side for now, it will be connected later.
20	Repeat step 17 to step 19 for the other 2 optical patch cords.
21	Open and fully extend the drawer of the NT0H43CA or NT0H43CB patch panel.

—continued—

Procedure 3-27 (continued)
Connecting OTR 10 Gbit/s Enhanced circuit packs for pass-through connections through a patch panel

Step	Action
22	Connect the LC-end of the first LC-SC optical patch cord to CLIENT RX port of OTR(1).
23	Connect the SC-end (with a 10 dB attenuator installed) of the first LC-SC optical patch cord to an available patch panel port labeled NORTEL To RX routing the patch cord through the patch panel as shown in Figure 3-25 on page 3-189 if you are using the NT0H43CA patch panel or Figure 3-27 on page 3-190 if you are using the NT0H43CB patch panel.
24	Connect the LC-end of the second LC-SC optical patch cord to CLIENT TX port of OTR(1).
25	Connect the SC-end (with a 10 dB attenuator installed) of the second LC-SC optical patch cord to the patch panel port labeled NORTEL Fm TX (the port number must be the same as the one selected in step 23) routing the patch cord through the patch panel as shown in Figure 3-25 on page 3-189 if you are using the NT0H43CA patch panel or Figure 3-27 on page 3-190 if you are using the NT0H43CB patch panel.
26	Connect the LC-end of the third LC-SC optical patch cord to CLIENT RX port of OTR(2).
27	Connect the SC-end of the third LC-SC optical patch cord to the patch panel port labeled CPE To RX (the port number must be the same as the one selected in step 23) routing the patch cord through the patch panel as shown in Figure 3-26 on page 3-189 if you are using the NT0H43CA patch panel or Figure 3-28 on page 3-190 if you are using the NT0H43CB patch panel.
28	Connect the LC-end of the fourth LC-SC optical patch cord to CLIENT TX port of OTR(2).
29	Connect the SC-end of the fourth LC-SC optical patch cord to the panel port labeled CPE Fm TX (the port number must be the same as the one selected in step 23) routing the patch cord through the patch panel as shown in Figure 3-26 on page 3-189 if you are using the NT0H43CA patch panel or Figure 3-28 on page 3-190 if you are using the NT0H43CB patch panel.
30	The client-side LOS faceplate lamp on the OTR 10 Gbit/s Enhanced circuit packs must be off. The Alarm Indication Signal alarm can be active against the client-side interfaces. This is normal.
31	If necessary, delete the unprotected channel assignment provisioned against OTR (1) and OTR (2). See Procedure 3-4 “Deleting channel assignments” in *Provisioning and Operating Procedures*, 323-1701-310.
32	Close the patch panel drawer.

—end—

Figure 3-25
Routing patch cords from OTR 10 Gbit/s Enhanced circuit pack in slots 1 - 8, (NT0H43CA)

OM2101p

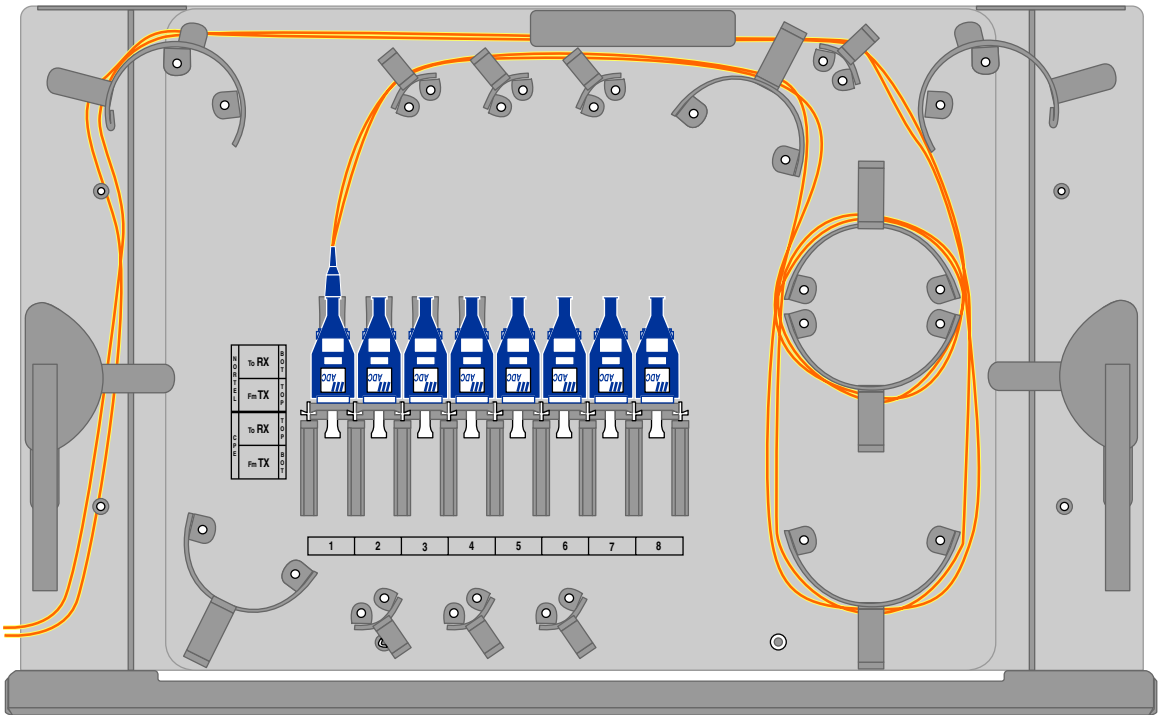

Figure 3-26
Routing patch cords from OTR 10 Gbit/s Enhanced circuit pack (NT0H43CA)

OM2102p

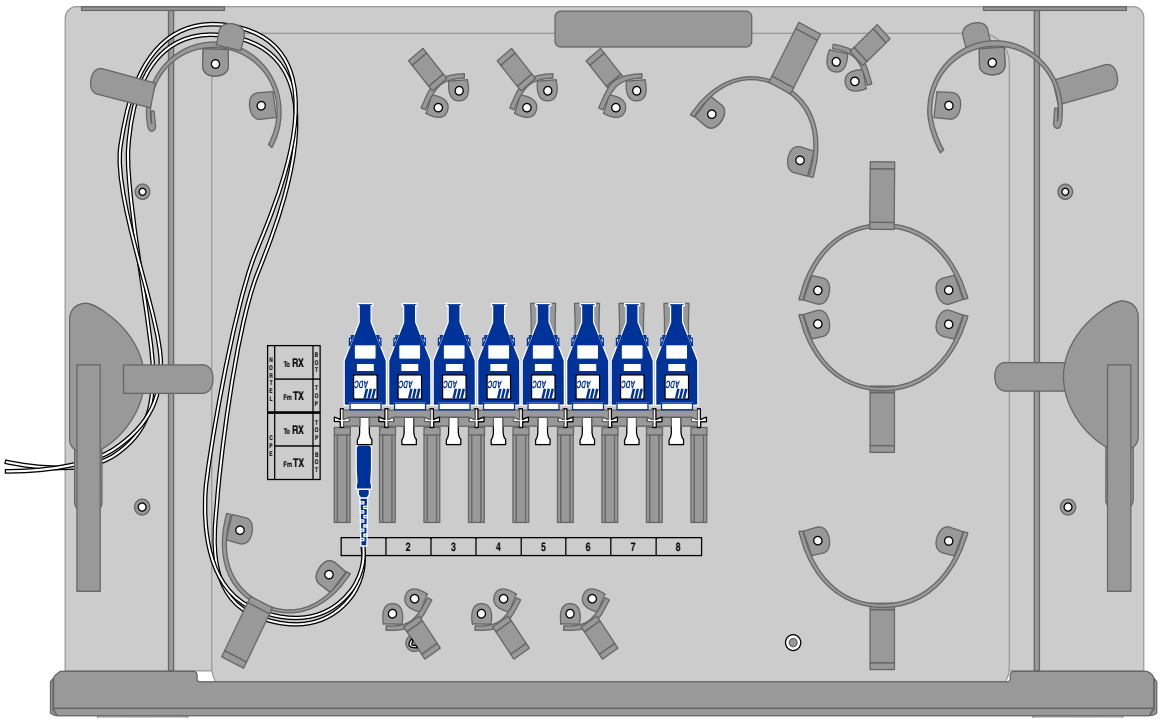

Figure 3-27
Routing patch cords from OTR 10 Gbit/s Enhanced circuit pack in slots 1 - 8, (NT0H43CB)

om2800

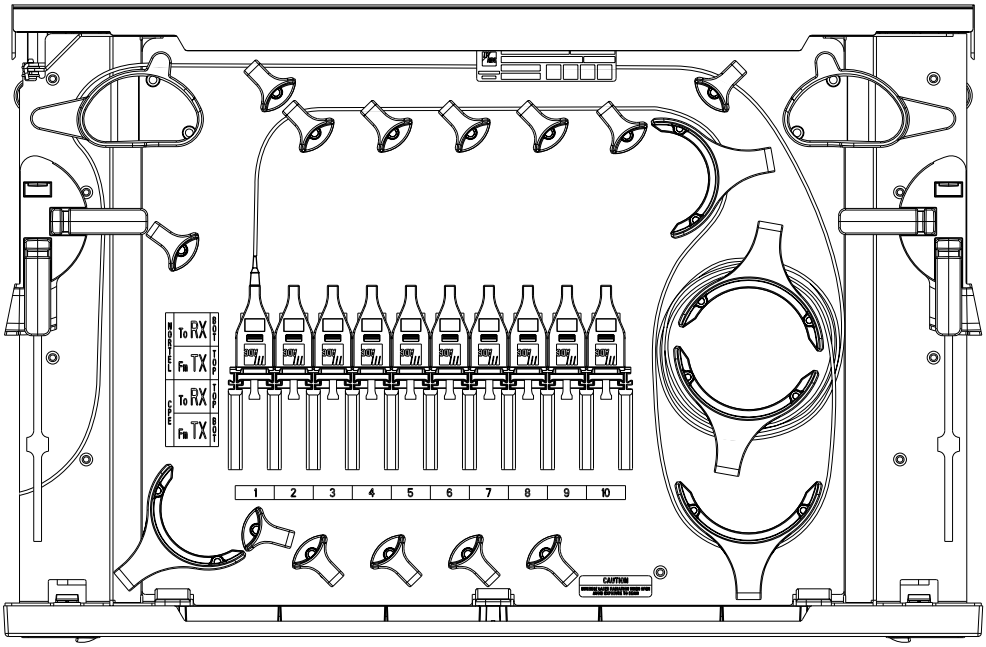

Figure 3-28
Routing patch cords from OTR 10 Gbit/s Enhanced circuit pack (NT0H43CB)

om2801

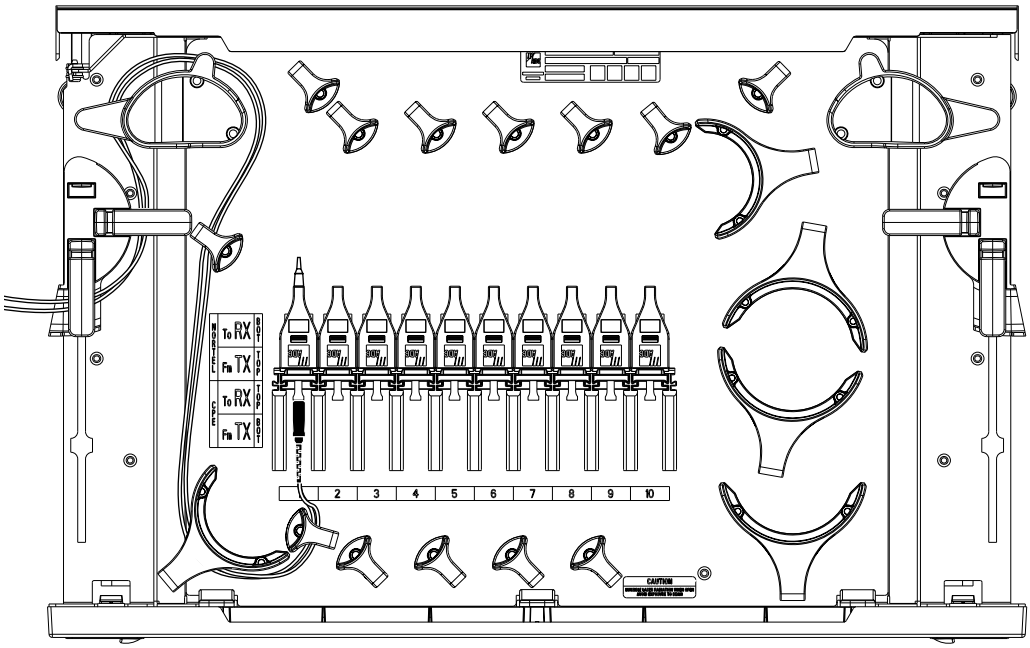

Procedure 3-28
Connecting OCI circuit packs to subtending equipment

Follow this procedure to connect OCI circuit packs to the subtending equipment, except for the following circuit packs:

- OCI SRM
- OCI SRM SONET/SDH LTE
- OCI SRM GbE/F
- OCI SRM GbE
- OCI SRM ESCON

To connect OCI SRM, or OCI SRM SONET/SDH, or OCI SRM SONET/SDH LTE circuit packs to subtending equipment, follow Procedure 3-29 "Connecting OCI SRM circuit packs to subtending equipment through a patch panel" on page 3-197.

To connect OCI SRM ESCON circuit packs to subtending equipment, follow Procedure 3-30"Connecting OCI SRM ESCON circuit packs to subtending equipment through a patch panel" on page 3-206.

To connect OCI SRM GbE/FC or OCI SRM GbE circuit packs to subtending equipment, follow Procedure 3-31 "Connecting OCI SRM GbE/FC or OCI SRM GbE circuit packs to subtending equipment" on page 3-217.

Requirements

Before you begin this procedure make sure

- all connectors are clean. For information on cleaning, see "Cleaning connectors" in *Installing Optical Metro 5200 Shelves and Components*, 323-1701-201.
- the speed of operation of the subtending equipment is within the maximum bit rate supported by the connected OCI circuit pack. See Table 2-1 " Specifications for OCI circuit packs" in *Technical Specifications*, 323-1701-180.
- your network planning group has provided you with information regarding attenuator requirements to allow the subtending equipment and the OCI to interwork properly. See Table 2-1 " Specifications for OCI circuit packs" in *Technical Specifications*, 323-1701-180.

—continued—

Procedure 3-28 (continued)
Connecting OCI circuit packs to subtending equipment

Note: Attenuators cannot be connected to the OCI SRM 1310 nm LC circuit pack ports. This type of connection prevents the installation of the shelf cover. The attenuators can be connected to the subtending equipment ports. If connecting the attenuators to the subtending equipment is not possible, then a patch panel is needed. If a patch panel is needed to hold the attenuators, follow Procedure 3-29, "Connecting OCI SRM circuit packs to subtending equipment through a patch panel".

Table 3-78 lists the tools and materials you require to connect the OCIs to the subtending equipment.

Table 3-78
Required tools and materials

Item	Quantity	Supplied
Antistatic strap	1	no
Fiber-optic cleaning kit	1	no
Fiber inspection scope	1	no
Optical patch cords	2 for each OCI	no
Optical power meter (OPM) with an FC Fiber-Optic Adapter if OCI uses FC connectors	1	no
Optical power meter (OPM) with an SC Fiber-Optic Adapter if OCI uses SC connectors	1	no
Optical power meter (OPM) with an a Fiber-Optic Adapter that matches the connector type used on the subtending equipment	1	no
Attenuators	as determined by network planning group (attenuator value also provided by network planning group)	no

—continued—

Procedure 3-28 (continued)
Connecting OCI circuit packs to subtending equipment

Precautions

DANGER
Invisible laser radiation
The Optical Metro 5100/5200 operates up to a Hazard Level of k x 3A (IEC 60825-2:2000) or 1M (IEC 60825-2:2004). Use only viewing instruments with proper optical attenuation.

CAUTION
Risk of affecting network reliability
Make sure that all connectors are cleaned before you make the connections (or re-connections) described in this procedure. For cleaning information, see the chapter "Cleaning connectors", in *Installing Optical Metro 5200 Shelves and Components*, 323-1701-201.

CAUTION
Possible risk of damage to equipment and fiber
Make sure that the bulkhead connectors are lowered and snapped into place before you close the drawers. Failure to do so can cause damage to the connector unit, the fibers attached to the connector unit, or both.

Observe the minimum bend radius of 1.18 inches (30 mm) for the patch cords. Always use the fiber management components in the drawer to route the fiber.

Allow for sufficient slack in the fibers that enter and exit the drawers. If sufficient slack is not left, the fibers can become stretched and damaged when the drawer is opened.

—continued—

Procedure 3-28 (continued)
Connecting OCI circuit packs to subtending equipment

Action

Step	Action

1 Refer to the following table to determine the connections you must make.

From OCI	To subtending equipment
RX	TX
TX	RX

2 Using a patch cord that you know is error free, measure the Tx signal strength of the subtending equipment that you want to connect to the Rx port of the OCI, as shown in Figure 3-29 on page 3-196.

3 Make sure that the signal strength is within the Tx specifications of the subtending equipment.

Note: If the signal strength is not within the Tx specifications, clean the optical connectors or replace the subtending equipment circuit pack. For information on cleaning, see "Cleaning connectors" in *Installing Optical Metro 5200 Shelves and Components*, 323-1701-201.

4 Connect the patch cord that will be used to interconnect the Tx signal of the subtending equipment to the Rx port of the OCI to the Tx port of the subtending equipment.

5 Measure and record the strength of the Tx signal at the end of the patch cord that will connect to the Rx port of the OCI.

6

If the Rx port on the OCI	**Then** go to
requires attenuation	step 7
does not require attenuation	step 9

7 Clean the attenuator and connect it to the end of the optical patch cord that will connect to the Rx port of the OCI.

8 Measure the signal strength to verify that the attenuator is working correctly.

—continued—

Procedure 3-28 (continued)
Connecting OCI circuit packs to subtending equipment

Step	Action
9	Make sure that the signal strength is within the Rx specifications for the type of OCI that you are using. See Table 2-1 in *Technical Specifications,* 323-1701-180 for OCI circuit pack specifications. ***Note:*** If the signal strength is not within the Rx specifications, clean the optical connectors or replace patch cords. If this does not help, call your next level of support. For information on cleaning, see "Cleaning connectors" in *Installing Optical Metro 5200 Shelves and Components*, 323-1701-201.
10	Route the optical patch cord through the fiber management trough and the vertical fiber brackets to the subtending equipment. Connect the patch cord to the Rx port on the faceplate of the OCI.
11	If a channel assignment is not provisioned between the OCI and an OCLD, create a channel assignment between the OCI and an OCLD. See Procedure 3-3 "Making or modifying channel assignments" in *Provisioning and Operating Procedures*, 323-1701-310.
12	Put the OCI facility out-of-service. See Procedure 3-13 "Taking a circuit pack facility or SFP facility out-of-service" in *Provisioning and Operating Procedures*, 323-1701-310.
13	Set up a facility loopback on the OCI. See Procedure 3-59 "Creating and modifying a loopback using the System Manager", in *Provisioning and Operating Procedures*, 323-1701-310. Make sure that you select Facility for the type of loopback.
14	Using a patch cord that you know is error free, measure the Tx signal strength of the OCI that you want to connect to the Rx port of the subtending equipment.
15	Make sure that the signal strength is within the Tx specifications for the type of OCI that you are using. See Table 2-1 in *Technical Specifications,* 323-1701-180 for OCI circuit pack specifications. ***Note:*** If the signal strength is not within the Tx specifications, clean the optical connectors or replace the OCI circuit pack. For information on cleaning, see "Cleaning connectors" in *Installing Optical Metro 5200 Shelves and Components*, 323-1701-201.
16	Connect the patch cord that you will use to interconnect the Tx signal of the OCI to the Rx port of the subtending equipment to the Tx port of the OCI.
17	Measure and record the strength of the Tx signal at the end of the patch cord that will connect to the Rx port of the subtending equipment.

—continued—

Procedure 3-28 (continued)
Connecting OCI circuit packs to subtending equipment

Step	Action	
18	**If** the Rx port on the subtending equipment	**Then** go to
	requires attenuation	step 19
	does not require attenuation	step 21

19 Clean the attenuator and connect it to the end of the optical patch cord that will connect to the Rx port of the subtending equipment.

20 Measure the signal strength to verify that the attenuator is working correctly.

21 Make sure that the signal strength is within the Rx specifications of the subtending equipment.

Note: If the signal strength is not within the Rx specifications, clean the optical connectors or replace the patch cords. If this does not help, call your next level of support. For information on cleaning, see "Cleaning connectors" in *Installing Optical Metro 5200 Shelves and Components*, 323-1701-201.

22 Route the optical patch cord through the fiber management trough and the vertical fiber brackets to the subtending equipment. Connect the patch cord to the Rx port on the subtending equipment.

23 Clear the OCI facility loopback. See Procedure 3-60 "Removing a loopback using the System Manager", in *Provisioning and Operating Procedures*, 323-1701-310.

24 If necessary, put the OCI facility back in-service. See Procedure 3-10 "Putting a circuit pack or SFP facility in-service", in *Provisioning and Operating Procedures*, 323-1701-310.

25 If necessary, delete the channel assignment provisioned in step 11. See Procedure 3-4 "Deleting channel assignments", in *Provisioning and Operating Procedures*, 323-1701-310.

—end—

Figure 3-29
Measuring signal strength of the subtending equipment

OM0174s

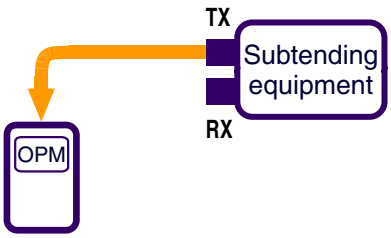

Procedure 3-29
Connecting OCI SRM circuit packs to subtending equipment through a patch panel

Follow this procedure to connect an OCI SRM, or OCI SRM SONET/SDH, or OCI SRM SONET/SDH LTE circuit pack to subtending equipment through an NT0H43CA or NT0H43CB patch panel.

Requirements

Before you begin this procedure make sure

- all connectors are clean. For information on cleaning, see "Cleaning connectors" in *Installing Optical Metro 5200 Shelves and Components*, 323-1701-201.
- you are familiar with how to access connectors in an NT0H43CA or NT0H43CB patch panel. See Procedure 1-16, "Accessing connectors in a patch panel" in part 1 of this document.
- the required number of patch panels (one NT0H43CA or NT0H43CB for every two OCI SRM or OCI SRM SONET/SDH circuit packs in a shelf) are correctly installed in the equipment rack or cabinet.
- the speed of operation of the subtending equipment is within the maximum bit rate supported by the connected OCI SRM circuit pack. See Table 2-2 " Specifications for OCI SRM circuit packs" in *Technical Specifications*, 323-1701-180.
- your network planning group has provided you with information regarding attenuator requirements to allow the subtending equipment and the OCI SRM to interwork properly. See Table 2-2 in *Technical Specifications*, 323-1701-180 for OCI SRM circuit pack specifications.

—continued—

Procedure 3-29 (continued)
Connecting OCI SRM circuit packs to subtending equipment through a patch panel

Table 3-79 lists the tools and materials you require to connect the OCI SRM circuit packs to subtending equipment.

Table 3-79
Required tools and materials

Item	Quantity	Supplied
Antistatic strap	1	no
Optical fiber cleaning kit	1	no
Fiber inspection scope	1	no
MT-RJ to SC optical patch cords (see Note)	1 for each OCI SRM port	no
Optical patch cord with SC-SC connectors	1	no
Optical power meter (OPM) with an MT-RJ Fiber-Optic Adapter	1	no
Optical power meter (OPM) with an SC Fiber-Optic Adapter	1	no
Optical power meter (OPM) with an a Fiber-Optic Adapter that matches the connector type used on the subtending equipment	1	no
Attenuators	as determined by network planning group (attenuator value also provided by network planning group)	no
Note: Refer to "Fiber-optic patch cords" on page 13-97 in *Network Planning and Link Engineering*, 323-1701-110.		

—continued—

Procedure 3-29 (continued)
Connecting OCI SRM circuit packs to subtending equipment through a patch panel

Precautions

DANGER
Invisible laser radiation
The Optical Metro 5100/5200 operates up to a Hazard Level of k x 3A (IEC 60825-2:2000) or 1M (IEC 60825-2:2004). Use only viewing instruments with proper optical attenuation.

CAUTION
Risk of affecting network reliability
Make sure that all connectors are cleaned before you make the connections (or re-connections) described in this procedure. For cleaning information, see the chapter "Cleaning connectors", in *Installing Optical Metro 5200 Shelves and Components*, 323-1701-201.

ATTENTION
If you use an OCI SRM SONET/SDH circuit pack, you must make sure that the four OC-12/STM-4 source signals come from a single SONET/SDH transport product that you can configure for either BITS synchronization or line timing. You cannot connect the OC-12/STM-4 signals to an OCI SRM SONET/SDH from a source that cannot function as a SONET/SDH transport product.

The four OC-12/STM-4 source traffic signals that you must connect to the OCI SRM SONET/SDH must be frequency synchronous to a single internal clock source.

—continued—

Procedure 3-29 (continued)
Connecting OCI SRM circuit packs to subtending equipment through a patch panel

CAUTION
Possible risk of damage to equipment and fiber
Make sure that the bulkhead connectors are lowered and snapped into place before you close the drawers. Failure to do so can cause damage to the connector unit, the fibers attached to the connector unit, or both.

Observe the minimum bend radius of 1.18 inches (30 mm) for the patch cords. Always use the fiber management components in the drawer to route the fiber.

Allow for sufficient slack in the fibers that enter and exit the drawers. If sufficient slack is not left, the fibers can become stretched and damaged when the drawer is opened.

Action

Step	Action

1 Refer to the following table to determine the connections you must make.

Subtending equipment port label	Patch panel port label	Patch panel port label	OCI SRM port
RX	CPE To RX	NORTEL Fm TX	TX (see Note)
TX	CPE Fm TX	NORTEL To RX	RX (see Note)
Note: The TX and RX signals are on the same MT-RJ connector on the OCI SRM faceplate. The MT-RJ connectors on the OCI SRM faceplate are labeled 1, 2, 3 and 4.			

2 Open and fully extend the drawer of the NT0H43CA or NT0H43CB patch panel.

3 Using a patch cord that you know is error free, measure the Tx signal strength of the subtending equipment that you want to connect to the patch panel port labeled “CPE Fm TX”, as shown in Figure 3-30 on page 3-203.

4 Make sure that the signal strength is within the Tx specifications of the subtending equipment.

Note: If the signal strength is not within the Tx specifications, clean the optical connectors or replace the subtending equipment circuit pack. For information on cleaning, see “Cleaning connectors” in *Installing Optical Metro 5200 Shelves and Components*, 323-1701-201.

—continued—

Procedure 3-29 (continued)
Connecting OCI SRM circuit packs to subtending equipment through a patch panel

Step	Action
5	Connect the patch cord that you will use to interconnect the Tx signal of the subtending equipment to the patch panel port labeled “CPE Fm TX” to the Tx port of the subtending equipment.
6	Connect the other end of the patch cord to the patch panel port labeled “CPE Fm TX” routing the patch cord through the patch panel as shown in Figure 3-34 on page 3-205.
7	**If** the Rx port on the OCI SRM / **Then** go to requires attenuation — step 8 does not require attenuation — step 10
8	Clean the attenuator and connect it to the patch panel port labeled “NORTEL To RX”.
9	Using a SC-SC patch cord that you know is error free, measure the signal strength after the attenuator to verify that the attenuator is working correctly.
10	Connect the orange-end of the MT-RJ to SC optical patch cord to the patch panel port labeled “NORTEL To RX”. ***Note:*** See Figure 3-31 on page 3-203 for a view of the MT-RJ to SC optical patch cord.
11	Measure the signal strength at the MT-RJ end of the MT-RJ to SC optical patch cord.
12	Make sure that the signal strength is within the Rx specifications for the type of OCI SRM that you are using. See Table 2-2 in *Technical Specifications*, 323-1701-180 for OCI SRM circuit pack specifications. ***Note:*** If the signal strength is not within the Rx specifications, clean the optical connectors or replace patch cords. If this does not help, call your next level of support. For information on cleaning, see “Cleaning connectors” in *Installing Optical Metro 5200 Shelves and Components*, 323-1701-201.
13	Route the MT-RJ to SC optical patch cord through the fiber management trough and the vertical fiber brackets to the patch panel. Connect the patch cord to the OCI SRM port.
14	Route the MT-RJ to SC optical patch cord through the patch panel as shown in Figure 3-32 on page 3-204 (for patch cords from OCI SRMs located in slots 10-18) and Figure 3-33 on page 3-204 (for patch cords from OCI SRMs located in slots 1-8).
15	If a channel assignment is not provisioned between the OCI SRM port and an OCLD, create a channel assignment between the OCI SRM port and an OCLD. See Procedure 3-3 “Making or modifying channel assignments”, in *Provisioning and Operating Procedures*, 323-1701-310.

—continued—

Procedure 3-29 (continued)
Connecting OCI SRM circuit packs to subtending equipment through a patch panel

Step	Action
16	Put the OCI SRM port facility out-of-service. See Procedure 3-13 "Taking a circuit pack facility or SFP facility out-of-service" in *Provisioning and Operating Procedures*, 323-1701-310.
17	Set up a facility loopback on the OCI SRM port. See Procedure 3-59 "Creating and modifying a loopback using the System Manager", in *Provisioning and Operating Procedures*, 323-1701-310. Make sure that you select Facility for the type of loopback.
18	Measure the signal strength at the blue-end of the MT-RJ to SC optical patch cord.
19	Make sure that the signal strength is within the Tx specifications for the type of OCI SRM that you are using. See Table 2-2 " Specifications for OCI SRM circuit packs" in *Technical Specifications*, 323-1701-180. ***Note:*** If the signal strength is not within the Tx specifications, clean the optical connectors or replace the OCI SRM circuit pack. For information on cleaning, see "Cleaning connectors" in *Installing Optical Metro 5200 Shelves and Components*, 323-1701-201.
20	**If** the Tx port on the OCI SRM — **Then** go to requires attenuation — step 21 does not require attenuation — step 23
21	Clean the attenuator and connect it to the blue-end of the MT-RJ to SC optical patch cord.
22	Measure the signal strength after the attenuator to verify that the attenuator is working correctly.
23	Connect the blue-end of the MT-RJ to SC optical patch cord to the patch panel port labeled "NORTEL Fm TX".
24	Connect a patch cord that you will use to interconnect the patch panel port labeled "CPE To RX" to the subtending equipment Rx port to the patch panel port labeled "CPE To RX" and route as shown in Figure 3-34 on page 3-205.
25	Measure and record the strength of the Tx signal at the end of the patch cord that will connect to the Rx port of the subtending equipment.

—continued—

Procedure 3-29 (continued)
Connecting OCI SRM circuit packs to subtending equipment through a patch panel

Step	Action
26	Make sure that the signal strength is within the Rx specifications of the subtending equipment. ***Note:*** If the signal strength is not within the Rx specifications, clean the optical connectors or replace patch cords. If this does not help, call your next level of support. For information on cleaning, see "Cleaning connectors" in *Installing Optical Metro 5200 Shelves and Components*, 323-1701-201.
27	Connect the patch cord to the Rx port of the subtending equipment.
28	Clear the OCI SRM port facility loopback. See Procedure 3-60 "Removing a loopback using the System Manager", in *Provisioning and Operating Procedures*, 323-1701-310.
29	If necessary, put the OCI SRM port facility back in-service. See Procedure 3-10 "Putting a circuit pack or SFP facility in-service", in *Provisioning and Operating Procedures*, 323-1701-310.
30	If necessary, delete the channel assignment provisioned in step 15. See Procedure 3-4 "Deleting channel assignments", in *Provisioning and Operating Procedures*, 323-1701-310.
31	If necessary, repeat step 3 through step 30 for other OCI SRM ports.
32	Close the patch panel drawer.

—end—

Figure 3-30
Measuring signal strength of the subtending equipment

OM0174s

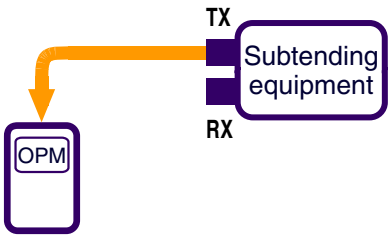

Figure 3-31
OCI SRM (MT-RJ to SC) patch cord (for OCI SRM or OCI SRM SONET/SDH circuit packs)

OM0276p

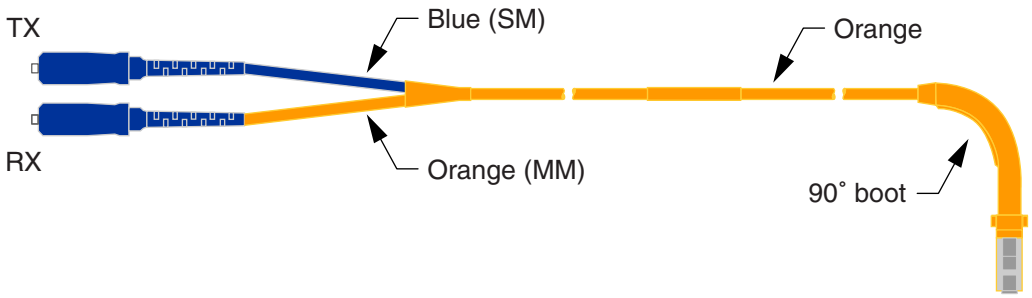

Figure 3-32
Routing OCI SRM (MT-RJ to SC) patch cords from OCI SRM circuit packs in slots 10 - 18, (NT0H43CA example)

OM0249p

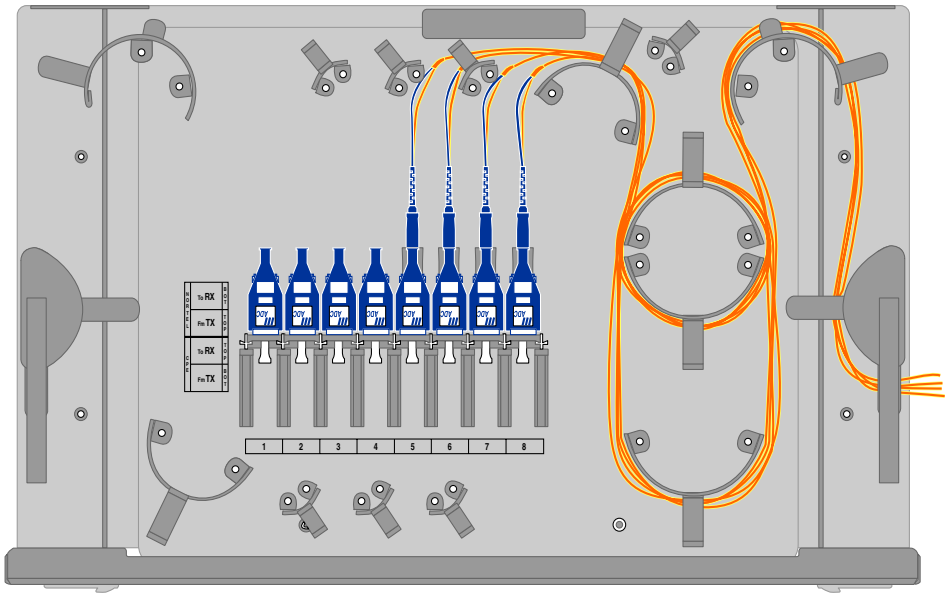

Figure 3-33
Routing OCI SRM (MT-RJ to SC) patch cords from OCI SRM circuit packs in slots 1 - 8, (NT0H43CA example)

OM0260p

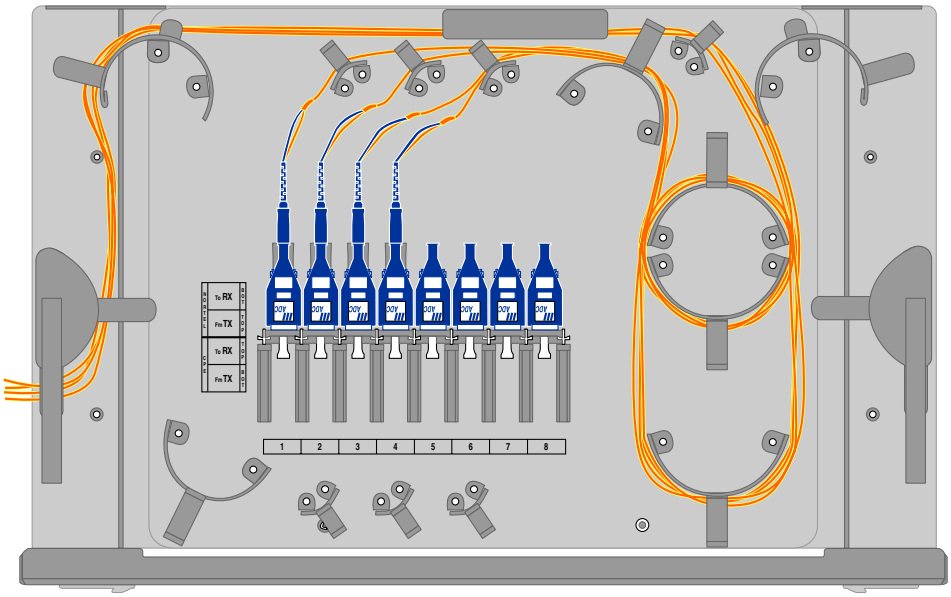

Figure 3-34
Routing subtending optical fibers through the patch panel, (NT0H43CA example)

OM0250p

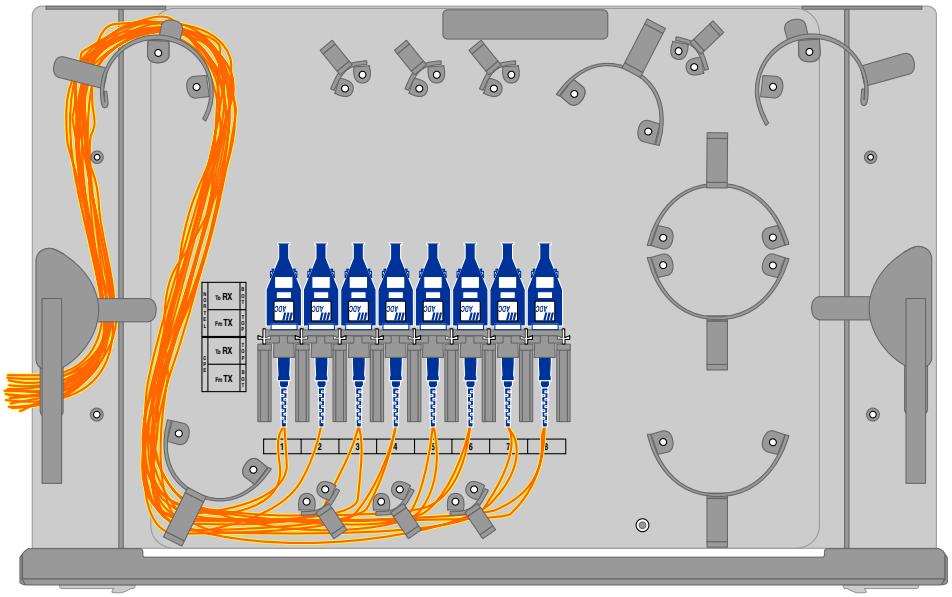

Procedure 3-30
Connecting OCI SRM ESCON circuit packs to subtending equipment through a patch panel

Follow this procedure to connect an OCI SRM ESCON circuit pack to subtending equipment through an NT0H43CA or NT0H43CB patch panel.

It is recommended that this procedure be performed on all eight ports to avoid having to replace potentially defective equipment and/or optical patch cords when service will be added at a later date to ports that are not used during the initial installation. This can be done by temporarily connecting the subtending equipment or an ESCON test set to these ports.

Requirements

Before you begin this procedure make sure

- all connectors are clean. For information on cleaning, see "Cleaning connectors" in *Installing Optical Metro 5200 Shelves and Components*, 323-1701-201.
- you are familiar with how to access connectors in an NT0H43CA or NT0H43CB patch panel. See Procedure 1-16, "Accessing connectors in a patch panel" in part 1 of this document.
- the required number of patch panels (one NT0H43CA or NT0H43CB for every OCI SRM ESCON circuit pack in a shelf) are properly installed in the equipment rack or cabinet.
- the speed of operation of the subtending equipment is within the maximum bit rate supported by the connected OCI SRM ESCON circuit pack. See Table 2-2 in *Technical Specifications,* 323-1701-180 for OCI SRM circuit pack specifications.
- your network planning group has provided you with information regarding attenuator requirements to allow the subtending equipment and the OCI SRM ESCON to interwork properly. See Table 2-2 " Specifications for OCI SRM circuit packs" in *Technical Specifications*, 323-1701-180.

—continued—

Procedure 3-30 (continued)
Connecting OCI SRM ESCON circuit packs to subtending equipment through a patch panel

Table 3-80 lists the tools and materials you require to connect the OCI SRM ESCONs to the subtending equipment through an NT0H43CA or NT0H43CB patch panel.

Table 3-80
Required tools and materials

Item	Quantity	Supplied
Antistatic strap	1	no
Optical fiber cleaning kit	1	no
Fiber inspection scope	1	no
MPO to SC optical patch cords (see Note)	2 for each ESCON SRM circuit pack	no
62.5 um MMF optical patch cord with SC-SC connectors	1	no
Optical power meter (OPM) with an SC Fiber-Optic Adapter	1	no
Optical power meter (OPM) with an a Fiber-Optic Adapter that matches the connector type used on the subtending equipment	1	no
Attenuators	as determined by network planning group (attenuator value also provided by network planning group)	no
Note: Refer to "Fiber-optic patch cords" on page 13-97 in *Network Planning and Link Engineering*, 323-1701-110.		

—continued—

Procedure 3-30 (continued)
Connecting OCI SRM ESCON circuit packs to subtending equipment through a patch panel

Precautions

DANGER
Invisible laser radiation
The Optical Metro 5100/5200 operates up to a Hazard Level of k x 3A (IEC 60825-2:2000) or 1M (IEC 60825-2:2004). Use only viewing instruments with proper optical attenuation.

CAUTION
Risk of affecting network reliability
Make sure that all connectors are cleaned before you make the connections (or re-connections) described in this procedure. For cleaning information, see the chapter "Cleaning connectors", in *Installing Optical Metro 5200 Shelves and Components*, 323-1701-201.

CAUTION
Possible risk of damage to equipment and fiber
Make sure that the bulkhead connectors are lowered and snapped into place before you close the drawers. Failure to do so can cause damage to the connector unit, the fibers attached to the connector unit, or both.

Observe the minimum bend radius of 1.18 inches (30 mm) for the patch cords. Always use the fiber management components in the drawer to route the fiber.

Allow for sufficient slack in the fibers that enter and exit the drawers. If sufficient slack is not left, the fibers can become stretched and damaged when the drawer is opened.

—continued—

Procedure 3-30 (continued)
Connecting OCI SRM ESCON circuit packs to subtending equipment through a patch panel

Action

Step	Action

1 Refer to the following table to determine the connections you must make.

Subtending equipment port label	Patch panel port label	Patch panel port label	OCI SRM ESCON port
RX	CPE To RX	NORTEL Fm TX	TX (see Note)
TX	CPE Fm TX	NORTEL To RX	RX (see Note)
Note: All 8 TX signals are on the same MPO connector on the OCI SRM ESCON faceplate. The MPO TX connector on the OCI SRM ESCON faceplate is labeled TX. All 8 RX signals are on the same MPO connector on the OCI SRM ESCON faceplate. The MPO RX connector on the OCI SRM ESCON faceplate is labeled RX.			

2 Open and fully extend the drawer of the NT0H43CA or NT0H43CB patch panel.

3 Connect the SC-ends of an MPO-to-SC optical patch cord to the patch panel ports using the following table:

Patch panel port label	SC-end color
NORTEL To RX port 1	blue
NORTEL To RX port 2	orange
NORTEL To RX port 3	green
NORTEL To RX port 4	brown
NORTEL To RX port 5	grey
NORTEL To RX port 6	white
NORTEL To RX port 7	red
NORTEL To RX port 8	black
Note: Ports 9 and 10 on patch panel (NT0H43CB) are not used.	

4 Label each SC-end with an RX label, which is supplied with the MPO-to-SC optical patch cord.

—continued—

Procedure 3-30 (continued)
Connecting OCI SRM ESCON circuit packs to subtending equipment through a patch panel

Step	Action
5	Route the MPO to SC optical patch cord through the patch panel as shown in Figure 3-36 on page 3-214 (for patch cords from OCI SRM ESCONs located in slots 10-18) and Figure 3-37 on page 3-215 (for patch cords from OCI SRM ESCONs located in slots 1-8).
6	Route the MPO-to-SC optical patch cord from the patch panel through the vertical fiber brackets and through the shelf fiber management trough to the OCI SRM ESCON shelf slot location. Connect the MPO-end of the optical patch cord to the RX port of the OCI SRM ESCON port.
7	Label the MPO-end with an RX label, which is supplied with the MPO-to-SC optical patch cord.
8	Connect the SC-ends of another MPO-to-SC optical patch cord to the patch panel ports using the following table:

Patch panel port label	**SC-end color**
NORTEL Fm TX port 1	blue
NORTEL Fm TX port 2	orange
NORTEL Fm TX port 3	green
NORTEL Fm TX port 4	brown
NORTEL Fm TX port 5	grey
NORTEL Fm TX port 6	white
NORTEL Fm TX port 7	red
NORTEL Fm TX port 8	black
Note: Ports 9 and 10 on patch panel (NT0H43CB) are not used.	

9	Label each SC-end with a TX label, which is supplied with the MPO-to-SC optical patch cord.
10	Route the MPO-to-SC optical patch cord through the patch panel as shown in Figure 3-36 on page 3-214 (for patch cords from OCI SRM ESCONs located in slots 10-18) and Figure 3-37 on page 3-215 (for patch cords from OCI SRM ESCONs located in slots 1-8).
11	Route the MPO-to-SC optical patch cord from the patch panel through the vertical fiber brackets and through the shelf fiber management trough to the OCI SRM ESCON shelf slot location. Connect the MPO-end of the optical patch cord to the TX port of the OCI SRM ESCON port.
12	Label the MPO-end with a TX label, which is supplied with the MPO-to-SC optical patch cord.

—continued—

Procedure 3-30 (continued)
Connecting OCI SRM ESCON circuit packs to subtending equipment through a patch panel

Step	Action
13	Using a patch cord that you know is error free, measure the Tx signal strength of the subtending equipment that you want to connect to the patch panel port labeled “CPE Fm TX”, as shown in Figure 3-35 on page 3-213.
14	Make sure that the signal strength is within the Tx specifications of the subtending equipment. ***Note:*** If the signal strength is not within the Tx specifications, clean the optical connectors or replace the subtending equipment circuit pack. For information on cleaning, see “Cleaning connectors” in *Installing Optical Metro 5200 Shelves and Components*, 323-1701-201.
15	Connect the patch cord that you will use to interconnect the Tx signal of the subtending equipment to the patch panel port labeled “CPE Fm TX” to the Tx port of the subtending equipment.
16	Connect the other end of the patch cord to the patch panel port labeled “CPE Fm TX” routing the patch cord through the patch panel as shown in Figure 3-38 on page 3-216.
17	Disconnect the patch cord at the “NORTEL To RX” port.
18	Using an SC-SC patch cord that you know is error free, measure the signal strength at the “NORTEL To RX port”.
19	**If** the Rx port on the OCI SRM ESCON — **Then** go to requires attenuation — step 20 does not require attenuation — step 22
20	Clean the attenuator and connect it to the patch panel port labeled “NORTEL To RX”.
21	Using a SC-SC patch cord that you know is error free, measure the signal strength after the attenuator to verify that the attenuator is working correctly.
22	Make sure that the signal strength is within the Rx specifications for the OCI SRM ESCON that you are using. See Table 2-2 in *Technical Specifications*, 323-1701-180 for OCI SRM circuit pack specifications. ***Note:*** If the signal strength is not within the Rx specifications, clean the optical connectors or replace the patch cords. If this does not help, call your next level of support. For information on cleaning, see “Cleaning connectors” in *Installing Optical Metro 5200 Shelves and Components*, 323-1701-201.
23	Connect the patch cord that you disconnected in step 17 to the “NORTEL To RX port”.
24	If a channel assignment is not provisioned between the OCI SRM ESCON port and an OCLD, create a channel assignment between the OCI SRM ESCON port and an OCLD. See Procedure 3-3 “Making or modifying channel assignments”, in *Provisioning and Operating Procedures*, 323-1701-310.

—continued—

Procedure 3-30 (continued)
Connecting OCI SRM ESCON circuit packs to subtending equipment through a patch panel

Step	Action
25	Put the OCI SRM ESCON port facility out-of-service. See Procedure 3-13 "Taking a circuit pack facility or SFP facility out-of-service" in *Provisioning and Operating Procedures*, 323-1701-310.
26	Set up a facility loopback on the OCI SRM ESCON port. See Procedure 3-59 "Creating and modifying a loopback using the System Manager", in *Provisioning and Operating Procedures*, 323-1701-310. Make sure that you select Facility for the type of loopback.
27	Using an SC-SC optical patch cord which is known to be error-free, measure the signal strength at the patch panel port labeled "CPE To RX".
28	Make sure that the signal strength is within the Tx specifications for the type of OCI SRM ESCON that you are using. See Table 2-2 in *Technical Specifications*, 323-1701-180 for OCI SRM circuit pack specifications. ***Note:*** If the signal strength is not within the Tx specifications, try cleaning the optical connectors or replacing the OCI SRM ESCON circuit pack. For information on cleaning, see "Cleaning connectors" in *Installing Optical Metro 5200 Shelves and Components*, 323-1701-201.
29	Disconnect the patch cord at the "NORTEL Fm TX" port.
30	**If** the Tx port on the OCI SRM ESCON — **Then** go to requires attenuation — step 31 does not require attenuation — step 34
31	Clean the attenuator and connect it to patch cord that you disconnected in step 29.
32	Measure the signal strength after the attenuator to verify that the attenuator is working correctly.
33	Connect the patch cord (which has the attenuator installed) to the patch panel port labeled "NORTEL Fm TX".
34	Connect a patch cord that you will use to interconnect the patch panel port labeled "CPE To RX" to the subtending equipment Rx port to the patch panel port labeled "CPE To RX" and route as shown in Figure 3-38 on page 3-216.
35	Measure and record the strength of the Tx signal at the end of the patch cord that will connect to the Rx port of the subtending equipment.
36	Make sure that the signal strength is within the Rx specifications of the subtending equipment. ***Note:*** If the signal strength is not within the Rx specifications, clean the optical connectors or replace the patch cords. If this does not help, call your next level of support. For information on cleaning, see "Cleaning connectors" in *Installing Optical Metro 5200 Shelves and Components*, 323-1701-201.

—continued—

Procedure 3-30 (continued)
Connecting OCI SRM ESCON circuit packs to subtending equipment through a patch panel

Step	Action
37	Connect the patch cord to the Rx port of the subtending equipment.
38	Clear the OCI SRM ESCON port facility loopback. See Procedure 3-59 "Creating and modifying a loopback using the System Manager", in *Provisioning and Operating Procedures*, 323-1701-310.
39	If necessary, put the OCI SRM ESCON port facility back in-service. See Procedure 3-10 "Putting a circuit pack or SFP facility in-service", in *Provisioning and Operating Procedures*, 323-1701-310.
40	If necessary, delete the channel assignment you provisioned in step 24. See Procedure 3-4 "Deleting channel assignments", in *Provisioning and Operating Procedures*, 323-1701-310.
41	If necessary, repeat step 13 to step 40 for other OCI SRM ESCON ports.
42	Close the patch panel drawer.

—end—

Figure 3-35
Measuring signal strength of the subtending equipment

OM0174s

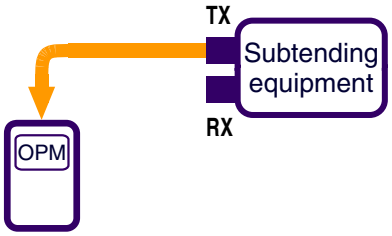

Figure 3-36
Routing OCI SRM ESCON (MPO-to-SC) patch cords from OCI SRM ESCON circuit packs in slots 10-18, (NT0H43CA patch panel example)

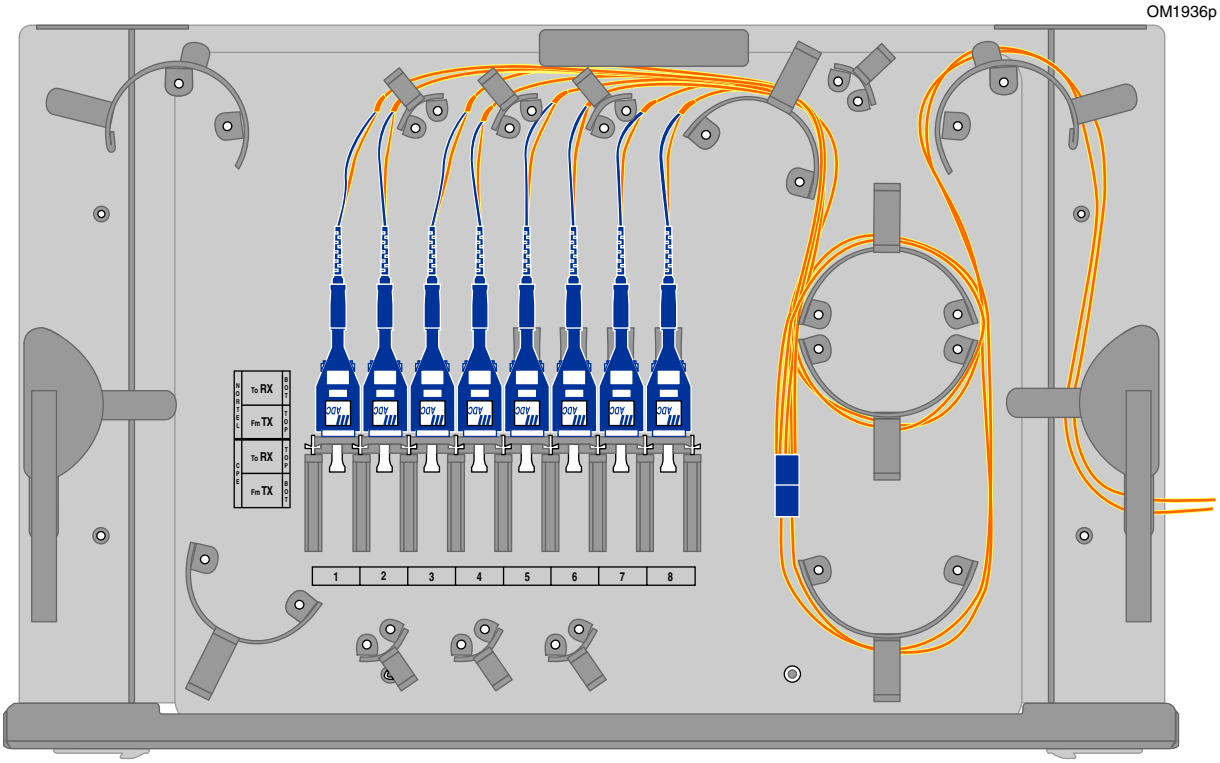

Figure 3-37
Routing OCI SRM ESCON (MPO-to-SC) patch cords from OCI SRM ESCON circuit packs in slots 1-8, (NT0H43CA patch panel example)

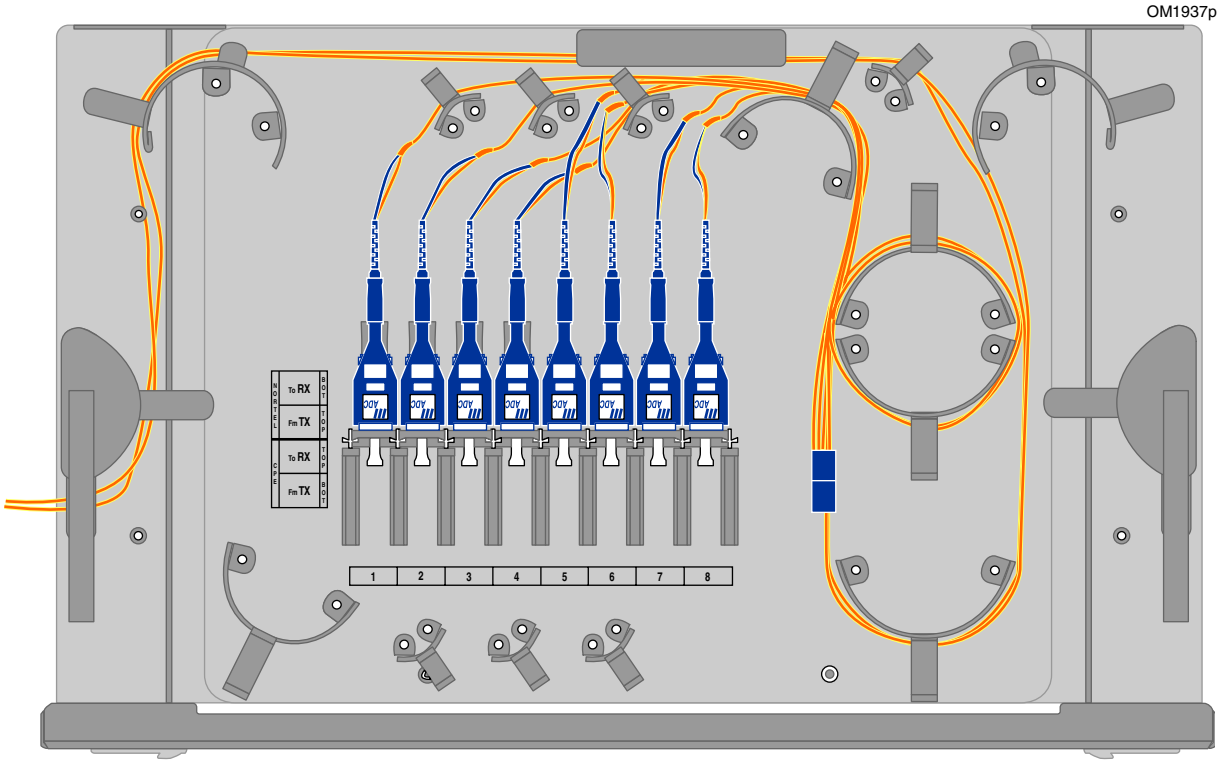

Figure 3-38
Routing subtending optical fibers through the patch panel, (NT0H43CA patch panel example)

OM0250p

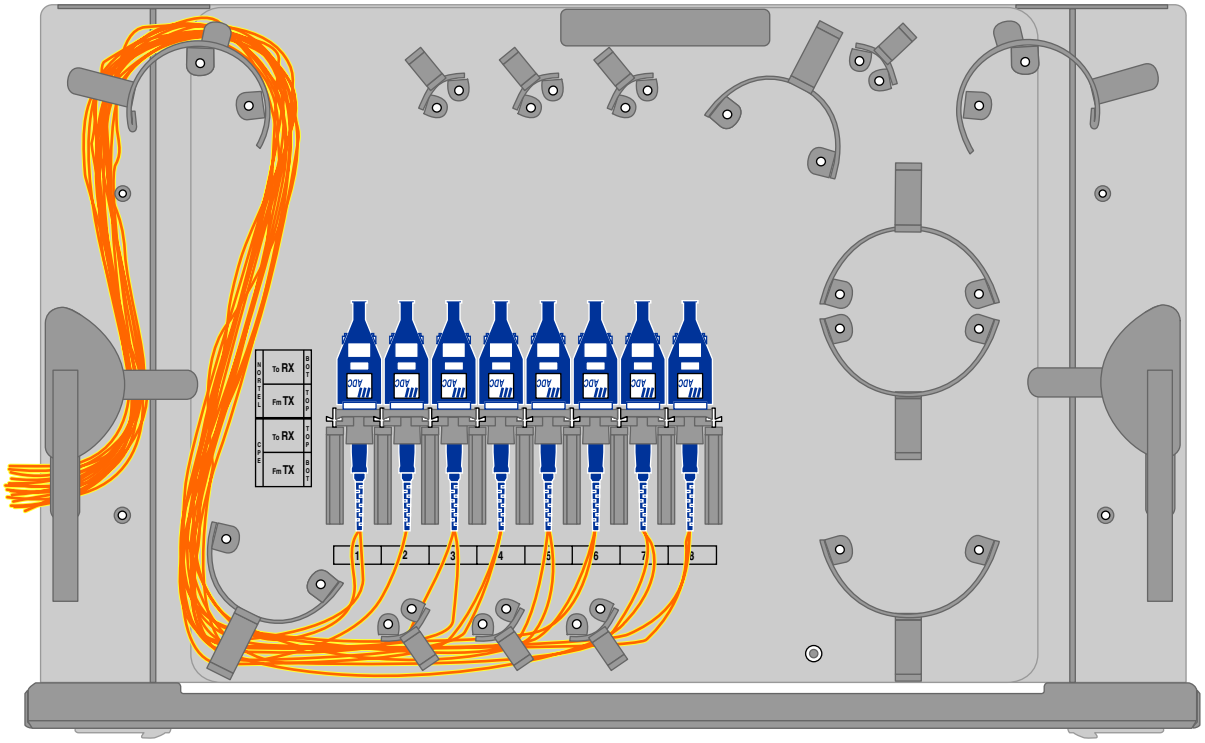

Procedure 3-31
Connecting OCI SRM GbE/FC or OCI SRM GbE circuit packs to subtending equipment

Follow this procedure to connect OCI SRM GbE/FC and OCI SRM GbE circuit packs to the subtending equipment.

Note: Although this procedure only refers to OCI SRM GbE/FC, you can substitute for OCI SRM GbE.

Requirements

Before you begin this procedure make sure

- all connectors are clean. For information on cleaning, see "Cleaning connectors" in *Installing Optical Metro 5200 Shelves and Components*, 323-1701-201.
- the speed of operation of the subtending equipment is within the maximum bit rate supported by the connected OCI SRM GbE/FC circuit pack. See Table 2-2 " Specifications for OCI SRM circuit packs" in *Technical Specifications*, 323-1701-180.
- your network planning group has provided you with information regarding attenuator requirements to allow the subtending equipment and the OCI SRM GbE/FC to interwork properly. See Table 2-2 in *Technical Specifications*, 323-1701-180 for OCI SRM circuit pack specifications.

—continued—

Procedure 3-31 (continued)
Connecting OCI SRM GbE/FC or OCI SRM GbE circuit packs to subtending equipment

Table 3-81 lists the tools and materials you require to connect the OCI SRM GbE/FC to the subtending equipment.

Table 3-81
Required tools and materials

Item	Quantity	Supplied
Antistatic strap	1	no
Optical fiber cleaning kit	1	no
Fiber inspection scope	1	no
LC-to-SC SMF optical patch cords if you are connecting the 1310 nm version of the OCI SRM GbE/FC circuit pack	2 for each port	no
LC-to-SC MMF optical patch cords if you are connecting the 850 nm version of the OCI SRM GbE/FC circuit pack	2 for each port	no
Optical power meter (OPM) with an LC Fiber-Optic Adapter	1	no
Optical power meter (OPM) with an a Fiber-Optic Adapter that matches the connector type used on the subtending equipment	1	no
Attenuators	as determined by network planning group (attenuator value also provided by network planning group)	no

—continued—

Procedure 3-31 (continued)
Connecting OCI SRM GbE/FC or OCI SRM GbE circuit packs to subtending equipment

Precautions

DANGER
Invisible laser radiation
The Optical Metro 5100/5200 operates up to a Hazard Level of k x 3A (IEC 60825-2:2000) or 1M (IEC 60825-2:2004). Use only viewing instruments with proper optical attenuation.

CAUTION
Risk of affecting network reliability
Make sure that all connectors are cleaned before you make the connections (or re-connections) described in this procedure. For cleaning information, see the chapter "Cleaning connectors", in *Installing Optical Metro 5200 Shelves and Components*, 323-1701-201.

CAUTION
Risk of equipment damage
If optical power exceeds the maximum input power (Rx) of the OCI SRM GbE/FC circuit pack, damage to the OCI SRM GbE/FC can result.

CAUTION
Possible risk of damage to equipment and fiber
Make sure that the bulkhead connectors are lowered and snapped into place before you close the drawers. Failure to do so could cause damage to the connector unit, the fibers attached to the connector unit, or both.

Observe the minimum bend radius of 1.18 inches (30 mm) for the patch cords. Always use the fiber management components in the drawer to route the fiber.

Allow for sufficient slack in the fibers that enter and exit the drawers. If sufficient slack is not left, the fibers can become stretched and damaged when the drawer is opened.

—continued—

Procedure 3-31 (continued)
Connecting OCI SRM GbE/FC or OCI SRM GbE circuit packs to subtending equipment

Action

Step	Action

1 Refer to the following table to determine the connections you must make.

From OCI SRM GbE/FC	To subtending equipment
RX (port 1 or port 2)	TX
TX (port 1 or port 2)	RX

2 Using a patch cord that you know is error free, measure the Tx signal strength of the subtending equipment that you want to connect to the Rx port of the OCI SRM GbE/FC, as shown in Figure 3-39 on page 3-222.

3 Make sure that the signal strength is within the Tx specifications of the subtending equipment.

Note: If the signal strength is not within the Tx specifications, clean the optical connectors or replace the subtending equipment circuit pack. For information on cleaning, see "Cleaning connectors" in *Installing Optical Metro 5200 Shelves and Components*, 323-1701-201.

4 Connect the patch cord that you will use to interconnect the Tx signal of the subtending equipment to the Rx port of the OCI SRM GbE/FC to the Tx port of the subtending equipment.

5 Measure and record the strength of the Tx signal at the end of the patch cord that will connect to the Rx port of the OCI SRM GbE/FC.

6

If the Rx port on the OCI SRM GbE/FC	**Then** go to
requires attenuation	step 7
does not require attenuation	step 9

7 Clean the attenuator and connect it to the end of the optical patch cord that will connect to the Rx port of the OCI SRM GbE/FC.

Note: If you do not have an LC attenuator, you can choose to add the attenuator at the Tx port of the subtending equipment.

—continued—

Procedure 3-31 (continued)
Connecting OCI SRM GbE/FC or OCI SRM GbE circuit packs to subtending equipment

Step	Action
8	Measure the signal strength to verify that the attenuator is working correctly.
9	Make sure that the signal strength is within the Rx specifications for the type of OCI SRM GbE/FC that you are using. See Table 2-2 in *Technical Specifications*, 323-1701-180 for OCI SRM circuit pack specifications. ***Note:*** If the signal strength is not within the Rx specifications, clean the optical connectors or replace the patch cords. If this does not help, call your next level of support. For information on cleaning, see "Cleaning connectors" in *Installing Optical Metro 5200 Shelves and Components*, 323-1701-201.
10	Route the optical patch cord through the fiber management trough and the vertical fiber brackets to the subtending equipment. Connect the patch cord to the Rx port of the OCI SRM GbE/FC. ***Note:*** If the patch cord is duplex, connect the other LC-end of the patch cord to the Tx port of the OCI SRM GbE/FC.
11	If a channel assignment is not provisioned on the OCI SRM GbE/FC port you are connecting, create a channel assignment. See Procedure 3-3 "Making or modifying channel assignments", in *Provisioning and Operating Procedures*, 323-1701-310.
12	Put the OCI SRM GbE/FC client-side facility you are connecting in out-of-service. See Procedure 3-13 "Taking a circuit pack facility or SFP facility out-of-service" in *Provisioning and Operating Procedures*, 323-1701-310.
13	Set up a client-side facility loopback on the OCI SRM GbE/FC port you are connecting. See Procedure 3-59 "Creating and modifying a loopback using the System Manager", in *Provisioning and Operating Procedures*, 323-1701-310. Make sure that you select Facility for the type of loopback.
14	Using a patch cord that you know is error free, measure the Tx signal strength of the Tx port of the OCI SRM GbE/FC that you want to connect to the Rx port of the subtending equipment.
15	Make sure that the signal strength is within the Tx specifications for the type of OCI SRM GbE/FC that you are using. See Table 2-2 " Specifications for OCI SRM circuit packs" in *Technical Specifications*, 323-1701-180. ***Note:*** If the signal strength is not within the Tx specifications, clean the optical connectors or replace the OCI SRM GbE/FC circuit pack. For information on cleaning, see "Cleaning connectors" in *Installing Optical Metro 5200 Shelves and Components*, 323-1701-201.
16	Connect the patch cord that you will use to interconnect the Tx signal of the Tx port of the OCI SRM GbE/FC to the Rx port of the subtending equipment to the Tx port of the OCI SRM GbE/FC. ***Note:*** If the patch cord is duplex, then you have already done this in step 10.

—continued—

Procedure 3-31 (continued)
Connecting OCI SRM GbE/FC or OCI SRM GbE circuit packs to subtending equipment

Step	Action
17	Measure and record the strength of the Tx signal at the end of the patch cord that will connect to the Rx port of the subtending equipment.
18	**If** the Rx port on the subtending equipment / **Then** go to requires attenuation — step 19 does not require attenuation — step 21
19	Clean the attenuator and connect it to the end of the optical patch cord that will connect to the Rx port of the subtending equipment.
20	Measure the signal strength to verify that the attenuator is working correctly.
21	Make sure that the signal strength is within the Rx specifications of the subtending equipment. ***Note:*** If the signal strength is not within the Rx specifications, clean the optical connectors or replace the patch cords. If this does not help, call your next level of support. For information on cleaning, see "Cleaning connectors" in *Installing Optical Metro 5200 Shelves and Components*, 323-1701-201.
22	Route the optical patch cord through the fiber management trough and the vertical fiber brackets to the subtending equipment. Connect the patch cord to the Rx port on the subtending equipment.
23	Clear the OCI SRM GbE/FC client-side facility loopback. See Procedure 3-60 "Removing a loopback using the System Manager", in *Provisioning and Operating Procedures*, 323-1701-310.
24	If necessary, put the OCI SRM GbE/FC client-side facility back in-service. See Procedure 3-10 "Putting a circuit pack or SFP facility in-service", in *Provisioning and Operating Procedures*, 323-1701-310.
25	If necessary, delete the channel assignment you provisioned in step 11. See Procedure 3-4 "Deleting channel assignments", in *Provisioning and Operating Procedures*, 323-1701-310.

—end—

Figure 3-39
Measuring signal strength of the subtending equipment

OM0174s

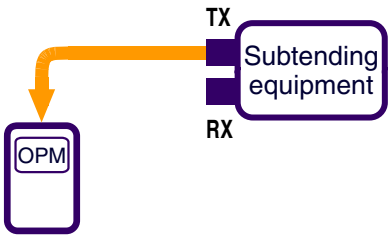

Procedure 3-32
Connecting OCI SRM 1310 nm LC circuit packs to subtending equipment

Follow this procedure to connect OCI SRM 1310 nm LC circuit packs to the subtending equipment.

Requirements

Before you begin this procedure make sure

- all connectors are clean. For information on cleaning, see "Cleaning connectors" in *Installing Optical Metro 5200 Shelves and Components*, 323-1701-201.
- the speed of operation of the subtending equipment is within the maximum bit rate supported by the connected OCI SRM 1310 nm LC circuit pack. See "Circuit pack specifications" in *Technical Specifications,* 323-1701-180 for OCI SRM 1310 nm circuit pack specifications.
- your network planning group has provided you with information regarding attenuator requirements to allow the subtending equipment and the OCI SRM 1310 nm LC circuit pack to interwork correctly. See "Circuit pack specifications" in *Technical Specifications,* 323-1701-180 for OCI SRM 1310 nm circuit pack specifications.

  Note: Attenuators cannot be connected to the OCI SRM 1310 nm LC circuit pack ports. This type of connection prevents the installation of the shelf cover. The attenuators can be connected to the subtending equipment ports. If connecting the attenuators to the subtending equipment is not possible, then a patch panel is needed. If a patch panel is needed to hold the attenuators, follow Procedure 3-29, "Connecting OCI SRM circuit packs to subtending equipment through a patch panel".

—continued—

Procedure 3-32 (continued)
Connecting OCI SRM 1310 nm LC circuit packs to subtending equipment

Table 3-82 lists the tools and materials you require to connect the OCI SRM 1310 nm LC circuit pack to the subtending equipment.

Table 3-82
Required tools and materials

Item	Quantity	Supplied
Antistatic strap	1	no
Fiber-optic cleaning kit	1	no
Fiber inspection scope	1	no
LC to SC duplex optical patch cord ***Note:*** If the subtending equipment is less than 3.12 m (123 in.) away and the subtending equipment uses SC connectors, then the NT0H4385 patch cord can be used.	1 for each port	no
Optical power meter (OPM) with an LC and an SC Fiber-Optic Adapter	1	no
Optical power meter (OPM) with an a Fiber-Optic Adapter that matches the connector type used on the subtending equipment	1	no
Attenuators ***Note:*** Attenuators cannot be connected to the OCI SRM 1310 nm LC circuit pack ports. This type of connection prevents the installation of the shelf cover. The attenuators can be connected to the subtending equipment ports. If connecting attenuators to the subtending equipment is not possible, then a patch panel is needed. If a patch panel is needed to hold the attenuators, follow Procedure 3-29, "Connecting OCI SRM circuit packs to subtending equipment through a patch panel".	as determined by network planning group (attenuator value also provided by network planning group)	no

—continued—

Procedure 3-32 (continued)
Connecting OCI SRM 1310 nm LC circuit packs to subtending equipment

Precautions

DANGER
Invisible laser radiation
The Optical Metro 5100/5200 operates up to a Hazard Level of k x 3A (IEC 60825-2:2000) or 1M (IEC 60825-2:2004). Use only viewing instruments with proper optical attenuation.

CAUTION
Risk of affecting network reliability
Make sure that all connectors are cleaned before you make the connections (or re-connections) described in this procedure. For cleaning information, see the chapter "Cleaning connectors", in *Installing Optical Metro 5200 Shelves and Components*, 323-1701-201.

CAUTION
Possible risk of damage to equipment and fiber
Make sure that the bulkhead connectors are lowered and snapped into place before you close the drawers. Failure to do so can cause damage to the connector unit, the fibers attached to the connector unit, or both.

Observe the minimum bend radius of 1.18 inches (30 mm) for the patch cords. Always use the fiber management components in the drawer to route the fiber.

Allow for sufficient slack in the fibers that enter and exit the drawers. If sufficient slack is not left, the fibers can become stretched and damaged when the drawer is opened.

—continued—

Procedure 3-32 (continued)
Connecting OCI SRM 1310 nm LC circuit packs to subtending equipment

Action

Step	Action

1 Refer to the following table to determine the connections you must make.

From OCI SRM 1310 nm LC	To subtending equipment
RX	TX
TX	RX

2 Using a patch cord that you know is error free, measure the Tx signal strength of the subtending equipment that you want to connect to the Rx port of the OCI SRM 1310 nm LC circuit pack, as shown in Figure 3-40 on page 3-229.

3 Make sure that the signal strength is within the Tx specifications of the subtending equipment.

Note: If the signal strength is not within the Tx specifications, clean the optical connectors or replace the subtending equipment circuit pack. For information on cleaning, see Procedure 9-1 "Cleaning SC, LC, or FC-type connectors (simplex or duplex)" in *Installing Optical Metro 5200 Shelves and Components*, 323-1701-201.

4

If the Tx port on the subtending equipment	**Then** go to
requires an attenuator	step 5
does not require an attenuator	step 7

5 Clean the attenuator and connect it to the Tx port of the subtending equipment.

6 Measure the signal strength to verify that the attenuator is working correctly.

7 Connect the patch cord that will be used to interconnect the Tx signal of the subtending equipment to the Rx port of the OCI SRM 1310 nm LC circuit pack to the Tx port of the subtending equipment.

8 Measure and record the strength of the Tx signal at the end of the patch cord that will connect to the Rx port of the OCI SRM 1310 nm LC circuit pack.

—continued—

Procedure 3-32 (continued)
Connecting OCI SRM 1310 nm LC circuit packs to subtending equipment

Step	Action
9	Make sure that the signal strength is within the Rx specifications of the OCI SRM 1310 LC circuit pack. See "Circuit pack specifications" in *Technical Specifications,* 323-1701-180 for OCI SRM 1310 nm circuit pack specifications. ***Note:*** If the signal strength is not within the Rx specifications, try cleaning the optical connectors or replacing patch cords. If this doesn't help, call your next level of support. For information on cleaning, see "Cleaning connectors" in *Installing Optical Metro 5200 Shelves and Components*, 323-1701-201.
10	Route the optical patch cord through the fiber management trough and the vertical fiber brackets to the subtending equipment. Connect the patch cord to the Rx port on the faceplate of the OCI SRM 1310 LC circuit pack.
11	If a channel assignment is not provisioned on the OTR, create a channel assignment. See Procedure 3-3 "Making or modifying channel assignments" in *Provisioning and Operating Procedures*, 323-1701-310.
12	Put the OCI SRM 1310 nm LC circuit pack port facility out of service. See Procedure 3-13 "Taking a circuit pack facility or SFP facility out-of-service" in *Provisioning and Operating Procedures*, 323-1701-310.
13	Set up a facility loopback on the OCI SRM 1310 nm LC circuit pack port. See Procedure 3-59 "Creating and modifying a loopback using the System Manager" in *Provisioning and Operating Procedures*, 323-1701-310.
14	Using a patch cord that you know is error free, measure the Tx signal strength of the OCI SRM 1310 nm LC circuit pack that you want to connect to the Rx port of the subtending equipment.

—continued—

Procedure 3-32 (continued)
Connecting OCI SRM 1310 nm LC circuit packs to subtending equipment

Step	Action
15	Make sure that the signal strength is within the Tx specifications of the OCI SRM 1310 LC circuit pack. See "Circuit pack specifications" in *Technical Specifications,* 323-1701-180 for OCI SRM 1310 nm circuit pack specifications. ***Note:*** If the signal strength is not within the Tx specifications, clean the optical connectors or replace the OCI SRM 1310 LC circuit pack. For information on cleaning, see "Cleaning connectors" in *Installing Optical Metro 5200 Shelves and Components*, 323-1701-201.
16	Connect the patch cord that you will use to interconnect the Tx signal of the OCI SRM 1310 LC circuit pack to the Rx port of the subtending equipment to the Tx port of the OCI SRM 1310 LC circuit pack.
17	Measure and record the strength of the Tx signal at the end of the patch cord that will connect to the Rx port of the subtending equipment.
18	**If** the Rx port on the subtending equipment — **Then** go to requires an attenuator — step 19 does not require an attenuator — step 21
19	Clean the attenuator and connect it to the end of the optical patch cord that will connect to the Rx port of the subtending equipment.
20	Measure the signal strength to verify that the attenuator is working correctly.
21	Make sure that the signal strength is within the Rx specifications of the subtending equipment. ***Note:*** If the signal strength is not within the Rx specifications, clean the optical connectors or replace patch cords. If this action does not help, call your next level of support. For information on cleaning, see "Cleaning connectors" in *Installing Optical Metro 5200 Shelves and Components*, 323-1701-201.
22	Route the optical patch cord through the fiber management trough and the vertical fiber brackets to the subtending equipment. Connect the patch cord to the Rx port on the subtending equipment.
23	Clear the OCI SRM 1310 nm LC circuit pack port facility loopback. See Procedure 3-60 "Removing a loopback using the System Manager" in *Provisioning and Operating Procedures*, 323-1701-310.

—continued—

Procedure 3-32 (continued)
Connecting OCI SRM 1310 nm LC circuit packs to subtending equipment

Step	Action
24	If necessary, put the OCI SRM 1310 nm LC circuit pack port facility back in service. See Procedure 3-7 “Putting a circuit pack or SFP in-service” in *Provisioning and Operating Procedures*, 323-1701-310.
25	If necessary, delete the channel assignment provisioned in step 11. See Procedure 3-4 “Deleting channel assignments” in *Provisioning and Operating Procedures*, 323-1701-310.
26	If necessary, repeat step 1 to step 25 for other OCI SRM 1310 nm LC circuit pack ports.

—end—

Figure 3-40
Measuring signal strength of the subtending equipment

OM0174s

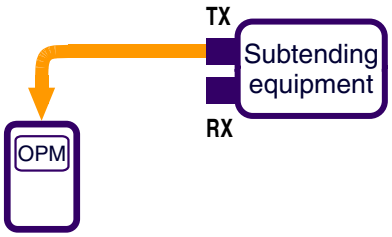

Procedure 3-33
Connecting OCI SRM 1310 nm LC circuit packs to subtending equipment through a patch panel

Follow this procedure to connect an OCI SRM 1310 nm LC circuit pack to subtending equipment through an NT0H43CA or NT0H43CB patch panel.

Requirements

Before you begin this procedure make sure

- all connectors are clean. For information on cleaning, see "Cleaning connectors" in *Installing Optical Metro 5200 Shelves and Components*, 323-1701-201.
- you are familiar with how to access connectors in an NT0H43CA or NT0H43CB patch panel. See Procedure 1-16, "Accessing connectors in a patch panel" in part 1 of this document.
- the required number of patch panels (one NT0H43CA or NT0H43CB for every two OCI SRM 1310 nm circuit pack in a shelf) are correctly installed in the equipment rack or cabinet
- the speed of operation of the subtending equipment is within the maximum bit rate supported by the connected OCI SRM 1310 nm LC circuit pack. See "Circuit pack specifications" in *Technical Specifications,* 323-1701-180 for OCI SRM 1310 nm circuit pack specifications.
- your network planning group has provided you with information regarding attenuator requirements to allow the subtending equipment and the OCI SRM 1310 nm LC circuit pack to interwork correctly. See "Circuit pack specifications" in *Technical Specifications,* 323-1701-180 for OCI SRM 1310 nm circuit pack specifications.

—continued—

Procedure 3-33 (continued)
Connecting OCI SRM 1310 nm LC circuit packs to subtending equipment through a patch panel

Table 3-83 lists the tools and materials you require to connect the OCI SRM 1310 nm LC circuit packs to subtending equipment.

Table 3-83
Required tools and materials

Item	Quantity	Supplied
Antistatic strap	1	no
Optical fiber cleaning kit	1	no
Fiber inspection scope	1	no
NT0H4385 LC to SC optical patch cords	1 for each port	no
Optical patch cord with SC-SC connectors	1	no
Optical power meter (OPM) with an LC Fiber-Optic Adapter	1	no
Optical power meter (OPM) with an SC Fiber-Optic Adapter	1	no
Optical power meter (OPM) with an a Fiber-Optic Adapter that matches the connector type used on the subtending equipment	1	no
Attenuators	as determined by network planning group (attenuator value also provided by network planning group)	no

—continued—

Procedure 3-33 (continued)
Connecting OCI SRM 1310 nm LC circuit packs to subtending equipment through a patch panel

Precautions

DANGER
Invisible laser radiation
The Optical Metro 5100/5200 operates up to a Hazard Level of k x 3A (IEC 60825-2:2000) or 1M (IEC 60825-2:2004). Use only viewing instruments with proper optical attenuation.

CAUTION
Risk of affecting network reliability
Make sure that all connectors are cleaned before you make the connections (or re-connections) described in this procedure. For cleaning information, see the chapter "Cleaning connectors", in *Installing Optical Metro 5200 Shelves and Components*, 323-1701-201.

CAUTION
Possible risk of damage to equipment and fiber
Make sure that the bulkhead connectors are lowered and snapped into place before you close the drawers. Failure to do so can cause damage to the connector unit, the fibers attached to the connector unit, or both.

Observe the minimum bend radius of 1.18 inches (30 mm) for the patch cords. Always use the fiber management components in the drawer to route the fiber.

Allow for sufficient slack in the fibers that enter and exit the drawers. If sufficient slack is not left, the fibers can become stretched and damaged when the drawer is opened.

—continued—

Procedure 3-33 (continued)
Connecting OCI SRM 1310 nm LC circuit packs to subtending equipment through a patch panel

Action

Step	Action

1 Refer to the following table to determine the connections you must make.

Subtending equipment port label	Patch panel port label	Patch panel port label	OCI SRM 1310 nm LC port
RX	CPE To RX	NORTEL Fm TX	TX
TX	CPE Fm TX	NORTEL To RX	RX

2 Open and fully extend the drawer of the NT0H43CA or NT0H43CB patch panel.

3 Using a patch cord that you know is error free, measure the Tx signal strength of the subtending equipment that you want to connect to the patch panel port labeled “CPE Fm TX”, as shown in Figure 3-41 on page 3-236.

4 Make sure that the signal strength is within the Tx specifications of the subtending equipment.

Note: If the signal strength is not within the Tx specifications, clean the optical connectors or replace the subtending equipment circuit pack. For information on cleaning, see “Cleaning connectors” in *Installing Optical Metro 5200 Shelves and Components*, 323-1701-201.

5 Connect the patch cord that you will use to interconnect the Tx signal of the subtending equipment to the patch panel port labeled “CPE Fm TX” to the Tx port of the subtending equipment.

6 Connect the other end of the patch cord to the patch panel port labeled “CPE Fm TX” routing the patch cord through the patch panel as shown in Figure 3-44 on page 3-238.

7

If the Rx port on the OCI SRM 1310 nm LC circuit pack	**Then** go to
requires attenuation	step 8
does not require attenuation	step 10

8 Clean the attenuator and connect it to the patch panel port labeled “NORTEL To RX”.

9 Using a SC-SC patch cord that you know is error free, measure the signal strength after the attenuator to verify that the attenuator is working correctly.

10 Connect the SC orange-end of the LC to SC optical patch cord to the patch panel port labeled “NORTEL To RX”.

11 Measure the signal strength at the LC orange-end of the LC to SC optical patch cord.

—continued—

Procedure 3-33 (continued)
Connecting OCI SRM circuit packs to subtending equipment through a patch panel

Step	Action
12	Make sure that the signal strength is within the Rx specifications of the OCI SRM 1310 LC circuit pack. See "Circuit pack specifications" in *Technical Specifications,* 323-1701-180 for OCI SRM 1310 nm circuit pack specifications. ***Note:*** If the signal strength is not within the Rx specifications, clean the optical connectors or replace patch cords. If this action does not help, call your next level of support. For information on cleaning, see "Cleaning connectors" in *Installing Optical Metro 5200 Shelves and Components*, 323-1701-201.
13	Route the LC to SC optical patch cord through the fiber management trough and the vertical fiber brackets to the patch panel. Connect the LC orange-end of the LC to SC optical patch cord to the OCI SRM 1310 nm LC circuit pack Rx port and the LC yellow-end to the OCI SRM 1310 nm LC circuit pack Tx port.
14	Route the LC to SC optical patch cord through the patch panel as shown in Figure 3-42 on page 3-236 (for patch cords from OCI SRM 1310 nm LC circuit packs located in slots 10-18) and Figure 3-43 on page 3-237 (for patch cords from OCI SRM 1310 nm LC circuit packs located in slots 1-8).
15	If a channel assignment is not provisioned on the OTR, create a channel assignment. See Procedure 3-3 "Making or modifying channel assignments" in *Provisioning and Operating Procedures*, 323-1701-310.
16	Put the OCI SRM 1310 nm LC circuit pack port facility out of service. See the procedure on taking a circuit pack facility out of service in *Provisioning and Operating Procedures*, 323-1701-310 for Rel. 6.1, Rel. 6.0, Rel. 5.0 and Rel. 4.1.
17	Set up a facility loopback on the OCI SRM 1310 nm LC circuit pack port. See Procedure 3-59 "Creating and modifying a loopback using the System Manager", in *Provisioning and Operating Procedures*, 323-1701-310. Make sure that you select Facility for the type of loopback.
18	Measure the signal strength at the SC yellow end of the LC to SC optical patch cord.
19	Make sure that the signal strength is within the Tx specifications of the OCI SRM 1310 LC circuit pack. See "Circuit pack specifications" in *Technical Specifications,* 323-1701-180 for OCI SRM 1310 nm circuit pack specifications. ***Note:*** If the signal strength is not within the Tx specifications, clean the optical connectors or replace the OCI SRM 1310 LC circuit pack. For information on cleaning, see "Cleaning connectors" in *Installing Optical Metro 5200 Shelves and Components*, 323-1701-201.

—continued—

Procedure 3-33 (continued)
Connecting OCI SRM circuit packs to subtending equipment through a patch panel

Step	Action
20	**If** the Tx port on the OCI SRM 1310 nm LC circuit pack **Then** go to requires attenuation — step 21 does not require attenuation — step 23
21	Clean the attenuator and connect it to the SC yellow end of the LC to SC optical patch cord.
22	Measure the signal strength after the attenuator to verify that the attenuator is working correctly.
23	Connect the SC yellow end of the LC to SC optical patch cord to the patch panel port labeled “NORTEL Fm TX”.
24	Connect a patch cord that you will use to interconnect the patch panel port labeled “CPE To RX” to the subtending equipment Rx port to the patch panel port labeled “CPE To RX” and route as shown in Figure 3-34 on page 3-205.
25	Measure and record the strength of the Tx signal at the end of the patch cord that will connect to the Rx port of the subtending equipment.
26	Make sure that the signal strength is within the Rx specifications of the subtending equipment. ***Note:*** If the signal strength is not within the Rx specifications, clean the optical connectors or replace patch cords. If this action does not help, call your next level of support. For information on cleaning, see “Cleaning connectors” in *Installing Optical Metro 5200 Shelves and Components*, 323-1701-201.
27	Connect the patch cord to the Rx port of the subtending equipment.
28	Clear the OCI SRM 1310 nm LC circuit pack port facility loopback. See Procedure 3-60 “Removing a loopback using the System Manager”, in *Provisioning and Operating Procedures*, 323-1701-310.
29	If necessary, put the OCI SRM 1310 nm LC circuit pack port facility back in service. See Procedure 3-7 “Putting a circuit pack or SFP in-service” in *Provisioning and Operating Procedures*, 323-1701-310.
30	If necessary, delete the channel assignment provisioned in step 15. See Procedure 3-4 “Deleting channel assignments”, in *Provisioning and Operating Procedures*, 323-1701-310.
31	If necessary, repeat step 3 to step 30 for other OCI SRM 1310 nm LC circuit pack ports.
32	Close the patch panel drawer.

—end—

Figure 3-41
Measuring signal strength of the subtending equipment

OM0174s

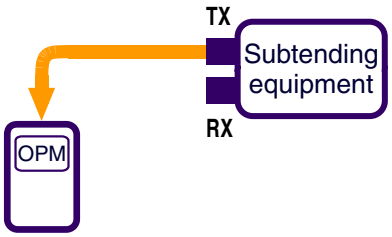

Figure 3-42
Routing OCI SRM 1310 nm LC circuit pack (LC to SC) patch cords from OCI SRM 1310 nm LC circuit packs in slots 10 - 18

OM0249p

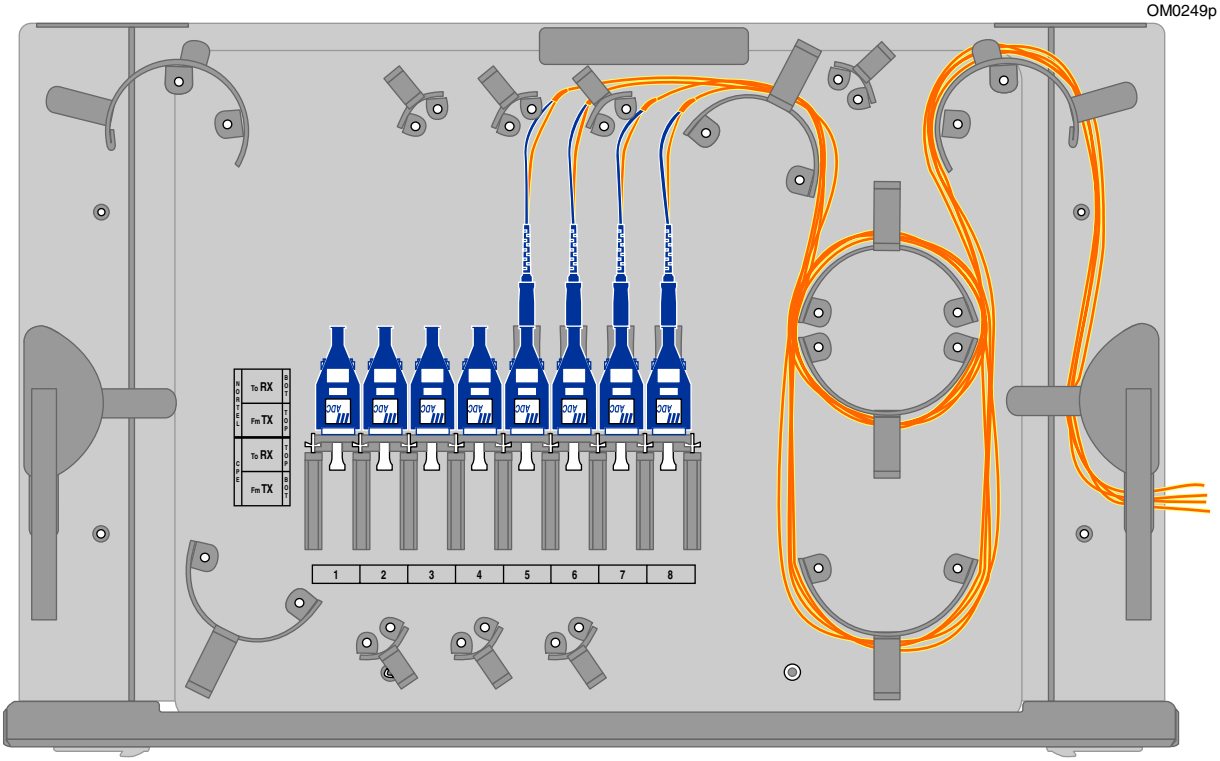

Figure 3-43
Routing OCI SRM 1310 nm LC circuit pack (LC to SC) patch cords from OCI SRM 1310 nm LC circuit packs in slots 1 - 8

OM0260p

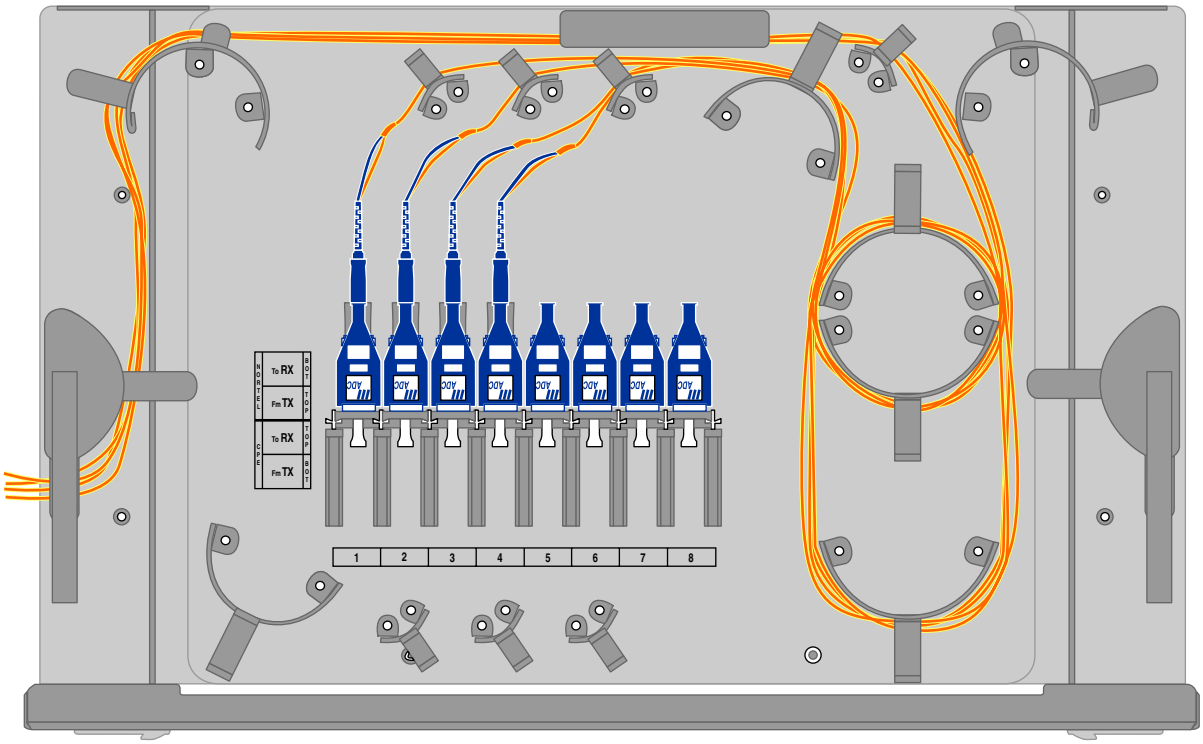

Figure 3-44
Routing subtending optical fibers through the patch panel (NT0H43CA example)

OM0250p

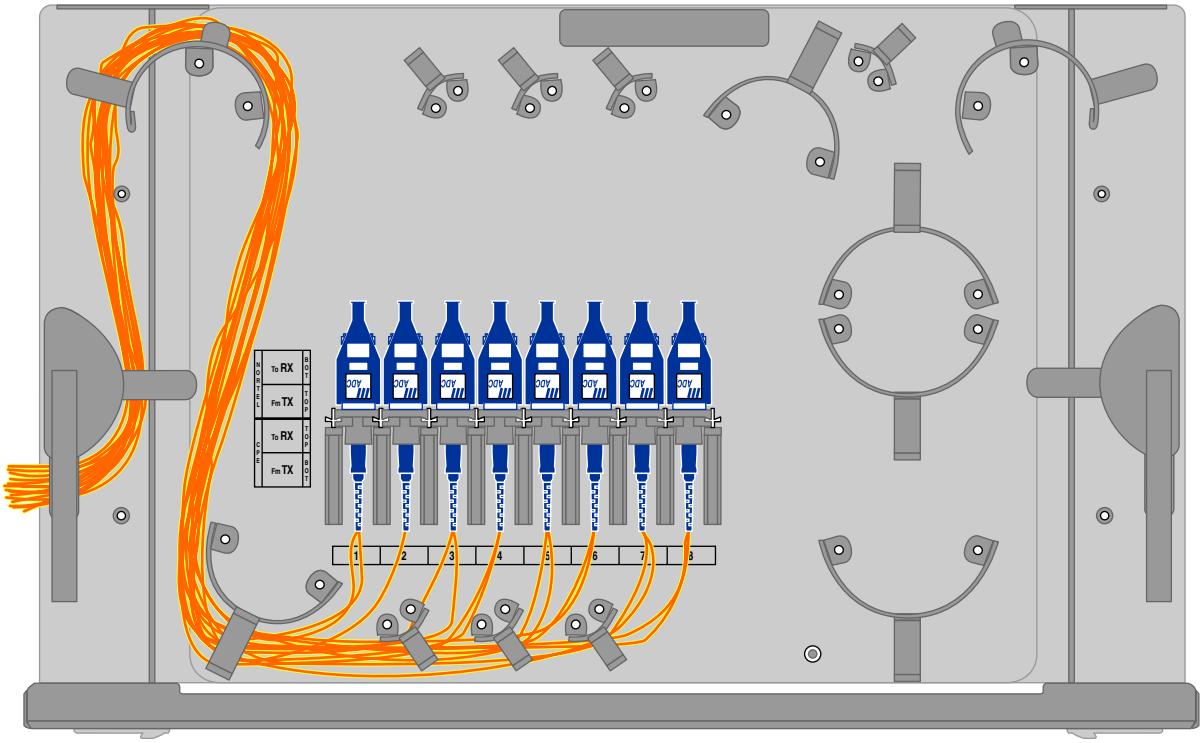

Procedure 3-34
Connecting between Muxponder client interfaces and subtending equipment for bidirectional GbE traffic

Use this procedure to connect fiber patch cords between the Muxponder client interfaces and the subtending equipment when carrying bidirectional GbE traffic.

Requirements

Before you begin this procedure make sure

- the SFP module to be connected to the subtending equipment is installed in the Muxponder circuit pack (and the Muxponder circuit pack is installed in the shelf). For more information on installing a pluggable module, refer to Procedure 7-4, "Installing small form factor pluggable modules" from the *Installing Optical Metro 5200 shelves and components*, 323-1701-201 book.
- all client interface connectors are clean. For information on fiber connector and SFP adaptor housing cleaning, refer to Procedure 9-1 "Cleaning SC, LC, or FC-type connectors (simplex or duplex)" and Procedure 9-5 "Cleaning the SFP adapter housing" in *Installing Optical Metro 5200 shelves and components*, 323-1701-201.
- the provisioned protocol on the subtending equipment and Muxponder must match. See "Supported optical protocols" on page 2-121 in *Technical Specifications,* 323-1701-180.
- your network planning group has provided you with information regarding attenuator requirements to allow the subtending equipment and the Muxponder circuit pack inter work properly. See Table 2-43 for 850 nm SFP and 1310 nm SFP optical transceivers specifications in *Technical Specifications,* 323-1701-180.
- Use the Fiber Manager, as required for slack fiber management. See Procedure 8-3 "Guidelines for routing fiber in the Fiber Manager" in *Installing Optical Metro 5200 Shelves and Components*, 323-0701-201.

Table 3-84 lists the tools and materials recommended to complete this procedure.

—continued—

Procedure 3-34 (continued)
Connecting between Muxponder client interfaces and subtending equipment for bidirectional GbE traffic

Table 3-84
Tools and materials required to complete the procedure

Item	Quantity	Supplied
Antistatic strap	1	no
Optical fiber cleaning kit	1	no
Fiber inspection scope	1	no
LC to SC duplex fiber patch cords to connect the circuit pack (LC) to the patch panel or subtending equipment (SC). — Multi-mode fiber (MMF) needed for 850nm client interfaces (NT0H4319 or NT0H39AA). — Single mode fiber (SMF) needed for 1310nm client interfaces (NT0H4320 or NT0H39AB). ***Note 1:*** All of these patch cords have LC pigtail diameters of 1.6 mm. NT0H4319 and NT0H4320 have an 3.1 m overall length. NT0H439AA and NT0H39AB have an overall length of 2.4 m. ***Note 2:*** Use patch cords NT0H4319 and NT0H4320 with patch panel NT0H43CA. Use patch cords NT0H439AA and NT0H39AB with patch panel NT0H43CB.	1 duplex patch cord for each SFP port used (up to 10)	no, need to be ordered from Nortel.
SC to SC fiber patch cords to connect the subtending equipment to the patch panel	1 pair of patch cords for each SFP port used that are not co-located with subtending equipment (using patch panel)	no
Optical Metro 5100/5200 patch panel (NT0H43CA or NT0H43CB)	0, 1 or 2, depending on the distance to the subtending equipment and the quantity of SFP ports used	no, need to be ordered from Nortel.
Optical power meter (OPM) with an SC and a LC Fiber-Optic Adapter	1	no
Attenuators (SC type connectors)	a set of different attenuator values is recommended	no
Short pieces of Velcro (for fiber routing)	at least 2	no
Universal Fiber Tool	1	yes, provided with the Muxponder

—continued—

Procedure 3-34 (continued)
Connecting between Muxponder client interfaces and subtending equipment for bidirectional GbE traffic

Precautions

DANGER
Invisible laser radiation
The Optical Metro 5100/5200 operates up to a Hazard Level of k x 3A (IEC 60825-2:2000) or 1M (IEC 60825-2:2004). Use only viewing instruments with proper optical attenuation.

CAUTION
Risk of equipment damage
If optical power exceeds the maximum client side input power (Rx) of the Muxponder circuit pack, damage to the optical receiver can result.

CAUTION
Possible risk of damage to equipment and fiber
Make sure that the bulkhead connectors are lowered and snapped into place before you close the drawers. Failure to do so could cause damage to the connector unit, the fibers attached to the connector unit, or both.

Observe the minimum bend radius of 1.18 inches (30mm) for the patch cords. Always use the fiber management components in the drawer to route the fiber.

Allow for sufficient slack in the fibers that enter and exit the drawers. If sufficient slack is not left, the fibers can become stretched and damaged when the drawer is opened.

CAUTION
Risk of affecting traffic on adjacent SFP modules
If you are performing this procedure when other SFP modules are carrying traffic, use the universal fiber tool to avoid disturbing the fibers connected to the traffic-carrying SFP ports.

—continued—

Procedure 3-34 (continued)
Connecting between Muxponder client interfaces and subtending equipment for bidirectional GbE traffic

Action

Step	Action

1 Select the SFP port on the Muxponder circuit pack that needs to be fibered to the subtending equipment.

2 Determine the required task:

If the selected SFP port is an	**Then** go to
odd port	the next step
even port	step 8

Arranging the duplex LC 45 degree boot on the patch cord for the odd SFP ports

3 Obtain the duplex SC-LC patch cord that you will use to connect the subtending equipment to the SFP client interface ports.

Note: Use an NT0H4320 or NT0H39AB SMF patch cord for 1310 nm. Use an NT0H4319 or NT0H39AA MMF patch cord for 850 nm. The NT0H4319 MMF path cord is illustrated in Figure 3-45 on page 3-251.

4 Take the duplex LC end connectors of the patch cord as illustrated in Figure 3-46 on page 3-251 (for the NT0H4319 MMF patch cord). Pay attention to the location of the white and black fiber coatings, as well as the position of the red 45 degree plastic boot.

5 Rotate the red 45 degree plastic boot on the LC fiber with black coating as illustrated in Figure 3-47 on page 3-252 (for the NT0H4319 MMF patch cord).

6 Rotate the red 45 degree plastic boot on the LC fiber with white coating as illustrated in Figure 3-48 on page 3-252 (for the NT0H4319 MMF patch cord).

7 This duplex SC-LC patch cord is now prepared for the connection to the odd SFP ports on the Muxponder circuit pack. Continue with the next step.

Determining if a patch panel is required

8 For the selected SFP port, determine the required task:

If the shelf housing the Muxponder circuit pack is	**Then** go to
co-located with the client subtending equipment (3.1 meters fiber patch cords are sufficient to connect the selected SFP port to the subtending equipment)	step 9
not co-located with the client subtending equipment (3.1 meters fiber patch cords are **not** sufficient to connect the selected SFP port to the subtending equipment)	step 30

—continued—

Procedure 3-34 (continued)
Connecting between Muxponder client interfaces and subtending equipment for bidirectional GbE traffic

Step	Action

Connecting fibers between the SFP port directly to the subtending equipment

9 In the following steps, you will be making these 2 fiber connections:

From the selected # SFP module on the Muxponder circuit pack	To subtending equipment
RX #	TX
TX #	RX
Note: In these steps, we assume that the subtending equipment ports use SC connectors.	

10 Using a test patch cord that you know is error free, measure the Tx signal strength of the subtending equipment that you want to connect to the Rx port of the SFP module on the Muxponder circuit pack.

11 Make sure that the signal strength is within the Tx specifications of the subtending equipment. Disconnect the test patch cord.

Note: If the signal strength is not within the Tx specifications of the subtending equipment (contact your network administrator for the required values), clean the optical connectors or replace the subtending equipment circuit pack. For information on cleaning, see the Procedure 9-1 "Cleaning SC, LC, or FC-type connectors (simplex or duplex)" in *Installing Optical Metro 5200 Shelves and Components*, 323-1701-201.

12 Take the duplex SC-LC patch cord that you will use to connect the subtending equipment to the SFP client interface ports.

Note: Use an NT0H4320 or NT0H39AB SMF patch cord for 1310 nm. Use an NT0H4319 or NT0H39AA MMF patch cord for 850 nm.

Connect one of SC connectors of the patch cord to the Tx port of the subtending equipment. Make sure that the connector is clean before connecting the fiber.

Note: Leave the second SC connector, unconnected. The second SC connector will be connected to the subtending equipment Rx port later on in this procedure.

13 Measure and record the strength of the Tx signal at the end of the patch cord that will connect to the Rx port of the selected SFP module on the Muxponder circuit pack.

14 Compare the recorded Rx client power with the SFP optical transceivers specifications for either 850 nm or 1310 nm (refer to Table 2-43 in *Technical Specifications*, 323-1701-180).

—continued—

Procedure 3-34 (continued)
Connecting between Muxponder client interfaces and subtending equipment for bidirectional GbE traffic

Step	Action
15	Determine the required task:

If the recorded Rx client power on the Rx port of the SFP module is	**Then**
within margins	go to step 19
too high	it requires attenuation. Go to step 16
too low	stop this procedure and contact your next level of support.

16 Choose the proper fixed pad attenuator to be within the SFP Rx client power margins. Clean the attenuator and insert it at the SC end of the duplex SC-LC optical patch cord that will connect to the Rx port of the selected SFP module in the Muxponder circuit pack. In order to insert the attenuator at the Tx port of the subtending equipment, you will need to disconnect the fiber, insert the attenuator, and reconnect the fiber at that end.

17 Measure and record the SFP Rx client signal strength to verify that the attenuator is working correctly.

18 Make sure that the recorded signal strength is within the Rx specifications for the type of SFP module you are using (850 nm or 1310 nm) (refer to Table 2-43 in *Technical Specifications*, 323-1701-180).

Note: If the signal strength is not within the Rx specifications, clean the optical connectors again or replace the patch cords. If this does not help, call your next level of support. For information on cleaning, see Procedure 9-1 “Cleaning SC, LC, or FC-type connectors (simplex or duplex)” and Procedure 9-5 “Cleaning the SFP adapter housing” in *Installing Optical Metro 5200 Shelves and Components*, 323-1701-201.

19 Route the duplex SC-LC optical patch cord from the subtending equipment to SFP.

20 Make sure that the duplex LC connectors are clean, and then connect them to the client interface ports on the SFP module. To connect the duplex LC fiber, use the universal fiber tool provided with the Muxponder circuit pack.

Note: For information on cleaning, see Procedure 9-1 “Cleaning SC, LC, or FC-type connectors (simplex or duplex)” and Procedure 9-5 “Cleaning the SFP adapter housing” in *Installing Optical Metro 5200 Shelves and Components*, 323-1701-201.

At this point in the procedure, the Client LOS lamp will turn off if optical power is present at the SFP Rx port.

—continued—

Procedure 3-34 (continued)
Connecting between Muxponder client interfaces and subtending equipment for bidirectional GbE traffic

Step	Action	
21	Determine the required task:	
	If the Muxponder circuit pack Line side	**Then**
	is fibered and carrying error free traffic, it means that the SFP client side Tx laser should be active and sending a signal in the patch cord	go to step 22
	is not fibered or not carrying error free traffic, it means that the SFP client side Tx laser is turned off	contact your network planning group to know if there is a need to attenuate the SFP Tx signal going into the subtending equipment Rx port and then go to step 25. ***Note:*** If this is a new installation, one way to test the client Tx output power is to do a line fiber loopback with a 10 dB attenuator.
22	Measure and record the strength of the Tx signal at the SC end of the duplex SC-LC patch cord that will connect to the Rx port of the subtending equipment.	
23	Compare the recorded Rx client power with the subtending equipment receivers specifications provided by your network planning group.	
24	Determine the required task:	
	If the recorded Rx client power on the Tx port of the SFP module	**Then**
	is within margins	go to step 26
	is too high	it requires attenuation. Go to step 25.
	is too low	stop this procedure and contact your next level of support.
25	Choose the proper fixed pad attenuator to be within the subtending equipment Rx power margins. Clean the attenuator and connect it to the end of the optical patch cord that will connect to the Rx port of the subtending equipment.	
26	If it is possible (if the SFP Tx laser is turned on), measure and record the SFP Tx client signal strength with the attenuator in place (if an attenuator was selected), to verify that the attenuator is working correctly. If the SFP Tx laser is off, go to step 28.	

—continued—

Procedure 3-34 (continued)
Connecting between Muxponder client interfaces and subtending equipment for bidirectional GbE traffic

Step	Action
27	Make sure that the recorded signal strength is within the Rx specifications for the subtending equipment. ***Note:*** If the signal strength is not within the Rx specifications, clean the optical connectors again or replace the patch cords. If this does not help, call your next level of support. For information on cleaning, see Procedure 9-1 "Cleaning SC, LC, or FC-type connectors (simplex or duplex)" and Procedure 9-5 "Cleaning the SFP adapter housing" in *Installing Optical Metro 5200 Shelves and Components*, 323-1701-201.
28	Connect the remaining SC connector of the duplex fiber to the Rx port of the subtending equipment. Make sure that the attenuator is in place (if there was a need for an attenuator), and that the optical connector is clean. ***Note:*** For information on cleaning, see Procedure 9-1 "Cleaning SC, LC, or FC-type connectors (simplex or duplex)" in *Installing Optical Metro 5200 Shelves and Components*, 323-1701-201.
29	If there is another SFP port that needs to be fibered to the subtending equipment go back to step 1.

Connecting fibers between the SFP port to the subtending equipment through a patch panel

30	Ensure you are familiar with how to access connectors in an NT0H43CA or NT0H43CB patch panel. See Procedure 1-16, "Accessing connectors in a patch panel" in part 1 of this document.
31	Ensure you have the required number of patch panels installed in the equipment rack or cabinet. One 16-port patch panel (NT0H43CA) can accommodate upto 8 ports on the Muxponder circuit pack. The 20-port patch panel (NT0H43CB) can accommodate all 10 ports on the Muxponder circuit pack. Each SFP port on the Muxponder circuit pack that is not co-located with it's client subtending equipment needs to be fibered going through a NT0H43CA or NT0H43CB patch panel.
32	In the next steps, you will be performing the following fiber connections:

Subtending equipment port label	**Patch panel port label** coming from the front of the module	**Patch panel port label** coming from the back of the module	**SFP label for the selected # SFP port**
RX	CPE To RX	NORTEL Fm TX	TX #
TX	CPE Fm TX	NORTEL To RX	RX #
Note: In these steps, we assume that the subtending equipment ports use SC connectors.			

—continued—

Procedure 3-34 (continued)
Connecting between Muxponder client interfaces and subtending equipment for bidirectional GbE traffic

Step	Action
33	Open and fully extend the drawer of the NT0H43CA or NT0H43CB patch panel.
34	Using a test fiber patch cord that you know is error free, measure the Tx signal strength of the subtending equipment that you want to connect to the patch panel port labeled “CPE Fm TX”.
35	Make sure that the signal strength is within the Tx specifications of the subtending equipment. Then you can disconnect the test patch cord. ***Note:*** If the signal strength is not within the Tx specifications, clean the optical connectors or replace the subtending equipment circuit pack. For information on cleaning, see Procedure 9-1 “Cleaning SC, LC, or FC-type connectors (simplex or duplex)” in *Installing Optical Metro 5200 Shelves and Components*, 323-1701-201.
36	Clean and connect the patch cord that you will use to interconnect the Tx signal of the subtending equipment to the patch panel port labeled “CPE Fm TX” to the Tx port of the subtending equipment.
37	Connect the other end of the patch cord to the patch panel port labeled “CPE Fm TX” routing the patch cord through the patch panel as shown in Figure 3-34 on page 3-205.
38	Using a SC-SC fiber patch cord that you know is error free, connect one end to the patch panel port labeled “NORTEL To RX“. Measure and record the optical power going out of that patch cord.
39	Compare the recorded power with the SFP Rx client optical transceivers specifications for either 850 nm or 1310 nm (refer to Table 2-43 in *Technical Specifications,* 323-1701-180).
40	Determine the required task: **If** the recorded power going to the SFP Rx port — **Then** is within margins — go to step 42 is too high — it requires attenuation. Go to step 41. is too low — stop this procedure and contact your next level of support.
41	Choose the proper fixed pad attenuator (SC type connector) to be within the SFP Rx client power margins.

—continued—

Procedure 3-34 (continued)
Connecting between Muxponder client interfaces and subtending equipment for bidirectional GbE traffic

Step	Action
42	Take the duplex SC-LC patch cord that you will use to connect the patch panel to the SFP client interface ports. ***Note:*** Use an NT0H4320 or NT0H39AB SMF patch cord for 1310 nm. Use an NT0H4319 or NT0H39AA MMF patch cord for 850 nm. If an attenuator was selected in the previous step, connect it to one of the two SC end connectors from the duplex patch cord. Then connect this end to the patch panel port labeled “NORTEL to RX”. Make sure that the connector is clean before connecting the fiber. ***Note:*** Leave the second SC connector, unconnected. The second SC connector will be connected to the subtending equipment Rx port later on in this procedure.
43	Route the patch cord through the patch panel as shown in Figure 3-32 on page 3-204 and Figure 3-33 on page 3-204.
44	Measure and record the SFP Rx client signal strength to verify that the attenuator is working correctly. Use a power meter with LC fiber-optic adaptor.
45	Make sure that the recorded signal strength is within the Rx specifications for the type of SFP module you are using (850 nm or 1310 nm) (refer to Table 2-43 in *Technical Specifications*, 323-1701-180). ***Note:*** If the signal strength is not within the Rx specifications, clean the optical connectors or replace the patch cords. If this does not help, call your next level of support. For information on cleaning, see the Procedure 9-1 “Cleaning SC, LC, or FC-type connectors (simplex or duplex)” in *Installing Optical Metro 5200 Shelves and Components*, 323-1701-201.
46	Route the duplex SC-LC optical patch cord from the patch panel to SFP.
47	Make sure that the duplex LC connectors are clean, and then connect them to the client interface ports on the SFP module. To connect the duplex LC fiber, use the Universal Fiber Tool provided with the Muxponder circuit pack. ***Note:*** For information on cleaning, see Procedure 9-1 “Cleaning SC, LC, or FC-type connectors (simplex or duplex)” and Procedure 9-5 “Cleaning the SFP adapter housing” in *Installing Optical Metro 5200 Shelves and Components*, 323-1701-201. *At this point in the procedure, the Client LOS lamp will turn off if optical power is present at the SFP Rx port.*

—continued—

Procedure 3-34 (continued)
Connecting between Muxponder client interfaces and subtending equipment for bidirectional GbE traffic

Step	Action
48	Determine the required task:

If the Muxponder circuit pack Line side	**Then**
is fibered and carrying error free traffic, it means that the SFP client side Tx laser should be active and sending a signal in the patch cord	go to step 49
is not fibered or not carrying error free traffic, it means that the SFP client side Tx laser is turned off	contact your network planning group to know if there is a need to attenuate the SFP Tx signal going into the patch panel and then go to step 53. ***Note:*** If this is a new installation, one way to test the client Tx output power is to do a line fiber loop back with a 10 dB attenuator.

49	Measure and record the strength of the Tx signal at the end of the duplex SC-LC patch cord that will connect to the patch panel port labeled “NORTEL Fm TX“.
50	Make sure that the recorded signal strength is within the Tx specifications for the type of SFP module you are using (850nm or 1310nm) (refer to Table 2-43 in *Technical Specifications,* 323-1701-180). ***Note:*** If the signal strength is not within the Tx specifications, clean again the optical connectors or replace the patch cords. If this does not help, call your next level of support. For information on cleaning, see Procedure 9-1 “Cleaning SC, LC, or FC-type connectors (simplex or duplex)” and Procedure 9-5 “Cleaning the SFP adapter housing” in *Installing Optical Metro 5200 Shelves and Components*, 323-1701-201.
51	Compare the recorded power with the subtending equipment receivers specifications provided by your network planning group.
52	Determine the required task:

If the recorded Rx client power on the Tx port of the SFP module	**Then**
is within margins	go to step 56
is too high	it requires attenuation. Go to step 53.
is too low	stop this procedure and contact your next level of support.

—continued—

Procedure 3-34 (continued)
Connecting between Muxponder client interfaces and subtending equipment for bidirectional GbE traffic

Step	Action
53	Choose the proper fixed pad attenuator to be within the subtending equipment Rx power margins. Clean the attenuator and connect it to the end of the optical patch cord that will connect to the Rx port of the subtending equipment.
54	If it is possible (if the SFP Tx laser is turned on), measure and record the SFP Tx client signal strength with the attenuator in place (if an attenuator was selected), to verify that the attenuator is working correctly. If the SFP Tx laser is off, go to step 56.
55	Make sure that the recorded signal strength is within the Rx specifications for the subtending equipment. ***Note:*** If the signal strength is not within the Rx specifications, clean the optical connectors or replace the patch cords. If this does not help, call your next level of support. For information on cleaning, see Procedure 9-1 "Cleaning SC, LC, or FC-type connectors (simplex or duplex)" and Procedure 9-5 "Cleaning the SFP adapter housing" in *Installing Optical Metro 5200 Shelves and Components*, 323-1701-201.
56	Connect the remaining SC connector of the duplex fiber to the patch panel port labeled "NORTEL Fm TX". Make sure that the attenuator is in place (if there was a need for an attenuator), and that the optical connector is clean. ***Note:*** For information on cleaning, see Procedure 9-1 "Cleaning SC, LC, or FC-type connectors (simplex or duplex)" in *Installing Optical Metro 5200 Shelves and Components*, 323-1701-201.
57	Take the SC-SC fiber patch cord that will connect the Rx port of the subtending equipment to the "CPE To RX" port of the patch panel.
58	Connect one end to that patch cord to the patch panel port labeled "CPE To RX". If a power was recorded in step 54, measure again and record the optical power going out of that patch cord. If the power is not similar to what was recorded in step 54, clean again the fiber or take another one. If no power was recorded in step 54, skip this step. ***Note:*** For information on cleaning, see Procedure 9-1 "Cleaning SC, LC, or FC-type connectors (simplex or duplex)" in *Installing Optical Metro 5200 Shelves and Components*, 323-1701-201.
59	Clean and connect the remaining end of the patch cord to the RX port on the subtending equipment.
60	Close the patch panel drawer.
61	If there is another SFP port that needs to be fibered to the subtending equipment go back to step 1.

—end—

Figure 3-45
Duplex NT0H4319 MMF cable for 850nm client interfaces

om2638p

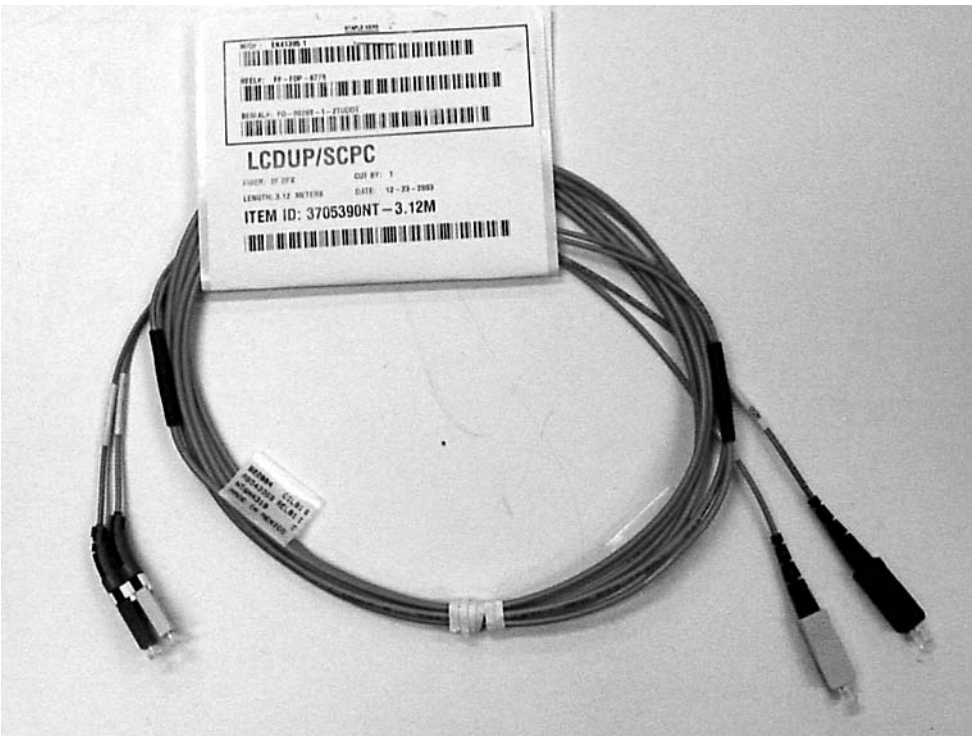

Figure 3-46
Duplex LC end connectors on a NT0H4319 MMF patch cable

om2639p

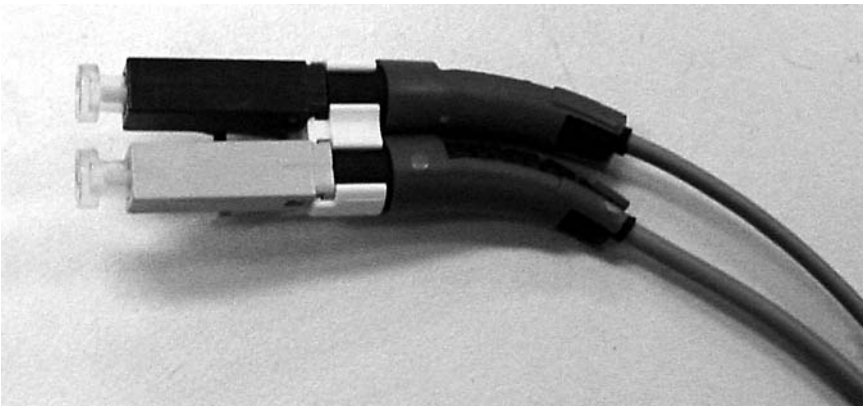

Figure 3-47
Rotation of the red 45 degree plastic boot on the black connector of the duplex LC NT0H4319 MMF patch cable

om2340p

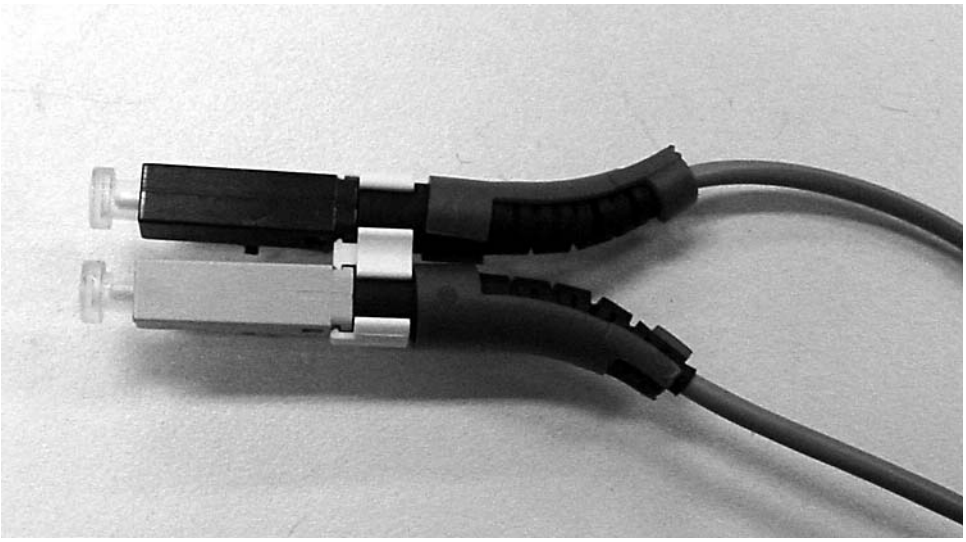

Figure 3-48
Rotation of the red 45 degree plastic boot on the white connector of the duplex LC NT0H4319 MMF patch cable

om2341p

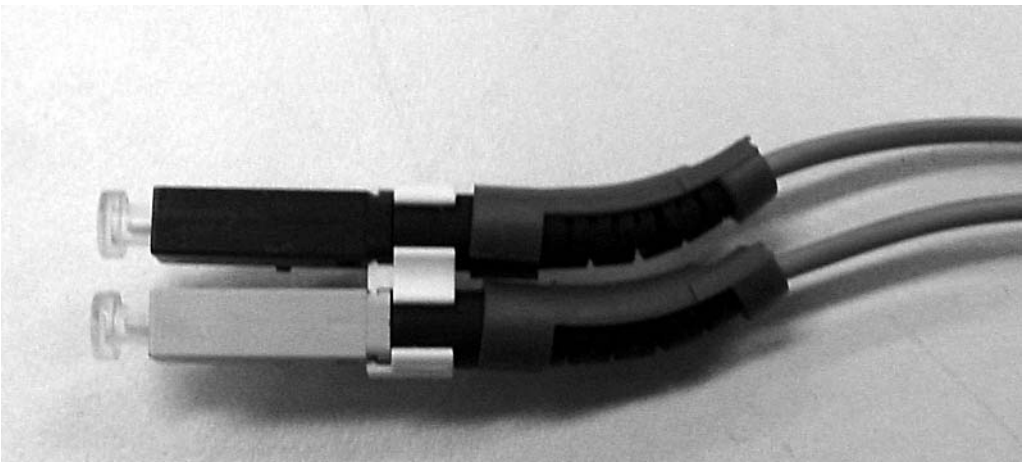

Procedure 3-35
Connecting between Muxponder client interfaces and subtending equipment for unidirectional GbE traffic

Use this procedure to connect fiber patch cords between the Muxponder client interfaces (SFP) and the subtending equipment when carrying unidirectional GbE traffic.

ATTENTION

To carry unidirectional Gigabit Ethernet traffic, it is possible that the subtending equipment at the near-end requires a valid Gigabit Ethernet signal at it's receive port. Should this be the case, you need to use an optical 50/50 splitter to basically feed a portion of the near-end subtending equipment's transmit signal back to the receive port as illustrated in Figure 3-49 on page 3-253.

If you don't have an optical splitter, you can use the multimode four-channel Transponder Protection Tray version (NT0H59BA) for 850 nm operation or the single mode four-channel Transponder Protection Tray version (NT0H59AA) for 1310 nm operation.

Figure 3-49
Unidirectional traffic support at near-end

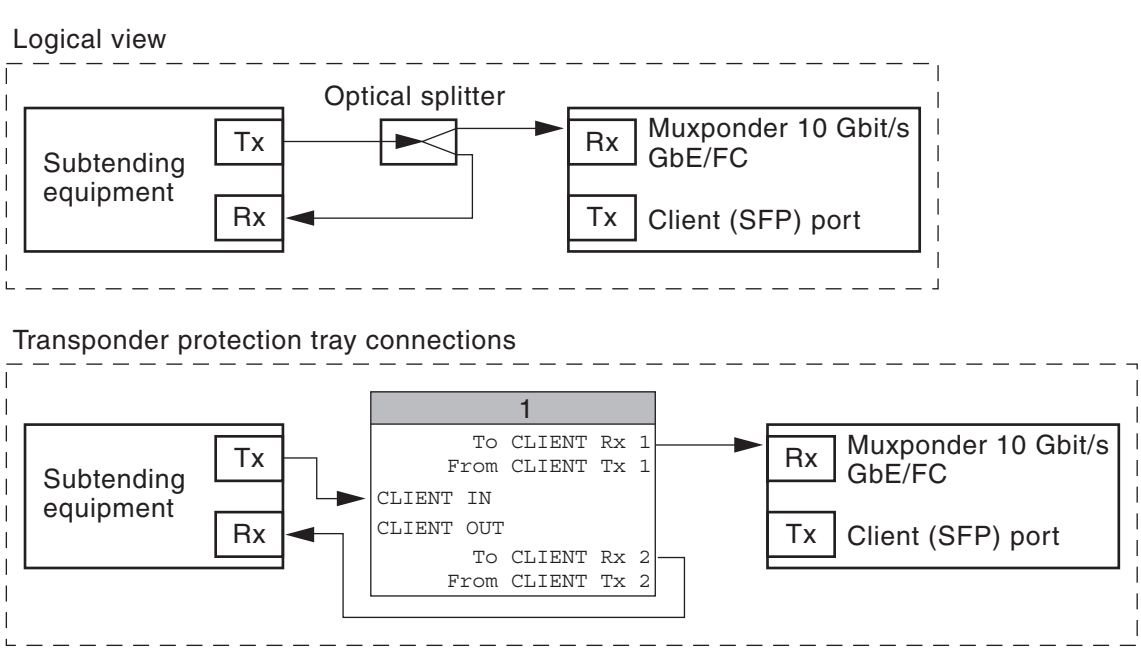

—continued—

Procedure 3-35 (continued)
Connecting between Muxponder client interfaces and subtending equipment for unidirectional GbE traffic

Requirements

Before you begin this procedure make sure

- the SFP module to be connected at the near end and the far end sites are installed in the Muxponder 10 Gbit/s GbE/FC VCAT circuit pack in any of ports 1 to 10 (and the Muxponder 10 Gbit/s GbE/FC VCAT circuit pack is installed in the shelf). For more information on installing a pluggable module, refer to Procedure 7-4, "Installing small form factor pluggable modules" from the *Installing Optical Metro 5200 shelves and components*, 323-1701-201.
- the SFP module to be connected at the near end and the far end sites are installed in the Muxponder 10 Gbit/s GbE/FC circuit pack in any of ports 1 to 8 (and the Muxponder 10 Gbit/s GbE/FC circuit pack is installed in the shelf). For more information on installing a pluggable module, refer to Procedure 7-4, "Installing small form factor pluggable modules" from the *Installing Optical Metro 5200 shelves and components*, 323-1701-201.
- you are familiar with how to access connectors in a Transponder Protection Tray. See Procedure 1-13 "Accessing connectors in a Transponder Protection Tray" in part 1 of this document.
- all client interface connectors are clean. For information on fiber connector cleaning, refer to Procedure 9-1, "Cleaning SC, LC, or FC-type connectors (simplex or duplex)" for information on SFP adaptor housing cleaning, refer to Procedure 9-5 "Cleaning the SFP adapter housing" in *Installing Optical Metro 5200 shelves and components*, 323-1701-201.
- the provisioned protocol on the subtending equipment and Muxponder must match. See "Supported optical protocols" on page 2-121 in *Technical Specifications,* 323-1701-180.
- your network planning group has provided you with information regarding attenuator requirements to allow the subtending equipment and the Muxponder circuit pack inter work properly. See Table 2-43 in *Technical Specifications,* 323-1701-180 for 1310 nm SFP optical transceivers specifications.
- Use the Fiber Manager, as required for slack fiber management. See Procedure 8-3 "Guidelines for routing fiber in the Fiber Manager" in *Installing Optical Metro 5200 Shelves and Components*, 323-0701-201.

Table 3-85 lists the tools and materials recommended to complete this procedure.

—continued—

Procedure 3-35 (continued)
Connecting between Muxponder client interfaces and subtending equipment for unidirectional GbE traffic

Table 3-85
Tools and materials required to complete the procedure

Item	Quantity	Supplied
Antistatic strap	1	no
Optical fiber cleaning kit	1	no
Fiber inspection scope	1	no
LC to SC duplex fiber patch cords to connect the circuit pack (LC) to the TPT. — Multi-mode fiber (MMF) needed for 850nm client interfaces (NT0H4319 or NT0H39AA). — Single mode fiber (SMF) needed for 1310nm client interfaces (NT0H4320 or NT0H39AB). ***Note:*** Both of these patch cords have LC pigtail diameters of 1.6 mm and 3.1 m overall length.	1 duplex patch cord for each SFP port used (up to 10)	no, order from Nortel.
SC to SC fiber patch cords to connect the TPT to the patch panel or to the subtending equipment	at least 1 pair of patch cords for each SFP port used	no
Optical Metro 5100/5200 four-channel Transponder Protection Tray (NT0H59BA for MMF or NT0H59AA for SMF)	varies depending on the number of SFP ports set-up with unidirectional traffic (1 TPT provides support for 4 SFP ports)	no, order from Nortel.
Optical Metro 5100/5200 patch panel (NT0H43CA or NT0H43CB)	0, 1 or 2, depending on the distance to the subtending equipment and the quantity of SFP ports used	no, order from Nortel.
Optical power meter (OPM) with an LC and a LC Fiber-Optic Adapter	1	no
Attenuators (SC type connectors)	a set of different attenuator values is recommended	no
Universal Fiber Tool	1	yes, provided with the Muxponder

—continued—

Procedure 3-35 (continued)
Connecting between Muxponder client interfaces and subtending equipment for unidirectional GbE traffic

Precautions

CAUTION
Risk of damage and personal injury
Make sure that you review the caution and danger warning notices listed in the introduction in this chapter. See Precautions on page 3-2.

CAUTION
Risk of equipment damage
If optical power exceeds the maximum client input power (Rx) of the Muxponder circuit pack, damage to the optical receiver can result.

CAUTION
Possible risk of damage to equipment and fiber
Make sure that the bulkhead connectors are lowered and snapped into place before you close the drawers. Failure to do so could cause damage to the connector unit, the fibers attached to the connector unit, or both.

Observe the minimum bend radius of 1.18 inches (30 mm) for the patch cords. Always use the fiber management components in the drawer to route the fiber.

Allow for sufficient slack in the fibers that enter and exit the drawers. If sufficient slack is not left, the fibers can become stretched and damaged when the drawer is opened.

CAUTION
Risk of affecting traffic on adjacent SFP modules
If you are performing this procedure when other SFP modules are carrying traffic, use the universal fiber tool to avoid disturbing the fibers connected to the traffic-carrying SFP ports.

—continued—

Procedure 3-35 (continued)
Connecting between Muxponder client interfaces and subtending equipment for unidirectional GbE traffic

Action

Step	Action

Near-end site

Note: In this section of the procedure you will be making the fiber connection between the subtending equipment Tx port and the SFP Rx port on the Muxponder circuit pack, at the near-end site. The use of a patch panel as a demarcation point between the subtending equipment and the Muxponder circuit pack maybe be required.

1 Select the SFP port on the Muxponder circuit pack that needs to be fibered to the subtending equipment to carry unidirectional traffic.

2 Determine the required task:

If the selected SFP port is an	**Then** go to
odd port	step 3
even port	step 8

Arranging the duplex LC 45 degree boot on the patch cord for the odd SFP ports

3 Obtain the duplex SC-LC patch cord that you will use to connect the subtending equipment to the SFP client interface ports.

Note: Use an NT0H4320 or NT0H39AB SMF patch cord for 1310 nm. Use an NT0H4319 or NT0H39AA MMF patch cord for 850 nm. The NT0H4319 MMF path cord is illustrated in Figure 3-45 on page 3-251.

4 Take the duplex LC end connectors of the patch cord as illustrated in Figure 3-46 on page 3-251 (for the NT0H4319 MMF patch cord). Pay attention to the location of the white and black fiber coatings, as well as the position of the red 45 degree plastic boot.

5 Rotate the red 45 degree plastic boot on the LC fiber with black coating as illustrated in Figure 3-47 on page 3-252 (for the NT0H4319 MMF patch cord).

6 Rotate the red 45 degree plastic boot on the LC fiber with white coating as illustrated in Figure 3-48 on page 3-252 (for the NT0H4319 MMF patch cord).

7 This duplex SC-LC patch cord is now prepared for the connection to the odd SFP ports on the Muxponder circuit pack. Continue with the next step.

—continued—

Procedure 3-35 (continued)
Connecting between Muxponder client interfaces and subtending equipment for unidirectional GbE traffic

Step	Action

Determine if a patch panel is required

8 For the selected SFP port, determine the required task:

If the shelf housing the Muxponder circuit pack is	**Then** go to
co-located with the client subtending equipment (3.1 meters fiber patch cords are sufficient to connect the selected SFP port to the subtending equipment)	step 9
not co-located with the client subtending equipment (3.1 meters fiber patch cords are not sufficient to connect the selected SFP port to the subtending equipment)	step 24

Connecting fibers between the SFP port directly to the subtending equipment

9 In the following steps, you will be making these 2 fiber connections:

From the selected # SFP module on the Muxponder circuit pack	**To subtending equipment**
RX #	TX
Note: In these steps, we assume that the subtending equipment ports use SC connectors.	

10 Using a test patch cord that you know is error free, measure the Tx signal strength of the subtending equipment that you want to connect to the Rx port of the SFP module on the Muxponder circuit pack.

11 Make sure that the signal strength is within the Tx specifications of the subtending equipment. Disconnect the test patch cord.

Note: If the signal strength is not within the Tx specifications of the subtending equipment (contact your network administrator for the required values), clean the optical connectors or replace the subtending equipment circuit pack. For information on cleaning, see the Procedure 9-1 “Cleaning SC, LC, or FC-type connectors (simplex or duplex)” in *Installing Optical Metro 5200 Shelves and Components*, 323-1701-201.

—continued—

Procedure 3-35 (continued)
Connecting between Muxponder client interfaces and subtending equipment for unidirectional GbE traffic

Step	Action
12	Take the duplex SC-LC patch cord that you will use to connect the subtending equipment to the SFP client interface ports. ***Note:*** Use an NT0H4320 or NT0H39AB SMF patch cord for 1310 nm. Use an NT0H4319 or NT0H39AA MMF patch cord for 850 nm. Connect one of SC connectors of the patch cord to the Tx port of the subtending equipment. Make sure that the connector is clean before connecting the fiber.
13	Put a dust cap on the remaining SC connector since it will not be used.
14	Measure and record the strength of the Tx signal at the end of the patch cord that will connect to the Rx port of the selected SFP module on the Muxponder circuit pack.
15	Compare the recorded Rx client power with the SFP optical transceivers specifications for either 850 nm or 1310 nm (refer to Table 2-43 in *Technical Specifications*, 323-1701-180).
16	Determine the required task:

If the recorded Rx client power on the Rx port of the SFP module	**Then**
is within margins	go to step 20
is too high	it requires attenuation. Go to step 17.
is too low	stop this procedure and contact your next level of support.

17	Choose the proper fixed pad attenuator to be within the SFP Rx client power margins. Clean the attenuator and insert it at the SC end of the duplex SC-LC optical patch cord that will connect to the Rx port of the selected SFP module in the Muxponder circuit pack. In order to insert the attenuator at the Tx port of the subtending equipment, you will need to disconnect the fiber, insert the attenuator, and reconnect the fiber at that end.
18	Measure and record the SFP Rx client signal strength to verify that the attenuator is working correctly.

—continued—

Procedure 3-35 (continued)
Connecting between Muxponder client interfaces and subtending equipment for unidirectional GbE traffic

Step	Action
19	Make sure that the recorded signal strength is within the Rx specifications for the type of SFP module you are using (850 nm or 1310 nm) (refer to Table 2-43 in *Technical Specifications,* 323-1701-180). ***Note:*** If the signal strength is not within the Rx specifications, clean the optical connectors or replace the patch cords. If this does not help, call your next level of support. For information on cleaning, For information on cleaning, see Procedure 9-1 "Cleaning SC, LC, or FC-type connectors (simplex or duplex)" and Procedure 9-5 "Cleaning the SFP adapter housing" in *Installing Optical Metro 5200 Shelves and Components*, 323-1701-201.
20	Route the duplex SC-LC optical patch cord from the subtending equipment to the SFP.
21	Make sure that the duplex LC connectors are clean, and then connect them to the client interface ports on the SFP module. To connect the duplex LC fiber, use the Universal Fiber Tool provided with the Muxponder circuit pack. ***Note:*** For information on cleaning, see Procedure 9-1 "Cleaning SC, LC, or FC-type connectors (simplex or duplex)" and Procedure 9-5 "Cleaning the SFP adapter housing" in *Installing Optical Metro 5200 Shelves and Components*, 323-1701-201. *At this point in the procedure, the Client LOS lamp will turn off if optical power is present at the SFP Rx port.*
22	If an optical splitter is required to supply the near-end subtending equipment's receive port with a valid GbE signal, connect a Transponder Protection Tray (or a 50/50 optical splitter) as illustrated in Figure 3-49 on page 3-253. Otherwise go to the next step.
23	The client side connections at the near end site are completed. Go to step 44 to proceed with the client side connections at the far end site.

Connecting fibers between the SFP port to the subtending equipment through a patch panel

24	Ensure you are familiar with how to access connectors in an NT0H43CA or NT0H43CB patch panel. See Procedure 1-16, "Accessing connectors in a patch panel" in 323-1701-221 document.
25	Ensure you have the required number of patch panels installed in the equipment rack or cabinet. One 16-port patch panel (NT0H43CA) can accommodate upto 8 ports on the Muxponder circuit pack. The 20-port patch panel (NT0H43CB) can accommodate all 10 ports on the Muxponder circuit pack. Each SFP port on the Muxponder circuit pack that is not co-located with it's client subtending equipment needs to be fibered going through a NT0H43CA or NT0H43CB patch panel.

—continued—

Procedure 3-35 (continued)
Connecting between Muxponder client interfaces and subtending equipment for unidirectional GbE traffic

Step	Action
26	In the next steps, you will be performing the following fiber connections:

Subtending equipment port label	**Patch panel port label** (coming from the front of the module)	**Patch panel port label** (coming from the back of the module)	**SFP label for the selected # SFP port**
TX	CPE Fm TX	NORTEL To RX	RX #
Note: In these steps, we assume that the subtending equipment ports use SC connectors.			

27 Open and fully extend the drawer of the NT0H43CA or NT0H43CB patch panel.

28 Using a test fiber patch cord that you know is error free, measure the Tx signal strength of the subtending equipment that you want to connect to the patch panel port labeled “CPE Fm TX”.

29 Make sure that the signal strength is within the Tx specifications of the subtending equipment. Then you can disconnect the test patch cord.

Note: If the signal strength is not within the Tx specifications, clean the optical connectors or replace the subtending equipment circuit pack. For information on cleaning, see the Procedure 9-1 “Cleaning SC, LC, or FC-type connectors (simplex or duplex)” in *Installing Optical Metro 5200 Shelves and Components*, 323-1701-201.

30 Clean and connect the patch cord that you will use to interconnect the Tx signal of the subtending equipment to the patch panel port labeled “CPE Fm TX” to the Tx port of the subtending equipment.

31 Connect the other end of the patch cord to the patch panel port labeled “CPE Fm TX” routing the patch cord through the patch panel as shown in Figure 3-34 on page 3-205.

32 Using a SC-SC fiber patch cord that you know is error free, connect one end to the patch panel port labeled “NORTEL To RX“. Measure and record the optical power going out of that patch cord.

33 Compare the recorded power with the SFP Rx client optical transceivers specifications for either 850 nm or 1310 nm (refer to Table 2-43 in *Technical Specifications*, 323-1701-180).

—continued—

Procedure 3-35 (continued)
Connecting between Muxponder client interfaces and subtending equipment for unidirectional GbE traffic

Step	Action
34	Determine the required task:

If the recorded power going out of the subtending equipment	**Then**
is within margins	go to step 36
is too high	it requires attenuation. Go to step 35.
is too low	stop this procedure and contact your next level of support.

Step	Action
35	Choose the proper fixed pad attenuator (SC type connector) to be within the SFP Rx client power margins.
36	Take the duplex SC-LC patch cord that you will use to connect the patch panel to the SFP client interface ports. ***Note:*** Use an NT0H4320 or NT0H39AB SMF patch cord for 1310 nm. Use an NT0H4319 or NT0H39AA MMF patch cord for 850 nm. If an attenuator was selected in the previous step, connect it to one of the two SC end connectors from the duplex patch cord. Then connect this end to the patch panel port labeled “NORTEL to RX“. Make sure that the connector is clean before connecting the fiber.
37	Put a dust cap on the remaining SC connector since it will not be used.
38	Measure and record the SFP Rx client signal strength to verify that the attenuator is working correctly.
39	Make sure that the recorded signal strength is within the Rx specifications for the type of SFP module you are using (850nm or 1310nm) (refer to Table 2-43 in *Technical Specifications*, 323-1701-180). ***Note:*** If the signal strength is not within the Rx specifications, clean the optical connectors or replace the patch cords. If this does not help, call your next level of support. For information on cleaning, see Procedure 9-1 “Cleaning SC, LC, or FC-type connectors (simplex or duplex)” and Procedure 9-5 “Cleaning the SFP adapter housing” in *Installing Optical Metro 5200 Shelves and Components*, 323-1701-201.
40	Route the duplex SC-LC optical patch cord from the patch panel to SFP.

—continued—

Procedure 3-35 (continued)
Connecting between Muxponder client interfaces and subtending equipment for unidirectional GbE traffic

Step	Action
41	Make sure that the duplex LC connectors are clean, and then connect them to the client interface ports on the SFP module. To connect the duplex LC fiber, use the Universal Fiber Tool provided with the Muxponder circuit pack. ***Note:*** For information on cleaning, see Procedure 9-1 "Cleaning SC, LC, or FC-type connectors (simplex or duplex)" and Procedure 9-5 "Cleaning the SFP adapter housing" in *Installing Optical Metro 5200 Shelves and Components*, 323-1701-201. *At this point in the procedure, the Client LOS lamp will turn off if optical power is present at the SFP Rx port.*
42	Close the patch panel drawer.
43	The client side connections at the near end site are completed. Go to the next step to proceed with the client side connections at the far end site.

Far-end site

Note: In this section of the procedure, we will be making the fiber connections between the SFP port on the Muxponder circuit pack and the subtending equipment at the far-end site.

44 Select the SFP port on the Muxponder circuit pack that needs to be fibered to the subtending equipment to carry unidirectional traffic.

45 Determine the required task:

If the selected SFP port is an	**Then** go to
odd port	step 46
even port	step 51

Arranging the duplex LC 45 degree boot on the patch cord for the odd SFP ports

46 Obtain the duplex SC-LC patch cord that you will use to connect the subtending equipment to the SFP client interface ports.

Note: Use an NT0H4320 or NT0H39AB SMF patch cord for 1310 nm. Use an NT0H4319 or NT0H39AA MMF patch cord for 850 nm. The NT0H4319 MMF path cord is illustrated in Figure 3-45 on page 3-251.

47 Take the duplex LC end connectors of the patch cord as illustrated in Figure 3-46 on page 3-251 (for the NT0H4319 MMF patch cord). Pay attention to the location of the white and black fiber coatings, as well as the position of the red 45 degree plastic boot.

48 Rotate the red 45 degree plastic boot on the LC fiber with black coating as illustrated in Figure 3-47 on page 3-252 (for the NT0H4319 MMF patch cord).

49 Rotate the red 45 degree plastic boot on the LC fiber with white coating as illustrated in Figure 3-48 on page 3-252 (for the NT0H4319 MMF patch cord).

—continued—

Procedure 3-35 (continued)
Connecting between Muxponder client interfaces and subtending equipment for unidirectional GbE traffic

Step	Action
50	This duplex SC-LC patch cord is now prepared for the connection to the odd SFP ports on the Muxponder circuit pack. Continue with the next step.

Connecting fibers between the SFP port to the subtending equipment through a patch panel

51 For the selected SFP port, determine the required task:

If the shelf housing the Muxponder circuit pack is	**Then** go to
co-located with the client subtending equipment (3.1 meters fiber patch cords are sufficient to connect the selected SFP port to the subtending equipment)	step 52
not co-located with the client subtending equipment (3.1 meters fiber patch cords are not sufficient to connect the selected SFP port to the subtending equipment)	step 65

Connecting fibers between the SFP port directly to the subtending equipment

52 In the following steps, you will be making the following single connection:

From the selected # SFP module on the Muxponder circuit pack	**To subtending equipment**
TX #	RX
Note: In these steps, we assume that the subtending equipment ports use SC connectors.	

53 Using a test patch cord that you know is error free, measure the Tx signal strength of the Muxponder circuit pack that you want to connect to the Rx port of the subtending equipment.

54 Make sure that the signal strength is within the Tx specifications of the Muxponder circuit pack. Then you can disconnect the test patch cord.

Note: If the signal strength is not within the Tx specifications of the Muxponder circuit pack (contact your network administrator for the required values), clean the optical connectors or replace the Muxponder circuit pack. For information on cleaning, see the Procedure 9-1 “Cleaning SC, LC, or FC-type connectors (simplex or duplex)” in *Installing Optical Metro 5200 Shelves and Components*, 323-1701-201.

—continued—

Procedure 3-35 (continued)
Connecting between Muxponder client interfaces and subtending equipment for unidirectional GbE traffic

Step	Action
55	Take the duplex SC-LC patch cord that you will use to connect the SFP client interface ports to the subtending equipment. ***Note:*** Use an NT0H4320 or NT0H39AB SMF patch cord for 1310 nm. Use an NT0H4319 or NT0H39AA MMF patch cord for 850 nm. Ensure that the duplex LC connectors are clean and connect them to the client interface ports on the SFP module. To connect the duplex LC fiber, use the Universal Fiber Tool provided with the Muxponder circuit pack. ***Note:*** For information on cleaning, see Procedure 9-1 "Cleaning SC, LC, or FC-type connectors (simplex or duplex)" and Procedure 9-5 "Cleaning the SFP adapter housing" in *Installing Optical Metro 5200 Shelves and Components*, 323-1701-201.
56	Measure and record the strength of the Tx signal at the SC end of the patch cord that will connect to the Rx port of the subtending equipment.
57	Compare the recorded power with the subtending equipment receivers specifications provided by your network planning group.
58	Determine the required task:

If the recorded Rx power on the Rx port of the subtending equipment	**Then**
is within margins	go to step 62
is too high	it requires attenuation. Go to step 59.
is too low	stop this procedure and contact your next level of support.

59	Choose the proper fixed pad attenuator to be within the subtending equipment Rx power margins. Clean the attenuator and insert it at the SC end of the duplex SC-LC optical patch cord that will connect to the Rx port of the subtending equipment.
60	Measure and record the subtending equipment Rx signal strength to verify that the attenuator is working correctly.
61	Make sure that the recorded signal strength is within the Rx specifications of the subtending equipment. ***Note:*** If the signal strength is not within the Rx specifications, clean the optical connectors or replace the patch cords. If this does not help, call your next level of support. For information on cleaning, For information on cleaning, see Procedure 9-1 "Cleaning SC, LC, or FC-type connectors (simplex or duplex)" and Procedure 9-5 "Cleaning the SFP adapter housing" in *Installing Optical Metro 5200 Shelves and Components*, 323-1701-201.

—continued—

Procedure 3-35 (continued)
Connecting between Muxponder client interfaces and subtending equipment for unidirectional GbE traffic

Step	Action
62	Route the duplex SC-LC optical patch cord from SFP to the subtending equipment.
63	Ensure the appropriate SC connector which needs to be connected to the subtending equipment Rx is clean and then connect it.
64	Put a dust cap on the remaining SC connector since it will not be used. This procedure is completed. You have fibered the subtending equipment to the SFP client interface ports for the unidirectional GbE traffic link, at both the near end and the far end sites.

Connecting fibers between the SFP port to the subtending equipment through a patch panel

65 Ensure you are familiar with how to access connectors in an NT0H43CA or NT0H43CB patch panel. See Procedure 1-14, "Accessing connectors in a patch panel" in part 1 of this document.

66 Ensure you have the required number of patch panels installed in the equipment rack or cabinet. One 16-port patch panel (NT0H43CA) can accommodate upto 8 ports on the Muxponder circuit pack. The 20-port patch panel (NT0H43CB) can accommodate all 10 ports on the Muxponder circuit pack. Each SFP port on the Muxponder circuit pack that is not co-located with it's client subtending equipment needs to be fibered going through a NT0H43CA or NT0H43CB patch panel.

67 In the next steps, you will be performing the following fiber connections:

SFP label for the selected # SFP port	**Patch panel port label** (coming from the back of the module)	**Patch panel port label** (coming from the front of the module)	**Subtending equipment port label**
TX #	NORTEL Fm TX	CPE To RX	RX
Note: In these steps, we assume that the subtending equipment ports use SC connectors.			

—continued—

Procedure 3-35 (continued)
Connecting between Muxponder client interfaces and subtending equipment for unidirectional GbE traffic

Step	Action
68	Open and fully extend the drawer of the NT0H43CA or NT0H43CB patch panel.
69	Using a test patch cord that you know is error free, measure the Tx signal strength of the Muxponder circuit pack that you want to connect to the Rx port of the subtending equipment.
70	Make sure that the signal strength is within the Tx specifications of the Muxponder circuit pack. Then you can disconnect the test patch cord. ***Note:*** If the signal strength is not within the Tx specifications of the Muxponder circuit pack (contact your network administrator for the required values), clean the optical connectors or replace the Muxponder circuit pack. For information on cleaning, see the Procedure 9-1 "Cleaning SC, LC, or FC-type connectors (simplex or duplex)" in *Installing Optical Metro 5200 Shelves and Components*, 323-1701-201.
71	Take the duplex SC-LC patch cord that you will use to connect the SFP client interface ports to the patch panel. ***Note:*** Use an NT0H4320 or NT0H39AB SMF patch cord for 1310 nm. Use an NT0H4319 or NT0H39AA MMF patch cord for 850 nm. Ensure that the duplex LC connectors are clean and connect them to the client interface ports on the SFP module. To connect the duplex LC fiber, use the Universal Fiber Tool provided with the Muxponder circuit pack. ***Note:*** For information on cleaning, see Procedure 9-1 "Cleaning SC, LC, or FC-type connectors (simplex or duplex)" and Procedure 9-5 "Cleaning the SFP adapter housing" in *Installing Optical Metro 5200 Shelves and Components*, 323-1701-201.
72	Connect the other end of the patch cord's SC-end to the patch panel port labeled "NORTEL Fm TX" routing the patch cord through the patch panel as shown in Figure 3-34 on page 3-205.
73	Put a dust cap on the remaining SC connector since it will not be used.
74	Using an SC-SC test fiber patch cord that you know is error free, connect one end to the patch panel port labeled "CPE To RX". Measure and record the strength of the Tx signal at the patch panel that will connect to the Rx port of the subtending equipment.
75	Compare the recorded power with the subtending equipment receivers specifications provided by your network planning group.

—continued—

Procedure 3-35 (continued)
Connecting between Muxponder client interfaces and subtending equipment for unidirectional GbE traffic

Step	Action
76	Determine the required task:

If the recorded power going to the subtending equipment's receiver	**Then**
is within margins	go to step 80
is too high	it requires attenuation. Go to step 77.
is too low	stop this procedure and contact your next level of support

77	Choose the proper fixed pad attenuator (SC type connector) to be within the subtending equipment Rx power margins. Clean the attenuator and connect it to the end of the optical patch cord that will connect to the Rx port of the subtending equipment (or patch panel port labeled "CPE To RX').
78	Measure and record the subtending equipment Rx signal strength to verify that the attenuator is working correctly.
79	Ensure that the recorded signal strength is within the subtending equipment Rx specifications ***Note:*** If the signal strength is not within the Rx specifications, clean the optical connectors or replace the patch cords. If this does not help, call your next level of support. For information on cleaning, see Procedure 9-1 "Cleaning SC, LC, or FC-type connectors (simplex or duplex)" in *Installing Optical Metro 5200 Shelves and Components*, 323-1701-201.
80	Take the appropriate SC-SC patch cord that you will use to connect the patch panel to the subtending equipment Rx port and connect one end to the patch panel port labeled "CPE to RX". Make sure that the connector is clean before connecting the fiber.
81	Route the patch cord through the patch panel as shown in Figure 3-32 on page 3-204 and Figure 3-33 on page 3-204.
82	Route the SC-SC optical patch cord through the patch panel and to the subtending equipment.
83	Make sure that the SC connector is clean, and then connect it to the subtending equipment Rx.
84	Close the patch panel drawer. This procedure is completed. You have fibered the subtending equipment to the SFP client interface ports for the unidirectional GbE traffic link, at both the near end and the far end sites.

—end—

Procedure 3-36
Connecting a site to the backbone

Follow this procedure to connect a site to the backbone. This procedure applies to all valid components that can connect to the backbone, except for the trunk switch.

> ***Note:*** If you are connecting a site that uses a trunk switch, refer to the procedure "Interconnecting Optical Trunk Switches through the backbone" on page 3-273 or "Interconnecting Enhanced Trunk Switches through the backbone" on page 3-279.

Ring topologies have sites with incoming and outgoing backbone fibers on both ends of the site (east and west). For these sites, you must connect both the east and west side of the site to the backbone.

Terminal sites in linear topologies have incoming and outgoing fibers on one end of the site only. For these sites, you must connect only one side of the site to the backbone.

Requirements

Table 3-86 lists the tools and materials required to complete the procedure.

Table 3-86
Required tools and materials

Item	Quantity	Supplied
Antistatic wrist and heel straps	1	no
Fiber-optic cleaning kit	1	no
Fiber inspection scope	1	no
Phillips #1 screwdriver required only if OMX type is DWDM (Standard)	1	no
Phillips #2 screwdriver required only if OMX type is OMX 16CH DWDM	1	no

—continued—

Procedure 3-36 (continued)
Connecting a site to the backbone

Precautions

DANGER
Invisible laser radiation
The Optical Metro 5100/5200 operates up to a Hazard Level of k x 3A (IEC 60825-2:2000) or 1M (IEC 60825-2:2004). Use only viewing instruments with proper optical attenuation.

CAUTION
Risk of affecting network reliability
Make sure that all connectors are cleaned before you make the connections (or re-connections) described in this procedure. For cleaning information, see the chapter "Cleaning connectors", in *Installing Optical Metro 5200 Shelves and Components*, 323-1701-201.

CAUTION
Possible risk of damage to equipment and fiber
Make sure that the bulkhead connectors are lowered and snapped into place before you close the drawers. In the case of an OMX 16CH DWDM, make sure that the sliders are pushed fully to the rear before closing the front cover. Failure to do so could cause damage to the connector unit, the fibers attached to the connector unit, or both.

Observe the minimum bend radius of 1.18 inches (30 mm) for the patch cords. Always use the fiber management components in the drawer to route the fiber.

Allow for sufficient slack in the fibers that enter and exit the drawers. If sufficient slack is not left, the fibers can become stretched and damaged when the drawer is opened.

—continued—

Procedure 3-36 (continued)
Connecting a site to the backbone

Action

Step	Action

Connecting the east side of a site to the backbone

1 Refer to the following table to determine the connections you must make.

From backbone	**To**				
	C&L s/c (east)	**1310 nm s/c** (east)	**ECT** (east)	**OMX** (first east-facing) (see Note)	**OSC** (east)
TX	OTS IN	OTS IN	OTS IN	OTS IN	OTS IN
RX	OTS OUT	OTS OUT	OTS OUT	OTS OUT	OTS OUT
Note: If you are not connecting a ITU CWDM site (without pass-through) to the backbone, make sure that you have already completed the procedure "Connecting multiple OMXs in a series" on page 3-9. These connections also apply to OMX 16CH DWDM.					

2 Locate the east backbone fiber and the first east-facing component and refer to the chapter "Accessing internal connectors" in part 1 of this document to access the component connectors.

3 Make the connections.

4 Route the fiber.

5

If the site is part of	**Then** go to
a ring topology	step 6
a linear topology	step 10

—continued—

Procedure 3-36 (continued)
Connecting a site to the backbone

Step	Action

Connecting the west side of a site to the backbone

6 Refer to the following table to determine the connections you must make.

From backbone	**To**				
	C&L s/c (west)	**1310 nm s/c** (west)	**ECT** (west)	**OMX** (1st west-facing) (see Note)	**OSC** (west)
TX	OTS IN	OTS IN	OTS IN	OTS IN	OTS IN
RX	OTS OUT	OTS OUT	OTS OUT	OTS OUT	OTS OUT
Note: If you are not connecting a ITU CWDM (without pass-through) site to the backbone, make sure that you have already completed the procedure "Connecting multiple OMXs in a series" on page 3-9. These connections also apply to OMX 16CH DWDM.					

7 Locate the west backbone fiber and the first west-facing component and refer to the chapter "Accessing internal connectors" in part 1 of this document to access the component connectors.

8 Make the connections according to the table in step 6.

9 Route the fiber.

10 Close the component drawer.

—end—

Procedure 3-37
Interconnecting Optical Trunk Switches through the backbone

Follow this procedure to make optical connections through the backbone from an Optical Trunk Switch at a terminal site to another Optical Trunk Switch at a terminal site in an unamplified point-to-point network. Each terminal site in a point-to-point network contains one Optical Trunk Switch and potentially a patch panel.

Requirements

Before you begin this procedure make sure

- you know that optical attenuator pads and patch panel (NT0H43CA or NT0H43CB) can be required if the trunk switch link will support 10 Gbit/s OTR Enhanced circuit pack or Muxponder circuit pack signals.
- you know that this procedure requires the installation team to potentially travel between the trunk switch sites a few times. It is recommended that installation personnel be present at both trunk switch sites simultaneously to efficiently complete this procedure.

  For details about provisioning and operating the Optical Trunk Switch, see the chapter "Optical Trunk Switch OAM&P" in *Provisioning and Operating Procedures*, 323-1701-310.
- all connectors are clean. For information on cleaning, see "Cleaning connectors" in *Installing Optical Metro 5200 Shelves and Components*, 323-1701-201.
- you have completed all installation procedures pertaining to Optical Trunk Switch.
- you have changed the default IP address of both Optical Trunk Switches so that it is remotely accessible.
- you refer to Table 3-87 to determine the connections you must make.

—continued—

Procedure 3-37 (continued)
Interconnecting Optical Trunk Switches through the backbone

Table 3-87
Connections required to interconnect Optical Trunk Switches

From	**To**
Optical Trunk Switch at Location 1	**Optical Trunk Switch at location 2**
PRI Tx	PRI Rx
PRI Rx	PRI Tx
STNBY Tx	STNBY Rx
STNBY Rx	STNBY Tx

Table 3-88 lists the tools and materials you require to interconnect the trunk switches through the backbone.

Table 3-88
Required tools and materials

Item	**Quantity**	**Supplied**
Antistatic wrist strap	1	no
Optical fiber cleaning kit	1	no
Fiber inspection scope	1	no
SC-SC optical patch cords	4	no

—continued—

Procedure 3-37 (continued)
Interconnecting Optical Trunk Switches through the backbone

Precautions

DANGER
Invisible laser radiation
The Optical Metro 5100/5200 operates up to a Hazard Level of k x 3A (IEC 60825-2:2000) or 1M (IEC 60825-2:2004). Use only viewing instruments with proper optical attenuation.

CAUTION
Risk of affecting network reliability
Make sure that all connectors are cleaned before you make the connections (or re-connections) described in this procedure. For cleaning information, see the chapter "Cleaning connectors", in *Installing Optical Metro 5200 Shelves and Components*, 323-1701-201.

CAUTION
Possible risk of damage to equipment and fiber
Make sure that the bulkhead connectors are lowered and snapped into place before you close the drawers. Failure to do so could cause damage to the connector unit, the fibers attached to the connector unit, or both.

Observe the minimum bend radius of 1.18 inches (30 mm) for the patch cords. Always use the fiber management components in the drawer to route the fiber.

Allow for sufficient slack in the fibers that enter and exit the drawers. If sufficient slack is not left, the fibers can become stretched and damaged when the drawer is opened.

—continued—

Procedure 3-37 (continued)
Interconnecting Optical Trunk Switches through the backbone

Action

Step	Action	
1	Locate the Optical Trunk Switch at Location 1 and at Location 2.	
2	Interconnect the Optical Trunk Switches through the backbone. Refer to Table 3-87 on page 3-274 to determine the connections you must make.	
3	**If** the Optical Trunk Switch link	**Then** go to
	is to immediately support 10 Gbit/s OTR Enhanced circuit pack signals or the Muxponder circuit pack or will be later upgraded with the 10 Gbit/s OTR Enhanced circuit pack signals or the Muxponder circuit pack	step 4
	will never support 10 Gbit/s OTR Enhanced circuit pack signals or Muxponder circuit pack signals	you have completed this procedure
4	Choose Location 1 to start the interconnection process.	
5	Locate the Optical Trunk Switch and disconnect the OTS_{IN} port.	
6	Proceed to the other terminal site (Location 2) and locate the Optical Trunk Switch.	
7	Disconnect the OTS_{OUT} port.	
8	Connect an optical power meter to the OTS_{OUT} port.	
9	Establish TL1 communications with Optical Trunk Switch at Location 1.	
10	Set the remote Optical Trunk Switch at Location 1 to operate in manual mode. Use the menu to set the Optical Mode for each Optical Trunk Switch to MANUAL operating mode.	
11	Use the front panel buttons to set the local Optical Trunk Switch at Location 2 to operate in MANUAL mode.	
12	Set the remote Optical Trunk Switch at Location 1 to the primary path. Use the menu to set the Optical Switch Position to PRIMARY.	
13	If required, set the local Optical Trunk Switch at Location 2 to the STNBY path using the front panel buttons.	

—continued—

Procedure 3-37 (continued)
Interconnecting Optical Trunk Switches through the backbone

Step	Action
14	Record the optical power reading for the standby path: _____ dBm.
15	Set the remote Optical Trunk Switch at Location 1 to the standby path. Use the menu to set the Optical Switch Position to STNBY.
16	Set the local Optical Trunk Switch at Location 2 to the PRIMARY path using the front panel buttons.
17	Record the optical power reading for the primary path: _____ dBm.
18	**If** he two power readings / **Then** differ by more than 2dB — go to step 19 do not differ by more than 2dB — at Location 2, remove the optical power meter from the OTS_{OUT} port and reconnect the OTS_{OUT} to the intended optical component before returning to Location 1, ensure that Optical Trunk Switch at Location 2 is set to AUTOMATIC, cancel the TL1 session with Location 1 at Location 1, reconnect OTS_{IN} to the intended optical component, via the front panel buttons, set to AUTOMATIC and switch to Primary. you have completed this procedure
19	You must install optical attenuator pads. Since these attenuator pads must be installed within a patch panel rather than directly on the Optical Trunk Switch you may need to install a patch panel at both Locations. If not already installed, follow Procedure 3-39 “Interconnecting trunk switches through the backbone using a patch panel” on page 3-284 to install a patch panel. ***Note:*** Once you have installed and completed Procedure 3-39 for each patch panel at both locations, go to step 20.
20	Place an appropriate optical attenuator pad in the high power path to balance the two link losses as close as possible within 2 dB. It is recommended to install this attenuator inside the patch panel at Location 2 on the appropriate NORTEL To RX port that corresponds to an Optical Trunk Switch PRI Rx or STNBY Rx port. Refer to Table 3-92 on page 3-285 for a diagram. ***Note:*** Do not over-attenuate this path, the attenuated path's output power should still be greater than that of the low power path within maximum 2 dB.
21	Verify that the optical power reading for the path you have just attenuated in step 20 still reads higher than that of the other path; otherwise reduce the amount of attenuation. If you require guidance, refer to step 12 through step 17.

—continued—

Procedure 3-37 (continued)
Interconnecting Optical Trunk Switches through the backbones

Step	Action
22	Before returning to Location 1, make sure that the following are met at Location 2: • disconnect the optical power meter from the OTS_{OUT} port • reconnect the OTS_{OUT} port to the intended optical component • the Optical Mode for the Optical Trunk Switch is set to AUTOMATIC • cancel the TL1 session with Location 1
23	At Location 1, make sure that the following are met: • reconnect OTS_{IN} port to the intended optical component. • use the front panel buttons to set to AUTOMATIC • use the front panel buttons to switch to Primary • verify that Location 2 remains on Primary
24	Repeat step 4 through step 23 because the return path can also require attenuation.When you repeat these steps, substitute Location 2 wherever the procedure refers to Location 1, and substitute Location 1 wherever the procedure refers to Location 2. **—end—**

Procedure 3-38
Interconnecting Enhanced Trunk Switches through the backbone

Follow this procedure to make optical connections through the backbone from an Enhanced Trunk Switch at a terminal site to another Enhanced Trunk Switch at a terminal site in a point-to-point network. Each terminal site in a point-to-point network contains one Enhanced Trunk Switch and potentially a patch panel.

For details about provisioning and operating the Enhanced Trunk Switch, see the chapter "Enhanced Trunk Switch OAM&P" in *Provisioning and Operating Procedures*, 323-1701-310.

Requirements

Before you begin this procedure make sure

- you have completed all installation procedures pertaining to the Enhanced Trunk Switch, see *Installing Optical Metro 5200 Shelves and Components*, 323-1701-201.
- you have completed Procedure 3-18 "Connecting trunk switches to optical components" on page 3-109 and optical power is available at port A.
- you know that optical attenuator pads and patch panel (NT0H43CA or NT0H43CB) can be required if the trunk switch link will support 10 Gbit/s OTR Enhanced circuit pack or Muxponder circuit pack signals.
- you know that this procedure requires the installation team to potentially travel between the trunk switch sites a few times. It is recommended that installation personnel be present at both trunk switch sites simultaneously to efficiently complete this procedure.
- all connectors are clean. For information on cleaning, see "Cleaning connectors" in *Installing Optical Metro 5200 Shelves and Components*, 323-1701-201.

—continued—

Procedure 3-38 (continued)
Interconnecting Enhanced Trunk Switches through the backbone

Table 3-89
Connections required to interconnect Enhanced Trunk Switches (without pre-amplification)

From	To
Enhanced Trunk Switch at Location 1	**Enhanced Trunk Switch at location 2**
C	D
D	C
E	F
F	E

Table 3-90
Connections required to interconnect Enhanced Trunk Switches (with pre-amplification)

From	To next optical component at the site	
Enhanced Trunk Switch	**C&L s/c**	**HIP**
C	OTS IN	OTS IN
D	OTS OUT	OTS OUT
E	OTS IN	OTS IN
F	OTS OUT	OTS OUT

Table 3-91 lists the tools and materials you require to interconnect the trunk switches through the backbone.

Table 3-91
Required tools and materials

Item	Quantity	Supplied
Antistatic wrist strap	1	no
Optical fiber cleaning kit	1	no
Fiber inspection scope	1	no
SC-SC optical patch cords	4	no

—continued—

Procedure 3-38 (continued)
Interconnecting Enhanced Trunk Switches through the backbone

Precautions

DANGER
Invisible laser radiation
The Optical Metro 5100/5200 operates up to a Hazard Level of k x 3A (IEC 60825-2:2000) or 1M (IEC 60825-2:2004). Use only viewing instruments with proper optical attenuation.

CAUTION
Risk of affecting network reliability
Make sure that all connectors are cleaned before you make the connections (or re-connections) described in this procedure. For cleaning information, see the chapter "Cleaning connectors", in *Installing Optical Metro 5200 Shelves and Components*, 323-1701-201.

CAUTION
Possible risk of damage to equipment and fiber
Make sure that the bulkhead connectors are lowered and snapped into place before you close the drawers. Failure to do so could cause damage to the connector unit, the fibers attached to the connector unit, or both.

Observe the minimum bend radius of 1.18 inches (30 mm) for the patch cords. Always use the fiber management components in the drawer to route the fiber.

Allow for sufficient slack in the fibers that enter and exit the drawers. If sufficient slack is not left, the fibers can become stretched and damaged when the drawer is opened.

—continued—

Procedure 3-38 (continued)
Interconnecting Enhanced Trunk Switches through the backbone

Action

Step	Action
1	Locate the Enhanced Trunk Switch at Location 1 and at Location 2.
2	Determine the connections you make and interconnect the Enhanced Trunk Switches through the backbone. ***Note 1:*** If the Enhanced Trunk Switch link does not require pre-amplification, refer to Table 3-89 on page 3-280. ***Note 2:*** If the Enhanced Trunk Switch link requires pre-amplification, refer to Table 3-90 on page 3-280. See , in *Network Planning and Link Engineering,* 323-1701-110 (part 1) for an illustration of ETS path protection.
3	**If** the trunk switch link — **Then** go to is to immediately support 10 Gbit/s OTR Enhanced circuit pack signals or the Muxponder circuit pack or — step 4 will be later upgraded with the 10 Gbit/s OTR Enhanced circuit pack signals or the Muxponder circuit pack will never support 10 Gbit/s OTR Enhanced circuit pack signals or Muxponder circuit pack signals — you have completed this procedure
4	Locate the Enhanced Trunk Switch at Location 1.
5	Disconnect port D and connect an optical power meter to the optical fiber patch cord which was connected to port D.
6	Record the optical power reading for the primary path: _____ dBm.
7	Disconnect the optical power meter and reconnect the optical fiber patch cord to port D.
8	Disconnect port F and connect an optical power meter to the optical fiber patch cord which was connected to port F.
9	Record the optical power reading for the secondary path: _____ dBm.
10	Disconnect the optical power meter and reconnect the optical fiber patch cord to port F.
11	**If** — **Then** the two power readings differ by more than 2 dB — go to step 12 the two power readings do not differ by more than 2 dB — you have completed this procedure

—continued—

Procedure 3-38 (continued)
Interconnecting Enhanced Trunk Switches through the backbone

Step	Action
12	You must install optical attenuator pads. Since these attenuator pads must be installed within a patch panel rather than directly on the Enhanced Trunk Switch you may need to install a patch panel at both Locations. If not already installed, follow Procedure 3-39 “Interconnecting trunk switches through the backbone using a patch panel” on page 3-284 to install a patch panel. ***Note:*** Once you have installed and completed Procedure 3-39 for each patch panel at both locations, go to step 13.
13	Place an appropriate optical attenuator pad in the high power path to balance the two link losses as close as possible to within 2 dB. It is recommended to install this attenuator inside the patch panel at Location 2 on the appropriate NORTEL From TX port that corresponds to an Enhanced Trunk Switch D or F port. Refer to Table 3-93 on page 3-285 or Figure 3-51 on page 3-289. ***Note:*** Do not over-attenuate this path, the attenuated path's output power should still be greater than that of the low power path but no higher than 2 dB.
14	Verify that the optical power reading for the path you have just attenuated in step 13 still reads higher than that of the other path; otherwise reduce the amount of attenuation. If you require guidance, refer to step 5 through step 9.
15	At Location 1, make sure that the ETS is set to AUTOMATIC mode and Primary path is active.
16	Repeat step 5 through step 10 because the return path can also require attenuation.When you repeat these steps, substitute Location 2 wherever the procedure refers to Location 1, and substitute Location 1 wherever the procedure refers to Location 2. **—end—**

Procedure 3-39
Interconnecting trunk switches through the backbone using a patch panel

Follow this procedure to make optical connections to interconnect:

- Optical Trunk Switches (OTS) through the backbone using a patch panel
- Enhanced Trunk Switches (ETS) through the backbone using a patch panel

Note: This procedure is not always required. Perform this procedure if instructed by Procedure 3-37 "Interconnecting Optical Trunk Switches through the backbone" on page 3-273 or in Procedure 3-38 "Interconnecting Enhanced Trunk Switches through the backbone" on page 3-279 or if you know that optical attenuator pads are required because the trunk switch point-to-point unamplified network is to support the 10 Gbit/s OTR Enhanced circuit pack.

Requirements

Before you begin this procedure make sure

- you know that optical attenuator pads and patch panel (NT0H43CA NT0H43CB) are required.
- you have completed all installation procedures pertaining to patch panel.
- you know that this procedure requires the installation team to potentially travel between the trunk switch sites a few times. It is recommended that installation personnel be present at both trunk switch sites simultaneously to efficiently complete this procedure.
- all connectors are clean. For information on cleaning, see "Cleaning connectors" in *Installing Optical Metro 5200 Shelves and Components*, 323-1701-201.
- Determine the connections you must make:
  - if you have an Optical Trunk Switch, see Table 3-92 on page 3-285.
  - if you have an Enhanced Trunk Switch, see Table 3-93 on page 3-285.

—continued—

Procedure 3-39 (continued)
Interconnecting trunk switches through the backbone using a patch panel

Table 3-92
Connections required to connect an Optical Trunk Switch to a patch panel

From	**To**	
Optical Trunk Switch	**Patch Panel**	
	Bulkhead 1	**Bulkhead 2**
PRI Tx	NORTEL Fm TX	
PRI Rx	NORTEL To RX	
STNBY Tx		NORTEL Fm TX
STNBY Rx		NORTEL To RX

Table 3-93
Connections required to connect an Enhanced Trunk Switch to a patch panel

From	**To**	
Enhanced Trunk Switch	**Patch Panel**	
	Bulkhead 1	**Bulkhead 2**
C	NORTEL Fm TX	
D	NORTEL To RX	
E		NORTEL Fm TX
F		NORTEL To RX

Table 3-94
Connections required to interconnect patch panels through the backbone

From	**To**
Patch Panel at Location 1	**Patch Panel at Location 2**
Bulkhead 1	**Bulkhead 1**
CPE To RX	CPE Fm TX
CPE Fm TX	CPE To RX
Bulkhead 2	**Bulkhead 2**
CPE To RX	CPE Fm TX
CPE Fm TX	CPE To RX

—continued—

Procedure 3-39 (continued)
Interconnecting trunk switches through the backbone using a patch panel

Precautions

DANGER
Invisible laser radiation
The Optical Metro 5100/5200 operates up to a Hazard Level of k x 3A (IEC 60825-2:2000) or 1M (IEC 60825-2:2004). Use only viewing instruments with proper optical attenuation.

CAUTION
Risk of affecting network reliability
Make sure that all connectors are cleaned before you make the connections (or re-connections) described in this procedure. For cleaning information, see the chapter "Cleaning connectors", in *Installing Optical Metro 5200 Shelves and Components*, 323-1701-201.

CAUTION
Possible risk of damage to equipment and fiber
Make sure that the bulkhead connectors are lowered and snapped into place before you close the drawers. Failure to do so could cause damage to the connector unit, the fibers attached to the connector unit, or both.

Observe the minimum bend radius of 1.18 inches (30 mm) for the patch cords. Always use the fiber management components in the drawer to route the fiber.

Allow for sufficient slack in the fibers that enter and exit the drawers. If sufficient slack is not left, the fibers can become stretched and damaged when the drawer is opened.

—continued—

Procedure 3-39 (continued)
Interconnecting trunk switches through the backbone using a patch panel

Action

Step	Action	
1	**If** you have deployed	**Then** refer to
	Optical Trunk Switch	Figure 3-50 on page 3-288 for an illustration
	Enhanced Trunk Switch	Figure 3-51 on page 3-289 for an illustration
2	Locate the trunk switch at location 1.	
3	If a patch panel is unavailable, install one by following Procedure 4-15, "Installing and grounding equipment drawers" in *Installing Optical Metro 5200 Shelves and Components*, 323-1701-201.	
4	Connect the trunk switch to the patch panel. Refer to Table 3-92 on page 3-285 or Table 3-93 on page 3-285 to determine the connections you must make depending on the type of trunk switch.	
5	Locate the trunk switch at location 2.	
6	If a patch panel is unavailable, install one by following Procedure 4-15, "Installing and grounding equipment drawers" in *Installing Optical Metro 5200 Shelves and Components*, 323-1701-201.	
7	Connect the trunk switch to the patch panel. Refer to Table 3-92 on page 3-285 or Table 3-93 on page 3-285 to determine the connections you must make depending on the type of Trunk Switch.	
8	Interconnect the two patch panels through the backbone. Refer to Table 3-94 on page 3-285 to determine the connections you must make.	
9	**If** you were performing	**Then** return to
	Procedure 3-37	step 20 of Procedure 3-37
	Procedure 3-38	step 13 of Procedure 3-38

—end—

Figure 3-50
Interconnecting Optical Trunk Switch through the backbone using a patch panel

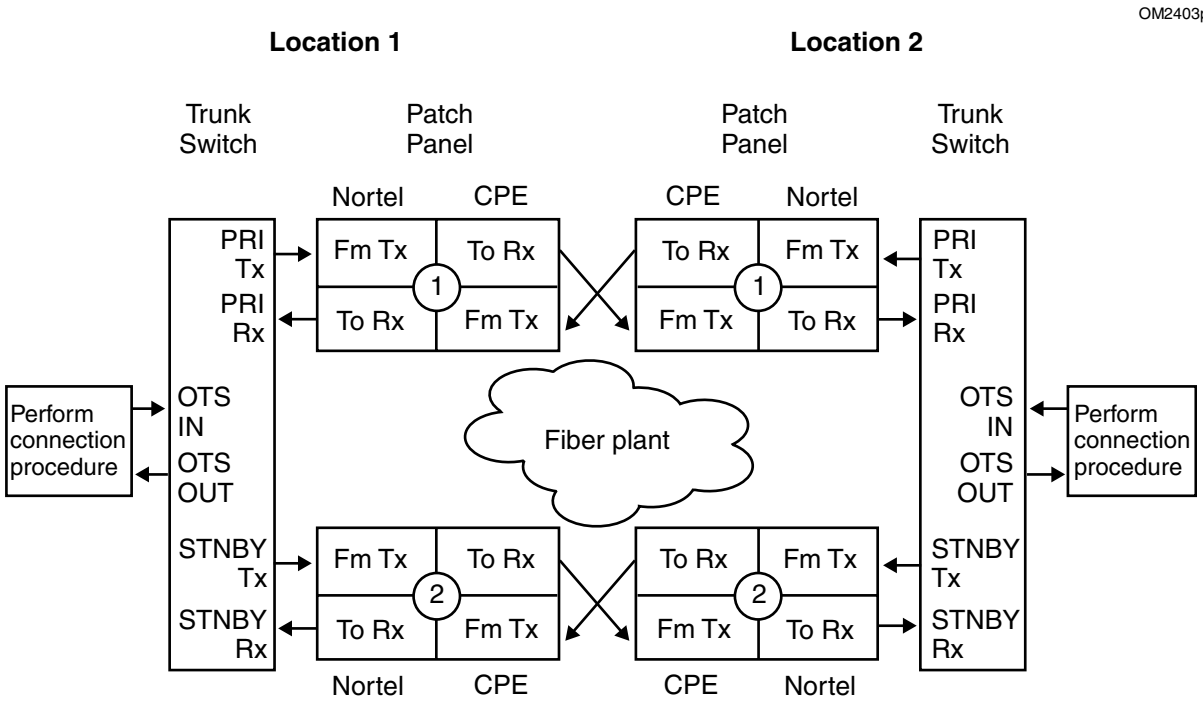

Legend

1 2	patch panel bulkhead
Perform connection procedure	perform procedure to connect Trunk Switches to optical components

Figure 3-51
Interconnecting Enhanced Trunk Switch through the backbone using a patch panel

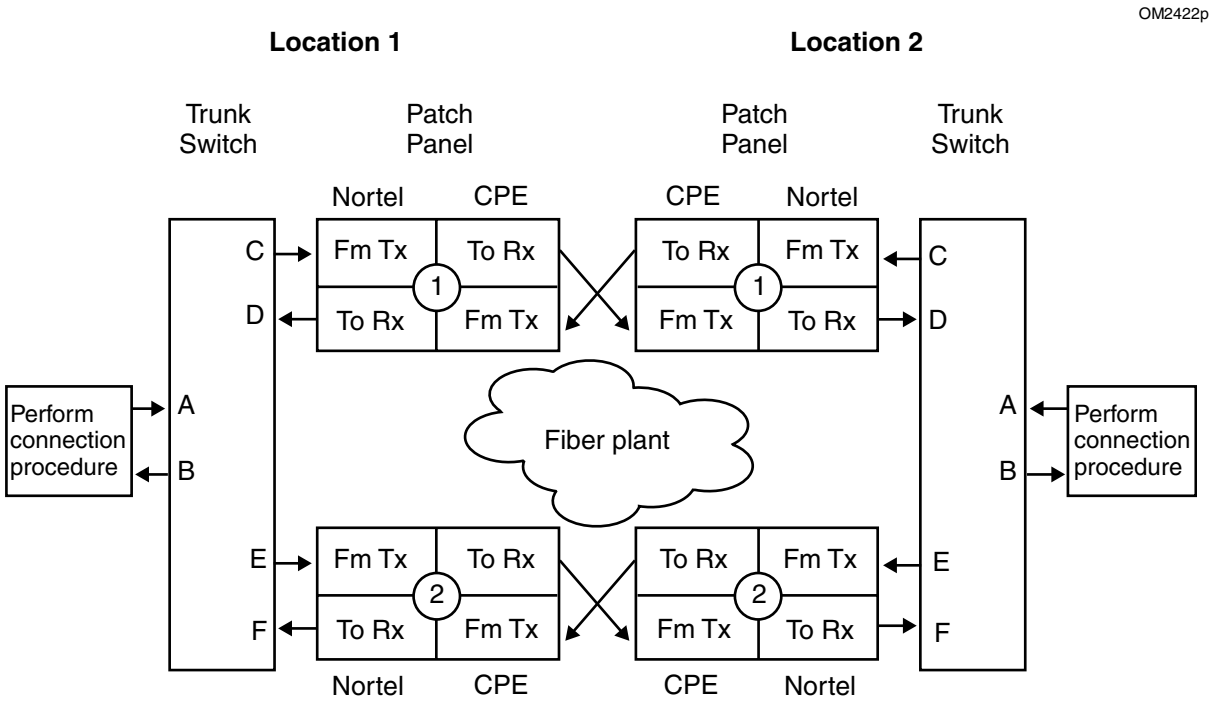

Legend

1 2	patch panel bulkhead
Perform connection procedure	perform procedure to connect Trunk Switches to optical components

Procedure 3-40
Connecting OCLDs or OTRs to the backbone at sites without OMXs

Follow this procedure to connect OCLD or OTR circuit packs directly to the backbone at sites without OMXs.

This procedure assumes that you do not require attenuation between OCLD or OTR circuit packs in configurations that do not use OMXs. If you do require attenuation for this configuration, refer to the procedure "Connecting OCLDs or OTRs to the patch panel at sites without OMXs" on page 3-294.

Requirements

Before you begin this procedure make sure that all connectors are clean. For information on cleaning, see "Cleaning connectors" in *Installing Optical Metro 5200 Shelves and Components*, 323-1701-201.

Table 3-95 lists the tools and materials required to complete this procedure.

Table 3-95
Required tools and materials

Item	Quantity	Supplied
Antistatic wrist and heel straps	1	no
Fiber-optic cleaning kit	1	no
Fiber inspection scope	1	no
SC-to-FC duplex optical patch cord (see Note)	1 for each 1.25G OCLD or 2.5G OCLD circuit pack	order from Nortel Networks
SC-to-LC duplex optical patch cord (see Note)	1 for each 2.5G Flex OCLD, 2.5G Universal OCLD or 2.5G Flex OTR circuit pack	order from Nortel Networks
Note: Refer to "Fiber-optic patch cords" on page 13-97 in *Network Planning and Link Engineering*, 323-1701-110.		

—continued—

Procedure 3-40 (continued)
Connecting OCLDs or OTRs to the backbone at sites without OMXs

Precautions

DANGER
Invisible laser radiation
The Optical Metro 5100/5200 operates up to a Hazard Level of k x 3A (IEC 60825-2:2000) or 1M (IEC 60825-2:2004). Use only viewing instruments with proper optical attenuation.

CAUTION
Risk of affecting network reliability
Make sure that all connectors are cleaned before you make the connections (or re-connections) described in this procedure. For cleaning information, see the chapter "Cleaning connectors", in *Installing Optical Metro 5200 Shelves and Components*, 323-1701-201.

CAUTION
Possible risk of damage to equipment and fiber
Make sure that the bulkhead connectors are lowered and snapped into place before you close the drawers. Failure to do so can cause damage to the connector unit, the fibers attached to the connector unit, or both.

Observe the minimum bend radius of 1.18 inches (30 mm) for the patch cords. Always use the fiber management components in the drawer to route the fiber.

Allow for sufficient slack in the fibers that enter and exit the drawers. If sufficient slack is not left, the fibers can become stretched and damaged when the drawer is opened.

Action

Step	Action	
1	**If** you are connecting a	**Then** go to
	OCLD 1.25G or OCLD 2.5G	step 2
	OCLD 2.5G Flex or OCLD 2.5G Universal or OTR 2.5G Flex	step 9

—continued—

Procedure 3-40 (continued)
Connecting OCLDs or OTRs to the backbone at sites without OMXs

Step	Action

2 Refer to the following table to determine the connections you must make.

Backbone	OCLD 1.25G or OCLD 2.5G port label
RX	TX
TX	RX

3 Connect the FC-end of an SC-FC duplex optical patch cord to the TX connector on the faceplate of the 1.25G OCLD or 2.5G OCLD circuit pack.

4

If you are connecting a 1.25G OCLD or 2.5G OCLD in an	**Then**
Optical Metro 5100 shelf	• Route the patch cord out of the shelf to the right, and up the right-hand vertical rack rail to the fiber management area at the top of the rack.
Optical Metro 5200 shelf	• Route the patch cord out of the east plane of the shelf to the right, and up the right-hand vertical rack rail to the fiber management area at the top of the rack. • Route the patch cord out of the west plane of the shelf to the left, and up the left-hand vertical rack rail to the fiber management area at the top of the rack.

5 Connect the SC-end of the SC-FC duplex optical patch cord to the RX backbone connection.

6 Connect the other FC-end of the SC-FC duplex optical patch cord to the RX connector on the faceplate of the 1.25G OCLD or 2.5G OCLD circuit pack.

7 Connect the other SC-end of the SC-FC duplex optical patch cord to the TX backbone connection.

8 If necessary, repeat step 2 through step 7 for other 1.25G OCLD or 2.5G OCLD circuit packs.

9 Refer to the following table to determine the connections you must make.

Backbone	2.5G Flex OCLD, 2.5G Universal OCLD or OTR port label
RX	LINE TX
TX	LINE RX

10 Connect the LC-end of an SC-LC duplex optical patch cord to the LINE TX connector on the faceplate of the 2.5G Flex OCLD, 2.5G Universal OCLD or OTR circuit pack.

—continued—

Procedure 3-40 (continued)
Connecting OCLDs or OTRs to the backbone at sites without OMXs

Step	Action	
11	**If** you are connecting a 2.5G Flex or Universal OCLD or OTR in an	**Then**
	Optical Metro 5100 shelf	• Route the patch cord out of the shelf to the right, and up the right-hand vertical rack rail to the fiber management area at the top of the rack.
	Optical Metro 5200 shelf	• Route the patch cord out of the east plane of the shelf to the right, and up the right-hand vertical rack rail to the fiber management area at the top of the rack. • Route the patch cord out of the west plane of the shelf to the left, and up the left-hand vertical rack rail to the fiber management area at the top of the rack.
12	Connect the SC-end of the SC-LC duplex optical patch cord to the Rx backbone connection.	
13	Connect the other LC-end of the SC-LC duplex optical patch cord to the LINE RX connector on the faceplate of the 2.5G Flex OCLD, 2.5G Universal OCLD,or OTR circuit pack.	
14	Connect the other SC-end of the SC-LC duplex optical patch cord to the TX backbone connection.	
15	If necessary, repeat step 9 through step 14 for other 2.5G Flex OCLD, 2.5G Universal OCLD or OTR circuit packs.	
	—end—	

Procedure 3-41
Connecting OCLDs or OTRs to the patch panel at sites without OMXs

Follow this procedure to connect the OCLD or OTR circuit pack to the NT0H43CA or NT0H43CB patch panel at a site without OMXs. A NT0H43CA or NT0H43CB patch panel is only required for an OCLD or OTR connection if the Rx port on the OCLD or OTR requires attenuation.

Requirements

Nortel Networks recommends that you use one patch panel for OCLD or OTR attenuation, and a separate patch panel for connecting OCI SRM SONET/SDH and OCI SRM circuit packs to subtending equipment.

Before you begin this procedure make sure:

- all connectors are clean. For information on cleaning, see "Cleaning connectors" in *Installing Optical Metro 5200 Shelves and Components*, 323-1701-201.
- you are familiar with accessing connectors in a NT0H43CA or NT0H43CB patch panel. See Procedure 1-16 "Accessing connectors in a patch panel" in part 1 of this document.
- your network planning group has provided you with information regarding attenuator requirements.

Table 3-96 lists the tools and materials required to complete the procedure.

Table 3-96
Required tools and materials

Item	Quantity	Supplied
Antistatic wrist and heel straps	1	no
Fiber-optic cleaning kit	1	no
Fiber inspection scope	1	no
SC to FC duplex optical patch cord (see Note)	1 per 1.25G OCLD or 2.5G OCLD	order from Nortel Networks
SC to LC duplex optical patch cord (see Note)	1 per 2.5G Flex OCLD, 2.5G Universal OCLD or OTR	order from Nortel Networks
SC type attenuator	type and value determined by network planning group	no
Note: See "Fiber-optic patch cords" in *Network Planning and Link Engineering*, 323-1701-110.		

—continued—

Procedure 3-41 (continued)
Connecting OCLDs or OTRs to the patch panel at sites without OMXs

Precautions

DANGER
Invisible laser radiation
The Optical Metro 5100/5200 operates up to a Hazard Level of k x 3A (IEC 60825-2:2000) or 1M (IEC 60825-2:2004). Use only viewing instruments with proper optical attenuation.

CAUTION
Risk of affecting network reliability
Make sure that all connectors are cleaned before you make the connections (or re-connections) described in this procedure. For cleaning information, see the chapter "Cleaning connectors", in *Installing Optical Metro 5200 Shelves and Components*, 323-1701-201.

CAUTION
Possible risk of damage to equipment and fiber
Make sure that the bulkhead connectors are lowered and snapped into place before closing any drawers. Failure to do so could cause damage to the connector unit, the fibers attached to the connector unit, or both.

Observe the minimum bend radius of 1.18 inches (30 mm) for the patch cords. Always use the fiber management components in the drawer to route the fiber.

Allow for sufficient slack in the fibers entering and exiting the any drawers. If sufficient slack is not left, the fibers can become stretched and damaged when the drawer is opened.

—continued—

Procedure 3-41 (continued)
Connecting OCLDs or OTRs to the patch panel at sites without OMXs

Action

Step	Action
1	Open and fully extend the drawer of the NT0H43CA or NT0H43CB patch panel.
2	**If** you are connecting a / **Then** go to 1.25G OCLD or 2.5G OCLD — step 3 2.5G Flex OCLD, 2.5G Universal OCLD or OTR — step 12
3	Refer to the following table to determine the connections you will make:

Patch panel port label	1.25G OCLD or 2.5G OCLD port label
NORTEL To RX	RX
NORTEL Fm TX	TX

Step	If	Then
4	Clean the attenuator and connect it to the patch panel port labeled “NORTEL To RX”. See Figure 3-52 and Figure 3-53 on page 3-299.	
5	Connect an SC-end of the SC-FC duplex optical patch cord to the patch panel port labeled “NORTEL To RX”. The patch panel port already has an attenuator installed, as outlined in step 4.	
6	you are connecting a 1.25G OCLD or 2.5G OCLD in an Optical Metro 5100 shelf	Route The optical patch cord out of the drawer to the right using the slack management components. Route the optical patch cord along the right-hand side of the vertical rack rail to the 1.25G OCLD or 2.5G OCLD circuit pack.
	you are connecting a 1.25G OCLD or 2.5G OCLD in an Optical Metro 5200 shelf	Route the optical patch cord out of the drawer to the right using the slack management components. Route the optical patch cord along the right-hand side of the vertical rack rail to the 1.25G OCLD or 2.5G OCLD circuit pack in the east plane of the shelf. Route the optical patch cord out of the drawer to the left using the slack management components. Route the optical patch cord along the left-hand side of the vertical rack rail to the 1.25G OCLD or 2.5G OCLD circuit pack in the west plane of the shelf.

—continued—

Procedure 3-41 (continued)
Connecting OCLDs or OTRs to the patch panel at sites without OMXs

Step	Action
7	Connect an FC-end of the SC-FC duplex optical patch cord to the RX port on the 1.25G OCLD or 2.5G OCLD circuit pack faceplate.
8	Connect the other FC-end of the SC-FC duplex optical patch cord to the TX connector on the faceplate of the 1.25G OCLD or 2.5G OCLD circuit pack.
9	Connect the other SC-end of the SC-FC duplex optical patch cord to the patch panel port labeled “NORTEL Fm TX”.
10	If necessary, repeat step 3 to step 9 for other 1.25G OCLD or 2.5G OCLD circuit packs.
11	Go to step 20.
12	Refer to the following table to determine the connections you will make:

Patch panel port label	2.5G Flex OCLD, 2.5G Universal OCLD or OTR port label
NORTEL To RX	LINE RX
NORTEL Fm TX	LINE TX

Step	Action
13	Clean the attenuator and connect it to the patch panel port labeled “NORTEL To RX”. See Figure 3-52 and Figure 3-53 on page 3-299.
14	Connect an SC-end of the SC-LC duplex optical patch cord to the patch panel port labeled “NORTEL To RX”. The patch panel port already has an attenuator installed, as outlined in step 13.

15

If	Then
you are connecting a 2.5G Flex OCLD, 2.5G Universal OCLD or OTR in an Optical Metro 5100 shelf	Route the optical patch cord out of the drawer to the right using the slack management components. Route the optical patch cord along the right-hand side of the vertical rack rail to the 2.5G Flex OCLD, 2.5G Universal OCLD or OTR circuit pack.
you are connecting a 2.5G Flex OCLD, 2.5G Universal OCLD or OTR in an Optical Metro 5200 shelf	Route the optical patch cord out of the drawer to the right using the slack management components. Route the optical patch cord along the right-hand side of the vertical rack rail to the 2.5G Flex OCLD, 2.5G Universal OCLD or OTR circuit pack in the east plane of the shelf. Route the optical patch cord out of the drawer to the left using the slack management components. Route the optical patch cord along the left-hand side of the vertical rack rail to the 2.5G Flex OCLD, 2.5G Universal OCLD or OTR circuit pack in the west plane of the shelf.

—continued—

Procedure 3-41 (continued)
Connecting OCLDs or OTRs to the patch panel at sites without OMXs

Step	Action
16	Connect an LC-end of the SC-LC duplex optical patch cord to the LINE RX port on the 2.5G Flex OCLD, 2.5G Universal OCLD or OTR circuit pack faceplate.
17	Connect the other LC-end of the SC-LC duplex optical patch cord to the LINE TX connector on the faceplate of the 2.5G Flex OCLD, 2.5G Universal OCLD or OTR circuit pack.
18	Connect the other SC-end of the SC-LC duplex optical patch cord to the patch panel port labeled “NORTEL Fm TX”.
19	If necessary, repeat step 12 to step 18 for other 2.5G Flex OCLD, 2.5G Universal OCLD or OTR circuit packs.
20	Close the patch panel drawer.

—end—

Figure 3-52
Connector labels in a NT0H43CA patch panel

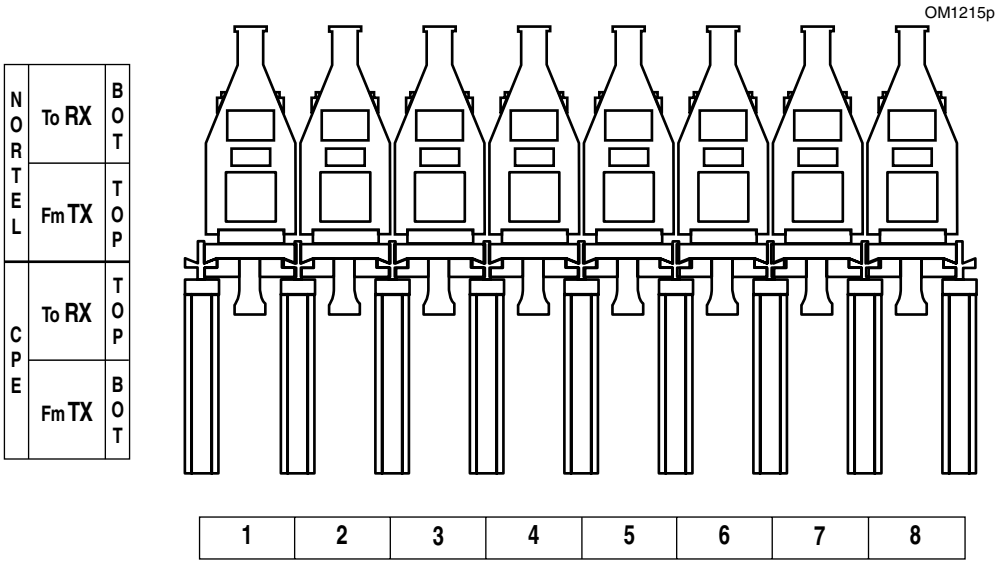

Figure 3-53
Connector labels in a NT0H43CB patch panel

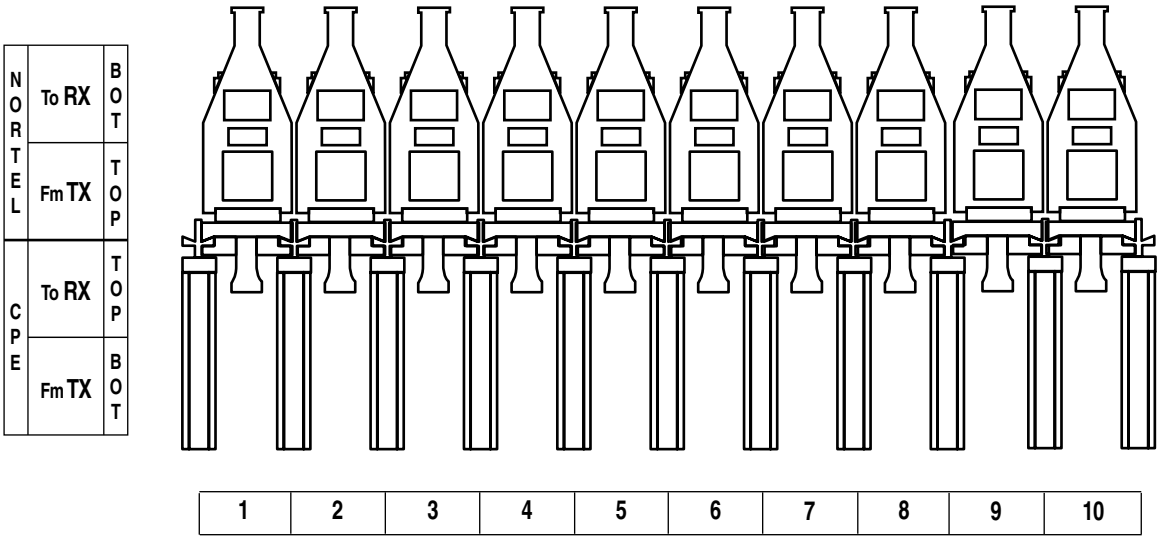

Procedure 3-42
Connecting the patch panel to the backbone at a site without OMXs

Follow this procedure to connect the patch panel to the backbone at a site without OMXs. A NT0H43CA or NT0H43CB patch panel is only required for an OCLD or OTR connection if the Rx port on the OCLD or OTR circuit pack requires attenuation.

Requirements

Before you begin this procedure make sure that:

- all connectors are clean. For information on cleaning, see "Cleaning connectors" in *Installing Optical Metro 5200 Shelves and Components*, 323-1701-201.
- you are familiar with accessing connectors in a NT0H43CA or NT0H43CA patch panel. See Procedure 1-16 "Accessing connectors in a patch panel" in part 1 of this document.

Table 3-97 lists the tools and materials required to complete the procedure.

Table 3-97
Required tools and materials

Item	Quantity	Supplied
Antistatic wrist and heel straps	1	no
Fiber-optic cleaning kit	1	no
Fiber inspection scope	1	no
SC to SC optical patch cord	2	no

—continued—

Procedure 3-42 (continued)
Connecting the patch panel to the backbone at a site without OMXs

Precautions

DANGER
Invisible laser radiation
The Optical Metro 5100/5200 operates up to a Hazard Level of k x 3A (IEC 60825-2:2000) or 1M (IEC 60825-2:2004). Use only viewing instruments with proper optical attenuation.

CAUTION
Risk of affecting network reliability
Make sure that all connectors are cleaned before you make the connections (or re-connections) described in this procedure. For cleaning information, see the chapter "Cleaning connectors", in *Installing Optical Metro 5200 Shelves and Components*, 323-1701-201.

CAUTION
Possible risk of damage to equipment and fiber
Make sure that the bulkhead connectors are lowered and snapped into place before closing any drawers. Failure to do so could cause damage to the connector unit, the fibers attached to the connector unit, or both.

Observe the minimum bend radius of 1.18 inches (30 mm) for the patch cords. Always use the fiber management components in the drawer to route the fiber.

Allow for sufficient slack in the fibers entering and exiting the any drawers. If sufficient slack is not left, the fibers can become stretched and damaged when the drawer is opened.

—continued—

Procedure 3-42 (continued)
Connecting the patch panel to the backbone at a site without OMXs

Action

Step	Action
1	Refer to the following table to determine the connections you will make:

From backbone	To patch panel
TX	CPE Fm TX
RX	CPE To RX

Step	Action
2	Connect an SC-end of the SC-SC optical patch cord to the TX backbone connection.
3	Route the optical patch cord down the left-hand vertical rack rail.
4	Connect the other SC-end of the SC-SC patch cord to the patch panel port labeled “CPE Fm TX”, routing the fiber from the left.
5	Connect an SC-end of another SC-SC optical patch cord to the RX backbone connection.
6	Route the optical patch cord down the left-hand vertical rack rail.
7	Connect the other SC-end of the SC-SC patch cord to the patch panel port labeled “CPE To RX”, routing the fiber from the left.

—end—

Procedure 3-43
Connecting DSCM Trays to optical components

Follow this procedure to connect a DSCM Tray to other components.

> ***Note:*** Refer to the figures in the chapter "Preparing to connect optical components" in part 1 of this document for the types of components that the DSCM Trays need to connect to. Follow procedures for connecting adjacent upstream components for signals entering the DSCM Trays.

Generic site configurations are illustrated in "Preparing to connect optical components". Not all components will be present at each site. The custom link engineering output includes site fibering diagrams which show the specific site configurations for your application

Requirements

Before you begin this procedure make sure

- all connectors are clean. For information on cleaning, see "Cleaning connectors" in *Installing Optical Metro 5200 Shelves and Components*, 323-1701-201.
- if you are connecting to a series of OMXs, you know the east-most and west-most OMX. Refer to "Guidelines for determining the east-most and west-most OMXs in a series of interconnected OMXs" in part 1 of this document.
- you are familiar with the methods to access connectors in the components you are connecting. Refer to "Accessing internal connectors" in part 1 of this document.
- you are familiar with fiber routing procedures. For fiber routing procedures for 5200 shelf components, refer to the "Fiber management" chapter in *Installing Optical Metro 5200 Shelves and Components*, 323-1701-201.
- you refer to the following tables to determine the connections you must make according to your site type.
- you have completed all installation procedures.

—continued—

Procedure 3-43 (continued)
Connecting DSCM Trays to optical components

Table 3-98 is a summary of the tables in this procedure.

Table 3-98
Summary table

DSCM Tray fibering method for	Refer to
OADM and Terminal Topology with PBE	Table 3-99 on page 3-304
OADM and Terminal Topology with APBE	Table 3-100 on page 3-305
Line Amplifier Topology with PBE	Table 3-101 on page 3-305
Line Amplifier Topology with APBE	Table 3-102 on page 3-306

Table 3-99
OADM and Terminal Topology with PBE

From	To				
DSCM	**OMX (1st west/east-facing)**	**PBE**	**Discrete VOA**	**HIP or OFA filler card**	**OFA VGA**
IN	—	C (or L) BAND OUT	VOA A/B OUT	OUT	— (see Note 2)
			—	—	OUT
OUT	OTS IN	—	—	IN (see Note 1)	—
				—	IN (see Note 1 & 2)

Note 1: Run the patch cord to the OFA slot position but do not connect it to the OFA IN port. You will connect the patch cord to the OFA IN port during the equalization procedures.

Note 2: The OFA VGA has an integrated eVOA (electrically controlled variable optical attenuator). For this reason, a VOA is not required when an OFA VGA is used. An equalizer (PBE, APBE) may still be required.

—continued—

Procedure 3-43 (continued)
Connecting DSCM Trays to optical components

Table 3-100
OADM and Terminal Topology with APBE

From	To				
DSCM	**OMX (1st west/east-facing)**	**APBE**	**Discrete VOA**	**HIP or OFA filler card**	**OFA VGA**
IN	OTS OUT	—	VOA A/B OUT	OUT	— (see Note 2)
			—	—	OUT
OUT	OTS IN	IN	—	IN (see Note1)	—
			—	—	IN (see Note 1 & 2)

Note 1: Run the patch cord to the OFA slot position but do not connect it to the OFA IN port. You will connect the patch cord to the OFA IN port during the equalization procedures.

Note 2: The OFA VGA has an integrated eVOA (electrically controlled variable optical attenuator). For this reason, a VOA is not required when an OFA VGA is used. An equalizer (PBE, APBE) may still be required.

Table 3-101
Line Amplifier Topology with PBE

From	To			
DSCM	**PBE**	**Discrete VOA**	**HIP or OFA filler card**	**OFA VGA**
IN	C (or L) BAND OUT	VOA A/B OUT	OUT	— (see Note 2)
		—	—	OUT
OUT	—	—	IN (see Note1)	—
			—	IN (see Note 1 & 2)

Note 1: Run the patch cord to the OFA slot position but do not connect it to the OFA IN port. You will connect the patch cord to the OFA IN port during the equalization procedures.

Note 2: The OFA VGA has an integrated eVOA (electrically controlled variable optical attenuator). For this reason, a VOA is not required when an OFA VGA is used. An equalizer (PBE, APBE) may still be required.

—continued—

Procedure 3-43 (continued)
Connecting DSCM Trays to optical components

Table 3-102
Line Amplifier Topology with APBE

From	To			
DSCM	**APBE**	**Discrete VOA**	**HIP or OFA filler card**	**DSCM**
IN	—	VOA A/B OUT	OUT	— (see Note 2)
		—	—	OUT
OUT	IN	—	IN (see Note1)	—
			—	IN (see Note 1 & 2)

Note 1: Run the patch cord to the OFA slot position but do not connect it to the OFA IN port. You will connect the patch cord to the OFA IN port during the equalization procedures.

Note 2: The OFA VGA has an integrated eVOA (electrically controlled variable optical attenuator). For this reason, a VOA is not required when an OFA VGA is used. An equalizer (PBE, APBE) may still be required.

Table 3-103 lists the tools and materials required to complete this procedure.

Table 3-103
Required tools and materials

Item	Quantity	Supplied
Antistatic wrist and heel straps	1	no
Fiber-optic cleaning kit	1	no
Fiber inspection scope	1	no
SC-SC Optical patch cords (see Note) (except when connecting to an APBE circuit pack)	as required	no
SC-LC Optical patch cords (see Note) (when connecting to an APBE circuit pack)	as required	no

Note: Refer to "Fiber-optic patch cords" in *Network Planning and Link Engineering*, 323-1701-110.

—continued—

Procedure 3-43 (continued)
Connecting DSCM Trays to optical components

Precautions

DANGER
Invisible laser radiation
The Optical Metro 5100/5200 operates up to a Hazard Level of k x 3A (IEC 60825-2:2000) or 1M (IEC 60825-2:2004). Use only viewing instruments with proper optical attenuation.

CAUTION
Risk of affecting network reliability
Make sure that all connectors are cleaned before you make the connections (or re-connections) described in this procedure. For cleaning information, see the chapter "Cleaning connectors", in *Installing Optical Metro 5200 Shelves and Components*, 323-1701-201.

CAUTION
Possible risk of damage to equipment and fiber
Observe the minimum bend radius of 1.18 inches (30 mm) for the patch cords. Always use the fiber management components in the drawer to route the fiber.

Allow for sufficient slack in the fibers that enter and exit the drawers. If sufficient slack is not left, the fibers can become stretched and damaged when the drawer is opened.

—continued—

Procedure 3-43 (continued)
Connecting DSCM Trays to optical components

Action

Step	Action
1	Refer to Table 3-98 at the beginning of this procedure to determine the connections you must make.
2	Locate the DSCM Tray and the other applicable components in the rack. Refer to the "Accessing internal connectors" chapter to access DSCM Tray connectors and refer to document to access all other the connectors.
3	Open the DSCM Tray drawer and connect one end of a patch cord to make the optical connection from the DSCM Tray.
4	Route the fiber.

If you are connecting to	**Then** go to
an OFA	step 7
any other component	step 5

5	Connect the other end of the patch cord to complete the optical connection to the other component.
6	Go to step 8.
7	Run the other end of the patch cord to the OFA slot position but do not connect it to the OFA IN port. This will be done during the equalization procedures.
8	Close the DSCM Tray draw.

—end—

Procedure 3-44
Installing an attenuator at the BAND ADD port in a DWDM OMX

Follow this procedure to install an attenuator in a DWDM OMX to attenuate signals at a band level in the add direction.

In amplified networks with distributed equalization, you can follow this procedure to install attenuators in OMXs in order to equalize bands.

The label for the band add port varies, depending on the type of OMX, see Table 3-104.

Table 3-104
OMX band add port labels

OMX type	Band add port label
DWDM (Standard)	BAND ADD
DWDM OMX 4 CH + Fiber Manager or OMX 4 CH Enhanced	BAND TX

Requirements

Before you begin this procedure make sure

- all connectors are clean. For information on cleaning, see"Cleaning connectors" in *Installing Optical Metro 5200 Shelves and Components*, 323-1701-201.
- your network planning group has provided you with information regarding attenuator requirements.

Table 3-105 lists the tools and materials required to complete the procedure.

Table 3-105
Required tools and materials

Item	Quantity	Supplied
Antistatic wrist and heel straps	1	no
Fiber-optic cleaning kit	1	no
Fiber inspection scope	1	no
Phillips #1 screwdriver required only if OMX type is DWDM (Standard)	1	no
SC type attenuator	1	no

—continued—

Procedure 3-44 (continued)
Installing an attenuator at the BAND ADD port in a DWDM OMX

Precautions

DANGER
Invisible laser radiation
The Optical Metro 5100/5200 operates up to a Hazard Level of k x 3A (IEC 60825-2:2000) or 1M (IEC 60825-2:2004). Use only viewing instruments with proper optical attenuation.

CAUTION
Risk of affecting network reliability
Make sure that all connectors are cleaned before you make the connections (or re-connections) described in this procedure. For cleaning information, see the chapter "Cleaning connectors", in *Installing Optical Metro 5200 Shelves and Components*, 323-1701-201.

CAUTION
Possible risk of damage to equipment and fiber
Make sure that the bulkhead connectors are lowered and snapped into place before you close the drawers. Failure to do so could cause damage to the connector unit, the fibers attached to the connector unit, or both.

Observe the minimum bend radius of 1.18 inches (30 mm) for the patch cords. Always use the fiber management components in the drawer to route the fiber.

Allow for sufficient slack in the fibers that enter and exit the drawers. If sufficient slack is not left, the fibers can become stretched and damaged when the drawer is opened.

—continued—

Procedure 3-44 (continued)
Installing an attenuator at the BAND ADD port in a DWDM OMX

Action

Step	Action
1	Refer to the chapter "Accessing internal connectors" in part 1 of this document to access the connectors in the OMX.
2	Disconnect the patch cord from the band add port connector. The label for the band add port varies according to the type of OMX. Refer to Table 3-104 on page 3-309 for the applicable label.
3	Connect the attenuator into the band add port.
4	Connect the patch cord you disconnected in step 2 into the other end of the attenuator. • Figure 3-54 on page 3-312 shows the installed attenuator in a DWDM OMX (Standard) • Figure 3-55 on page 3-313 shows the installed attenuator in a DWDM OMX 4CH + Fiber Manager or OMX 4 CH Enhanced
5	**If** you are connecting to / **Then** an OMX (Standard) / go to step 6 any other OMX type / close the connector bulkhead by pressing down on the tab. Go to step 6.
6	Close the drawer.

—end—

Figure 3-54
DWDM OMX (Standard) with attenuator installed

OM2093p

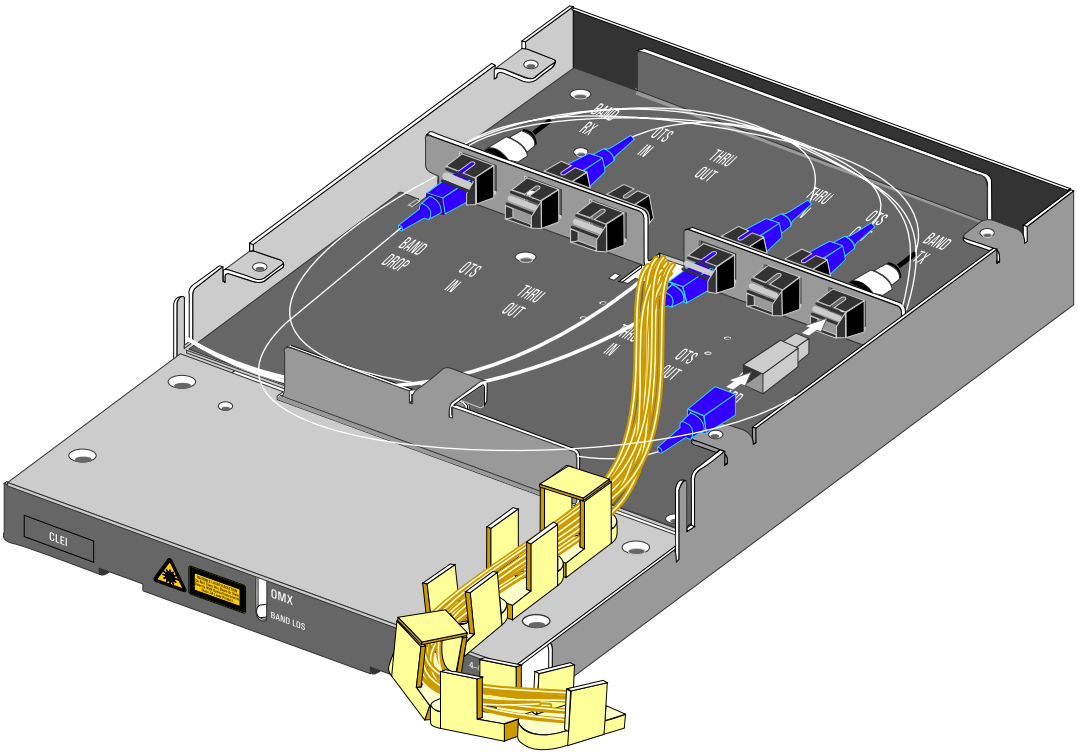

Figure 3-55
DWDM OMX 4CH + Fiber Manager or OMX 4 CH Enhanced with attenuator installed

OM2091p

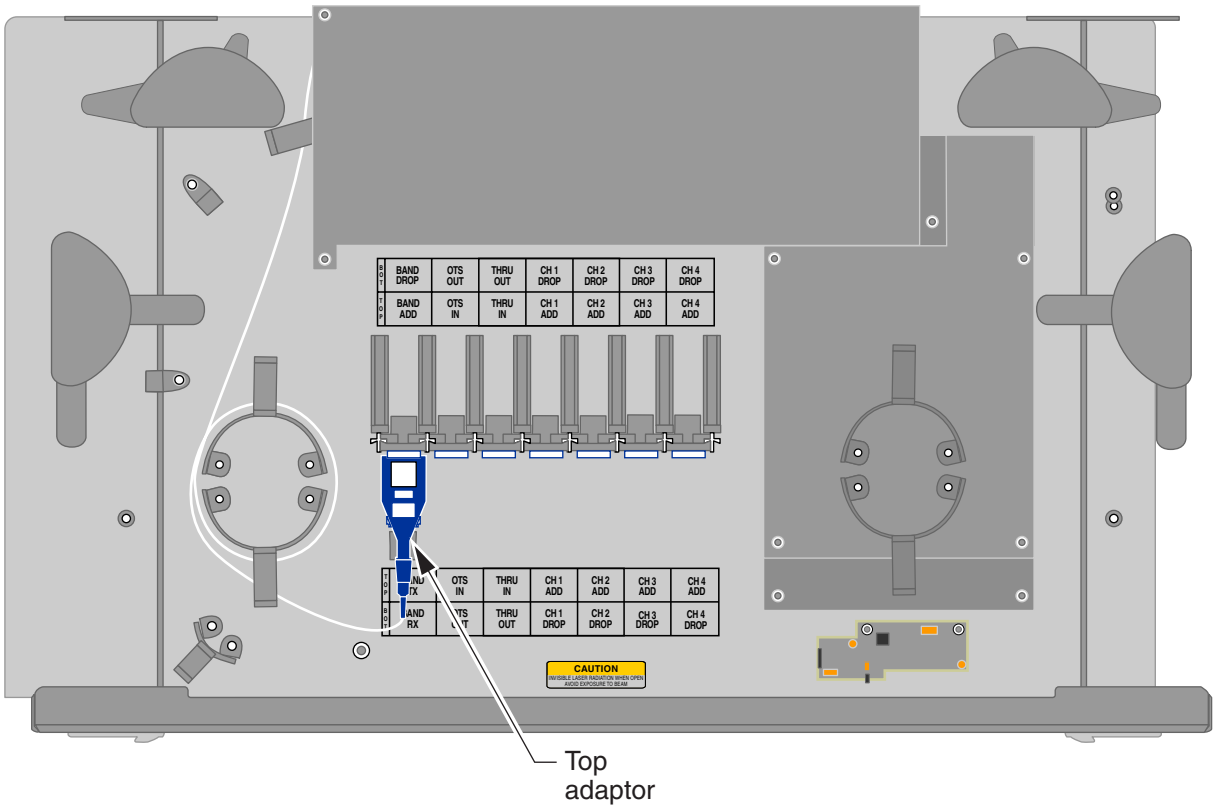

Procedure 3-45
Installing an attenuator at the BAND DROP port in a CWDM or DWDM OMX

Follow this procedure to install an attenuator in a CWDM or DWDM OMX to attenuate signals at a band level in the drop direction to avoid OCLD or OTR Rx overload.

To install an attenuator in an ITU CWDM OMX, follow Procedure 3-46 "Installing an attenuator at the OTS IN port in an OMX ITU CWDM".

The label for the band drop port varies, depending on the type of OMX, see Table 3-106.

Table 3-106
OMX band drop port labels

OMX type	Band drop port label
DWDM (Standard)	BAND DROP
DWDM OMX 4CH + Fiber Manager or OMX 4 CH Enhanced	BAND RX
OMX 4CH CWDM	BAND # DROP
OMX 1CH CWDM	BAND DROP

Requirements

Before you begin this procedure make sure:

- all connectors are clean. For information on cleaning, see "Cleaning connectors" in *Installing Optical Metro 5200 Shelves and Components*, 323-1701-201.
- your network planning group has provided you with information regarding attenuator requirements.

—continued—

Procedure 3-45 (continued)
Installing an attenuator at the BAND DROP port in a CWDM or DWDM OMX

Table 3-107 lists the tools and materials required to complete the procedure.

Table 3-107
Required tools and materials

Item	Quantity	Supplied
Antistatic wrist and heel straps	1	no
Fiber-optic cleaning kit	1	no
Fiber inspection scope	1	no
Phillips #1 screwdriver required only if OMX type is DWDM (Standard)	1	no
SC-type attenuator	1	no

Precautions

DANGER
Invisible laser radiation
The Optical Metro 5100/5200 operates up to a Hazard Level of k x 3A (IEC 60825-2:2000) or 1M (IEC 60825-2:2004). Use only viewing instruments with proper optical attenuation.

CAUTION
Risk of affecting network reliability
Make sure that all connectors are cleaned before you make the connections (or re-connections) described in this procedure. For cleaning information, see the chapter "Cleaning connectors", in *Installing Optical Metro 5200 Shelves and Components*, 323-1701-201.

CAUTION
Possible risk of damage to equipment and fiber
Make sure that the bulkhead connectors are lowered and snapped into place before you close the drawers. Failure to do so could cause damage to the connector unit, the fibers attached to the connector unit, or both. Observe the minimum bend radius of 1.18 inches (30 mm) for the patch cords. Always use the fiber management components in the drawer to route the fiber. Allow for sufficient slack in the fibers that enter and exit the drawers. If sufficient slack is not left, the fibers can become stretched and damaged when the drawer is opened.

—continued—

Procedure 3-45 (continued)
Installing an attenuator at the BAND DROP port in a CWDM or DWDM OMX

Action

Step	Action
1	Refer to the chapter "Accessing internal connectors" in part 1 of this document to access the connectors in the OMX.
2	Disconnect the patch cord from the band drop port connector. The label for the band drop port varies according to the type of OMX. Refer to Table 3-106 on page 3-314 for the applicable label.
3	Connect the attenuator into the band drop port.
4	Connect the patch cord you disconnected in step 2 into the other end of the attenuator. • Figure 3-56 on page 3-317 shows the installed attenuator in a OMX 4CH CWDM • Figure 3-57 on page 3-318 shows the installed attenuator in a OMX 1CH CWDM • Figure 3-58 on page 3-319 shows the installed attenuator in a DWDM OMX (Standard) • Figure 3-59 on page 3-320 shows the installed attenuator in a DWDM OMX 4CH + Fiber Manager or OMX 4 CH Enhanced
5	**If** you are connecting to / **Then** an OMX (Standard) / go to step 6 any other OMX type / close the connector bulkhead by pressing down on the tab. Go to step 6.
6	Close the drawer.

—end—

Figure 3-56
Installed band drop attenuator in a OMX 4CH CWDM

OM2097p

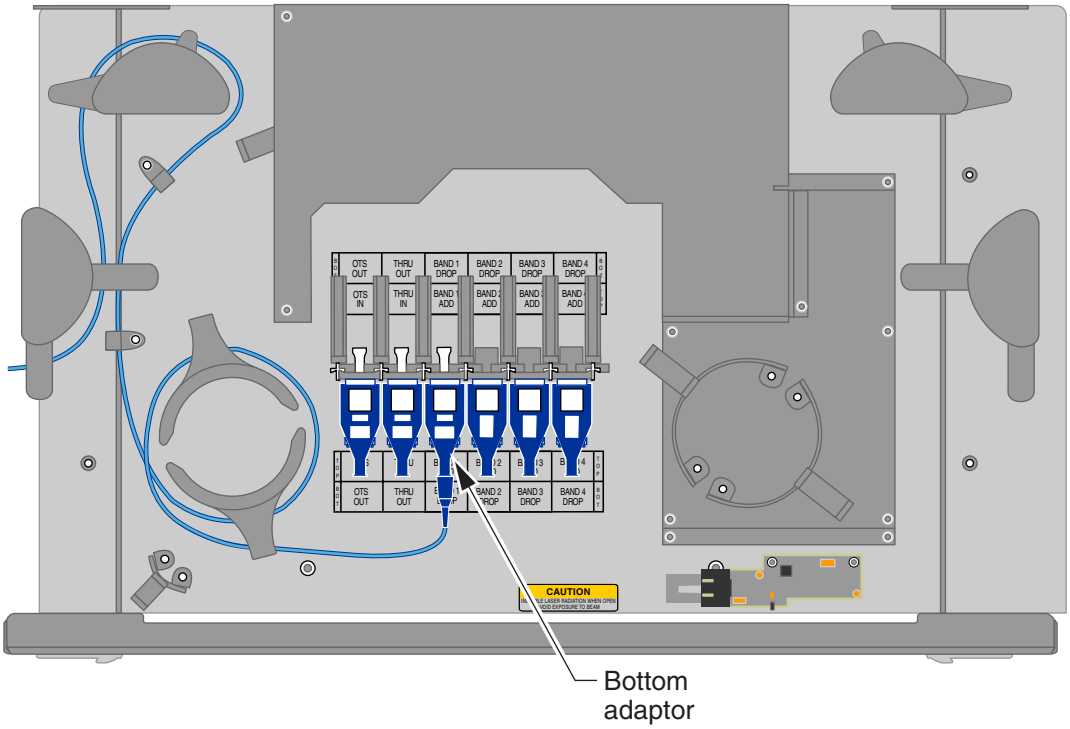

Figure 3-57
Installed band drop attenuator in a OMX 1CH CWDM

OM2099p

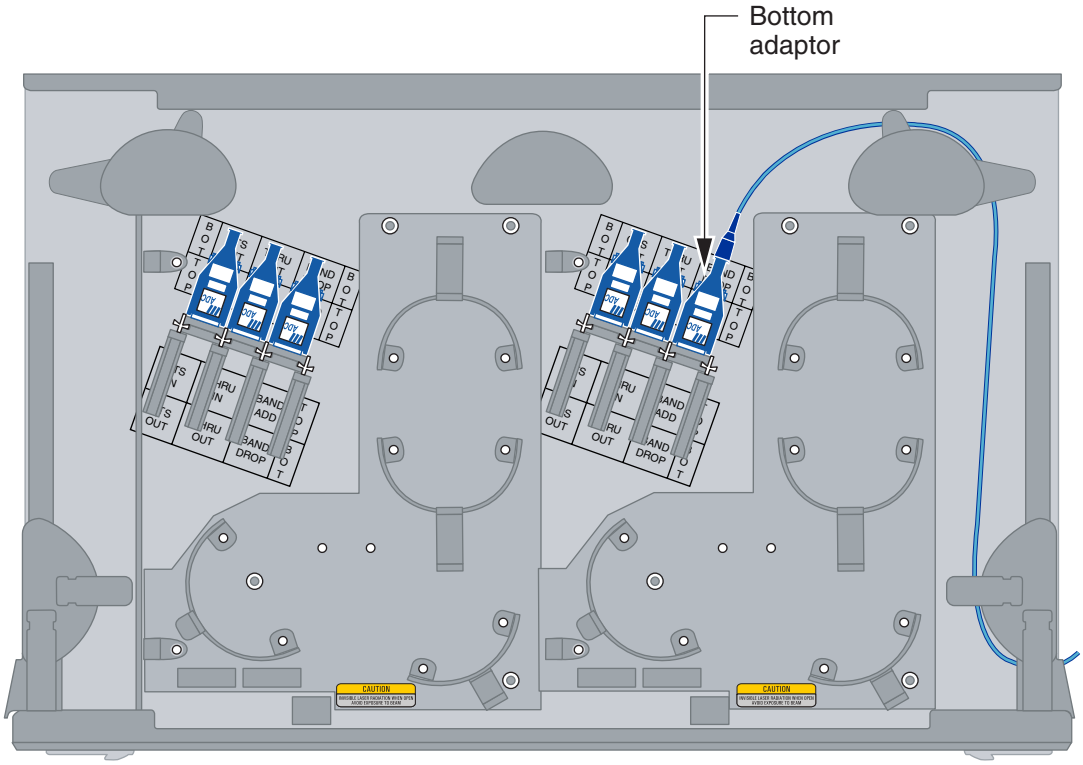

Figure 3-58
Installed band drop attenuator in a DWDM OMX (Standard) tray

OM0118p

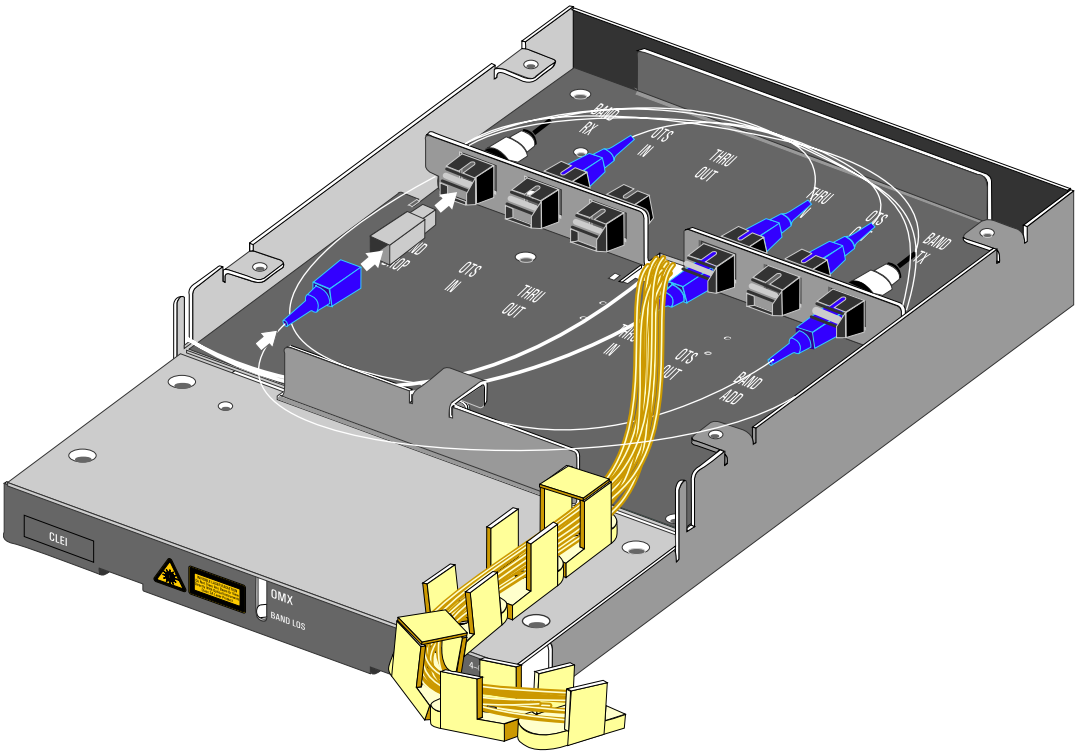

Figure 3-59
Installed band drop attenuator in a DWDM OMX 4CH + Fiber Manager or OMX 4 CH Enhanced

OM2090p

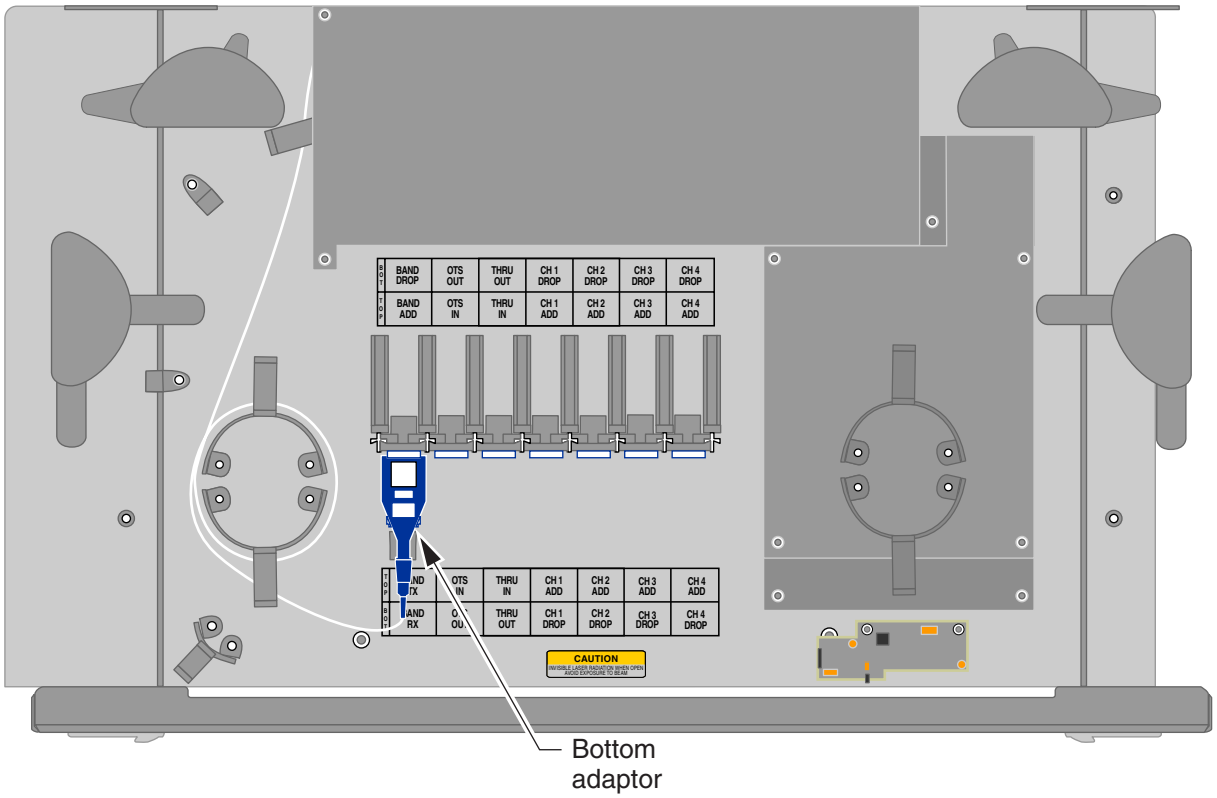

Procedure 3-46
Installing an attenuator at the OTS IN port in an OMX ITU CWDM

Follow this procedure to install an attenuator in an OMX ITU CWDM to attenuate signals in the drop direction to avoid OCLD or OTR Rx overload. To install an attenuator in a CWDM or DWDM OMX, follow Procedure 3-45 "Installing an attenuator at the BAND DROP port in a CWDM or DWDM OMX".

Requirements

Before you begin this procedure make sure:

- all connectors are clean. For information on cleaning, see "Cleaning connectors" in *Installing Optical Metro 5200 Shelves and Components*, 323-1701-201.
- your network planning group has provided you with information regarding attenuator requirements.

Table 3-108 lists the tools and materials required to complete the procedure.

Table 3-108
Required tools and materials

Item	Quantity	Supplied
Antistatic wrist and heel straps	1	no
Fiber-optic cleaning kit	1	no
Fiber inspection scope	1	no
SC-type attenuator	1	no

—continued—

Procedure 3-46 (continued)
Installing an attenuator at the OTS IN port in an OMX ITU CWDM

Precautions

DANGER
Invisible laser radiation
The Optical Metro 5100/5200 operates up to a Hazard Level of k x 3A (IEC 60825-2:2000) or 1M (IEC 60825-2:2004). Use only viewing instruments with proper optical attenuation.

CAUTION
Risk of affecting network reliability
Make sure that all connectors are cleaned before you make the connections (or re-connections) described in this procedure. For cleaning information, see the chapter "Cleaning connectors", in *Installing Optical Metro 5200 Shelves and Components*, 323-1701-201.

CAUTION
Possible risk of damage to equipment and fiber
Make sure that the bulkhead connectors are lowered and snapped into place before you close the drawers. Failure to do so could cause damage to the connector unit, the fibers attached to the connector unit, or both.

Observe the minimum bend radius of 1.18 inches (30 mm) for the patch cords. Always use the fiber management components in the drawer to route the fiber.

Allow for sufficient slack in the fibers that enter and exit the drawers. If sufficient slack is not left, the fibers can become stretched and damaged when the drawer is opened.

—continued—

Procedure 3-46 (continued)
Installing an attenuator at the OTS IN port in an OMX ITU CWDM

Action

Step	Action
1	Refer to the chapter "Accessing internal connectors" in part 1 of this document.
2	Disconnect the patch cord from the OTS IN port connector.
3	Connect the attenuator into the OTS IN port.
4	Connect the patch cord you disconnected in step 2 into the other end of the attenuator.
5	Close the connector bulkhead by pressing down on the tab, and close the drawer.

—end—

Procedure 3-47
Installing an LC-LC attenuator at the channel port in an OMX 16CH DWDM

Follow this procedure to install an LC-LC attenuator in an OMX 16CH DWDM to attenuate signals at a channel add or drop direction.

> ***Note:*** Use LC-LC attenuators for direct padding on the OMX 16CH DWDM slider adapters. Place the LC-LC attenuators between the OMX 16CH DWDM slider adapter and the internal side of the fiber, see Figure 3-60 on page 3-327. Do not place LC-LC attenuators on the client side of the fiber.

Requirements

Before you begin this procedure make sure

- all connectors are clean. For information on cleaning, see "Cleaning connectors" in *Installing Optical Metro 5200 Shelves and Components*, 323-1701-201
- your network planning group has provided you with information regarding attenuator requirements

Table 3-109 lists the tools and materials required to complete the procedure.

Table 3-109
Required tools and materials

Item	Quantity	Supplied
Antistatic wrist and heel straps	1	no
Fiber-optic cleaning kit	1	no
Fiber inspection scope	1	no
Phillips #2 screwdriver	1	no
LC-LC attenuator	1	no

—continued—

Procedure 3-47 (continued)
Installing an LC-LC attenuator at the channel port in an OMX 16CH DWDM

Precautions

DANGER
Invisible laser radiation
The Optical Metro 5100/5200 operates up to a Hazard Level of k x 3A (IEC 60825-2:2000) or 1M (IEC 60825-2:2004). Use only viewing instruments with proper optical attenuation.

CAUTION
Risk of affecting network reliability
Make sure that all connectors are cleaned before you make the connections (or re-connections) described in this procedure. For cleaning information, see the chapter "Cleaning connectors", in *Installing Optical Metro 5200 Shelves and Components*, 323-1701-201.

CAUTION
Possible risk of damage to equipment and fiber
Make sure that the sliders are pushed fully to the rear before closing the front cover. Failure to do so could cause damage to the connector unit, the fibers attached to the connector unit, or both.

Observe the minimum bend radius of 1.18 inches (30 mm) for the patch cords. Always use the fiber management components in the drawer to route the fiber.

Allow for sufficient slack in the fibers that enter and exit the drawers. If sufficient slack is not left, the fibers can become stretched and damaged when the drawer is opened.

—continued—

Procedure 3-47 (continued)
Installing an LC-LC attenuator at the channel port in an OMX 16CH DWDM

Action

Step	Action
1	Refer to the procedure "Accessing connectors in an OMX 16CH DWDM" in part 1 of this document to access the connectors in the OMX 16CH DWDM.
2	Pull out the appropriate slider adapter and locate the appropriate port connectors.
3	**If** you are connecting to a channel — **Then** go to Add port — step 4 Drop port — step 8
4	**If** you are attenuating — **Then** Band 1 or 2 — Disconnect the right-hand side channel Add port connector. any other Band — Disconnect the left-hand side channel Add port connector.
5	Connect the patch cord you disconnected into the end of the LC-LC attenuator as shown in Figure 3-61 on page 3-327. ***Note:*** Figure 3-61 on page 3-327 is an example only, it shows an LC-LC attenuator being connected to a channel Drop port.
6	Insert the other end of the LC-LC attenuator into the channel Add port.
7	Go to step 11.
8	**If** you are attenuating — **Then** Band 1 or 2 — Disconnect the right-hand side channel Drop port connector. any other Band — Disconnect the left-hand side channel Drop port connector.
9	Connect the patch cord you disconnected into the end of the LC-LC attenuator as shown in Figure 3-61 on page 3-327. ***Note:*** Figure 3-61 on page 3-327 is an example only, it shows an LC-LC attenuator being connected to a channel Drop port.
10	Insert the other end of the LC-LC attenuator into the channel Drop port.
11	Fully push the slider back in.
12	Close the front cover.

—end—

Figure 3-60
Installed LC-LC attenuator

om2644t

Figure 3-61
Installing the LC-LC attenuator on a channel drop port

om2645t

Procedure 3-48
Installing an attenuator at the input of an OFA circuit pack

Follow this procedure to install an SC-type attenuator at the IN port of an OFA circuit pack.

Requirements

Before you begin this procedure make sure:

- all connectors are clean. For information on cleaning, see "Cleaning connectors" in *Installing Optical Metro 5200 Shelves and Components*, 323-1701-201.
- your network planning group has provided you with information regarding attenuator requirements.

Table 3-110 lists the tools and materials required to complete the procedure.

Table 3-110
Required tools and materials

Item	Quantity	Supplied
Antistatic wrist and heel straps	1	no
Fiber-optic cleaning kit	1	no
Fiber inspection scope	1	no
SC-type attenuator	1	no

—continued—

Procedure 3-48 (continued)
Installing an attenuator at the input of an OFA circuit pack

Precautions

DANGER
Invisible laser radiation
The Optical Metro 5100/5200 operates up to a Hazard Level of k x 3A (IEC 60825-2:2000) or 1M (IEC 60825-2:2004). Use only viewing instruments with proper optical attenuation.

CAUTION
Risk of affecting network reliability
Make sure that all connectors are cleaned before you make the connections (or re-connections) described in this procedure. For cleaning information, see the chapter "Cleaning connectors", in *Installing Optical Metro 5200 Shelves and Components*, 323-1701-201.

Action

Step	Action
1	Identify the OFA on which you must install the attenuator.
2	Locate the IN port on the outside of the faceplate of the OFA and disconnect all the patch cords.
3	Connect the attenuator to the OFA IN port.
4	Connect the patch cord you disconnected in step 2 into the other end of the attenuator.

—end—

Procedure 3-49
Installing an attenuator at the output of an OFA circuit pack

Follow this procedure to install an SC-type attenuator at the OUT port of an OFA circuit pack.

Requirements

Before you begin this procedure make sure:

- all connectors are clean. For information on cleaning, see "Cleaning connectors" in *Installing Optical Metro 5200 Shelves and Components*, 323-1701-201.
- your network planning group has provided you with information regarding attenuator requirements.

Table 3-111 lists the tools and materials required to complete the procedure.

Table 3-111
Required tools and materials

Item	Quantity	Supplied
Antistatic wrist and heel straps	1	no
Fiber-optic cleaning kit	1	no
Fiber inspection scope	1	no
SC-type attenuator	1	no

—continued—

Procedure 3-49 (continued)
Installing an attenuator at the output of an OFA circuit pack

Precautions

DANGER
Invisible laser radiation
The Optical Metro 5100/5200 operates up to a Hazard Level of k x 3A (IEC 60825-2:2000) or 1M (IEC 60825-2:2004). Use only viewing instruments with proper optical attenuation.

CAUTION
Risk of affecting network reliability
Make sure that all connectors are cleaned before you make the connections (or re-connections) described in this procedure. For cleaning information, see the chapter "Cleaning connectors", in *Installing Optical Metro 5200 Shelves and Components*, 323-1701-201.

Action

Step	Action
1	Identify the OFA on which you must install the attenuator.
2	Locate the OUT port on the outside of the faceplate of the OFA and disconnect any patch cord.
3	Connect the attenuator to the OFA OUT port.
4	Connect the patch cord you disconnected in step 2 into the other end of the attenuator.

—end—

Procedure 3-50
Installing an attenuator at the add port in an OSC tray

Follow this procedure to install an attenuator in an OSC tray to attenuate an OSC signal in the add direction.

Requirements

Before you begin this procedure make sure

- all connectors are clean. For information on cleaning, see "Cleaning connectors" in *Installing Optical Metro 5200 Shelves and Components*, 323-1701-201.
- your network planning group has provided you with information regarding attenuator requirements. For information about attenuating an OSC signal, see the "Link engineering rules" chapter in *Network Planning and Link Engineering*, 323-1701-110.

Table 3-112 lists the tools and materials required to complete the procedure.

Table 3-112
Required tools and materials

Item	Quantity	Supplied
Antistatic wrist and heel straps	1	no
Fiber-optic cleaning kit	1	no
Fiber inspection scope	1	no
SC-type attenuator	1	no

—continued—

Procedure 3-50 (continued)
Installing an attenuator at the add port in an OSC tray

Precautions

DANGER
Invisible laser radiation
The Optical Metro 5100/5200 operates up to a Hazard Level of k x 3A (IEC 60825-2:2000) or 1M (IEC 60825-2:2004). Use only viewing instruments with proper optical attenuation.

CAUTION
Risk of affecting network reliability
Make sure that all connectors are cleaned before you make the connections (or re-connections) described in this procedure. For cleaning information, see the chapter "Cleaning connectors", in *Installing Optical Metro 5200 Shelves and Components*, 323-1701-201.

CAUTION
Possible risk of damage to equipment and fiber
Make sure that the bulkhead connectors are lowered and snapped into place before you close the drawers. Failure to do so could cause damage to the connector unit, the fibers attached to the connector unit, or both.

Observe the minimum bend radius of 1.18 inches (30 mm) for the patch cords. Always use the fiber management components in the drawer to route the fiber.

Allow for sufficient slack in the fibers that enter and exit the drawers. If sufficient slack is not left, the fibers can become stretched and damaged when the drawer is opened.

—continued—

Procedure 3-50 (continued)
Installing an attenuator at the add port in an OSC tray

Action

Step	Action
1	Refer to Procedure 1-9 “Accessing connectors in an OSC tray” in part 1 of this document to access the connectors in the OSC.
2	Locate the OSC module (east or west) that requires the attenuator.
3	Locate the OSC ADD port and disconnect any patch cord.
4	Connect the attenuator into the OSC ADD port.
5	Connect the patch cord you disconnected in step 3 into the other end of the attenuator.
6	Close the OSC drawer.

—end—

Procedure 3-51
Installing a Mode-Conditioning Plug

Follow this procedure to install a mode-conditioning (MC) plug.

> ***Note:*** MC plugs should only be used on the patch panel. If a MC plug is placed directly on the input or output of the circuit pack, you will not be able to close the shelf cover.

Requirements

Before you begin this procedure make sure

- all connectors are clean. For information on cleaning, see "Cleaning connectors" in *Installing Optical Metro 5200 Shelves and Components*, 323-1701-201.
- you are familiar with how to access connectors in an NT0H43CA or NT0H43CB patch panel. See Procedure 1-16, "Accessing connectors in a patch panel" in part 1 of this document.

Table 3-113 lists the tools and materials required to complete the procedure.

Table 3-113
Required tools and materials

Item	Quantity	Supplied
Antistatic wrist and heel straps	1	no
Fiber-optic cleaning kit	1	no
Fiber inspection scope	1	no
mode-conditioning plug	1	no

—continued—

Procedure 3-51 (continued)
Installing a Mode-Conditioning Plug

Precautions

DANGER
Invisible laser radiation
The Optical Metro 5100/5200 operates up to a Hazard Level of k x 3A (IEC 60825-2:2000) or 1M (IEC 60825-2:2004). Use only viewing instruments with proper optical attenuation.

CAUTION
Risk of affecting network reliability
Make sure that all connectors are cleaned before you make the connections (or re-connections) described in this procedure. For cleaning information, see the chapter "Cleaning connectors", in *Installing Optical Metro 5200 Shelves and Components*, 323-1701-201.

CAUTION
Possible risk of damage to equipment and fiber
Mode-conditioning plugs should be connected at the patch panel. Do not connect the mode-conditioning plug directly on the input or output of a circuit pack as you will not be able to close the front cover without damaging the MC plug, fiber and connector.

Observe the minimum bend radius of 1.18 inches (30 mm) for the patch cords. Always use the fiber management components in the drawer to route the fiber.

Allow for sufficient slack in the fibers that enter and exit the drawers. If sufficient slack is not left, the fibers can become stretched and damaged when the drawer is opened.

—continued—

Procedure 3-51 (continued)
Installing a Mode-Conditioning Plug

Action

Step	Action

1 Refer to the following table to determine the connections you must make.

Subtending equipment port label	Patch panel port label	Patch panel port label	Nortel client equipment port
RX	CPE To RX	NORTEL Fm TX	TX (see Note)
TX	CPE Fm TX	NORTEL To RX	RX
Note: The Nortel client transmitter (TX) is typically 1310 nm. The MC plug connects at the patch panel between the NORTEL Fm TX and CPE To RX ports.			

2 Open and fully extend the drawer of the NT0H43CA, NT0H43CB patch panel.

3 Insert the mode-conditioning plug to the patch panel port labelled “NORTEL Fm TX”.

4 Using an appropriate patch cord connect the mode-conditioning plug to the Nortel client equipment Tx port.

5 Using an appropriate patch cord connect the patch panel port labelled “CPE To RX” to the subtending equipment port labelled client Rx.

Note: Ensure that the signal strength is within the subtending equipment client Rx specifications.

6 Using an appropriate patch cord connect the patch panel port labelled “CPE Fm TX” to the subtending equipment port labelled client Tx.

7 Using an appropriate patch cord connect the patch panel port labelled “NORTEL To RX” to the Nortel equipment port labelled client Rx.

Note: Ensure that the signal strength is within the Nortel equipment client Rx specifications.

8 Close the patch panel drawer.

—end—

Nortel

Optical Metro 5100/5200

Connection Procedures, Part 2 of 2

Copyright © 2000–2005 Nortel, All Rights Reserved

The information contained herein is the property of Nortel and is strictly confidential. Except as expressly authorized in writing by Nortel, the holder shall keep all information contained herein confidential, shall disclose the information only to its employees with a need to know, and shall protect the information, in whole or in part, from disclosure and dissemination to third parties with the same degree of care it uses to protect its own confidential information, but with no less than reasonable care. Except as expressly authorized in writing by Nortel, the holder is granted no rights to use the information contained herein.

This information is provided “as is”, and Nortel Networks does not make or provide any warranty of any kind, expressed or implied, including any implied warranties of merchantability, non-infringement of third party intellectual property rights, and fitness for a particular purpose.

Nortel, the Nortel logo, the Globemark, and OPTera are trademarks of Nortel Networks.

HP and HP-UX are trademarks of Hewlett-Packard, Inc. Pentium is a trademark of Intel Corporation. Internet Explorer, Windows, and Windows NT are trademarks of Microsoft Corporation. Netscape Communicator is a trademark of Netscape Communications Corporation. Common Desktop Environment, Java, Solaris, and Ultra are trademarks of Sun Microsystems, Inc. UNIX is a trademark of X/Open Company Limited.

323-1701-221
Standard Release 8.0 Issue 1
April 2005
Printed in Canada and the United Kingdom