NT0H65AM **323-1701-542**

Nortel

Optical Metro 5100/5200

Trouble Clearing and Alarm Reference Guide, Part 3 of 4

Standard Release 8.0 Issue 1 April 2005

What's inside...

Clearing shelf and SP alarms, **Clearing PM alarms**, **Clearing OSC alarms**, **Clearing OTR alarms**

See Part 1 for the following:

Troubleshooting the Optical Metro 5100/5200, **Troubleshooting fault sectionalization and System Level Equalization Control**, **Alarm description**, **Installation troubleshooting procedures**, **Clearing OCI and OCI SRM alarms**, **Clearing OCI SRM GbE/FC and OCI SRM GbE alarms**, **Clearing OCM alarms**

See Part 2 for the following:

Clearing OCLD alarms, **Clearing OMX alarms**, **Clearing ECT/PBE alarms**, **Clearing OFA alarms**, **Clearing APBE alarms**

See Part 4 for the following:

Clearing Muxponder alarms, **Clearing C&L splitter/coupler alarms**, **Clearing equipment inventory unit alarms**, **Clearing 1310 nm splitter/coupler alarms**, **Clearing transponder protection tray alarms**, **Clearing discrete VOA alarms**, **Clearing security alarms**, **Troubleshooting the Enhanced Trunk Switch**, **Troubleshooting the Optical Trunk Switch**, **Clearing DSCM alarms**

NORTEL

Copyright © 2000–2005 Nortel Networks, All Rights Reserved

The information contained herein is the property of Nortel Networks and is strictly confidential. Except as expressly authorized in writing by Nortel Networks, the holder shall keep all information contained herein confidential, shall disclose the information only to its employees with a need to know, and shall protect the information, in whole or in part, from disclosure and dissemination to third parties with the same degree of care it uses to protect its own confidential information, but with no less than reasonable care. Except as expressly authorized in writing by Nortel Networks, the holder is granted no rights to use the information contained herein.

This information is provided “as is”, and Nortel Networks does not make or provide any warranty of any kind, expressed or implied, including any implied warranties of merchantability, non-infringement of third party intellectual property rights, and fitness for a particular purpose.

Nortel, the Nortel logo, the Globemark, and OPTera are trademarks of Nortel Networks.
HP and HP-UX are trademarks of Hewlett-Packard, Inc. Pentium is a trademark of Intel Corporation. Internet Explorer, Windows, and Windows NT are trademarks of Microsoft Corporation. Netscape Communicator is a trademark of Netscape Communications Corporation. Common Desktop Environment, Java, Solaris, and Ultra are trademarks of Sun Microsystems, Inc. UNIX is a trademark of X/Open Company Limited.
Printed in Canada and the United Kingdom

Contents

About this document vii

Audience for this document vii
Optical Metro 5100/5200 library vii
Technical assistance service telephone numbers x

Clearing shelf and SP alarms 13-1

List of procedures

13-1 Shelf—All Database Copies are Unavailable 13-4
13-2 Shelf—Automatic Laser Shutdown 13-7
13-3 Shelf—Breaker A Tripped, Breaker B Tripped 13-9
13-4 Shelf—Cooling Unit Failed/Missing 13-12
13-5 Shelf—Data Recovery Failure 13-14
13-6 Shelf—Database Redundancy is Unavailable 13-15
13-7 Shelf—DNS suffix mismatch 13-17
13-8 Shelf—Ethernet Port 10BaseT 1X Failure 13-18
13-9 Shelf—Ethernet Port 10BaseT 2X Failure 13-20
13-10 Shelf—Parallel Telemetry Scan Point 13-22
13-11 Shelf—Power Feed A Low/Missing, Power Feed B Low/Missing 13-27
13-12 Shelf—SBUS Failure 13-29
13-13 Shelf—Software Library Missing 13-30
13-14 Shelf—Software Library Transfer Incomplete 13-32
13-15 Shelf—Software Upgrade in Progress 13-33
13-16 Shelf—Temperature Out of Range 13-34
13-17 Shelf—Temperature Out of Range Warning 13-36
13-18 Shelf—VAC Failed/Missing 13-38
13-19 SP—Database Backup Failure 13-39
13-20 SP—Database Restore Failure 13-40
13-21 SP—Intrasite Communication Failure 13-41
13-22 SP—Software Below Baseline 13-43

Clearing PM alarms 14-1

List of procedures

14-1 Clearing facility PM alarms 14-7

Clearing OSC alarms 15-1

List of procedures

15-1 OSC—Circuit Pack Failed 15-6
15-2 OSC—Circuit Pack Missing 15-7
15-3 OSC—Duplicate Optical System Identifier 15-9
15-4 OSC—East/West Fiber Mismatch 15-11
15-5 OSC—East or West Overhead Link Failure, East or West Remote Overhead Link Failure 15-13
15-6 OSC—Facility Loopback 15-18
15-7 OSC—Fault Sectionalization Unresolved 15-19
15-8 OSC—Incomplete Provisioning 15-21
15-9 OSC—Inter-card Communication Failure 15-23
15-10 OSC—Intrasite Communication Failure 15-25
15-11 OSC—Invalid Data 15-27
15-12 OSC—Invalid Provisioning 15-30
15-13 OSC—Invalid Signal, Remote Invalid Signal 15-32
15-14 OSC—Loss of Frame, Remote Loss of Frame 15-37
15-15 OSC—Loss of Link 15-42
15-16 OSC—Loss of Signal, Remote Loss of Signal 15-44
15-17 OSC S/C—Optical Signal Failure (Rx) or (Tx) 15-49
15-18 OSC—Optical System Identifier Mismatch 15-53
15-19 OSC S/C—Optical Tray Mismatch 15-54
15-20 OSC S/C—Optical Tray Missing 15-57
15-21 OSC—Remote Fault Sectionalization Not Responding 15-59
15-22 OSC—Shelf Input Failure 15-62
15-23 OSC—Site Input Failure 15-65
15-24 OSC—Unequipped Remote Port 15-67
15-25 OSC—Unknown Circuit Pack 15-68
15-26 OSC—Wayside Alarm Indication Signal 15-70

Clearing OTR alarms 16-1

List of procedures

16-1 OTR—Alarm Indication Signal 16-6
16-2 OTR—Autoprovisioning Mismatch, Circuit Pack Mismatch 16-8
16-3 OTR—Automatic Switch to Protection Path active 16-12
16-4 OTR—Backward Defect Indication 16-13
16-5 OTR—Bit Error Rate (BER) Degrade 16-14
16-6 OTR—Circuit Pack Failed 16-22
16-7 OTR—Circuit Pack Minor Mismatch 16-24
16-8 OTR—Circuit Pack Missing 16-25
16-9 OTR—Far End Circuit Pack Mismatch 16-28
16-10 OTR—Facility Loopback 16-30
16-11 OTR—Fiber Mismatch 16-31
16-12 OTR—Forced Switch to East Path Active, Forced Switch to West Path Active 16-33
16-13 OTR—High Bit Error Rate 16-34
16-14 OTR—High Optical Power 16-38
16-15 OTR—High Optical Power Warning 16-50
16-16 OTR—Incompatible Optical System Identifier 16-60

16-17 OTR—Incomplete Provisioning 16-62
16-18 OTR—Inter-card Communication Failure 16-64
16-19 OTR—Invalid Provisioning 16-67
16-20 OTR—Invalid Signal (optical receiver) 16-69
16-21 OTR—Local Fault 16-74
16-22 OTR—Loss of Frame 16-76
16-23 OTR—Loss of Lock 16-90
16-24 OTR—Loss of Signal 16-96
16-25 OTR—Low Optical Power Warning 16-112
16-26 OTR—Manual Switch to (West) or (East) path active 16-124
16-27 OTR—Optical Receiver Overload 16-125
16-28 OTR—Optical System Identifier Mismatch 16-134
16-29 OTR—Overhead Link Failure, Loss of Overhead Synchronization 16-135
16-30 OTR—Path Lockout Active 16-141
16-31 OTR—Performance Monitoring Timer Failed 16-142
16-32 OTR—Protection Mate Circuit Pack Not Available 16-145
16-33 OTR—Remote Automatic Laser Shutdown 16-146
16-34 OTR—Remote Defect Indication 16-148
16-35 OTR—Remote Fault 16-153
16-36 OTR—Surrogate Alarm Indication Signal 16-155
16-37 OTR—TCA - Optical Power Rx High 16-156
16-38 OTR—TCA - Optical Power Rx Low 16-166
16-39 OTR—TCA - Optical Power Tx High 16-173
16-40 OTR—TCA - Optical Power Tx Low 16-177
16-41 OTR—Transceiver Degrade 16-181
16-42 OTR—Tx Alarm Indication Signal 16-183
16-43 OTR—Tx High Bit Error Rate 16-185
16-44 OTR—Tx Loss of Frame 16-189
16-45 OTR—Tx Loss of Synchronization 16-193
16-46 OTR—Unassigned Optical System Identifier 16-198
16-47 OTR—Unknown Circuit Pack 16-200

About this document

ATTENTION

This document is presented in four parts: Part 1, Part 2, Part 3, and Part 4. Each part has its own table of contents. The table of contents in Part 1 contains topics found in Part 1 only. The table of contents in Part 2 contains topics found in Part 2 only. The table of contents in Part 3 contains topics found in Part 3 only. The table of contents in Part 4 contains topics found in Part 3 only.

You are reading Part 3 of the *Trouble Clearing and Alarm Reference Guide,* 323-1701-542.

This document provides general information about alarms, as well as procedures for clearing alarms on the Nortel Optical Metro 5100/5200 (identified prior to Release 7 as Nortel Networks OPTera Metro 5000-series Multiservice Platform).

Audience for this document

This document is intended for the following audience:

- provisioners
- installers
- transmission standards engineers
- field maintenance engineers
- system line-up and testing (SLAT) personnel
- maintenance technicians
- network administrators

Optical Metro 5100/5200 library

The Optical Metro 5100/5200 library consists of the *Nortel Optical Metro 5100/5200 Technical Publications*, NT0H65AM.

Technical Publications

The *Optical Metro 5100/5200 Technical Publications* (NTP) consist of descriptive information and procedures.

Descriptive information

These NTPs provide detailed descriptive information about the Optical Metro 5100/5200, including system software and hardware descriptions, technical specifications, ordering information, and TL1 user information.

Procedures

These NTPs contain all procedures required to install, provision, and maintain the Optical Metro 5100/5200.

The following roadmap lists the documents in the Optical Metro 5100/5200 library.

OM2805p

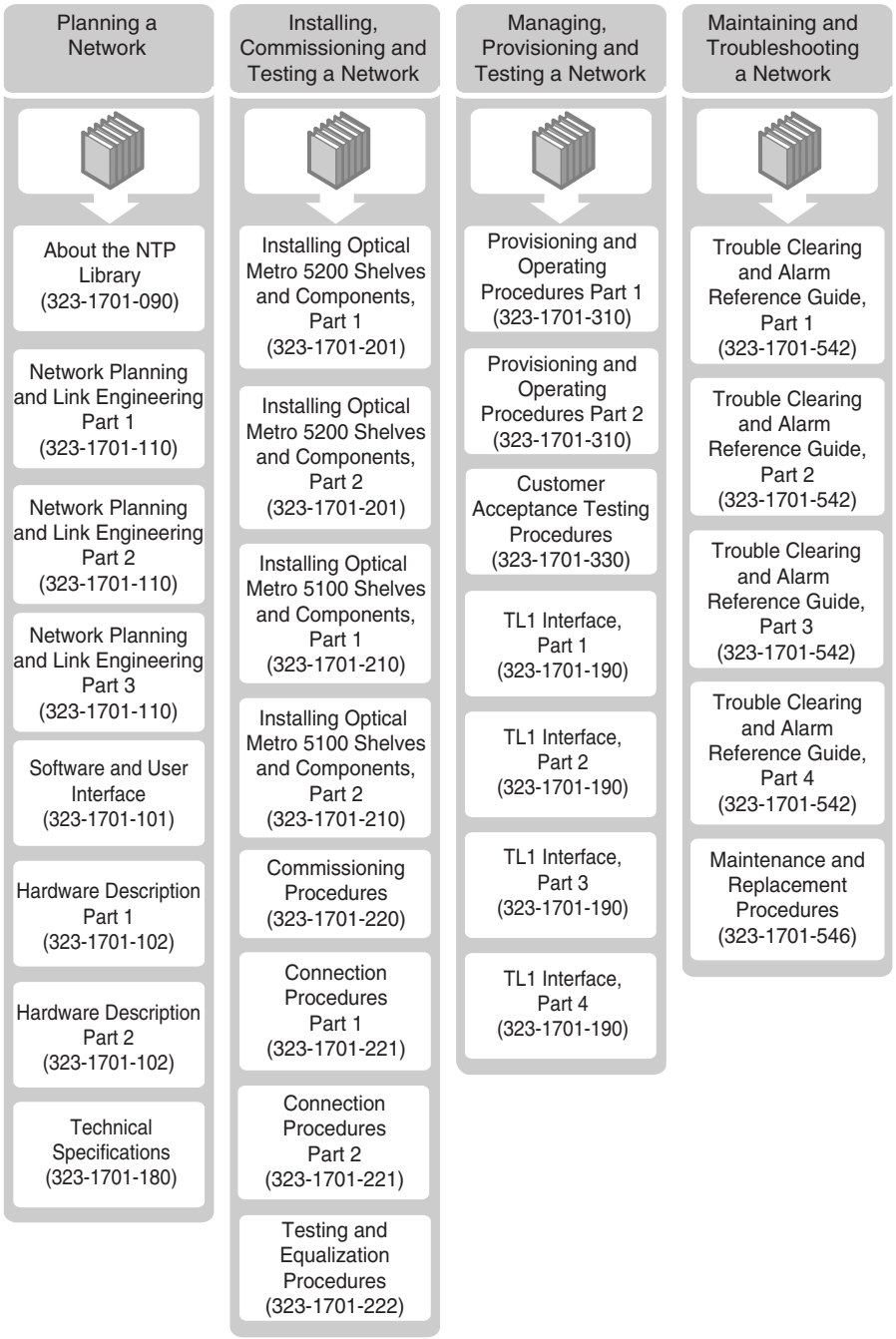

Technical assistance service telephone numbers

For technical support and information from Nortel Networks, refer to the following table.

Technical Assistance Service	
For service-affecting problems: For 24-hour emergency recovery or software upgrade support, that is, for: • restoration of service for equipment that has been carrying traffic and is out of service • issues that prevent traffic protection switching • issues that prevent completion of software upgrades	**North America:** 1-800-4NORTEL (1-800-466-7835) **International:** 001-919-992-8300
For non-service-affecting problems: For 24-hour support on issues requiring immediate support or for 14-hour support (8 a.m. to 10 p.m. EST) on upgrade notification and non-urgent issues.	**North America:** 1-800-4NORTEL (1-800-466-7835) ***Note:*** You require an express routing code (ERC). To determine the ERC, see our corporate Web site at www.nortel.com. Click on the Express Routing Codes link. **International:** Varies according to country. For a list of telephone numbers, see our corporate Web site at www.nortel.com. Click on the Contact Us link.
Global software upgrade support:	**North America:** 1-800-4NORTEL (1-800-466-7835) **International:** Varies according to country. For a list of telephone numbers, see our corporate Web site at www.nortel.com. Click on the Contact Us link.

Clearing shelf and SP alarms

Use the procedures in this chapter to clear shelf and SP alarms. Perform the steps in each procedure in the order that they appear. After you clear the alarm, stop the procedure. If the alarm does not clear, contact your next level of technical support.

For a description of SP circuit packs, see the "SP circuit packs" section in *Hardware Description*, 323-1701-102.

Table 13-1 lists the meaning of SP indicator lamps.

Table 13-1
SP circuit pack indicator lamps

Indicator lamp	Color	State	Meaning
STATUS	green	on	The SP is functioning normally.
	red	on	A fault condition exists on the SP.

Before you begin

Read "Troubleshooting the Optical Metro 5100/5200" chapter in Part 1 of *Trouble Clearing and Alarm Reference Guide*, for detailed information on how to respond to alarm indicators (audible alarms and lamps). The "Alarm description" chapter in Part 1 of *Trouble Clearing and Alarm Reference Guide*, explains events, warnings, and error messages.

Requirements

CAUTION
Risk of equipment damage
Observe all antistatic precautions when handling the circuit packs.

Exposed circuit packs can be damaged by electrostatic discharge. When handling circuit packs always wear a wrist strap that is grounded to the shelf maintenance panel, and shoe straps if necessary. For more information, refer to the "Handling circuit packs" section of "Isolating faults that do not generate alarms" in Part 1 of *Trouble Clearing and Alarm Reference Guide*.

CAUTION
Risk of laser radiation
The Optical Metro 5100/5200 operates up to a Hazard Level of k x 3A (IEC 60825-2:2000) or 1M (IEC 60825-2:2004). Use only viewing instruments with proper optical attenuation.

Procedure list

Table 13-2 lists the procedures in this chapter and indicates whether or not the alarm is masked if the equipment or facility that raises the alarm is out-of-service.

Table 13-2
Procedures for clearing shelf and SP alarms

Procedure	Page	Alarm is masked if equipment or facility is OOS
13-1 Shelf—All Database Copies are Unavailable	13-4	Not applicable
13-2 Shelf—Automatic Laser Shutdown	13-7	Not applicable
13-3 Shelf—Breaker A Tripped, Breaker B Tripped	13-9	Not applicable
13-4 Shelf—Cooling Unit Failed/Missing	13-12	Not applicable
13-5 Shelf—Data Recovery Failure	13-14	Not applicable
13-6 Shelf—Database Redundancy is Unavailable	13-15	Not applicable
13-7 Shelf—DNS suffix mismatch	13-17	Not applicable
13-8 Shelf—Ethernet Port 10BaseT 1X Failure	13-18	Not applicable
13-9 Shelf—Ethernet Port 10BaseT 2X Failure	13-20	Not applicable

Table 13-2 (continued)
Procedures for clearing shelf and SP alarms

Procedure	Page	Alarm is masked if equipment or facility is OOS
13-10 Shelf—Parallel Telemetry Scan Point	13-22	Not applicable
13-11 Shelf—Power Feed A Low/Missing, Power Feed B Low/Missing	13-27	Not applicable
13-12 Shelf—SBUS Failure	13-29	Not applicable
13-13 Shelf—Software Library Missing	13-30	Not applicable
13-14 Shelf—Software Library Transfer Incomplete	13-32	Not applicable
13-15 Shelf—Software Upgrade in Progress	13-33	Not applicable
13-16 Shelf—Temperature Out of Range	13-34	Not applicable
13-17 Shelf—Temperature Out of Range Warning	13-36	Not applicable
13-18 Shelf—VAC Failed/Missing	13-38	Not applicable
13-19 SP—Database Backup Failure	13-39	Not applicable
13-20 SP—Database Restore Failure	13-40	Not applicable
13-21 SP—Intrasite Communication Failure	13-41	Not applicable
13-22 SP—Software Below Baseline	13-43	Not applicable

Procedure 13-1
Shelf—All Database Copies are Unavailable

Probable cause

This alarm becomes active when the non-SP circuit packs that contain the primary and standby database information for the shelf are unavailable. The circuit packs can be out of service because they are failed, missing, or have been manually placed out of service.

In an Optical Metro 5200 shelf, the alarm is raised on OCM circuit packs.

> ***Note:*** If there is no ENET2 communications available to the shelf, this alarm will cause the System Manager (SMI) to lose contact to the shelf (as the OCM terminates the intercard Supervisory Bus (SBUS) communications via the backplane).

In an Optical Metro 5100 shelf, the alarm can be raised on the OCI, OCI SRM, OCI SRM GbE/FC, OCLD, OTR, Muxponder, or OSC circuit packs.

Impact

Major, non-service-affecting.

Precautions

ATTENTION

When you clear this alarm on Optical Metro 5100 shelves, at all times the SP, and at least one non-SP circuit pack that is carrying the database, must be seated in the shelf.

CAUTION

Risk of recovery procedures affecting traffic

This alarm is not service-affecting, however the recovery action can be service-affecting. Do not turn on or off the power supply to the shelf, or remove the SP circuit pack.

—continued—

Procedure 13-1 (continued)
Shelf—All Database Copies are Unavailable

Action

Step	Action
1	Refer to the System Manager Equipment Inventory screen, or run a health check to determine which circuit pack contains the database. To run a health check, refer to Procedure 1-39 "Performing a health check" in *Provisioning and Operating Procedures,* 323-1701-310. ***Note:*** In the System Manager Equipment Inventory screen, the circuit pack(s) in bold are the database card(s).

2

If	**Then** go to
one circuit pack is manually out of service	the next step
at least one circuit pack is missing	step 5
both circuit packs are manually in service	step 6

3 Put the out of service circuit pack back in service. Follow Procedure 3-10 "Putting a circuit pack or SFP facility in-service" in *Provisioning and Operating Procedures*, 323-1701-310. Go to the next step.

4

If	**Then**
the alarm clears	you have completed the procedure
the alarm remains	go to step 6

5 Install and seat the circuit packs in the shelf. Follow Procedure 7-1 "Inserting circuit packs" in *Installing Optical Metro 5200 Shelves and Components* 323-1701-201 or Procedure 7-1 "Inserting circuit packs in an Optical Metro 5100 shelf" in *Installing Optical Metro 5100 Shelves and Components* 323-1701-210.

If	**Then**
the alarm clears	you have completed this procedure
the alarm remains	go to step 6

—continued—

Procedure 13-1 (continued)
Shelf—All Database Copies are Unavailable

Step	Action	
6	**If**	**Then**
	both circuit packs have other active alarms raised against them	go to the next step
	both circuit packs do not have other active alarms raised against them	contact your next level of support
7	Refer to and follow the corresponding alarm clearing procedure for the applicable circuit packs in the *Trouble Clearing and Alarm Reference Guide,* 323-1701-542.	
	If	**Then**
	the alarm clears	you have completed this procedure
	the alarm remains	contact your next level of support

—end—

Procedure 13-2
Shelf—Automatic Laser Shutdown

ATTENTION

If a fiber break occurs and is being repaired when automatic laser shutdown (ALS) or automatic laser recovery (ALR) is active on a fiber, there are impacts on the behavior of the alarms in the system. If you use light to test the broken fiber (with a light source or an optical time domain reflectometer (OTDR)), you clear the ALS alarms. This is because the shelf detects light and clears the Loss of Signal (LOS) condition. As a result, the shelf and the remote shelf power up the laser (depending on whether both Tx and Rx fibers are cut or only one of them is cut). If a Remote Automatic Laser Shutdown alarm is raised on the shelf when the light is removed, the alarm is replaced by an LOS alarm.

If all the channels impacted by the fiber break detect light when the laser is powered up, the Automatic Laser Shutdown alarm is cleared. This is an expected behavior because a shelf cannot distinguish between a light source from an optical test set or a light source from a remote shelf.

Probable cause

This shelf-level alarm becomes active when a laser is shut down after a fiber break. It is raised on all the shelves where the ALS feature shuts down a laser. It indicates the shelves where laser recovery is needed. Clearing the alarm requires first physically repairing the broken fiber and then restoring traffic through the System Manager. To restore traffic, you can either issue a manual laser activation command or enable automatic laser recovery. Follow this procedure to clear the alarm.

This alarm works in conjunction with the OCLD, OTR, or MOTR ALS alarm. It becomes active when ALS is initiated on an OCLD, OTR, or MOTR. The alarm can be cleared by clearing the OCLD/OTR/MOTR-Remote Automatic Laser Shutdown alarm(s).

Impact

Major, service-affecting.

—continued—

Procedure 13-2 (continued)
Shelf—Automatic Laser Shutdown

Requirements

You must be logged into the System Manager as an Admin or Operator level user.

The manual laser activation command only needs to be issued at one end of a span that is in ALS mode.

Automatic laser recovery can be enabled only after automatic laser shutdown is enabled.

When a network is in ALS mode, you cannot rely on the light in the fiber to locate a fiber cut. Nortel Networks recommends that you use an optical time domain reflectometer (OTDR) to project light in the fiber when a Loss of Signal alarm is detected. The OTDR device provides information about the location of the fiber cut. You can also use a light source device to generate an optical signal into the fiber. In this case, you troubleshoot the fiber cut in the same way as when the ALS feature is disabled.

Action

Step	Action
1	If this alarm was raised during a maintenance activity, and you would like to disable the feature, follow Procedure 1-43 “Enabling or disabling automatic laser shutdown” in *Provisioning and Operating Procedures*, 323-1701-310 to disable ALS.
2	Determine where the OCLD or OTR Remote Automatic Laser Shutdown is located. This alarm indicates that the far-end shelf has shutdown its lasers. Clear this alarm(s) first. Follow Procedure 8-31 “OCLD—Remote Automatic Laser Shutdown”, Procedure 16-33 “OTR—Remote Automatic Laser Shutdown”, or Procedure 17-34 “MOTR—Remote Automatic Laser Shutdown” in *Trouble Clearing and Alarm Reference Guide,* 323-1701-542. ***Note:*** Refer to a network topology diagram to determine how the affected OCLDs are connected at the near-end and far-end sites.
3	At the shelf with the Shelf—Automatic Laser Shutdown enabled check for Rx facility alarms raised against one or more OCLDs or OTRs. Follow the corresponding alarm clearing procedures for the facility alarms. Refer to this book, *Trouble Clearing and Alarm Reference Guide*, 323-1701-542. **If** — **Then** the alarm clears — you have completed the procedure the alarm remains — contact your next level of support **—end—**

Procedure 13-3
Shelf—Breaker A Tripped, Breaker B Tripped

Probable cause

This alarm becomes active when the A or B power breaker has failed because the input power is crossing its upper threshold level.

Impact

Major, non-service-affecting.

Precautions

It is possible for this alarm to remain raised incorrectly. If the circuit breaker is not actually tripped, close and re-open the circuit breaker to clear the alarm.

CAUTION
Risk of recovery procedures affecting traffic
While this alarm is non-service-affecting, the recovery action can be service-affecting.

Action

Step	Action
1	Check to see if the A (or B) circuit breaker is tripped.

If	Then go to
the circuit breaker is tripped	the next step
the circuit breaker is not tripped	step 4

Step	Action
2	Reset the circuit breaker.

CAUTION
Risk of powering-down the shelf
Make sure that you are tripping the correct breaker. If you power-down the wrong breaker, you power-down the shelf and drop traffic on the ring.

—continued—

Procedure 13-3 (continued)
Shelf—Breaker A Tripped, Breaker B Tripped

Step	Action	
3	**If**	**Then**
	the alarm clears	you have completed this procedure
	the alarm remains	go to the next step
4	Make sure the shelf is correctly grounded. Use a multimeter (voltmeter) to verify that the ground or “return” power feed has a zero voltage difference with the shelf bay and chassis.	
	If	**Then** go to
	the shelf is not correctly grounded	the next step
	the shelf is correctly grounded	step 6
5	Ground the shelf. Follow the procedure appropriate to the type of shelf in *Installing Optical Metro 5200 Shelves and Components,* 323-1701-201, or *Installing Optical Metro 5100 Shelves and Components*, 323-1701-210.	
	If	**Then**
	when you complete the procedure the alarm clears	you have completed this procedure
	the shelf is correctly grounded and the alarm remains	go to the next step
6	**If**	**Then**
	the shelf is powered by a rectifier	go to the next step
	the shelf is not powered by a rectifier	contact your next level of support

—continued—

Procedure 13-3 (continued)
Shelf—Breaker A Tripped, Breaker B Tripped

Step	Action	
7	Make sure that the power supply is installed correctly and is operational.	
	If	**Then**
	the power supply is not operational or is not installed correctly	correct the problem. Follow the procedure appropriate to the type of shelf in *Installing Optical Metro 5200 Shelves and Components,* 323-1701-201, or *Installing Optical Metro 5100 Shelves and Components*, 323-1701-210. Go to the next step.
	the power supply is operational and installed correctly	contact your next level of support
8	**If**	**Then**
	the alarm clears	you have completed this procedure
	the alarm remains	contact your next level of support

—end—

Procedure 13-4
Shelf—Cooling Unit Failed/Missing

Probable cause

This alarm becomes active when the cooling unit is missing or has failed.

Impact

Table 13-3 lists the impact that this alarm has under different conditions.

Table 13-3
Cooling Unit Failed/Missing alarm impact

Condition	Severity	Impact
The temperature is above 35°C and the alarm is on	Critical	service-affecting
The temperature is below 35°C	Major	non-service-affecting

Precautions

CAUTION
Risk of affecting traffic
While this alarm may not be service-affecting, overheating may cause multiple component failures which may be service-affecting.

Nortel Networks recommends that you replace the cooling unit within 72 hours of the Cooling Unit Fail/Missing alarm being raised. The time interval allowed for the cooling unit to be out of the shelf during the replacement procedure is 10 minutes at 25°C. It is also important that the air filter and the cooling unit be completely removed to ensure reliable thermal convection cooling and maintain error-free operation during this replacement interval. To replace the cooling unit, follow Procedure 2-3 “Replacing the cooling unit in an Optical Metro 5200 shelf” or Procedure 2-4 “Replacing the cooling unit in an Optical Metro 5100 shelf” in *Maintenance and Replacement Procedures,* 323-1701-546.

—continued—

Procedure 13-4 (continued)
Shelf—Cooling Unit Failed/Missing

Action

Step	Action
1	Make sure that the cooling unit is operating.

If	**Then** go to
the cooling unit is operating	the next step
the cooling unit is not operating	step 4

Step	Action
2	Inspect the grill in front of the shelf. If it appears dirty, vacuum the grill on the fan modules.

If	**Then**
the alarm clears	you have completed this procedure
the alarm remains	go to the next step

Step	Action
3	Replace the air filters in the cooling unit. Follow the procedure appropriate to the type of shelf in *Maintenance and Replacement Procedures,* 323-1701-546.

If	**Then**
the alarm clears	you have completed this procedure
the alarm remains	go to the next step

Step	Action
4	Replace the cooling unit. Refer to Procedure 2-3 “Replacing the cooling unit in an Optical Metro 5200 shelf” or Procedure 2-4 “Replacing the cooling unit in an Optical Metro 5100 shelf” in *Maintenance and Replacement Procedures,* 323-1701-546.

If	**Then**
the alarm clears	you have completed this procedure
the alarm remains	contact your next level of support

—end—

Procedure 13-5
Shelf—Data Recovery Failure

Probable cause

This alarm becomes active when the SP circuit pack does not recover configuration data from an OCM circuit pack (the SP is in a decommissioned state).

> ***Note:*** This alarm will only be visible in System Manager when you are directly connected to the shelf (due to the SP having no data while in a decommissioned state).

Impact

Major, non-service-affecting.

Action

Step	Action
1	Reseat the SP. Follow Procedure 3-68 “Reseating a circuit pack” in *Provisioning and Operating Procedures,* 323-1701-310.
2	Replace the SP. Follow Procedure 3-13 “Replacing an SP circuit pack” in *Maintenance and Replacement Procedures*, 323-1701-546.

If	Then
the alarm clears	the removed circuit pack has faults. You have completed this procedure.
the alarm remains	the circuit pack is not the problem. Reseat the original circuit pack. Contact your next level of support.

—end—

Procedure 13-6
Shelf—Database Redundancy is Unavailable

Probable cause

This alarm becomes active when a non-SP circuit pack that stores commissioning information for the shelf fails or is missing.

In an Optical Metro 5200 shelf, the alarm is raised on OCM circuit packs.

In an Optical Metro 5100 shelf, the alarm can be raised on OCI, SRM OCI, OCLD, OTR, MOTR, or OSC circuit packs.

> ***Note:*** On the Optical Metro 5100 shelf, this alarm may be cleared by deprovisioning the shelf to where there can be only one circuit pack capable of carrying the database. In other words, the shelf will be deprovisioned to contain only the Shelf Processor (SP) and one other circuit pack (either the OCI, OCI SRM, OCLD, OTR, MOTR, or OSC).

Impact

Minor, non-service-affecting.

Precautions

CAUTION
Risk of recovery procedures affecting traffic
This alarm is not service-affecting, however the recovery action can be service-affecting.

Action

Step	Action
1	Refer to the System Manager Equipment Inventory screen, or run a health check to determine which circuit pack contains the database. To run a health check, refer to Procedure 1-39 “Performing a health check” in *Provisioning and Operating Procedures,* 323-1701-310. ***Note:*** In the System Manager Equipment Inventory screen, the circuit pack(s) in bold are the database circuit pack(s).

—continued—

Procedure 13-6 (continued)
Shelf—Database Redundancy is Unavailable

Step	Action	
2	**If**	**Then** go to
	your intended shelf configuration is an Optical Metro 5100 with only the SP and one other circuit pack	step 3
	any other shelf configuration	step 4
3	This alarm can be cleared by deprovisioning all circuit packs other than the SP and one other (either the OCI, OCI SRM, OCLD, OTR, MOTR of OSC). See the chapter "Provisioning circuit packs and managing traffic" in *Provisioning and Operating Procedures*, 323-1701-310.	
4	**If**	**Then**
	the circuit pack containing the database is missing	install and seat the circuit pack in the shelf. Follow the procedure appropriate to the type of shelf in *Installing Optical Metro 5200 Shelves and Components,* 323-1701-201, or *Installing Optical Metro 5100 Shelves and Components*, 323-1701-210. Go to the next step.
	the circuit pack has failed	step 6
5	**If**	**Then**
	the alarm clears	you have completed this procedure
	the alarm remains	go to the next step
6	Refer to and follow the corresponding alarm clearing procedure for the applicable circuit packs in the *Trouble Clearing and Alarm Reference Guide* 323-1701-542.	
	If	**Then**
	the alarm clears	you have completed this procedure
	the alarm remains	contact your next level of support

—end—

Procedure 13-7
Shelf—DNS Suffix Mismatch

Probable cause

This warning becomes active on a shelf when the DNS proxy service is enabled, but the configured DNS suffix does not match the suffix being used by the DHCP server. This normally occurs when the suffix is modified, then the DNS proxy service is enabled, but the shelf has not been restarted.

Impact

Warning, non-service-affecting.

Action

Step	Action
1	Restart the shelf. Follow Procedure 4-3 "Restarting a shelf" in *Provisioning and Operating Procedures*, 323-1701-310.

If	Then
the alarm clears	you have completed this procedure
the alarm remains	contact your next level of support

—end—

Procedure 13-8
Shelf—Ethernet Port 10BaseT 1X Failure

Probable cause

This alarm becomes active when there is a loss of connectivity on Ethernet port 1.

Note 1: This procedure assumes that port 1 is used for DCN or laptop connections.

Note 2: If you reboot a laptop while connected to port 1, you will have to provide a new IP address to re-connect to the shelf.

Impact

Major, non-service-affecting.

Action

Step	Action	
1	**If** both the port and the alarm are enabled and	**Then**
	there is no connection	go to the next step
	there is a connection	go to step 4
	otherwise	contact your next level of support
2	Do one of the following: **a.** disable the port alarm using System Manager. See Procedure 1-25, "Provisioning Ethernet port alarms" in *Provisioning and Operating Procedures*, 323-1701-310. **b.** make a connection to the port. See the appropriate procedure in *Connection Procedures*, 323-1701-221.	
3	**If**	**Then**
	the alarm clears	you have completed the procedure
	the alarm remains	go to the next step
4	Unplug and plug the connecting cable.	
5	**If**	**Then**
	the alarm clears	you have completed the procedure
	the alarm remains	go to the next step

—continued—

Procedure 13-8 (continued)
Shelf—Ethernet Port 10BaseT 1X Failure

Step	Action	
6	Replace the cable. **a.** check whether the DCN is still operating **b.** check the link light on the port **c.** check for crossover versus straight-through cable	
7	**If**	**Then**
	the alarm clears	you have completed the procedure
	the alarm remains	contact your next level of support

—end—

Procedure 13-9
Shelf—Ethernet Port 10BaseT 2X Failure

Probable cause

This alarm becomes active when there is a loss of connectivity on Ethernet port 2.

Note 1: This procedure assumes that port 2 is used for a hub connection.

Note 2: If port 2 of Shelf A and B are connected and the SP on Shelf A is pulled, an alarm is raised on Shelf B after 40 seconds. The alarm clears once the SP is replaced and regains normal function.
If Shelf A is powered down, an alarm is raised on Shelf B after an interval of 40 seconds. The alarm clears 50 seconds after powering up Shelf A.

Impact

Major, non-service-affecting.

Action

Step	Action
1	**If** both the port and the alarm are enabled and **Then** there is no connection — go to the next step there is a connection — go to step 4 otherwise — contact your next level of support
2	Do one of the following: **a.** disable the port alarm using System Manager. See Procedure 1-25, "Provisioning Ethernet port alarms" in *Provisioning and Operating Procedures*, 323-1701-310. **b.** make a proper connection to the port. See the appropriate procedure in *Connection Procedures*, 323-1701-221.
3	**If** — **Then** the alarm clears — you have completed the procedure the alarm remains — go to the next step
4	Unplug and plug the connecting cable.

—continued—

Procedure 13-9 (continued)
Shelf—Ethernet Port 10BaseT 2X Failure

Step	Action	
5	**If**	**Then**
	the alarm clears	you have completed the procedure
	the alarm remains	go to the next step
6	Replace the cable. **a.** check whether there is a problem with the hub **b.** check the link light on the port **c.** check for crossover versus straight-through cable	
7	**If**	**Then**
	the alarm clears	you have completed the procedure
	the alarm remains	contact your next level of support

—end—

Procedure 13-10
Shelf—Parallel Telemetry Scan Point

Probable cause

This alarm becomes active when a condition that meets the user-provisionable requirements for an alarm activates one of the input ports. An external event makes this alarm active, such as door open, power failure, or fire.

Optical Metro 5200
This alarm can be raised on four ports (1 to 4) on an Optical Metro 5200 shelf.

Optical Metro 5100
This alarm can be raised on eight ports (1 to 8) on an Optical Metro 5100 shelf.

Impact

Minor, non-service-affecting.

Action

Step	Action
1	Check the site records to determine how the alarm is provisioned.
2	Clear the condition using the appropriate procedure. Blank templates (Table 13-4 to Table 13-7) are included on the following four pages.

—end—

Table 13-4
Shelf —Parallel Telemetry Scan Point sub-procedure 1

Alarm	**Shelf**	**Port**
Description		
Action		

Table 13-5
Shelf —Parallel Telemetry Scan Point sub-procedure 2

Alarm	**Shelf**	**Port**
Description		
Action		

Table 13-6
Shelf —Parallel Telemetry Scan Point sub-procedure 3

Alarm	**Shelf**	**Port**
Description		
Action		

Table 13-7
Shelf —Parallel Telemetry Scan Point sub-procedure 4

Alarm	**Shelf**	**Port**
Description		
Action		

Procedure 13-11
Shelf—Power Feed A Low/Missing, Power Feed B Low/Missing

Probable cause

This alarm becomes active when the –48 V dc power supply for the shelf is below the acceptable threshold level, or the power supply is missing.

Impact

Major, non-service-affecting.

Action

Step	Action
1	Check to see if breaker A (or B) is tripped.

If	Then go to
the circuit breaker is tripped	the next step
the circuit breaker is not tripped	step 4

2 Reset the circuit breaker.

> **CAUTION**
> **Risk of powering-down the shelf**
> Make sure that you are tripping the correct breaker. If you power-down the wrong breaker, you will power-down the shelf and drop traffic on the ring.

3

If	Then
the alarm clears	you have completed this procedure
the alarm remains	go to the next step

4 Make sure the shelf is correctly grounded.

If	Then go to
the shelf is not correctly grounded	the next step
the shelf is correctly grounded	step 6

—continued—

Procedure 13-11 (continued)
Shelf—Power Feed A Low/Missing, Power Feed B Low/Missing

Step	Action	
5	Ground the shelf. Follow the procedure appropriate to the type of shelf in *Installing Optical Metro 5200 Shelves and Components,* 323-1701-201, or *Installing Optical Metro 5100 Shelves and Components*, 323-1701-210.	
	If	**Then**
	when you complete the procedure, if the alarm clears	you have completed this procedure
	the shelf is correctly grounded and the alarm remains	go to the next step
6	**If**	**Then**
	the shelf is powered by a rectifier	go to the next step
	the shelf is not powered by a rectifier	contact your next level of support
7	Make sure that the power supply is installed correctly and is operational.	
	If	**Then**
	the power supply is not operational or is not installed correctly	correct the problem. Follow the procedure appropriate to the type of shelf in *Installing Optical Metro 5200 Shelves and Components,* 323-1701-201, or *Installing Optical Metro 5100 Shelves and Components*, 323-1701-210. Go to the next step.
	the power supply is operational and installed correctly	contact your next level of support
8	**If**	**Then**
	the alarm clears	you have completed this procedure
	the alarm remains	contact your next level of support

—end—

Procedure 13-12
Shelf—SBUS Failure

Probable cause

This alarm becomes active when one of the two redundant supervisory buses has failed.

Impact

Major, non-service-affecting.

Precautions

CAUTION
Risk of recovery procedures affecting traffic
This alarm is not service-affecting, however the recovery action can be service-affecting.

Action

Step	Action
1	Reseat the SP. Follow Procedure 3-68 “Reseating a circuit pack” in *Provisioning and Operating Procedures,* 323-1701-310.

If	Then
the alarm clears	you have completed this procedure
the alarm remains	go to the next step

Step	Action
2	Replace the SP. Follow Procedure 3-13 “Replacing an SP circuit pack” in *Maintenance and Replacement Procedures*, 323-1701-546.

If	Then
the alarm clears	the removed circuit pack has faults. You have completed this procedure.
the alarm remains	the circuit pack is not the problem. Reseat the original circuit pack. Contact your next level of support.

—end—

Procedure 13-13
Shelf—Software Library Missing

Probable cause

This alarm becomes active when the software load on the SP circuit pack is different from the version on the shelf.

Impact

Minor, non-service-affecting.

While the alarm is raised, the System Manager may not correctly display information about the shelf, or the circuit packs that are seated in the shelf.

Requirements

A CD-ROM with Optical Metro 5100/5200 release load or the software load available on your PC (unless the NOC will be performing the upgrade remotely).

Precautions

CAUTION
Risk of recovery procedures affecting traffic
While this alarm is non-service-affecting, the recovery action can be service-affecting.

Action

Step	Action
1	Click the Admin tab and click the Software Upgrade tab.
2	Select a shelf from the list. Right-click on the highlighted line. From the pop-up menu that appears, select Missing Library. *A dialog box appears. Select the file of the software load that you are inserting. A catalog file (*.catalog) stores the software loads. Wait until the transfer is complete. The transfer can take between a few seconds and seven minutes, depending on your network.*
3	Select the shelf from the list. Right-click on the highlighted line. From the menu that appears, select Cancel. *A system message appears asking if you want to remove the version xx load from the shelf.*

—continued—

Procedure 13-13 (continued)
Shelf—Software Library Missing

Step	Action
4	Click Yes and wait until the LED on the circuit pack changes to green which means that the SP has finished loading the software. *Once you click Yes, the SP will reboot.* ***Note:*** When you click Yes, the System Manager does not remove the software load from the circuit pack. This sequence of steps reduces the time to load the new software on the SP circuit pack. *You have changed the software load on the SP circuit pack.*
5	If the System Manager does not close automatically, close the System Manager and your browser window, then re-login to the shelf. After you re-login to the shelf, the System Manager should be running the newly-upgraded software release.
6	Use the System Manager to set the time on the SP circuit pack for the shelf to synchronize it with the other shelves in the network. See Procedure 1-24 "Changing the date and time on a shelf" in *Provisioning and Operating Procedures,* 323-1701-310. ***Note 1:*** If you do not set the time on the SP circuit pack, the SP has an invalid time. Any alarms raised by the system displays an incorrect time stamp. ***Note 2:*** If intrasite fault sectionalization was enabled in the Optical Metro 5200 ring prior to performing this procedure, enable the feature again. Follow Procedure 3-38 "Enabling intrasite fault sectionalization (IFS)" in *Provisioning and Operating Procedures*, 323-1701-310.
7	**If** — **Then** the alarm clears — you have completed this procedure the alarm remains — contact your next level of support

—end—

Procedure 13-14
Shelf—Software Library Transfer Incomplete

Probable cause

This alarm becomes active when the transfer of the software library fails during an upgrade.

Impact

Warning, non-service-affecting.

Action

Step	Action	
1	In the System Manager, select the Admin tab.	
2	Select the Software Upgrade tab.	
3	Right-click the highlighted shelf to determine the next upgrade stage.	
4	Select **Transfer** to reattempt the software transfer or **Cancel** to cancel the upgrade process.	
5	**If**	**Then**
	the alarm clears	you have completed this procedure
	the alarm remains	contact your next level of support

—end—

Procedure 13-15
Shelf—Software Upgrade in Progress

Probable cause

This alarm becomes active when there is an uncommitted software load on the system.

Impact

Warning, non-service-affecting.

Action

Step	Action	
1	In the System Manager, select the Admin tab.	
2	Select the Software Upgrade tab.	
3	Right-click the highlighted shelf to determine the next upgrade stage.	
4	Based on the information in *Commissioning Procedures*, 323-1701-220, choose the appropriate step(s) to complete or cancel the upgrade process.	
5	**If**	**Then**
	the alarm clears	you have completed this procedure
	the alarm remains	contact your next level of support

—end—

Procedure 13-16
Shelf—Temperature Out of Range

Probable cause

This alarm becomes active when the nominal temperature on the shelf is too low or too high. One of the following conditions exists:

- the shelf cooling unit has faults
- the central office temperature is too high
- there is a problem with the circuit packs in the shelf

Impact

Critical, service-affecting.

Action

Step	Action
1	Make sure the central office temperature does not exceed the operating temperature requirements of the equipment. Refer to Table 1-1 in *Technical Specifications,* 323-1701-180 for the operating temperature requirements of the Optical Metro 5100/5200 equipment.

If the office temperature	**Then**
is within the operating temperature	go to the next step
is not within the operating temperature	correct the office temperature

Step	Action
2	Inspect the grill in front of the shelf. If it appears dirty, vacuum the grill on the fan modules.

If	**Then**
the alarm clears	you have completed this procedure
the alarm remains	go to the next step

—continued—

Procedure 13-16 (continued)
Shelf—Temperature Out of Range

Step	Action
3	Replace the air filters in the cooling unit. Follow the procedure appropriate to the type of shelf in *Maintenance and Replacement Procedures,* 323-1701-546.

If	Then
the alarm clears	you have completed this procedure
the alarm remains	go to the next step

4

If	Then
the cooling unit is operating	go to step 6
the cooling unit is not operating	follow Procedure 13-4 “Shelf—Cooling Unit Failed/Missing” in this chapter. Go to the next step.

5

If	Then
the alarm clears	you have completed this procedure
the alarm remains	go to the next step

6 Reseat the SP. Follow Procedure 3-68 “Reseating a circuit pack” in *Provisioning and Operating Procedures,* 323-1701-310

If	Then
the alarm clears	you have completed this procedure
the alarm remains	go to the next step

7 Replace the SP circuit pack. Follow Procedure 3-13 “Replacing an SP circuit pack” in *Maintenance and Replacement Procedures,* 323-1701-546.

If	Then
the alarm clears	the removed circuit pack has faults. You have completed this procedure.
the alarm remains	the circuit pack is not the problem. Reseat the original circuit pack. Contact your next level of support.

—end—

Procedure 13-17
Shelf—Temperature Out of Range Warning

Probable cause

This alarm becomes active when the nominal temperature of the SP circuit pack is above 56ºC. One of the following conditions exists:

- a fan module is defective
- the central office temperature is too high
- there is a problem with the SP circuit pack

Impact

Major, non-service-affecting.

Action

Step	Action
1	Make sure the central office temperature does not exceed the operating temperature requirements of the equipment. Refer to Table 1-1 in *Technical Specifications,* 323-1701-180 for the operating temperature requirements of the Optical Metro 5100/5200 equipment.

If the office temperature	**Then**
is within the operating temperature	go to the next step
is not within the operating temperature	correct the office temperature

Step	Action
2	Inspect the grill in front of the shelf. If the grill is dirty, vacuum on the fan modules.

If	**Then**
the alarm clears	you have completed this procedure
the alarm remains	go to the next step

—continued—

Procedure 13-17 (continued)
Shelf—Temperature Out of Range Warning

Step	Action
3	Replace the air filters in the cooling unit. Follow the procedure appropriate to the type of shelf in *Maintenance and Replacement Procedures,* 323-1701-546.

If	Then
the alarm clears	you have completed this procedure
the alarm remains	go to the next step

4

If	Then
the cooling unit is operating	go to step 6
the cooling unit is not operating	follow Procedure 13-4 “Shelf—Cooling Unit Failed/Missing” in this chapter. Go to the next step.

5

If	Then
the alarm clears	you have completed this procedure
the alarm remains	go to the next step

6 Reseat the SP. Follow Procedure 3-68 “Reseating a circuit pack” in *Provisioning and Operating Procedures,* 323-1701-310.

If	Then
the alarm clears	you have completed this procedure
the alarm remains	go to the next step

7 Replace the SP circuit pack. See Procedure 3-13 “Replacing an SP circuit pack” in 323-1701-546, *Maintenance and Replacement Procedures.*

If	Then
the alarm clears	you have completed this procedure
the alarm remains	contact your next level of support

—end—

Procedure 13-18
Shelf—VAC Failed/Missing

Probable cause

This alarm becomes active on the Optical Metro 5200 shelf when there is an equipment fault with the visual alarm card (VAC) or other equipment on the proprietary communication bus.

This alarm becomes active on the Optical Metro 5100 shelf when there is an equipment fault with equipment on the proprietary communication bus, but not with the VAC.

Impact

Minor, non-service-affecting.

Action

Step	Action
1	Contact Nortel Networks. You can find the Technical assistance service telephone numbers in "About this document".

—end—

Procedure 13-19
SP—Database Backup Failure

Probable cause

This alarm becomes active when the Database Backup operation cannot execute. If this alarm is raised, one of the following conditions exists:

- the Flash file system on the SP circuit pack is full
- there is an internal file, directory creation, or writing error

The alarm clears when another Database Backup operation is executed.

Impact

Minor, non-service-affecting.

Action

Step	Action	
1	Follow Procedure 1-36 “Backing up shelf configuration data” in *Provisioning and Operating Procedures*, 323-1701-310, to retry the backup operation.	
2	**If**	**Then**
	the alarm clears	you have completed this procedure
	the alarm remains	contact your next level of support

—end—

Procedure 13-20
SP—Database Restore Failure

Probable cause

This alarm becomes active when the Database Restore operation cannot execute. If this alarm is raised, one of the following conditions exists:

- the backup file cannot be opened or cannot be read
- the software version currently operating on the shelf does not match the software version that created the backup file
- the calculated checksum of the backup file does not match the checksum recorded in the header of the backup file
- the new restored configuration data cannot be saved in the database

The alarm clears when another Database Restore operation is executed or if you cancel the Database Restore operation.

Impact

Minor, non-service-affecting.

Action

Step	Action	
1	Follow Procedure 1-37 “Restoring shelf configuration data” in *Provisioning and Operating Procedures*, 323-1701-310, to retry the operation.	
2	**If**	**Then**
	the alarm clears	you have completed this procedure
	the alarm remains	contact your next level of support

—end—

Procedure 13-21
SP—Intrasite Communication Failure

Probable cause

This alarm becomes active when a shelf determines that there is a problem with the 10Base–T 2X connections to the other shelves at this site. Some features, such as the intrasite fault sectionalization (IFS) feature, use this Ethernet port to manage shelves at the site.

If this alarm is raised, one of the following conditions exist:

- the Ethernet cable connecting the shelf to the Ethernet hub, or the cross-over cable connecting the two shelves at the site is defective
- the Ethernet hub is defective
- the OSC circuit pack of this system/+site is missing or failed and IFS is enabled
- the shelf containing the OSC has been backed out but not yet restarted

Note: If this alarm is raised during the decommissioning of a shelf, disable IFS before decommissioning the shelf and re-enable IFS when decommissioning is complete.

Impact

Major, non-service-affecting.

Action

Step	Action
1	Make sure that all the shelves are correctly connected by way of their 10Base–T 2X communication ports. On each shelf, verify that the 10Base–T 2X port LINK indicator lamp is on and the DATA indicator lamp flashes periodically.
2	If an Ethernet hub is used, make sure that the LINK indicator lamp is on for all connected ports.
3	Make sure that the Ethernet port 2 is enabled at each shelf. To enable Ethernet port 2, follow Procedure 1-26 “Provisioning Ethernet and serial ports” in *Provisioning and Operating Procedures*, 323-1701-310.

—continued—

Procedure 13-21 (continued)
SP—Intrasite Communication Failure

Step	Action
4	In System Manager, use the Fault–Active Alarms window to determine if the OSC raised a Circuit Pack Failed or Circuit Pack Missing alarm.

If the OSC circuit pack	**Then**
failed	follow Procedure 15-1 “OSC—Circuit Pack Failed” in this book
is missing	follow Procedure 15-2 “OSC—Circuit Pack Missing” in this book

5

If	**Then**
the alarm clears	you have completed this procedure
the alarm remains	go to the next step

6 Reseat the SP. Follow Procedure 3-68 “Reseating a circuit pack” in *Provisioning and Operating Procedures,* 323-1701-310.

If	**Then**
the alarm clears	you have completed this procedure
the alarm remains	go to the next step

7 Replace the SP circuit pack. Follow Procedure 3-13 “Replacing an SP circuit pack” in *Maintenance and Replacement Procedures* 323-1701-546.

If	**Then**
the alarm clears	the removed circuit pack has faults. You have completed this procedure.
the alarm remains	the circuit pack is not the problem. Reseat the original circuit pack. Contact your next level of support.

—end—

Procedure 13-22
SP—Software Below Baseline

This alarm is raised on Optical Metro 5100 shelves only. It is not raised on Optical Metro 5200 shelves.

Probable cause

This alarm becomes active when an SP circuit pack containing a release 3.2 or 4.0 application software load is seated into an Optical Metro 5100 shelf.

Impact

Minor, non-service-affecting.

Action

Step	Action
1	Upgrade the SP circuit pack to the correct release. Refer to Procedure 3-13, "Replacing an SP circuit pack" in *Maintenance and Replacement Procedures*, 323-1701-546.

If	Then
the alarm clears	you have completed this procedure
the alarm remains	go to the next step

Step	Action
2	Obtain a current software load and perform a software upgrade. Refer to the appropriate change application procedure (CAP) for information on performing the upgrade.

If	Then
the alarm clears	you have completed this procedure
the alarm remains	contact your next level of support

—end—

Clearing PM alarms

Performance Monitoring (PM) threshold crossing alerts (TCA) for facility performance parameters (PP) are reported as alarms with warning severity or summary alarms with minor severity in the Active Alarms window, and events or summary events in the Event Console and Event History of the System Manager.

TCAs occur when all of the following conditions apply:

- the current bin values of the PPs are equal to or bigger than the bin threshold values
- TCA reporting status is enabled
- if TCAs are alarms and they are not masked by any alarms or events

TCA alarms can be masked by the following alarms and events:

- Circuit Pack Missing alarm
- Circuit Pack Failed alarm
- Circuit Pack Mismatch alarm
- Operational state change: out-of-service event.

  Note: TCA alarms or summary alarms on Optical, Wan, and Path ports are masked by client/line facility out-of-service events. Aggregate alarms are masked by aggregate facility out-of-service events. If there is no aggregate facility object, for example, OCI SRM or OCI SRM ESCON, the aggregate TCAs are masked when the equipment is out-of-service. TCA events or summary TCA events are not masked by OOS events.

- Delete Equipment event

Depending on the circuit pack type, TCAs can be raised on some or all of the following port types: Optical (client or line), Wan, Path and Aggregate ports. To clear PM alarms:

- always clear all other traffic affecting alarms before looking at PM facility TCAs.
- when clearing TCA alarms, always follow the traffic flow. At a specific location, identify where the overhead or signal originates (that the performance monitoring is based on), that is, from circuit packs within the Optical Metro 5100/5200 network or before the signal enters the Optical Metro 5100/5200 network. You only need to look at the part of the network from where the signal originates and the current point.
- on the same circuit pack, always clear TCAs on the aggregate port, path port, and then wan port (if applicable)
- at the same location, always clear section TCAs before line TCAs.

Figure 14-1
TCAs

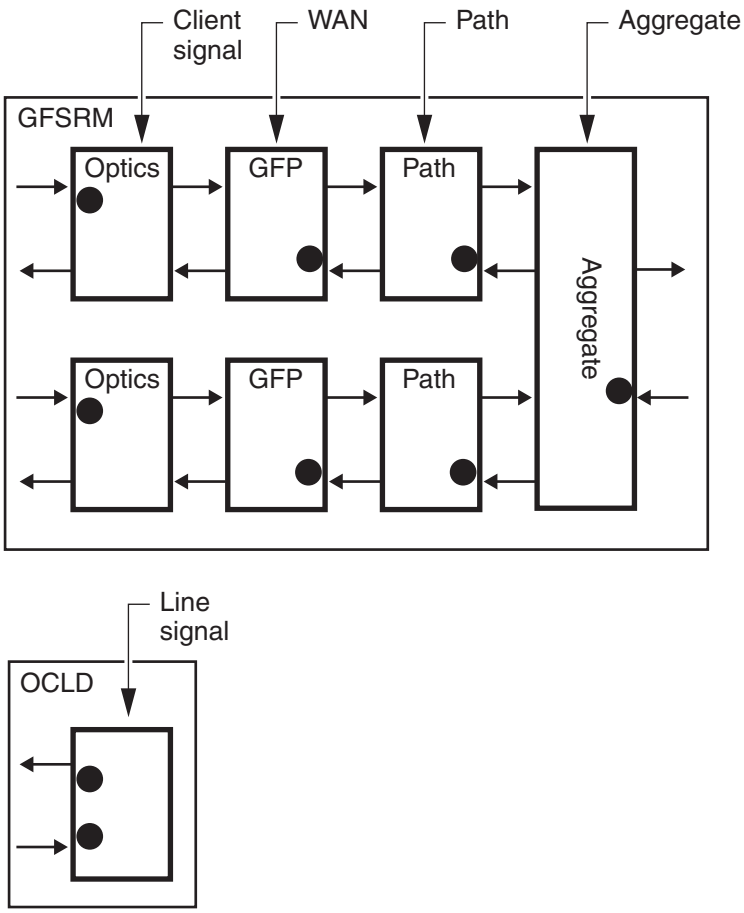

Use Procedure 14-1, "Clearing facility PM alarms" on page 14-7 to clear PM alarms. Perform the steps in the order that they appear. After you clear the alarm, stop the procedure. If the alarm does not clear, consult your next level of technical support.

These procedures can also be used to prevent PM events from showing up once every 15 minutes or every day depending on the configured facility TCA type in System Manager.

Table 14-1 relates the different behavior of PM counts with alarms and problems that can cause the TCA alarms to be raised. This table provides a summary of the recommended actions to assess and address Tx and Rx TCA alarms. The recommended actions are shown in Procedure 14-1.

Table 14-1
Assessing PM alarms

Case	PM count behavior	Probable cause	Action
1	Gradual increase for CV (or CVS, EBS) and ES (ESS), but not for SES(SESS), SEFS (or OFSS, SEFSS) and UAS (or UASS, if supported)	• a dirty or broken fiber or connector • Low Optical Power Warning alarm • High Optical Power alarm • High Optical Power Warning alarm	Clean or replace optical fibers or connectors. For information on cleaning, see "Cleaning connectors" in *Installing Optical Metro 5200 Shelves and Components,* 323-1701-201. Refer to appropriate procedures in the "Clearing OCI and OCI SRM alarms", "Clearing OCLD alarms", "Clearing OTR alarms" or "Clearing Muxponder alarms" in *Trouble Clearing and Alarm Reference Guide*, 323-1701-542..
2	Gradual increase for ES, SES, and UAS (if supported), but not for CV (or CVS, EBS) and SEFS (or SEFSS, OFSS)		
3	Occasional spike	• clearing alarms • shelf power outage • fiber kink	Reset all PM counts to zero on the shelf, as outlined in the procedures in "Performance monitoring procedures" in *Provisioning and Operating Procedures,* 323-1701-310. Monitor the counts. If TCAs are raised again, follow the action steps indicated in this table for continual or gradual increase of PM counts.

Table 14-1 (continued)
Assessing PM alarms

Case	PM count behavior	Probable cause	Action
4	Continual increase for ES (ESS), SES (or SESS), SEFS (or OFSS, SEFSS) and UAS (or UASS, if supported), yet CV (or CVS, EBS) remain unchanged	• Loss of Clock alarm • Loss of Signal alarm • Loss of Frame alarm • Loss of Lock alarm • Alarm Indication Signal alarm • Invalid Signal alarm • Low Optical Power Warning alarm • High Optical Power alarm • High Optical Power Warning alarm	Refer to appropriate alarm clearing procedures in the "Clearing OCI and OCI SRM alarms", "Clearing OCLD alarms" or "Clearing Muxponder alarms" chapters in the *Trouble Clearing and Alarm Reference Guide*, 323-1701-542.
5	Continual increase for CVL (EBL) and ESL	Same as case 1. This should not happen if section PP counts are clear.	Same as case 1.
6	UASL continual increases but not CVL, ESL, SESL, or section PPs	• Low Optical Power Warning alarm • High Optical Power alarm • High Optical Power Warning alarm • Very dirty fiber or broken fiber • Line Alarm Indication signal	Same as case 4.
7	Continual increase for CV-LFE (EB-LFE) and ES-LFE	Same as in case 1 but faults are on the far-end network element.	Same as case 1, but for far-end network element.
8	Continual increase for UAS-LFE	The far-end equipment has indicated faults on its receiving signal, such as: • Line Alarm Indication signal • Loss of Frame • Loss of Signal • severe bit errors	Same as case 4, but for far-end network element.
9	Continual increase for CVP(EBP), ESP but no line and section error on the aggregate port	For OCI SRM ESCON and OCI SRM, this may indicate circuit pack defect. For OCI SRM GbE/FC, this may indicate network faults on that path before entering Optical Metro 5100/5200 network.	For OCI SRM ESCON and OCI SRM, contact your next level of support. For OCI SRM GbE/FC, contact the network administrator for the other network.
10	Continual increase for UASP but no line and section error on the aggregate port	Same as case 9.	Same as case 9.

Table 14-1 (continued)
Assessing PM alarms

Case	PM count behavior	Probable cause	Action
11	Continual increase for CV-PFE (EB-PFE), ES-PFE but no line and section error on the aggregate port	This path has faults before entering the Optical Metro 5100/5200 network.	Contact the network administrator for the other network. If the path header originates from the Optical Metro 5100/5200 network, contact your next level of support.
12	Continual increase for UAS-PFE but no line and section error on the aggregate port	The far-end equipment has indicated faults on its receiving signal at this path, such as: • path Alarm Indication Signal • path Loss of Pointer • severe bit errors	Same as in case 11.
13	Continual increase ES in SFC PM mode but not FC	Continual traffic affecting defects exist on this circuit pack.	Refer to "Performance monitoring description" in *Software and User Interface*, 323-1701-101, for list of different traffic affecting defects for every circuit pack type. Refer to the appropriate alarm clearing procedures for the corresponding circuit pack.
14	Continual increase FC and ES in SFC PM mode	Short span of traffic affecting defects occurs constantly. Circuit pack defects Interoperability problem with other network elements.	Refer to "Performance monitoring description" in *Software and User Interface*, 323-1701-101, for list of different traffic affecting defects for every circuit pack type. Refer to the appropriate alarm clearing procedures for the corresponding circuit pack. Contact your next level of support if required.

Before you begin

Read "Troubleshooting the Optical Metro 5100/5200" chapter in Part 1 of *Trouble Clearing and Alarm Reference Guide*, for detailed information on how to respond to alarm indicators (audible alarms and lamps). The "Alarm description" chapter in Part 1 of *Trouble Clearing and Alarm Reference Guide*, explains events, warnings, and error messages.

If you require other information on PMs, refer to the "Performance monitoring description" chapter in *Software and User Interface,* 323-1701-101, and the "Performance monitoring procedures" chapter in *Provisioning and Operating Procedures*, 323-1701-310.

Precautions

CAUTION
Risk of equipment damage
Wear a grounded antistatic wrist strap connected to the shelf maintenance panel, or shoe straps, when you handle the equipment. Make sure you know how to handle electronic components correctly before you begin trouble clearing procedures. If you handle the equipment incorrectly, you can damage static-sensitive components.

CAUTION
Risk of shelf malfunction
It is recommended that you do not use a cellular phone in proximity to the Optical Metro 5100/5200 equipment. The use of cellular phones in proximity to the Optical Metro 5100/5200 equipment can cause the shelf to malfunction.

Procedure list

Table 14-2 lists the procedure in this chapter.

Table 14-2
Performance monitoring procedure

Procedure	Page
14-1 Clearing facility PM alarms	14-7

Procedure 14-1
Clearing facility PM alarms

Use this procedure to clear facility PM alarms.

PM alarms can occur anywhere in an Optical Metro 5100/5200 network. To determine the location of a PM alarm, first locate the faulty section in the network by comparing the bit errors of a PM collection point with those of the adjacent point. If the bit errors do not match, it means the section between the two points is faulty. Once the faulty section is located, isolate the cause of the TCAs within the section.

Figure 14-2 shows an example of how to do PM alarm analysis in an Optical Metro 5100/5200 network.

Figure 14-2
Example for PM alarm analysis

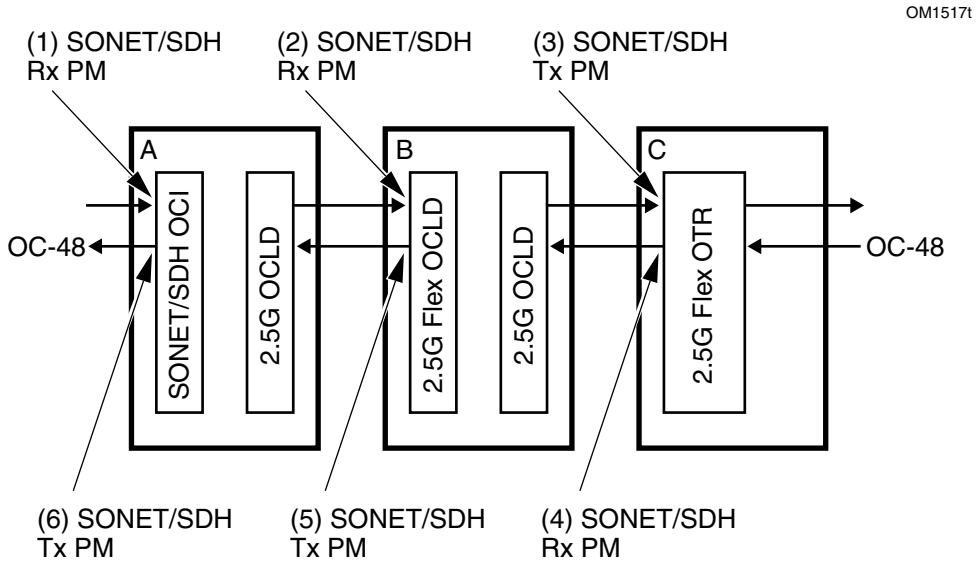

—continued—

Procedure 14-1 (continued)
Clearing facility PM alarms

In this example, SONET OC-48 traffic enters the SONET/SDH OCI and 2.5 Gbit/s Flex OCLD at Shelf A. Then the traffic goes to the 2.5 Gbit/s Flex OCLD and 2.5 Gbit/s OCLD at the pass-through Shelf B. Finally the traffic drops after exiting the 2.5 Gbit/s Flex OTR at Shelf C.

The following are the steps to locate the faulty section in this example:

1 If a TCA is raised at point 3 in Shelf C, query the PM counts at point 1, which is the entry point of the Optical Metro 5100/5200 network.

2 If the counts at point 1 are not clear, the fault is either from the client signal or the fiber connecting the client to the SONET/SDH OCI in Shelf A. The faulty section is between the subtending equipment and the entry point of the Optical Metro 5100/5200 network. Use the steps in the Action section of this procedure to clear the TCA in the section.

3 If the counts at point 1 are clear, query the PM counts at point 2.

4 If the counts at point 2 are not clear, the fault is between point 1 and point 2. Use the steps in the Action section of this procedure to clear the TCA.

5 If the counts at point 2 are clear, query the PM counts at point 3.

6 If the counts at point 3 are not clear, the fault is between point 2 and point 3. Use the steps in the Action section of this procedure to clear the TCA.

After the faulty section is located, there are several factors to assess when isolating the cause of the TCA within the section. The cause does not necessarily lie where the TCA is raised. Any circuit packs and connections within the faulty section can cause the TCA.

In Figure 14-2 for example, if the section between points 1 and 2 is found to be faulty, all the alarms and components between the two points need to be examined. Check the following components in the faulty section:

- optical fibers and connectors on the OCI and OCLD circuit packs in Shelf A
- OCLD in Shelf A
- optical fibers and connectors between the OCLD in Shelf A and the OCLD in Shelf B
- OCLD in Shelf B

In addition, because System Manager often reports TCAs on several performance parameters at the same time, parameter/TCA groupings can indicate a common underlying cause. The way in which a PM count rises also provides clues to the underlying cause of the threshold crossing.

—continued—

Procedure 14-1 (continued)
Clearing facility PM alarms

Table 14-1 on page 14-3 relates the different behavior of PM counts with alarms and problems that can cause the TCA alarms to be raised. This table provides a summary of the recommended actions to assess and address Tx and Rx TCA alarms. The recommended actions are detailed in this procedure.

> ***Note:*** You can clear the TCA alarm by increasing the corresponding TCA thresholds.

Applicable alarms

Facility TCAs for facility PPs are reported as alarms with warning severity in the Active Alarms window or as events in the Events Console and Event History of the System Manager, depending on the configuration of the shelf level facility TCA type. TCAs are based on the current 15-minute or 1-day intervals for facility PPs. This procedure applies to the following alarms and events:

Section

- TCA - CVS 15 Min
- TCA - EBS 15 Min
- TCA - ESS 15 Min
- TCA - OFSS 15 Min
- TCA - SESS 15 Min
- TCA - SEFSS 15 Min
- TCA - UASS 15 Min
- TCA - CVS 1 Day
- TCA - EBS 1 Day
- TCA - ESS 1 Day
- TCA - OFSS 1 Day
- TCA - SESS 1 Day
- TCA - SEFSS 1 Day
- TCA - UASS 1 Day

—continued—

Procedure 14-1 (continued)
Clearing facility PM alarms

Line

- TCA - CVL 15 Min
- TCA - EBL 15 Min
- TCA - ESL15 Min
- TCA - SESL 15 Min
- TCA - UASL 15 Min
- TCA - CV-LFE 1 Day
- TCA - EB-LFE 1 Day
- TCA - ES-LFE 1 Day
- TCA - SES-LFE 1 Day
- TCA - UAS-LFE 1 Day

Path

- TCA - CVP 15 Min
- TCA - EBP 15 Min
- TCA - ESP15 Min
- TCA - SESP 15 Min
- TCA - UASP 15 Min
- TCA - CV-PFE 1 Day
- TCA - EB-PFE 1 Day
- TCA - ES-PFE 1 Day
- TCA - SES-PFE 1 Day
- TCA - UAS-PFE 1 Day

—continued—

Procedure 14-1 (continued)
Clearing facility PM alarms

Non-standard

- TCA - CV 15 Min
- TCA - ES 15 Min
- TCA - FC 15 Min
- TCA - FEC-CE 15 Min
- TCA - FEC-UF 15 Min
- TCA - SEFS 15 Min
- TCA - SES 15 Min
- TCA - UAS 15 Min
- TCA - CV 1 Day
- TCA - ES 1 Day
- TCA - FC 1 Day
- TCA - FEC-CE 1 Day
- TCA - FEC-UF 1 Day
- TCA - SEFS 1 Day
- TCA - SES 1 Day
- TCA - UAS 1 Day

Summary

- Summary TCA15 Min
- Summary TCA1 Day

Probable cause

At least one performance parameter threshold has been crossed. One or more of the following conditions apply:

- another alarm is affecting PMs
- a dirty fiber, a dirty connector or a fiber kink between circuit packs and the subtending equipment
- a dirty fiber, a dirty connector or a fiber kink within Optical Metro 5100/5200 equipment
- a defective local circuit pack
- the corresponding threshold has been set too low

—continued—

Procedure 14-1 (continued)
Clearing facility PM alarms

Impact

These alarms indicate that errors in excess of a provisioned level were observed. Threshold crossing alarms for facility counts clear automatically at the end of each interval.

Facility TCAs are raised as alarms with warning severity or as events.

Masking

TCAs can be masked by the following alarms and events:

- Circuit Pack Missing alarm
- Circuit Pack Failed alarm
- Circuit Pack Mismatch alarm
- Operational state change: out-of-service event
- Delete Equipment event

This alarm is masked if the facility is out-of-service.

Requirements

Before you begin, review Table 14-1 on page 14-3 for indicators that match your observations in System Manager.

You must be logged in to the System Manager to perform this procedure. To log in to the network, follow Procedure 1-1, "Logging into the network" in *Provisioning and Operating Procedures*, 323-1701-310. To view alarms, click on the Fault tab and then click on the Active Alarms tab.

You must have a network topology diagram and a list of the channel assignments provisioned in your network.

—continued—

Procedure 14-1 (continued)
Clearing facility PM alarms

Precautions

CAUTION
Risk of service interruption in an unprotected network
The recovery action detailed in this procedure can affect service if the network is unprotected. To verify if you can add path protection to you network, refer to Chapter 3, "Supported configurations" in *Network Planning and Link Engineering*, 323-1701-110. To add path protection to an unprotected network, see Procedure 3-47, "Adding path protection to an unprotected path" in *Provisioning and Operating Procedures*, 323-1701-310.

CAUTION
Risk of laser radiation
The Optical Metro 5100/5200 operates up to a Hazard Level of k x 3A (IEC 60825-2:2000) or 1M (IEC 60825-2:2004). Use only viewing instruments with proper optical attenuation.

CAUTION
Risk of affecting network reliability
Make sure that all connectors are cleaned before you make the connections (or re-connections) described in this procedure. For cleaning information, see the chapter "Cleaning connectors" in *Installing Optical Metro 5200 Shelves and Components*, 323-1701-201.

CAUTION
Risk of damage to equipment and fiber
Make sure that the bulkhead connectors are lowered and snapped into place before closing the drawer. Failure to do so could cause damage to the connector unit, the fibers attached to the connector unit, or both.

Observe the minimum bend radius of 1.18-inches (30-mm) for the patch cords. Always use the fiber management components in the drawer to route the fiber.

Allow for sufficient slack in the fibers entering and exiting the drawer. If sufficient slack is not left, the fibers can become stretched and damaged when the drawer is opened.

—continued—

Procedure 14-1 (continued)
Clearing facility PM alarms

Action

Step	Action
1	Use the network topology diagram and the Active Alarms window in the System Manager to locate the faulty section in the network (see Figure 14-2 on page 14-7 and the explanation that follows it).
2	Identify where the overhead or signal originates (that the performance monitoring is based on) within the Optical Metro 5100/5200 network, or identify the head-end terminal shelf if the signal or overhead originates outside of the Optical Metro 5100/5200 network.
3	To locate the faulty section in the network, query the PM counts at each facility, beginning with the starting point. If the PM counts are clear, query the nearest downstream PM facility until you find the first facility with PM counts. To query PM counts, refer to Procedure 7-1 "Making a PM query" in *Provisioning and Operating Procedures,* 323-1701-310. For each circuit pack, you need to query the PM location in the following sequence: **a.** aggregate **b.** path **c.** WAN **d.** client/line port

4

If	Then
PM counts have started to increase at the head-end terminal shelf	the problem either originates with the client transmission, or there is a dirty fiber or connector at the head-end terminal shelf. Go to step 5.
otherwise	the problem can originate anywhere between the last PM point and the one you are working on within the Optical Metro 5100/5200 network. Go to step 9.

5 In the Active Alarms window, determine if there are any active alarms at the upstream terminal shelf. Review Table 14-1 on page 14-3 for indicators that match your observations and take appropriate action.

6

If alarms are	**Then** go to
raised at the upstream terminal shelf	step 7
not raised at the upstream terminal shelf	step 9

—continued—

Procedure 14-1 (continued)
Clearing facility PM alarms

Step	Action
7	Follow the procedures in this book to clear the alarms on the upstream terminal shelf. ***Note:*** Clearing alarms can cause PM counts to spike and cross thresholds. Refer to the Occasional spike cell in Table 14-1 on page 14-3 for assistance.
8	Reset the PM counts on the shelf and observe the network. Follow Procedure 7-9 "Performing shelf-level operations" in *Provisioning and Operating Procedures,* 323-1701-310.

If the PM counts are	**Then**
not increasing	you have completed this procedure
increasing	go to step 9

Step	Action
9	In the System Manager, select the entire network. Click on the Connections tab and then click on the Channel Assignments tab.
10	

If the path is	**Then**
protected	go to step 11
unprotected	see the precautionary message in step 11

11

CAUTION
Risk of traffic loss
If the system is unprotected, traffic cannot be switched and traffic can be lost during this procedure. Advise the network administrator of a possible loss of traffic before you continue to the next step.

Switch traffic off the span where the alarmed OFA circuit pack is located. Follow Procedure 4-7, "Switching traffic off a span in a path-protected network" in *Provisioning and Operating Procedures*, 323-1701-310.

12 Clean or replace optical fibers and connectors. Clean the connectors on all the circuit packs, test sets, and subtending equipment in the faulty section of the network, including the facility where the PM counts have started increasing. Clean the optical fibers at the OMX head-end terminal shelf. For information on cleaning, see "Cleaning connectors" in *Installing Optical Metro 5200 Shelves and Components,* 323-1701-201.

13 Reset the PM counts on the terminal shelf and observe the network. Refer to Procedure 7-9 "Performing shelf-level operations" in *Provisioning and Operating Procedures,* 323-1701-310.

—continued—

Procedure 14-1 (continued)
Clearing facility PM alarms

Step	Action

14

If the PM counts are	**Then**
no longer increasing	go to step 23
increasing	the problem originates from the client subtending equipment. No further action is required. You have completed this procedure.

15 The problem can originate anywhere between the last facility where PM counts are seen and the facility that you are working on within the Optical Metro 5100/5200 network. Start with the associated circuit pack on the upstream optical path and work your way through the pass-through shelves in the network in order. At each site, perform step 16 to step 22.

16 In the System Manager, select the entire network. Click on the Connections tab and then click on the Channel Assignments tab.

17

If the path is	**Then** go to
protected	step 18
unprotected	step 19

18

CAUTION
Risk of traffic loss
If the system is unprotected, traffic cannot be switched and traffic can be lost during this procedure. Advise the network administrator of a possible loss of traffic before you continue to the next step.

Switch traffic off the span where the alarmed OFA circuit pack is located. Follow Procedure 4-7, "Switching traffic off a span in a path-protected network" in *Provisioning and Operating Procedures*, 323-1701-310.

19 Clean or replace optical fibers and connectors. Clean the connectors on all the circuit packs, test sets, and subtending equipment in the faulty section of the network, including the facility where the PM counts have started increasing. Also clean the optical fibers at the OMX.

For cleaning procedures, see "Cleaning connectors" in *Installing Optical Metro 5200 Shelves and Components,* 323-1701-201.

20 Reset the PM counts on the shelf and observe the network. Refer to Procedure 7-9 "Performing shelf-level operations" in *Provisioning and Operating Procedures,* 323-1701-310.

—continued—

Procedure 14-1 (continued)
Clearing facility PM alarms

Step	Action	
21	**If**	**Then** go to
	the PM counts are no longer increasing	step 23
	otherwise	step 22
22	**If** the PM counts	**Then** go to
	are no longer increasing and the site you are working on is the egress terminal shelf	step 23
	are no longer increasing and the site you are working on is not the egress terminal shelf	where the next downstream PM counts are seen. Go to step 16.
	continue to cross thresholds	step 23
23	If the counts continue to cross thresholds after you have worked your way through each Optical Metro 5100/5200 shelf in the optical path, contact Nortel Networks Technical assistance service telephone numbers.	
24	**If**	**Then**
	at step 11 or step 18 you performed Procedure 4-7, "Switching traffic off a span in a path-protected network" in *Provisioning and Operating Procedures*, 323-1701-310	re-route traffic to the original path; follow Procedure 3-49, "Removing a manual, force, or lockout switch from a protection path"; you have completed this procedure
	otherwise	you have completed this procedure

—end—

Clearing OSC alarms

Use the procedures in this chapter to clear OSC alarms. Perform the steps in each procedure in the order that they appear. After you clear the alarm, stop the procedure. If the alarm does not clear, contact your next level of technical support.

The OSC circuit pack has two OSC ports (OSC-E and OSC-W) and two wayside channel ports (WSC-E and WSC-W). Because the wayside channel (WSC) is carried through the OSC port, if alarms are raised on both an OSC port and a WSC port, start by troubleshooting the alarms on the OSC port.

For a description of OSC circuit packs, see the "OSC circuit packs" section in *Hardware Description*, 323-1701-102.

Table 15-1 lists the meaning of OSC indicator lamps.

Table 15-1
OSC circuit pack indicator lamps

Indicator lamp	Color	State	Meaning
LOS	yellow	on	There is either a loss of signal or a loss of frame in the Rx direction of the OSC port.
		off	There is no loss of signal or loss of frame in the Rx direction of the OSC port.
ACT	green	on	The OSC port facility is in-service.
		off	The OSC port facility is out-of-service.
LNK	green	on	The Ethernet link is functioning and the WSC port is in-service.
		off	One of the following conditions exists • the Ethernet link has failed • the Ethernet link is in pass-through mode • the WSC port is out-of-service

Table 15-1 (continued)
OSC circuit pack indicator lamps

Indicator lamp	Color	State	Meaning
DAT	green	on	Data is transmitted or received on the WSC port. ***Note:*** The lamp is on for at least 20 milliseconds.
		off	No data is transmitted or received on the WSC port.
STATUS	green/red	green	The circuit pack is functioning normally and the inventory is in-service.
		red	The circuit pack has failed. ***Note:*** The indicator lamp is red during power-up.
		off	The circuit pack is functioning normally and the inventory is out-of-service.

Before you begin

Read "Troubleshooting the Optical Metro 5100/5200" chapter in Part 1 of the *Trouble Clearing and Alarm Reference Guide*, for detailed information on how to respond to alarm indicators (audible alarms and lamps). The "Alarm description" chapter in Part 1 of the *Trouble Clearing and Alarm Reference Guide* explains events, warnings, and error messages.

ATTENTION

Before troubleshooting any procedures related to IFS, make sure you verify the site topology by successfully completing Procedure 1-8 "Testing site fibering for intrasite fault sectionalization" in *Testing and Equalization Procedures*, 323-1701-222.

For more information on the alarms raised by IFS, see "Principal alarms raised by IFS" in Chapter 2, "Troubleshooting fault sectionalization and System Level Equalization Control" in this book.

Requirements

CAUTION
Risk of electrostatic discharge
Observe all antistatic precautions when handling the circuit packs.

Exposed circuit packs can be damaged by electrostatic discharge. When handling circuit packs always wear a wrist strap that is grounded to the shelf maintenance panel, and shoe straps if necessary. For more information, refer to the "Handling circuit packs" section of "Isolating faults that do not generate alarms" in Part 1 of the *Trouble Clearing and Alarms Reference Guide*.

CAUTION
Risk of laser radiation
The Optical Metro 5100/5200 operates up to a Hazard Level of k x 3A (IEC 60825-2:2000) or 1M (IEC 60825-2:2004). Use only viewing instruments with proper optical attenuation.

Precautions

CAUTION
Risk of loss of communication
When you trouble shoot an OSC alarm at a site where the OSC is the only means of overhead communications, there is a risk of losing communications with remote shelves.

CAUTION
Risk of affecting network reliability
Make sure that all connectors are cleaned before you make the connections (or re-connections) described in this procedure. For cleaning information, see the chapter "Cleaning connectors" in *Installing Optical Metro 5200 Shelves and Components*, 323-1701-201.

Procedure list

Table 15-2 lists the procedures in this chapter and indicates whether or not the alarm is masked if the equipment or facility that raises the alarm is out-of-service.

Table 15-2
Procedures for clearing OSC alarms

Procedure	Page	Alarm is masked if equipment or facility is OOS
15-1 OSC—Circuit Pack Failed	15-6	Equipment
15-2 OSC—Circuit Pack Missing	15-7	Equipment
15-3 OSC—Duplicate Optical System Identifier	15-9	Equipment
15-4 OSC—East/West Fiber Mismatch	15-11	Facility
15-5 OSC—East or West Overhead Link Failure, East or West Remote Overhead Link Failure	15-13	Not applicable
15-6 OSC—Facility Loopback	15-18	Not applicable
15-7 OSC—Fault Sectionalization Unresolved	15-19	Not applicable
15-8 OSC—Incomplete Provisioning	15-21	Not applicable
15-9 OSC—Inter-card Communication Failure	15-23	Equipment
15-10 OSC—Intrasite Communication Failure	15-25	Not applicable
15-11 OSC—Invalid Data	15-27	Facility
15-12 OSC—Invalid Provisioning	15-32	Not applicable
15-13 OSC—Invalid Signal, Remote Invalid Signal	15-32	Facility
15-14 OSC—Loss of Frame, Remote Loss of Frame	15-37	Facility
15-15 OSC—Loss of Link	15-42	Facility
15-16 OSC—Loss of Signal, Remote Loss of Signal	15-44	Facility
15-17 OSC S/C—Optical Signal Failure (Rx) or (Tx)	15-49	Not applicable
15-18 OSC—Optical System Identifier Mismatch	15-53	Equipment
15-19 OSC S/C—Optical Tray Mismatch	15-54	Equipment
15-20 OSC S/C—Optical Tray Missing	15-57	Equipment
15-21 OSC—Remote Fault Sectionalization Not Responding	15-59	Not applicable
15-22 OSC—Shelf Input Failure	15-62	Not applicable

Table 15-2 (continued)
Procedures for clearing OSC alarms

Procedure	Page	Alarm is masked if equipment or facility is OOS
15-23 OSC—Site Input Failure	15-65	Not applicable
15-24 OSC—Unequipped Remote Port	15-67	Facility
15-25 OSC—Unknown Circuit Pack	15-68	Equipment
15-26 OSC—Wayside Alarm Indication Signal	15-70	Facility

Procedure 15-1
OSC—Circuit Pack Failed

Probable cause

This alarm becomes active when the circuit pack detects an equipment failure.

Impact

Major, non-service-affecting.

> ***Note:*** A Circuit Pack Failed condition does not cause the circuit pack to disable itself. Some services such as Overhead Communication and WSC may still be functional.

Precautions

> **CAUTION**
> **Risk of affecting network reliability**
> Make sure that all connectors are cleaned before you make the connections (or re-connections) described in this procedure. For cleaning information, see the chapter "Cleaning connectors" in *Installing Optical Metro 5200 Shelves and Components*, 323-1701-201.

Action

Step	Action
1	Reseat the OSC. Follow Procedure 3-68 "Reseating a circuit pack" in *Provisioning and Operating Procedures,* 323-1701-310.

If	Then
the alarm clears	you have completed this procedure
the alarm remains	go to the next step

Step	Action
2	Replace the OSC. Follow Procedure 3-9 "Replacing an OSC circuit pack" in *Maintenance and Replacement Procedures,* 323-1701-546.

If	Then
the alarm clears	the removed circuit pack has faults. You have completed this procedure.
the alarm remains	the circuit pack is not the problem. Reseat the original circuit pack. Contact your next level of support.

—end—

Procedure 15-2
OSC—Circuit Pack Missing

Probable cause

This alarm becomes active when the provisioned slot (20) does not contain an OSC circuit pack or the OSC is not correctly seated in the slot.

Impact

Major, non-service-affecting.

Precautions

CAUTION
Risk of affecting network reliability
Make sure that all connectors are cleaned before you make the connections (or re-connections) described in this procedure. For cleaning information, see the chapter "Cleaning connectors" in *Installing Optical Metro 5200 Shelves and Components*, 323-1701-201.

Action

Step	Action
1	Make sure that the slot contains an OSC circuit pack.

If	Then
the slot is empty but should contain an OSC	insert and seat an OSC in the slot. Follow Procedure 7-1 "Inserting circuit packs" in *Installing Optical Metro 5200 Shelves and Components* 323-1701-201 OR Procedure 7-1 "Inserting circuit packs in an Optical Metro 5100 shelf" in *Installing Optical Metro 5100 Shelves and Components* 323-1701-210. Go to the next step.
the slot is intentionally left empty	go to step 3
the slot contains an OSC	go to step 4

—continued—

Procedure 15-2 (continued)
OSC—Circuit Pack Missing

Step	Action

2

If	Then
the alarm clears	you have completed this procedure
the alarm remains	go to step 4

3 To clear the alarm if the slot is not used, follow these steps:

a. Take the OSC OOS. Follow Procedure 3-13 “Taking a circuit pack facility or SFP facility out-of-service”, and then Procedure 3-8 “Taking a circuit pack or SFP out-of-service” in *Provisioning and Operating Procedures*, 323-1701-310.

b. If there are facilities associated with the OSC, delete them. Follow Procedure 3-14 “Deleting a circuit pack or SFP facility” in *Provisioning and Operating Procedures*, 323-1701-310.

c. Delete the OSC equipment. Follow Procedure 3-9 “Deleting a circuit pack or SFP from the inventory” in *Provisioning and Operating Procedures*, 323-1701-310.

If	Then
the alarm clears	you have completed this procedure
the alarm remains	contact your next level of support

4 Reseat the OSC. Follow Procedure 3-68 “Reseating a circuit pack” in *Provisioning and Operating Procedures,* 323-1701-310.

If	Then
the alarm clears	you have completed this procedure
the alarm remains	go to the next step

5 Replace the OSC. Follow Procedure 3-9 “Replacing an OSC circuit pack” in *Maintenance and Replacement Procedures,* 323-1701-546.

If	Then
the alarm clears	the removed circuit pack has faults. You have completed this procedure.
the alarm remains	the circuit pack is not the problem. Reseat the original circuit pack. Contact your next level of support.

—end—

Procedure 15-3
OSC—Duplicate Optical System Identifier

Probable cause

This alarm becomes active when the intrasite fault sectionalization (IFS) feature is enabled and two OSC circuit packs at the same site and hubbing group number have the same optical system identifier (OSID).

If there are two OSC circuit packs at a site, they must have different OSIDs.

Impact

Minor, non-service-affecting.

Precautions

CAUTION
Risk of interfering with alarm reporting
It is essential that the OSID for all line-facing equipment is provisioned correctly for bridge sites, for hub and spoke rings, and for rings with intrasite fault sectionalization (IFS). Refer to the "Rules for provisioning OSIDs" in *Provisioning and Operating Procedures*, 323-1701-310.

Know the network topology and exercise caution when provisioning OSIDs. Incorrect OSID provisioning can generate unnecessary alarms and can cause the IFS feature to operate incorrectly.

Action

Step	Action
1	Use a network topology diagram to determine OSC sites.
2	Refer to the "Rules for provisioning OSIDs" and the associated Precautions in Procedure 3-36 "Provisioning the optical system identifier (OSID)" in *Provisioning and Operating Procedures*, 323-1701-310. Make sure that the network topology conforms to these rules.

—continued—

Procedure 15-3 (continued)
OSC—Duplicate Optical System Identifier

Step	Action
3	**If** / **Then** the network topology conforms to the provisioning rules — go to the next step otherwise — contact your next level of support
4	In the System Manager, Selected Shelves panel, select one of the shelves that is equipped with an alarmed OSC at the site in question.
5	Select the Equipment tab.
6	Select the Inventory tab.
7	Double-click on the OSC circuit pack. *The Optical Metro Inventory dialog box appears.*
8	Read the OSID displayed in the Provisioning Data area.
9	**If** the OSID is / **Then** go to correct — step 17 incorrect — the next step
10	Disable the IFS feature. Deselect the “IFS Enabled” check box. ***Note:*** You must disable the IFS feature before changing the OSID.
11	Click **Apply**. *An IFS warning dialog box appears.* ***Note:*** Intrasite Fault Sectionalization may be impacted.
12	Click **Yes**.
13	Enter the correct OSID in the OSID field.
14	Enable the IFS feature. Select the “IFS Enabled” check box.
15	Click **OK**. *An IFS warning dialog box appears.*
16	Click **Yes**.
17	Repeat steps 4 through 16 for any other shelf at the same site that is equipped with an OSC and is raising this alarm.
18	**If** / **Then** the alarm clears — you have completed this procedure the alarm remains — contact your next level of support

—end—

Procedure 15-4
OSC—East/West Fiber Mismatch

Probable cause

This alarm becomes active against the OSC facility when the OSC circuit pack detects an incorrect fiber connection.

This alarm becomes active when one of the following conditions exists:

- fibers are incorrectly connected, for example the east OSC port is connected to another east OSC port, an East/West Fiber Mismatch alarm is raised
- a remote OSC facility is put into a loopback state

Note 1: The east port on an OSC must be connected to the west port on the OSC in the site immediately to the east. The west port must be connected to the east port of the OSC immediately to the west.

Note 2: If this alarm occurs with the East or West Overhead Link Failure alarm, it indicates that the two fibers (Rx and Tx) are not connected to the same OSC port.

Impact

Major, non-service-affecting.

Precautions

CAUTION
Risk of incorrect alarm reporting
Incorrect OSC fiber connection will inhibit the ability of the OSC circuit pack to correctly report Shelf Input Failure alarms.

CAUTION
Risk of affecting network reliability
Make sure that all connectors are cleaned before you make the connections (or re-connections) described in this procedure. For cleaning information, see the chapter "Cleaning connectors" in *Installing Optical Metro 5200 Shelves and Components*, 323-1701-201.

—continued—

Procedure 15-4 (continued)
OSC—East/West Fiber Mismatch

Action

Step	Action
1	Check the entry in the Port column on the Fault–Active Alarms window to determine where the alarm is raised. Use a network topology diagram to determine remote OSC sites.

If the entry is	**Then**
OSC-E	the alarm is raised on the east OSC port. Go to the next step.
OSC-W	the alarm is raised on the west OSC port. Go to the next step.

2 Use the System Manager to determine if OSC–Facility Loopback alarms are raised at the remote OSC site (facing the site with the “East/West Fiber Mismatch” alarm) or an adjacent OSC site.

If OSC–Facility Loopback alarms	**Then**
are raised	follow Procedure 15-6 “OSC—Facility Loopback”. Go to the next step.
are not raised	go to step 4

3

If	**Then**
the alarm clears	you have completed this procedure
the alarm remains	go to the next step

4 Check the wiring between OSCs. Make sure that the east port in this OSC is connected to the west port of the OSC in the shelf at the site to the east of this OSC.

If	**Then**
the fibering is incorrect	disconnect the fibers and connect them correctly. Go to the next step.
the fibering is correct	contact your next level of support

5

If	**Then**
the alarm clears	you have completed this procedure
the alarm remains	contact your next level of support

—end—

Procedure 15-5
OSC—East or West Overhead Link Failure, East or West Remote Overhead Link Failure

Probable cause

The East Overhead Link Failure or West Overhead Link Failure alarm indicates that the intershelf communication software is unable to communicate with the far-end equipment.

This alarm becomes active when one of the following conditions exists on either the local or one of the remote OSC circuit packs:

- the OSC East (port 1) or West (port 2) signal power is degraded
- the OSC optical fiber or connectors are dirty
- the OSC optical fiber is bent or coiled too much
- the OSC fibers are misfibered
- the OSC circuit pack is defective

Impact

Minor, non-service-affecting.

> ***Note:*** The OSC Overhead Communications is used to allow the management systems to communicate with the remote shelves. Since other paths of communication may exist, this condition may or may not prevent communication with the remote shelves.

—continued—

Procedure 15-5 (continued)
OSC—East or West Overhead Link Failure, East or West Remote Overhead Link Failure

Precautions

CAUTION
Risk of recovery procedures affecting WSC
Because the WSC is carried through the OSC port, recovery procedures can affect the WSC.

CAUTION
Risk of affecting network reliability
Make sure that all connectors are cleaned before you make the connections (or re-connections) described in this procedure. For cleaning information, see the chapter "Cleaning connectors" in *Installing Optical Metro 5200 Shelves and Components*, 323-1701-201.

Action

Step	Action
1	Check the entry in the Port column on the Fault–Active Alarms window to determine where the alarm is raised.

If the entry is	**Then**
OSC-E	the alarm is raised on the east OSC port. You require this information in step 2. Go to the next step.
OSC-W	the alarm is raised on the west OSC port. You require this information in step 2. Go to the next step.

2 Check alarms to make sure the corresponding upstream OSC circuit pack has not failed or is missing. Use a fiber topology diagram to determine the remote OSC sites.

If the alarm was raised on	**Then**
OSC-E	check the east OSC port at the local site and the west OSC port at the remote site
OSC-W	check the west OSC port at the local site and the east OSC port at the remote site

Note: Use a network topology diagram to determine the local and remote sites.

—continued—

Procedure 15-5 (continued)
OSC—East or West Overhead Link Failure, East or West Remote Overhead Link Failure

Step	Action
3	

If	Then
there is an alarm at the upstream OSC circuit pack	clear the alarm, and go to the next step
there is no alarm at the upstream OSC circuit pack	go to the next step

4 Make sure the OSC optical fiber is connected correctly at both ends. At the local site, check the connection between the OSC Rx/Tx ports and the OSC tray. At the remote site, check the connection between the OSC Rx/Tx ports and the OSC tray.

If	Then
the fibering is incorrect	disconnect the fibers and connect them correctly. Go to the next step.
the fibering is correct	go to step 6

Note: For information on correct OSC fibering, see Procedure 3-14, Procedure 3-15, Procedure 3-16, or Procedure 3-17 in *Connection Procedures*, 323-1701-221.

5

If	Then
the alarm clears	you have completed this procedure
the alarm remains	go to the next step

6 Using a power meter, check to see if the optical power at the Rx port of the alarming local OSC circuit pack is within the operational threshold. Write down the Rx power. Refer to Table 2-54 in *Technical Specifications,* 323-1701-180 for the OSC Rx operational threshold.

If the received power	**Then** go to
is within the operational threshold	step 9
is not within the operational threshold	the next step

—continued—

Procedure 15-5 (continued)
OSC—East or West Overhead Link Failure, East or West Remote Overhead Link Failure

Step	Action
7	Using a power meter, make sure that the transmitted power level of the corresponding remote OSC port is within the operational threshold. Refer to Table 2-54 in *Technical Specifications,* 323-1701-180 for the OSC Tx operational threshold.

If the transmitted power	**Then** go to
is within the operational threshold	step 9
is not within the operational threshold	the next step

8 Use the proper cleaning kit to clean the connectors between the OSC and the OSC tray. Specifically, clean those fibers attached to the local OSC Rx port and to the Tx Port on the remote OSC. For information on cleaning, see "Cleaning connectors" in *Installing Optical Metro 5200 Shelves and Components,* 323-1701-201.

— Clean each connector separately.

— Record the operating power level after you clean each connector and compare it to the value you wrote down, this will allow you to see if there is any improvement to the power levels.

CAUTION
Risk of loss of traffic across multiple bands
Do not clean any optical fibers on the optical fiber plant, or on connections to the OMX. This affects traffic over multiple bands. Clean only the fibers between the OSC circuit pack and the OSC tray.

If	**Then**
the alarm clears	you have completed the procedure
the alarm remains	go to the next step

—continued—

Procedure 15-5 (continued)
OSC—East or West Overhead Link Failure, East or West Remote Overhead Link Failure

Step	Action
9	Reseat the OSC circuit pack raising the East or West Overhead Link Failure alarm. Follow Procedure 3-68 “Reseating a circuit pack” in *Provisioning and Operating Procedures,* 323-1701-310.

If	Then
the alarm clears	you have completed this procedure
the alarm remains	go to the next step

Step	Action
10	Replace the OSC circuit pack raising the East Overhead Link Failure alarm. Follow Procedure 3-9 “Replacing an OSC circuit pack” in *Maintenance and Replacement Procedures,* 323-1701-546.

If	Then
the alarm clears	the removed circuit pack has faults. You have completed this procedure.
the alarm remains	the circuit pack is not the problem. Reseat the original circuit pack. Contact your next level of support

—end—

Procedure 15-6
OSC—Facility Loopback

A Facility Loopback alarm becomes active when the optical signal received at the OSC or WSC Rx input is being looped back to the OSC or WSC Tx output, without continuing through the circuit pack.

It is normal for this alarm to be raised when a Facility loopback is on for testing or maintenance purposes. You can only set a loopback when the facility is out-of-service.

Probable cause

This alarm becomes active when you perform a loopback and the loopback is active.

Impact

Minor, non-service-affecting.

Action

Step	Action	
1	Determine if the facility loopback is active for testing or maintenance purposes.	
2	**If** the loopback is	**Then**
	necessary for testing or maintenance activities	you have completed this procedure
	not necessary	go to the next step
3	Release the loopback if it is not necessary. Refer to Procedure 3-60 “Removing a loopback using the System Manager” in *Provisioning and Operating Procedures*, 323-1701-310.	
4	**If**	**Then**
	the alarm clears	you have completed this procedure
	the alarm remains	contact your next level of support

—end—

Procedure 15-7
OSC—Fault Sectionalization Unresolved

The intrasite fault sectionalization (IFS) feature identifies the root cause of input failures (for example OFA or APBE Loss of Signal or OMX Band Input Failure) through Optical Signal Failure Tx or Rx alarms, and masks the input failures. If IFS is unable to correlate to a root cause, the input failure alarms (OFA LOS or APBE LOS or OMX BIF) become active. In exceptional circumstances, IFS may not be able to conclude that it can identify the root cause. If this occurs, IFS is suspended at the site where the Fault Sectionalization Unresolved alarm is raised.

Probable cause

The intrasite fault sectionalization (IFS) feature identifies the root cause of input failures (for example OFA or APBE Loss of signal and OMX Band Input Failure) through Optical Signal Failure Tx and Rx alarms. When a root cause is identified, the IFS feature masks the critical input failure alarms with Band Alarm Indication Signal warnings.

This alarm occurs if IFS is unable to correlate a root cause for the active input failures in the system. In this case, IFS becomes suspended at every site where this alarm is active and the original input failure alarms are not masked. Manual investigation is required to clear the unmasked input failures. Once the issues are resolved IFS must be reset before the feature will correlate future input failures.

Impact

Major, non-service affecting.

> ***Note:*** When this alarm is active, IFS is enabled but is not sectionalizing faults.

Action

Step	Action
1	Use a fiber topology diagram to determine site locations and to help troubleshoot the other active alarms in the system.
2	Using System Manager, locate the shelf where this alarm is active.
3	Clear all other active alarms in the ring following the appropriate trouble clearing procedure.

—continued—

Procedure 15-7 (continued)
OSC—Fault Sectionalization Unresolved

Step	Action	
4	**If** the other active alarms in the system	**Then**
	are cleared	go to the next step
	remain	contact your next level of support
5	After clearing all other alarms, reset IFS feature by disabling and then re-enabling it at all sites where this alarm is raised. Follow Procedure 3-39 "Disabling intrasite fault sectionalization (IFS)" and Procedure 3-38 "Enabling intrasite fault sectionalization (IFS)" in *Provisioning and Operating Procedures*, 323-1701-310. After disabling and re-enabling the IFS feature, IFS may be able to correlate to a root cause.	
6	**If**	**Then**
	the alarm clears	you have completed this procedure
	the alarm remains	contact your next level of support

—end—

Procedure 15-8
OSC—Incomplete Provisioning

Probable cause

This alarm becomes active when

- there is more than one OSC circuit pack at a bridge site and intrasite fault sectionalization (IFS) is enabled on one OSC circuit pack, and another OSC has an unassigned optical system identifier (OSID)

  Note: This alarm is raised on the OSC circuit pack with the unassigned OSID.

- one or more line-facing circuit packs (OCLD, OTR, MOTR, OFA, or APBE) on the OSC shelf is assigned an OSID while the OSID of the OSC is unassigned
- two or more OSCs at the same site have the same OSID

Impact

Minor, non-service-affecting.

Precautions

CAUTION
Risk of interfering with alarm reporting
It is essential that the OSID for all line-facing equipment is provisioned correctly for bridge sites, for hub and spoke rings, and for rings with intrasite fault sectionalization (IFS). Refer to the "Rules for provisioning OSIDs" in *Provisioning and Operating Procedures*, 323-1701-310.

Know the network topology and exercise caution when provisioning OSIDs. Incorrect OSID provisioning can generate unnecessary alarms and can cause the IFS feature to operate incorrectly.

Action

Step	Action
1	Refer to the "Rules for provisioning OSIDs" and the associated Precautions in Procedure 3-36 "Provisioning the optical system identifier (OSID)" in *Provisioning and Operating Procedures*, 323-1701-310.

—continued—

Procedure 15-8 (continued)
OSC—Incomplete Provisioning

Step	Action	
2	**If**	**Then**
	there is more than one OSC circuit pack at a bridge site and IFS is enabled on one OSC, and another OSC has an OSID	assign an OSID to the OSC circuit pack that does not have an OSID assigned. Follow Procedure 3-36 “Provisioning the optical system identifier (OSID)” in *Provisioning and Operating Procedures*, 323-1701-310. Go to the next step.
	one or more line-facing circuit pack on the OSC shelf is assigned an OSID while the OSID of the OSC is unassigned	either unassign the OSID for the OSC that has an assigned OSID, or assign the OSID for all line-facing circuit packs. Follow Procedure 3-36 “Provisioning the optical system identifier (OSID)” in *Provisioning and Operating Procedures*, 323-1701-310. Go to the next step.
3	**If**	**Then**
	the alarm clears	you have completed this procedure
	the alarm remains	contact your next level of support

—end—

Procedure 15-9
OSC—Inter-card Communication Failure

Probable cause

This alarm becomes active when the SP circuit pack cannot communicate with the specified OSC circuit pack.

Impact

Major, non-service-affecting.

Precautions

ATTENTION

When you clear this alarm on Optical Metro 5100 shelves, at all times the SP, and at least one non-SP circuit pack that is carrying the database, must be seated in the shelf.

CAUTION

Risk of affecting network reliability

Make sure that all connectors are cleaned before you make the connections (or re-connections) described in this procedure. For cleaning information, see the chapter "Cleaning connectors" in *Installing Optical Metro 5200 Shelves and Components*, 323-1701-201.

Action

Step	Action
1	Using the Fault—Active Alarms window in System Manger, check to see if the Inter-card Communication Failure alarm is raised by more than one circuit pack in the shelf.

If	**Then** go to
the alarm is raised by only this circuit pack	the next step
the alarm is raised on multiple circuit packs	step 5

—continued—

Procedure 15-9 (continued)
OSC—Inter-card Communication Failure

Step	Action
2	Reseat the OSC. Follow Procedure 3-68 “Reseating a circuit pack” in *Provisioning and Operating Procedures,* 323-1701-310.

If	Then
the alarm clears	you have completed this procedure
the alarm remains	go to the next step

Step	Action
3	Reseat the SP. Follow Procedure 3-68 “Reseating a circuit pack” in *Provisioning and Operating Procedures,* 323-1701-310.

If	Then
the alarm clears	you have completed this procedure
the alarm remains	go to the next step

Step	Action
4	Replace the OSC. Follow Procedure 3-9 “Replacing an OSC circuit pack” in *Maintenance and Replacement Procedures,* 323-1701-546.

If	Then
the alarm clears	the removed circuit pack has faults. You have completed this procedure.
the alarm remains	the circuit pack is not the problem. Reseat the original circuit pack. Go to step 6.

Step	Action
5	Reseat the SP. Follow Procedure 3-68 “Reseating a circuit pack” in *Provisioning and Operating Procedures,* 323-1701-310.

If	Then
the alarm clears	you have completed this procedure
the alarm remains	go to the next step

Step	Action
6	Replace the SP circuit pack. Follow Procedure 3-13 “Replacing an SP circuit pack” in *Maintenance and Replacement Procedures* 323-1701-546.

If	Then
the alarm clears	the removed circuit pack has faults. You have completed this procedure.
the alarm remains	the circuit pack is not the problem. Reseat the original circuit pack. Contact your next level of support.

—end—

Procedure 15-10
OSC—Intrasite Communication Failure

Probable cause

This alarm becomes active when the intrasite fault sectionalization (IFS) feature is enabled and

- there is a problem with the 10Base–T 2X communications between shelves at this site
- an SP or OSC circuit pack at this site or on a shelf within this system has failed or is missing
- the shelf containing the OSC has been backed out but not yet restarted

Impact

Major, non-service-affecting.

Action

Step	Action
1	Use the System Manager to determine if SP–Intrasite Communication Failure alarms are raised on the shelves at this site.

If SP–Intrasite Communication Failure alarms	**Then**
are raised	follow Procedure 13-21 “SP—Intrasite Communication Failure”. Go to the next step.
are not raised	go to step 3

2	**If**	**Then**
	the alarm clears	you have completed this procedure
	the alarm remains	go to the next step

Note: The alarm can take up to 1 minute to clear after clearing the SP–Intrasite Communication Failure alarms.

—continued—

Procedure 15-10 (continued)
OSC—Intrasite Communication Failure

Step	Action
3	Use System Manager to determine if there is a Lost Contact (blue dot) on any of the shelves listed in the Selected Shelves drop-down list.

If	Then
there is a Lost Contact	see Table 1-2,“ Isolating faults that do not generate alarms” on page 1-7 and follow the actions for problem “Cannot communicate with SP/shelf”. Go to the next step.
otherwise	contact your next level of support

Step	If	Then
4	the alarm clears	you have completed this procedure
	the alarm remains	contact your next level of support

—end—

Procedure 15-11
OSC—Invalid Data

Probable cause

This alarm becomes active when the signal received at the WSC does not resemble the 100Fx format.

Impact

Minor, non-service-affecting.

This condition does not impact the WSC data.

Precautions

CAUTION
Risk of affecting network reliability
Make sure that all connectors are cleaned before you make the connections (or re-connections) described in this procedure. For cleaning information, see the chapter "Cleaning connectors" in *Installing Optical Metro 5200 Shelves and Components*, 323-1701-201.

Action

Step	Action
1	Use a fiber topology diagram to determine the OSC sites. Check the entry in the Port column on the Fault–Active Alarms window to determine where the alarm is raised.

If the entry is	**Then**
WSC-E	the alarm is raised on the east WSC port. Go to the next step.
WSC-W	the alarm is raised on the west WSC port. Go to the next step.

2	Make sure that the optical fiber is correctly connected at both ends and that there is no problem with the optical fiber plant between the OSC WSC port and the subtending equipment.

—continued—

Procedure 15-11 (continued)
OSC—Invalid Data

Step	Action
3	Use an optical power meter to measure the received power level at the Rx port of the affected OSC. Check if the Rx port power level is within the operational threshold. Write down the value. Refer to Table 2-54 in *Technical Specifications*, 323-1701-180 for the correct values.

4

If the Rx port power is	**Then** go to
within operational threshold	step step 8
otherwise	the next step

5 Make sure the transmitting subtending equipment is functioning correctly and transmitting a valid signal. If necessary, follow the appropriate troubleshooting procedures for the subtending equipment.

6

If	**Then**
the alarm clears	you have completed this procedure
the alarm remains	go to the next step

7 Use the proper cleaning kit to clean all the connectors between the subtending equipment Tx port and the OSC WSC Rx port. For information on cleaning, see "Cleaning connectors" in *Installing Optical Metro 5200 Shelves and Components,* 323-1701-201.

— Clean each connector separately.

— Record the operating power level after you clean each connector and compare it to the value you wrote down in step 3, this will allow you to see if there is any improvement to the Rx power.

If	**Then**
the alarm clears	you have completed this procedure
the alarm remains	go to the next step

8 Reseat the OSC circuit pack. Follow Procedure 3-68 "Reseating a circuit pack" in *Provisioning and Operating Procedures,* 323-1701-310.

If	**Then**
the alarm clears	you have completed the procedure
the alarm remains	go to the next step

—continued—

Procedure 15-11 (continued)
OSC—Invalid Data

Step	Action
9	Replace the OSC circuit pack. Follow Procedure 3-9 “Replacing an OSC circuit pack” in *Maintenance and Replacement Procedures,* 323-1701-546.

If	Then
the alarm clears	the removed circuit pack has faults. You have completed this procedure.
the alarm remains	the circuit pack is not the problem. Reseat the original circuit pack. Contact your next level of support.

—end—

Procedure 15-12
OSC—Invalid Provisioning

Probable cause

This alarm becomes active when:

- intrasite fault sectionalization (IFS) detects incorrect site provisioning for use with the IFS feature.For example, if Serial is selected as the Fibering Configuration for the site and IFS detects that the site contains OFAs or APBEs and the ring carries both C-band and L-band traffic
- two or more OSCs at the same site have the same OSID and all shelves at the site are connected together via the Ethernet-2 LAN

Impact

Major, non-service affecting.

Action

Step	Action
1	In System Manager, select the Equipment tab.
2	Select the Inventory tab.
3	**If** / **Then** go to
	one or more OSC exist on the site and has the same OSID and all OSCs are required — step 4
	one or more OSC exist on the site and has the same OSID and the OSCs are not required — step 6
	otherwise — step 10
4	Change the OSID on the OSC circuit packs. Each OSC should have a different OSID. Refer to the "Rules for provisioning OSIDs" and the associated Precautions in Procedure 3-36 "Provisioning the optical system identifier (OSID)" in *Provisioning and Operating Procedures*, 323-1701-310.
5	Go to step 12.
6	Delete the facilities associated with the OSC unneeded. Follow Procedure 3-14 "Deleting a circuit pack or SFP facility" in *Provisioning and Operating Procedures*, 323-1701-310.
7	Delete the unneeded OSC equipment. Follow Procedure 3-9 "Deleting a circuit pack or SFP from the inventory" in *Provisioning and Operating Procedures*, 323-1701-310.
8	Unseat the unneeded OSC circuit pack.
9	Go to step 12.

—continued—

Procedure 15-12 (continued)
OSC—Invalid Provisioning

Step	Action
10	Right-click on the OSC circuit pack, and select Modify. *The Optical Metro Inventory dialog box appears.*
11	Make sure that the OSC Fibering Configuration is correctly provisioned.

If the field is	**Then**
incorrectly provisioned	reprovision the field with the correct fibering configuration. Follow Procedure 3-37 "Provisioning the fibering topology and fibering configuration" in *Provisioning and Operating Procedures*, 323-1701-310.
correctly provisioned	make sure that the site is fibered correctly. Review the "Fault sectionalization" chapter in *Software and User Interface,* 323-1701-101, and fiber the site correctly, or disable IFS. See Note.

Note: When using IFS, "Parallel" must be selected for the Fibering Configuration at a site with OFAs or APBEs, and inbound C-band and L-band traffic. If C/L Splitter/Couplers are not deployed, then the site does not conform to the supported topologies of IFS.

12

If	**Then**
the alarm clears	you have completed this procedure
the alarm remains	contact your next level of support

—end—

Procedure 15-13
OSC—Invalid Signal, Remote Invalid Signal

Probable cause

This alarm becomes active when the signal received from the optical input signal has faults or is invalid. One of the following conditions exists:

- the receiver port on the OSC circuit pack is connected to the wrong subtending equipment
- the connector is dirty at the receiving OSC circuit pack or at the corresponding remote OSC circuit pack
- the receiving OSC circuit pack is defective
- the transmitting OSC circuit pack is defective

Impact

Major, non-service-affecting.

—continued—

Procedure 15-13 (continued)
OSC—Invalid Signal, Remote Invalid Signal

Precautions

CAUTION
Risk of affecting network reliability
Make sure that all connectors are cleaned before you make the connections (or re-connections) described in this procedure. For cleaning information, see the chapter "Cleaning connectors" in *Installing Optical Metro 5200 Shelves and Components*, 323-1701-201.

Action

Step	Action
1	Check the entry in the Port column on the Fault–Active Alarms window to determine where the alarm is raised.

If the entry is	**Then**
OSC-E	the alarm is raised on the east OSC port. Go to the next step.
OSC-W	the alarm is raised on the west OSC port. Go to the next step.

2 Check alarms to make sure the corresponding upstream OSC circuit pack has not failed or is missing. Use a fiber topology diagram to determine the remote OSC sites.

Note: If the alarm is OSC East, check the east OSC port at the local site and the west OSC port at the remote site and visa-versa for an OSC West alarm. Use a network topology diagram to determine the local and remote sites

3

If	**Then**
there is an alarm at the upstream OSC circuit pack	clear the alarm, and go to the next step
there is no alarm at the upstream OSC circuit pack	go to the next step

4

If	**Then**
the alarm clears	you have completed this procedure
the alarm remains	go to the next step

—continued—

Procedure 15-13 (continued)
OSC—Invalid Signal, Remote Invalid Signal

Step	Action
5	Make sure the OSC optical fiber is connected correctly at both ends. At the local site, check the connection between the OSC Rx/Tx ports and the OSC tray. At the remote site, check the connection between the OSC Rx/Tx ports and the OSC tray.

If	Then
the fibering is incorrect	disconnect the fibers and connect them correctly. Go to the next step.
the fibering is correct	go to step 7

Note: For information on correct OSC fibering, see Procedure 3-14, Procedure 3-15, Procedure 3-16, or Procedure 3-17 in *Connection Procedures*, 323-1701-221.

6

If	Then
the alarm clears	you have completed this procedure
the alarm remains	go to the next step

7 Using a power meter, check to see if the optical power at the Rx port of the alarming local OSC circuit pack is within the operational threshold. Write down the Rx power. Refer to Table 2-54 in *Technical Specifications,* 323-1701-180 for the OSC Rx operational threshold.

If the received power	**Then** go to
is within the operational threshold	step 11
is not within the operational threshold	the next step

8 Using a power meter, make sure that the transmitted power level of the corresponding remote OSC port is within the operational threshold. Refer to Table 2-54 in *Technical Specifications,* 323-1701-180 for the OSC Tx operational threshold.

If the transmitted power	**Then** go to
is within the operational threshold	step 11
is not within the operational threshold	the next step

—continued—

Procedure 15-13 (continued)
OSC—Invalid Signal, Remote Invalid Signal

Step	Action

9 Use the proper cleaning kit to clean the connectors between the OSC and the OSC tray. Specifically, clean those fibers attached to the local OSC Rx port and to the Tx Port on the remote OSC. For information on cleaning, see "Cleaning connectors" in *Installing Optical Metro 5200 Shelves and Components,* 323-1701-201.

— Clean each connector separately.

— Record the operating power level after you clean each connector and compare it to the value you wrote down, this will allow you to see if there is any improvement to the power levels.

CAUTION
Risk of loss of traffic across multiple bands
Do not clean any optical fibers on the optical fiber plant, or on connections to the OMX. This affects traffic over multiple bands. Clean only the fibers between the OSC circuit pack and the OSC tray.

If	Then
the alarm clears	you have completed the procedure
the alarm remains	go to the next step

10 Using a power meter, verify again that the transmitted power level of the corresponding remote OSC port is within the operational threshold. Refer to Table 2-54 in *Technical Specifications,* 323-1701-180 for the OSC Tx operational threshold.

If the transmitted power	**Then**
is within the operational threshold and the alarm clears	you have completed the procedure
is not within the operational threshold	go to the next step

11 Reseat the OSC circuit pack raising the Invalid Signal alarm. Follow Procedure 3-68 "Reseating a circuit pack" in *Provisioning and Operating Procedures,* 323-1701-310.

If	Then
the alarm clears	you have completed this procedure
the alarm remains	go to the next step

—continued—

Procedure 15-13 (continued)
OSC—Invalid Signal, Remote Invalid Signal

Step	Action
12	Replace the OSC circuit pack raising the Invalid Signal alarm. Follow Procedure 3-9 "Replacing an OSC circuit pack" in *Maintenance and Replacement Procedures,* 323-1701-546.

If	Then
the alarm clears	the removed circuit pack has faults. You have completed this procedure.
the alarm remains	the circuit pack is not the problem. Reseat the original circuit pack. Go to the next step.

Step	Action
13	Reseat the corresponding remote OSC circuit pack. Follow Procedure 3-68 "Reseating a circuit pack" in *Provisioning and Operating Procedures,* 323-1701-310.

If	Then
the alarm clears	you have completed the procedure
the alarm remains	go to the next step

Step	Action
14	Replace the corresponding remote OSC circuit pack. Follow Procedure 3-9 "Replacing an OSC circuit pack" in *Maintenance and Replacement Procedures,* 323-1701-546.

If	Then
the alarm clears	the removed circuit pack has faults. You have completed this procedure.
the alarm remains	the circuit pack is not the problem. Reseat the original circuit pack. Contact your next level of support.

—end—

Procedure 15-14
OSC—Loss of Frame, Remote Loss of Frame

Probable cause

This alarm becomes active when the aggregate frame pattern is not detected in the OSC signal. This alarm may be caused by improper fiber connections or by a poor signal-to-noise ratio in the optical channel.

Impact

Major, non-service-affecting.

Precautions

CAUTION
Risk of affecting network reliability
Make sure that all connectors are cleaned before you make the connections (or re-connections) described in this procedure. For cleaning information, see the chapter "Cleaning connectors" in *Installing Optical Metro 5200 Shelves and Components*, 323-1701-201.

—continued—

Procedure 15-14 (continued)
OSC—Loss of Frame, Remote Loss of Frame

Action

Step	Action

1 Check the entry in the Port column on the Fault–Active Alarms window to determine where the alarm is raised.

If the entry is	**Then**
OSC-E	the alarm is raised on the east OSC port. Go to the next step.
OSC-W	the alarm is raised on the west OSC port. Go to the next step.

2 Check alarms to make sure the corresponding upstream OSC circuit pack has not failed or is missing. Use a fiber topology diagram to determine the remote OSC sites.

Note: If the alarm is OSC East, check the east OSC port at the local site and the west OSC port at the remote site and visa-versa for an OSC West alarm. Use a network topology diagram to determine the local and remote sites

3

If	**Then**
there is an alarm at the upstream OSC circuit pack	clear the alarm, and go to the next step
there is no alarm at the upstream OSC circuit pack	go to the next step

4 Make sure the OSC optical fiber is connected correctly at both ends. At the local site, check the connection between the OSC Rx/Tx ports and the OSC tray. At the remote site, check the connection between the OSC Rx/Tx ports and the OSC tray.

If	**Then**
the fibering is incorrect	disconnect the fibers and connect them correctly. Go to the next step.
the fibering is correct	go to step 6

Note: For information on correct OSC fibering, see Procedure 3-14, Procedure 3-15, Procedure 3-16, or Procedure 3-17 in *Connection Procedures*, 323-1701-221.

5

If	**Then**
the alarm clears	you have completed this procedure
the alarm remains	go to the next step

—continued—

Procedure 15-14 (continued)
OSC—Loss of Frame, Remote Loss of Frame

Step	Action
6	Using a power meter, check to see if the optical power at the Rx port of the alarming local OSC circuit pack is within the operational threshold. Write down the Rx power. Refer to Table 2-54 in *Technical Specifications,* 323-1701-180 for the OSC Rx operational threshold.

If the received power	**Then** go to
is within the operational threshold	step 10
is not within the operational threshold	the next step

Step	Action
7	Using a power meter, make sure that the transmitted power level of the corresponding remote OSC port is within the operational threshold. Refer to Table 2-54 in *Technical Specifications,* 323-1701-180 for the OSC Tx operational threshold.

If the transmitted power	**Then** go to
is within the operational threshold	step 10
is not within the operational threshold	the next step

8 Use the proper cleaning kit to clean the connectors between the OSC and the OSC tray. Specifically, clean those fibers attached to the local OSC Rx port and to the Tx Port on the remote OSC. For information on cleaning, see "Cleaning connectors" in *Installing Optical Metro 5200 Shelves and Components,* 323-1701-201.

— Clean each connector separately.

— Record the operating power level after you clean each connector and compare it to the value you wrote down, this will allow you to see if there is any improvement to the power levels.

CAUTION
Risk of loss of traffic across multiple bands
Do not clean any optical fibers on the optical fiber plant, or on connections to the OMX. This affects traffic over multiple bands. Clean only the fibers between the OSC circuit pack and the OSC tray.

If	**Then**
the alarm clears	you have completed the procedure
the alarm remains	go to the next step

—continued—

Procedure 15-14 (continued)
OSC—Loss of Frame, Remote Loss of Frame

Step	Action
9	Using a power meter, verify again that the transmitted power level of the corresponding remote OSC port is within the operational threshold. Refer to Table 2-54 in *Technical Specifications,* 323-1701-180 for the OSC Tx operational threshold.

If the transmitted power	**Then**
is within the operational threshold and the alarm clears	you have completed the procedure
is not within the operational threshold	go to the next step

Step	Action
10	Reseat the OSC circuit pack raising the Loss of Frame alarm. Follow Procedure 3-68 “Reseating a circuit pack” in *Provisioning and Operating Procedures,* 323-1701-310.

If	**Then**
the alarm clears	you have completed this procedure
the alarm remains	go to the next step

Step	Action
11	Replace the OSC circuit pack raising the Loss of Frame alarm. Follow Procedure 3-9 “Replacing an OSC circuit pack” in *Maintenance and Replacement Procedures,* 323-1701-546.

If	**Then**
the alarm clears	the removed circuit pack has faults. You have completed this procedure.
the alarm remains	the circuit pack is not the problem. Reseat the original circuit pack. Go to the next step.

Step	Action
12	Reseat the OSC circuit pack raising the Remote Loss of Frame alarm. Follow Procedure 3-68 “Reseating a circuit pack” in *Provisioning and Operating Procedures,* 323-1701-310.

If	**Then**
the alarm clears	you have completed the procedure
the alarm remains	go to the next step

—continued—

Procedure 15-14 (continued)
OSC—Loss of Frame, Remote Loss of Frame

Step	Action
13	Replace the OSC circuit pack raising the Remote Loss of Frame alarm. Follow Procedure 3-9 “Replacing an OSC circuit pack” in *Maintenance and Replacement Procedures,* 323-1701-546.

If	Then
the alarm clears	the removed circuit pack has faults. You have completed this procedure.
the alarm remains	the circuit pack is not the problem. Reseat the original circuit pack. Contact your next level of support.

—end—

Procedure 15-15
OSC—Loss of Link

Probable cause

This alarm becomes active when there is no signal at the WSC input.

Impact

Minor, non-service-affecting.

Precautions

CAUTION
Risk of affecting network reliability
Make sure that all connectors are cleaned before you make the connections (or re-connections) described in this procedure. For cleaning information, see the chapter "Cleaning connectors" in *Installing Optical Metro 5200 Shelves and Components*, 323-1701-201.

Action

Step	Action
1	Use a fiber topology diagram to determine the OSC sites. Check the entry in the Port column on the Fault–Active Alarms window to determine where the alarm is raised.

If the entry is	**Then**
WSC-E	the alarm is raised on the east WSC port. Go to the next step.
WSC-W	the alarm is raised on the west WSC port. Go to the next step.

2	Make sure the optical fiber is correctly connected at both ends and that there is no problem with the optical fiber plant between the OSC WSC port and the subtending equipment.
3	Use an optical power meter to measure the received power level at the Rx port of the affected OSC. Check if the Rx port power level is within the operational threshold. Write down the value. Refer to Table 2-54 in *Technical Specifications*, 323-1701-180 for the correct values.

—continued—

Procedure 15-15 (continued)
OSC—Loss of Link

Step	Action

4 **If** the Rx port power is **Then** go to

within operational threshold	step 8
otherwise	the next step

5 Make sure the transmitting subtending equipment is functioning correctly and transmitting a valid signal. If necessary, follow the appropriate troubleshooting procedures for the subtending equipment.

6

If	Then
the alarm clears	you have completed this procedure
the alarm remains	go to the next step

7 Use the proper cleaning kit to clean all the connectors between the subtending equipment Tx port and the OSC WSC Rx port. For information on cleaning, see "Cleaning connectors" in *Installing Optical Metro 5200 Shelves and Components,* 323-1701-201.

— Clean each connector separately.

— Record the operating power level after you clean each connector and compare it to the value you wrote down in step 3, this will allow you to see if there is any improvement to the Rx power.

If	Then
the alarm clears	you have completed this procedure
the alarm remains	go to the next step

8 Reseat the OSC circuit pack. Follow Procedure 3-68 "Reseating a circuit pack" in *Provisioning and Operating Procedures,* 323-1701-310.

If	Then
the alarm clears	you have completed the procedure
the alarm remains	go to the next step

9 Replace the OSC circuit pack. Follow Procedure 3-9 "Replacing an OSC circuit pack" in *Maintenance and Replacement Procedures,* 323-1701-546.

If	Then
the alarm clears	the removed circuit pack has faults. You have completed this procedure.
the alarm remains	the circuit pack is not the problem. Reseat the original circuit pack. Contact your next level of support.

—end—

Procedure 15-16
OSC—Loss of Signal, Remote Loss of Signal

Probable cause

This alarm becomes active when the OSC circuit pack is not detecting an input signal. One of the following conditions exists:

- the receiving optical fiber connections have degraded
- an optical fiber is cut
- the optical fiber is bent or coiled too tightly
- the received optical power is below the accepted threshold
- the connector is dirty at the receiving OSC circuit pack or at the corresponding upstream circuit pack
- an optical patch cord is damaged
- the receiving OSC circuit pack is defective
- the transmitting OSC circuit pack is defective or missing

Impact

Major, non-service-affecting.

Precautions

CAUTION
Risk of affecting network reliability
Make sure that all connectors are cleaned before you make the connections (or re-connections) described in this procedure. For cleaning information, see the chapter "Cleaning connectors" in *Installing Optical Metro 5200 Shelves and Components*, 323-1701-201.

—continued—

Procedure 15-16 (continued)
OSC—Loss of Signal, Remote Loss of Signal

Action

Step	Action
1	Check the entry in the Port column on the Fault–Active Alarms window to determine where the alarm is raised.

If the entry is	**Then**
OSC-E	the alarm is raised on the east OSC port. You require this information in step 2. Go to the next step.
OSC-W	the alarm is raised on the west OSC port. You require this information in step 2. Go to the next step.

2 Check alarms to make sure the corresponding upstream OSC circuit pack has not failed or is missing. Use a fiber topology diagram to determine the remote OSC sites.

If at step 1, you determined that the alarm was raised on	**Then**
OSC-E	check the east OSC port at the local site and the west OSC port at the remote site.
OSC-W	check the west OSC port at the local site and the east OSC port at the remote sit

Note: Use a network topology diagram to determine the local and remote sites

3

If	**Then**
there is an alarm at the upstream OSC circuit pack	clear the alarm. Go to the next step.
there is no alarm at the upstream OSC circuit pack	go to the next step

—continued—

Procedure 15-16 (continued)
OSC—Loss of Signal, Remote Loss of Signal

Step	Action

4

If	Then
the alarm clears	you have completed this procedure
the alarm remains	go to the next step

5 Make sure the OSC optical fiber is connected correctly at both ends. At the local site, check the connection between the OSC Rx/Tx ports and the OSC tray. At the remote site, check the connection between the OSC Rx/Tx ports and the OSC tray.

If	Then
the fibering is incorrect	disconnect the fibers and connect them correctly. Go to the next step.
the fibering is correct	go to step 7

Note: For information on correct OSC fibering, see Procedure 3-14, Procedure 3-15, Procedure 3-16, or Procedure 3-17 in *Connection Procedures*, 323-1701-221.

6

If	Then
the alarm clears	you have completed this procedure
the alarm remains	go to the next step

7 Using a power meter, check to see if the optical power at the Rx port of the alarming local OSC circuit pack is within the operational threshold. Write down the Rx power. Refer to Table 2-54 in *Technical Specifications,* 323-1701-180 for the OSC Rx operational threshold.

If the received power	**Then** go to
is within the operational threshold	step 11
is not within the operational threshold	the next step.

8 Using a power meter, make sure that the transmitted power level of the corresponding remote OSC port is within the operational threshold. Refer to Table 2-54 in *Technical Specifications,* 323-1701-180 for the OSC Tx operational threshold.

If the transmitted power	**Then** go to
is within the operational threshold	step 11
is not within the operational threshold	the next step

—continued—

Procedure 15-16 (continued)
OSC—Loss of Signal, Remote Loss of Signal

Step	Action
9	Use the proper cleaning kit to clean the connectors between the OSC and the OSC tray. Specifically, clean those fibers attached to the local OSC Rx port and to the Tx Port on the remote OSC. For information on cleaning, see "Cleaning connectors" in *Installing Optical Metro 5200 Shelves and Components,* 323-1701-201. — Clean each connector separately. — Record the operating power level after you clean each connector and compare it to the value you wrote down, this will allow you to see if there is any improvement to the power levels. **CAUTION** **Risk of loss of traffic across multiple bands** Do not clean any optical fibers on the optical fiber plant, or on connections to the OMX. This affects traffic over multiple bands. Clean only the fibers between the OSC circuit pack and the OSC tray. **If** — **Then** the alarm clears — you have completed the procedure the alarm remains — go to the next step
10	Using a power meter, verify again that the transmitted power level of the corresponding remote OSC port is within the operational threshold. Refer to Table 2-54 in *Technical Specifications,* 323-1701-180 for the OSC Tx operational threshold. **If** the transmitted power — **Then** is within the operational threshold and the alarm clears — you have completed this procedure is not within the operational threshold — go to the next step

—continued—

Procedure 15-16 (continued)
OSC—Loss of Signal, Remote Loss of Signal

Step	Action
11	Reseat the OSC circuit pack raising the Loss of Signal alarm. Follow Procedure 3-68 "Reseating a circuit pack" in *Provisioning and Operating Procedures,* 323-1701-310.

If	Then
the alarm clears	you have completed this procedure
the alarm remains	go to the next step

12 Replace the OSC circuit pack raising the Loss of Signal alarm. Follow Procedure 3-9 "Replacing an OSC circuit pack" in *Maintenance and Replacement Procedures,* 323-1701-546.

If	Then
the alarm clears	the removed circuit pack has faults. You have completed this procedure.
the alarm remains	the circuit pack is not the problem. Reseat the original circuit pack. Go to the next step.

13 Reseat the OSC circuit pack raising the Remote Loss of Signal alarm. Follow Procedure 3-68 "Reseating a circuit pack" in *Provisioning and Operating Procedures,* 323-1701-310.

If	Then
the alarm clears	you have completed the procedure
the alarm remains	go to the next step

14 Replace the OSC circuit pack raising the Remote Loss of Signal alarm. Follow Procedure 3-9 "Replacing an OSC circuit pack" in *Maintenance and Replacement Procedures,* 323-1701-546.

If	Then
the alarm clears	the removed circuit pack has faults. You have completed this procedure.
the alarm remains	the circuit pack is not the problem. Reseat the original circuit pack. Contact your next level of support.

—end—

Procedure 15-17
OSC S/C—Optical Signal Failure (Rx) or (Tx)

An Optical Signal Failure alarm is raised against the equipment at both ends of the suspect fiber span. The beginning of the suspect span is identified by an Optical Signal Failure Tx alarm, while the end of the suspect span is identified by a corresponding Optical Signal Failure Rx alarm.

Depending on the network and site topology, several Optical Signal Failure alarms are possible. The IFS feature raises Optical Signal Failure alarms at all the sites where a broken fiber would cause the observed service failures.

Probable cause

This alarm becomes active when the IFS feature identifies a failed WDM fiber at an OSC tray (OSC S/C). This alarm indicates that there is a failed fiber between this OSC tray and a connected component to the east or to the west. The alarm is raised against the Thru (Rx or Tx) port of the east or west OSC tray.

Impact

Critical, service-affecting.

Requirements

If an Intrasite Communication Failure alarm is active anywhere in the ring, clear this alarm before performing this procedure. Follow Procedure 15-10 "OSC—Intrasite Communication Failure" or Procedure 13-21 "SP—Intrasite Communication Failure".

After clearing the Intrasite Communication Failure alarm, the IFS alarms may change. Follow the appropriate procedure for the identified broken fibers.

Perform the following steps at each site where an Optical Signal Failure alarm is raised until all Optical Signal Failure alarms are cleared.

Precautions

CAUTION
Risk of affecting network reliability
Make sure that all connectors are cleaned before you make the connections (or re-connections) described in this procedure. For cleaning information, see the chapter "Cleaning connectors" in *Installing Optical Metro 5200 Shelves and Components*, 323-1701-201.

—continued—

Procedure 15-17 (continued)
OSC S/C—Optical Signal Failure (Rx) or (Tx)

Action

Step	Action
1	In the Active Alarms window, determine if the OSC—Intrasite Communication Failure or SP—Intrasite Communication Failure alarm is present on the network.

If this alarm is	**Then** go to
present on the network	step 2
not present on the network	step 4

2 Clear the Intrasite Communication Failure alarm. Follow "OSC—Intrasite Communication Failure" on page 15-25 or "SP—Intrasite Communication Failure" on page 13-41.

Note: It takes a minimum of 10 seconds for the alarms to clear.

If the Intrasite Communication Failure alarm	**Then**
clears	go to the next step
does not clear	contact your next level of support

3 Clearing the Intrasite Communication Failure alarm can change the Optical Signal Failure alarms.

If clearing the Intrasite Communication alarm	**Then**
cleared all the optical signal failure alarms in the system	you have completed this procedure
otherwise	go to the next step

4 Make sure that both ends of the optical fiber are physically connected to the equipment. Refer to the appropriate procedures in Chapter 3, "Connecting components" in *Connection Procedures*, 323-1701-221.

5 Disconnect the fiber at the Tx equipment and use an optical power meter and a patch cord to measure the optical power coming from the equipment.

Refer to tables in *Technical Specifications,* 323-1701-180, for the operational power levels that are acceptable for the type of equipment being measured.

6

If the optical power	**Then** go to
is above the operational threshold	the next step
is below the operational threshold	step 9

—continued—

Procedure 15-17 (continued)
OSC S/C—Optical Signal Failure (Rx) or (Tx)

Step	Action
7	Disconnect the fiber at the Rx equipment and use an optical power meter to measure the optical power coming from the Tx equipment. Refer to tables in *Technical Specifications,* 323-1701-180, for the operational power levels that are acceptable for the type of equipment being measured.
8	**If** the optical power — **Then** go to is above the operational threshold — step 12 is below the operational threshold — step 15
9	Use the proper cleaning kit to clean the connectors. For information on cleaning, see "Cleaning connectors" in *Installing Optical Metro 5200 Shelves and Components,* 323-1701-201. — Clean each connector. — Record the operating power level after you clean each connector and compare it to the value you wrote down, this will allow you to see if there is any improvement to the power levels.
10	Reconnect the fiber that was disconnected in step 5. Go to the next step.
11	**If** — **Then** the alarm clears — you have completed this procedure the alarm remains — go to step 20
12	Use the proper cleaning kit to clean the connectors. For information on cleaning, see "Cleaning connectors" in *Installing Optical Metro 5200 Shelves and Components,* 323-1701-201. — Clean each connector. — Record the operating power level after you clean each connector and compare it to the value you wrote down, this will allow you to see if there is any improvement to the power levels.
13	Reconnect the fiber that was disconnected in step 7. Go to the next step.
14	**If** — **Then** the alarm clears — you have completed this procedure the alarm remains — go to step 18
15	Replace the fiber. Clean the new fiber and the optical connectors on the equipment. For information on cleaning, see "Cleaning connectors" in *Installing Optical Metro 5200 Shelves and Components,* 323-1701-201. ***Note:*** It will take at least 10 seconds for the alarms to clear after the problem is resolved.

—continued—

Procedure 15-17 (continued)
OSC S/C—Optical Signal Failure (Rx) or (Tx)

Step	Action	
16	**If**	**Then**
	the alarm clears	you have completed this procedure
	the alarm remains	clean all the optical connectors for the Tx and Rx equipment again. Go to the next step. For information on cleaning, see "Cleaning connectors" in *Installing Optical Metro 5200 Shelves and Components,* 323-1701-201.
17	**If**	**Then**
	the alarm clears	you have completed this procedure
	the alarm remains	go to the next step
18	Check for an optical signal failure at a downstream site. Go to the next step.	
19	**If** at a downstream site	**Then**
	there is an optical signal failure	repeat this procedure, beginning with step 4, at that site
	otherwise	go to step 20
20	Check for an optical signal failure at an upstream site. Go to the next step.	
21	**If** at an upstream site	**Then**
	there is an optical signal failure	repeat this procedure, beginning with step 4, at that site
	otherwise	contact your next level of support
		—end—

Procedure 15-18
OSC—Optical System Identifier Mismatch

Probable cause

This alarm becomes active when the OSC at one site has a different optical system identifier (OSID) from the OSCs at adjacent sites in the same ring.

Impact

Minor, non-service-affecting.

Precautions

CAUTION
Risk of interfering with alarm reporting
It is essential that the OSID for all line-facing equipment is provisioned correctly for bridge sites, for hub and spoke rings, and for rings with intrasite fault sectionalization (IFS). Refer to the "Rules for provisioning OSIDs" in *Provisioning and Operating Procedures*, 323-1701-310.

Know the network topology and exercise caution when provisioning OSIDs. Incorrect OSID provisioning can generate unnecessary Incomplete Provisioning alarms.

Action

Step	Action
1	Refer to the "Rules for provisioning OSIDs" and the associated Precautions in Procedure 3-36 "Provisioning the optical system identifier (OSID)" in *Provisioning and Operating Procedures*, 323-1701-310.
2	Provision the correct OSID for the OSC circuit pack. Assign an OSID that matches the other equipment in the same ring. An OSC has to have the same OSID as the OSC on the East and West neighboor.Follow Procedure 3-36 "Provisioning the optical system identifier (OSID)" in *Provisioning and Operating Procedures*, 323-1701-310.

—end—

Procedure 15-19
OSC S/C—Optical Tray Mismatch

Probable cause

The Optical Tray Mismatch alarm becomes active when one of the two following conditions is met:

- the type of OSC splitter/coupler is different from the type of OSC splitter/coupler that is provisioned
- a component other than an OSC splitter/coupler is connected to a port on the maintenance panel or equipment inventory unit that is provisioned for an OSC splitter/coupler

Impact

Minor, non-service-affecting.

Precautions

CAUTION
Risk of affecting network reliability
Make sure that all connectors are cleaned before you make the connections (or re-connections) described in this procedure. For cleaning information, see the chapter "Cleaning connectors" in *Installing Optical Metro 5200 Shelves and Components*, 323-1701-201.

Requirements

You must be logged into the System Manager to perform this procedure. To log into the network, see Procedure 1-1, "Logging into the network" in *Provisioning and Operating Procedures*, 323-1701-310. To view alarms, click on the Fault tab and then click on the Active Alarms tab.

—continued—

Procedure 15-19 (continued)
OSC S/C—Optical Tray Mismatch

Action

Step	Action
1	Make sure the component connected to the port on the maintenance panel or the EIU is an OSC splitter/coupler.

If	**Then** go to
the connected component is an OSC splitter/coupler and is suppose to be an OSC splitter/coupler	step 4
the connected component is not an OSC splitter/coupler and is suppose to be an OSC splitter/coupler	the next step

2 Remove the component connected to the port that is provisioned for an OSC splitter/coupler.

3 Wait one minute and connect the OSC splitter/coupler to the port on the maintenance panel or EIU.

If	**Then**
the alarm clears	you have completed this procedure
the alarm remains	go to the next step

4 Put the OSC splitter/coupler out of service. In the System Manager Equipment-Inventory screen, right-click on the OSC splitter/coupler and choose the “Modify” option from the pop-up menu.

5 In the State area of the Optical Metro Inventory dialog box, select OOS from the Administrative drop-down list.

6 Click **OK** to close the dialog box.

The Confirm Inventory OOS dialog box appears.

7 Click **Yes** to confirm the change.

—continued—

Procedure 15-19 (continued)
OSC S/C—Optical Tray Mismatch

Step	Action
8	In the System Manager Equipment-Inventory screen, right-click on the OSC splitter/coupler you just took OOS, and choose the “Delete” option from the pop-up menu. *A confirmation window appears. Click “Yes”.*
9	Manually provision the OSC splitter/coupler. Follow Procedure 3-29 “Manually provisioning an OSC splitter/coupler” in *Provisioning and Operating Procedures*, 323-1701-310.

If	Then
the alarm clears	you have completed the procedure
the alarm remains	go to the next step

Step	Action
10	Replace the OSC splitter/coupler. Follow in *Maintenance and Replacement Procedures*, 323-1701-546.

If	Then
the alarm clears	the removed OSC splitter/coupler has faults. You have completed this procedure.
the alarm remains	the OSC splitter/coupler is not the problem. Replace the original OSC splitter/coupler. Contact your next level of support.

—end—

Procedure 15-20
OSC S/C—Optical Tray Missing

Probable cause

This alarm becomes active when one of the following conditions occurs:

- the OSC splitter/coupler is not present in the shelf but it is provisioned in the slot
- the OSC splitter/coupler cable is not connected to the port in the maintenance panel
- the OSC splitter/coupler cable is not connected to the port in the equipment inventory unit (EIU)

Impact

Minor, non-service-affecting.

Precautions

CAUTION
Risk of affecting network reliability
Make sure that all connectors are cleaned before you make the connections (or re-connections) described in this procedure. For cleaning information, see the chapter "Cleaning connectors" in *Installing Optical Metro 5200 Shelves and Components*, 323-1701-201.

Requirements

You must be logged into the System Manager to perform this procedure. To log into the network, see Procedure 1-1, "Logging into the network" in *Provisioning and Operating Procedures*, 323-1701-310. To view alarms, click on the Fault tab and then click on the Active Alarms tab.

—continued—

Procedure 15-20 (continued)
OSC S/C—Optical Tray Missing

Action

Step	Action	
1	Make sure the cable connecting the OSC splitter/coupler to the maintenance panel or the EIU is installed in the correct port and is connected properly. Check for loose connections.	
2	**If**	**Then**
	the alarm clears	you have completed this procedure
	the alarm remains	go to the next step
3	Disconnect the cable from the maintenance panel or EIU and the OSC splitter/coupler, wait one minute, and then reconnect the cable.	
4	**If**	**Then**
	the alarm clears	you have completed this procedure
	the alarm remains	go to the next step
5	Replace the OSC splitter/coupler cable.	
6	**If**	**Then**
	the alarm clears	you have completed this procedure
	the alarm remains	go to the next step
7	Replace the OSC splitter/coupler. Refer to the procedures on replacing OSC splitter/coupler modules in *Maintenance and Replacement Procedures*, 323-1701-546.	
8	**If**	**Then**
	the alarm clears	you have completed this procedure
	the alarm remains	contact your next level of support
		—end—

Procedure 15-21
OSC—Remote Fault Sectionalization Not Responding

Probable cause

This alarm becomes active when the OSC circuit pack is not receiving intrasite fault sectionalization (IFS) information from the OSC circuit pack at an adjacent site. One of the following conditions may exist.

- IFS is not enabled at the adjacent site.
- The OSC circuit pack at the adjacent site is missing, or has failed.
- There is a broken DWDM fiber between the adjacent site and this site.
- There is a broken fiber between the OSC tray and the OSC circuit pack at this site, or the adjacent site

To ensure the correct operation of the IFS feature, IFS must be enabled at all the sites in the ring.

Impact

Major, non-service-affecting.

Precautions

CAUTION
Risk of affecting network reliability
Make sure that all connectors are cleaned before you make the connections (or re-connections) described in this procedure. For cleaning information, see the chapter "Cleaning connectors" in *Installing Optical Metro 5200 Shelves and Components*, 323-1701-201.

—continued—

Procedure 15-21 (continued)
OSC—Remote Fault Sectionalization Not Responding

Action

Step	Action
1	Make sure that the OSC circuit pack at the adjacent site is seated and operating.

If the adjacent OSC	**Then**
is missing	insert and seat an OSC circuit pack in the shelf. Follow Procedure 7-1 “Inserting circuit packs” in *Installing Optical Metro 5200 Shelves and Components* 323-1701-201 OR Procedure 7-1 “Inserting circuit packs in an Optical Metro 5100 shelf” in *Installing Optical Metro 5100 Shelves and Components* 323-1701-210. Go to the next step.
has failed	replace the OSC. Follow Procedure 3-9 “Replacing an OSC circuit pack” in *Maintenance and Replacement Procedures,* 323-1701-546. Go to the next step.
is reporting a Loss of Signal or Remote Loss of Signal alarm	follow Procedure 15-16 “OSC—Loss of Signal, Remote Loss of Signal” to clear the alarm. Go to the next step.

2

If	**Then**
the alarm clears	you have completed this procedure
the alarm remains	go to the next step

3 If IFS is to be used in this system, make sure that the IFS feature is enabled at the at the adjacent site. Follow Procedure 3-38 “Enabling intrasite fault sectionalization (IFS)” in *Provisioning and Operating Procedures*, 323-1701-310.

4

If	**Then**
the alarm clears	you have completed this procedure
the alarm remains	go to the next step

—continued—

Procedure 15-21 (continued)
OSC—Remote Fault Sectionalization Not Responding

Step	Action
5	If the remote site is the endpoint in a linear OADM configuration, use the System Manager to take the non-operating facility (East or West) of the OSC circuit pack at the end site out of service. Follow Procedure 3-13 "Taking a circuit pack facility or SFP facility out-of-service" in *Provisioning and Operating Procedures*, 323-1701-310.

6

If	Then
the alarm clears	you have completed this procedure
the alarm remains	go to the next step

7 There may be an intersite WDM fiber failure (a broken fiber between this site and the remote site).

If	Then
there is an intersite WDM fiber failure	Follow Procedure 15-22 "OSC—Shelf Input Failure" or Procedure 15-23 "OSC—Site Input Failure" to clear the alarm.
otherwise	contact your next level of support

8

If	Then
the alarm clears	you have completed this procedure
the alarm remains	contact your next level of support

—end—

Procedure 15-22
OSC—Shelf Input Failure

This alarm indicates that there may be a broken WDM fiber between this site and the adjacent site to the east or west. The alarm is raised against either the east OSC facility or the west OSC facility.

If the intrasite fault sectionalization (IFS) feature is enabled, a Site Input Failure alarm might be raised instead of a Shelf Input Failure alarm. A Site Input Failure alarm is more accurate in isolating the intersite fiber as the root cause.

Probable cause

For an OADM/Terminal site

This alarm becomes active on an OSC facility when the following occurs on the shelf with the OSC:

- there is an OSC–Loss of Signal on an OSC facility and all devices with the same optical system identifier (OSID) as the OSC are reporting Band Input Failure (BIF) or Loss of Signal (LOS) alarms.

  Note: At an OADM/Terminal site, the OSC circuit pack should be located in an OADM/Terminal shelf and not in an OFA shelf.

For an OFA site

This alarm becomes active when the OFA shelf has an OSC circuit pack and the following occurs:

- an OSC–Loss of Signal on an OSC facility and all the OFAs and APBEs in the same direction are reporting a Loss of Signal alarm.

Impact

Critical, service-affecting.

—continued—

Procedure 15-22 (continued)
OSC—Shelf Input Failure

Precautions

CAUTION
Risk of affecting network reliability
Make sure that all connectors are cleaned before you make the connections (or re-connections) described in this procedure. For cleaning information, see the chapter "Cleaning connectors" in *Installing Optical Metro 5200 Shelves and Components*, 323-1701-201.

Action

Step	Action
1	Use a fiber topology diagram to determine if the site with the active "Shelf Input Failure" alarm is at an OADM/Terminal or OFA site.

2

If the site is an	**Then** go to
OADM/Terminal site	step 3
OFA site	step 5

For an OADM/Terminal site

3 Use System Manager to check that

- all channels in all bands entering this site in the direction of the Shelf Input Failure are reporting Band Input Failure (BIF), Band Alarm Indication Signal, or OCLD/OTR/MOTR Loss of Signal at the first shelf that they are dropped (at this site or at downstream sites)
- all pre-APBEs and pre-OFAs at this site in the direction of the Shelf Input Failure are reporting Loss of Signal (LOS) or Band Alarm Indication Signal

4

If	**Then**
all pre-APBEs, pre-OFAs, and bands entering the site are failed	an inter-site fiber is broken. Go to step 7.
otherwise	there are broken fibers at this site. Go to step 9.

—continued—

Procedure 15-22 (continued)
OSC—Shelf Input Failure

	Step	Action

For an OFA site

5 Use System Manager to check that

- all thru-OFAs and thru-APBEs or all thru-2OFAs and thru-2 APBEs at this site in the direction of the Shelf Input Failure are reporting Loss of Signal (LOS) or Band Alarm Indication Signal
- all channels in all bands entering this site in the direction of the Shelf Input Failure are reporting Band Input Failure (BIF), Band Alarm Indication Signal, or OCLD/OTR/MOTR Loss of Signal (LOS) at the first shelf that they are dropped (at a downstream site)

6

If	Then
all Thru-OFAs and Thru- APBEs or all Thru-2 OFAs and Thru-2 APBEs are reporting a LOS or Band AIS at this site and all the bands entering this site have failed at downstream sites	an inter-site fiber is broken. Go to step 7.
otherwise	there are broken fibers at this site. Go to step 9.

7 Take the appropriate action to repair the outside fiber plant. Go to the next step.

8

If	Then
the alarm clears	you have completed this procedure
the alarm remains	contact your next level of support

9 If the problem is in the fiber connections within this site, then take the following actions:

a. make sure that the OSC trays are connected correctly to the east and west ports on the OSC circuit pack.

b. measure the optical signal power at the inputs to the OCLD, OSC, and MOTR Rx fibers and work back to the point where the signal degrade occurs.

If	Then
the alarm clears	you have completed this procedure
the alarm remains	contact your next level of support

—end—

Procedure 15-23
OSC—Site Input Failure

This alarm indicates that there is a broken WDM fiber between this site and the adjacent site to the east or west. The alarm is raised against either the east OSC facility or the west OSC facility. This alarm is only raised if IFS is enabled.

Probable cause

This alarm becomes active when the intrasite fault sectionalization (IFS) feature is enabled in the ring, and the following conditions exist:

- there is an OSC–Loss of Signal (LOS)
- all bands inbound at this site in the same direction as the Site Input Failure and have the same OSID as the OSC are reporting a Band Input Failure (or loss of signal for a single-channel band) at the first place where they are dropped (at this site or a site downstream)

Impact

Critical, service-affecting.

Action

Step	Action	
1	Use a fiber topology diagram to determine if the site with the active “Site Input Failure” alarm is an OADM/Terminal or OFA site.	
2	**If** the site is an	**Then** go to
	OADM/Terminal site	step 3
	OFA site	step 5

For an OADM/Terminal site

3 Use System Manager to check that

- all channels in all bands entering this site in the direction of the Site Input Failure are reporting Band Alarm Indication Signal at the first shelf that they are dropped (at this site or at downstream sites)
- all pre-APBEs and pre-OFAs at this site in the direction of the Site Input Failure are reporting Band Alarm Indication Signal

—continued—

Procedure 15-23 (continued)
OSC—Site Input Failure

Step	Action

4

If	Then
all pre-APBEs, pre-OFAs, and bands entering the site are reporting Band Alarm Indication Signal	an inter-site fiber is broken. Go to step 7.
otherwise	there is a site fibering problem or the equipment is incorrectly provisioned. Contact your next level support.

For an OFA site

5 Use System Manager to check that

- all thru-OFAs and thru-APBEs at this site in the direction of the Site Input Failure are reporting Band Alarm Indication Signal
- all channels in all bands entering this site in the direction of the Site Input Failure are reporting Band Alarm Indication Signal at the first shelf that they are dropped (at a downstream site)

6

If	Then
all thru-OFAs and thru- APBEs and bands entering this site are reporting Band Alarm Indication Signal	an inter-site fiber is broken. Go to step 7.
otherwise	there is a site fibering problem or the equipment is incorrectly provisioned. Contact your next level support.

7 Take the appropriate action to repair the outside fiber plant. Go to the next step.

8

If	Then
the alarm clears	you have completed this procedure
the alarm remains	contact your next level of support

—end—

Procedure 15-24
OSC—Unequipped Remote Port

Probable cause

This alarm becomes active when the remote WSC port is unequipped or out-of-service.

Impact

Minor, non-service-affecting.

Precautions

CAUTION
Risk of affecting network reliability
Make sure that all connectors are cleaned before you make the connections (or re-connections) described in this procedure. For cleaning information, see the chapter "Cleaning connectors" in *Installing Optical Metro 5200 Shelves and Components*, 323-1701-201.

Action

Step	Action
1	Make sure that the far-end OSC WSC port is connected to the subtending equipment.
2	If the far-end WSC facility is out-of-service (OOS), put it in-service. Follow Procedure 3-12 "Putting a WSC facility in-service on an OSC circuit pack" in *Provisioning and Operating Procedures*, 323-1701-310.

If	Then
the alarm clears	you have completed this procedure
the alarm remains	contact your next level of support

—end—

Procedure 15-25
OSC—Unknown Circuit Pack

Probable cause

This alarm becomes active when

- the SP circuit pack fails to retrieve the manufacturing data on the circuit pack (data may be missing or may be incorrect)

or when

- the circuit pack type cannot be recognized by the software (the Release version of the circuit pack is not supported by the Release version of the shelf)

If the slot is provisioned for an OSC, the System Manager displays OSC in the Card column of the Fault–Active Alarms window.

Impact

Major, non-service-affecting.

Precautions

CAUTION
Risk of affecting network reliability
Make sure that all connectors are cleaned before you make the connections (or re-connections) described in this procedure. For cleaning information, see the chapter "Cleaning connectors" in *Installing Optical Metro 5200 Shelves and Components*, 323-1701-201.

—continued—

Procedure 15-25 (continued)
OSC—Unknown Circuit Pack

Action

Step	Action

1 Read the latest Baseline Report to see if the circuit pack is compatible with the Release version of the shelf.

Note: Baseline Reports are available through Nortel Networks Technical Assistance. Refer to the "Technical assistance service telephone numbers" section in "About this document" at the beginning of this book.

If the circuit pack	**Then**
is compatible	go to step 3
is incompatible	replace it with a compatible circuit pack. Follow Procedure 3-9 "Replacing an OSC circuit pack" in *Maintenance and Replacement Procedures,* 323-1701-546. Go to the next step.

2

If	**Then**
the alarm clears	you have completed this procedure
the alarm remains	go to the next step

3 Reseat the OSC. Follow Procedure 3-68 "Reseating a circuit pack" in *Provisioning and Operating Procedures,* 323-1701-310.

If	**Then**
the alarm clears	you have completed this procedure
the alarm remains	go to the next step

4 Replace the OSC. Refer to Procedure 3-9 "Replacing an OSC circuit pack" in *Maintenance and Replacement Procedures,* 323-1701-546.

If	**Then**
the alarm clears	the removed circuit pack has faults. You have completed this procedure.
the alarm remains	the circuit pack is not the problem. Reseat the original circuit pack. Contact your next level of support.

—end—

Procedure 15-26
OSC—Wayside Alarm Indication Signal

Probable cause

This alarm may be raised against either of the two WSC 100Fx ports (Port 3 or Port 4)

This alarm becomes active when the far-end wayside port is sending an alarm indication signal. One of the following conditions exists:

- the far-end WSC 100Fx equipment is not connected to the WSC port
- the far-end facility is OOS
- the far-end equipment is not completely provisioned

Impact

Warning, non-service-affecting.

Note: While the WSC is not functional, the problem exists at the far end.

Precautions

CAUTION
Risk of affecting network reliability
Make sure that all connectors are cleaned before you make the connections (or re-connections) described in this procedure. For cleaning information, see the chapter "Cleaning connectors" in *Installing Optical Metro 5200 Shelves and Components*, 323-1701-201.

Action

Step	Action
1	Use a fiber topology diagram to determine the OSC sites. Check the entry in the Port column on the Fault–Active Alarms window to determine where the alarm is raised.

If the entry is	**Then**
WSC-E	the alarm is raised on the east WSC port. Go to the next step.
WSC-W	the alarm is raised on the west WSC port. Go to the next step.

—continued—

Procedure 15-26 (continued)
OSC—Wayside Alarm Indication Signal

Step	Action
2	Make sure that the optical fiber is correctly connected at both ends and that there is no problem with the optical fiber plant between the OSC WSC port and the subtending equipment.
3	Make sure that the far-end 100Fx equipment is provisioned properly.
4	Use an optical power meter to measure the received power level at the Rx port of the affected OSC. Check if the Rx port power level is within the operational threshold. Write down the value. Refer to Table 2-54 in *Technical Specifications*, 323-1701-180 for the correct values.

5

If the Rx port power is	**Then** go to
within operational threshold	step 9
otherwise	the next step

6 Make sure that the transmitting subtending equipment is functioning correctly and transmitting a valid signal. If necessary, follow the appropriate troubleshooting procedures for the subtending equipment.

7

If	**Then**
the alarm clears	you have completed this procedure
the alarm remains	go to the next step

8 Use the proper cleaning kit to clean all the connectors between the subtending equipment Tx port and the OSC WSC Rx port. For information on cleaning, see "Cleaning connectors" in *Installing Optical Metro 5200 Shelves and Components,* 323-1701-201.

— Clean each connector separately.

— Record the operating power level after you clean each connector and compare it to the value you wrote down in step 4, this will allow you to see if there is any improvement to the Rx power.

If	**Then**
the alarm clears	you have completed this procedure
the alarm remains	go to the next step

9 Reseat the OSC circuit pack. Follow Procedure 3-68 "Reseating a circuit pack" in *Provisioning and Operating Procedures,* 323-1701-310.

If	**Then**
the alarm clears	you have completed the procedure
the alarm remains	go to the next step

—continued—

Procedure 15-26 (continued)
OSC—Wayside Alarm Indication Signal

Step	Action
10	Replace the OSC circuit pack. Follow Procedure 3-9 “Replacing an OSC circuit pack” in *Maintenance and Replacement Procedures,* 323-1701-546.

If	Then
the alarm clears	the removed circuit pack has faults. You have completed this procedure.
the alarm remains	the circuit pack is not the problem. Reseat the original circuit pack. Contact your next level of support

—end—

Clearing OTR alarms

Use the procedures in this chapter to clear OTR circuit pack alarms. Perform the steps in each procedure in the order that they appear. After you clear the alarm, stop the procedure. If the alarm does not clear, contact your next level of technical support.

For a list of OTR circuit pack types, see the "OTR circuit packs" section in *Hardware Description*, 323-1701-102.

Table 16-1 lists the meaning of the indicator lamps on OTR circuit packs.

Table 16-1
OTR indicator lamps

Indicator lamp	Color	State	Meaning
LOS (see Note 1 and Note 2)	yellow	on	The OTR is not receiving an optical signal.
		off	The OTR is receiving a signal.
ACTIVE	green	on	A channel assignment has been provisioned on the OTR and both facilities (Line and Client) are in-service.
		off	• A channel assignment has been provisioned on the OTR and either facility (Line and/or Client) is out-of-service. or • No channel assignments have been provisioned on the circuit pack.

Table 16-1 (continued)
OTR indicator lamps

Indicator lamp	Color	State	Meaning
STATUS	green/red	green	The OTR is functioning normally and the inventory is in-service.
		red	The OTR circuit pack has failed.
		off	The OTR circuit pack has not failed but the OTR inventory is out-of-service.
		flashing	The OTR is the active database-carrying circuit pack during a database copy operation. (See Note 3.)

Note 1: There are two yellow LOS indicator lamps on the OTR 10 Gbit/s and OTR 2.5 Gbit/s Flex circuit packs, one for the client-side interface and one for the WDM line-side interface.

Note 2: LOS descriptions are based on the condition that the corresponding facility exists.

Note 3: Do not remove the active database-carrying circuit pack during the database copy to the standby circuit pack.

Before you begin

Read "Troubleshooting the Optical Metro 5100/5200" chapter in Part 1 of the *Trouble Clearing and Alarm Reference Guide,* for detailed information on how to respond to alarm indicators (audible alarms and lamps). The "Alarm description" chapter in Part 1 of the *Trouble Clearing and Alarm Reference Guide* explains events, warnings, and error messages.

Requirements

CAUTION
Risk of electrostatic discharge
Observe all antistatic precautions when handling the circuit packs.

Exposed circuit packs can be damaged by electrostatic discharge. When handling circuit packs always wear a wrist strap that is grounded to the shelf maintenance panel, and shoe straps if necessary. For more information, refer to the "Handling circuit packs" section of "Isolating faults that do not generate alarms" in Part 1 of the *Trouble Clearing and Alarms Reference Guide*.

CAUTION
Risk of recovery procedures affecting traffic
Some of the alarms in this chapter may not be service-affecting, however the recovery action can be service-affecting.

CAUTION
Risk of laser radiation
The Optical Metro 5100/5200 operates up to a Hazard Level of k x 3A (IEC 60825-2:2000) or 1M (IEC 60825-2:2004). Use only viewing instruments with proper optical attenuation.

CAUTION
Risk of affecting network reliability
Make sure that all connectors are cleaned before you make the connections (or re-connections) described in this procedure. For cleaning information, see the chapter "Cleaning connectors" in *Installing Optical Metro 5200 Shelves and Components*, 323-1701-201.

Procedure list

Table 16-2 lists the procedures in this chapter and indicates whether or not the alarm is masked if the equipment or facility that raises the alarm is out-of-service.

Table 16-2
Procedures for clearing OTR alarms

Procedure	Page	Alarm is masked if equipment or facility is OOS
16-1 OTR—Alarm Indication Signal	16-6	Facility
16-2 OTR—Autoprovisioning Mismatch, Circuit Pack Mismatch	16-8	Equipment
16-3 OTR—Automatic Switch to Protection Path active	16-12	Not applicable
16-4 OTR—Backward Defect Indication	16-13	Facility
16-5 OTR—Bit Error Rate (BER) Degrade	16-14	Facility
16-6 OTR—Circuit Pack Failed	16-22	Equipment
16-7 OTR—Circuit Pack Minor Mismatch	16-24	Equipment
16-8 OTR—Circuit Pack Missing	16-25	Equipment
16-9 OTR—Far End Circuit Pack Mismatch	16-28	Equipment
16-10 OTR—Facility Loopback	16-30	Not applicable
16-11 OTR—Fiber Mismatch	16-31	Facility
16-12 OTR—Forced Switch to East Path Active, Forced Switch to West Path Active	16-33	Not applicable
16-13 OTR—High Bit Error Rate	16-34	Facility
16-14 OTR—High Optical Power	16-38	Facility
16-15 OTR—High Optical Power Warning	16-50	Facility
16-16 OTR—Incompatible Optical System Identifier	16-60	Equipment
16-17 OTR—Incomplete Provisioning	16-62	Equipment
16-18 OTR—Inter-card Communication Failure	16-64	Equipment
16-19 OTR—Invalid Provisioning	16-67	Equipment
16-20 OTR—Invalid Signal (optical receiver)	16-69	Facility
16-21 OTR—Local Fault	16-74	Facility
16-22 OTR—Loss of Frame	16-76	Facility

Table 16-2 (continued)
Procedures for clearing OTR alarms

Procedure	Page	Alarm is masked if equipment or facility is OOS
16-23 OTR—Loss of Lock	16-90	Facility
16-24 OTR—Loss of Signal	16-96	Facility
16-25 OTR—Low Optical Power Warning	16-112	Facility
16-26 OTR—Manual Switch to (West) or (East) path active	16-124	Not applicable
16-27 OTR—Optical Receiver Overload	16-125	Equipment
16-28 OTR—Optical System Identifier Mismatch	16-134	Equipment
16-29 OTR—Overhead Link Failure, Loss of Overhead Synchronization	16-135	Not applicable
16-30 OTR—Path Lockout Active	16-141	Not applicable
16-31 OTR—Performance Monitoring Timer Failed	16-142	Equipment
16-32 OTR—Protection Mate Circuit Pack Not Available	16-145	Facility
16-33 OTR—Remote Automatic Laser Shutdown	16-146	Facility
16-34 OTR—Remote Defect Indication	16-148	Facility
16-35 OTR—Remote Fault	16-153	Facility
16-36 OTR—Surrogate Alarm Indication Signal	16-155	Facility
16-37 OTR—TCA - Optical Power Rx High	16-156	Facility
16-38 OTR—TCA - Optical Power Rx Low	16-166	Facility
16-39 OTR—TCA - Optical Power Tx High	16-173	Facility
16-40 OTR—TCA - Optical Power Tx Low	16-177	Facility
16-41 OTR—Transceiver Degrade	16-181	Equipment
16-42 OTR—Tx Alarm Indication Signal	16-183	Facility
16-43 OTR—Tx High Bit Error Rate	16-185	Facility
16-44 OTR—Tx Loss of Frame	16-189	Facility
16-45 OTR—Tx Loss of Synchronization	16-193	Facility
16-46 OTR—Unassigned Optical System Identifier	16-198	Equipment
16-47 OTR—Unknown Circuit Pack	16-200	Equipment

Procedure 16-1
OTR—Alarm Indication Signal

This alarm can be raised on the client-side and line-side interfaces.

Probable cause

This alarm becomes active on the client-side when the subtending equipment sends the SONET/SDH Alarm Indication Signal. It becomes active on the line-side when the remote OTR sends a Wrapper Alarm Indication Signal.

When raised against the client facility, this alarm indicates that there is an identified problem at the subtending equipment or facility. When raised against the line facility, this alarm indicates that there is a problem at the far-end OTR.

Impact

Warning, non-service-affecting.

Action

Step	Action
1	Check the entry in the Port column on the Fault–Active Alarms window to determine where the alarm is raised. A Port entry of “1–CS” indicates that the alarm is on the client-side, and “2–LS” indicates that the alarm is on the line-side.
2	**If** the alarm is raised / **Then** on the client-side: make sure that the subtending equipment is functioning properly and transmitting a valid signal. on the line-side: go to the next step

—continued—

Procedure 16-1 (continued)
OTR—Alarm Indication Signal

Step	Action
3	Make sure that **a.** both the line facility and client facility on the far-end OTR are in-service. Refer to Procedure 3-10 “Putting a circuit pack or SFP facility in-service” in *Provisioning and Operating Procedures*, 323-1701-310. Use a network topology diagram to determine the far-end site. **b.** there is channel assignment on the far-end OTR. Follow Procedure 3-3 “Making or modifying channel assignments” in *Provisioning and Operating Procedures*, 323-1701-310. **c.** there is no Loss of Signal, Loss of Frame, or Loss of Lock alarm on the client facility on the far-end OTR. Follow Procedure 16-22 “OTR—Loss of Frame”, Procedure 16-23 “OTR—Loss of Lock”, and Procedure 16-24 “OTR—Loss of Signal”.

4

If	Then
the alarm clears	you have completed this procedure
the alarm remains	contact your next level of support

—end—

Procedure 16-2
OTR—Autoprovisioning Mismatch, Circuit Pack Mismatch

Probable cause

These alarms are raised against newly installed equipment, and in replacements procedures when the incorrect type of circuit pack is seated.

The Autoprovisioning Mismatch alarm becomes active when an OTR circuit pack is seated in a shelf of type OFA.

OTR circuit packs are supported in shelves of type OADM, Terminal, or Mixed.

The Circuit Pack Mismatch alarm becomes active when the wrong type of OTR, or a circuit pack other than an OTR is seated in a slot provisioned for an OTR

Impact

Table 16-3 lists the impact that these alarms have under different conditions.

Table 16-3
OTR Autoprovisioning Mismatch, Circuit Pack Mismatch alarm impact

Alarm	Conditions	Severity	Impact
Autoprovisioning Mismatch	N/A	Major	Non-service-affecting
Circuit Pack Mismatch	The alarm will be critical if the following conditions exist: • if there is a channel assignment and the circuit pack is in service • the path assigned to the circuit pack is unprotected • the path assigned to the circuit pack is protected and the matching OTR has an alarm condition	Critical	Service-affecting
	The alarm will be major if the following conditions exist: • if there are no channel assignments on the circuit pack • the path assigned is protected and the matching OTR is operating correctly	Major	Non-service-affecting

—continued—

Procedure 16-2 (continued)
OTR—Autoprovisioning Mismatch, Circuit Pack Mismatch

Precautions

CAUTION
Risk of recovery procedures affecting traffic
This alarm may not be service-affecting, however the recovery action can be service-affecting.

CAUTION
Risk of affecting network reliability
Make sure that all connectors are cleaned before you make the connections (or re-connections) described in this procedure. For cleaning information, see the chapter "Cleaning connectors" in *Installing Optical Metro 5200 Shelves and Components*, 323-1701-201.

Action

Step	Action
1	Determine the shelf type: OADM, Terminal, or OFA. On the Configuration-Communications screen of the System Manager, look in the "Shelf Type" column.

2

If the shelf type is	**Then**
an OFA shelf and should be an OFA shelf	remove any circuit packs other than OFAs or APBEs that are seated in slots 1-8 or 11-18. Go to step 3.
an OFA shelf but should be an OADM or terminal shelf	follow Procedure 4-1 "Decommissioning a shelf" in *Provisioning and Operating Procedures*, 323-1701-310, and Chapter 3 "Commissioning a shelf" in *Commissioning Procedures*, 323-1701-220. Go to step 4.
the shelf type is an OADM or terminal shelf	go to step 4

3

If	**Then**
the alarm clears	you have completed this procedure
the alarm remains	contact your next level of support

—continued—

Procedure 16-2 (continued)
OTR—Autoprovisioning Mismatch, Circuit Pack Mismatch

Step	Action
4	Make sure that the circuit pack in the slot is an OTR.

If	Then
the circuit pack is not an OTR	insert and seat an OTR in the slot. Follow Procedure 7-1 “Inserting circuit packs” in *Installing Optical Metro 5200 Shelves and Components* 323-1701-201. If the alarm clears, you have completed this procedure.
the circuit pack is an OTR	go to the next step

5 Make sure the slot is provisioned correctly for the circuit pack type. Do this by double-clicking on the OTR in the Equipment-Inventory list. Under “Provisioning Data” check to see that the “Circuit Pack Type” and “Max Bit Rate” correctly correspond to the actual circuit pack seated in the slot.

6

If	Then
the path is protected	switch traffic off of the OTR. Follow Procedure 3-48 “Forcing traffic to one path on a protected channel” in *Provisioning and Operating Procedures*, 323-1701-310. Go to the next step.
the path is unprotected	go to the next step. Performing the next step may affect traffic.

7

If the slot is	**Then** go to
incorrectly provisioned	the next step
correctly provisioned	step 13

8 Take the OTR OOS, follow Procedure 3-13 “Taking a circuit pack facility or SFP facility out-of-service” (if applicable) and then Procedure 3-8 “Taking a circuit pack or SFP out-of-service” in *Provisioning and Operating Procedures*, 323-1701-310.

9 If there are facilities associated with the OTR, delete them. Follow Procedure 3-14 “Deleting a circuit pack or SFP facility” in *Provisioning and Operating Procedures*, 323-1701-310.

10 Delete the OTR equipment. Follow Procedure 3-9 “Deleting a circuit pack or SFP from the inventory” in *Provisioning and Operating Procedures*, 323-1701-310.

—continued—

Procedure 16-2 (continued)
OTR—Autoprovisioning Mismatch, Circuit Pack Mismatch

Step	Action	
11	**If**	**Then**
	you need to manually pre-provision the slot	follow Procedure 3-2 "Manually provisioning a circuit pack or SFP" procedures in *Provisioning and Operating Procedures*, 323-1701-310
	you do not need to manually pre-provision the slot	insert the correct OTR and it will auto-provision. Follow Procedure 7-1 "Inserting circuit packs" in *Installing Optical Metro 5200 Shelves and Components* 323-1701-201.
12	**If**	**Then**
	the alarm clears	you have completed this procedure
	the alarm remains	go to the next step
13	Reseat the OTR. Follow Procedure 3-68 "Reseating a circuit pack" in *Provisioning and Operating Procedures,* 323-1701-310.	
	If	**Then**
	the alarm clears	you have completed this procedure
	the alarm remains	go to the next step
14	Replace the OTR. Follow Procedure 3-5 "Replacing an OTR circuit pack" in *Maintenance and Replacement Procedures*, 323-1701-546.	
	If	**Then**
	the alarm clears	the removed circuit pack is faulty. You have completed this procedure.
	the alarm remains	the circuit pack is not the problem. Reseat the original circuit pack. Contact your next level of support.

ATTENTION

If you set a forced switch on the path, make sure you remove the switch when the procedure is completed. Follow Procedure 3-49 "Removing a manual, force, or lockout switch from a protection path" in *Provisioning and Operating Procedures*, 323-1701-310.

—end—

Procedure 16-3
OTR—Automatic Switch to Protection Path active

Probable cause

This alarm becomes active when a fault occurs on the working path of a protected, revertive connection, and traffic automatically switches from the configured path to the protection path. This alarm is available only if the Revertive mode is enabled for the given connection.

Impact

Minor, non-service-affecting.

Action

Step	Action	
1	Use *Trouble Clearing and Alarm Reference Guide,* 323-1701-542, as a guide to clear all faults on the configured path.	
2	**If**	**Then**
	the alarm clears	you have completed this procedure
	the alarm remains	contact your next level of support

—end—

Procedure 16-4
OTR—Backward Defect Indication

This alarm is raised on the Rx line-side interface of the OTR 10 Gbit/s Enhanced circuit pack.

Probable cause

This alarm becomes active when the remote line-side OTR 10 Gbit/s Enhanced circuit pack detects a loss of signal, loss of frame, alarm indication signal, or high optical power.

Impact

Warning, non-service-affecting.

Requirements

In order to clear this alarm, the trouble that is causing the line-side upstream equipment to send the BDI signal must be determined and fixed. Use the System Manager to examine the alarms raised by the OTRs, or other equipment in the signal path, to isolate the cause.

Action

Step	Action
1	In System Manager, open the Fault–Active Alarms window.
2	Examine the alarms that are raised to identify the cause of this fault. Follow the appropriate procedures to clear the alarms.

If	Then
the RDI alarm clears	you have completed this procedure
the RDI alarm remains	contact your next level of support

—end—

Procedure 16-5
OTR—Bit Error Rate (BER) Degrade

This facility alarm occurs when the bit error rate on the line-side of the OTR exceeds 10^{-6}. This bit error rate is measured before the Forward Error Correction (FEC) routine, which is used to automatically correct bit errors generated within the Optical Metro 5100/5200 ring. Therefore, the effective bit error rate is much less than 10^{-6}, and bit errors may not actually be detected.

The alarm is an early warning that there is something wrong with the signal and that maintenance action may be required on the line-side.

Probable cause

This alarm is an indication of a signal degrade condition.

If there is a miniature VOA on the fiber to attenuate the signal, it may not be operating correctly.

Impact

Minor, non-service-affecting.

Precautions

CAUTION
Risk of recovery procedures affecting traffic
This alarm is not service-affecting, however the recovery action can be service-affecting.

CAUTION
Risk of affecting network reliability
Make sure that all connectors are cleaned before you make the connections (or re-connections) described in this procedure. For cleaning information, see the chapter "Cleaning connectors" in *Installing Optical Metro 5200 Shelves and Component*s, 323-1701-201.

—continued—

Procedure 16-5 (continued)
OTR—Bit Error Rate (BER) Degrade

Action

Step	Action
1	At the downstream shelf, use the System Manager to check if you are receiving OTR—Bit Error Rate (BER) Degrade alarms on all (or most) OTRs in the same east/west plane, or just on a single OTR.

If	**Then** go to
the alarm appears on the only OTR in the east/west plane	step 2
the alarm appears on all (or most) OTRs in the same east/west plane	step 4
the alarm appears on one of multiple OTRs in the same east/west plane	step 6

2

If	**Then**
there are amplifiers between the upstream and downstream OTR	there is a problem at the amplifier site, the ring requires re-equalization, or both. Contact your next level of support to troubleshoot. If troubleshooting does not clear the alarm, go to step 6.
there are no amplifiers between the upstream and downstream OTR	there is a problem with the line fiber between the sites. Go to the next step.

—continued—

Procedure 16-5 (continued)
OTR—Bit Error Rate (BER) Degrade

Step	Action
3	Investigate the line fiber between the upstream OTR and the downstream OTR for loss or degrade.

CAUTION
Risk of loss of traffic across multiple wavelengths in the band
Disturbing the line fiber affects traffic on the entire band/direction. If the traffic is protected, follow Procedure 3-48 "Forcing traffic to one path on a protected channel" in *Provisioning and Operating Procedures*, 323-1701-310 to switch traffic for the OTR in the east/west plane before proceeding. If the traffic is not protected, you will drop traffic.

CAUTION
DISABLE AUTOMATIC LASER SHUTDOWN
If Automatic Laser Shutdown (ALS) is enabled, disable ALS for all shelves that will be affected by this maintenance activity. Use a network topology diagram and channel listing to determine the upstream and downstream sites that will be affected when the ring is opened. If you do not know if ALS is enabled or not, assume it is enabled. Follow Procedure 1-43 "Enabling or disabling automatic laser shutdown" in *Provisioning and Operating Procedures*, 323-1701-310 to disable ALS.

- Using a power meter, a cleaning kit, and a network topology diagram, start at the upstream site and clean every connector on the path until you reach the downstream site. Measure the power with the power meter after each cleaning to check for improvements in the line power. For information on cleaning, see "Cleaning connectors" in *Installing Optical Metro 5200 Shelves and Components,* 323-1701-201.

—continued—

Procedure 16-5 (continued)
OTR—Bit Error Rate (BER) Degrade

Step	Action
	• Also, check for damaged, kinked, tightly-bent fiber, or anything else that might impede the optical signal. This includes optical filters such as OMXs or C&L Splitter/Couplers. Replace any damaged fibers or filters. If you find a faulty component or filter refer to Chapter 2 "Replacing shelf components" in *Maintenance and Replacement Procedures* in 323-1701-546.

If	Then
the alarm clears	you have completed this procedure
the alarm remains	go to step 6

Step	If	Then
4	there are amplifiers between the upstream and downstream OTRs	there is a problem at the amplifier site, the ring requires re-equalization, or both. Contact your next level of support.
	there are no amplifiers between the upstream and downstream OTRs	there is a problem with the line fiber between the sites. Go to the next step.

—continued—

Procedure 16-5 (continued)
OTR—Bit Error Rate (BER) Degrade

Step	Action
5	The line fiber between the upstream OTRs and the downstream OTRs must be investigated for loss or degrade.

CAUTION
Risk of loss of traffic across multiple wavelengths in the band
Disturbing the line fiber affects traffic on the entire band/direction. If the traffic is protected, follow Procedure 3-48 "Forcing traffic to one path on a protected channel" in *Provisioning and Operating Procedures*, 323-1701-310 to switch traffic for every OTR in the east/west plane before proceeding. If the traffic is not protected, you will drop traffic.

CAUTION
DISABLE AUTOMATIC LASER SHUTDOWN
If Automatic Laser Shutdown (ALS) is enabled, disable ALS for all shelves that will be affected by this maintenance activity. Use a network topology diagram and channel listing to determine the upstream and downstream sites that will be affected when the ring is opened. If you do not know if ALS is enabled or not, assume it is enabled. Follow Procedure 1-43 "Enabling or disabling automatic laser shutdown" in *Provisioning and Operating Procedures*, 323-1701-310 to disable ALS.

- Using a power meter, a cleaning kit, and a network topology diagram, start at the upstream site and clean every connector on the path until you reach the downstream site. Measure the power with the power meter after each cleaning to check for improvements in the line power. For information on cleaning, see "Cleaning connectors" in *Installing Optical Metro 5200 Shelves and Components,* 323-1701-201.
- Also, check for damaged, kinked, tightly-bent fiber, or anything else that might impede the optical signal. This includes optical filters such as OMXs or C&L Splitter/Couplers. Replace any damaged fibers or filters. If you find a faulty component or filter refer to Chapter 2 "Replacing shelf components" in *Maintenance and Replacement Procedures* in 323-1701-546.

—continued—

Procedure 16-5 (continued)
OTR—Bit Error Rate (BER) Degrade

Step	Action

If	Then
the alarm clears	you have completed this procedure
the alarm remains	contact your next level of support

6

If	Then
the path is protected	switch traffic off of the OTR. Follow Procedure 3-48 "Forcing traffic to one path on a protected channel" in *Provisioning and Operating Procedures*, 323-1701-310. Go to the next step
the path is unprotected	go to the next step. Performing the next step may affect traffic.

7 If Automatic Laser Shutdown (ALS) is enabled, disable ALS for both the near-end and far-end shelves which contain the alarming OTR and its corresponding upstream OTR. Use a network topology diagram and channel listing to determine the near-end and far-end sites. If you do not know if ALS is enabled or not, assume it is enabled. Follow Procedure 1-43 "Enabling or disabling automatic laser shutdown" in *Provisioning and Operating Procedures*, 323-1701-310 to disable ALS.

8 Make sure the optical fiber is connected correctly on the OTR line-side Rx port at the near-end site and on the OTR line-side Tx port at the far-end site. If you are using the OMX 4CH + Fiber Manager, check both ends of the patch-cord between the OMX, the SC-LC patch panel, and the OTR.

Note: Use a network topology diagram to determine the near-end and far-end sites.

If	Then
the alarm clears	you have completed the procedure
the alarm remains	go to the next step

9 Make sure the transmitting subtending equipment is functioning correctly and transmitting a valid signal (bit-rate and protocol).

10 Using the System Manager, write down the power levels of the OTR line-side Rx port at both sites. Make sure that the power level received is within the operational threshold. Refer to Table 2-31 for the line-side specifications in *Technical Specifications*, 323-1701-180 for minimum and maximum Rx/Tx power levels.

Note: You can record the power level from the Equipment—Facility window in the System Manager.

—continued—

Procedure 16-5 (continued)
OTR—Bit Error Rate (BER) Degrade

Step	Action

11 Use the proper cleaning kit to clean all the connectors attached to the receiving (near-end) OTR line-side Rx port and to the line-side Tx port on the transmitting (far-end) OTR. For information on cleaning, see "Cleaning connectors" in *Installing Optical Metro 5200 Shelves and Components,* 323-1701-201. Use a network topology diagram to determine the transmitting (far-end) OTR.

Note: If you are using the OMX 4CH + Fiber Manager, clean both ends of the patch-cord between the OMX and the line-side OTR port.

— Clean each connector separately.

— Record the operating power level after you clean each connector and compare it to the value you wrote down in step 10, this will allow you to see if there is any improvement to the Rx power.

If	Then
the alarm clears	you have completed this procedure
the alarm remains	go to the next step

CAUTION
Risk of loss of traffic across multiple bands
Do not clean any optical fibers on the optical fiber plant, or on connections to the OMX. This affects traffic over multiple bands. Clean only the connections at the specified OTR circuit packs.

12 Make sure there is no problem with the optical fiber plant between the OTR and the subtending equipment. Use the proper cleaning kit to clean all the connectors between the OTR client-side and the subtending equipment. For information on cleaning, see "Cleaning connectors" in *Installing Optical Metro 5200 Shelves and Components,* 323-1701-201.

If	Then
the alarm clears	you have completed this procedure
the alarm remains	go to the next step

13 Reseat the near-end OTR.Follow Procedure 3-68 "Reseating a circuit pack" in *Provisioning and Operating Procedures,* 323-1701-310.

If	Then
the alarm clears	you have completed this procedure
the alarm remains	go to the next step

—continued—

Procedure 16-5 (continued)
OTR—Bit Error Rate (BER) Degrade

Step	Action
14	Replace the near-end OTR. Follow Procedure 3-5 "Replacing an OTR circuit pack" in *Maintenance and Replacement Procedures*, 323-1701-546.

If	Then
the alarm clears	the removed circuit pack is faulty. You have completed this procedure.
the alarm remains	the circuit pack is not the problem. Reseat the original circuit pack. Go to the next step.

15	Repeat step 13 and step 14 for the far-end OTR.
16	If the alarm remains, contact your next level of support.

ATTENTION

If you set a forced switch on the path, make sure you remove the switch when the procedure is completed. Follow Procedure 3-49 "Removing a manual, force, or lockout switch from a protection path" in *Provisioning and Operating Procedures*, 323-1701-310.

If you are using ALS and disabled it during this procedure, re-enable it for each site. Follow Procedure 1-43 "Enabling or disabling automatic laser shutdown" in *Provisioning and Operating Procedures*, 323-1701-310.

—end—

Procedure 16-6
OTR—Circuit Pack Failed

Probable cause

This alarm occurs when the circuit pack detects an equipment failure.

Impact

Table 16-4 lists the impact that the alarm has under different conditions.

Table 16-4
OTR Circuit Pack Failed alarm impact

Alarm	Conditions	Severity	Impact
Circuit Pack Failed	The alarm will be critical if the following conditions exist: • if there are channel assignments on the circuit pack and the circuit pack is in-service • if the path assigned to the circuit pack is unprotected • if the path assigned to the circuit pack is protected and the matching OTR has an alarm condition	Critical	Service-affecting
	The alarm will be major if the following conditions exist: • if there are no channel assignments on the circuit pack • the path assigned is protected and the matching OTR is operating correctly	Major	Non-service-affecting

—continued—

Procedure 16-6 (continued)
OTR—Circuit Pack Failed

Precautions

CAUTION
Risk of recovery procedures affecting traffic
This alarm may not be service-affecting, however the recovery action can be service-affecting.

CAUTION
Risk of affecting network reliability
Make sure that all connectors are cleaned before you make the connections (or re-connections) described in this procedure. For cleaning information, see the chapter "Cleaning connectors" in *Installing Optical Metro 5200 Shelves and Components*, 323-1701-201.

Action

Step	Action
1	Reseat the OTR. Follow Procedure 3-68 "Reseating a circuit pack" in *Provisioning and Operating Procedures*, 323-1701-310.

If	Then
the alarm clears	you have completed this procedure
the alarm remains	go to the next step

Step	Action
2	Replace the OTR. Follow Procedure 3-5 "Replacing an OTR circuit pack" in *Maintenance and Replacement Procedures*, 323-1701-546.

If	Then
the alarm clears	the removed circuit pack is faulty. You have completed this procedure.
the alarm remains	the circuit pack is not the problem. Reseat the original circuit pack. Contact your next level of support.

—end—

Procedure 16-7
OTR—Circuit Pack Minor Mismatch

Probable cause

This alarm becomes active when a Universal circuit pack is inserted in a slot that has been provisioned as a Flex circuit pack. The same applies when a Flex circuit pack is inserted in a slot that has been provisioned as a Universal circuit pack.

Impact

Minor, non-service-affecting.

Action

Step	Action
1	Use System Manager to locate the slot that is indicating the circuit pack minor mismatch.
2	

If	Then
the slot provisioning is correct and the circuit pack inserted needs to be replaced	go to step 3
The slot provisioning is incorrect and the right circuit pack is inserted	go to step 4

Step	Action
3	Follow Procedure 3-5 “Replacing an OTR circuit pack” in *Maintenance and Replacement Procedures*.
4	In the Equipment—Inventory window in System Manager, right click on the row displaying the slot number identified in step 1.
5	Click on Modify. *An Optical Inventory window opens*
6	

If the inserted circuit pack type is	**Then** go to
Universal	step 7
Flex	step 8

Step	Action
7	In the Flex Type field, select Universal and click **OK. Go to step 9.**
8	In the Flex Type field, select Flex and click on **OK**. **Go to step 9.**
9	

If	Then
the alarm clears	you have completed this procedure
the alarm remains	call your next level of support

—end—

Procedure 16-8
OTR—Circuit Pack Missing

Probable cause

This alarm occurs when the provisioned slot does not contain an OTR circuit pack or the OTR is not correctly seated in the slot.

Impact

Table 16-5 lists the impact that the alarm has under different conditions.

Table 16-5
OTR Circuit Pack Missing alarm impact

Alarm	Conditions	Severity	Impact
Circuit Pack Missing	The alarm will be critical if the following conditions exist: • if there are channel assignments on the circuit pack and the circuit pack is in-service • if the path assigned to the circuit pack is unprotected • if the path assigned to the circuit pack is protected and the matching OTR has an alarm condition	Critical	Service-affecting
	The alarm will be major if the following conditions exist: • if there are no channel assignments on the circuit pack • the path assigned is protected and the matching OTR is operating correctly	Major	Non-service-affecting

—continued—

Procedure 16-8 (continued)
OTR—Circuit Pack Missing

Precautions

CAUTION
Risk of recovery procedures affecting traffic
This alarm may not be service-affecting, however the recovery action can be service-affecting.

CAUTION
Risk of affecting network reliability
Make sure that all connectors are cleaned before you make the connections (or re-connections) described in this procedure. For cleaning information, see the chapter "Cleaning connectors" in *Installing Optical Metro 5200 Shelves and Components*, 323-1701-201.

Action

Step	Action	
1	Use System Manager to locate the slot that is indicating the missing circuit pack.	
2	**If**	**Then**
	the slot is empty but should contain an OTR	insert and seat the correct band and channel OTR in the slot. Follow Procedure 7-1 "Inserting circuit packs" in *Installing Optical Metro 5200 Shelves and Components*, 323-1701-201, and Procedure 2-1 "Powering up an Optical Metro 5200 shelf" in *Commissioning Procedures*, 323-1701-220. Go to the next step.
	the slot is intentionally left empty	go to step 4
	the slot contains an OTR	go to step 6
3	**If**	**Then**
	the alarm clears	you have completed this procedure
	the alarm remains	go to step 6

—continued—

Procedure 16-8 (continued)
OTR—Circuit Pack Missing

Step	Action
4	To clear the alarm if the slot is not used, follow these steps: **a.** Take the OTR OOS. Follow Procedure 3-13 "Taking a circuit pack facility or SFP facility out-of-service" (if applicable), and then Procedure 3-8 "Taking a circuit pack or SFP out-of-service" in *Provisioning and Operating Procedures*, 323-1701-310. **b.** If there are facilities associated with the OTR, delete them. Follow Procedure 3-14 "Deleting a circuit pack or SFP facility" in *Provisioning and Operating Procedures*, 323-1701-310. ***Note:*** If this OTR is a part of a connection, you will have to delete the connection first. Follow Procedure 3-4 "Deleting channel assignments". **c.** Delete the OTR equipment. Follow Procedure 3-9 "Deleting a circuit pack or SFP from the inventory" in *Provisioning and Operating Procedures*, 323-1701-310.
5	**If** — **Then** the alarm clears — you have completed this procedure the alarm remains — contact your next level of support
6	Reseat the OTR. Follow Procedure 3-68 "Reseating a circuit pack" in *Provisioning and Operating Procedures,* 323-1701-310 **If** — **Then** the alarm clears — you have completed this procedure the alarm remains — go to the next step
7	Replace the OTR. Follow Procedure 3-5 "Replacing an OTR circuit pack" in *Maintenance and Replacement Procedures*, 323-1701-546. **If** — **Then** the alarm clears — the removed circuit pack is faulty. You have completed this procedure. the alarm remains — the circuit pack is not the problem. Reseat the original circuit pack. Contact your next level of support.

—end—

Procedure 16-9
OTR—Far End Circuit Pack Mismatch

Probable cause

This alarm becomes active when the OTR or the far end OCLD or OTR at the opposite end of the line-side are not the same circuit pack type. For example, if the OTR is a Universal circuit pack type and the far end OCLD or OTR is Flex circuit pack type, this alarm will be raised at both ends of the link.

Impact

Minor, non-service-affecting.

Precautions

CAUTION
Risk of affecting network reliability
Make sure that all connectors are cleaned before you make the connections (or re-connections) described in this procedure. For cleaning information, see the chapter "Cleaning connectors" in *Installing Optical Metro 5200 Shelves and Components*, 323-1701-201.

Action

Step	Action
1	**If** the alarm is raised when / **Then** go to
	you are in the process of converting a circuit pack from Flex to Universal. — step 2
	you have replaced a circuit pack with a circuit pack type not matching the original circuit pack — step 3
	otherwise — step 4
2	Continue to execute Procedure 3-4 "Replacing Flex with Universal circuit packs or Universal with Flex circuit packs" in *Maintenance and Replacement Procedures*. Ensure that this procedure is run at both ends of the link. Go to step 5.
3	Follow procedure Procedure 3-5 "Replacing an OTR circuit pack" in *Maintenance and Replacement Procedures* so that the circuit pack matches what was originally provisioned. Go to step 5.

—continued—

Procedure 16-9 (continued)
OTR—Far End Circuit Pack Mismatch

Step	Action
4	Determine which end of the link is not provisioned with the correct circuit pack type. Execute Procedure 3-4 “Replacing Flex with Universal circuit packs or Universal with Flex circuit packs” in *Maintenance and Replacement Procedures*.
5	You have completed this procedure

—end—

Procedure 16-10
OTR—Facility Loopback

Probable cause

This alarm occurs at both the client and line interfaces. It becomes active when a loopback is enabled by a user.

A Facility Loopback alarm on the Client side means the optical signal received at the OTR Client Rx input is being looped back to the Client Tx output without continuing through the circuit pack.

A Facility Loopback alarm on the Line side means the optical signal received at the OTR Line Rx input is being looped back to the Line Tx output without continuing through the circuit pack.

This is a normal indication when the loopback is on for testing or maintenance purposes. Loopback is only allowed when the facility is out-of-service.

The facility loopback for the line side only works properly when there is a valid signal, not an Alarm Indication Signal.

Impact

Minor, non-service-affecting.

Action

Step	Action	
1	Determine if a facility loopback is active for testing or maintenance purposes.	
2	**If** the loopback is	**Then**
	necessary for testing or maintenance activities	you have completed this procedure
	not necessary	go to the next step
3	Release the loopback if it is not necessary. Refer to Procedure 3-60 "Removing a loopback using the System Manager" in *Provisioning and Operating Procedures*, 323-1701-310.	
4	**If**	**Then**
	the alarm clears	you have completed this procedure
	the alarm remains	contact your next level of support

—end—

Procedure 16-11
OTR—Fiber Mismatch

Probable cause

This alarm occurs only at the line-side interface when the OTR circuit pack detects an incorrect fiber connection.

This alarm is also raised if the line-side Rx connectors are reversed for two circuit packs of different bands or channels in the same shelf. For example, the Rx connector for B1C1 is connected to the Rx port of the B1C2 circuit pack.

The near OTR must be connected to a remote OTR with the same band number and channel number.

Impact

Major, non-service-affecting.

Incorrect OTR fiber connections may inhibit the ability of the OTR circuit pack to correctly report Shelf Input Failure alarms.

Precautions

CAUTION
Risk of affecting network reliability
Make sure that all connectors are cleaned before you make the connections (or re-connections) described in this procedure. For cleaning information, see the chapter "Cleaning connectors" in *Installing Optical Metro 5200 Shelves and Components*, 323-1701-201.

Action

Step	Action	
1	Verify that the corresponding OTRs at the near-end and the far-end sites have the same band number and channel number. Use a network topology diagram to determine where the far-end site is located.	
2	**If**	**Then**
	the alarm clears	you have completed this procedure
	the alarm remains	go to the next step

—continued—

Procedure 16-11 (continued)
OTR—High Bit Error Rate

Step	Action	
3	Verify that there is an appropriate fiber connection between the OTR and the OMX.	
4	**If**	**Then**
	the alarm clears	you have completed this procedure
	the alarm remains	contact your next level of support

—end—

Procedure 16-12
OTR—Forced Switch to East Path Active, Forced Switch to West Path Active

Probable cause

These alarms occur only at the client interface. They become active when you perform a forced switch on the specified path and the forced switch is active.

This is a normal indication when a forced switch is used for testing or maintenance activities.

Impact

Minor, non-service-affecting.

Action

Step	Action
1	Determine if a Force Switch is active for testing or maintenance purposes.
2	**If** the forced switch is / **Then** necessary for testing or maintenance activities — you have completed this procedure not necessary — go to the next step.
3	Release the forced switch if it is not necessary. Follow Procedure 3-49 "Removing a manual, force, or lockout switch from a protection path" in *Provisioning and Operating Procedures,* 323-1701-310. **If** / **Then** the alarm clears — you have completed this procedure the alarm remains — contact your next level of support

—end—

Procedure 16-13
OTR—High Bit Error Rate

This alarm is raised on the Rx client-side interface of the OTR 10 Gbit/s Enhanced circuit pack and only when the Rx client-side interface is in Lan Phy mode.

Probable cause

This alarm becomes active when the client Rx port detects too many errors in the PLS layer of the Ethernet signal.

Impact

Major, service-affecting.

Precautions

CAUTION
Risk of affecting network reliability
Make sure that all connectors are cleaned before you make the connections (or re-connections) described in this procedure. For cleaning information, see the chapter "Cleaning connectors" in *Installing Optical Metro 5200 Shelves and Components*, 323-1701-201.

—continued—

Procedure 16-13 (continued)
OTR—High Bit Error Rate

Action

Step	Action
1	Make sure the optical fiber is correctly connected.

If	Then
the connection is unprotected	check the fiber connections between the subtending equipment and the OTR. Go to the next step.
the connection is protected	check the fiber connections between the subtending equipment, the Transponder Protection Tray (TPT) and the OTR. Go to the next step.

2 Using the System Manager, or a power meter, record the Rx power on the client-side OTR Rx port. Check that the power level received is within the operational threshold. Refer to Table 2-30 for client-side specifications in *Technical Specifications*, 323-1701-180 for minimum and maximum Rx/Tx power levels. Write down the Rx power.

Note: You can record the power level from the Equipment—Facility window in the System Manager.

3 Make sure the transmitting subtending equipment is functioning correctly and transmitting a valid signal (correct bit rate and protocol).

4 Use the an optical power meter to measure the transmit power on the subtending equipment. Make sure it is working correctly and that the power of the transmitted signal is at the correct power level according to the manufacturer's specifications.

If	Then
the subtending equipment Tx laser is out of specification	repair or replace the subtending equipment. Go to the next step.
the subtending equipment Tx laser is within specification	go to step 13

5

If	Then
the alarm clears	you have completed this procedure
the alarm remains	go to the next step

—continued—

Procedure 16-13 (continued)
OTR—High Bit Error Rate

Step	Action

6

If	Then
there is a VOA attached to a the fiber between the OTR and the subtending equipment	re-adjust, check for proper functionality, and, if necessary, replace the VOA. Go to the next step.
there is no VOA attached to a fiber between the OTR and the subtending equipment	go to step 15

7

If	Then
the alarm clears	you have completed this procedure
the alarm remains	go to the next step

8 Use the proper cleaning kit to clean all the connectors between the subtending equipment Tx port and the OTR Rx port, and visa-versa. For information on cleaning, see "Cleaning connectors" in *Installing Optical Metro 5200 Shelves and Components,* 323-1701-201.

— Clean each connector separately.

— Record the operating power level after you clean each connector and compare it to the value you wrote down in step 9, this will allow you to see if there is any improvement to the Rx power.

— Make sure there is no problem with the optical fiber plant between the OTR and the subtending equipment.

If	Then
the client side is fibered in an unprotected configuration with a single OTR	clean every connector between the subtending equipment's Tx port, the SC-to-LC patch panel, and the OTR client-side Rx port. For information on cleaning, see "Cleaning connectors" in *Installing Optical Metro 5200 Shelves and Components,* 323-1701-201.
the client side is fibered in a protected configuration with two OTRs	clean every connector between the subtending equipment's Tx port, the Transponder Protection Tray, and the OTR client-side Rx port. For information on cleaning, see "Cleaning connectors" in *Installing Optical Metro 5200 Shelves and Components,* 323-1701-201.

If	Then
the alarm clears	you have completed this procedure
the alarm remains	go to the next step

—continued—

Procedure 16-13 (continued)
OTR—High Bit Error Rate

Step	Action
9	Reseat the OTR. Follow Procedure 3-68 “Reseating a circuit pack” in *Provisioning and Operating Procedures,* 323-1701-310.

If	Then
the alarm clears	you have completed this procedure
the alarm remains	go to the next step

Step	Action
10	Replace the OTR. Follow Procedure 3-5 “Replacing an OTR circuit pack” in *Maintenance and Replacement Procedures,* 323-1701-546.

If	Then
the alarm clears	the removed circuit pack is faulty. You have completed this procedure.
the alarm remains	the circuit pack is not the problem. Reseat the original circuit pack. Contact your next level of support.

—end—

Procedure 16-14
OTR—High Optical Power

This alarm can be raised on the client-side and line-side interfaces.

> ***Note:*** This alarm is not supported on the client-side of the OTR 2.5 Gbit/s Flex 850 nm circuit pack.

Probable cause

This alarm becomes active when the optical power level at the optical receiver has exceeded the Rx Fail Threshold of the Rx Power High parameter. One of the following conditions exists:

- the power of the signal being transmitted by the subtending equipment is too high (Client Side)
- the receiving OTR circuit pack is defective (Client or Line side)
- the transmitting OTR circuit pack is defective (Line side)
- the network contains amplifiers that are not equalized properly (Line if there is a miniature VOA on the fiber to attenuate the signal, it may not be operating correctly

—continued—

Procedure 16-14 (continued)
OTR—High Optical Power

Impact

Table 16-6 lists the impact that the alarm has under different conditions.

Table 16-6
OTR High Optical Power alarm impact

Alarm	Conditions	Severity	Impact
High Optical Power	The alarm reported on the line side is critical under the following conditions: • there are channel assignments on the circuit pack and the circuit pack is in-service • the path assigned to the circuit pack is unprotected or the path assigned to the circuit pack is protected and the matching OTR has an alarm condition	Critical	Service-affecting
	The alarm reported on the line side is minor under the following conditions: • if there are no channel assignments on the circuit pack • if the path assigned is protected and the matching OTR is operating correctly	Major	Non-service-affecting

Conditions for client side alarm

On the client side, the alarm is always critical if there are channel assignments on the circuit pack and the circuit pack is in-service.

—continued—

Procedure 16-14 (continued)
OTR—High Optical Power

Precautions

CAUTION
Risk of recovery procedures affecting traffic
This alarm may not be service-affecting, however the recovery action can be service-affecting.

CAUTION
Risk of affecting network reliability
Make sure that all connectors are cleaned before you make the connections (or re-connections) described in this procedure. For cleaning information, see the chapter "Cleaning connectors" in *Installing Optical Metro 5200 Shelves and Components*, 323-1701-201.

Action

Step	Action
1	Check the entry in the Port column on the Fault–Active Alarms window to determine where the alarm is raised.

If the entry is	**Then**
1–CS	the alarm is raised on the client side. Go to step 19.
2–LS	the alarm is raised on the line-side. Go to step 2.

Line side

2 Check the corresponding upstream OTR or, if applicable, Optical Fiber Amplifiers (OFA) for failures or alarms. Use a network topology diagram to determine the upstream OTRs and OFAs. Troubleshoot these alarms/failures before proceeding.

Note 1: A common cause of this alarm is problems with amplifier equalization. If this network uses OFAs, it is strongly recommended that you contact your next level of support to re-equalize the amplifiers.

Note 2: If the transmitting power on the upstream OTR is too high, you might see an OTR Transceiver Degrade alarm on the upstream shelf. Clear this alarm first by following Procedure 16-41 "OTR—Transceiver Degrade".

—continued—

Procedure 16-14 (continued)
OTR—High Optical Power

Step	Action
3	If Automatic Laser Shutdown (ALS) is enabled, disable ALS for both the near-end and far-end shelves which contain the alarming OTR and its corresponding upstream OTR. Use a network topology diagram and channel listing to determine the near-end and far-end sites. If you do not know if ALS is enabled or not, assume it is enabled. Follow Procedure 1-43 "Enabling or disabling automatic laser shutdown" in *Provisioning and Operating Procedures*, 323-1701-310 to disable ALS.
4	At the downstream shelf, use the System Manager to check if you are receiving OTR High Optical Power Warnings on all OTRs in the same east/west plane, or just on one OTR.

If the Rx power level is too high	**Then** go to
on the only OTR in the east/west plane	step 5
on all OTRs in the same east/west plane	step 7
on one of multiple OTRs in the same east/west plane	step 9

5	**If**	**Then**
	there are amplifiers between the upstream and downstream OTR	there is a problem at the amplifier site, the ring requires re-equalization, or both. Contact your next level of support to troubleshoot. If troubleshooting does not clear the alarm, go to step 9.
	there are no amplifiers between the upstream and downstream OTR	Go to the next step.

—continued—

Procedure 16-14 (continued)
OTR—High Optical Power

Step	Action
6	**CAUTION** **Risk of loss of traffic across multiple wavelengths in the band** Adding fixed pads to the front of the Band drop/Band Rx junction affects traffic on the band/direction. If the traffic is protected, follow Procedure 3-48 "Forcing traffic to one path on a protected channel" in *Provisioning and Operating Procedures*, 323-1701-310 to switch traffic for the OTR in the east/west plane before proceeding. Reduce the input power of the entire band by performing the following steps: • Pull-out the fiber going into the downstream OTR line-side Rx port and place it into an Optical Power meter. • Add a fixed pad attenuator to the front of the Band Drop/Band Rx junction of the corresponding OMX. The fixed pad attenuates the entire band and reduces the power on the OMX channel drop port. To determine the amount of attenuation, choose a fixed-pad with a value that is sufficient to lower the OTR line-side Rx power to within its operational threshold. Refer to Table 2-31 in *Technical Specifications*, 323-1701-180 for minimum and maximum Tx power levels. • Once you have verified with the power meter that the Rx power is within the operational threshold of the particular OTR line-side Rx port, replace the fiber into the OTR line-side Rx port. The alarm should clear. **CAUTION** **Risk of loss of traffic across multiple wavelengths in the band** Adding fixed pads to the front of the Band drop/Band Rx junction affects traffic on the entire band/direction. Follow Procedure 3-48 "Forcing traffic to one path on a protected channel" in *Provisioning and Operating Procedures*, 323-1701-310 to switch traffic for every OTR in the east/west plane before proceeding. ***Note:*** This indicates that there may be a discrepancy between the Network Modeling Tool (NMT) and the actual system. It may be necessary to contact your next level of support for the NMT attenuator values.

—continued—

Procedure 16-14 (continued)
OTR—High Optical Power

Step	Action	
	If	**Then**
	the alarm clears	you have completed this procedure
	the alarm remains	go to step 9
7	**If**	**Then**
	there are amplifiers between the upstream and downstream OTRs	there is a problem at the amplifier site, the ring requires re-equalization, or both. Contact your next level of support.
	there are no amplifiers between the upstream and downstream OTRs	Go to the next step.

—continued—

Procedure 16-14 (continued)
OTR—High Optical Power

Step	Action
8	**CAUTION** **Risk of loss of traffic across multiple wavelengths in the band** Adding fixed pads to the front of the Band drop/Band Rx junction affects traffic on the entire band/direction. If the traffic is protected, follow Procedure 3-48 "Forcing traffic to one path on a protected channel" in *Provisioning and Operating Procedures*, 323-1701-310 to switch traffic for every OTR in the east/west plane before proceeding. Reduce the input power of the entire band by performing the following steps: • Pull-out the fiber going into the downstream OTR line-side Rx port and place it into an Optical Power meter. • Add a fixed pad attenuator to the front of the Band Drop/Band Rx junction of the corresponding OMX. The fixed pad attenuates the entire band and reduces the power on all four OMX channel drop ports. To determine the amount of attenuation, choose a fixed-pad with a value that is sufficient to lower the OTR line-side Rx power to within its operational threshold. Refer to Table 2-31 in *Technical Specifications*, 323-1701-180 for minimum and maximum Tx power levels. • Once you have verified with the power meter that the Rx power is within the operational threshold of the particular OTR line-side Rx port, replace the fiber into the OTR line-side Rx port. The alarm should clear. **CAUTION** **Risk of loss of traffic across multiple wavelengths in the band** Adding fixed pads to the front of the Band drop/Band Rx junction affects traffic on the entire band/direction. Follow Procedure 3-48 "Forcing traffic to one path on a protected channel" in *Provisioning and Operating Procedures*, 323-1701-310 to switch traffic for every OTR in the east/west plane before proceeding. ***Note:*** This indicates that there may be a discrepancy between the Network Modeling Tool (NMT) and the actual system. It may be necessary to contact your next level of support for the NMT attenuator values.

—continued—

Procedure 16-14 (continued)
OTR—High Optical Power

Step	Action	
	If	**Then**
	the alarm clears	you have completed this procedure
	the alarm remains	contact your next level of support
9	**If**	**Then**
	the path is protected	switch traffic off of the OTR. Follow Procedure 3-48 “Forcing traffic to one path on a protected channel” in *Provisioning and Operating Procedures*, 323-1701-310.
	the path is unprotected	go to the next step. Performing the next step may affect traffic.
10	Make sure the optical fiber is connected correctly on the OTR line-side Rx port at the near-end site and on the OTR line-side Tx port at the far-end site. If you are using the OMX 4CH + Fiber Manager, check both ends of the patch-cords between the OMX, LC-to-SC patch panel, and the OTR. ***Note:*** Use a network topology diagram to determine the near-end (downstream) and far-end (upstream) sites.	
	If	**Then**
	the alarm clears	you have completed the procedure
	the alarm remains	go to the next step
11	Use the System Manager to check the received power level on the line-side Rx port of the near-end OTR. Write down the value. Refer to Table 2-31 in *Technical Specifications*, 323-1701-180 for minimum and maximum Rx/Tx power levels. ***Note:*** You can record the power level from the Equipment—Facility window in the System Manager.	
	If the power level is	**Then**
	above the operational threshold	go to step 14
	within the operational threshold	the problem is with the OTR. Go to the next step.

—continued—

Procedure 16-14 (continued)
OTR—High Optical Power

Step	Action
12	Reseat the OTR. Follow Procedure 3-68 “Reseating a circuit pack” in *Provisioning and Operating Procedures,* 323-1701-310.

If	Then
the alarm clears	you have completed this procedure
the alarm remains	go to the next step

13 Replace the near-end OTR. Follow Procedure 3-5 “Replacing an OTR circuit pack” in *Maintenance and Replacement Procedures*, 323-1701-546.

If	Then
the alarm clears	the removed circuit pack is faulty. You have completed this procedure.
the alarm remains	the circuit pack is not the problem. Reseat the original circuit pack. Contact your next level of support.

14 Use the System Manager to check the transmitting power of the corresponding upstream OTR. Refer to Table 2-31 in *Technical Specifications*, 323-1701-180 for minimum and maximum Rx/Tx power levels. Make sure that the transmit power level is within the operational threshold.

Note 1: You can record the power level from the Equipment—Facility window in the System Manager.

Note 2: The “upstream” OTR is the OTR that is originating the signal which the alarming “downstream” OTR is receiving. Use a network topology map to determine the “upstream” OTR.

Note 3: Refer to Table 2-31 in *Technical Specifications*, 323-1701-180 for minimum and maximum Tx power levels.

If the transmit power level is	**Then** go to
not within the operational threshold	the next step
within the operational threshold	step 17

15 Reseat the upstream OTR. Follow Procedure 3-68 “Reseating a circuit pack” in *Provisioning and Operating Procedures,* 323-1701-310.

If	Then
the alarm clears	you have completed this procedure
the alarm remains	go to the next step

—continued—

Procedure 16-14 (continued)
OTR—High Optical Power

Step	Action
16	Replace the upstream OTR. Follow Procedure 3-5 "Replacing an OTR circuit pack" in *Maintenance and Replacement Procedures*, 323-1701-546.

If	Then
the alarm clears	the removed circuit pack is faulty. You have completed this procedure.
the alarm remains	make sure the new card's line-side Tx port is within the operational threshold and go to the next step.

17 Reseat the downstream OTR. Follow Procedure 3-68 "Reseating a circuit pack" in *Provisioning and Operating Procedures,* 323-1701-310.

If	Then
the alarm clears	you have completed this procedure
the alarm remains	go to the next step

18 Replace the downstream OTR. Follow Procedure 3-5 "Replacing an OTR circuit pack" in *Maintenance and Replacement Procedures,* 323-1701-546.

If	Then
the alarm clears	the removed circuit pack is faulty. You have completed this procedure.
the alarm remains	the circuit pack is not the problem. Reseat the original circuit pack. Contact your next level of support.

ATTENTION

If you set a forced switch on the path, make sure you remove the switch when the procedure is completed. Follow Procedure 3-49 "Removing a manual, force, or lockout switch from a protection path" in *Provisioning and Operating Procedures*, 323-1701-310.

If you are using ALS and disabled it during this procedure, re-enable it for each site. Follow Procedure 1-43 "Enabling or disabling automatic laser shutdown" in *Provisioning and Operating Procedures*, 323-1701-310.

—continued—

Procedure 16-14 (continued)
OTR—High Optical Power

Step	Action

Client side

19

If	Then
the connection is unprotected	check the connections between the subtending equipment, the SC-to-LC patch panel, and the OTR.
the connection is protected	check the connections between the subtending equipment, the Transponder Protection Tray (TPT) and the OTR.

20 Using the System Manager, record the Rx power on the client-side of the OTR. Check that the power level received is within the operational threshold. Refer to Table 2-30 for client-side specifications in *Technical Specifications*, 323-1701-180 for minimum and maximum Rx/Tx power levels.

Note: You can record the power level from the Equipment—Facility window in the System Manager.

If	**Then** go to
the Rx power is too high	the next step
the Rx power is within the operational threshold	step 24

CAUTION
Risk of recovery procedures affecting traffic
Disconnecting the fiber will drop traffic. If necessary, route traffic to an alternate path (on another OTR, fiber, or system).

21 Use an optical power meter to measure the transmit power on the subtending equipment. Make sure it is working correctly and that the power of the transmitted signal is at the correct power level according to the manufacturer's specifications.

If	Then
the subtending equipment Tx laser is out of specification	repair or replace the subtending equipment. Go to the next step.
the subtending equipment Tx laser is within specification	go to step 23

—continued—

Procedure 16-14 (continued)
OTR—High Optical Power

Step	Action

22

If	Then
the alarm clears	you have completed the procedure
the alarm remains	contact your next level of support

23 Add an optical attenuator (fixed pad) somewhere in the path between the subtending equipment Tx port and the OTR Rx port. The optical attenuator value should be sufficient to reduce the power to an acceptable power level at the OTR client-side Rx port. Refer to Table 2-30 in *Technical Specifications*, 323-1701-180 for minimum and maximum receive thresholds.

Note: For the unprotected case, Nortel recommends putting the attenuator in the LC-to-SC optical patch panel. In the protected case, put the attenuator in the Transponder Protection Tray, specifically on the port that goes directly to the OTR client-side Rx port.

If	Then
the alarm clears	you have completed the procedure
the alarm remains	go to step 24

24 Reseat the OTR. Follow Procedure 3-68 “Reseating a circuit pack” in *Provisioning and Operating Procedures,* 323-1701-310.

If	Then
the alarm clears	you have completed this procedure
the alarm remains	go to the next step

25 Replace the OTR. Follow Procedure 3-5 “Replacing an OTR circuit pack” in *Maintenance and Replacement Procedures,* 323-1701-546.

If	Then
the alarm clears	the removed circuit pack is faulty. You have completed this procedure.
the alarm remains	the circuit pack is not the problem. Reseat the original circuit pack. Contact your next level of support.

—end—

Procedure 16-15
OTR—High Optical Power Warning

This alarm can be raised on the client-side and line-side interfaces.

> ***Note:*** This alarm is not supported on the client-side of the OTR 2.5 Gbit/s Flex 850 nm circuit pack.

Probable cause

This alarm becomes active when the optical power level at the optical receiver has exceeded the Rx Fail Threshold of the Rx Power High parameter.

The majority of OTR High Optical Power Warnings are caused by poor equalization. If there are OFAs in the network, check the equalization and contact your next level of support immediately.

Impact

Major, non-service-affecting.

CAUTION
Risk of recovery procedures affecting traffic
This alarm is not service-affecting, however the recovery action can be service-affecting.

CAUTION
Risk of affecting network reliability
Make sure that all connectors are cleaned before you make the connections (or re-connections) described in this procedure. For cleaning information, see the chapter "Cleaning connectors" in *Installing Optical Metro 5200 Shelves and Components*, 323-1701-201.

—continued—

Procedure 16-15 (continued)
OTR—High Optical Power Warning

Action

Step	Action
1	Check the entry in the Port column on the Fault–Active Alarms window to determine where the alarm is raised.

If the entry is	**Then**
1–CS	the alarm is raised on the client side. Go to step 19.
2–LS	the alarm is raised on the line side. Go to step 2.

Line side

2 Check the corresponding upstream OTR or, if applicable, Optical Fiber Amplifiers (OFA) for failures or alarms. Use a network topology diagram to determine the upstream OTRs and OFAs. Troubleshoot these alarms/failures before proceeding.

Note 1: A common cause of this alarm is problems with amplifier equalization. If this network uses OFAs, it is strongly recommended that you contact your next level of support to re-equalize the amplifiers.

Note 2: If the transmitting power on the upstream OTR is too high, you might see an OTR Transceiver Degrade alarm on the upstream shelf. Clear this alarm first by following Procedure 16-41 “OTR—Transceiver Degrade”.

3 If Automatic Laser Shutdown (ALS) is enabled, disable ALS for both the near-end and far-end shelves which contain the alarming OTR and its corresponding upstream OTR. Use a network topology diagram and channel listing to determine the near-end and far-end sites. If you do not know if ALS is enabled or not, assume it is enabled. Follow Procedure 1-43 “Enabling or disabling automatic laser shutdown” in *Provisioning and Operating Procedures*, 323-1701-310 to disable ALS.

4 At the downstream shelf, use the System Manager to check if you are receiving OTR High Optical Power Warnings on all (or most) OTRs in the same east/west plane or just on one OTR.

Note 1: You can record the power level from the Equipment—Facility window in the System Manager.

Note 2: Because OTR—High Optical Power Warning is a threshold warning, it may not appear on all OTRs. Check and see if the power levels on all OTRs are relatively high. Refer to Table 2-31 in *Technical Specifications*, 323-1701-180 for the OTR receive overload specifications.

—continued—

Procedure 16-15 (continued)
OTR—High Optical Power Warning

Step	Action

Note 3: On the Optical Metro 5200 shelf, the east plane is defined as slots11-18, the west plane is defined as slots 1-8. On the Optical Metro 5100 shelf, the east plane is defined as slots 3 and 4, while the west plane is defined as slots 1 and 2.

If the Rx power level is too high	**Then** go to
on the only OTR in the east/west plane	step 5
on all OTRs in the same east/west plane	step 7
on one of multiple OTRs in the same east/west plane	step 9

5

If	**Then**
there are amplifiers between the upstream and downstream OTR	there is a problem at the amplifier site, the ring requires re-equalization, or both. Contact your next level of support to troubleshoot. If troubleshooting does not clear the alarm, go to step 9.
there are no amplifiers between the upstream and downstream OTR	Go to the next step.

6 Reduce the input power of the band by performing the following steps:

CAUTION
Risk of loss of traffic across multiple wavelengths in the band
Adding fixed pads to the front of the Band drop/Band Rx junction affects traffic on the band/direction. Follow Procedure 3-48 "Forcing traffic to one path on a protected channel" in *Provisioning and Operating Procedures*, 323-1701-310 to switch traffic for the OTR in the east/west plane before proceeding.

- Add a fixed pad attenuator to the front of the Band Drop/Band Rx junction of the corresponding OMX. The fixed pad attenuates the entire band and reduces the power on the OMX channel drop port. To determine the amount of attenuation, choose a fixed-pad with a value that is sufficient to lower the OTR line-side Rx power to within its operational threshold. Refer to Table 2-31 in *Technical Specifications*, 323-1701-180 for minimum and maximum Rx power levels. The alarm should clear.

—continued—

Procedure 16-15 (continued)
OTR—High Optical Power Warning

Step	Action

- if any optical alarms remain on the OTR, contact the alarm clearing procedure in this book, for that card

Note: This indicates that there may be a discrepancy between the Network Modeling Tool (NMT) and the actual system. It may be necessary to contact your next level of support for the NMT attenuator values.

If	Then
the alarm clears	you have completed this procedure
the alarm remains	go to step step 9

7

If	Then
there are amplifiers between the upstream and downstream OTRs	there is a problem at the amplifier site, the ring requires re-equalization, or both. Contact your next level of support.
there are no amplifiers between the upstream and downstream OTRs	Go to the next step.

8 Reduce the input power of the entire band by performing the following steps:

CAUTION
Risk of loss of traffic across multiple wavelengths in the band
Adding fixed pads to the front of the Band drop/Band Rx junction affects traffic on the entire band/direction. Follow Procedure 3-48 "Forcing traffic to one path on a protected channel" in *Provisioning and Operating Procedures*, 323-1701-310 to switch traffic for every OTR in the east/west plane before proceeding.

- Add a fixed pad attenuator to the front of the Band Drop/Band Rx junction of the corresponding OMX. The fixed pad attenuates the entire band and reduces the power on all four OMX channel drop ports. To determine the amount of attenuation, choose a fixed-pad with a value that is sufficient to lower the OTR line-side Rx power to within its operational threshold. Refer to Table 2-31 in *Technical Specifications*, 323-1701-180 for minimum and maximum Rx power levels. The alarm should clear.

—continued—

Procedure 16-15 (continued)
OTR—High Optical Power Warning

Step	Action

- Using the System Manager, under Equipment-Facilities, check the Rx powers of all OTRs at the downstream site and verify they are at the correct operational threshold. All OTRs in the band should have the same approximate Rx power. If any OTRs have lower Rx powers, clean the pigtail (or both ends of the patch-cord) going into the respective OTR Rx port. For information on cleaning, see "Cleaning connectors" in *Installing Optical Metro 5200 Shelves and Components,* 323-1701-201.
- if any optical alarms remain on any of the OTRs, contact the alarm clearing procedure in this book, for that card

Note: This indicates that there may be a discrepancy between the Network Modeling Tool (NMT) and the actual system. It may be necessary to contact your next level of support for the NMT attenuator values.

If	Then
the alarm clears	you have completed this procedure
the alarm remains	contact your next level of support

9

If	Then
the path is protected	switch traffic off of the OTR. Follow Procedure 3-48 "Forcing traffic to one path on a protected channel" in *Provisioning and Operating Procedures*, 323-1701-310.
the path is unprotected	go to the next step. Performing the next step can affect traffic.

10 Make sure the optical fiber is connected correctly on the OTR line-side Rx port at the near-end site and on the OTR line-side Tx port at the far-end site. If you are using the OMX 4CH + Fiber Manager, check both ends of the patch-cords between the OMX, LC-to-SC patch panel, and the OTR.

Note: Use a network topology diagram to determine the near-end and far-end sites.

—continued—

Procedure 16-15 (continued)
OTR—High Optical Power Warning

Step	Action
11	Use the System Manager to check the received power level on the line-side Rx port of the downstream OTR. Write down the value. Refer to Table 2-31 in *Technical Specifications*, 323-1701-180 for minimum and maximum Rx/Tx power levels. ***Note:*** You can record the power level from the Equipment—Facility window in the System Manager.

If the power level is	**Then**
above the operational threshold	go to step 14
within the operational threshold	the problem is with the OTR. Go to the next step.

Step	Action
12	Reseat the OTR. Follow Procedure 3-68 “Reseating a circuit pack” in *Provisioning and Operating Procedures,* 323-1701-310.

If	**Then**
the alarm clears	you have completed this procedure
the alarm remains	go to the next step

Step	Action
13	Replace the downstream OTR. Follow Procedure 3-5 “Replacing an OTR circuit pack” in *Maintenance and Replacement Procedures*, 323-1701-546.

If	**Then**
the alarm clears	the removed circuit pack is faulty. You have completed this procedure.
the alarm remains	the circuit pack is not the problem. Reseat the original circuit pack. Contact your next level of support.

—continued—

Procedure 16-15 (continued)
OTR—High Optical Power Warning

Step	Action
14	Use the System Manager to check the transmitting power of the corresponding upstream OTR line-side Tx port. Make sure that the transmit power level is within the operational threshold. ***Note 1:*** You can record the power level from the Equipment—Facility window in the System Manager. ***Note 2:*** The “upstream” OTR is the OTR that is originating the signal which the alarming “downstream” OTR is receiving. Use a network topology map to determine the “upstream” OTR. ***Note 3:*** Refer to Table 2-31 in *Technical Specifications*, 323-1701-180 for minimum and maximum Tx power levels.

If the transmit power level is	**Then** go to
not within the operational threshold	step 15
within the operational threshold	step 17

Step	Action
15	Reseat the OTR. Follow Procedure 3-68 “Reseating a circuit pack” in *Provisioning and Operating Procedures,* 323-1701-310.

If	**Then**
the alarm clears	you have completed this procedure
the alarm remains	go to the next step

—continued—

Procedure 16-15 (continued)
OTR—High Optical Power Warning

Step	Action
16	Replace the upstream OTR. Follow Procedure 3-5 "Replacing an OTR circuit pack" in *Maintenance and Replacement Procedures*, 323-1701-546.

If	Then
the alarm clears	the removed circuit pack is faulty. You have completed this procedure.
the alarm remains	make sure the new card's line-side Tx port is within the operational threshold and go to the next step.

17 Reseat the OTR. Follow Procedure 3-68 "Reseating a circuit pack" in *Provisioning and Operating Procedures,* 323-1701-310.

If	Then
the alarm clears	you have completed this procedure
the alarm remains	go to the next step

18 Replace the downstream OTR. Follow Procedure 3-5 "Replacing an OTR circuit pack" in *Maintenance and Replacement Procedures,* 323-1701-546.

If	Then
the alarm clears	the removed circuit pack is faulty. You have completed this procedure.
the alarm remains	the circuit pack is not the problem. Reseat the original circuit pack. Contact your next level of support.

ATTENTION

If you set a forced switch on the path, make sure you remove the switch when the procedure is completed. Follow Procedure 3-49 "Removing a manual, force, or lockout switch from a protection path" in *Provisioning and Operating Procedures*, 323-1701-310.

If you are using ALS and disabled it during this procedure, re-enable it for each site. Follow Procedure 1-43 "Enabling or disabling automatic laser shutdown" in *Provisioning and Operating Procedures*, 323-1701-310.

—continued—

Procedure 16-15 (continued)
OTR—High Optical Power Warning

Step	Action

Client side

19

If	Then
the connection is unprotected	check the connections between the subtending equipment, the SC-to-LC patch panel, and the OTR.
the connection is protected	check the connections between the subtending equipment, the Transponder Protection Tray (TPT) and the OTR.

20 Using the System Manager, record the Rx power on the client-side of the OTR. Check that the power level received is within the operational threshold. Refer to Table 2-30 for client-side specifications in *Technical Specifications*, 323-1701-180 for minimum and maximum Rx/Tx power levels.

Note: You can record the power level from the Equipment—Facility window in the System Manager.

If	**Then** go to
the Rx power is too high	the next step
the Rx power is within the operational threshold	step 25

21

CAUTION
Risk of recovery procedures affecting traffic
Disconnecting the fiber will drop traffic. If necessary, route traffic to an alternate path (on another OTR, fiber, or system).

22 Use the an optical power meter to measure the transmit power on the subtending equipment. Make sure it is working correctly and that the power of the transmitted signal is at the correct power level according to the manufacturer's specifications.

If	Then
the subtending equipment Tx laser is out of specification	repair or replace the subtending equipment. Go to the next step.
the subtending equipment Tx laser is within specification	go to step 24

—continued—

Procedure 16-15 (continued)
OTR—High Optical Power Warning

Step	Action

23

If	Then
the alarm clears	you have completed the procedure
the alarm remains	go to step 25

24 Add an optical attenuator (fixed pad) somewhere in the path between the subtending equipment Tx port and the OTR Rx port. The optical attenuator value should be sufficient to reduce the power to an acceptable power level at the OTR client-side Rx port. Refer to Table 2-30 in *Technical Specifications*, 323-1701-180 for maximum and minimum Rx/Tx power levels.

Note: For the unprotected case, Nortel recommends putting the attenuator in the LC-to-SC optical patch panel. In the protected case, put the attenuator in the Transponder Protection Tray, specifically on the port that goes directly to the OTR client-side Rx port.

If	Then
the alarm clears	you have completed the procedure
the alarm remains	go to step 24

25 Reseat the OTR. Follow Procedure 3-68 “Reseating a circuit pack” in *Provisioning and Operating Procedures,* 323-1701-310.

If	Then
the alarm clears	you have completed this procedure
the alarm remains	go to the next step

26 Replace the OTR. Follow Procedure 3-5 “Replacing an OTR circuit pack” in *Maintenance and Replacement Procedures,* 323-1701-546.

If	Then
the alarm clears	the removed circuit pack is faulty. You have completed this procedure.
the alarm remains	the circuit pack is not the problem. Reseat the original circuit pack. Contact your next level of support.

—end—

Procedure 16-16
OTR—Incompatible Optical System Identifier

This alarm is an equipment -level alarm that is raised on two OTRs in the same Optical Metro 5200 shelf.

For more information refer to Procedure 3-36 "Provisioning the optical system identifier (OSID)" in *Provisioning and Operating Procedures,* 323-1701-310.

Probable cause

This alarm becomes active in a protected connection when the optical system identifier (OSID) of the paired OTRs are different from each other.

Impact

Warning, non-service-affecting.

Requirement

Before you begin this procedure you must

- know what the correct provisioning is for the shelf and OTRs that raised the alarm
- have knowledge of your OSIDs and how they are deployed in the network

Precautions

Correct provisioning of OSIDs is a critical component in deploying intrasite fault sectionalization (IFS). If OSIDs are incorrectly assigned you will impact the raising of Band Input Failure and Shelf Input Failure alarms.

CAUTION
Risk of interfering with alarm reporting
It is essential that the OSID for all line-facing equipment is provisioned correctly for bridge sites, for hub and spoke rings, and for rings with intrasite fault sectionalization (IFS). Refer to the "Rules for provisioning OSIDs" in *Provisioning and Operating Procedures*, 323-1701-310.

Know the network topology and exercise caution when provisioning OSIDs. Incorrect OSID provisioning can generate unnecessary Incomplete Provisioning alarms, and can cause the IFS feature to operate incorrectly.

—continued—

Procedure 16-16 (continued)
OTR—Incompatible Optical System Identifier

Action

Step	Action	
1	In the Equipment—Inventory window in System Manager, verify that the OTRs share the same OSID value in the OSID column.	
2	**If**	**Then**
	the OSID values are the same	contact your next level of support
	the OSID values are different	follow Procedure 3-36 “Provisioning the optical system identifier (OSID)” in *Provisioning and Operating Procedures,* 323-1701-310 to change the OSID. Go to the next step.
3	**If**	**Then**
	the alarm clears	you have completed this procedure
	the alarm remains	contact your next level of support
		—end—

Procedure 16-17
OTR—Incomplete Provisioning

Probable cause

This alarm becomes active when

- the intrasite fault sectionalization (IFS) feature is enabled and the optical system identifier (OSID) for the OTR is unassigned
- at least one line-facing circuit pack (OCLD, OTR, MOTR, or OSC) on the shelf is assigned an OSID and the OSID of the OTR is unassigned
- two or more line facing circuit pack (OCLD/OTR/MOTR) on different shelves at the same site are in the same plane and have identical band, channel and OSID.

Impact

Minor, non-service-affecting.

CAUTION
Risk of interfering with alarm reporting
It is essential that the OSID for all line-facing equipment is provisioned correctly for bridge sites, for hub and spoke rings, and for rings with intrasite fault sectionalization (IFS). Refer to the "Rules for provisioning OSIDs" in *Provisioning and Operating Procedures*, 323-1701-310.

Know the network topology and exercise caution when provisioning OSIDs. Incorrect OSID provisioning can generate unnecessary Incomplete Provisioning alarms, and can cause the IFS feature to operate incorrectly.

Action

Step	Action
1	Refer to the "Rules for provisioning OSIDs" and the associated Precautions in Procedure 3-36 "Provisioning the optical system identifier (OSID)" in *Provisioning and Operating Procedures*, 323-1701-310.

—continued—

Procedure 16-17 (continued)
OTR—Incomplete Provisioning

Step	Action	
2	**If** the cause is	**Then**
	IFS is enabled and the OSID for the OTR is unassigned	assign an OSID to the OTR circuit pack that has an unassigned OSID. Follow Procedure 3-36 "Provisioning the optical system identifier (OSID)" in *Provisioning and Operating Procedures*, 323-1701-310. Go to the next step.
	at least one line-facing circuit pack on the shelf is assigned an OSID and the OSID of the OTR is unassigned	either unassign the OSID of the circuit pack with the assigned OSID, or assign an OSID to all line-facing circuit packs. Follow Procedure 3-36 "Provisioning the optical system identifier (OSID)" in *Provisioning and Operating Procedures*, 323-1701-310. Go to the next step.
	two or more line-facing circuit pack in different shelves at the same site are in the same plane and have identical band, channel and OSID.	Do one of the following: • assign a different OSID to each circuit pack.Follow Procedure 3-36 "Provisioning the optical system identifier (OSID)" in *Provisioning and Operating Procedures*, 323-1701-310. • keep one of the line-facing circuit packs in the system, and remove all the others. Follow Procedure 3-9 "Deleting a circuit pack or SFP from the inventory" in *Provisioning and Operating Procedures*, 323-1701-310. Go to the next step
3	**If**	**Then**
	the alarm clears	you have completed this procedure
	the alarm remains	contact your next level of support

—end—

Procedure 16-18
OTR—Inter-card Communication Failure

Probable cause

This alarm becomes active when the SP circuit pack cannot communicate with the specified OTR circuit pack.

Impact

Major, non-service-affecting.

Precautions

CAUTION
Risk of recovery procedures affecting traffic
This alarm is not service-affecting, however the recovery action can be service-affecting.

CAUTION
Risk of affecting network reliability
Make sure that all connectors are cleaned before you make the connections (or re-connections) described in this procedure. For cleaning information, see the chapter "Cleaning connectors" in *Installing Optical Metro 5200 Shelves and Components*, 323-1701-201.

—continued—

Procedure 16-18 (continued)
OTR—Inter-card Communication Failure

Action

Step	Action
1	Using the Fault—Active Alarms window in System Manger, check to see if the Inter-card Communication Failure alarm is raised by more than one circuit pack in the shelf.

If	**Then** go to
the alarm is raised by only this circuit pack	the next step
the alarm is raised on multiple circuit packs	step 5

2

If	**Then**
the path is protected	switch traffic off of the OTR. Follow Procedure 3-48 “Forcing traffic to one path on a protected channel” in *Provisioning and Operating Procedures*, 323-1701-310. Go to the next step.
the path is unprotected	go to the next step. Performing the next step may affect traffic.

3 Reseat the OTR. Follow Procedure 3-68 “Reseating a circuit pack” in *Provisioning and Operating Procedures,* 323-1701-310.

If	**Then**
the alarm clears	you have completed this procedure
the alarm remains	go to the next step

4 Replace the OTR. Refer to Procedure 3-5 “Replacing an OTR circuit pack” in *Maintenance and Replacement Procedures,* 323-1701-546.

If	**Then**
the alarm clears	the removed circuit pack is faulty. You have completed this procedure.
the alarm remains	the circuit pack is not the problem. Reseat the original circuit pack. Go to step 6.

—continued—

Procedure 16-18 (continued)
OTR—Inter-card Communication Failure

Step	Action
5	Reseat the SP. Follow Procedure 3-68 “Reseating a circuit pack” in *Provisioning and Operating Procedures,* 323-1701-310.

If	Then
the alarm clears	you have completed this procedure
the alarm remains	go to the next step

Step	Action
6	Replace the SP. Refer to Procedure 3-13 “Replacing an SP circuit pack” in *Maintenance and Replacement Procedures* 323-1701-546.

If	Then
the alarm clears	the removed circuit pack is faulty. You have completed this procedure.
the alarm remains	the circuit pack is not the problem. Reseat the original circuit pack. Contact your next level of support.

ATTENTION

If you set a forced switch on the path, make sure you remove the switch when the procedure is completed. Follow Procedure 3-49 “Removing a manual, force, or lockout switch from a protection path” in *Provisioning and Operating Procedures*, 323-1701-310.

—end—

Procedure 16-19
OTR—Invalid Provisioning

Probable cause

This alarm becomes active when two or more line facing circuit packs (OCLD/OTR/MOTR) on different shelves at the same site are in the same plane and have the identical band, channel and OSID.

This alarm only becomes active when the site contains an OSC circuit pack with the same OSID as this circuit pack and all shelves at the site are connected together via the Ethernet-2 LAN.

Impact

Minor, non-service-affecting.

CAUTION
Risk of interfering with alarm reporting
It is essential that the OSID for all line-facing equipment is provisioned correctly for bridge sites, for hub and spoke rings, and for rings with intrasite fault sectionalization (IFS). Refer to the "Rules for provisioning OSIDs" in *Provisioning and Operating Procedures*, 323-1701-310.

Know the network topology and exercise caution when provisioning OSIDs. Incorrect OSID provisioning can generate unnecessary Incomplete Provisioning alarms, and can cause the IFS feature to operate incorrectly.

Action

Step	Action
1	In the System Manager, query the circuit pack inventory. Double-click on the alarmed OTR circuit pack. *The Optical Metro Inventory window opens.*
2	In the Provisioning Data section of the Optical Metro Inventory window, determine if the OTR band, channel and OSID fields are provisioned.

If	**Then** go to
the band, the channel and the OSID fields are duplicate and the circuit pack is required	step 3
the circuit pack is not required	step 5

—continued—

Procedure 16-19 (continued)
OTR—Invalid Provisioning

Step	Action
3	Fix the provisioning problem. Follow Procedure 3-2 “Manually provisioning a circuit pack or SFP” and Procedure 3-36 “Provisioning the optical system identifier (OSID)” in *Provisioning and Operating Procedures*, 323-1701-310.
4	Go to step 9.
5	Delete the facility of the circuit pack. Follow Procedure 3-14 “Deleting a circuit pack or SFP facility” in *Provisioning and Operating Procedures*, 323-1701-310.
6	Delete the equipment of the circuit pack. Follow Procedure 3-9 “Deleting a circuit pack or SFP from the inventory” in *Provisioning and Operating Procedures*, 323-1701-310.
7	Unseat the circuit pack from the shelf.

8

If the cause is	**Then**
two or more line-facing circuit pack in different shelves at the same site are in the same plane and have identical band, channel and OSID.	Do one of the following: • assign a different OSID to each circuit pack. Follow Procedure 3-36 “Provisioning the optical system identifier (OSID)” in *Provisioning and Operating Procedures*, 323-1701-310. • keep one of the line-facing circuit packs in the system, and remove all the others. Follow Procedure 3-9 “Deleting a circuit pack or SFP from the inventory” in *Provisioning and Operating Procedures*, 323-1701-310. Go to the next step

9

If	**Then**
the alarm clears	you have completed this procedure
the alarm remains	contact your next level of support

—end—

Procedure 16-20
OTR—Invalid Signal (optical receiver)

This alarm is raised on the line-side interface of the OTR 2.5 Gbit/s only.

Probable cause

This alarm becomes active when the optical signal received has faults or is invalid. One of the following conditions exists:

- channel assignments for the entire connection have not been created, or have been deleted
- an optical fiber connection is degraded
- the optical fiber from the OTR 2.5 Gbit/s Flex is connected to a channel that has not been provisioned
- the connector is dirty on the receiving OTR 2.5 Gbit/s Flex or on the corresponding upstream OTR 2.5 Gbit/s Flex
- the line-side receiving OTR 2.5 Gbit/s Flex is defective
- the line-side transmitting OTR 2.5 Gbit/s Flex is defective
- the connection provisioning is inconsistent along the path
- an upstream OFA, APBE, or ECT has failed or the ring is not equalized properly

—continued—

Procedure 16-20 (continued)
OTR—Invalid Signal (optical receiver)

Impact

Table 16-7 lists the impact that this alarm has under different conditions.

Table 16-7
OTR Rx Invalid Signal alarm impact

Alarm	Conditions	Severity	Impact
Rx Invalid Signal	If any of the following conditions exist: • the path assigned to the OTR 2.5 Gbit/s Flex is unprotected • the path assigned to the OTR is protected and the matching OTR has an alarm condition	Critical	Service-affecting
	If any of the following conditions exist: • there is no channel assignment, but the OTR 2.5 Gbit/s Flex line-side facility is in-service, and the OTR is carrying an invalid signal • the path assigned is protected and the matching OTR 2.5 Gbit/s Flex is operating correctly	Minor	Non-service-affecting

—continued—

Procedure 16-20 (continued)
OTR—Invalid Signal (optical receiver)

Precautions

CAUTION
Risk of recovery procedures affecting traffic
This alarm may not be service-affecting, however the recovery action can be service-affecting if the path is not protected.

CAUTION
Risk of affecting network reliability
Make sure that all connectors are cleaned before you make the connections (or re-connections) described in this procedure. For cleaning information, see the chapter "Cleaning connectors" in *Installing Optical Metro 5200 Shelves and Components*, 323-1701-201.

Action

Step	Action
1	Make sure the optical fiber from the OMX is connected to the correct OTR 2.5 Gbit/s Flex channel.
2	Make sure the connection provisioning data is complete, consistent and correct for the entire path.
3	Record the received power level on the OTR. Make sure that the received power level is within the operational threshold. Refer to Table 2-23 in *Technical Specifications*, 323-1701-180. ***Note:*** You can record the power level from the Equipment—Facility window in the System Manager.
4	Record the transmitted power level on the corresponding upstream OTR 2.5 Gbit/s Flex. Make sure that the transmitted power level is within the operational threshold. ***Note:*** You can record the power level from the Equipment—Facility window in the System Manager.
5	**If** / **Then** the path is protected — switch traffic off of the OTR. Follow Procedure 3-44 "Removing traffic from an OTR circuit pack" in *Provisioning and Operating Procedures*, 323-1701-310. the path is unprotected — go to the next step. Performing the next step may affect traffic.

—continued—

Procedure 16-20 (continued)
OTR—Invalid Signal (optical receiver)

Step	Action
6	Remove traffic from the OTR 2.5 Gbit/s Flex. Follow Procedure 3-44 "Removing traffic from an OTR circuit pack" in *Provisioning and Operating Procedures*, 323-1701-310.
7	Using the System Manager, take the facilities and the OTR 2.5 Gbit/s Flex out-of-service. Follow Procedure 3-13 "Taking a circuit pack facility or SFP facility out-of-service" and Procedure 3-8 "Taking a circuit pack or SFP out-of-service" in *Provisioning and Operating Procedures,* 323-1701-310.

CAUTION
Risk of loss of traffic across multiple bands
Do not clean any optical fibers on the optical fiber plant, or on connections to the OMX. This affects traffic over multiple bands. Clean only the fiber connections on the specified OTR 2.5 Gbit/s Flex.

8 Use the proper cleaning kit to clean all the connectors. For information on cleaning, see "Cleaning connectors" in *Installing Optical Metro 5200 Shelves and Components,* 323-1701-201.

— Clean each connector separately.

— Record the operating power level after you clean each connector.

9 Reseat the receiving OTR 2.5 Gbit/s Flex, and put the OTR back in-service. Follow Procedure 3-7 "Putting a circuit pack or SFP in-service" in *Provisioning and Operating Procedures,* 323-1701-310.

If	Then
the alarm clears	you have completed this procedure
the alarm remains	go to the next step

10 Replace the receiving OTR 2.5 Gbit/s Flex. Follow Procedure 3-5 "Replacing an OTR circuit pack" in *Maintenance and Replacement Procedures*, 323-1701-546.

If	Then
the alarm clears	the removed circuit pack is faulty. You have completed this procedure.
the alarm remains	the circuit pack is not the problem. Reseat the original circuit pack. Go to the next step.

11 Repeat steps 6 to 10 for the transmitting OTR 2.5 Gbit/s Flex.

—continued—

Procedure 16-20 (continued)
OTR—Invalid Signal (optical receiver)

Step	Action	
12	**If**	**Then**
	the alarm clears	you have completed this procedure
	the alarm remains	contact your next level of support

ATTENTION
If you set a forced switch on the path, make sure you remove the switch when the procedure is completed. Follow Procedure 3-49 "Removing a manual, force, or lockout switch from a protection path" in *Provisioning and Operating Procedures*, 323-1701-310.

—end—

Procedure 16-21
OTR—Local Fault

This alarm is raised on the Rx client-side interface of the OTR 10 Gbit/s Enhanced circuit pack and only when the Rx client-side interface is in LAN Phy mode.

Probable cause

This alarm indicates that there is a problem at the transmitting subtending equipment or facility.

Impact

Warning, non-service-affecting.

Precautions

CAUTION
Risk of affecting network reliability
Make sure that all connectors are cleaned before you make the connections (or re-connections) described in this procedure. For cleaning information, see the chapter "Cleaning connectors" in *Installing Optical Metro 5200 Shelves and Components*, 323-1701-201.

—continued—

Procedure 16-21 (continued)
OTR—Local Fault

Action

Step	Action
1	Make sure the transmitting subtending equipment is functioning correctly and transmitting a valid signal (correct bit rate and protocol).
2	Use the an optical power meter to measure the transmit power on the subtending equipment. Make sure it is working correctly and that the power of the transmitted signal is at the correct power level according to the manufacturer's specifications.

If	Then
the subtending equipment Tx laser is out of specification	repair or replace the subtending equipment. Go to the next step.
the subtending equipment Tx laser is within specification	go to step 4

3

If	Then
the alarm clears	you have completed this procedure
the alarm remains	go to the next step

4 Reseat the OTR. Follow Procedure 3-68 "Reseating a circuit pack" in *Provisioning and Operating Procedures,* 323-1701-310.

If	Then
the alarm clears	you have completed this procedure
the alarm remains	go to the next step

5 Replace the OTR. Follow Procedure 3-5 "Replacing an OTR circuit pack" in *Maintenance and Replacement Procedures,* 323-1701-546.

If	Then
the alarm clears	the removed circuit pack is faulty. You have completed this procedure.
the alarm remains	the circuit pack is not the problem. Reseat the original circuit pack. Contact your next level of support.

—end—

Procedure 16-22
OTR—Loss of Frame

This alarm can be raised on the client-side and line-side interfaces.

Probable cause

This alarm becomes active when one of the following conditions exists:

- the OTR circuit pack is unable to detect the SONET frame (client facility) or Wrapper Frame (line facility) in the signal from the subtending customer or remote OTR equipment.

Impact

Table 16-8 lists the impact that the alarm has under different conditions.

Table 16-8
OTR Loss of Frame alarm impact

Alarm	Conditions	Severity	Impact
Loss of Frame	The alarm reported on the line-side is critical under the following conditions: • there are channel assignments on the OTR, and the OTR is in-service • the path assigned to the OTR is unprotected or the path assigned to the OTR is protected and the matching OTR has an alarm condition	Critical	Service-affecting
	The alarm reported on the line-side is minor under the following conditions: • if there are no channel assignments on the OTR • if the path assigned is protected and the matching OTR is operating correctly	Minor	Non-service-affecting

Conditions for client-side alarm

One the client side, the alarm is always Critical if there are channel assignments on the OTR and the OTR is in-service.

—continued—

Procedure 16-22 (continued)
OTR—Loss of Frame

Precautions

CAUTION
Risk of recovery procedures affecting traffic
This alarm may not be service-affecting, however the recovery action can be service-affecting.

CAUTION
Risk of affecting network reliability
Make sure that all connectors are cleaned before you make the connections (or re-connections) described in this procedure. For cleaning information, see the chapter "Cleaning connectors" in *Installing Optical Metro 5200 Shelves and Components*, 323-1701-201.

Action

Step	Action
1	Make sure the provisioning of the OTR circuit pack or facility is consistent with the subtending equipment (bit-rate and protocol).
2	Make sure the subtending equipment is working properly and providing an error-free supported signal.
3	Check the entry in the Port column on the Fault–Active Alarms window to determine where the alarm is raised.

If the entry is	**Then**
1–CS	the alarm is raised on the client side. Go to step 4.
2–LS	the alarm is raised on the line side. Go to step 18.

Client side

4	**If**	**Then** go to
	the path is protected	step 5
	the path is unprotected	step 7

—continued—

Procedure 16-22 (continued)
OTR—Loss of Frame

Step	Action	
5	**If** the alarm is raised	**Then**
	on one OTR	check the connections between the Transponder Protection Tray and the OTR Client side Rx. Go to next step.
	on two OTRs of the same band and channel	check the connections between subtending equipment Tx and the Transponder Protection Tray Rx. Go to next step.
6	**If**	**Then**
	the alarm clears	you have completed this procedure
	the alarm remains	go to the next step
7	Make sure the optical fiber is correctly connected at both ends and that there is no problem with the optical fiber plant between the OTR client-side Rx and the Tx of the subtending equipment.	
8	Using the System Manager, or a power meter, record the Rx power on the client-side OTR Rx port. Check that the power level received is within the operational threshold. Refer to Table 2-30 for client-side specifications in *Technical Specifications*, 323-1701-180 for minimum and maximum Rx/Tx power levels. Write down the Rx power. ***Note:*** You can record the power level from the Equipment—Facility window in the System Manager.	
9	**If** the power level is	**Then** go to
	not within the operational threshold	the next step
	within the operational threshold	step 16

—continued—

Procedure 16-22 (continued)
OTR—Loss of Frame

Step	Action
10	Make sure the transmitting subtending equipment is functioning correctly and transmitting a valid signal (correct bit rate and protocol).
11	Use the an optical power meter to measure the transmit power on the subtending equipment. Make sure it is working correctly and that the power of the transmitted signal is at the correct power level according to the manufacturer's specifications.

If	Then
the subtending equipment Tx laser is out of specification	repair or replace the subtending equipment. Go to the next step.
the subtending equipment Tx laser is within specification	go to step 13

12	If	Then
	the alarm clears	you have completed this procedure
	the alarm remains	go to the next step

13	If	Then
	there is a VOA attached to a the fiber between the OTR and the subtending equipment	re-adjust, check for proper functionality, and, if necessary, replace the VOA. Go to the next step.
	there is no VOA attached to a fiber between the OTR and the subtending equipment	go to step 15

14	If	Then
	the alarm clears	you have completed this procedure
	the alarm remains	go to the next step

—continued—

Procedure 16-22 (continued)
OTR—Loss of Frame

Step	Action
15	Use the proper cleaning kit to clean all the connectors between the subtending equipment Tx port and the OTR Rx port, and visa-versa. For information on cleaning, see "Cleaning connectors" in *Installing Optical Metro 5200 Shelves and Components,* 323-1701-201. — Clean each connector separately. — Record the operating power level after you clean each connector and compare it to the value you wrote down in step 8, this will allow you to see if there is any improvement to the Rx power. — Make sure there is no problem with the optical fiber plant between the OTR and the subtending equipment.

If	Then
the client side is fibered in an unprotected configuration with a single OTR	clean every connector between the subtending equipment's Tx port, the SC-to-LC patch panel, and the OTR client-side Rx port. For information on cleaning, see "Cleaning connectors" in *Installing Optical Metro 5200 Shelves and Components,* 323-1701-201.
the client side is fibered in a protected configuration with two OTRs	clean every connector between the subtending equipment's Tx port, the Transponder Protection Tray, and the OTR client-side Rx port. For information on cleaning, see "Cleaning connectors" in *Installing Optical Metro 5200 Shelves and Components,* 323-1701-201.

If	Then
the alarm clears	you have completed this procedure
the alarm remains	go to the next step

16	Reseat the OTR. Follow Procedure 3-68 "Reseating a circuit pack" in *Provisioning and Operating Procedures,* 323-1701-310.

If	Then
the alarm clears	you have completed this procedure
the alarm remains	go to the next step

—continued—

Procedure 16-22 (continued)
OTR—Loss of Frame

Step	Action
17	Replace the OTR. Follow Procedure 3-5 “Replacing an OTR circuit pack” in *Maintenance and Replacement Procedures,* 323-1701-546.

If	Then
the alarm clears	the removed circuit pack is faulty. You have completed this procedure.
the alarm remains	the circuit pack is not the problem. Reseat the original circuit pack. Contact your next level of support.

Line side

18	Check the corresponding upstream OTR or, if applicable, Optical Fiber Amplifiers (OFA) for failures or alarms. Use a network topology diagram to determine the upstream OTRs and OFAs. Troubleshoot these alarms/failures before proceeding.

—continued—

Procedure 16-22 (continued)
OTR—Loss of Frame

Step	Action
19	At the downstream shelf, use the System Manager to check if you are receiving OTR—Loss of Frame alarms on all (or most) OTRs in the same east/west plane, or just on a single OTR. ***Note:*** On the Optical Metro 5200 shelf, the east plane is defined as slots11-18, the west plane is defined as slots 1-8. On the Optical Metro 5100 shelf, the east plane is defined as slots 3 and 4, while the west plane is defined as slots 1 and 2.

If	**Then** go to
the alarm appears on the only OTR in the east/west plane	step 20
the alarm appears on all (or most) OTRs in the same east/west plane	step 22
the alarm appears on one of multiple OTRs in the same east/west plane	step 24

Step	If	Then
20	there are amplifiers between the upstream and downstream OTR	there is a problem at the amplifier site, the ring requires re-equalization, or both. Contact your next level of support to troubleshoot. If troubleshooting does not clear the alarm, go to step 24.
	there are no amplifiers between the upstream and downstream OTR	there is a problem with the line fiber between the sites, go to the next step

—continued—

Procedure 16-22 (continued)
OTR—Loss of Frame

Step	Action
21	Investigate the line fiber between the upstream OTR and the downstream OTR for loss or degrade.

CAUTION
Risk of loss of traffic across multiple wavelengths in the band
Disturbing the line fiber affects traffic on the entire band/direction. If the traffic is protected, follow Procedure 3-48 "Forcing traffic to one path on a protected channel" in *Provisioning and Operating Procedures*, 323-1701-310 to switch traffic for the OTR in the east/west plane before proceeding. If the traffic is not protected, you will drop traffic.

CAUTION
DISABLE AUTOMATIC LASER SHUTDOWN
If Automatic Laser Shutdown (ALS) is enabled, disable ALS for all shelves that will be affected by this maintenance activity. Use a network topology diagram and channel listing to determine the upstream and downstream sites that will be affected when the ring is opened. If you do not know if ALS is enabled or not, assume it is enabled. Follow Procedure 1-43 "Enabling or disabling automatic laser shutdown" in *Provisioning and Operating Procedures*, 323-1701-310 to disable ALS.

- Using a power meter, a cleaning kit, and a network topology diagram, start at the upstream site and clean every connector on the path until you reach the downstream site. Measure the power with the power meter after each cleaning to check for improvements in the line power. For information on cleaning, see "Cleaning connectors" in *Installing Optical Metro 5200 Shelves and Components,* 323-1701-201.

—continued—

Procedure 16-22 (continued)
OTR—Loss of Frame

Step	Action
	• Also, check for damaged, kinked, tightly bent fiber, or anything else that might impede the optical signal. This includes optical filters such as OMXs or C/L Splitter/Couplers. Replace any damaged fibers or filters. If you find a faulty component or filter refer to Chapter 2 "Replacing shelf components" in *Maintenance and Replacement Procedures* in 323-1701-546.

If	Then
the alarm clears	you have completed this procedure
the alarm remains	go to step 24

22	If	Then
	there are amplifiers between the upstream and downstream OTRs	there is a problem at the amplifier site, the ring requires re-equalization, or both. Contact your next level of support.
	there are no amplifiers between the upstream and downstream OTRs	there is a problem with the line fiber between the sites, go to the next step

—continued—

Procedure 16-22 (continued)
OTR—Loss of Frame

Step	Action
23	The line fiber between the upstream OTRs and the downstream OTRs must be investigated for loss or degrade.

CAUTION
Risk of loss of traffic across multiple wavelengths in the band
Disturbing the line fiber affects traffic on the entire band/direction. If the traffic is protected, follow Procedure 3-48 "Forcing traffic to one path on a protected channel" in *Provisioning and Operating Procedures*, 323-1701-310 to switch traffic for every OTR in the east/west plane before proceeding. If the traffic is not protected, you will drop traffic.

CAUTION
DISABLE AUTOMATIC LASER SHUTDOWN
If Automatic Laser Shutdown (ALS) is enabled, disable ALS for all shelves that will be affected by this maintenance activity. Use a network topology diagram and channel listing to determine the upstream and downstream sites that will be affected when the ring is opened. If you do not know if ALS is enabled or not, assume it is enabled. Follow Procedure 1-43 "Enabling or disabling automatic laser shutdown" in *Provisioning and Operating Procedures*, 323-1701-310 to disable ALS.

- Using a power meter, a cleaning kit, and a network topology diagram, start at the upstream site and clean every connector on the path until you reach the downstream site. Measure the power with the power meter after each cleaning to check for improvements in the line power. For information on cleaning, see "Cleaning connectors" in *Installing Optical Metro 5200 Shelves and Components,* 323-1701-201.

—continued—

Procedure 16-22 (continued)
OTR—Loss of Frame

Step	Action

- Also, check for damaged, kinked, tightly bent fiber, or anything else that might impede the optical signal. This includes optical filters such as OMXs or C/L Splitter/Couplers. Replace any damaged fibers or filters. If you find a faulty component or filter refer to Chapter 2 "Replacing shelf components" in *Maintenance and Replacement Procedures* in 323-1701-546.

If	Then
the alarm clears	you have completed this procedure
the alarm remains	contact your next level of support

24

If	Then
the path is protected	switch traffic off of the OTR. Follow Procedure 3-48 "Forcing traffic to one path on a protected channel" in *Provisioning and Operating Procedures*, 323-1701-310.
the path is unprotected	go to the next step. Performing the next step may affect traffic.

25 If Automatic Laser Shutdown (ALS) is enabled, disable ALS for both the near-end and far-end shelves which contain the alarming OTR and its corresponding upstream OTR. Use a network topology diagram and channel listing to determine the near-end and far-end sites. If you do not know if ALS is enabled or not, assume it is enabled. Follow Procedure 1-43 "Enabling or disabling automatic laser shutdown" in *Provisioning and Operating Procedures*, 323-1701-310 to disable ALS.

26 Make sure the optical fiber is connected correctly on the OTR line-side Rx port at the near-end site and on the OTR line-side Tx port at the far-end site. If you are using the OMX 4CH + Fiber Manager, check both ends of the patch-cords between the OMX, LC-to-SC patch panel, and the OTR.

Note: Use a network topology diagram to determine the near-end and far-end sites.

If	Then
the alarm clears	you have completed the procedure
the alarm remains	go to the next step

—continued—

Procedure 16-22 (continued)
OTR—Loss of Frame

Step	Action
27	Check to see if the OTR line-side Rx power level is within the operational threshold and write down the value. Refer to Table 2-31 in *Technical Specifications*, 323-1701-180 for minimum and maximum Rx/Tx power levels for the line-side specifications. ***Note:*** Record the received power level on the OTR. You can record the power level from the Equipment—Facility window in the System Manager.
28	Check the transmitted power level on the corresponding upstream OTR. Check to see if the transmitted power level is within the operational threshold. Refer to Table 2-31 in *Technical Specifications*, 323-1701-180 for minimum and maximum Rx/Tx power levels of the line-side optics. ***Note 1:*** You can record the power level from the Equipment—Facility window in the System Manager. ***Note 2:*** Use a network topology diagram to determine the upstream OTR.

If the transmit power level is	**Then** go to
not within the operational threshold	the next step
within the operational threshold	step 31

Step	Action
29	Replace the upstream OTR. Follow Procedure 3-5 “Replacing an OTR circuit pack” in *Maintenance and Replacement Procedures*, 323-1701-546.

If	**Then**
the alarm clears	the removed circuit pack is faulty. You have completed this procedure.
the alarm remains (and the new OTR is within operational specifications)	the circuit pack is not the entire problem. Go to the next step.

Step	Action
30	Reseat the near-end OTR. Follow Procedure 3-68 “Reseating a circuit pack” in *Provisioning and Operating Procedures,* 323-1701-310.

If	**Then**
the alarm clears	you have completed this procedure
the alarm remains	go to the next step

—continued—

Procedure 16-22 (continued)
OTR—Loss of Frame

Step	Action
31	Use the proper cleaning kit to clean all the connectors attached to the receiving (near-end) OTR line-side Rx port and to the corresponding line-side Tx port on the transmitting (far-end) OTR. For information on cleaning, see "Cleaning connectors" in *Installing Optical Metro 5200 Shelves and Components,* 323-1701-201. Use a network topology diagram to determine the transmitting (far-end) OTR. ***Note 1:*** If you are using the OMX 4CH + Fiber Manager, clean both ends of the patch-cord between the OMX and the line-side OTR port. ***Note 2:*** Clean between the OTR, the SC-to-LC patch panel, and the OMX — Clean each connector separately. — Record the operating power level after you clean each connector and compare it to the value you wrote down in step 27, this will allow you to see if there is any improvement to the Rx power.

If	Then
the alarm clears	you have completed this procedure
the alarm remains	go to the next step

CAUTION
Risk of loss of traffic across multiple bands
Do not clean any optical fibers on the optical fiber plant, or on connections to the OMX. This affects traffic over multiple bands. Clean only the connections at the specified OTR circuit packs.

Step	Action
32	Replace the near-end OTR. Follow Procedure 3-5 "Replacing an OTR circuit pack" in *Maintenance and Replacement Procedures,* 323-1701-546.

If	Then
the alarm clears	the removed circuit pack is faulty. You have completed this procedure.
the alarm remains	the circuit pack is not the problem. Reseat the original circuit pack. Go to the next step.

Step	Action
33	Repeat step 30 to step 32 for the far-end site.

—continued—

Procedure 16-22 (continued)
OTR—Loss of Frame

Step	Action
34	Contact your next level of support.

ATTENTION

If you set a forced switch on the path, make sure you remove the switch when the procedure is completed. Follow Procedure 3-49 "Removing a manual, force, or lockout switch from a protection path" in *Provisioning and Operating Procedures*, 323-1701-310.

If you are using ALS and disabled it during this procedure, re-enable it for each site. Follow Procedure 1-43 "Enabling or disabling automatic laser shutdown" in *Provisioning and Operating Procedures*, 323-1701-310.

—end—

Procedure 16-23
OTR—Loss of Lock

This alarm is raised on the client-side interface only.

Probable cause

This alarm becomes active when the OTR cannot lock on to the input data stream from its optical input signal. One of the following conditions exists:

- there is a problem with the Transponder Protection Tray
- an optical fiber connection is degraded
- an optical fiber is bent or coiled too tightly
- the connector is dirty at the receiving OTR or at the transmitting circuit pack
- an optical patch cord is damaged
- the receiving OTR is defective
- the transmitting subtending equipment is defective
- the optical fiber is the wrong type
- the wrong subtending equipment is connected to the client-side, or the client-side is provisioned wrong
- if there is a miniature VOA on the fiber to attenuate the signal, it may not be operating correctly

  Note: If you are using the OTR 10 Gbit/s Enhanced circuit pack, this alarm may also be raised if there is a protocol mismatch in the channel assignments for the near-end and far-end connections.

Impact

On the client-side, the alarm is always critical, service affecting if there are channel assignments on the OTR and the OTR is in-service.

—continued—

Procedure 16-23 (continued)
OTR—Loss of Lock

Precautions

CAUTION
Risk of recovery procedures affecting traffic
This alarm may not be service-affecting, however the recovery action can be service-affecting.

CAUTION
Risk of affecting network reliability
Make sure that all connectors are cleaned before you make the connections (or re-connections) described in this procedure. For cleaning information, see the chapter "Cleaning connectors" in *Installing Optical Metro 5200 Shelves and Components*, 323-1701-201.

Action

Step	Action	
1	**If**	**Then** go to
	the path is protected	step 2
	the path is unprotected	step 4
2	**If** the alarm is raised	**Then**
	on one OTR	check the connections between the Transponder Protection Tray and the OTR Client side Rx. Go to next step.
	on two OTRs of the same band and channel	check the connections between subtending equipment Tx and the Transponder Protection Tray Rx. Go to next step.
3	**If**	**Then**
	the alarm clears	you have completed this procedure
	the alarm remains	go to the next step
4	Make sure the provisioned connection type and bit rate are correct.	

—continued—

Procedure 16-23 (continued)
OTR—Loss of Lock

Step	Action
5	If you are using the OTR 10 Gbit/s Enhanced circuit pack, make sure that there is no protocol mismatch in the channel assignments for the near-end and far-end connections. For a list of supported protocols for the OTR 10 Gbit/s Enhanced circuit pack, see Table 2-33 in *Technical Specifications*, 323-1701-180.
6	Make sure you are using the correct type of optical fiber.
7	Make sure the optical fiber is connected correctly on the OTR client-side Rx port and the subtending equipment's Tx port.
8	Make sure the OTR circuit pack is the correct type.
9	Measure the received power level at the client-side Rx port of the affected OTR. Check to see if the power level is within the operational threshold. Write down the value. Refer to Table 2-30 for client-side specifications in *Technical Specifications*, 323-1701-180 for minimum and maximum Rx/Tx power levels ***Note:*** You can record the power level from the Equipment—Facility window in the System Manager.
10	**If** the power level is / **Then** go to not within the operational threshold / the next step within the operational threshold / step 17
11	Make sure the transmitting subtending equipment is functioning correctly and transmitting a valid signal (correct bit rate and protocol).

—continued—

Procedure 16-23 (continued)
OTR—Loss of Lock

Step	Action
12	Use the an optical power meter to measure the transmit power on the subtending equipment. Make sure it is working correctly and that the power of the transmitted signal is at the correct power level according to the manufacturer's specifications.

If	Then
the subtending equipment Tx laser is out of specification	repair or replace the subtending equipment. Go to the next step.
the subtending equipment Tx laser is within specification	go to step 14

13	If	Then
	the alarm clears	you have completed this procedure
	the alarm remains	go to the next step

14	If	Then
	there is a VOA attached to the fiber between the OTR and the subtending equipment	re-adjust, check for proper functionality, and, if necessary, replace the VOA. Go to the next step.
	there is no VOA attached to a fiber between the OTR and the subtending equipment	go to step 16

—continued—

Procedure 16-23 (continued)
OTR—Loss of Lock

Step	Action

15

If	Then
the alarm clears	you have completed this procedure
the alarm remains	go to the next step

16 Use the proper cleaning kit to clean all the connectors between the subtending equipment Tx port and the OTR Rx port, and visa-versa. For information on cleaning, see "Cleaning connectors" in *Installing Optical Metro 5200 Shelves and Components,* 323-1701-201.

— Clean each connector separately.

— Record the operating power level after you clean each connector and compare it to the value you wrote down in step 9, this will allow you to see if there is any improvement to the Rx power.

— Make sure there is no problem with the optical fiber plant between the OTR and the subtending equipment.

If	Then
the client side is fibered in an unprotected configuration with a single OTR	clean every connector between the subtending equipment's Tx port, the SC-to-LC patch panel, and the OTR client-side Rx port. For information on cleaning, see "Cleaning connectors" in *Installing Optical Metro 5200 Shelves and Components,* 323-1701-201.
the client side is fibered in a protected configuration with two OTRs	clean every connector between the subtending equipment's Tx port, the Transponder Protection Tray, and the OTR client-side Rx port. For information on cleaning, see "Cleaning connectors" in *Installing Optical Metro 5200 Shelves and Components,* 323-1701-201.

If	Then
the alarm clears	you have completed this procedure
the alarm remains	go to the next step

—continued—

Procedure 16-23 (continued)
OTR—Loss of Lock

Step	Action
17	Reseat the OTR. Follow Procedure 3-68 “Reseating a circuit pack” in *Provisioning and Operating Procedures,* 323-1701-310.

If	Then
the alarm clears	you have completed this procedure
the alarm remains	go to the next step

Step	Action
18	Replace the OTR. Follow Procedure 3-5 “Replacing an OTR circuit pack” in *Maintenance and Replacement Procedures,* 323-1701-546.

If	Then
the alarm clears	the removed circuit pack is faulty. You have completed this procedure.
the alarm remains	the circuit pack is not the problem. Reseat the original circuit pack. Contact your next level of support.

—end—

Procedure 16-24
OTR—Loss of Signal

This alarm can be raised on the client-side and line-side interfaces.

Probable cause

This alarm becomes active when the OTR is not detecting an input signal. One of the following conditions exists:

- an optical fiber is cut
- the optical fiber is the wrong type
- an optical fiber is bent or coiled too tightly
- the received optical power is lower than the Rx Fail Threshold of the Rx Power Low parameter
- low optical power
- complete loss of optical power
- detection of a SONET loss of signal
- the connector is dirty at the receiving OTR or on the transmitting circuit pack
- an optical patch cord is damaged
- the receiving OTR is defective
- the transmitting subtending equipment is defective
- the subtending equipment is not connected
- the connected subtending equipment is not transmitting
- if there is a miniature VOA on the fiber to attenuate the signal, it may not be operating correctly
- an upstream Optical Fiber Amplifier (OFA) is defective, not equalized properly, and/or is in alarm (line-side only)
- there is a problem with the Transponder Protection Tray

Impact

Table 16-9 on page 16-97 lists the impact that the alarm has under different conditions.

—continued—

Procedure 16-24 (continued)
OTR—Loss of Signal

Table 16-9
OTR Loss of Signal alarm impact

Alarm	Conditions	Severity	Impact
Conditions for line-side alarm			
Loss of Signal	The alarm reported on the line side is critical under the following conditions: • there are channel assignments on the OTR, and the OTR is in-service • the path assigned to the OTR is unprotected or the path assigned to the OTR is protected and the matching OTR has an alarm condition	Critical	Service-affecting
	The alarm reported on the line-side is major under the following conditions: • if there are no channel assignments on the OTR • the path assigned is protected and the matching OTR is operating correctly	Major	Non-service-affecting
Conditions for client-side alarm			
Loss of Signal	The alarm reported on the client-side is critical when there are channel assignments on the OTR and the OTR is in-service.	Critical	Service-affecting
	The alarm reported on the client-side is major if there are no channel assignments on the OTR.	Major	Non-service-affecting

Precautions

CAUTION
Risk of recovery procedures affecting traffic
This alarm may not be service-affecting however the recovery action can be service-affecting.

—continued—

Procedure 16-24 (continued)
OTR—Loss of Signal

Precautions

ATTENTION

If a fiber break occurs and is being repaired when automatic laser shutdown (ALS) or automatic laser recovery (ALR) is active on a fiber, there are impacts on the behavior of the alarms in the system. If you use light to test the broken fiber (with a light source or an optical time domain reflectometer (OTDR)), you clear the ALS alarms. This is because the shelf detects light and clears the Loss of Signal (LOS) condition. As a result, the shelf and the remote shelf power up the laser (depending on whether both Tx and Rx fibers are cut or only one of them is cut). If a Remote Automatic Laser Shutdown alarm is raised on the shelf when the light is removed, the alarm is replaced by an LOS alarm.

If all the channels impacted by the fiber break detect light when the laser is powered up, the Automatic Laser Shutdown alarm is cleared This is an expected behavior because a shelf cannot distinguish between a light source from an optical test set or a light source from a remote shelf.

CAUTION
Risk of affecting network reliability
Make sure that all connectors are cleaned before you make the connections (or re-connections) described in this procedure. For cleaning information, see the chapter "Cleaning connectors" in *Installing Optical Metro 5200 Shelves and Components*, 323-1701-201.

Action

Step	Action
1	Check the entry in the Port column on the Fault–Active Alarms window to determine where the alarm is raised.

If the entry is	**Then**
1–CS	the alarm is raised on the client side. Go to step 2.
2–LS	the alarm is raised on the line side. Go to step 19.

—continued—

Procedure 16-24 (continued)
OTR—Loss of Signal

Step	Action

Client side

2

If	**Then** go to
the path is protected	step 3
the path is unprotected	step 5

3

If the alarm is raised	**Then**
on one OTR	check the connections between the Transponder Protection Tray and the OTR Client side Rx.
on two OTRs of the same band and channel	check the connections between subtending equipment Tx and the Transponder Protection Tray Rx. Go to step 8.

4

If	**Then**
the alarm clears	you have completed this procedure
the alarm remains	go to the next step

5 Make sure the optical fiber is correctly connected at both ends and that there is no problem with the optical fiber plant between the OTR client-side Rx and the Tx of the subtending equipment.

6 Make sure the transmitting subtending equipment is functioning correctly and transmitting a valid signal.

If	**Then**
the transmitting subtending equipment is functioning correctly and transmitting a valid signal.	go to the next step
the transmitting subtending equipment is not functioning correctly and transmitting a valid signal.	follow the applicable trouble clearing procedures for the subtending equipment

CAUTION
Risk of recovery procedures affecting traffic
Disconnecting the fiber will drop traffic. If necessary, route traffic to an alternate path (on another OTR, fiber, or system).

—continued—

Procedure 16-24 (continued)
OTR—Loss of Signal

Step	Action
7	Use an optical power meter to measure the transmit power on the subtending equipment. Make sure it is working correctly and that the power of the transmitted signal is at the correct power level according to the manufacturer's specifications.

If	Then
the subtending equipment Tx laser is out of specification	repair or replace the subtending equipment. If the alarm clears, you have finished this procedure. If the alarm remains, go to the next step.
the subtending equipment Tx laser is within specification	go to the next step

8	Use an optical power meter to measure the Rx power at the input to the Transponder Protection Tray. Write down the value.
9	Use the System Manager to measure the received power level at the client-side Rx port of the affected OTR. Check to see if the power level is within the operational threshold. Write down the value. Refer to Table 2-30 in *Technical Specifications*, 323-1701-180 for these values. ***Note:*** You can record the power level from the Equipment—Facility window in the System Manager.

10

If the power level is	**Then** go to
not within the operational threshold	the next step
within the operational threshold	step 17

11

If	**Then** go to
the LOS is raised on two OTRs of the same band and channel	the next step
otherwise	step 14

—continued—

Procedure 16-24 (continued)
OTR—Loss of Signal

Step	Action
12	Compare the values measured in steps 8 and 9. Calculate the loss.

If the loss is	**Then**
greater than the Transponder Protection Tray Maximum Insertion Loss value. Refer to Table 1-32 of *Technical Specifications*, 323-1701-180 to determine the input wavelength dependent value	replace the Transponder Protection Tray. Follow Procedure 2-18 "Replacing a Transponder Protection Tray" in *Maintenance and Replacement Procedures,* 323-1701-546.
less than the Transponder Protection Tray Maximum Insertion Loss value. Refer to Table 1-32 of *Technical Specifications*, 323-1701-180 to determine the input wavelength dependent value	Go to the next step.

13

If	**Then**
the alarm clears	you have completed this procedure
the alarm remains	contact your next level of support

14

If	**Then**
there is a VOA attached to the fiber between the OTR client-side Rx port and the subtending equipment Tx port	re-adjust, and if necessary replace, the VOA. If the alarm clears, you have completed this procedure. If the alarm remains, go to the next step.
there is no VOA attached to the fiber between the OTR client-side Rx port and the subtending equipment Tx port	go to the next step

15 Use the proper cleaning kit to clean all the connectors attached to the client-side receiving OTR. For information on cleaning, see "Cleaning connectors" in *Installing Optical Metro 5200 Shelves and Components,* 323-1701-201.

- Clean each connector separately.
- Record the operating power level after you clean each connector and compare it to the value you wrote down in step 9, this will allow you to see if there is any improvement to the Rx power.
- Make sure there is no problem with the optical fiber plant between the OTR and the subtending equipment.

—continued—

Procedure 16-24 (continued)
OTR—Loss of Signal

Step	Action	
16	**If**	**Then**
	the client side is fibered in an unprotected configuration with a single OTR	clean every connector between the subtending equipment's Tx port, the SC-to-LC patch panel, and the OTR client-side Rx port. For information on cleaning, see "Cleaning connectors" in *Installing Optical Metro 5200 Shelves and Components,* 323-1701-201.
	the client side is fibered in a protected configuration with two OTRs	clean every connector between the subtending equipment's Tx port, the Transponder Protection Tray, and the OTR client-side Rx port. For information on cleaning, see "Cleaning connectors" in *Installing Optical Metro 5200 Shelves and Components,* 323-1701-201.
	If	**Then**
	the alarm clears	you have completed this procedure
	the alarm remains	go to the next step

—continued—

Procedure 16-24 (continued)
OTR—Loss of Signal

Step	Action
17	Reseat the OTR. Follow Procedure 3-68 “Reseating a circuit pack” in *Provisioning and Operating Procedures,* 323-1701-310.

If	Then
the alarm clears	you have completed this procedure
the alarm remains	go to the next step

18 Replace the OTR. Follow Procedure 3-5 “Replacing an OTR circuit pack” in *Maintenance and Replacement Procedures,* 323-1701-546.

If	Then
the alarm clears	the removed circuit pack is faulty. You have completed this procedure.
the alarm remains	the circuit pack is not the problem. Reseat the original circuit pack. Contact your next level of support.

Line side

19 If Automatic Laser Shutdown (ALS) is enabled and active, the lasers must be re-activated before proceeding. Look for ALS alarms on the span. To clear, refer to Procedure 16-33 “OTR—Remote Automatic Laser Shutdown” in this book. Use a network topology diagram to determine the upstream shelf.

—continued—

Procedure 16-24 (continued)
OTR—Loss of Signal

Step	Action
20	Check alarms to make sure the corresponding upstream OTR(s), OFA(s), or APBE(s) have not failed or are missing. If there are alarms, clear these alarms before proceeding. Use a network diagram to determine the upstream components.
21	Use the System Manager to check if you are receiving OTR—Loss of Signal on all OTRs in the same east/west plane, or just on one OTR. ***Note 1:*** You can record the power level from the Equipment-Facility window in the System Manager. ***Note 2:*** On the Optical Metro 5200 shelf, the east plane is defined as slots11-18, the west plane is defined as slots 1-8. On the Optical Metro 5100 shelf, the east plane is defined as slots 3 and 4, while the west plane is defined as slots 1 and 2.

If there is LOS	**Then** go to
on all OTRs of the same band, the same OSID # and in the same east or west plane	the next step
on the only OTR in the east/west plane	the next step
on one of multiple OTRs in the same east/west plane	step 30

—continued—

Procedure 16-24 (continued)
OTR—Loss of Signal

Step	Action
22	Using a network topology diagram and the System Manager alarms, make note of which shelves, which sites, and which directions have a LOS. Write down on the diagram where the LOSs are located. This should help pinpoint exactly where the fault is. Below are some examples: • For example, if there are three bands at Site X (B1, B2, and B3), and only the east side of B2 has LOS, then the problem is located somewhere in the vicinity of the east B2 OMX or the west side of the far-end B2 OMX. Check for a broken patch-cord, a faulty attenuator, a failed OMX, or if there are amplifiers, check the APBE, or the B2 VOA on the PBE. • Using the same Site X as an example, If the west side of EVERY band/shelf at Site X has an LOS, then the problem lies on the west-side line fiber. The line fiber may be broken, one of the OMXs connected to the outside fiber-plant may be faulty, an OSC coupler tray may be broken, or an upstream amplifier/APBE/ECT/PBE may be to blame. • If a line fiber is completely broken, then you should expect LOS on ALL bands at ALL sites that are originating/terminating a wavelength that passes through the broken fiber. ***Note:*** If Intra-site Fault-Sectionalization (IFS) is enabled, there will be indicators to help pinpoint the fault. See Chapter 2 “Troubleshooting fault sectionalization and System Level Equalization Control”.
23	**If** / **Then** go to you found the fault location in step 22 — the next step you could not find the fault location — step 27
24	**If** / **Then** the path is protected — Once you have pinpointed where the fault is, switch traffic off of the affected fiber(s). Follow Procedure 3-48 “Forcing traffic to one path on a protected channel” in *Provisioning and Operating Procedures*, 323-1701-310 for every OTR/OCLD/MOTR that uses the fiber. Refer to a network topology diagram and the list of Channel Assignments in the System Manager to determine the impacted OTR/OCLDs. Go to the next step. the path is unprotected — go to the next step. Performing the next step may affect traffic.

—continued—

Procedure 16-24 (continued)
OTR—Loss of Signal

Step	Action

25 Once you have located where the fault is, use an optical power meter to find the exact cause of the fault. Start at a point on the fiber where there is light, and follow the signal path, making power measurements at each connector, until the cause of the fault is found. Use a site-fibering diagram to follow the signal flow. Look for a fiber, fiber connector, or optical filter with exceeding amounts of loss.

Note: Look in Chapter 6 "Link engineering components" in *Network Planning and Link Engineering*, 323-1701-110 for signal path and component loss values.

CAUTION
DISABLE AUTOMATIC LASER SHUTDOWN FIRST
If Automatic Laser Shutdown (ALS) is enabled, disable ALS for all shelves that will be affected by this maintenance activity. Use a network topology diagram and channel listing to determine the upstream and downstream sites that will be affected when the ring is opened. If you do not know if ALS is enabled or not, assume it is enabled. Follow Procedure 1-43 "Enabling or disabling automatic laser shutdown" in *Provisioning and Operating Procedures*, 323-1701-310 to disable ALS.

26 Fix the problem found in step 25.

If	Then
it is a broken, damaged, or bent fiber	replace the fiber
it is a dirty connector	refer to Chapter 9 "Cleaning connectors" in *Installing Optical Metro 5200 Shelves and Components*, 323-1701-201.
it is a faulty component or optical filter	refer to Chapter 2 "Replacing shelf components" in *Maintenance and Replacement Procedures* in 323-1701-546

If	Then
the alarm remains	go to the next step
the alarm clears	you have completed the procedure

—continued—

Procedure 16-24 (continued)
OTR—Loss of Signal

Step	Action

27

If there is OTR—Loss of Signal	**Then** go to
on the only OTR in the east/west plane	step 28
otherwise	step 29

28

If	Then
there are amplifiers between the upstream and downstream OTR	there is a problem at the amplifier site, the ring requires re-equalization, or both. Contact your next level of support to troubleshoot. If troubleshooting does not clear the alarm, go to step 30.
there are no amplifiers between the upstream and downstream OTR	go to step 30

29

If	Then
there are amplifiers between the upstream and downstream OTRs	there is a problem at the amplifier site, the ring requires re-equalization, or both. Contact your next level of support.
there are no amplifiers between the upstream and downstream OTRs	Contact your next level of support

30

If	Then
the path is protected	switch traffic off of the OTR. Follow Procedure 3-48 “Forcing traffic to one path on a protected channel” in *Provisioning and Operating Procedures*, 323-1701-310. Go to the next step.
the path is unprotected	go to the next step. Performing the next step may affect traffic.

31 If Automatic Laser Shutdown (ALS) is enabled, disable ALS for both the near-end and far-end shelves which contain the alarming OTR and its corresponding upstream OTR. Use a network topology diagram and channel listing to determine the near-end and far-end sites. If you do not know if ALS is enabled or not, assume it is enabled. Follow Procedure 1-43 “Enabling or disabling automatic laser shutdown” in *Provisioning and Operating Procedures*, 323-1701-310 to disable ALS.

—continued—

Procedure 16-24 (continued)
OTR—Loss of Signal

Step	Action
32	Make sure the optical fiber is connected correctly on the OTR line-side Rx port at the near-end site and on the OTR line-side Tx port at the far-end site. If you are using the OMX 4CH + Fiber Manager, check both ends of the patch-cord between the OMX, the SC-LC patch panel, and the OTR. ***Note:*** Use a network topology diagram to determine the near-end and far-end sites. **If** — **Then** the alarm clears — you have completed the procedure the alarm remains — go to the next step
33	Using the System Manager, record the receive power level on the OTR circuit pack. Write down the power level. Make sure that the receiving power level is within the operational threshold. Refer to Table 2-31 in *Technical Specifications*, 323-1701-180 for maximum and minimum Rx/Tx power levels. ***Note:*** You can record the power level from the Equipment—Facility window in the System Manager. **If** — **Then** the received power is within the operational threshold — the problem is with the OTR. Go to the next step. the received power is not within the operational threshold — go to step 36

—continued—

Procedure 16-24 (continued)
OTR—Loss of Signal

Step	Action
34	Reseat the OTR. Follow Procedure 3-68 “Reseating a circuit pack” in *Provisioning and Operating Procedures,* 323-1701-310.

If	Then
the alarm clears	you have completed this procedure
the alarm remains	go to the next step

Step	Action
35	Replace the OTR. Follow Procedure 3-5 “Replacing an OTR circuit pack” in *Maintenance and Replacement Procedures*, 323-1701-546.

If	Then
the alarm clears	you have completed the procedure
the alarm remains	contact your next level of support

36 Use the System Manager to check the transmitting power of the corresponding upstream OTR. Make sure that the transmit power level is within the operational threshold.

Note 1: You can record the power level from the Equipment—Facility window in the System Manager.

Note 2: The “upstream” OTR is the OTR that is originating the signal which the alarming “downstream” OTR is receiving. Use a network topology map to determine the “upstream” OTR.

Note 3: Refer to Table 2-31 in *Technical Specifications*, 323-1701-180 for minimum and maximum Tx power levels.

If the transmit power level is	**Then** go to
not within the operational threshold	the next step
within the operational threshold	step step 39

—continued—

Procedure 16-24 (continued)
OTR—Loss of Signal

Step	Action

37 Reseat the upstream OTR. Follow Procedure 3-68 "Reseating a circuit pack" in *Provisioning and Operating Procedures,* 323-1701-310.

If	Then
the alarm clears	you have completed this procedure
the alarm remains	go to the next step

38 Replace the upstream OTR. Follow Procedure 3-5 "Replacing an OTR circuit pack" in *Maintenance and Replacement Procedures*, 323-1701-546.

If	Then
the alarm clears	the removed circuit pack is faulty. You have completed this procedure.
the alarm remains	make sure the new circuit pack's line-side Tx port is within the operational threshold and go to the next step

39 Use the proper cleaning kit to clean all the connectors attached to the receiving (near-end) OTR line-side Rx port and to the line-side Tx Port on the transmitting (far-end) OTR. For information on cleaning, see "Cleaning connectors" in *Installing Optical Metro 5200 Shelves and Components,* 323-1701-201. Use a network topology diagram to determine the transmitting (far-end) OTR.

Note: If you are using the OMX 4CH + Fiber Manager, clean both ends of the patch-cord between the OMX and the OTR.

— Clean each connector separately.

— Record the operating power level after you clean each connector and compare it to the value you wrote down in step step 33, this will allow you to see if there is any improvement to the Rx power.

CAUTION
Risk of loss of traffic across multiple bands
Do not clean any optical fibers on the optical fiber plant, or on connections to the OMX. This affects traffic over multiple bands. Clean only the pigtail connections at the specified OTR circuit packs.

If	Then
the alarm clears	you have completed the procedure
the alarm remains	it is possible that the patch cord that connects the OTR to the OMX at the near-end or far-end is broken damaged or bent. Try replacing the patch cord.

—continued—

Procedure 16-24 (continued)
OTR—Loss of Signal

Step	Action

ATTENTION

If you set a forced switch on the path, make sure you remove the switch when the procedure is completed. Follow Procedure 3-49 "Removing a manual, force, or lockout switch from a protection path" in *Provisioning and Operating Procedures*, 323-1701-310.

If you are using ALS and disabled it during this procedure, re-enable it for each site. Follow Procedure 1-43 "Enabling or disabling automatic laser shutdown" in *Provisioning and Operating Procedures*, 323-1701-310.

—end—

Procedure 16-25
OTR—Low Optical Power Warning

This alarm can be raised on the client-side and line-side interfaces.

> ***Note:*** This alarm is not supported on the client-side of the OTR 2.5 Gbit/s Flex 850 nm circuit pack.

Probable cause

This alarm becomes active when the optical power level at the optical receiver is lower than the Rx Degrade Threshold of the Rx Power Low parameter. One of the following conditions exists:

- there is a problem with the Transponder Protection Tray
- an optical fiber connection is degraded
- the connector is dirty at the receiving OTR or on the transmitting subtending equipment
- an optical patch cord is damaged
- the receiving OTR is defective
- the transmitting OTR is defective
- the transmitting subtending equipment is defective
- if there is a miniature VOA on the fiber to attenuate the signal, it may not be operating correctly

Impact

Major, non-service-affecting.

—continued—

Procedure 16-25 (continued)
OTR—Low Optical Power Warning

Precautions

CAUTION
Risk of recovery procedures affecting traffic
This alarm may not be service-affecting, however the recovery action can be service-affecting.

CAUTION
Risk of affecting network reliability
Make sure that all connectors are cleaned before you make the connections (or re-connections) described in this procedure. For cleaning information, see the chapter "Cleaning connectors" in *Installing Optical Metro 5200 Shelves and Components*, 323-1701-201.

Action

Step	Action
1	Check the entry in the Port column on the Fault–Active Alarms window to determine where the alarm is raised.

If the entry is	**Then**
1–CS	the alarm is raised on the client side. Go to step 2.
2–LS	the alarm is raised on the line side. Go to step 13.

—continued—

Procedure 16-25 (continued)
OTR—Low Optical Power Warning

Step	Action

Client side

2

If	**Then** go to
the path is protected	step 3
the path is unprotected	step 5

3

If the alarm is raised	**Then**
on one OTR	check the connections between the Transponder Protection Tray and the OTR Client side Rx. Go to next step.
on two OTRs of the same band and channel	check the connections between subtending equipment Tx and the Transponder Protection Tray Rx. Go to next step.

4

If	**Then**
the alarm clears	you have completed this procedure
the alarm remains	go to the next step

5 Use the System Manager to measure the received power level at the Rx port of the client-side OTR. Check if the Rx power level is within the operational threshold. Write down the value. Refer to Table 2-30 in *Technical Specifications*, 323-1701-180 for the Rx port operational thresholds.

Note: You can record the power level from the Equipment—Facility window in the System Manager.

6

If the power level is	**Then** go to
not within the operational threshold	the next step
within the operational threshold	step 11

7 Make sure that all of the optical fibers between the subtending equipment Tx port and at the OTR client-side Rx port are correctly connected.

8 Make sure the transmitting subtending equipment is functioning correctly and transmitting a valid signal.

—continued—

Procedure 16-25 (continued)
OTR—Low Optical Power Warning

Step	Action	
9	**If**	**Then**
	there is a VOA attached to the fiber between the OTR and the subtending equipment	re-adjust, check for proper functionality, and, if necessary, replace the VOA. If the alarm clears, you have completed this procedure. If the alarm remains, go to the next step.
	there is no VOA attached to the fiber between the OTR and the subtending equipment	go to the next step
10	Use the proper cleaning kit to clean all the connectors between the subtending equipment Tx port and the OTR client-side Rx port. For information on cleaning, see "Cleaning connectors" in *Installing Optical Metro 5200 Shelves and Components,* 323-1701-201. — Clean each connector separately. — Record the operating power level after you clean each connector and compare it to the value you wrote down in step 2, this will allow you to see if there is any improvement to the Rx power. — Make sure there is no problem with the optical fiber plant between the OTR and the subtending equipment. This includes any fixed-pad optical attenuators or patch panels that may be faulty.	
	If	**Then**
	the alarm clears	you have completed this procedure
	the alarm remains	go to the next step

—continued—

Procedure 16-25 (continued)
OTR—Low Optical Power Warning

Step	Action
11	Reseat the OTR. Follow Procedure 3-68 “Reseating a circuit pack” in *Provisioning and Operating Procedures,* 323-1701-310.

If	Then
the alarm clears	you have completed this procedure
the alarm remains	go to the next step

Step	Action
12	Replace the OTR. Follow Procedure 3-5 “Replacing an OTR circuit pack” in *Maintenance and Replacement Procedures,* 323-1701-546.

If	Then
the alarm clears	the removed circuit pack is faulty. You have completed this procedure.
the alarm remains	the circuit pack is not the problem. Reseat the original circuit pack. Contact your next level of support.

Line side

Step	Action
13	Check alarms to make sure the corresponding upstream OTR(s), OFA(s), or APBE(s) have not failed or are missing. If there are alarms, clear these alarms before proceeding. Use a network diagram to determine the upstream components.

—continued—

Procedure 16-25 (continued)
OTR—Low Optical Power Warning

Step	Action
14	Use the System Manager to check if you are receiving OTR—Low Optical Power Warning on more than one OTR in the same east/west plane, or just on a single OTR. ***Note 1:*** You can record the power level from the Equipment—Facility window in the System Manager. ***Note 2:*** On the Optical Metro 5200 shelf, the east plane is defined as slots11-18, the west plane is defined as slots 1-8. On the Optical Metro 5100 shelf, the east plane is defined as slots 3 and 4, while the west plane is defined as slots 1 and 2. ***Note 3:*** Because OTR—Low Optical Power Warning is a threshold alarm, it may not appear on all OTRs. Check and see if the Rx power on all line-side OTR Rx ports in the same east/west plane are relatively low. Refer to Table 2-31 in *Technical Specifications*, 323-1701-180 for the minimum Rx sensitivity of the line-side OTR Rx port.

If there is an OTR—Low Optical Power Warning	**Then** go to
on more than one OTR in the same east/west plane (or all line-side OTR Rx powers are relatively low)	the next step
on the only OTR in the east/west plane	the next step
on one of multiple OTRs in the same east/west plane	step 23

—continued—

Procedure 16-25 (continued)
OTR—Low Optical Power Warning

Step	Action
15	Using a network topology diagram and the System Manager alarms, make note of which shelves, which sites, and which directions have an OTR—Low Optical Power Warning. Write down on the diagram where the LOSs are located. This should help pinpoint exactly where the fault is. Below are some examples: • For example, if there are three bands at Site X (B1, B2, and B3), and only the east side of B2 has Low Optical Power Warning, then the problem is located somewhere in the vicinity of the east B2 OMX or the west side of the far-end B2 OMX. Check for a bent patch-cord, a faulty attenuator, a faulty OMX, or if there are amplifiers, check the APBE, or the B2 VOA on the PBE. • Using the same Site X as an example, If the west side of most every band/shelf at Site X has a Low Optical Power Warning, then the problem probably lies on the west-side line fiber. The line fiber may be dirty, one of the OMXs connected to the outside fiber-plant may be faulty, an OSC coupler tray may be broken, or an upstream amplifier/APBE/ECT/PBE may be to blame. ***Note:*** If Intra-site Fault-Sectionalization (IFS) is enabled, there will be indicators to help pinpoint the fault. See Chapter 2 “Troubleshooting fault sectionalization and System Level Equalization Control”.

16

If	**Then** go to
you find the fault location in step 15	the next step
you cannot find the fault location	step 20

17

If	**Then**
the path is protected	Once you have pinpointed where the fault is, switch traffic off of the affected fiber(s). Follow Procedure 3-48 “Forcing traffic to one path on a protected channel” in *Provisioning and Operating Procedures*, 323-1701-310 for every OTR that uses the fiber. Refer to a network topology diagram and the list of Channel Assignments in the System Manager to determine the impacted OTRs. Go to the next step.
the path is unprotected	go to the next step. Performing the next step may affect traffic.

—continued—

Procedure 16-25 (continued)
OTR—Low Optical Power Warning

Step	Action
18	Once you have located where the fault is, use an optical power meter to find the exact cause of the fault. Start at a point on the fiber where there is light, and follow the signal path, making power measurements at each connector, until the cause of the fault is found. Use a site-fibering diagram to follow the signal flow. Look for a fiber, fiber connector, or optical filter with exceeding amounts of loss. ***Note:*** Look in Chapter 6 "Link engineering components" in *Network Planning and Link Engineering* 323-1701-110 for signal path and component loss values.

CAUTION
DISABLE AUTOMATIC LASER SHUTDOWN FIRST
If Automatic Laser Shutdown (ALS) is enabled, disable ALS for all shelves that will be affected by this maintenance activity. Use a network topology diagram and channel listing to determine the upstream and downstream sites that will be affected when the ring is opened. If you do not know if ALS is enabled or not, assume it is enabled. Follow Procedure 1-43 "Enabling or disabling automatic laser shutdown" in *Provisioning and Operating Procedures*, 323-1701-310 to disable ALS.

19 Fix the problem found in step 18.

- if it is a damaged, bent, or kinked fiber, then replace it.
- if it is a dirty connector refer to Chapter 9 "Cleaning connectors" in *Installing Optical Metro 5200 Shelves and Components*, 323-1701-201.
- if it is a faulty component or filter refer to Chapter 2 "Replacing shelf components" in *Maintenance and Replacement Procedures* in 323-1701-546.

If	Then
the alarm remains	go to the next step
the alarm clears	you have completed the procedure

—continued—

Procedure 16-25 (continued)
OTR—Low Optical Power Warning

Step	Action

20

If there is OTR—Low Optical Power Warning	**Then** go to
on the only OTR in the east/west plane	step 21
otherwise	step 22

21

If	Then
there are amplifiers between the upstream and downstream OTR	there is a problem at the amplifier site, the ring requires re-equalization, or both. Contact your next level of support to troubleshoot. If troubleshooting does not clear the alarm, go to step 23.
there are no amplifiers between the upstream and downstream OTR	go to step 23

22

If	Then
there are amplifiers between the upstream and downstream OTRs	there is a problem at the amplifier site, the ring requires re-equalization, or both. Contact your next level of support.
there are no amplifiers between the upstream and downstream OTRs	Contact your next level of support

23

If	Then
the path is protected	switch traffic off of the OTR. Follow Procedure 3-48 “Forcing traffic to one path on a protected channel” in *Provisioning and Operating Procedures*, 323-1701-310. Go to the next step.
the path is unprotected	go to the next step. Performing the next step may affect traffic.

24 If Automatic Laser Shutdown (ALS) is enabled, disable ALS for both the near-end and far-end shelves which contain the alarming OTR and its corresponding upstream OTR. Use a network topology diagram and channel listing to determine the near-end and far-end sites. If you do not know if ALS is enabled or not, assume it is enabled. Follow Procedure 1-43 “Enabling or disabling automatic laser shutdown” in *Provisioning and Operating Procedures*, 323-1701-310 to disable ALS.

—continued—

Procedure 16-25 (continued)
OTR—Low Optical Power Warning

Step	Action
25	Using the System Manager, record the received power level on the OTR circuit pack. Check if the receiving power level is within the operational threshold as defined below. Refer to Table 2-31 in *Technical Specifications*, 323-1701-180 for the minimum Rx sensitivity of the OTR. ***Note:*** You can record the power level from the Equipment—Facility window in the System Manager.

If	Then
the receive power is greater than (0.5 dB + minimum Rx sensitivity) and less than the receiver overload	the problem is with the OTR. Go to the next step.
the received power is equal to or less than (0.5 dB + minimum Rx sensitivity)	go to step step 27

—continued—

Procedure 16-25 (continued)
OTR—Low Optical Power Warning

Step	Action
26	Replace the OTR. Follow Procedure 3-5 “Replacing an OTR circuit pack” in *Maintenance and Replacement Procedures*, 323-1701-546.

If	Then
the alarm clears	the removed circuit pack is faulty. You have completed this procedure.
the alarm remains	replace the original circuit pack. Contact your next level of support.

27 Use the System Manager to check the transmitting power of the corresponding upstream OTR. Make sure that the transmit power level is within the operational threshold.

Note 1: You can record the power level from the Equipment—Facility window in the System Manager.

Note 2: The “upstream” OTR is the OTR that is originating the signal which the alarming “downstream” OTR is receiving. Use a network topology map to determine the “upstream” OTR.

Note 3: Refer to Table 2-31 in *Technical Specifications*, 323-1701-180 for minimum and maximum Tx power levels.

If the transmit power level is	**Then** go to
not within the operational threshold	the next step
within the operational threshold	step 29

28 Replace the upstream OTR. Follow Procedure 3-5 “Replacing an OTR circuit pack” in *Maintenance and Replacement Procedures*, 323-1701-546.

If	Then
the alarm clears	the removed circuit pack is faulty. You have completed this procedure.
the alarm remains	make sure the new circuit pack’s line-side Tx port is within the operational threshold and go to the next step.

—continued—

Procedure 16-25 (continued)
OTR—Low Optical Power Warning

Step	Action
29	Use the proper cleaning kit to clean all the connectors attached to the receiving (near-end) OTR line-side Rx port and to the line-side Tx Port on the transmitting (far-end) OTR. For information on cleaning, see "Cleaning connectors" in *Installing Optical Metro 5200 Shelves and Components,* 323-1701-201. Use a network topology diagram to determine the transmitting (far-end) OTR. ***Note:*** If you are using the OMX 4CH + Fiber Manager, clean both ends of the patch-cord between the OMX and the OTR. — Clean each connector separately. — Record the operating power level after you clean each connector and compare it to the value you wrote down in step 25, this will allow you to see if there is any improvement to the Rx power.

CAUTION
Risk of loss of traffic across multiple bands
Do not clean any optical fibers on the optical fiber plant, or on connections to the OMX. This affects traffic over multiple bands. Clean only the pigtail connections at the specified OTR circuit packs.

If	Then
the alarm clears	you have completed the procedure
the alarm remains	it is possible that the patch cord that connects the OTR to the OMX at the near-end or far-end is broken damaged or bent. Try replacing the patch cord.

ATTENTION
If you set a forced switch on the path, make sure you remove the switch when the procedure is completed. Follow Procedure 3-49 "Removing a manual, force, or lockout switch from a protection path" in *Provisioning and Operating Procedures*, 323-1701-310.

If you are using ALS and disabled it during this procedure, re-enable it for each site. Follow Procedure 1-43 "Enabling or disabling automatic laser shutdown" in *Provisioning and Operating Procedures*, 323-1701-310.

—end—

Procedure 16-26
OTR—Manual Switch to (West) or (East) path active

Probable cause

The Manual Switch to West Path Active alarm becomes active when the user requests that the signal on a protected revertive path be switched to the west path.

The Manual Switch to East Path Active alarm becomes active when the user requests that the signal on a protected revertive path be switched to the east path.

This is a normal indication if a Manual Switch has been requested for testing or maintenance purposes.

Impact

Warning, non-service-affecting.

Action

Step	Action
1	Determine if the manual switch is active for testing or maintenance purposes.
2	**If** the manual is / **Then** necessary for testing or maintenance activities — you have completed this procedure not necessary — go to the next step
3	Remove the Manual switch if it is not necessary. Follow Procedure 3-49 "Removing a manual, force, or lockout switch from a protection path" in *Provisioning and Operating Procedures,* 323-1701-310. **If** / **Then** the alarm clears — you have completed this procedure the alarm remains — contact your next level of support

—end—

Procedure 16-27
OTR—Optical Receiver Overload

Probable cause

This alarm is raised when the OTR circuit pack is receiving an abnormally high optical input signal. One of the following conditions exists:

- the receiving OTR circuit pack is defective
- the transmitting OTR circuit pack is defective
- the network contains amplifiers that are not equalized properly. If there is a miniature VOA on the fiber to attenuate the signal, it may not be operating correctly.

Impact

Table 16-10 lists the impact that the alarm has under different conditions.

Table 16-10
OTR Optical Receiver Overload alarm impact

Conditions	Severity	Impact
The alarm reported on the line-side is critical under the following conditions: • there are channel assignments on the OTR, and the OTR is in-service • the path assigned to the OTR is unprotected or the path assigned to the OTR is protected and the matching OTR has an alarm condition	Critical	Service-affecting
The alarm reported on the line-side is major under the following conditions: • if there are no channel assignments on the OTR • if the path assigned is protected and the matching OTR is operating correctly	Major	Non-service-affecting

—continued—

Procedure 16-27 (continued)
OTR—Optical Receiver Overload

Precautions

CAUTION
Risk of affecting network reliability
Make sure that all connectors are cleaned before you make the connections (or re-connections) described in this procedure. For cleaning information, see the chapter "Cleaning connectors" in *Installing Optical Metro 5200 Shelves and Components*, 323-1701-201.

Action

Step	Action
1	Check the corresponding upstream OTR or, if applicable, Optical Fiber Amplifiers (OFA) for failures or alarms. Use a network topology diagram to determine the upstream OTRs and OFAs. Troubleshoot these alarms/failures before proceeding. ***Note 1:*** A common cause of this alarm is problems with amplifier equalization. If this network uses OFAs, it is strongly recommended that you contact your next level of support to re-equalize the amplifiers. ***Note 2:*** If the transmitting power on the upstream OTR is too high, you might see an OTR Transceiver Degrade alarm on the upstream shelf. Clear this alarm first by following Procedure 16-41 "OTR—Transceiver Degrade".

—continued—

Procedure 16-27 (continued)
OTR—Optical Receiver Overload

Step	Action
2	If Automatic Laser Shutdown (ALS) is enabled, disable ALS for both the near-end and far-end shelves which contain the alarming OTR and its corresponding upstream OTR. Use a network topology diagram and channel listing to determine the near-end and far-end sites. If you do not know if ALS is enabled or not, assume it is enabled. Follow Procedure 1-43 "Enabling or disabling automatic laser shutdown" in *Provisioning and Operating Procedures*, 323-1701-310 to disable ALS.
3	At the downstream shelf, use the System Manager to check if you are receiving OTR High Optical Power Warnings on all OTRs in the same east/west plane, or just on one OTR.

If the Rx power level is too high	**Then** go to
on the only OTR in the east/west plane	step 4
on all OTRs in the same east/west plane	step 6
on one of multiple OTRs in the same east/west plane	step 8

Step	If	Then
4	there are amplifiers between the upstream and downstream OTR	there is a problem at the amplifier site, the ring requires re-equalization, or both. Contact your next level of support to troubleshoot. If troubleshooting does not clear the alarm, go to step 8.
	there are no amplifiers between the upstream and downstream OTR	Go to the next step.

—continued—

Procedure 16-27 (continued)
OTR—Optical Receiver Overload

Step	Action
5	Reduce the input power of the entire band by performing the following steps:

CAUTION
Risk of loss of traffic across multiple wavelengths in the band
Adding fixed pads to the front of the Band drop/Band Rx junction affects traffic on the band/direction. If the traffic is protected, follow Procedure 3-48 "Forcing traffic to one path on a protected channel" in *Provisioning and Operating Procedures*, 323-1701-310 to switch traffic for the OTR in the east/west plane before proceeding.

- Pull out the fiber going into the downstream OTR line-side Rx port and place it into an Optical Power meter.
- Add a fixed pad attenuator to the front of the Band Drop/Band Rx junction of the corresponding OMX. The fixed pad attenuates the entire band and reduces the power on the OMX channel drop ports. To determine the amount of attenuation, choose a fixed-pad with a value that is sufficient to lower the OTR line-side Rx power to within its operational threshold. Refer to Table 2-31 in *Technical Specifications*, 323-1701-180 for minimum and maximum Tx power levels.
- Once you have verified with the power meter that the Rx power is within the operational threshold of the particular OTR line-side Rx port, replace the fiber into the OTR line-side Rx port. The alarm should clear.

CAUTION
Risk of loss of traffic across multiple wavelengths in the band
Adding fixed pads to the front of the Band drop/Band Rx junction affects traffic on the entire band/direction. Follow Procedure 3-48 "Forcing traffic to one path on a protected channel" in *Provisioning and Operating Procedures*, 323-1701-310 to switch traffic for the OTR in the east/west plane before proceeding.

Note: This indicates that there may be a discrepancy between the Network Modeling Tool (NMT) and the actual system. It may be necessary to contact your next level of support for the NMT attenuator values.

—continued—

Procedure 16-27 (continued)
OTR—Optical Receiver Overload

Step	Action

If	Then
the alarm clears	you have completed this procedure
the alarm remains	go to step 8

6

If	Then
there are amplifiers between the upstream and downstream OTRs	there is a problem at the amplifier site, the ring requires re-equalization, or both. Contact your next level of support.
there are no amplifiers between the upstream and downstream OTRs	Go to the next step.

—continued—

Procedure 16-27 (continued)
OTR—Optical Receiver Overload

Step	Action
7	Reduce the input power of the entire band by performing the following steps:

CAUTION
Risk of loss of traffic across multiple wavelengths in the band
Adding fixed pads to the front of the Band drop/Band Rx junction affects traffic on the entire band/direction. If the traffic is protected, follow Procedure 3-48 "Forcing traffic to one path on a protected channel" in *Provisioning and Operating Procedures*, 323-1701-310 to switch traffic for every OTR in the east/west plane before proceeding.

- Pull out the fiber going into the downstream OTR line-side Rx port and place it into an Optical Power meter.
- Add a fixed pad attenuator to the front of the Band Drop/Band Rx junction of the corresponding OMX. The fixed pad attenuates the entire band and reduces the power on all four OMX channel drop ports. To determine the amount of attenuation, choose a fixed-pad with a value that is sufficient to lower the OTR line-side Rx power to within its operational threshold. Refer to Table 2-31 in *Technical Specifications*, 323-1701-180 for minimum and maximum Tx power levels.
- Once you have verified with the power meter that the Rx power is within the operational threshold of the particular OTR line-side Rx port, replace the fiber into the OTR line-side Rx port. The alarm should clear.

CAUTION
Risk of loss of traffic across multiple wavelengths in the band
Adding fixed pads to the front of the Band drop/Band Rx junction affects traffic on the entire band/direction. Follow Procedure 3-48 "Forcing traffic to one path on a protected channel" in *Provisioning and Operating Procedures*, 323-1701-310 to switch traffic for every OTR in the east/west plane before proceeding.

Note: This indicates that there may be a discrepancy between the Network Modeling Tool (NMT) and the actual system. It may be necessary to contact your next level of support for the NMT attenuator values.

—continued—

Procedure 16-27 (continued)
OTR—Optical Receiver Overload

Step	Action

If	Then
the alarm clears	you have completed this procedure
the alarm remains	contact your next level of support

8

If	Then
the path is protected	switch traffic off of the OTR. Follow Procedure 3-48 "Forcing traffic to one path on a protected channel" in *Provisioning and Operating Procedures*, 323-1701-310. Go to the next step.
the path is unprotected	go to the next step. Performing the next step may affect traffic.

9 Make sure the optical fiber is connected correctly on the OTR line-side Rx port at the near-end site and on the OTR line-side Tx port at the far-end site. If you are using the OMX 4CH + Fiber Manager, check both ends of the patch-cords between the OMX, LC-to-SC patch panel, and the OTR.

Note: Use a network topology diagram to determine the near-end (downstream) and far-end (upstream) sites.

If	Then
the alarm clears	you have completed the procedure
the alarm remains	go to the next step

10 Use the System Manager to check the received power level on the line-side Rx port of the near-end OTR. Write down the value. Refer to Table 2-31 in *Technical Specifications*, 323-1701-180 for minimum and maximum Rx/Tx power levels.

Note: You can record the power level from the Equipment—Facility window in the System Manager.

If the power level is	**Then**
above the operational threshold	go to step 13
within the operational threshold	the problem is with the OTR. Go to the next step

—continued—

Procedure 16-27 (continued)
OTR—Optical Receiver Overload

Step	Action
11	Reseat the near-end OTR. Follow Procedure 3-7 "Putting a circuit pack or SFP in-service" in *Provisioning and Operating Procedures,* 323-1701-310.

If	Then
the alarm clears	you have completed this procedure
the alarm remains	go to the next step

12 Replace the near-end OTR. Follow Procedure 3-5 "Replacing an OTR circuit pack" in *Maintenance and Replacement Procedures*, 323-1701-546.

If	Then
the alarm clears	the removed circuit pack is faulty. You have completed this procedure.
the alarm remains	the circuit pack is not the problem. Reseat the original circuit pack. Contact your next level of support.

13 Use the System Manager to check the transmitting power of the corresponding upstream OTR. Refer to Table 2-31 in *Technical Specifications*, 323-1701-180 for minimum and maximum Rx/Tx power levels. Make sure that the transmit power level is within the operational threshold.

Note 1: You can record the power level from the Equipment—Facility window in the System Manager.

Note 2: The "upstream" OTR is the OTR that is originating the signal which the alarming "downstream" OTR is receiving. Use a network topology map to determine the "upstream" OTR.

Note 3: Refer to Table 2-31 in *Technical Specifications*, 323-1701-180 for minimum and maximum Tx power levels.

If the transmit power level is	**Then** go to
not within the operational threshold	the next step
within the operational threshold	step 16

14 Reseat the upstream OTR. Follow Procedure 3-7 "Putting a circuit pack or SFP in-service" in *Provisioning and Operating Procedures,* 323-1701-310.

If	Then
the alarm clears	you have completed this procedure
the alarm remains	go to the next step

—continued—

Procedure 16-27 (continued)
OTR—Optical Receiver Overload

Step	Action
15	Replace the upstream OTR. Follow Procedure 3-5 "Replacing an OTR circuit pack" in *Maintenance and Replacement Procedures*, 323-1701-546.

If	Then
the alarm clears	the removed circuit pack is faulty. You have completed this procedure.
the alarm remains	make sure the new circuit pack's line-side Tx port is within the operational threshold and go to the next step.

16 Reseat the downstream OTR. Follow Procedure 3-7 "Putting a circuit pack or SFP in-service" in *Provisioning and Operating Procedures,* 323-1701-310.

If	Then
the alarm clears	you have completed this procedure
the alarm remains	go to the next step

17 Replace the downstream OTR. Follow Procedure 3-5 "Replacing an OTR circuit pack" in *Maintenance and Replacement Procedures,* 323-1701-546.

If	Then
the alarm clears	the removed circuit pack is faulty. You have completed this procedure.
the alarm remains	the circuit pack is not the problem. Reseat the original circuit pack. Contact your next level of support.

ATTENTION

If you set a forced switch on the path, make sure you remove the switch when the procedure is completed. Follow Procedure 3-49 "Removing a manual, force, or lockout switch from a protection path" in *Provisioning and Operating Procedures*, 323-1701-310.

If you are using ALS and disabled it during this procedure, re-enable it for each site. Follow Procedure 1-43 "Enabling or disabling automatic laser shutdown" in *Provisioning and Operating Procedures*, 323-1701-310.

—end—

Procedure 16-28
OTR—Optical System Identifier Mismatch

Probable cause

This alarm becomes active when the OTR at one site has a different optical system identifier (OSID) from the OTR to which it is optically connected. This alarm is raised on the OTR circuit packs at both ends.

Impact

Minor, non-service-affecting.

Precautions

CAUTION
Risk of interfering with alarm reporting
It is essential that the OSID for all line-facing equipment is provisioned correctly for bridge sites, for hub and spoke rings, and for rings with intrasite fault sectionalization (IFS). Refer to the "Rules for provisioning OSIDs" in *Provisioning and Operating Procedures*, 323-1701-310.

Know the network topology and exercise caution when provisioning OSIDs. Incorrect OSID provisioning can generate unnecessary Incomplete Provisioning alarms, and can cause the IFS feature to operate incorrectly.

Action

Step	Action
1	Refer to the "Rules for provisioning OSIDs" and the associated Precautions in Procedure 3-36 "Provisioning the optical system identifier (OSID)" in *Provisioning and Operating Procedures*, 323-1701-310.
2	Provision the correct OSID for the OTR circuit pack. The Optical System Identifier has to be the same on both ends. Assign an OSID that matches the other equipment in the same ring. Follow Procedure 3-36 "Provisioning the optical system identifier (OSID)" in *Provisioning and Operating Procedures*, 323-1701-310.

—end—

Procedure 16-29
OTR—Overhead Link Failure, Loss of Overhead Synchronization

The Overhead Link Failure alarm is raised when the Point-to-Point Protocol (PPP) is unable to link to the other side (for example if there are echo request failures).

Loss of Overhead Synchronization happens due to carrier detect (link state of the overhead channel) on the Rx port. This alarm is only raised on the 2.5 Gbit/s OTR.

The two alarms require the same resolutions and can be raised on the line-side interface only.

Probable cause

These alarm becomes active when one of the following conditions exists:

- there is a mismatch in the FEC mode provisioning between the near end and the Far end on the 10Gbit/s OTR circuit pack only.
- the Tx Out fiber is connected to the Rx In port of the same OTR
- the specified overhead channel link has lost synchronization
- the overhead channel has degraded
- there is a low signal power
- the optical fiber or connectors are dirty
- the optical fiber is bent or coiled too much
- the receiving OTR circuit pack is defective
- the transmitting OTR circuit pack at the far end is defective
- there are amplifier problems or poor equalization

The Loss of Overhead Synchronization alarm is not raised when the shelf is re-started. This alarm is only generated by the hardware when there is a state transition. When a shelf is re-started, the software does not raise a Loss of Overhead Synchronization alarm because there has not been a state transition.

Impact

Minor, non-service-affecting.

—continued—

Procedure 16-29 (continued)
OTR—Overhead Link Failure, Loss of Overhead Synchronization

Precautions

CAUTION
Risk of recovery procedures affecting traffic
This alarm is not service-affecting, however the recovery action can be service-affecting.

CAUTION
Risk of affecting network reliability
Make sure that all connectors are cleaned before you make the connections (or re-connections) described in this procedure. For cleaning information, see the chapter "Cleaning connectors" in *Installing Optical Metro 5200 Shelves and Components*, 323-1701-201.

Action

Step	Action
1	In the Connection—Channel Assignments window in System Manager, query the channel assignment for the Muxponder at the near-end shelf and note the protection mode in the Protection Mode field.
2	Perform the same query for the Muxponder at the far-end shelf and make sure the protection mode specified is the same as the one noted in step 1.
3	**If** the specified protection mode — **Then** is different — follow Procedure 3-3 "Making or modifying channel assignments" in *Provisioning and Operating Procedures*, 323-1701-310, and modify the Protection Mode field so that the specified protection modes are the same. Go to the next step. is the same — Go to step 5
4	**If** — **Then** the alarm clears — you have completed this procedure the alarm remains — Go to the next step

—continued—

Procedure 16-29 (continued)

Step	Action	
5	Check alarms to make sure the corresponding upstream OTR has not failed or is missing. If applicable, check for Optical Fiber Amplifier (OFA) alarms or warnings in the ring. Use a network topology diagram to determine the upstream OTRs or OFAs. Troubleshoot these problems before proceeding.	
6	**If**	**Then**
	the path is protected	switch traffic off of the OTR. Follow Procedure 3-48 “Forcing traffic to one path on a protected channel” in *Provisioning and Operating Procedures*, 323-1701-310. Go to the next step.
	the path is unprotected	go to the next step. Performing the next step can affect traffic.
7	Make sure the optical fiber is connected correctly on the OTR line-side Rx port at the near-end site and on the OTR line-side Tx port at the far-end site. If you are using the OMX 4CH + Fiber Manager, check both ends of the patch-cord between the OMX, the SC-LC patch panel, and the OTR. Also, make sure there is not a physical loopback on the far-end OTR. ***Note:*** Use a network topology diagram to determine the near-end and far-end sites.	

—continued—

Procedure 16-29 (continued)
OTR—Overhead Link Failure, Loss of Overhead Synchronization

Step	Action
8	Use the System Manager to measure the transmitted power level on the corresponding upstream OTR circuit pack. Make sure that the transmitted power level is within the operational threshold. Refer to Table 2-31 specifications in *Technical Specifications,* 323-1701-180. ***Note 1:*** You can record the power level from the Equipment—Facility window in the System Manager ***Note 2:*** Use a network topology diagram to determine the upstream and downstream OTRs.

If	**Then** go to
the transmitted power is not within the operational threshold	the next step
the transmitted power is within the operational threshold	step 10

Step	Action
9	Replace the upstream OTR. Follow Procedure 3-5 “Replacing an OTR circuit pack” in *Maintenance and Replacement Procedures,* 323-1701-546.

If	**Then**
the alarm clears	you have completed the procedure
the alarm remains	make sure the new circuit pack’s line-side Tx port is within the operational threshold and go to the next step.

Step	Action
10	Use the System Manager to measure the received power level on the line-side Rx port of the near-end OTR. Make sure that the power level is within the operational threshold. Refer to Table 2-31 specifications in *Technical Specifications*, 323-1701-180. Write down the measurement. ***Note:*** You can record the power level from the Equipment—Facility window in the System Manager.

Step	**If** the power level is	**Then**
11	not within the operational threshold	contact your next level of support
	within the operational threshold	go to the next step

—continued—

Procedure 16-29 (continued)
OTR—Overhead Link Failure, Loss of Overhead Synchronization

Step	Action

12 Use the proper cleaning kit to clean all the connectors attached to the receiving (near-end) OTR line-side Rx port and to the line-side Tx Port on the transmitting (far-end) OTR. For information on cleaning, see "Cleaning connectors" in *Installing Optical Metro 5200 Shelves and Components,* 323-1701-201. Use a network topology diagram to determine the transmitting (far-end) OTR.

Note: If you are using the OMX 4CH + Fiber Manager, clean both ends of the patch-cords between the SC-to-LC patch-panel, the OMX, and the OTR.

— Clean each connector separately.

— Record the operating power level after you clean each connector and compare it to the value you wrote down in step 10, this will allow you to see if there is any improvement to the Rx power.

If	Then
the alarm clears	you have completed this procedure
the alarm remains	go to the next step

CAUTION
Risk of loss of traffic across multiple bands
Do not clean any optical fibers on the optical fiber plant, or on connections to the OMX. This affects traffic over multiple bands. Clean only the connections at the specified OTR circuit packs.

13 Reseat the receiving OTR that is raising the alarm. Follow Procedure 3-68 "Reseating a circuit pack" in *Provisioning and Operating Procedures,* 323-1701-310.

If	Then
the alarm clears	you have completed this procedure
the alarm remains	go to the next step

14 Replace the receiving OTR that is raising the alarm. Follow Procedure 3-5 "Replacing an OTR circuit pack" in *Maintenance and Replacement Procedures,* 323-1701-546.

If	Then
the alarm clears	the removed circuit pack is faulty. You have completed this procedure.
the alarm remains	the is not the problem. Reseat the original circuit pack. Go to the next step.

—continued—

Procedure 16-29 (continued)
OTR—Overhead Link Failure, Loss of Overhead Synchronization

Step	Action
15	Reseat the transmitting OTR. Follow Procedure 3-68 "Reseating a circuit pack" in *Provisioning and Operating Procedures,* 323-1701-310.

If	Then
the alarm clears	you have completed this procedure
the alarm remains	go to the next step

Step	Action
16	Replace the transmitting OTR. Follow Procedure 3-5 "Replacing an OTR circuit pack" in *Maintenance and Replacement Procedures,* 323-1701-546.

If	Then
the alarm clears	the removed circuit pack is faulty. You have completed this procedure.
the alarm remains	the circuit pack is not the problem. Reseat the original circuit pack. Contact your next level of support.

ATTENTION

If you set a forced switch on the path, make sure you remove the switch when the procedure is completed. Follow Procedure 3-49 "Removing a manual, force, or lockout switch from a protection path" in *Provisioning and Operating Procedures*, 323-1701-310.

—end—

Procedure 16-30
OTR—Path Lockout Active

Probable cause

This alarm becomes active when you set a lockout on the active path in a protected OTR connection. The alarm remains as long as the lockout is active.

This is a normal indication if a path lockout has been set for testing or maintenance purposes.

Impact

Minor, non-service-affecting.

Action

Step	Action
1	Determine if the path lookout is set for testing or maintenance purposes.
2	**If** the path lockout is / **Then** necessary for testing or maintenance activities — you have completed this procedure not necessary — go to the next step
3	Release the path Lockout switch if it is not necessary. Follow Procedure 3-49 "Removing a manual, force, or lockout switch from a protection path" in *Provisioning and Operating Procedures,* 323-1701-310. **If** / **Then** the alarm clears — you have completed this procedure the alarm remains — contact your next level of support

—end—

Procedure 16-31
OTR—Performance Monitoring Timer Failed

Probable cause

This alarm becomes active when the OTR circuit pack is not receiving performance monitoring data from the SP.

Impact

Major, non-service-affecting.

Precautions

CAUTION
Risk of recovery procedures affecting traffic
This alarm is not service-affecting, however the recovery action can be service-affecting.

CAUTION
Risk of affecting network reliability
Make sure that all connectors are cleaned before you make the connections (or re-connections) described in this procedure. For cleaning information, see the chapter "Cleaning connectors" in *Installing Optical Metro 5200 Shelves and Components*, 323-1701-201.

—continued—

Procedure 16-31 (continued)
OTR—Performance Monitoring Timer Failed

Action

Step	Action
1	Using the Fault—Active Alarms window in System Manger, check to see if the Performance Monitoring Timer Failed alarm is raised by more than one circuit pack in the shelf.

If	Then go to
the alarm is raised by only this circuit pack	the next step
the alarm is raised on multiple circuit packs	step 5

2

If	Then
the path is protected	switch traffic off of the OTR. Follow Procedure 3-48 “Forcing traffic to one path on a protected channel” in *Provisioning and Operating Procedures*, 323-1701-310. Go to the next step.
the path is unprotected	go to the next step. Performing the next step may affect traffic.

3 Reseat the OTR. Follow Procedure 3-68 “Reseating a circuit pack” in *Provisioning and Operating Procedures,* 323-1701-310.

If	Then
the alarm clears	you have completed this procedure
the alarm remains	go to the next step

4 Replace the OTR. Refer to Procedure 3-5 “Replacing an OTR circuit pack” in *Maintenance and Replacement Procedures,* 323-1701-546.

If	Then
the alarm clears	the removed circuit pack is faulty. You have completed this procedure.
the alarm remains	the circuit pack is not the problem. Reseat the original circuit pack. Go to step 5.

—continued—

Procedure 16-31 (continued)
OTR—Performance Monitoring Timer Failed

Step	Action
5	Reseat the SP. Follow Procedure 3-68 “Reseating a circuit pack” in *Provisioning and Operating Procedures,* 323-1701-310.

If	Then
the alarm clears	you have completed this procedure
the alarm remains	go to the next step

Step	Action
6	Replace the SP. Refer to Procedure 3-13 “Replacing an SP circuit pack” in *Maintenance and Replacement Procedures* 323-1701-546.

If	Then
the alarm clears	the removed circuit pack is faulty. You have completed this procedure.
the alarm remains	the circuit pack is not the problem. Reseat the original circuit pack. Contact your next level of support.

ATTENTION

If you set a forced switch on the path, make sure you remove the switch when the procedure is completed. Follow Procedure 3-49 “Removing a manual, force, or lockout switch from a protection path” in *Provisioning and Operating Procedures*, 323-1701-310.

—end—

Procedure 16-32
OTR—Protection Mate Circuit Pack Not Available

This alarm is raised on the line-side interface of the OTR when one (or all) of the facilities of the protection mate OTR in a shelf goes out-of-service (OOS). OTR circuit packs will have a protection mate circuit pack when they are involved in a protected channel assignment. To clear the alarm you must put the OOS facility of the protection mate OTR circuit pack In-Service (IS).

Probable cause

This alarm becomes active when one of the facilities of the protection mate OTR in the shelf is out-of-service (OOS).

Impact

Major, non-service-affecting.

> ***Note:*** Traffic is lost if the remaining OTR fails or is taken out-of-service before the OTR it is paired with is returned to service.

Requirements

You must be logged into the System Manager to perform this procedure. To log into the network, follow Procedure 1-1, "Logging into the network" in *Provisioning and Operating Procedures*, 323-1701-310.

Action

Step	Action
1	In the System Manager, select the shelf with the OTR that raised the alarm.
2	Put the facilities of the protection mate OTR circuit pack In-Service. Follow Procedure 3-10 "Putting a circuit pack or SFP facility in-service" in *Provisioning and Operating Procedures*, 323-1701-310. If the protection mate OTR circuit pack is out-of-service, follow Procedure 3-7 "Putting a circuit pack or SFP in-service" in *Provisioning and Operating Procedures*, 323-1701-310.

—end—

Procedure 16-33
OTR—Remote Automatic Laser Shutdown

ATTENTION

If a fiber break occurs and is being repaired when automatic laser shutdown (ALS) or automatic laser recovery (ALR) is active on a fiber, there are impacts on the behavior of the alarms in the system. If you use light to test the broken fiber (with a light source or an optical time domain reflectometer (OTDR)), you clear the ALS alarms. This is because the shelf detects light and clears the Loss of Signal (LOS) condition. As a result, the shelf and the remote shelf power up the laser (depending on whether both Tx and Rx fibers are cut or only one of them is cut). If a Remote Automatic Laser Shutdown alarm is raised on the shelf when the light is removed, the alarm is replaced by an LOS alarm.

If all the channels impacted by the fiber break detect light when the laser is powered up, the Automatic Laser Shutdown alarm is cleared This is an expected behavior because a shelf cannot distinguish between a light source from an optical test set or a light source from a remote shelf.

Probable cause

This circuit pack-level alarm becomes active when a laser is shut down after a fiber break. The alarm is raised on the Rx line-side port of the OTR of the remote shelf that sends out the signal. Clearing the alarm requires first physically repairing the broken fiber and then restoring traffic through the System Manager. To restore traffic, you can either issue a manual laser activation command or enable automatic laser recovery. Follow this procedure to clear the alarm.

Impact

Warning, non-service-affecting.

—continued—

Procedure 16-33 (continued)
OTR—Remote Automatic Laser Shutdown

Requirements

You must be logged into the System Manager as an Admin or Operator level user.

The laser activation command only needs to be issued at one end of a span that is in ALS mode.

When a network is in ALS mode, you cannot rely on the light in the fiber to locate a fiber cut. Nortel Networks recommends that you use an optical time domain reflectometer (OTDR) to project light in the fiber when a Loss of Signal alarm is detected. The OTDR device provides information about the location of the fiber cut. You can also use a light source device to generate an optical signal into the fiber. In this case, you troubleshoot the fiber cut in the same way as when the ALS feature is disabled.

After ALS recovery from any major fiber plant disturbance (fiber cut/splice, fiber replacement, adding or removing bands or channels) the optical signal should be re-equalized. Follow the appropriate procedure in *Testing and Equalization Procedures*, 323-1801-222.

Action

Step	Action	
1	Repair the broken fiber in the field.	
2	**If** you want	**Then**
	manual laser recovery	see Procedure 1-45, "Enabling manual laser recovery" in *Provisioning and Operating Procedures*, 323-1701-310.
	automatic laser recovery	see Procedure 1-44, "Enabling or disabling automatic laser recovery" in *Provisioning and Operating Procedures*, 323-1701-310.
3	**If**	**Then**
	the alarm clears	you have completed this procedure
	the alarm remains	contact your next level of support

—end—

Procedure 16-34
OTR—Remote Defect Indication

This alarm is raised for different reasons depending on whether it is raised on the line-side or the client-side of the OTR. For details, see the Probable cause section below.

Probable cause

Client side

The alarm becomes active on the client-side when a fault occurs in the signal that is transmitted from the OTR to the subtending equipment (see Figure 16-1). The subtending equipment detects the signal fault and, if capable, responds by transmitting a Remote Defect Indication (RDI) signal to the OTR. When the OTR receives the RDI signal, it raises an RDI warning, non-service-affecting alarm.

Figure 16-1
OTR–Remote Defect Indication alarm, client side

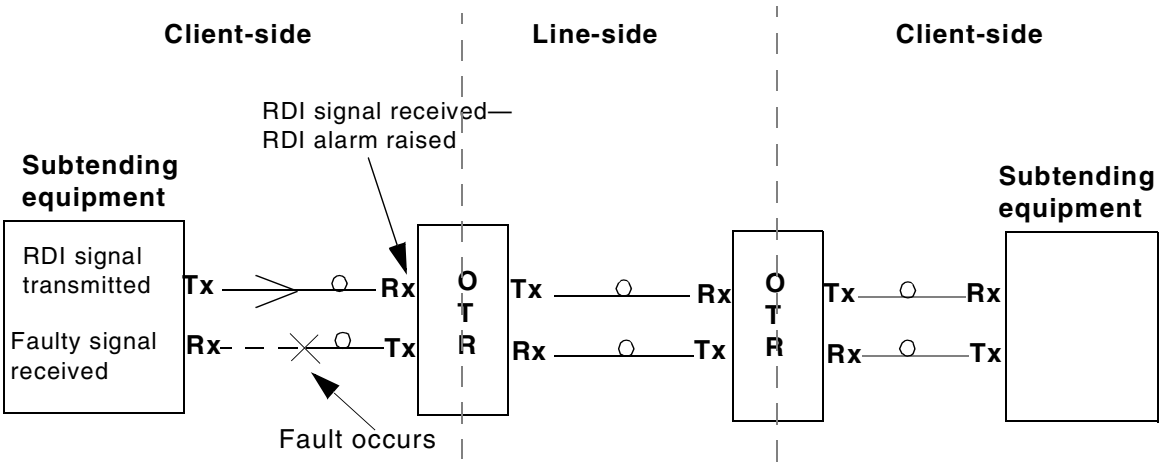

—continued—

Procedure 16-34 (continued)
OTR—Remote Defect Indication

Line side
This alarm becomes active on the line-side when the following conditions exist:

- when a fault occurs in the signal that is transmitted between the OTRs (see Figure 16-2). This causes the client side laser in the OTR to shutdown and a loss of signal alarm to be raised on the subtending equipment. If capable, the subtending equipment transmits a remote defect indication (RDI) signal back to the OTR. The RDI warning, non-service-affecting alarm is raised at the client-side interface of OTR-B and at the line-side interface of OTR-A.
- when a fault occurs in the signal that is transmitted between the OTRs and the Remote Fault Notification is enabled (For more information on RFN, see "Fault sectionalization" in *Software and User Interface*, 323-1701-101). In this case, the OTR detecting the fault sends a remote fault notification message in the overhead channel back to the near-end OTR (i.e., OTR-A in Figure 16-2). When the near-end OTR receives this remote fault notification message, an RDI Critical, SA alarm is raised on the Rx port.

—continued—

Procedure 16-34 (continued)
OTR—Remote Defect Indication

Figure 16-2
OTR–Remote Defect Indication alarm, line side

OM2837p

Remote Fault Notification feature disabled

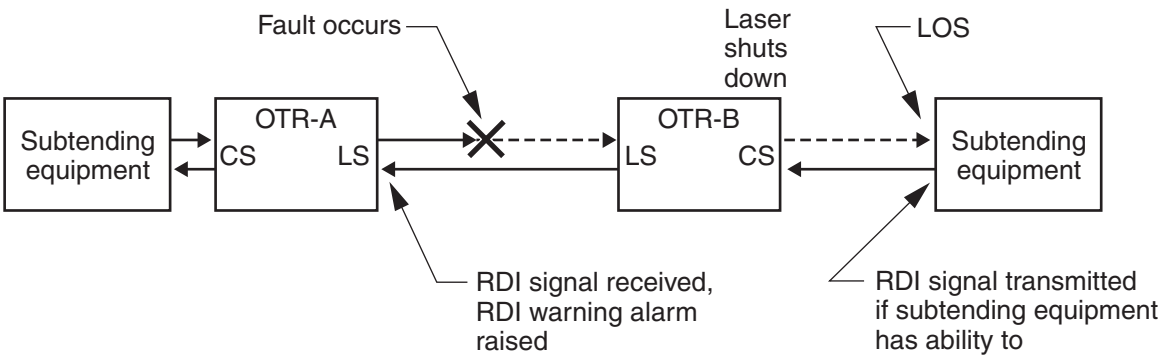

Remote Fault Notification feature enabled

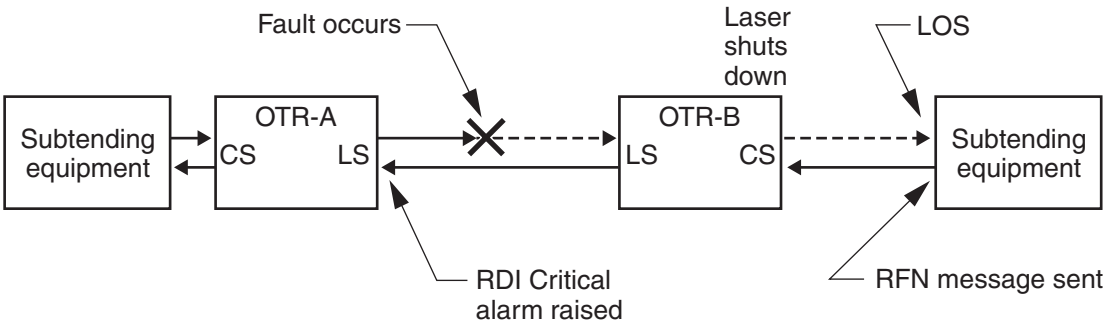

—continued—

Procedure 16-34 (continued)
OTR—Remote Defect Indication

Impact

Warning, non-service-affecting.

Critical, service-affecting (if Remote Fault Notification is enabled). For more information on RFN, see "Fault sectionalization" in *Software and User Interface*, 323-1701-101.

Requirements

To clear this alarm, use the System Manager to examine the alarms raised by the OTRs, or other equipment in the signal path, to isolate the cause.

—continued—

Procedure 16-34 (continued)
OTR—Remote Defect Indication

Action

Step	Action
1	In System Manager, open the Fault–Active Alarms window.
2	Identify the OTR that is raising the alarm. Read the entry in the Port column to determine if the alarm is raised on the client-side or the line-side.

If the entry is	**Then**
1–CS	the alarm is raised on the client side
2–LS	the alarm is raised on the line side

Step	Action
3	If the RDI alarm is raised only on the OTR client-side, the fault is on the path between the OTR and the subtending equipment. Follow the appropriate trouble clearing procedures for the subtending equipment to resolve the problem.

If	**Then**
the RDI alarm clears	you have completed this procedure
the RDI alarm remains	contact your next level of support

Step	Action
4	If the RDI alarm is raised on both the client-side and the line-side, the fault is on the path between the transmitting OTR and the receiving OTR.
5	On the Fault–Active Alarms window, examine the alarms that are raised to identify the cause of this fault. Follow the appropriate procedures to clear the alarms.

If	**Then**
the RDI alarm clears	you have completed this procedure
the RDI alarm remains	contact your next level of support

—end—

Procedure 16-35
OTR—Remote Fault

This alarm is raised on the Rx client-side interface of the OTR 10 Gbit/s Enhanced circuit pack and only when the Rx client-side interface is in Lan Phy mode.

Probable cause

This alarm indicates that there is a problem at the upstream subtending equipment or facility.

Impact

Warning, non-service-affecting.

Precautions

CAUTION
Risk of affecting network reliability
Make sure that all connectors are cleaned before you make the connections (or re-connections) described in this procedure. For cleaning information, see the chapter "Cleaning connectors" in *Installing Optical Metro 5200 Shelves and Components*, 323-1701-201.

—continued—

Procedure 16-35 (continued)
OTR—Remote Fault

Action

Step	Action
1	Make sure the transmitting subtending equipment is functioning correctly and transmitting a valid signal (correct bit rate and protocol).
2	Use the an optical power meter to measure the transmit power on the subtending equipment. Make sure it is working correctly and that the power of the transmitted signal is at the correct power level according to the manufacturer's specifications.

If	Then
the subtending equipment Tx laser is out of specification	repair or replace the subtending equipment. Go to the next step.
the subtending equipment Tx laser is within specification	go to step 4

3

If	Then
the alarm clears	you have completed this procedure
the alarm remains	go to the next step

4 Reseat the OTR. Follow Procedure 3-68 "Reseating a circuit pack" in *Provisioning and Operating Procedures,* 323-1701-310.

If	Then
the alarm clears	you have completed this procedure
the alarm remains	go to the next step

5 Replace the OTR. Follow Procedure 3-5 "Replacing an OTR circuit pack" in *Maintenance and Replacement Procedures,* 323-1701-546.

If	Then
the alarm clears	the removed circuit pack is faulty. You have completed this procedure.
the alarm remains	the circuit pack is not the problem. Reseat the original circuit pack. Contact your next level of support.

—end—

Procedure 16-36
OTR—Surrogate Alarm Indication Signal

This alarm is raised when there is a problem at the far-end 2.5 Gbit/s OTR.

Probable cause

This alarm becomes active on the line-side when it detects a Surrogate Payload Signal fault.

When raised against the line facility, this alarm indicates that there is a problem at the far-end 2.5 Gbit/s OTR.

Impact

Warning, non-service-affecting.

Action

Step	Action
1	Check the entry in the Port column on the Fault–Active Alarms window to determine where the alarm is raised.
2	Make sure that **a.** both the line facility and client facility on the far-end OTR are in-service. Refer to Procedure 3-10 “Putting a circuit pack or SFP facility in-service” in *Provisioning and Operating Procedures*, 323-1701-310. Use a network topology diagram to determine the far-end site. **b.** there is a channel assignment on the far-end OTR. Follow Procedure 3-3 “Making or modifying channel assignments” in *Provisioning and Operating Procedures*, 323-1701-310. **c.** there is no Loss of Signal, Loss of Frame, or Loss of Lock alarm on the client facility on the far-end OTR. Follow Procedure 16-22 “OTR—Loss of Frame”, Procedure 16-23 “OTR—Loss of Lock”, and Procedure 16-24 “OTR—Loss of Signal”.
3	**If** / **Then** the alarm clears / you have completed this procedure the alarm remains / contact your next level of support

—end—

Procedure 16-37
OTR—TCA - Optical Power Rx High

This alarm can be raised on the client-side and line-side interfaces.

> ***Note:*** This alarm is not supported on the client-side of the OTR 2.5 Gbit/s Flex 850 nm circuit pack.

Probable cause

This alarm becomes active when the power of the optical signal received is exceeding the user-defined threshold of the Rx Power High parameter. It can also be raised if the user-defined threshold value is not properly set.

If there is a miniature VOA on the fiber to attenuate the signal, it may not be operating correctly.

Impact

Minor, non-service-affecting.

CAUTION
Risk of recovery procedures affecting traffic
This alarm is not service-affecting, however the recovery action can be service-affecting.

—continued—

Procedure 16-37 (continued)
OTR—TCA - Optical Power Rx High

Precautions

ATTENTION
Power fluctuating around user defined TCAs and alarm toggling
This alarm may toggle on the System Manager if the receive optical power reading fluctuates around the user defined TCA threshold. To clear the behavior of alarm toggling, move the user defined TCA threshold away from the power range around which the optical power reading fluctuates, or adjust the power level to the acceptable range so that the alarm is cleared.

CAUTION
Risk of affecting network reliability
Make sure that all connectors are cleaned before you make the connections (or re-connections) described in this procedure. For cleaning information, see the chapter "Cleaning connectors" in *Installing Optical Metro 5200 Shelves and Components*, 323-1701-201.

—continued—

Procedure 16-37 (continued)
OTR—TCA - Optical Power Rx High

Action

Step	Action

1 Check the entry in the Port column on the Fault–Active Alarms window to determine where the alarm is raised.

If the entry is	**Then**
1–CS	the alarm is raised on the client side. Go to step 2.
2–LS	the alarm is raised on the line side. Go to step 11.

Client side

2 Make sure that the user threshold value is what you really want. If the value is set too low, adjust it to the desired value.

If	**Then**
the alarm clears	you have completed this procedure
the alarm remains	go to the next step

3

If	**Then**
the path is protected	switch traffic off of the OTR. Follow Procedure 3-44 "Removing traffic from an OTR circuit pack" in *Provisioning and Operating Procedures*, 323-1701-310. Go to the next step.
the path is unprotected	go to the next step. Performing the next step may affect traffic.

4 Use the System Manager to measure the received power level at the client-side Rx port of the affected OTR. Check to see if the power level is within the operational threshold. Write down the value. Refer to Table 2-30 in *Technical Specifications*, 323-1701-180 for these values.

Note: You can record the power level from the Equipment—Facility window in the System Manager.

5

If the power level is	**Then** go to
not within the operational threshold	the next step
within the operational threshold	step 9

—continued—

Procedure 16-37 (continued)
OTR—TCA - Optical Power Rx High

Step	Action

6

If	Then
there is a VOA attached to the fiber between the OTR and the subtending equipment	re-adjust, and if necessary replace, the VOA. If the alarm clears, you have completed this procedure. If the alarm remains, go to the next step.
there is no VOA attached to the fiber between the OTR and the subtending equipment	go to the next step

7 Use the an optical power meter to measure the transmit power on the subtending equipment. Make sure it is working correctly and that the power of the transmitted signal is at the correct power level according to the manufacturer's specifications.

If	Then
the subtending equipment Tx laser is out of specification	repair or replace the subtending equipment. If the alarm clears, you have finished this procedure. If the alarm remains, go to the next step.
the subtending equipment Tx laser is within specification	go to the next step

8 Use the proper cleaning kit to clean all the connectors between the subtending equipment Tx port and the OTR client-side Rx port. For information on cleaning, see "Cleaning connectors" in *Installing Optical Metro 5200 Shelves and Components,* 323-1701-201.

— Clean each connector separately.

— Record the operating power level after you clean each connector and compare it to the value you wrote down, this will allow you to see if there is any improvement to the Rx power.

— Make sure there is no problem with the optical fiber plant between the OTR and the subtending equipment. This includes any fixed-pad optical attenuators or patch panels that may be faulty.

If	Then
the alarm clears	you have completed this procedure
the alarm remains	go to the next step

—continued—

Procedure 16-37 (continued)
OTR—TCA - Optical Power Rx High

Step	Action

9 Reseat the OTR. Follow Procedure 3-68 "Reseating a circuit pack" in *Provisioning and Operating Procedures,* 323-1701-310.

If	Then
the alarm clears	you have completed this procedure
the alarm remains	go to the next step

10 Replace the OTR. Follow Procedure 3-5 "Replacing an OTR circuit pack" in *Maintenance and Replacement Procedures,* 323-1701-546.

If	Then
the alarm clears	the removed circuit pack is faulty. You have completed this procedure.
the alarm remains	the circuit pack is not the problem. Reseat the original circuit pack. Contact your next level of support.

Line side

11 Make sure that the user-defined threshold value is correct. If the value is set too low, adjust it to the desired value. Follow Procedure 7-7 "Adjusting PM threshold values" in *Provisioning and Operating Procedures*, 323-1701-310.

If	Then
the alarm clears	you have completed this procedure
the alarm remains	go to the next step

12 Check the corresponding upstream OTR or, if applicable, Optical Fiber Amplifiers (OFA) for failures or alarms. Use a network topology diagram to determine the upstream OTRs and OFAs. Troubleshoot these alarms/failures before proceeding.

Note 1: A common cause of this alarm is problems with amplifier equalization. If this network uses OFAs, it is strongly recommended that you contact your next level of support to re-equalize the amplifiers.

Note 2: If the transmitting power on the upstream OTR is too high, you might see an OTR Transceiver Degrade alarm on the upstream shelf. Clear this alarm first by following Procedure 16-41 "OTR—Transceiver Degrade".

13 If Automatic Laser Shutdown (ALS) is enabled, disable ALS for both the near-end and far-end shelves which contain the alarming OTR and its corresponding upstream OTR. Use a network topology diagram and channel listing to determine the near-end and far-end sites. If you do not know if ALS is enabled or not, assume it is enabled. Follow Procedure 1-43 "Enabling or disabling automatic laser shutdown" in *Provisioning and Operating Procedures*, 323-1701-310 to disable ALS.

—continued—

Procedure 16-37 (continued)
OTR—TCA - Optical Power Rx High

Step	Action
14	At the downstream shelf, use the System Manager to check if you are receiving OTR High Optical Power Warnings on all (or most) OTRs in the same east/west plane or just on one OTR. ***Note 1:*** You can record the power level from the Equipment—Facility window in the System Manager. ***Note 2:*** Because OTR—High Optical Power Warning is a threshold warning, it may not appear on all OTRs. Check and see if the power levels on all OTRs are relatively high. Refer to Table 2-31 in *Technical Specifications*, 323-1701-180 for the OTR receive overload specifications. ***Note 3:*** On the Optical Metro 5200 shelf, the east plane is defined as slots11-18, the west plane is defined as slots 1 to 8. On the Optical Metro 5100 shelf, the east plane is defined as slots 3 and 4, while the west plane is defined as slots 1 and 2.

If the Rx power level is too high	**Then** go to
on all OTRs in the same east/west plane	the next step
on the only OTR in the east/west plane	the next step
on one of multiple OTRs in the same east/west plane	step 17

15	**If**	**Then**
	the ring includes amplifiers	the amplifiers require re-equalizing. Contact your next level of support.
	the ring does not include amplifiers	then go to the next step

—continued—

Procedure 16-37 (continued)
OTR—TCA - Optical Power Rx High

Step	Action

16

CAUTION
Risk of loss of traffic across multiple wavelengths in the band
Adding fixed pads to the front of the Band drop/Band Rx junction affects traffic on the entire band/direction. Follow Procedure 3-48 "Forcing traffic to one path on a protected channel" in *Provisioning and Operating Procedures*, 323-1701-310 to switch traffic for every OTR in the east/west plane before proceeding.

Reduce the input power of the entire band by performing the following steps:

- Add a fixed pad attenuator to the front of the Band Drop/Band Rx junction of the corresponding OMX. The fixed pad attenuates the entire band and reduces the power on all four OMX channel drop ports. To determine the amount of attenuation, choose a fixed-pad with a value that is sufficient to lower the OTR line-side Rx power to within its operational threshold. Refer to Table 2-31 in *Technical Specifications*, 323-1701-180 for minimum and maximum Rx power levels. The alarm should clear.
- Using the System Manager, under Equipment-Facilities, check the Rx powers of all OTRs at the downstream site and verify they are at the correct operational threshold. All OTRs in the band should have the same approximate Rx power. If any OTRs have lower Rx powers, clean the pigtail (or both ends of the patch-cord) going into the respective OTR Rx port. For information on cleaning, see "Cleaning connectors" in *Installing Optical Metro 5200 Shelves and Components,* 323-1701-201.
- if any optical alarms remain on any of the OTRs, contact the alarm clearing procedure in this book, for that card

Note: This indicates that there may be a discrepancy between the Network Modeling Tool (NMT) and the actual system. It may be necessary to contact your next level of support for the NMT attenuator values.

If	Then
the alarm clears	you have completed this procedure
the alarm remains	contact your next level of support

—continued—

Procedure 16-37 (continued)
OTR—TCA - Optical Power Rx High

Step	Action

17

If	Then
the path is protected	switch traffic off of the OTR. Follow Procedure 3-48 "Forcing traffic to one path on a protected channel" in *Provisioning and Operating Procedures*, 323-1701-310.
the path is unprotected	go to the next step. Performing the next step may affect traffic.

18 Make sure the optical fiber is connected correctly on the OTR line-side Rx port at the near-end site and on the OTR line-side Tx port at the far-end site. If you are using the OMX 4CH + Fiber Manager, check both ends of the patch-cords between the OMX, LC-to-SC patch panel, and the OTR.

Note: Use a network topology diagram to determine the near-end and far-end sites.

19 Use the System Manager to check the received power level on the line-side Rx port of the downstream OTR. Write down the value. Refer to Table 2-31 in *Technical Specifications*, 323-1701-180 for minimum and maximum Rx/Tx power levels.

Note: You can record the power level from the Equipment—Facility window in the System Manager.

If the power level is	**Then**
above the operational threshold	go to step 22
within the operational threshold	the problem is with the OTR. Go to the next step.

—continued—

Procedure 16-37 (continued)
OTR—TCA - Optical Power Rx High

Step	Action

20 Reseat the downstream OTR. Follow Procedure 3-68 “Reseating a circuit pack” in *Provisioning and Operating Procedures,* 323-1701-310.

If	Then
the alarm clears	you have completed this procedure
the alarm remains	go to the next step

21 Replace the downstream OTR. Follow Procedure 3-5 “Replacing an OTR circuit pack” in *Maintenance and Replacement Procedures*, 323-1701-546.

If	Then
the alarm clears	the removed circuit pack is faulty. You have completed this procedure.
the alarm remains	the circuit pack is not the problem. Reseat the original circuit pack. Contact your next level of support.

22 Use the System Manager to check the transmitting power of the corresponding upstream OTR line-side Tx port. Make sure that the transmit power level is within the operational threshold.

Note 1: You can record the power level from the Equipment—Facility window in the System Manager.

Note 2: The “upstream” OTR is the OTR that is originating the signal which the alarming “downstream” OTR is receiving. Use a network topology map to determine the “upstream” OTR.

Note 3: Refer to Table 2-31 in *Technical Specifications*, 323-1701-180 for minimum and maximum Tx power levels.

If the transmit power level is	**Then** go to
not within the operational threshold	the next step
within the operational threshold	step 25

23 Reseat the upstream OTR. Follow Procedure 3-68 “Reseating a circuit pack” in *Provisioning and Operating Procedures,* 323-1701-310.

If	Then
the alarm clears	you have completed this procedure
the alarm remains	go to the next step

—continued—

Procedure 16-37 (continued)
OTR—TCA - Optical Power Rx High

Step	Action
24	Replace the upstream OTR. Follow Procedure 3-5 "Replacing an OTR circuit pack" in *Maintenance and Replacement Procedures*, 323-1701-546.

If	Then
the alarm clears	the removed circuit pack is faulty. You have completed this procedure.
the alarm remains	make sure the new circuit pack's line-side Tx port is within the operational threshold and go to the next step.

25 Reseat the downstream OTR. Follow Procedure 3-68 "Reseating a circuit pack" in *Provisioning and Operating Procedures,* 323-1701-310.

If	Then
the alarm clears	you have completed this procedure
the alarm remains	go to the next step

26 Replace the downstream OTR. Follow Procedure 3-5 "Replacing an OTR circuit pack" in *Maintenance and Replacement Procedures,* 323-1701-546.

If	Then
the alarm clears	the removed circuit pack is faulty. You have completed this procedure.
the alarm remains	the circuit pack is not the problem. Reseat the original circuit pack. Contact your next level of support.

ATTENTION

If you set a forced switch on the path, make sure you remove the switch when the procedure is completed. Follow Procedure 3-49 "Removing a manual, force, or lockout switch from a protection path" in *Provisioning and Operating Procedures*, 323-1701-310.

If you are using ALS and disabled it during this procedure, re-enable it for each site. Follow Procedure 1-43 "Enabling or disabling automatic laser shutdown" in *Provisioning and Operating Procedures*, 323-1701-310.

—end—

Procedure 16-38
OTR—TCA - Optical Power Rx Low

This alarm can be raised on the client-side and line-side interfaces.

> ***Note:*** This alarm is not supported on the client-side of the OTR 2.5 Gbit/s Flex 850 nm circuit pack.

Probable cause

This alarm becomes active when the power of the optical signal received is lower than the user-defined threshold of the Rx Power Low parameter. One of the following conditions exists:

- there is a problem with the Transponder Protection Tray
- an optical fiber connection is degraded
- the connector is dirty at the receiving OTR or on the transmitting subtending equipment
- an optical patch cord is damaged
- the receiving OTR is defective
- the transmitting OTR is defective
- the transmitting subtending equipment is defective
- if there is a miniature VOA on the fiber to attenuate the signal, it may not be operating correctly
- the user-defined threshold value is not correct
- an upstream Optical Fiber Amplifier (OFA) is defective, not equalized properly, and/or is in alarm (line-side only)

Impact

Minor, non-service-affecting.

CAUTION
Risk of recovery procedures affecting traffic
This alarm is not service-affecting, however the recovery action can be service-affecting.

—continued—

Procedure 16-38 (continued)
OTR—TCA - Optical Power Rx Low

Precautions

ATTENTION
Power fluctuating around user defined TCAs and alarm toggling
This alarm may toggle on the System Manager if the receive optical power reading fluctuates around the user defined TCA threshold. To clear the behavior of alarm toggling, move the user defined TCA threshold away from the power range around which the optical power reading fluctuates, or adjust the power level to the acceptable range so that the alarm is cleared.

CAUTION
Risk of affecting network reliability
Make sure that all connectors are cleaned before you make the connections (or re-connections) described in this procedure. For cleaning information, see the chapter "Cleaning connectors" in *Installing Optical Metro 5200 Shelves and Components*, 323-1701-201.

Action

Step	Action
1	Make sure that the user-defined threshold for both the client-side and the line-side value is correct. If the value is set too high, adjust it to the desired value.

If	Then
the alarm clears	you have completed this procedure
the alarm remains	go to the next step

Step	Action
2	Read the entry in the Port column on the Fault–Active Alarms window to determine where the alarm is raised.

If the entry is	**Then**
1–CS	the alarm is raised on the client side. Go to step 3.
2–LS	the alarm is raised on the line side. Go to step 15.

—continued—

Procedure 16-38 (continued)
OTR—TCA - Optical Power Rx Low

Client side

3	**If**	**Then** go to
	the path is protected	step 4
	the path is unprotected	step 6

4	**If** the alarm is raised	**Then**
	on one OTR	check the connections between the Transponder Protection Tray and the OTR Client side Rx. Go to next step.
	on two OTRs of the same band and channel	check the connections between subtending equipment Tx and the Transponder Protection Tray Rx. Go to next step.

5	**If**	**Then**
	the alarm clears	you have completed this procedure
	the alarm remains	go to the next step

6 Make sure the optical fiber is correctly connected at both ends.

—continued—

Procedure 16-38 (continued)
OTR—TCA - Optical Power Rx Low

Step	Action
7	Use the System Manager to measure the received power level at the client-side Rx port of the affected OTR. Check to see if the power level is within the operational threshold. Write down the value. Refer to Table 2-30 in *Technical Specifications*, 323-1701-180 for these values. ***Note:*** You can record the power level from the Equipment—Facility window in the System Manager.

8

If the power level is	**Then** go to
not within the operational threshold	the next step
within the operational threshold	step 13

9 Make sure the transmitting subtending equipment is functioning correctly and transmitting a valid signal.

10

If	**Then**
there is a VOA attached to the fiber between the OTR and the subtending equipment	re-adjust, and if necessary replace, the VOA. If the alarm clears, you have completed this procedure. If the alarm remains, go to the next step.
there is no VOA attached to a fiber between the OTR and the subtending equipment	go to the next step

—continued—

Procedure 16-38 (continued)
OTR—TCA - Optical Power Rx Low

Step	Action

11 Use the proper cleaning kit to clean all the connectors between the subtending equipment Tx port and the OTR client-side Rx port. For information on cleaning, see "Cleaning connectors" in *Installing Optical Metro 5200 Shelves and Components,* 323-1701-201.

— Clean each connector separately.

— Record the operating power level after you clean each connector and compare it to the value you wrote down earlier, this will allow you to see if there is any improvement.

— Make sure there is no problem with the optical fiber plant between the OTR and the subtending equipment. This includes any fixed-pad optical attenuators or patch panels that may be faulty.

If	Then
the alarm clears	you have completed this procedure
the alarm remains	go to the next step

12 Make sure there is no problem with the optical fiber plant between the OTR and the subtending equipment.

If	Then
the alarm clears	you have completed this procedure
the alarm remains	go to the next step

13 Reseat the OTR. Follow Procedure 3-68 "Reseating a circuit pack" in *Provisioning and Operating Procedures,* 323-1701-310.

If	Then
the alarm clears	you have completed this procedure
the alarm remains	go to the next step

14 Replace the OTR. Follow Procedure 3-5 "Replacing an OTR circuit pack" in *Maintenance and Replacement Procedures,* 323-1701-546.

If	Then
the alarm clears	the removed circuit pack is faulty. You have completed this procedure.
the alarm remains	the circuit pack is not the problem. Reseat the original circuit pack. Contact your next level of support.

—continued—

Procedure 16-38 (continued)
OTR—TCA - Optical Power Rx Low

	Step	Action
Line side		
	15	Make sure the optical fiber is connected at both ends.
	16	Record the received power level and the threshold value on the OTR circuit pack. You can record the power level from the Performance Monitoring—Equipment tab in the System Manager. Make sure that the receiving power level is within the operational threshold.
	17	Check alarms to make sure the corresponding upstream OTR has not failed or is missing.
	18	Record the transmitted power level and the threshold value on the corresponding upstream OTR circuit pack.You can record the power level from the Performance Monitoring—Equipment tab in the System Manager. Make sure that the transmitted power level is within the operational threshold.

CAUTION
Risk of loss of traffic across multiple bands
Do not clean any optical fibers on the optical fiber plant, or on connections to the OMX. This affects traffic over multiple bands. Clean only the connections at the specified OTR circuit packs.

19

If	Then
the path is protected	switch traffic off of the OTR. Follow Procedure 3-44 “Removing traffic from an OTR circuit pack” in *Provisioning and Operating Procedures*, 323-1701-310. Go to the next step.
the path is unprotected	go to the next step. Performing the next step may affect traffic.

—continued—

Procedure 16-38 (continued)
OTR—TCA - Optical Power Rx Low

Step	Action
20	Use the proper cleaning kit to clean all the connectors. For information on cleaning, see "Cleaning connectors" in *Installing Optical Metro 5200 Shelves and Components,* 323-1701-201. — Clean each connector separately. — Record the operating power level after you clean each connector.

If	Then
the alarm clears	you have completed this procedure
the alarm remains	go to the next step

Step	Action
21	Reseat the OTR. Follow Procedure 3-68 "Reseating a circuit pack" in *Provisioning and Operating Procedures,* 323-1701-310.

If	Then
the alarm clears	you have completed this procedure
the alarm remains	go to the next step

Step	Action
22	Replace the OTR. Follow Procedure 3-5 "Replacing an OTR circuit pack" in *Maintenance and Replacement Procedures,* 323-1701-546.

If	Then
the alarm clears	the removed circuit pack is faulty. You have completed this procedure.
the alarm remains	the circuit pack is not the problem. Reseat the original circuit pack. Contact your next level of support.

—end—

Procedure 16-39
OTR—TCA - Optical Power Tx High

This alarm can be raised on the client-side and line-side interfaces.

> ***Note:*** This alarm is not supported on the client-side of the OTR 2.5 Gbit/s Flex 850 nm circuit pack.

Probable cause

This alarm becomes active when the laser is operating within an acceptable performance range, but output is exceeding the user-defined threshold of the TxPowerHigh parameter. The alarm can also be raised if the user-defined threshold value is not correct.

Impact

Minor, non-service-affecting.

CAUTION
Risk of recovery procedures affecting traffic
This alarm is not service-affecting, however the recovery action can be service-affecting.

—continued—

Procedure 16-39 (continued)
OTR—TCA - Optical Power Tx High

Precautions

ATTENTION
Power fluctuating around user defined TCAs and alarm toggling
This alarm may toggle on the System Manager if the receive optical power reading fluctuates around the user defined TCA threshold. To clear the behavior of alarm toggling, move the user defined TCA threshold away from the power range around which the optical power reading fluctuates, or adjust the power level to the acceptable range so that the alarm is cleared.

CAUTION
Risk of affecting network reliability
Make sure that all connectors are cleaned before you make the connections (or re-connections) described in this procedure. For cleaning information, see the chapter "Cleaning connectors" in *Installing Optical Metro 5200 Shelves and Components*, 323-1701-201.

Action

Step	Action
1	Check the entry in the Port column on the Fault–Active Alarms window to determine where the alarm is raised.

If the entry is	**Then**
1–CS	the alarm is raised on the client side. Go to step 2.
2–LS	the alarm is raised on the line side. Go to step 6.

Client side

Step	Action
2	Make sure that the user-defined threshold for both the client-side and the line-side value is correct. If the value is set too low, adjust it to the desired value.

If	**Then**
the alarm clears	you have completed this procedure
the alarm remains	go to the next step

—continued—

Procedure 16-39 (continued)
OTR—TCA - Optical Power Tx High

Step	Action
3	

If	Then
the path is protected	switch traffic off of the OTR. Follow Procedure 3-44 "Removing traffic from an OTR circuit pack" in *Provisioning and Operating Procedures*, 323-1701-310.
the path is unprotected	go to the next step. Performing the next step may affect traffic.

4 Reseat the OTR. Follow Procedure 3-68 "Reseating a circuit pack" in *Provisioning and Operating Procedures,* 323-1701-310.

If	Then
the alarm clears	you have completed this procedure
the alarm remains	go to the next step

5 Replace the OTR. Refer to Procedure 3-5 "Replacing an OTR circuit pack" in *Maintenance and Replacement Procedures,* 323-1701-546.

If	Then
the alarm clears	the removed circuit pack is faulty. You have completed this procedure.
the alarm remains	the circuit pack is not the problem. Reseat the original circuit pack. Contact your next level of support.

—continued—

Procedure 16-39 (continued)
OTR—TCA - Optical Power Tx High

Step	Action

Line side

6 Make sure that the user-defined threshold for both the client-side and the line-side value is correct. If the value is set too low, adjust it to the desired value.

If	Then
the alarm clears	you have completed this procedure
the alarm remains	go to the next step

7

If	Then
the path is protected	switch traffic off of the OTR. Follow Procedure 3-44 “Removing traffic from an OTR circuit pack” in *Provisioning and Operating Procedures*, 323-1701-310. Go to the next step.
the path is unprotected	go to the next step. Performing the next step can affect traffic.

8 Reseat the OTR. Follow Procedure 3-68 “Reseating a circuit pack” in *Provisioning and Operating Procedures,* 323-1701-310.

If	Then
the alarm clears	you have completed this procedure
the alarm remains	go to the next step

9 Replace the OTR. Refer to Procedure 3-5 “Replacing an OTR circuit pack” in *Maintenance and Replacement Procedures,* 323-1701-546.

If	Then
the alarm clears	the removed circuit pack is faulty. You have completed this procedure.
the alarm remains	the circuit pack is not the problem. Reseat the original circuit pack. Contact your next level of support.

ATTENTION

If you set a forced switch on the path, make sure you remove the switch when the procedure is completed. Follow Procedure 3-49 “Removing a manual, force, or lockout switch from a protection path” in *Provisioning and Operating Procedures*, 323-1701-310.

—end—

Procedure 16-40
OTR—TCA - Optical Power Tx Low

This alarm can be raised on the client-side and line-side interfaces.

Note: This alarm is not supported on the client-side of the OTR 2.5 Gbit/s Flex 850 nm circuit pack.

Probable cause

This alarm becomes active if one of the following conditions exists:

- the laser is operating within an acceptable performance range, but output is exceeding the user-defined threshold of the TxPowerLow parameter
- the client laser is shut down because the OTR is on the protected path, or there is no channel assignment on this OTR
- the line side laser is shut down because the receiving end has the Loss of Signal alarm
- the user-defined threshold value is not correct

Impact

Minor, non-service-affecting.

CAUTION
Risk of recovery procedures affecting traffic
This alarm is not service-affecting, however the recovery action can be service-affecting.

—continued—

Procedure 16-40 (continued)
OTR—TCA - Optical Power Tx Low

Precautions

ATTENTION
Power fluctuating around user defined TCAs and alarm toggling
This alarm may toggle on the System Manager if the receive optical power reading fluctuates around the user defined TCA threshold. To clear the behavior of alarm toggling, move the user defined TCA threshold away from the power range around which the optical power reading fluctuates, or adjust the power level to the acceptable range so that the alarm is cleared.

CAUTION
Risk of affecting network reliability
Make sure that all connectors are cleaned before you make the connections (or re-connections) described in this procedure. For cleaning information, see the chapter "Cleaning connectors" in *Installing Optical Metro 5200 Shelves and Components*, 323-1701-201.

—continued—

Procedure 16-40 (continued)
OTR—TCA - Optical Power Tx Low

Action

Step	Action
1	Make sure that the user-defined threshold for both the client-side and the line-side value is correct. If the value is set too high, adjust it to the desired value.

If	Then
the alarm clears	you have completed this procedure
the alarm remains	go to the next step

2 Read the entry in the Port column on the Fault–Active Alarms window to determine where the alarm is raised.

If the entry is	**Then**
1–CS	the alarm is raised on the client side. Go to step 3.
2–LS	the alarm is raised on the line side. Go to step 7.

Client side

3 Check for a channel assignment.

If	Then
there is no channel assignment	follow Procedure 3-3 “Making or modifying channel assignments” in *Provisioning and Operating Procedures*, 323-1701-310. Go to the next step.
there is a channel assignment	go to step 5

4

If	Then
the alarm clears	you have completed this procedure
the alarm remains	go to the next step

5 Reseat the OTR. Follow Procedure 3-7 “Putting a circuit pack or SFP in-service” in *Provisioning and Operating Procedures,* 323-1701-310.

If	Then
the alarm clears	you have completed this procedure
the alarm remains	go to the next step

—continued—

Procedure 16-40 (continued)
OTR—TCA - Optical Power Tx Low

Step	Action
6	Replace the OTR. Refer to Procedure 3-5 “Replacing an OTR circuit pack” in *Maintenance and Replacement Procedures,* 323-1701-546.

If	Then
the alarm clears	the removed circuit pack is faulty. You have completed this procedure.
the alarm remains	the circuit pack is not the problem. Reseat the original circuit pack. Contact your next level of support.

Line side

7

If	Then
the path is protected	switch traffic off of the OTR. Follow Procedure 3-44 “Removing traffic from an OTR circuit pack” in *Provisioning and Operating Procedures*, 323-1701-310. Go to the next step.
the path is unprotected	go to the next step. Performing the next step can affect traffic.

8 Reseat the OTR. Follow Procedure 3-7 “Putting a circuit pack or SFP in-service” in *Provisioning and Operating Procedures,* 323-1701-310.

If	Then
the alarm clears	you have completed this procedure
the alarm remains	go to the next step

9 Replace the OTR. Refer to Procedure 3-5 “Replacing an OTR circuit pack” in *Maintenance and Replacement Procedures,* 323-1701-546.

If	Then
the alarm clears	the removed circuit pack is faulty. You have completed this procedure.
the alarm remains	the circuit pack is not the problem. Reseat the original circuit pack. Contact your next level of support.

ATTENTION

If you set a forced switch on the path, make sure you remove the switch when the procedure is completed. Follow Procedure 3-49 “Removing a manual, force, or lockout switch from a protection path” in *Provisioning and Operating Procedures*, 323-1701-310.

—end—

Procedure 16-41
OTR—Transceiver Degrade

This alarm can be raised on the client-side and line-side interfaces.

Probable cause

This alarm becomes active when the laser is operating within an acceptable performance range, but the output is beginning to degrade.

Properties of the laser change as the circuit pack ages. When these properties approach unacceptable levels the Transceiver Degrade alarm is raised.

Impact

Minor, non-service-affecting.

Precautions

CAUTION
Risk of recovery procedures affecting traffic
This alarm is not service-affecting, however the recovery action can be service-affecting.

CAUTION
Risk of affecting network reliability
Make sure that all connectors are cleaned before you make the connections (or reconnections) described in this procedure. For cleaning information, see the chapter "Cleaning connectors" in *Installing Optical Metro 5200 Shelves and Components*, 323-1701-201.

—continued—

Procedure 16-41 (continued)
OTR—Transceiver Degrade

Action

Step	Action	
1	**If**	**Then**
	the path is protected	switch traffic off of the OTR. Follow Procedure 3-48 "Forcing traffic to one path on a protected channel" in *Provisioning and Operating Procedures*, 323-1701-310. Go to the next step.
	the path is unprotected	go to the next step. Performing the next step may affect traffic.
2	Reseat the OTR. Follow Procedure 3-68 "Reseating a circuit pack" in *Provisioning and Operating Procedures,* 323-1701-310.	
	If	**Then**
	the alarm clears	you have completed the procedure
	the alarm remains	go to the next step
3	Replace the OTR. Refer to Procedure 3-5 "Replacing an OTR circuit pack" in *Maintenance and Replacement Procedures,* 323-1701-546.	
	If	**Then**
	the alarm clears	the removed circuit pack is faulty. You have completed this procedure.
	the alarm remains	the circuit pack is not the problem. Reseat the original circuit pack. Contact your next level of support.

ATTENTION

If you set a forced switch on the path, make sure you remove the switch when the procedure is completed. Follow Procedure 3-49 "Removing a manual, force, or lockout switch from a protection path" in *Provisioning and Operating Procedures*, 323-1701-310.

—end—

Procedure 16-42
OTR—Tx Alarm Indication Signal

This alarm is raised on the Tx client-side interface of the OTR circuit pack.

Probable cause

This alarm becomes active on the client-side when the line-side upstream equipment sends the SONET/SDH Alarm Indication Signal. This alarm indicates there is a problem at the far-end OTR.

Impact

Warning, non-service-affecting.

Requirements

You must be logged into the System Manager to perform this procedure. To log into the network, follow Procedure 1-1, "Logging into the network" in *Provisioning and Operating Procedures*, 323-1701-310. To view alarms, click on the Fault tab and then click on the Active Alarms tab.

You must have a network topology diagram and a list of the channel assignments provisioned in your network.

—continued—

Procedure 16-42 (continued)
OTR—Tx Alarm Indication Signal

Action

Step	Action
1	Make sure that **a.** both the line facility and client facility on the far-end OTR are in-service. Refer to Procedure 3-10 “Putting a circuit pack or SFP facility in-service” in *Provisioning and Operating Procedures*, 323-1701-310. Use a network topology diagram to determine the far-end site. **b.** there is channel assignment on the far-end OTR. Follow Procedure 3-3 “Making or modifying channel assignments” in *Provisioning and Operating Procedures*, 323-1701-310. **c.** there is no Loss of Signal, Loss of Frame, or Loss of Lock alarm on the client facility on the far-end OTR. Follow Procedure 16-22 “OTR—Loss of Frame”, Procedure 16-23 “OTR—Loss of Lock”, and Procedure 16-24 “OTR—Loss of Signal”.

2

If	Then
the alarm clears	you have completed this procedure
the alarm remains	contact your next level of support

—end—

Procedure 16-43
OTR—Tx High Bit Error Rate

This alarm is raised on the Tx client-side interface of the OTR 10 Gbit/s Enhanced circuit pack and only when the Tx client-side interface is in Lan Phy mode.

Probable cause

This alarm becomes active when the client Tx port detects too many errors in the PLS layer of the Ethernet signal.

Impact

Major, service-affecting.

Precautions

CAUTION
Risk of affecting network reliability
Make sure that all connectors are cleaned before you make the connections (or re-connections) described in this procedure. For cleaning information, see the chapter "Cleaning connectors" in *Installing Optical Metro 5200 Shelves and Components*, 323-1701-201.

—continued—

Procedure 16-43 (continued)
OTR—Tx High Bit Error Rate

Action

Step	Action
1	Make sure the optical fiber is correctly connected.

If	Then
the connection is unprotected	check the fiber connections between the subtending equipment and the OTR. Go to the next step.
the connection is protected	check the fiber connections between the subtending equipment, the Transponder Protection Tray (TPT) and the OTR. Go to the next step.

2 Using the System Manager, or a power meter, record the Rx power on the client-side OTR Rx port. Check that the power level received is within the operational threshold. Refer to Table 2-30 for client-side specifications in *Technical Specifications*, 323-1701-180 for minimum and maximum Rx/Tx power levels. Write down the Rx power.

Note: You can record the power level from the Equipment—Facility window in the System Manager.

3 Make sure the transmitting subtending equipment is functioning correctly and transmitting a valid signal (correct bit rate and protocol).

4 Use the an optical power meter to measure the transmit power on the subtending equipment. Make sure it is working correctly and that the power of the transmitted signal is at the correct power level according to the manufacturer's specifications.

If	Then
the subtending equipment Tx laser is out of specification	repair or replace the subtending equipment. Go to the next step.
the subtending equipment Tx laser is within specification	go to step 9

5

If	Then
the alarm clears	you have completed this procedure
the alarm remains	go to the next step

—continued—

Procedure 16-43 (continued)
OTR—Tx High Bit Error Rate

Step	Action	
6	**If**	**Then**
	there is a VOA attached to a the fiber between the OTR and the subtending equipment	re-adjust, check for proper functionality, and, if necessary, replace the VOA. Go to the next step.
	there is no VOA attached to a fiber between the OTR and the subtending equipment	go to step 8
7	**If**	**Then**
	the alarm clears	you have completed this procedure
	the alarm remains	go to the next step
8	Use the proper cleaning kit to clean all the connectors between the subtending equipment Tx port and the OTR Rx port, and visa-versa. For information on cleaning, see "Cleaning connectors" in *Installing Optical Metro 5200 Shelves and Components,* 323-1701-201. — Clean each connector separately. — Record the operating power level after you clean each connector and compare it to the value you wrote down in step 2, this will allow you to see if there is any improvement to the Rx power. — Make sure there is no problem with the optical fiber plant between the OTR and the subtending equipment.	
	If	**Then**
	the client side is fibered in an unprotected configuration with a single OTR	clean every connector between the subtending equipment's Tx port, the SC-to-LC patch panel, and the OTR client-side Rx port. For information on cleaning, see "Cleaning connectors" in *Installing Optical Metro 5200 Shelves and Components,* 323-1701-201.
	the client side is fibered in a protected configuration with two OTRs	clean every connector between the subtending equipment's Tx port, the Transponder Protection Tray, and the OTR client-side Rx port. For information on cleaning, see "Cleaning connectors" in *Installing Optical Metro 5200 Shelves and Components,* 323-1701-201.
	If	**Then**
	the alarm clears	you have completed this procedure
	the alarm remains	go to the next step

—continued—

Procedure 16-43 (continued)
OTR—Tx High Bit Error Rate

Step	Action
9	Reseat the OTR. Follow Procedure 3-68 “Reseating a circuit pack” in *Provisioning and Operating Procedures,* 323-1701-310.

If	Then
the alarm clears	you have completed this procedure
the alarm remains	go to the next step

Step	Action
10	Replace the OTR. Follow Procedure 3-5 “Replacing an OTR circuit pack” in *Maintenance and Replacement Procedures,* 323-1701-546.

If	Then
the alarm clears	the removed circuit pack is faulty. You have completed this procedure.
the alarm remains	the circuit pack is not the problem. Reseat the original circuit pack. Contact your next level of support.

—end—

Procedure 16-44
OTR—Tx Loss of Frame

This alarm is raised on the Tx client-side interface of the OTR 10 Gbit/s Enhanced circuit pack and only when the Tx client-side interface is in OC-192, STM-64 or 10G Ethernet WAN mode.

Probable cause

The circuit pack is connected to a SONET/SDH network that has a high bit error rate, but not high enough to cause the client-side to report the Loss of Frame alarm. As the signal moves through the Optical Metro 5100/5200 network, additional bit errors are introduced to aggravate the signal to the point where the Tx Loss of Frame is detected.

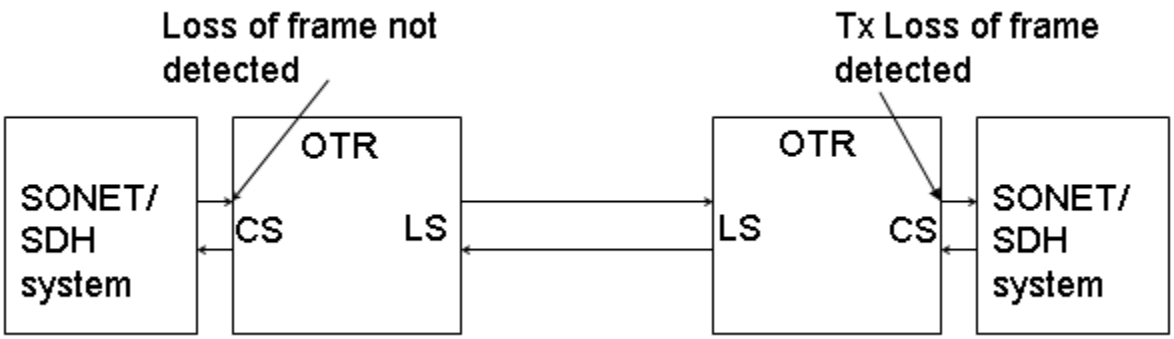

Impact

Table 16-11 on page 16-190 lists the impact that the alarm has under different conditions.

—continued—

Procedure 16-44 (continued)
OTR—Tx Loss of Frame

Table 16-11
OTR Tx Loss of Frame alarm impact

Conditions	Severity	Impact
The alarm reported is critical under the following conditions: • the OTR channel assignment is provisioned as OC-192, STM-64 or 10G Ethernet WAN bit rate, and the OTR is in-service • the path assigned to the OTR is unprotected or the path assigned to the OTR is protected and the matching OTR has an alarm condition	Critical	Service-affecting
The alarm reported is minor under the following conditions: • the OTR channel assignment is provisioned as OC-192, STM-64 or 10G Ethernet WAN bit rate, and the OTR is in-service • the path assigned is protected and the matching OTR is operating correctly	Minor	Non-service-affecting

—continued—

Procedure 16-44 (continued)
OTR—Tx Loss of Frame

Precautions

ATTENTION

If a fiber break occurs and is being repaired when automatic laser shutdown (ALS) or automatic laser recovery (ALR) is active on a fiber, there are impacts on the behavior of the alarms in the system. If you use light to test the broken fiber (with a light source or an optical time domain reflectometer (OTDR)), you clear the ALS alarms. This is because the shelf detects light and clears the Loss of Signal (LOS) condition. As a result, the shelf and the remote shelf power up the laser (depending on whether both Tx and Rx fibers are cut or only one of them is cut). If a Remote Automatic Laser Shutdown alarm is raised on the shelf when the light is removed, the alarm is replaced by an LOS alarm.

If all the channels impacted by the fiber break detect light when the laser is powered up, the Automatic Laser Shutdown alarm is cleared This is an expected behavior because a shelf cannot distinguish between a light source from an optical test set or a light source from a remote shelf.

CAUTION
Risk of affecting network reliability
Make sure that all connectors are cleaned before you make the connections (or re-connections) described in this procedure. For cleaning information, see the chapter "Cleaning connectors" in *Installing Optical Metro 5200 Shelves and Components*, 323-1701-201.

Action

Step	Action
1	Verify if the SONET/SDH system is reporting signal failures or equipment failures. After troubleshooting and clearing the SONET/SDH system alarms, verify if the Tx Loss of Frame alarm is active.

If	Then
the alarm is not active	you have completed the procedure
the alarm is active	go to the next step

—continued—

Procedure 16-44 (continued)
OTR—Tx Loss of Frame

Step	Action
2	Replace the OTR circuit pack reporting the alarm. Follow Procedure 3-5 "Replacing an OTR circuit pack" in *Maintenance and Replacement Procedures*, 323-1701-546

If	Then
the alarm clears	you have completed the procedure
the alarm remains	go to the next step

Step	Action
3	Replace the OTR circuit pack at the far-end. Follow Procedure 3-5 "Replacing an OTR circuit pack" in *Maintenance and Replacement Procedures*, 323-1701-546

If	Then
the alarm clears	you have completed the procedure
the alarm remains	call your next level of support

—end—

Procedure 16-45
OTR—Tx Loss of Synchronization

This alarm is raised on the Tx client-side interface of the OTR 10 Gbit/s Enhanced circuit pack and only when the Tx client-side interface is in Lan Phy mode.

Probable cause

This alarm becomes active when one of the following conditions exists:

- there is an inconsistent bit rate provisioning between the client port of the OTR 10 Gbit/s Enhanced circuit pack and the subtending equipment
- the optical fiber is the wrong type

Impact

Critical, service-affecting.

Precautions

CAUTION
Risk of affecting network reliability
Make sure that all connectors are cleaned before you make the connections (or re-connections) described in this procedure. For cleaning information, see the chapter "Cleaning connectors" in *Installing Optical Metro 5200 Shelves and Components*, 323-1701-201.

Requirements

You must be logged into the System Manager to perform this procedure. To log into the network, follow Procedure 1-1, "Logging into the network" in *Provisioning and Operating Procedures*, 323-1701-310. To view alarms, click on the Fault tab and then click on the Active Alarms tab.

You must have a network topology diagram and a list of the channel assignments provisioned in your network.

—continued—

Procedure 16-45 (continued)
OTR—Tx Loss of Synchronization

Action

Step	Action
1	In the Connection—Channel Assignments window in System Manager, query the channel assignment for the OTR circuit pack and make sure that the bit rate matches the bit rate of the subtending equipment.
2	**If** / **Then** the bit rate needs to be modified — follow Procedure 3-3 "Making or modifying channel assignments" in *Provisioning and Operating Procedures*, 323-1701-310. Go to the next step. the bit rates match — go to step 4
3	**If** / **Then** the alarm clears — you have completed this procedure the alarm remains — go to the next step
4	Make sure the optical fiber is correctly connected. **If** / **Then** the connection is unprotected — check the fiber connections between the subtending equipment and the OTR. Go to the next step. the connection is protected — check the fiber connections between the subtending equipment, the Transponder Protection Tray (TPT) and the OTR. Go to the next step.
5	Using the System Manager, or a power meter, record the Rx power on the client-side OTR Rx port. Check that the power level received is within the operational threshold. Refer to Table 2-30 for client-side specifications in *Technical Specifications*, 323-1701-180 for minimum and maximum Rx/Tx power levels. Write down the Rx power. ***Note:*** You can record the power level from the Equipment—Facility window in the System Manager.
6	Make sure the transmitting subtending equipment is functioning correctly and transmitting a valid signal (correct bit rate and protocol).

—continued—

Procedure 16-45 (continued)
OTR—Tx Loss of Synchronization

Step	Action	
7	Use the an optical power meter to measure the transmit power on the subtending equipment. Make sure it is working correctly and that the power of the transmitted signal is at the correct power level according to the manufacturer's specifications.	
	If	**Then**
	the subtending equipment Tx laser is out of specification	repair or replace the subtending equipment. Go to the next step.
	the subtending equipment Tx laser is within specification	go to step 9
8	**If**	**Then**
	the alarm clears	you have completed this procedure
	the alarm remains	go to the next step
9	**If**	**Then**
	there is a VOA attached to a the fiber between the OTR and the subtending equipment	re-adjust, check for proper functionality, and, if necessary, replace the VOA. Go to the next step.
	there is no VOA attached to a fiber between the OTR and the subtending equipment	go to step 11
10	**If**	**Then**
	the alarm clears	you have completed this procedure
	the alarm remains	go to the next step

—continued—

Procedure 16-45 (continued)
OTR—Tx Loss of Synchronization

Step	Action
11	Use the proper cleaning kit to clean all the connectors between the subtending equipment Tx port and the OTR Rx port, and visa-versa. For information on cleaning, see "Cleaning connectors" in *Installing Optical Metro 5200 Shelves and Components,* 323-1701-201. — Clean each connector separately. — Record the operating power level after you clean each connector and compare it to the value you wrote down in step 5, this will allow you to see if there is any improvement to the Rx power. — Make sure there is no problem with the optical fiber plant between the OTR and the subtending equipment.

If	Then
the client side is fibered in an unprotected configuration with a single OTR	clean every connector between the subtending equipment's Tx port, the SC-to-LC patch panel, and the OTR client-side Rx port. For information on cleaning, see "Cleaning connectors" in *Installing Optical Metro 5200 Shelves and Components,* 323-1701-201.
the client side is fibered in a protected configuration with two OTRs	clean every connector between the subtending equipment's Tx port, the Transponder Protection Tray, and the OTR client-side Rx port. For information on cleaning, see "Cleaning connectors" in *Installing Optical Metro 5200 Shelves and Components,* 323-1701-201.

If	Then
the alarm clears	you have completed this procedure
the alarm remains	go to the next step

—continued—

Procedure 16-45 (continued)
OTR—Tx Loss of Synchronization

Step	Action
12	Reseat the OTR. Follow Procedure 3-68 “Reseating a circuit pack” in *Provisioning and Operating Procedures,* 323-1701-310.

If	Then
the alarm clears	you have completed this procedure
the alarm remains	go to the next step

Step	Action
13	Replace the OTR. Follow Procedure 3-5 “Replacing an OTR circuit pack” in *Maintenance and Replacement Procedures,* 323-1701-546.

If	Then
the alarm clears	the removed circuit pack is faulty. You have completed this procedure.
the alarm remains	the circuit pack is not the problem. Reseat the original circuit pack. Contact your next level of support.

—end—

Procedure 16-46
OTR—Unassigned Optical System Identifier

Probable cause

This alarm becomes active when an OTR is seated in the same shelf, in the same direction (east or west plane) with another OCLD, Muxponder, or OTR, and both circuit packs are of the same band and channel, and the optical system identifier (OSID) of the first circuit pack is unassigned.

For example

- An OCLD (band 1, channel 1) is seated in the west plane of shelf in an unprovisioned slot. When the system autoprovisions the OCLD, the OSID is not assigned (the field is left blank).
- An OTR (band 1, channel 1) is seated in the west plane of the same shelf, in an unprovisioned slot. When the system autoprovisions the OTR, an Unassigned OSID alarm is raised on the OTR.

  Note: The OSID is unassigned when circuit packs autoprovision, so this alarm is raised when circuit packs are first seated in a shelf, in an unprovisioned slot.

Impact

Table 16-12 lists the impact that the alarm has under different conditions.

Table 16-12
OTR Unassigned OSID alarm severity and impact

Condition	Severity	Impact
If any of the following conditions exist: • the path assigned to the OTR is unprotected • the path assigned to the OTR is protected and the matching OTR has an alarm condition	Critical	Service-affecting
If any of the following conditions exist: • there is no channel assignment • the path assigned is protected and the matching OTR is operating correctly	Minor	Non-service-affecting

—continued—

Procedure 16-46 (continued)
OTR—Unassigned Optical System Identifier

Precautions

CAUTION
Risk of interfering with alarm reporting
It is essential that the OSID for all line-facing equipment is provisioned correctly for bridge sites, for hub and spoke rings, and for rings with intrasite fault sectionalization (IFS). Refer to the "Rules for provisioning OSIDs" in *Provisioning and Operating Procedures*, 323-1701-310.

Know the network topology and exercise caution when provisioning OSIDs. Incorrect OSID provisioning can generate unnecessary alarms and can cause the IFS feature to operate incorrectly.

Action

Step	Action
1	Refer to the "Rules for provisioning OSIDs" and the associated Precautions in Procedure 3-36 "Provisioning the optical system identifier (OSID)" in *Provisioning and Operating Procedures*, 323-1701-310.
2	Provision the correct OSID for the circuit pack. Follow Procedure 3-36 "Provisioning the optical system identifier (OSID)" in *Provisioning and Operating Procedures*, 323-1701-310.

—end—

Procedure 16-47
OTR—Unknown Circuit Pack

Probable cause

This alarm becomes active when

- the SP circuit pack fails to retrieve the manufacturing data on the circuit pack (data may be missing or may be incorrect)

or when

- the circuit pack type cannot be recognized by the software (the Release version of the circuit pack is not supported by the Release version of the shelf)

If the slot is provisioned for an OTR, the System Manager displays OTR in the Card column of the Fault–Active Alarms window.

Impact

Major, non-service-affecting

Precautions

CAUTION
Risk of recovery procedures affecting traffic
This alarm is not service-affecting, however the recovery action can be service-affecting.

CAUTION
Risk of affecting network reliability
Make sure that all connectors are cleaned before you make the connections (or re-connections) described in this procedure. For cleaning information, see the chapter "Cleaning connectors" in *Installing Optical Metro 5200 Shelves and Components*, 323-1701-201.

—continued—

Procedure 16-47 (continued)
OTR—Unknown Circuit Pack

Action

Step	Action
1	Read the latest Baseline Report to see if the circuit pack is compatible with the Release version of the shelf. ***Note:*** Baseline Reports are available through Nortel Networks. Refer to the "Technical assistance service telephone numbers" section in "About this document" at the beginning of this book.

2

If the circuit pack	**Then**
is compatible	go to the next step
is incompatible	replace it with a compatible circuit pack. Follow Procedure 3-5 "Replacing an OTR circuit pack" in *Maintenance and Replacement Procedures,* 323-1701-546. If the alarm clears, you have completed this procedure. If the alarm remains, go to the next step.

3

If	**Then**
the path is protected	switch traffic off of the OTR. Follow Procedure 3-48 "Forcing traffic to one path on a protected channel" in *Provisioning and Operating Procedures*, 323-1701-310. Go to the next step.
the path is unprotected	go to the next step. Performing the next step may affect traffic.

4 Reseat the OTR. Follow Procedure 3-68 "Reseating a circuit pack" in *Provisioning and Operating Procedures,* 323-1701-310.

If	**Then**
the alarm clears	you have completed this procedure
the alarm remains	go to the next step

—continued—

Procedure 16-47 (continued)
OTR—Unknown Circuit Pack

Step	Action
5	Replace the OTR. Refer to Procedure 3-5 “Replacing an OTR circuit pack”in *Maintenance and Replacement Procedures* 323-1701-546.

If	Then
the alarm clears	the removed circuit pack is faulty. You have completed this procedure.
the alarm remains	the circuit pack is not the problem. Reseat the original circuit pack. Contact your next level of support.

ATTENTION

If you set a forced switch on the path, make sure you remove the switch when the procedure is completed. Follow Procedure 3-49 “Removing a manual, force, or lockout switch from a protection path” in *Provisioning and Operating Procedures*, 323-1701-310.

—end—

Nortel

Optical Metro 5100/5200

Trouble Clearing and Alarm Reference Guide, Part 3 of 4

Copyright © 2000–2005 Nortel Networks, All Rights Reserved

The information contained herein is the property of Nortel Networks and is strictly confidential. Except as expressly authorized in writing by Nortel Networks, the holder shall keep all information contained herein confidential, shall disclose the information only to its employees with a need to know, and shall protect the information, in whole or in part, from disclosure and dissemination to third parties with the same degree of care it uses to protect its own confidential information, but with no less than reasonable care. Except as expressly authorized in writing by Nortel Networks, the holder is granted no rights to use the information contained herein.

This information is provided “as is”, and Nortel Networks does not make or provide any warranty of any kind, expressed or implied, including any implied warranties of merchantability, non-infringement of third party intellectual property rights, and fitness for a particular purpose.

Nortel, the Nortel logo, the Globemark, and OPTera are trademarks of Nortel Networks.

HP and HP-UX are trademarks of Hewlett-Packard, Inc. Pentium is a trademark of Intel Corporation. Internet Explorer, Windows, and Windows NT are trademarks of Microsoft Corporation. Netscape Communicator is a trademark of Netscape Communications Corporation. Common Desktop Environment, Java, Solaris, and Ultra are trademarks of Sun Microsystems, Inc. UNIX is a trademark of X/Open Company Limited.

323-1701-542
Standard Release 8.0 Issue 1
April 2005
Printed in Canada and the United Kingdom