J99343AK LSR (LSO) MTSRL37B

DATA SHEET

METALLIC FACILITY TERMINAL

The J99343AK loop signaling repeater (loop-start only) (LSR [LSO]) provides the regeneration of signals required for loop-start operation. This LSR unit extends the loop signaling range between the central office and the customer's location, or between a PBX and a station location.

For a detailed description of this unit, see Section 332-911-107, CD-7C050-01, and SD-7C050-01 (CPS 15). The set-up procedure is covered in Section 332-911-207. A block diagram is shown in Fig. 1. Figure 2 gives switch identification.

NOR·DRR Switch: This switch controls the ringing circuitry. In the NOR position, "ring-ping" signals and all distinctive ringing patterns will be reproduced. In the DRR position, the unit converts all ringing signals greater than 170 ms into 2-second ringing output and rejects ring-ping signals.

SWG BOR (IN·OUT) Switch: The switching side build-out resistor (BOR) is provided to limit the switching side loop current on short loops. In the IN position, the BOR is inserted in the A-side circuitry. In the OUT position, the BOR is removed from the circuit.

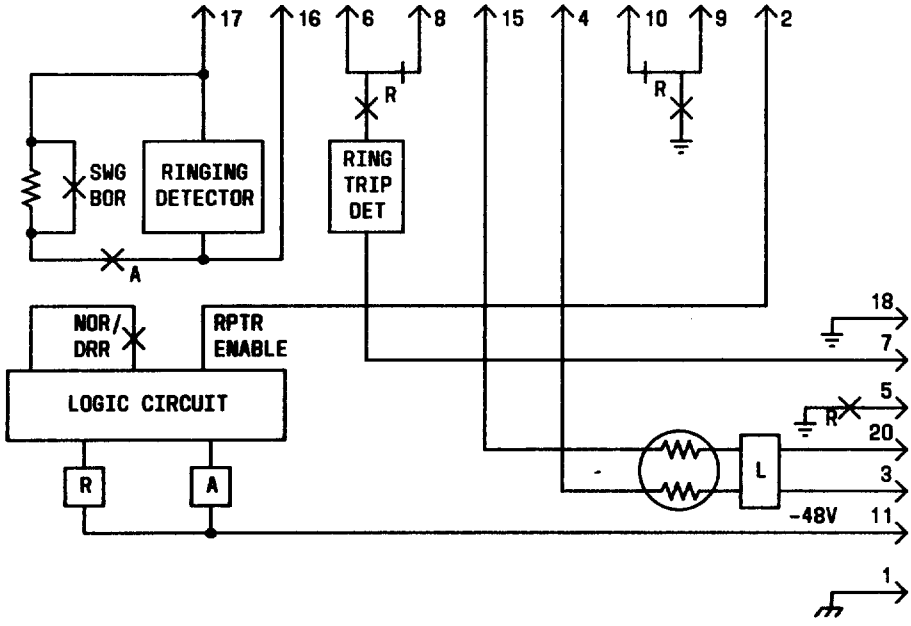

Fig. 1—Block Diagram of the J99343AK

NOTICE

Not for use or disclosure outside the
AT&T Companies except under written agreement

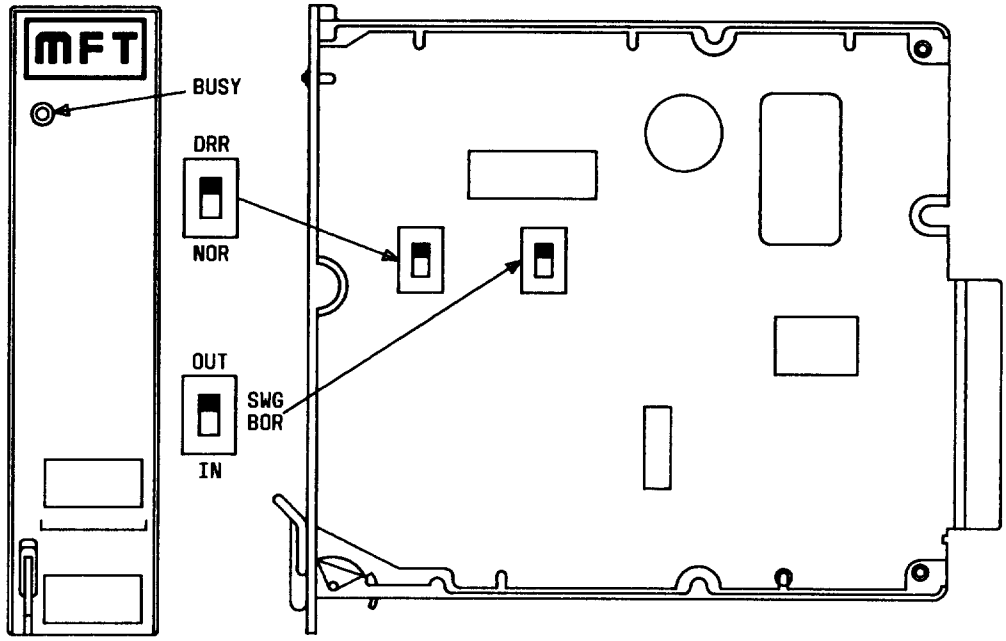

Fig. 2—J99343AK—Component Layout