Lucent Technologies
Bell Labs Innovations

DDM-2000 FiberReach Multiplexer Wideband/Narrowband Shelf TARP Release 3.0 and Later

User/Service Manual
Volume I

363-206-305
Issue 3
June 2000

Copyright © 1998 Lucent Technologies.
All Rights Reserved
Printed in U.S.A.

This material is protected by the copyright laws of the United States and other countries. It may not be reproduced, distributed or altered in any fashion by any entity, including other Lucent Technologies Business Units or Divisions, without the expressed written consent of the Customer Training and Information Products Organization.

For permission to reproduce or distribute, please contact:

Product Development Manager 1-888-LTINF06

Notice

Every effort was made to ensure that the information in this document was complete and accurate at the time of printing. However, information is subject to change.

Mandatory Customer Information

Interference Information: Part 15 of Federal Communications Commission (FCC) Rules.

NOTE: This equipment has been tested and found to comply with the limits for a Class A digital device, pursuant to Part 15 of the FCC Rules. These limits are designed to provide reasonable protection against harmful interference when the equipment is operated in a commercial environment. This equipment generates, uses, and can radiate radio frequency energy, and, if not installed and used in accordance with the instruction manual, may cause harmful interference to radio communications. Operation of this equipment in a residential area is likely to cause harmful interference in which case the user will be required to correct the interference at his own expense.

Security Statement

In rare instances, unauthorized individuals make connections to the telecommunications network through the use of remote access features. In such event, applicable tariffs require that the customer pay all network charges for traffic. Lucent Technologies cannot be responsible for such charges and will not make any allowance or give any credit for charges that result from unauthorized access.

Trademarks

5ESS, DACScan, LGX, Safari, SLC, ST, SPQ, and Western Electric are registered trademarks of Lucent Technologies.
LineReach is a trademark of Lucent Technologies.
ANSI is a registered trademark of American National Standards Institute, Inc.
Common Language is a registered trademark and CLEI, CLLI, CLCI, and CLFI are trademarks of Bell Communications Research, Inc.
Gateway 2000 is a registered trademark of Gateway 2000, Inc.
Hayes is a registered trademark, and V-Series is a trademark of Hayes Microcomputer Products, Inc.
HP is a registered trademark of Hewlett-Packard Company
Microsoft, MS-DOS and Windows NT are registered trademarks of Microsoft Corporation.
National Electrical Code is a registered trademark of the National Fire Protection Association, Inc.
NEC is a registered trademark of Nippon DenkiKabushiki Kaisha
NFPA is a registered trademark of National Fire Protection Association, Inc.
PairGain is a registered trademark of PairGain Technologies, Inc.
Paradyne and Safari are registered trademarks of AT&T.
Penril is a registered trademark of Penril Corporation.
PROCOMM is a registered trademark of Datastorm Technologies, Inc.
Raynet is a registered trademark of Raychem Corporation.
Rides is a registered trademark of Ericcson Raynet.
SUN is a registered trademark of SUN Microsystems, Inc. in the United States and other countries.
SPARC is a registered trademark of SPARC International, Inc. licensed exclusively to SUN Microsystems, Inc. All SPARC trademarks are used under license and are trademarks or registered trademarks of SPARC International, Inc. in the United States and other countries Products bearing SPARC trademarks are based upon an architecture developed by Sun Microsystems, Inc.
SPOTS CU is a registered trademark of AT&T.
Styrofoam is a registered trademark of The Dow Chemical Company
TITAN is a trademark of Tellabs, Inc.
Toshiba is a registered trademark of Kabushiki Kaisha Toshiba.
UL is a registered trademark of Underwriter's Laboratories.
UNIX is a registered trademark in the United States and other countries licensed exclusively through X/Open Company Limited.

Warranty

Lucent Technologies provides a 5-year limited warranty for this product. For more information, consult your local Account Executive.

Document Ordering Information

The ordering number for this document is 363-206-305. To order this document, call 1-888-582-3688. For more ordering information, refer to "How to Order Documents" in the Section "About this Document."

Customer Assistance and Technical Support

The Lucent Technologies Regional Technical Assistance Center (RTAC) provides a technical assistance telephone number which is monitored 24 hours a day. To receive technical assistance, simply call 1-800-225-RTAC.

Documentation Support Telephone Number

Lucent Technologies provides a telephone number for customers to report errors or to ask questions about the information in this document. The support telephone number is 1-800-645-6759 or 1-910-727-6681. To order documents, see “Document Ordering Information Products.

Developed by Lucent Technologies Network Systems Customer Training and Information Products.

How Are We Doing?

Title: *DDM-2000 FiberReach Multiplexer Wideband/Narrowband Shelf TARP Release 3 and Later User Service Manual - Volume I*

Identification No.: 363-206-305 Issue No.: 3 Date: June 2000

Lucent Technologies welcomes your feedback on this Customer Information Product (CIP). Your comments can be of great value in helping us improve our CIPs.

1. Please rate the effectiveness of this CIP in the following areas:

	Excellent	Good	Fair	Poor	Not Applicable
Ease of Use					//////////////////
Clarity					//////////////////
Completeness					//////////////////
Accuracy					//////////////////
Organization					//////////////////
Appearance					//////////////////
Examples					
Illustrations					
Overall Satisifaction					//////////////////

2. Please check the ways you feel we could improve this CIP.

❒ Improve the overview/introduction
❒ Improve the table of contents
❒ Improve the organization
❒ Include more figures
❒ Add more examples
❒ Add more detail
❒ Make it more concise/brief
❒ Add more step-by-step procedures/tutorials
❒ Add more troubleshooting information
❒ Make it less technical
❒ Add more/better quick reference aids
❒ Improve the index

Please provide details for the suggested improvement. _____

_____

3. What did you like most about this CIP?

_____

_____

4. Feel free to write any comments below or on an attached sheet.

_____

_____

_____

_____

If we may contact you concerning your comments, please complete the following:

Name: _____ Telephone Number: _____

Company/Organization: _____ Date: _____

Address: _____

When you have completed this form, please fold, tape and return to address on back
or Fax to: 910 727-3043.

---------- Do Not Cut — Fold Here And Tape ----------

Lucent Technologies
Bell Labs Innovations

NO POSTAGE
NECESSARY
IF MAILED
IN THE
UNITED STATES

BUSINESS REPLY MAIL

FIRST CLASS PERMIT NO. 1999 GREENSBORO, NC

POSTAGE WILL BE PAID BY ADDRESSEE

DOCUMENTATION SERVICES
2400 Reynolda Road
Winston-Salem, NC 27199-2029

How Are We Doing?

Title: *DDM-2000 FiberReach Multiplexer Wideband/Narrowband Shelf TARP Release 3 and Later User/Service Manual - Volume I*

Identification No.: 363-206-305 Issue No.: 3 Date: June 2000

Lucent Technologies welcomes your feedback on this Customer Information Product (CIP). Your comments can be of great value in helping us improve our CIPs.

1. Please rate the effectiveness of this CIP in the following areas:

	Excellent	Good	Fair	Poor	Not Applicable
Ease of Use					//////////////////
Clarity					//////////////////
Completeness					//////////////////
Accuracy					//////////////////
Organization					//////////////////
Appearance					//////////////////
Examples					
Illustrations					
Overall Satisifaction					//////////////////

2. Please check the ways you feel we could improve this CIP.

❒ Improve the overview/introduction
❒ Improve the table of contents
❒ Improve the organization
❒ Include more figures
❒ Add more examples
❒ Add more detail
❒ Make it more concise/brief
❒ Add more step-by-step procedures/tutorials
❒ Add more troubleshooting information
❒ Make it less technical
❒ Add more/better quick reference aids
❒ Improve the index

Please provide details for the suggested improvement. _____

_____

3. What did you like most about this CIP?

_____

_____

4. Feel free to write any comments below or on an attached sheet.

_____

_____

_____

_____

If we may contact you concerning your comments, please complete the following:

Name: _____ Telephone Number: _____

Company/Organization: _____ Date: _____

Address: _____

When you have completed this form, please fold, tape and return to address on back
or Fax to: 910 727-3043.

---------- Do Not Cut — Fold Here And Tape ----------

Lucent Technologies
Bell Labs Innovations

NO POSTAGE
NECESSARY
IF MAILED
IN THE
UNITED STATES

BUSINESS REPLY MAIL

FIRST CLASS PERMIT NO. 1999 GREENSBORO, NC

POSTAGE WILL BE PAID BY ADDRESSEE

DOCUMENTATION SERVICES
2400 Reynolda Road
Winston-Salem, NC 27199-2029

Contents

About This Document xli

- Purpose xli
- Intended Audiences xli
- Reason For Issue xlii
- Multi-Vendor OI xlii
- How to Use This Manual xliv
- Safety Instructions xlvi
  - Product Safety Labels xlvi
  - Lightwave Safety Guidelines xlvi
    - General Laser Information xlvi
    - Lasers and Eye Damage xlvii
    - Classification of Lasers xlvii
    - Lightwave Safety Precautions xlviii
    - Safety Precautions for Enclosed Systems xlviii
    - Safety Precautions for Unenclosed Systems l
  - DDM-2000 FiberReach T1EXT Lightning and Surge Protection Shelf, Model ED8C783-30 l
    - Important Safety Instructions l
  - Electrostatic Discharge (ESD) Considerations li
- Related Documentation lv
- Customer Technical Support (CTS) lxvi
- Engineering and Installation Services lxviii
  - Customer Technical Support Enhanced Services lxix
- Documentation Support lxix
- How to Order Documents lxx
  - Standing Orders lxxi
  - How to Comment on This Document lxxi
- Electronic Documentation lxxii

Contents

1 System Introduction 1-1

- Overview 1-1
- Lucent 2000 Product Family 1-1
- Basic Description of the SLC-2000 Access System 1-2
- Basic Description of the DDM-2000 FiberReach Multiplexer 1-3
- DDM-2000 FiberReach Releases 1-7
  - Release Descriptions 1-7

2 Applications 2-1

- Overview 2-1
- DDM-2000 FiberReach Applications Summary 2-1
  - Ring Topologies 2-3
    - OC-3 Path Switched Ring 2-5
    - OC-12 Path Switched Ring 2-7
- DDM-2000 FiberReach Network Topologies (OC-1) 2-9
- Basic Wideband Shelf Configurations 2-9
  - DS1 and T1 Services 2-9
    - Single-Homed Access via Backbone Ring 2-10
    - Dual-Homed Access via a Backbone Ring 2-13
    - Integration with Dual Wire Center Applications 2-14
    - Single Homing to Linear DDM-2000 OC-3 Networks 2-16
    - Stand-Alone OC-1 Ring/Hub Networks 2-17
- Enhanced Routing 2-20
    - OC-1 Ring Pass-Through 2-21
    - OC-1 Ring Hairpin Routing, Single-Homed 2-22
    - OC-1 Ring Hairpin Routing, Dual-Homed 2-23
    - Hairpin Local Drop Routing 2-24
- DDM-2000 FiberReach Network Topologies (OC-3 and OC-12) 2-25
  - 28-Type Optical Line Interface (28G-U/28G2-U) 2-25

Contents

Circuit Pack Overview 2-25

29-Type Optical Line Interface (29G-U/29H-U) 2-26

Circuit Pack Overview 2-26

DDM-2000 FiberReach Service Applications 2-28

LAN/WAN Data Networking: DS3 Data Services 2-28

High Data-rate Subscriber Line (HDSL) Application 2-32

DDM-2000 FiberReach Service Applications Using the 28G-Type OLIU (Release 2.2 — Non-TARP Release) 2-34

DDM-2000 FiberReach Service Applications Using the 28G-Type OLIU (Release 3.1, TARP) 2-39

Basic DS3 Cross-Connects 2-40

DDM-2000 FiberReach Service Applications Using the 29-Type OLIU (Release 4.0, TARP) 2-43

STS-3c 0X1 Optical Interface 2-45

- Basic Narrowband Shelf Configurations 2-48
- Integrated DS1, T1, and DS0 Services 2-54

Integrated Narrowband Business Carrier Access 2-54

Integrated DS1 Transport Configuration with SLC LineReach Access System 2-60

SONET Transport 2-60

- Intelligent Vehicle Highway System (IVHS) 2-62
- Teleprotection and Supervisory Control and Data Acquisition (SCADA) Communications for Electric Utilities 2-64

3 Shelf Descriptions and Configurations 3-1

- Overview 3-1
- DDM-2000 FiberReach Wideband Shelf 3-1

DDM-2000 FiberReach Multiplexer Carrier Assembly 3-9

DDM-2000 FiberReach Wall-Mount Distant Terminal 3-10

Wideband Shelf Plug-Ins 3-14

Lightning and Surge Secondary Protection Assembly for T1 Extensions and HDSL 3-15

Contents

- Shelf Configuration 3-16
  - DS1 Services Only 3-17
  - T1 Extensions Only 3-19
  - T1 Extensions and DS1 Service 3-22
  - HDSL Services 3-25
  - DS3 and DS1 Services 3-26
  - DS3 Interface (BBG4/BBG4B) 3-26
- Data Services Interface 3-28
  - STS-3c 0 X1 Application 3-30
- DDM-2000 FiberReach Narrowband Shelf 3-31
- Secured-Area Telecommunication Applications Cabinet (STAC) System 3-37
  - Construction 3-38
  - Reliability 3-38

4 Power 4-1

- Overview 4-1
- Introduction 4-1
- Wideband Shelf -48 V Battery Powering 4-1
  - Power Distribution 4-3
  - Wall Distant Terminal Powering for WBS and NBS 4-4
  - Wideband Shelf Transmission Circuit Packs 4-6
    - OLIU Circuit Packs 4-6
    - DS1/DS1PM Circuit Packs 4-6
    - Control Circuit Packs 4-6
- Narrowband Shelf –48 V Battery Powering 4-6
  - Other Power Options 4-8
  - Wall Distant Terminal Powering 4-9
  - Narrowband Shelf Transmission Circuit Packs 4-10
    - FHB2 Digital Signal Cross-Connect Backplane Interface Unit (DSXBIU) 4-10
    - AUA432 Power Converter Unit (PCU), BGW1 Power Supply Unit (PSU) 4-10

Contents

Ringing Generator Units (RGU) 4-11
AUA421 Channel and Drop Test Unit (CDTU) 4-12
LEDs 4-12
Power Minor Alarm 4-13
Power Distribution 4-14

5 Transmission and Synchronization 5-1

- Overview 5-1
- Transmission Interfaces 5-1
  - DS1 Transmission Interface 5-1
  - OC-1/OC-3/OC-12 Transmission Interface 5-1
  - T1 Transmission Interface 5-2
- Transmission and Architecture 5-2
  - Wideband Shelf Interfaces and Multiplexing 5-2
  - Wideband Shelf Protection Architectures 5-4
  - Narrowband Shelf Interfaces and Multiplexing 5-4
  - Wideband and Narrowband Shelf Integration 5-6
- Synchronization 5-7
  - Manual Timing Pack Switch 5-7
  - Subnetwork Configurations 5-7
    - Free Running/Line Timing 5-7
  - External Timing/Line Timing Configuration 5-9
  - Line Timing/Line Timing Configuration 5-11
  - Timing Distribution 5-12
- Synchronization Messaging 5-14
  - Applications 5-14
    - Automatic Synchronization Reconfiguration 5-14
  - Synchronization Provisioning Integrity 5-15
  - Feature Details and Options 5-15
  - Examples 5-17
  - Synchronization Reconfiguration in an Access Ring 5-17

Contents

6 Operations Interfaces 6-1

- Overview 6-1
- Craft Interface Terminals (CIT) 6-2
  - CIT Access 6-2
  - Using a PC as a CIT 6-6
  - Remote Access Using the DCC 6-6
  - CPro Graphical User Interface and Provisioning Tool 6-7
- User Panel 6-8
  - User Panel LEDs 6-10
  - FE SEL Pushbutton 6-10
  - ACO/TST Pushbutton 6-11
  - UPD/INIT Pushbutton 6-11
  - Pushbutton Combinations 6-12
- Equipment Indicators 6-12
  - FAULT Indicators 6-12
  - ACTIVE Indicators 6-13
- Office Alarms 6-13
- TL1/X.25 Interface 6-14
  - ITM SNC 6-15
- User-Definable Miscellaneous Discretes—Environmental Alarms and Controls 6-16

7 Circuit Pack Descriptions 7-1

- Overview 7-1
- Wideband Shelf - Introduction 7-1
- Control Circuit Packs 7-2
  - BBG8/BBG8B SYSCTL Circuit Pack Description 7-3
    - Purpose of Circuit 7-3
    - BBG8/BBG8B SYSCTL Faceplate Controls and Indicators 7-3
    - General Description of Operation 7-5

Contents

Detailed Description of Operation 7-5
BBG8/BBG8B SYSCTL Hardware Setting 7-8
BBG8/BBG8B SYSCTL Quick Reference Summary 7-9
ECC2 User Panel Circuit Pack Description 7-11
Purpose of Circuit 7-11
Faceplate Controls and Indicators 7-11
Detailed Description of Operation 7-13
■ Wideband Shelf - Transmission Circuit Packs 7-15
BBF1B DS1 Circuit Pack Description 7-15
Purpose of Circuit 7-15
DS1 Faceplate Indicator 7-15
General Description of Operation 7-16
Detailed Description of Operation 7-16
DS1 Hardware Settings 7-18
DS1 Quick Reference Summary 7-20
BBF3/BBF3B DS1PM Circuit Pack Description 7-22
Purpose of Circuit 7-22
DS1PM Faceplate Indicator 7-22
General Description of Operation 7-23
Detailed Description of Operation 7-23
DS1PM Hardware Settings 7-26
DS1PM Quick Reference Summary 7-28
177A Retainer Card Description 7-29
Purpose of Card 7-29
BBG4/BBG4B DS3 Circuit Pack Description 7-30
Purpose of Circuit 7-30
BBG4/BBG4B DS3 Faceplate Indicators 7-30
General Description of Operation 7-31
Detailed Description of Operation 7-31
BBG4/BBG4B DS3 Hardware Settings 7-35
BBG4/BBG4B DS3 Quick Reference Summary 7-36
BBF6 T1 EXT Circuit Pack Description 7-38
Purpose of Circuit 7-38
T1EXT Faceplate Indicator 7-38

Contents

General Description of Operation 7-39
Detailed Description of Operation 7-39
T1EXT Hardware Settings 7-43
T1EXT Quick Reference Summary 7-45
BBG19 DS3 Data Services Interface Circuit Pack Description 7-46
Purpose of Circuit 7-46
BBG19 DS3 Faceplate Indicators 7-46
General Description of Operation 7-47
Detailed Description of Operation 7-48
BBG19 DS3 Hardware Settings 7-51
BBG19 DS3 Quick Reference Summary 7-52
BBF8 High Data-Rate Digital Subscriber Line (HDSL) 7-54
Purpose of Circuit 7-54
HDSL Faceplate Indicator 7-54
General Description of Operation 7-55
Detailed Description of Operation 7-56
HDSL Quick Reference Summary 7-61
■ Transmission - Optical Interface 7-62
Universal Optical Connectors 7-62
Optical Interface Circuit Packs 7-64
22-Type OLIU Circuit Pack Descriptions 7-66
Purpose of Circuits 7-66
22-Type Faceplate Indicators 7-66
General Description of Operation 7-70
Detailed Description of Operation 7-70
22-Type OLIU Quick Reference Summary 7-73
26G2-U OLIU Circuit Pack Description 7-75
Purpose of Circuit 7-75
26G2-U OLIU Faceplate Indicators 7-75
General Description of Operation 7-77
Detailed Description of Operation 7-78
26G2-U OLIU Quick Reference Summary 7-81
28G-U/28G2-U OLIU Circuit Pack Description 7-82

Contents

Purpose of Circuit 7-82
28G-U/28G2-U OLIU Faceplate Indicators 7-82
General Description of Operation 7-84
Detailed Description of Operation 7-85
28G-U/28G2-U OLIU Quick Reference Summary 7-88
29G-U/29H-U OLIU Circuit Pack Description (Long Reach OC-12 Interface) 7-89
■ Narrowband Shelf - Introduction 7-91
Circuit Packs in the Narrowband Shelf 7-91
RGU Circuit Pack Description 7-92
RGU Faceplate Controls and Indicators 7-92
PCU Circuit Pack Description 7-92
PCU Faceplate Controls and Indicators 7-93
CDTU Circuit Pack Description 7-93
CDTU Faceplate Controls and Indicators 7-94
DSXBIU Circuit Pack Description 7-94
DSXBIU Faceplate Controls and Indicators 7-94
Channel Units in the Narrowband Shelves 7-96
Channel Unit Circuit Pack Descriptions 7-96

8 **Administration and Provisioning** 8-1
■ Overview 8-1
■ Wideband Shelf Administration 8-1
Version Recognition 8-1
Software Upgrades 8-2
Remote Software Download and Copy 8-2
Data Base Backup and Restoral 8-3
ITM SNC 8-4
Security 8-4
Enhanced Security Features 8-6
Software Compatibility 8-6
Controller Maintenance and Memory Administration 8-7
Controller Maintenance 8-7

Contents

Memory Administration 8-7
Service Affecting Actions 8-8
- DS-1/T1 Multiplexing and Mapping 8-9
- Wideband Shelf Provisioning 8-9
Default Provisioning 8-9
Remote Provisioning 8-10
Automatic Provisioning on Circuit Pack Replacement 8-10
Feature Packaging Provisioning 8-10
Open Systems Interconnection (OSI) Provisioning 8-10
Port State Provisioning 8-11
Channel State Provisioning 8-11
Line State Provisioning 8-12
AIS or Unequipped Provisioning 8-12
Data Communications Channel (DCC) Provisioning 8-12
Operations Interworking (OI) Provisioning 8-12
- Software Compatibility 8-14
NSAP Provisioning 8-16
TARP Provisioning 8-16
- Selectable Parameters 8-17
Switch Selectable Parameters 8-17
CIT Selectable Parameters 8-18
Performance Monitoring (PM) Parameters Provisionable via the CIT 8-22
- Cross-Connection Provisioning 8-22
Cross-Connection Types 8-23
Termination/Drop Cross-Connection 8-23
Add Drop Cross-Connection for DS3 8-27
Pass-Through Cross-Connection 8-28
Locked Cross-Connection 8-30
Manual Cross-Connection Procedure 8-35
OC-1 Path Protected Ring Application Example 8-35
Single-Homed Path-Switched Ring Example 8-38
Dual-Homed Path-Switched Ring Example 8-42

Contents

OC-1 Ring Pass-Through Example 8-44
Example Cross-Connections 8-45
OC-1 Ring Hairpin Routing, Single-Homed Example 8-46
Example Cross-Connections 8-47
OC-1 Ring Hairpin Routing, Dual-Homed Example 8-48
Example Cross-Connections 8-49
Hairpin Local Drop Routing Example 8-50
Example Cross-Connections 8-51
Cross-Connects for Release 3.1 and Later 8-52
Basic DS3 Cross-Connects 8-53
DS3 Locked Cross-Connects 8-54
STS-3c Cross-Connects 8-55
- Narrowband Administration and Provisioning 8-58
- Narrowband Shelf Administration 8-58
  - Software Downloads and Upgrades 8-58
  - Security 8-58
- Narrowband Shelf Provisioning 8-61
  - Channel Unit Provisioning 8-61

9 Maintenance Description 9-1

- Overview 9-1
  - Wideband Shelf Maintenance 9-1
    - Single-Ended Maintenance Philosophy 9-1
    - Three-Tiered Operations 9-3
  - User Panel and Faceplate LEDs (Operations Tier 1) 9-4
  - Craft Interface Terminal (CIT) (Operations Tier 2) 9-5
  - Operations System (OS) Interface (Operations Tier 3) 9-6
    - Miscellaneous Discretes 9-6
    - TL1/X.25 9-6

Contents

- Multi-Vendor OI 9-7
- Inservice Upgrades 9-10
- Maintenance Signaling 9-10
- Fault Detection, Isolation, and Reporting 9-13
  - Detection 9-13
  - Isolation 9-13
  - Reporting 9-13
- Protection Switching 9-14
  - Path Protection Switching (Path Switched Rings) 9-14
  - OC-3/OC-1 Ring Interworking 9-17
  - OC-3/OC-1 Path Switched Ring (0x1) 9-17
    - Single-Homed Interworking Application 9-18
    - Dual-Homed Ring Interworking Application 9-19
  - Status of ACTIVE LED on Rings 9-21
  - Low-Speed Equipment Protection 9-21
  - Synchronization Reference Protection 9-21
- Loopbacks 9-22
- Tests 9-23
  - Transmission Tests 9-23
  - Operations Interface Tests 9-23
- Performance Monitoring 9-23
  - VT Performance Monitoring 9-25
  - DS1 Performance Monitoring 9-25
  - DS3 Performance Monitoring 9-27
    - DS3 Path PM 9-27
    - DS3 Line 9-28
  - Performance Parameters 9-28
  - OC-1/OC-3/OC-12 Section Parameters 9-28
    - Performance Monitoring Enabling 9-28
    - Severely Errored Frame Seconds (SEFS) 9-29
  - OC-1/OC-3/OC-12 Line Parameters 9-29
    - Performance Monitoring Enabling 9-29
    - Line Coding Violations (B2 Parity) 9-29
    - Errored Seconds (ES) 9-29

Contents

Severely Errored Seconds (SES) 9-30
Unavailable Seconds (UAS) 9-30
Line Protection Switch Counts 9-30
STS Pointer Justification Count (PJC) 9-30
STS-1 Path Parameters 9-31
Performance Monitoring Enabling 9-31
STS-1 Path Coding Violations (B3 Parity) 9-31
Errored Seconds (ES) 9-31
Severely Errored Seconds (SES) 9-31
Unavailable Seconds (UAS) 9-31
VT1.5 Path Parameters 9-32
Performance Monitoring Enabling 9-32
Errored Seconds (ES) 9-32
Severely Errored Seconds (SES) 9-32
Unavailable Seconds (UAS) 9-33
DS1 Path Parameters 9-33
Performance Monitoring Enabling 9-33
Errored Seconds (ES) 9-33
CV-P Coding Violations 9-33
CV-PFE Coding Violations 9-33
Severely Errored Second (SES) 9-34
Unavailable Seconds (UAS) 9-34
DS3 Parameters 9-34
Performance Monitoring Enabling 9-34
DS3 Performance Monitoring (PM) 9-34
DS3 Path 9-35
DS3 Line 9-36
DS1 Line Parameters 9-37
ES-L Errored Seconds 9-37
Performance Monitoring Data Storage and Reports 9-37
Performance Monitoring During Failed Conditions 9-37
Performance Parameter Thresholds 9-37
Threshold Crossings Reported to OS 9-38
■ Reports 9-38

Contents

Alarms and Status Report 9-38
Provisioning Reports 9-38
Database Change Transmission to OS 9-39
Performance Monitoring Reports 9-39
TCA Summary Report 9-39
Performance Status Reports 9-39
Maintenance History Report 9-39
State Report 9-39
Path State Report 9-40
Equipment Report 9-40
Network Map Reports 9-40

10 Technical Specifications 10-1

- Overview 10-1
- DDM-2000 FiberReach Multiplexer Wideband Shelf Specifications10-1

External Transmission Interfaces 10-1
Electrical Interfaces 10-2
DS1 Low-Speed (BBF1B) 10-2
DS1PM Low-Speed (BBF3/BBF3B) 10-3
DS3 Low-Speed (BBG4/BBG4B) 10-5
DS3 Data Services Interface (BBG19) 10-7
T1 Carrier Low-Speed (BBF6 T1EXT) 10-8
HDSL Interface (BBF8) 10-11
Optical Interfaces 10-12
Lightguide Jumpers 10-12
Intra-office (IS-3) OC-3 Rate Interface (22D-U OLIUs) 10-13
Intermediate Reach OC-3 Interface (22F/22F-U/22F2-U OLIU) 10-17
Long Reach OC-3 Interface (22G-U/22G2-U/ 22G3-U/22G4-U OLIU) 10-18
Long Reach OC-1 Interface (26G2-U OLIU) 10-22

Contents

Long Reach OC-3 Interface (28G-U/28G2-U OLIU) 10-27
Long Reach OC-12 Interface (29G-U OLIU) 10-31
Long Reach OC-12 Interface (29H-U OLIU) 10-32
OC-3 Optical Interface Mixing 10-36
Plug-In Maintenance Sparing Guidelines 10-39
Universal Optical Connectors 10-42
SONET Overhead Bytes 10-44
Performance 10-44
Wander/Jitter 10-44
Signal Performance 10-44
Protection Switching 10-45
Transient Performance 10-46
Delay 10-46
Performance Monitoring 10-47
Signaling Mode 10-49
Digital Data Performance 10-49
Operations Interfaces 10-49
Craft Interface Terminal 10-49
Personal Computer Specifications for Software Download 10-50
Compatible Modems 10-51
CPro-2000 Graphical User Interface and Provisioning Tool 10-51
User Panel 10-52
Equipment Indicators 10-52
Office Alarms 10-53
User-Definable Miscellaneous Discrete Environmental Alarms and Controls 10-53
TL1/X.25 Interface 10-53
Lucent 2000 Product Family OI Specifications 10-53
Physical Specifications 10-54
Wideband Shelf Physical Characteristics 10-54
Network Bay and Cabinet Mounting 10-54
Environmental Specifications 10-55

Contents

Temperature and Humidity 10-55
EMC Requirements 10-55
Earthquake Requirements 10-55
Fire Resistance 10-55
Underwriters Laboratories (UL) 10-56
Canadian Standards Association 10-56
Power Requirements 10-56
Shelf Fuses 10-56
Power Dissipation 10-56
DDM-2000 FiberReach Multiplexer Reliability 10-59
Summary 10-59
Transmission Availability 10-59
Operation System Interface Availability 10-60
Optical Module Maintenance Objective 10-60
Infant Mortality 10-60
DDM-2000 FiberReach System Reliability Predictions 10-61
- DDM-2000 Narrowband Shelf Specifications 10-64
Physical Specifications 10-64
Narrowband Shelf Physical Characteristics 10-64
Power Requirements 10-64
Shelf Fuses 10-64
Power Dissipation 10-64
Terminal-to-Terminal Voice-Frequency Transmission 10-65

11 Commands and Reports 11-1

- Overview 11-1
- Command Page Format 11-1
- Addresses 11-3
- Special Control Characters 11-8
- DDM-2000 FiberReach Command Menu 11-11
- CPro-2000 11-16

Contents

- Commands 11-17
- RTRV-ALM Reports 11-394
- RTRV-HSTY Reports 11-415

A **A SONET Overview** A-1

- Overview A-1
- History A-1
- Basic Purpose A-2
- Technical Overview A-2
  - SONET Signal Hierarchy A-2
  - SONET Layers A-4
  - SONET Frame Structure A-6
  - Section Overhead A-6
  - Line Overhead A-7
  - Path Overhead A-8
    - STS-1 Path Overhead A-8
    - VT Path Overhead A-9
  - SONET Multiplexing Procedure A-10
  - SONET Demultiplexing Procedure A-12
  - SONET Digital Multiplexing Schemes A-14
    - Asynchronous Multiplexing A-14
    - Synchronous Multiplexing A-15
  - Virtual Tributary Signals A-15
  - Concatenated Mode A-16
- SONET Interface A-18
  - SONET Payloads A-18
  - Higher Rate Transport A-20
- Conclusion A-20

Glossary GL-1

Contents

Figures

About This Document

1 Safety Label Position on FiberReach Shelf xlix
2 Static Control Wrist Strap lii
3 Product Support lxvii

1 System Introduction

1-1 Example of DDM-2000 FiberReach Multiplexer in the Network 1-6

2 Applications

2-1 Path Switched Ring 2-4
2-2 OC-3 Path Switched Ring Using OC-3 Multiplexer and FiberReach Multiplexer With OC-3 Optics 2-6
2-3 OC-12 Path Switched Ring Using DDM-2000 OC-12, OC-3, and FiberReach Multiplexers With OC-12 Optics 2-8
2-4 DDM-2000 FiberReach Rings Single Homing to a DDM-2000 OC-3 Ring 2-11
2-5 DDM-2000 FiberReach Rings Single Homing to a DDM-2000 OC-12 Ring 2-12
2-6 DDM-2000 FiberReach Dual Homing to a DDM-2000 OC-3/OC-12 Ring 2-13
2-7 DDM-2000 FiberReach Ring Dual Homing to a DDM-2000 OC-3 Ring in a Dual Wire Center Application 2-14
2-8 DDM-2000 FiberReach Ring Dual Homing to a DDM-2000 OC-12 Ring in a Dual Wire Center Application 2-15
2-9 Single-Homed OC-1 Ring to a DDM-2000 OC-3 Linear Application 2-16
2-10 DDM-2000 FiberReach Stand-Alone OC-1 Ring 2-17

Figures

2-11	DDM-2000 FiberReach Single Homing to a Stand-Alone OC-1 Hub Host	2-18
2-12	Triple OC-1 Multiplexer Application	2-19
2-13	OC-1 Ring Pass-Through in a Function Unit	2-21
2-14	Single-Homed Hairpin Routing	2-22
2-15	Dual-Homed Hairpin Routing	2-23
2-16	Hairpin Local Drop Routing	2-24
2-17	OC-3 Ring Mixed Application	2-26
2-18	OC-12 Ring Mixed Application	2-27
2-19	LAN/WAN Data Networking Using Locked DS3 Cross-Connections	2-29
2-20	Unprotected DS3 Data Services using BBG19 Circuit Packs	2-30
2-21	Protected DS3 Data Services using BBG4B Circuit Packs	2-31
2-22	LAN/WAN Data Networking	2-32
2-23	HDSL Application	2-33
2-24	OC-3 Ring Mixed Application	2-34
2-25	OC-3 FiberReach Extension (Single-Homed) on OC-12 Ring Application	2-35
2-26	FiberReach Extension (Dual-Homed) on OC-12 Ring Application	2-36
2-27	OC-3 FiberReach Extension (Single-Homed) on OC-48 Ring Application	2-37
2-28	OC-3 FiberReach Extension (Dual-Homed) on OC-48 Ring Application	2-38
2-29	OC-3 Ring Mixed Application (Release 3.1 or Later)	2-39
2-30	OC-3 FiberReach Extension (Single-Homed) on OC-12 Ring Application (Release 3.1 or Later)	2-40
2-31	FiberReach Extension (Dual-Homed) on OC-12 Ring Application (Release 3.1 or Later)	2-41
2-32	OC-3 FiberReach Extension (Dual-Homed) on OC-48 Ring Application (Release 3.1 or Later)	2-42
2-33	OC-12 Ring Mixed Application	2-43
2-34	OC-3 FiberReach Extension (Dual-Homed) on OC-48 Ring Application (Release 4.0)	2-44

Figures

2-35 FiberReach OC-3c Extension on OC-12 Ring Application (Release 3.1 or Later) 2-46

2-36 STS-3c Dual 0X1 Application (Release 3.1 or Later) 2-47

2-37 SLC-2000 System Hosting a FiberReach NBS Through a Collocated WBS 2-49

2-38 SLC-2000 System Hosting a FiberReach NBS using 26G2-U OLIUs and a J1C265AA-1, L4 ARM Shelf 2-50

2-39 SLC-2000 System Hosting a FiberReach NBS using 26G2-U OLIUs and a J1C265AA-1, L4 ARM Shelf Provisioning DS1 Pipes Through a WBS 2-51

2-40 SLC-2000 ARM Shelf Hosting DDM-2000 FiberReach WBSs 2-53

2-41 DDM-2000 FiberReach Multiplexer Business Narrowband Application 2-55

2-42 DDM-2000 FiberReach Multiplexer Business Narrowband Application with a Remote SLC-2000 2-56

2-43 DDM-2000 FiberReach Multiplexer Dual-Homed Integrated Application 2-57

2-44 DDM-2000 FiberReach Multiplexer Stand-Alone Integrated Application 2-58

2-45 DDM-2000 FiberReach Multiplexer Low-Speed Traffic Application 2-59

2-46 DSX-1 Electrical Interface — SONET Transport (Integrated Configuration) 2-61

2-47 Intelligent Vehicle Highway System (IVHS) Application 2-63

2-48 DDM-2000 FiberReach Teleprotection and SCADA Communications 2-65

3 Shelf Descriptions and Configurations

3-1 DDM-2000 FiberReach Multiplexer Wideband Shelf — Front View 3-2

3-2 OC-1 Optics with BBG4B 3-2

Figures

3-3	OC-1 Optics with BBG19	3-3
3-4	DDM-2000 FiberReach Multiplexer Wideband Shelf — with BBG4B	3-3
3-5	DDM-2000 FiberReach Multiplexer Wideband Shelf — with BBG19	3-4
3-6	DDM-2000 FiberReach Multiplexer Wideband Shelf —with 22-Type	3-4
3-7	DDM-2000 FiberReach Multiplexer Wideband Shelf — with OC-12 Optics	3-5
3-8	DDM-2000 FiberReach Multiplexer Wideband Shelf — Rear View	3-6
3-9	DDM-2000 FiberReach Multiplexer Wideband Shelf Front Panel	3-8
3-10	DDM-2000 FiberReach Multiplexer Carrier Assembly	3-9
3-11	DDM-2000 FiberReach Multiplexer Carrier Assembly Group Configurations	3-10
3-12	DDM-2000 FiberReach Wall Mount Enclosure Options	3-11
3-13	DDM-2000 FiberReach Wall Mount Distant Terminal	3-12
3-14	Wall Mount Distant Terminal with SLC LineReach Shelf and DDM-2000 FiberReach Wideband Shelf	3-13
3-15	T1 Lightning and Surge Protection Assembly	3-15
3-16	DDM-2000 FiberReach 16 1x1 Protected DS1 Services Only	3-17
3-17	DDM-2000 FiberReach 1X7 Protected DS1 Services Only	3-18
3-18	DDM-2000 FiberReach Unprotected DS1 Services Only	3-19
3-19	DDM-2000 FiberReach with 1x1 Protected T1 Extension Services	3-20
3-20	DDM-2000 FiberReach with 1x7 Protected T1 Extension Services	3-21
3-21	DDM-2000 FiberReach with Unprotected T1 Extension Services	3-22

Figures

3-22 DDM-2000 FiberReach with Four 1x1 Protected T1 Extensions and Eight 1x1 Protected DS1 Services 3-23

3-23 DDM-2000 FiberReach with Unprotected T1 Extensions and 1x7 Protected DS1 Services 3-24

3-24 DDM-2000 FiberReach — 6 Unprotected HDSL Circuits (Unprotected) 3-25

3-25 DDM-2000 FiberReach — 1x2 Protected HDSL Services (1X2 Protection Mode) 3-26

3-26 DDM-2000 FiberReach with OC-12 Optics in Main Slot Providing DS1 and DS3 Services 3-27

3-27 DDM-2000 FiberReach with OC-1 Optics in Main Slot Providing DS3 Services 3-27

3-28 DDM-2000 FiberReach DS3 Data Services Application 3-28

3-29 DDM-2000 FiberReach with OC-1 Optics in Main Slot Providing Data Services 3-29

3-30 STS-3c 0 x 1 Application 3-30

3-31 DDM-2000 FiberReach Multiplexer Narrowband Shelf — Front View 3-32

3-32 DDM-2000 FiberReach Multiplexer Narrowband Shelf — Rear View 3-33

3-33 STAC System, FRC-2000 Module with Pedestal Battery Base 3-39

3-34 STAC System, FRC 2000 Module Wall Mount Option with Separate Pedestal Battery Module 3-40

4 Power

4-1 DDM-2000 FiberReach Multiplexer Wideband Shelf Power Architecture 4-2

4-2 Typical -48 Volt Power Supply for DDM-2000 FiberReach Multiplexer Single Shelf 4-3

4-3 Wall DT Powering (Power Supply for WBS/NBS) 4-4

4-4 Wall DT Powering (Single Power Supply for WBS/NBS) 4-5

4-5 DDM-2000 FiberReach Multiplexer Narrowband Shelf Power Architecture 4-7

Figures

4-6 DDM-2000 FiberReach Multiplexer — Other Power Options 4-8

4-7 Wall DT Powering (Power Supply for WB and Power Supply for NB) 4-9

4-8 AUA413 and AUA423 Ringing Generator Units 4-11

4-9 Circuit Pack Power and LED Control 4-13

4-10 Typical -48 Volt Power Supply for DDM-2000 FiberReach Multiplexer Single Shelf 4-14

5 Transmission and Synchronization

5-1 DDM-2000 FiberReach Wideband Shelf Block Diagram 5-3

5-2 DDM-2000 FiberReach Multiplexer Narrowband Architecture (Octet Mode Shown) 5-5

5-3 Free Running/Line Timing Synchronization in a Ring Configuration 5-8

5-4 External Timing in a Ring Configuration 5-10

5-5 Line Timing in a Ring Configuration 5-11

5-6 Timing from a Multiplexed DS1 5-13

5-7 Synchronization Failure and Reconfiguration 5-15

5-8 Synchronization Reconfiguration — Access Ring (Sheet 1 of 3) 5-18

6 Operations Interfaces

6-1 CIT Connectors (Direct Interface to CIT) 6-3

6-2 CIT Connectors (Modem Interface to CIT) 6-4

6-3 CIT Login Sessions 6-5

6-4 FiberReach Multiplexer User Panel 6-9

6-5 Miscellaneous Discretes 6-17

Figures

7 Circuit Pack Descriptions

7-1 BBG8 SYSCTL Circuit Pack 7-4
7-2 BBG8 SYSCTL Circuit Pack Block Diagram 7-6
7-3 BBG8/BBG8B SYSCTL Option Switches 7-8
7-4 DDM-2000 FiberReach Multiplexer ECC2 User Panel 7-12
7-5 ECC2 User Panel Block Diagram 7-14
7-6 BBF1B DS1 Circuit Pack 7-15
7-7 BBF1B DS1 Circuit Pack Block Diagram 7-17
7-8 BBF1B DS1 Option Switches 7-19
7-9 BBF3 DS1PM Circuit Pack 7-22
7-10 DS1PM Circuit Pack Block Diagram 7-24
7-11 BBF3 DS1PM Option Switches 7-26
7-12 177A Retainer Card 7-29
7-13 BBG4B DS3 Circuit Pack 7-30
7-14 BBG4/BBG4B DS3 Circuit Pack Block Diagram 7-32
7-15 BBG4/BBG4B DS3 Line Build-Out (LBO) Jumpers 7-35
7-16 BBF6 T1EXT Circuit Pack 7-38
7-17 T1EXT Circuit Pack Block Diagram 7-40
7-18 BBF6 T1EXT Option Switches 7-43
7-19 BBG19 DS3 Circuit Pack 7-46
7-20 BBG19 DS3 Circuit Pack Block Diagram 7-49
7-21 BBG19 DS3 Line Build-Out (LBO) Jumpers 7-51
7-22 BBF8 HDSL Circuit Pack 7-55
7-23 HDSL Circuit Pack Block Diagram 7-56
7-24 HDSL DIP Switch Settings 7-60
7-25 Universal Optical Connector 7-63
7-26 22D-U OLIU Circuit Pack 7-67
7-27 22F-U OLIU Circuit Pack 7-68
7-28 22G-U OLIU Circuit Pack 7-69
7-29 22-Type OLIU Circuit Pack Block Diagram 7-71
7-30 26G2-U OLIU Circuit Pack 7-76
7-31 26G2-U OLIU Circuit Pack Block Diagram 7-78

7-32 28G-U/28G2-U OLIU Circuit Pack — 28-Type Pair with Interconnect Cable Assembly 7-83
7-33 28G-U/28G2-U OLIU Circuit Pack Block Diagram 7-85
7-34 Optical System Interfaces (Points S and R) 7-90
7-35 Narrowband Shelf 7-91
7-36 AUA413 RGU Circuit Pack 7-92
7-37 AUA432 PCU Circuit Pack 7-93
7-38 AUA421 CDTU Circuit Pack 7-94
7-39 FHB2 DSXBIU Circuit Pack 7-95

8 Administration and Provisioning

8-1 Example OC-1 Ring Configuration Cross-Connections 8-36
8-2 Example Single-Homed Path-Switched Ring Configuration Cross-Connections 8-39
8-3 Example Dual-Homed Path-Switched Ring Configuration Cross-Connections 8-42
8-4 Example of OC-1 Ring Pass-Through Using Function Unit Slots of the OC-3 Shelf 8-44
8-5 Example of an OC-1 Ring Hairpin Routing, Single-Homed Configuration 8-46
8-6 Example of OC-1 Ring Hairpin Routing, Dual-Homed Configuration 8-48
8-7 Example of Hairpin Local Drop Routing Configuration 8-50
8-8 Protected DS3 Services 8-53
8-9 Unprotected (Locked) DS3 Data Services 8-54
8-10 STS-3c Cross-Connects 8-55
8-11 Locked (0x1) STS-3c - Broadband Services Using DDM-2000 OC-12 Multiplexer and FiberReach Equipped with 29G-Type OLIUs 8-57
8-12 Basic Octet Mode Configuration 8-62
8-13 Building an ISDN 2B+D Line from a DSX-1 Signal in the NBS (Octet Mode) 8-64
8-14 Actual NBS V-DT Configuration (Octet Mode) 8-65

Figures

8-15 Virtual Slot Concept (Octet Mode) 8-67

9 Maintenance Description

9-1 DDM-2000 FiberReach Wideband Shelf Single-Ended Operations Philosophy 9-2
9-2 Three-Tiered Operations 9-3
9-3 Example of Maintenance Signals as a Result of Unprotected Incoming OC-1 Failure for VT1.5 Ring Applications 9-11
9-4 Maintenance Signaling — VT Ring Application 9-12
9-5 Two-Fiber Unidirectional Ring 9-15
9-6 Path Protection Switching 9-16
9-7 Single-Homed Ring Interworking Application 9-18
9-8 Dual-Homed Ring Interworking Application 9-20
9-9 DS1/DS3 Line and Path and DS3 Path Performance Monitoring (PM) 9-24
9-10 DDM-2000 Multiplexer DS1 Path Performance Monitoring 9-26

10 Technical Specifications

10-1 T1EXT Span Powering 10-9
10-2 Optical System Interfaces (Points S and R) 10-23
10-3 Universal Optical Connector 10-43

11 Commands and Reports

11-1 DDM-2000 FiberReach Shelf with VT1.5 Signals 11-51
11-2 DS-1 Loopback 11-90
11-3 DS-3 Loopback 11-95

Figures

11-4	Automated Transmission Test of DS1 Signal in MUX Direction	11-377
11-5	Automated Transmission Test of DS1 Signal in DEMUX Direction	11-378
11-6	Automated Transmission Test of DS3 Signal in MUX Direction	11-383
11-7	Automated Transmission Test of DS3 Signal in DEMUX Direction	11-383

A A SONET Overview

A-1	SONET STS-1 Frame — Simplified Version	A-3
A-2	Section, Line, and Path Definitions	A-4
A-3	SONET Frame Format	A-5
A-4	VT Path Overhead Byte	A-9
A-5	SONET Multiplexing Procedure	A-11
A-6	SONET Demultiplexing Procedure	A-12
A-7	STS-1 Synchronous Payload Envelope in Interior of STS-1 Frame	A-13
A-8	Asynchronous Multiplexing	A-14
A-9	Synchronous Multiplexing	A-15
A-10	STS-3c Concatenated Payload	A-17
A-11	SONET Interface	A-18

Tables

3 Shelf Descriptions and Configurations

3-1 DDM-2000 FiberReach Wideband Shelf Plug-Ins 3-14

3-2 DDM-2000 FiberReach Narrowband Shelf Channel Unit 3-34

5 Transmission and Synchronization

5-1 Synchronization Messages Using K2 Byte 5-16

5-2 Synchronization Messages using S1 Byte 5-17

6 Operations Interfaces

6-1 DDM-2000 FiberReach Pushbutton Combinations 6-12

7 Circuit Pack Descriptions

7-1 DS1 Cable LBO Settings 7-19

7-2 DS1 Line Code Settings 7-20

7-3 DS1PM Cable LBO Settings 7-27

7-4 DS1PM Line Code Settings 7-27

7-5 T1EXT Cable LBO Settings 7-43

7-6 T1EXT Line Code Settings 7-44

7-7 HDSL Line Specifications 7-57

7-8 FiberReach OLIU Feature Summary 7-64

7-9 DDM-2000 FiberReach Narrowband Shelf Channel Unit Plug-Ins 7-96

8 Administration and Provisioning

8-1 OI Software Compatibility 8-13

Tables

8-2 Software Compatibility 8-14

8-3 Software and Circuit Pack Compatibility Matrix 8-15

8-4 Parameters Provisionable via Hardware Switches 8-17

8-5 DDM-2000 FiberReach Parameters Provisionable via the CIT 8-18

8-6 DDM-2000 FiberReach Manual VT1.5 Cross Connections (Termination/Drop) in a 1 x 1 Configuration 8-23

8-7 DDM-2000 FiberReach Manual VT1.5 Cross Connections (Termination/Drop) in a 1 x 7 Configuration 8-25

8-8 DDM-2000 FiberReach Manual STS-1 Cross Connections (Termination Drop Cross-Connections) 8-27

8-9 DDM-2000 FiberReach Manual VT1.5 Cross Connections (Pass-Through) 1 X 1 and 1 X 7 Configurations 8-28

8-10 DDM-2000 FiberReach Manual STS-1 Cross Connections (Pass-Through) 8-29

8-11 DDM-2000 FiberReach STS-3c 0 X 1 Cross-Connections 8-29

8-12 DDM-2000 FiberReach Manual VT1.5 Cross Connections (Locked) in a 1 x 1 Configuration 8-30

8-13 DDM-2000 FiberReach Manual VT1.5 Cross Connections (Locked) in a 1 x 7 Configuration 8-32

8-14 Channel Unit Slot Restriction When Using an SPQ494 in a Three-Slot V-DT 8-68

9 Maintenance Description

9-1 DS3 Performance Monitoring Enabling 9-35

9-2 DS3 Performance Monitoring (PM) Modes 9-36

10 Technical Specifications

10-1 Transmission Interface Standards 10-1

Tables

10-2	DS3 Interface Modes	10-5
10-3	Enhanced DS3 Performance Monitoring Modes	10-6
10-4	22D-U OLIU Specifications	10-14
10-5	22D-U OLIU Link Budgets (Note 1)	10-15
10-6	22F-Type and 22G-Type OLIU Specifications	10-19
10-7	22F-Type and 22G-Type OLIU Link Budgets	10-20
10-8	OC-3 OLIU Link Budget - Multimode Operation	10-21
10-9	26-Type OLIU Specifications	10-24
10-10	26-Type OLIU Link Budgets	10-25
10-11	26-Type OLIU Link Budgets - Multimode Operation	10-26
10-12	28-Type OLIU Specifications	10-28
10-13	28-Type OLIU Link Budgets.	10-29
10-14	OC-3 OLIU Link Budget - Multimode Operation	10-30
10-15	29G-U/29H-U OLIU Specifications	10-33
10-16	29G-U/29H-U OLIU Link Budgets (Notes)	10-34
10-17	OC-3 Rate OLIU Mixes - Minimum Link Budgets (dB)	10-36
10-18	OC-3 Rate OLIU Mixes - Maximum Link Budgets for SM Fiber (dB)	10-37
10-19	OC-3 Rate OLIU Mixes - Maximum Link Budgets for MM Fiber (dB)	10-38
10-20	Sparing Guidelines	10-39
10-21	Universal Buildout Attenuators	10-42
10-22	DDM-2000 OC-1 Transmission Delay in Microseconds	10-46
10-23	Performance Monitoring Parameters Provisionable via the CIT	10-47
10-24	CIT Interface Pin Connections	10-50
10-25	Power Dissipation - Wideband Shelf	10-57
10-26	DDM-2000 FiberReach System Reliability Prediction	10-61
10-27	DDM-2000 FiberReach Circuit Pack Reliability	10-62
10-28	Power Dissipation - Narrowband Shelf	10-64
10-29	Transmission Specifications - VF Channel Units with Fixed Settings	10-66

Tables

10-30 Transmission Specifications — Multiparty and FSR Channel Units 10-68

10-31 Transmission Specifications — AUA45 Dual Ringing Repeater Channel Unit 10-70

10-32 Transmission Specifications — VF Channel Units with Adjustable Settings 10-72

10-33 SPQ®400 Electrical and Transmission Specifications 10-74

10-34 SPQ®400 Environmental Specifications 10-76

10-35 SPQ®440 Electrical and Transmission Specifications 10-76

10-36 SPQ®440 Environmental Specifications 10-78

10-37 SPQ®909 Electrical and Transmission Specifications 10-79

10-38 SPQ®909 Environmental Specifications 10-81

11 Commands and Reports

11-1 DDM-2000 FiberReach Address Table 11-4

11-2 DDM-2000 FiberReach Command Menu 11-11

11-3 RTRV-ALM Descriptions 11-397

11-4 RTRV-HSTY Descriptions 11-417

A A SONET Overview

A-1 SONET Payloads A-19

A-2 SONET Transport Rates A-20

About This Document

Purpose

This *DDM-2000 FiberReach Multiplexer Wideband/Narrowband Shelf TARP Release 3.0 and Later User/Service Manual* covers Releases 3.0 and later and provides the following:

- Information concerning SLC Release 4.4 and later
- Detailed descriptive information to circuit pack level
- Description of application arrangements possible using the DDM-2000 FiberReach multiplexer with other members of the 2000 Product Family
- Technical specifications
- Commands and reports descriptions
- Operation and maintenance (O&M) task oriented practice (TOP) supporting acceptance, turnup, and maintenance tasks.

Intended Audiences

This manual is primarily intended for use by training and by the end users responsible for installing, operating, and maintaining the DDM-2000 FiberReach Multiplexer. It may be used by anyone desiring specific information about the DDM-2000 FiberReach Multiplexer operation and maintenance.

Reason For Issue

This document replaces the *DDM-2000 FiberReach Multiplexer Wideband/ Narrowband Shelf TARP Release 3.0 User/Service Manual, Volume I and Volume II, Issue 2*. Description, application, and engineering information has been updated/added to include FiberReach Multiplexer Release 4.0. Release descriptions are listed in Chapter 1, “System Introduction”.

Major changes in this issue are noted by bars (|) in the outermost margins. Major changes include adding information for the following:

- STS-3c 0X1 when shelf is equipped with 29G-U/29H-U OLIUs in Main slots and 22-type OLIUs in Function Unit slots
- DCC provisioning on Main slots for FiberReach to allow a remote shelf to interconnect through its Main ring interfaces with a 1+1 linear extension on a host OC-3, OC-12, or OC-48 shelf
- Provisioning of asynchronous CIT port to run TL1
- Remote alarm status using AGNE and Alarm Group concept
- 29G-U OLIU 1310 nm long reach OC-12 circuit packs
- 29H-U OLIU 1550 nm long reach OC-12 circuit packs
- 22G4-U OLIU 1310 nm long reach OC-3 circuit packs
- BBF6 T1EXT circuit pack with individual T1 facility loopback capabilities.

NOTE:
This manual covers software releases up to an including TARP Release 3.0 and later. The impact of introducing TARP affects many areas of the document. Be aware that both TARP and the Lucent Directory Services (LDS) protocol operations are discussed and that some operations and features available in pre-TARP releases will no longer be applicable in FiberReach Multiplexer Release 3.0 and later.

Multi-Vendor OI

To support multi-vendor OI, DDM-2000 FiberReach Release 3.0 and later supports Target ID Address Resolution Protocol (TARP) instead of Lucent Directory Service (LDS). DDM-2000 OC-3 R13.0 and later, OC-12 R7.0, and FT-2000 OC-48 R8.0 and later also support TARP; thus Lucent 2000 Product Family OI compatibility is still supported but not OI compatibility with previous releases of DDM-2000 and FT-2000. TARP is the established multi-vendor standard for SONET NEs that support TL1 OS interfaces.

DDM-2000 FiberReach Release 3.0 and later is developed to be compatible with any other-vendor NEs that also support TARP, OSI, and TL1/X.25 as specified in Telcordia Technologies GR-253. In addition, DDM-2000's TARP Manual Adjacency feature enables DDM-2000 to operate in networks that include CMISE-based NEs which may not support TARP propagation.

DDM-2000's compatibility with Tellabs' *TITAN* * 5500/S R5.0 DCS, including TL1/X.25 OS access with TITAN 5500/S DCS serving as the TL1/X.25 GNE, has been confirmed through cooperative joint testing. DDM-2000's compatibility with some other-vendor NEs has also been tested by independent third-parties such as Telcordia Technologies.

Because DDM-2000 FiberReach 3.0/3.1 releases are intended to facilitate OS-based centralized operations, and because TL1/X.25 OS access is the key standardized multi-vendor OI application, the following Remote NE Status features are not supported in DDM-2000 FiberReach Releases 3.0/3.1:

- Remote office alarms
- Remote CIT alarm reports
- Remote user panel indications
- TBOS
- Parallel telemetry.

All of the above features depend on the proprietary exchange of information among Lucent NEs in a subnetwork, specifically the communication of each remote NE's alarm status to other NEs. Although the Remote NE Status features were supported in previous releases of DDM-2000, such Lucent-only operations features in multi-vendor subnetworks would not include other-vendor NEs, due to the lack of applicable standards, and thus would be incomplete.

DDM-2000 FiberReach Release 4.0 supports the following Remote NE Status features:

- Remote office alarms
- Remote CIT alarm reports.

* *TITAN* is a trademark of Tellabs, Inc.

How to Use This Manual

This user/service manual is organized as follows:

- About This Document

  This chapter defines the purpose, scope, and intended audience for this document, provides introductory and support information on this document, lists related documentation and training courses, and tells how to obtain technical support on the system.

- Chapter 1, System Introduction

  This chapter introduces and provides a brief description of the DDM-2000 FiberReach Multiplexer.

- Chapter 2, Applications

  This chapter describes the network arrangement possibilities available when the DDM-2000 FiberReach Multiplexer is combined with other members of the Lucent 2000 Product Family.

- Chapter 3, Shelf Descriptions and Configurations

  This chapter contains a physical description of the DDM-2000 FiberReach Multiplexer shelf components and illustrates typical shelf configurations.

- Chapter 4, Power

  This chapter describes power distribution in the DDM-2000 FiberReach Multiplexer shelf.

- Chapter 5, Transmission and Synchronization

  This chapter describes the low-speed and high-speed transmission interfaces along with the various synchronization timing options.

- Chapter 6, Operations Interfaces

  This chapter describes the operations interfaces that support technician and provisioning access and alarm/status reporting.

- Chapter 7, Circuit Pack Descriptions

  This chapter provides a detailed functional description of the DDM-2000 FiberReach Multiplexer circuit packs.

- Chapter 8, Administration and Provisioning

  This chapter describes the administration and provisioning features of the DDM-2000 FiberReach Multiplexer.

- Chapter 9, Maintenance Description

  This chapter defines the maintenance philosophy that outlines the features available to monitor and maintain the DDM-2000 FiberReach Multiplexer.

- Chapter 10, Technical Specifications

  This chapter contains the technical specifications for the DDM-2000 FiberReach Multiplexer.

- Chapter 11, Commands and Reports

  This chapter provides a detailed description of the commands and reports that can be entered and received, respectively, at the ASCII terminal interface of the DDM-2000 FiberReach Multiplexer.

- Chapter 12, Operation and Maintenance TOP

  This chapter provides detailed procedures to support acceptance, turnup, operation, and maintenance of the DDM-2000 FiberReach Multiplexer. This chapter is divided into two sections - Wideband Shelf procedures and Narrowband Shelf procedures.

- Appendix A, SONET Overview

  This appendix provides a brief description of the Synchronous Optical Network (SONET).

- Glossary

  The glossary provides a brief definition of the abbreviations, acronyms, and certain terms found in this manual.

- Index

  The index provides an alphabetical listing of selected items and their corresponding page numbers.

Safety Instructions

Product Safety Labels

Important safety instructions are included in various sections of this manual. In addition to these instructions, there are other general safety instructions you must follow. These instructions involve lasers, lightwave optical cable and connectors, and precautions when handling circuit packs to prevent damage from electrostatic discharge. This manual also contains admonishments in the form of ***DANGERS, WARNINGS,*** and ***CAUTIONS*** which must be followed at all times.

These admonishments have the following definitions:

- ***DANGER*** indicates the presence of a hazard that *will* cause death or severe personal injury if the hazard is not avoided.
- ***WARNING*** indicates the presence of a hazard that *can* cause death or severe personal injury if the hazard is not avoided.
- ***CAUTION*** indicates the presence of a hazard that *will* or *can* cause minor personal injury or property damage if the hazard is not avoided. The caution is also used for property-damage-only accidents. This includes equipment damage, loss of software, or service interruption.

Other important safety instructions that you should read are in the "Operation and Maintenance TOP" section of this manual. Only trained personnel should perform the procedures in that section.

The alert symbol • appears throughout this product and in this manual to alert the user to the presence of important operating and maintenance (servicing) instructions for the DDM-2000 FiberReach Multiplexer.

Lightwave Safety Guidelines

General Laser Information

Lightwave/lightguide systems, their associated test sets, and similar operating systems use semiconductor laser transmitters that emit light at wavelengths between approximately 800 nanometers and 1600 nanometers. The emitted light is above the red end of the visible spectrum, which is normally not visible to the human eye. Although radiant energy at near-infrared wavelengths is officially designated invisible, some people can see the shorter wavelength energy even at power levels several orders of magnitude below any that have been shown to cause injury to the eye.

Conventional lasers can produce an intense beam of monochromatic light. The term monochromaticity means a single wavelength output of pure color that may be visible or invisible to the eye. A conventional laser produces a small-size beam of light, and because the beam size is small the power density (also called irradiance) is very high. Consequently, lasers and laser products are subject to federal and applicable state regulations as well as international standards for their safe operation.

A conventional laser beam expands very little over distance, or is said to be very well collimated. Thus, conventional laser irradiance remains relatively constant over distance. However, lasers used in lightwave systems have a large beam divergence, typically 10 to 20 degrees. Here, irradiance obeys the inverse square law (doubling the distance reduces the irradiance by a factor of 4) and rapidly decreases over distance.

Lasers and Eye Damage

Light energy emitted by laser and high-radiance LEDs in the 400-1400nm range my cause eye damage if absorbed by the retina. When a beam of light enters the eye, the eye magnifies and focuses the energy, magnifying the irradiance. The irradiance of energy that reaches the retina is approximately 10^5 or 100,000 times that at the cornea, and if sufficiently intense, may cause a retinal burn.

The damage mechanism at the wavelengths used in telecommunications is thermal in origin (that is, damage caused by heating). Therefore, a specific amount of energy is required for a definite time to heat an area of retinal tissue. Damage is not instantaneous. It occurs only when one looks at the light sufficiently long that the product of the retinal irradiance and the viewing time exceeds the damage threshold. Light energies above 1400 nm would cause surface and skin burns and do not affect the retinal area.

Classification of Lasers

Manufacturers of lasers and laser products in the U.S. are regulated by the Food and Drug Administration's Center for Devices and Radiological Health (FDA/CDRH) under 21 CFR 1040. These regulations require manufacturers to certify each laser or laser product as belonging to one of four major Classes — Class I, II, IIa, IIIa, IIIb, or IV. Lasers are classified according to the accessibly emission limits and their potential for causing injury. Lightwave systems are generally classified as Class I, because, under normal operation conditions, all energized laser transmitting circuit packs are terminated on optical fibers which enclose the laser energy with fiber sheath, forming a protective housing. Also, covers are in place over the circuit pack shelves.

Lightwave Safety Precautions

In its normal operating mode, a lightwave system is totally enclosed and presents no risk of eye injury. It is a Class I system under the FDA/CDRH scheme.

The lightguide cables that interconnect various components of a lightwave system can disconnect or break, and may expose people to lightwave emission. Also, certain measures and maintenance procedures may expose the technician to emission from the semiconductor laser during installation and servicing. Unlike more familiar laser devices, such as solid-state and gas lasers, the emission pattern of a semiconductor laser results in a highly divergent beam. In a divergent beam, the irradiance (power intensity) decreases rapidly with distance. The greater the distance, the less energy will enter the eye, and the less potential risk for eye injury.

Inadvertently viewing an unterminated fiber or damaged fiber with the unaided eye at distances greater than 5 to 6 inches normally will not cause eye injury provided the power in the fiber is less than a few mW at the shorter wavelengths and higher at the longer wavelengths. However, damage may occur if an optical instrument such as a microscope, magnifying glass, or eye loupe is used to stare at the energized fiber end.

CAUTION:
Use of controls or adjustments or performance of procedures other than those specified herein may result in hazardous laser radiation exposure.

Safety Precautions for Enclosed Systems

Under normal operating conditions, lightwave transmission systems are completely enclosed; nonetheless, the following precautions should be observed:

1. Because of the potential for eye damage, technicians should neither disconnect any lightwave cable nor splice and stare into the optical connectors terminating the cables.
2. Under no circumstances shall lightwave/lightguide operations be performed by a technician before satisfactorily completing an approved training course.
3. Since viewing lightwave emission directly with an optical instrument such as an eye loupe greatly increases the risk of eye damage, an appropriate safety label (Figure 1) must appear in plain view on the front of the main frame or lightguide termination/interconnection equipment. The label shall read as follows:

   NOTICE: UNTERMINATED OPTICAL CONNECTORS MAY EMIT LASER RADIATION. AVOID DIRECT EXPOSURE TO THE BEAM. DO NOT VIEW THIS BEAM WITH OPICAL INSTRUMENTS.

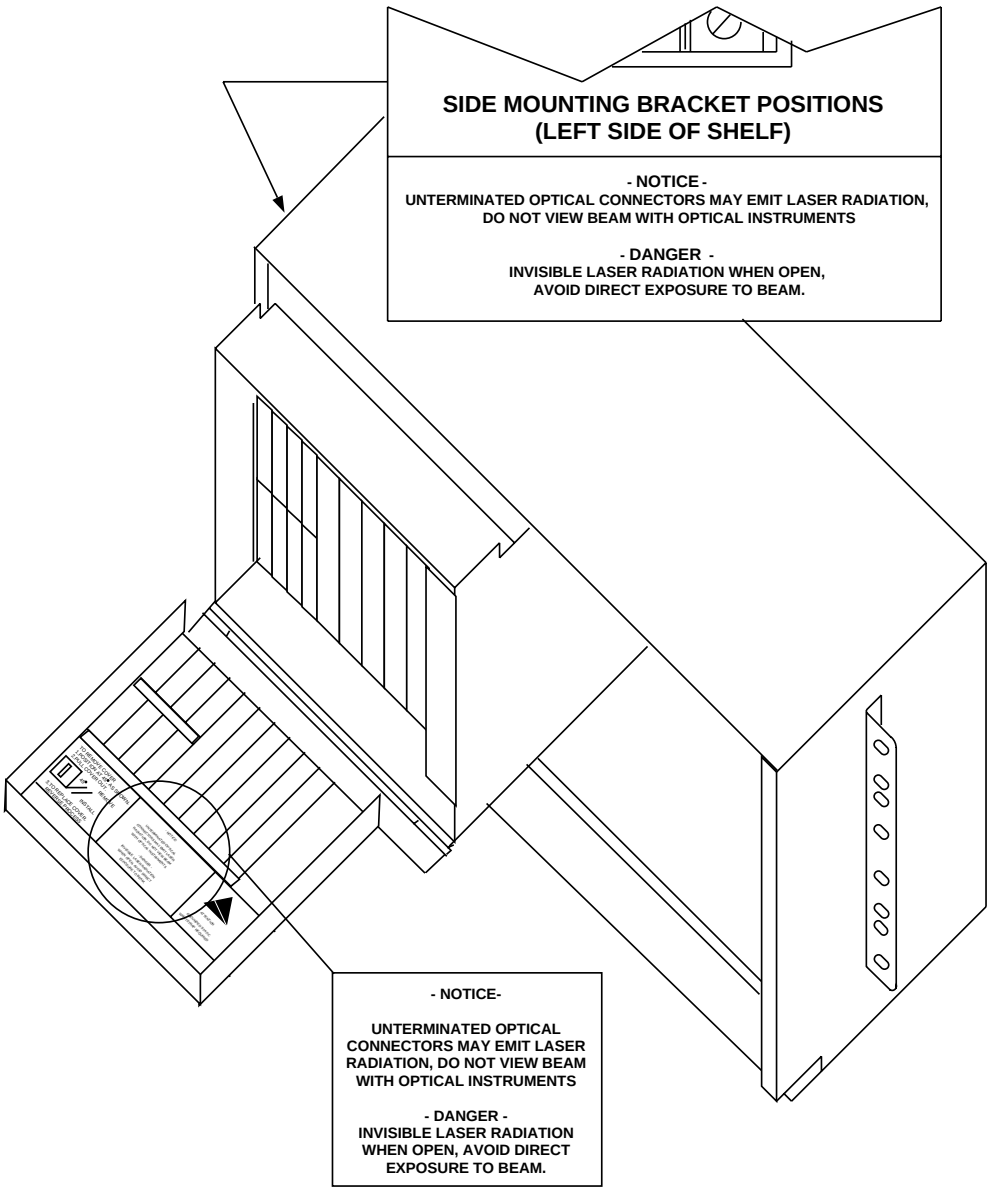

Figure 1. Safety Label Position on FiberReach Shelf

Safety Precautions for Unenclosed Systems

During service, maintenance, or restoration, a lightwave transmission system is considered unenclosed. Under these conditions, follow these practices:

1. Only authorized, trained personnel shall be permitted to do service, maintenance, and restoration. Avoid exposing the eye to emissions from unterminated, energized optical connectors at close distances. Connectors associated with lightwave regenerators are recessed, which limits exposure distance. However, technicians removing or replacing regenerators should not stare or look directly into the vacant regenerator slot with optical instruments or magnifying lenses. (Normal eye wear or indirect viewing instruments such as a FIND-R-SCOPE* are not considered magnifying lenses or optical instruments.)
2. Only authorized, trained personnel shall use the lightwave test equipment during installation or servicing since this equipment contains semiconductor lasers. (Some examples of lightguide test equipment are OTDR's, Hand-Held Loss Test Sets, and Feature Finders.)
3. Under no circumstances shall any personnel scan a fiber with an optical test set without verifying that all lightwave sources on the fiber are turned off.
4. All unauthorized personnel shall be excluded from the immediate area of lightwave transmission systems during installation and service.

Consult *ANSI*† Z136.1 American National Standard for Safe Use of Lasers for guidance on the safe use of lasers in the workplace.

DDM-2000 FiberReach T1EXT Lightning and Surge Protection Shelf, Model ED8C783-30

Important Safety Instructions

The exclamation point within an equilateral triangle is intended to alert the user to the presence of important operating and maintenance (servicing) instructions in the literature accompanying the product.

* Registered trademark of F. J. W. Industries, Inc.

† Registered trademark of American Standards Institute, Inc.

When using your telecommunications equipment, basic safety precautions should always be followed to reduce the risk of fire, electric shock, and injury to people, including the following:

1. Read and understand all instructions.
2. Follow all warnings and instructions marked on the product.
3. This product must be installed and serviced only by qualified service technicians.
4. CAUTION: This equipment is for installation with the DDM-2000 FiberReach Wideband Shelf only.
5. CAUTION: For continued protection against risk of fire, all fuses used in this product must be replaced with the same type and rating.
6. WARNING: Installation must include an independent frame ground drop to building ground.

SAVE THESE INSTRUCTIONS

Electrostatic Discharge (ESD) Considerations

CAUTION:
Industry experience has shown that all integrated circuit packs can be damaged by static electricity that builds up on work surfaces and personnel. The static charges are produced by various charging effects of movement and contact with other objects. Dry air allows greater static charges to accumulate. Higher potentials are measured in areas with low relative humidity, but potentials high enough to cause damage can occur anywhere.

The following precautions should be observed when handling circuit packs in order to prevent damage by electrostatic discharge:

- Assume all circuit packs contain solid state electronic components that can be damaged by ESD. Use only Lucent manufactured **UL***recognized circuit packs in this system.
- When handling circuit packs (storing, inserting, removing, etc.) or when working on the backplane, always wear a grounded wrist strap or wear a heel strap and stand on a grounded, static-dissipating floor mat. If a static-dissipating floor mat is used, be sure that it is clean.

* Registered trademark of Underwriters Laboratories, Inc.

- Handle all circuit packs by the faceplate or latch and by the top and bottom outermost edges. Never touch the components, conductors, or connector pins.
- Observe warning labels on bags and cartons. Whenever possible, do not remove circuit packs from antistatic packaging until ready to insert them into slots.
- If possible, open all circuit packs at a static-safe work position, using properly grounded wrist straps and static-dissipating table mats. If a static-dissipating table mat is used, be sure that it is clean.
- Always store and transport circuit packs in static-safe packaging. Shielding is not required unless specified.
- Keep all static-generating materials such as food wrappers, plastics, and Styrofoam* containers away from all circuit packs. Upon removal from the bay, immediately put circuit packs into static-safe packages.
- Whenever possible, maintain relative humidity above 20 percent.

To reduce the possibility of ESD damage, shelves are equipped with grounding jacks to enable personnel to ground themselves using wrist straps (Figure 2) while handling circuit packs or working on a shelf(s). The jacks for connection of wrist straps are located at the lower right-hand corner of each shelf and are labeled. When grounding jacks are not provided, an alligator clip adapter enables connection to bay frame ground.

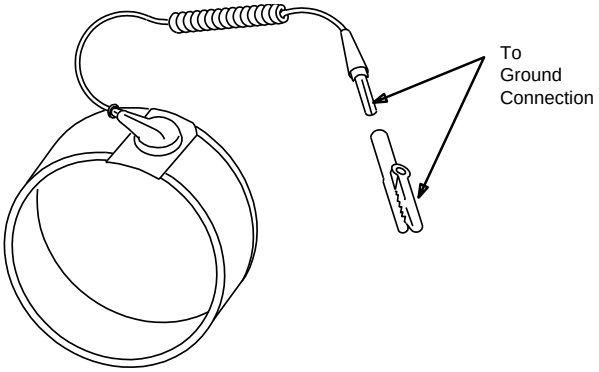

Figure 2. Static Control Wrist Strap

* Registered trademark of The Dow Chemical Company.

IMPORTANT SAFETY INSTRUCTIONS

1. Read and understand all instructions.
2. Follow all warnings and instructions marked on the product.
3. Do not place this product on an unstable cart, stand, or table. The product may fall, causing serious damage to the product.
4. Slots and openings in this product's back or bottom are provided for ventilation. To protect it from overheating, these openings must not be blocked or covered. This product should not be placed in a built-in installation unless proper ventilation is provided.
5. This product should be operated only from the type of power source indicated on the marking label. For information on proper electrical distribution and power requirements, refer to the "Power" and "Technical Specifications" sections of this user/service manual.
6. Never push objects of any kind into this product through cabinet slots as they may touch dangerous voltage points or short out parts that could result in a risk of fire or electrical shock. Never spill liquid of any kind on the product.
7. To reduce the risk of electrical shock, do not disassemble this product. Service should be performed by trained personnel only. Opening or removing covers and/or circuit packs may expose you to dangerous voltages or other risks. Incorrect reassembly can cause electrical shock when the unit is subsequently used.
8. ***Caution: Disconnect three (3) power connections when removing power from the system.***
9. Use only Lucent manufactured *UL* recognized circuit packs in this system. Recognized circuit packs are listed in this user/service manual.

SAVE THESE INSTRUCTIONS.

IMPORTANT INSTALLATION SAFETY INSTRUCTIONS

1. Read and understand all instructions.
2. Installation and maintenance procedures must be followed and performed by trained personnel only.
3. All DS1 and T1 extension interfaces should not leave the building premises unless connected to telecommunication devices providing primary or secondary protection, as applicable.
4. For information on proper mounting instructions, consult LTP 363-206-310, *DDM-2000 OC-3 FiberReach Installation Manual*.
5. Never install telecommunication wiring during a lightning storm.
6. Never install telecommunication connections in wet locations.
7. Never touch uninsulated telecommunication wires or terminals unless the telecommunication line has been disconnected at the DS1 interface.
8. Use caution when installing or modifying telecommunication lines.

SAVE THESE INSTRUCTIONS.

Related Documentation

The following documents provide additional information about the DDM-2000 Multiplexers:

- Number: 363-206-200

  Title: *DDM-2000 Multiplexer Applications, Planning, and Ordering Guide*

  Audience: Network planners, equipment engineers, and sales teams

  Content: Features, applications, high-level description, operations, administration, maintenance, planning, ordering, product support, reliability information, technical specifications, and a synchronous optical network (SONET) overview.

- Number: 363-206-201

  Title: *DDM-2000 OC-3 Multiplexer, System Commands Quick Reference*

  Audience: Maintenance personnel

  Content: Abbreviated list of system commands and parameters

- Number: 363-206-202

  Title: *DDM-2000 OC-3 Multiplexer User/Service Manual, Volumes I and II*

  Audience: Maintenance personnel

  Content: Detailed description, technical specifications, commands and reports (Volume I); operations and maintenance procedures (Volume II). This manual covers information on Software Releases 2 through 7.2.

- Number: 363-206-204

  Title: *DDM-2000 OC-3 Multiplexer Installation Manual*

  Audience: Customers planning to install the equipment

  Content: Customer installation instructions

- Number: 363-206-206

  Title: *DDM-2000 OC-12 Multiplexer — System Commands Quick Reference*

  Audience: Maintenance personnel

  Content: Abbreviated list of system commands and parameters

- Number: 363-206-207

  Title: *DDM-2000 OC-12 Multiplexer User/Service Manual*

  Audience: Maintenance personnel

  Content: Detailed description, technical specifications, commands and reports, and operations and maintenance procedures. This manual covers information pertaining to OC-12 Software Releases 1.0 through 3.2.

- Number: 363-206-208

  Title: *DDM-2000 OC-12 Multiplexer Installation Manual*

  Audience: Customers planning to install the equipment

  Content: Customer installation instructions

- Number: 363-206-220

  Title: *DDM-2000 OC-3/OC-12 Multiplexer Circuit Pack Options Job Aid*

  Audience: Maintenance personnel

  Content: List of circuit pack options

- Number: 363-206-222

  Title: *DDM-2000 OC-3/OC-12 Multiplexer Acceptance Task List Job Aid*

  Audience: Maintenance personnel

  Content: Check list of acceptance and turnup procedures

- Number: 363-206-285

  Title: *DDM-2000 OC-3 Multiplexer User/Service Manual, Volumes I and II*

  Audience: Maintenance personnel

  Content: Detailed description, technical specifications, commands and reports (Volume I); operations and maintenance procedures (Volume II). This manual covers information pertaining to OC-3 Software Releases 13.0 and later.

- Number: 363-206-290

  Title: *DDM-2000 OC-12 Multiplexer User/Service Manual, Volumes I and II*

  Audience: Maintenance personnel

  Content: Detailed description, technical specifications, commands and reports (Volume I); operations and maintenance procedures (Volume II). This manual covers information pertaining to OC-12 Software Releases 5.0 and later.

- Number: 363-206-295

  Title: *DDM-2000 OC-12 Multiplexer User/Service Manual, Volumes I and II*

  Audience: Maintenance personnel

  Content: Detailed description, technical specifications, commands and reports (Volume I); operations and maintenance procedures (Volume II). This manual covers information pertaining to OC-12 Software Releases 7.0 and later.

- Number: 363-206-300

  Title: *DDM-2000 FiberReach Multiplexer Applications, Planning, and Ordering Guide*

  Audience: Network planners, equipment engineers, and sales teams

  Content: Features, applications, high-level description, operations, administration, maintenance, and provisioning (OAM&P), system planning, ordering, product support, reliability information, technical specifications, and a synchronous optical network (SONET) overview

- Number: 363-206-310

  Title: *DDM-2000 FiberReach Multiplexer Installation Manual*

  Audience: Installation and maintenance personnel

  Content: Customer installation instructions

- Number: 824-102-151

  Title: *DDM-2000 Multiplexers Operations Systems Engineering Guide*

  Audience: Engineers

  Content: Operations systems engineering information for the DDM-2000 OC-3, OC-12, and FiberReach Multiplexers

The following documents provide information about CPro-2000:

- Number: 365-523-110 (Manual only)
  Number: 365-523-111 (Manual and Software)

  Title: *CPro-2000 User Manual*, Release 5.0

  Audience: Customers, engineers, maintenance personnel

  Content: Operations information for CPro-2000 software tool to provision and maintain networks

- Number: 365-523-120 (Manual only)
  Number: 365-523-121 (Manual and Software)

  Title: *CPro-2000 User Manual*, Release 6.0

  Audience: Customers, engineers, maintenance personnel

  Content: Operations information for the CPro-2000 software tool to provision and maintain networks

- Number: 365-576-140 (User Manual only) Release 8.0
  Number: 365-576-141 (User Manual and Software) Release 8.0

  Title: *CPro-2000 User Manual*

  Audience: Maintenance personnel

  Content: Using the tool to provision and maintain ring networks

- Number: 365-576-150 (User Manual only) Release 9.0
  Number: 365-576-151 (User Manual and Software) Release 9.0

  Title: *CPro-2000 User Manual*

  Audience: Maintenance personnel

  Content: Using the tool to provision and maintain ring networks

- Number: 365-576-160 (User Manual only) Release 10.0
  Number: 365-576-161 (User Manual and Software) Release 10.0

  Title: *CPro-2000 User Manual*

  Audience: Maintenance personnel

  Content: Using the tool to provision and maintain ring networks

The following documents provide information about ITM SNC:

- Number: 107-564-270

  Title: *ITM SNC Users Guide*

  Audience: Operations personnel

  Content: Integrated Transport Management Subnetwork Controller information (Release 6.0 and earlier)

- Number: 190-223-100

  Title: *ITM SNC Users Guide*

  Audience: Operations personnel

  Content: Integrated Transport Management Subnetwork Controller information (Release 8.0 and later)

The following documents provide information about Operations Interworking:

- Number: 824-102-144

  Title: *Lucent Technologies 2000 Product Family Multi-Vendor Operations Interworking Guide*

  Audience: System Planners and Engineers

  Content: Operations interworking information for the Lucent Technologies Product Family 2000 systems, including DDM-2000 Multiplexers and FT-2000 OC-48 Lightwave Systems in multi-vendor subnetworks

- Number: 824-102-147

  Title: *Lucent Technologies 2000 Product Family Operations Interworking Guide*

  Audience: System Planners and Engineers

  Content: Operations interworking information for the Lucent Technologies Product Family 2000 systems, including DDM-2000 Multiplexers and FT-2000 OC-48 Lightwave Systems

The following documents provide information about the *SLC*®-2000 Access System:

- Number: 363-205-004

  Title: *SLC-2000 Multi-Services Distant Terminal (MSDT) Feature, User/ Service and Ordering Manual*

  Audience: Engineers, installers, administrators, operation and maintenance personnel, and technical support

  Content: Applications, physical and functional description, administration, powering, technical specifications, construction and installation, and operation and maintenance [in task- oriented practice (TOP format)]. This document also contains ordering information for the MSDT.

- Number: 363-208-000

  Title: *SLC-2000 Access System, Applications, Planning, and Ordering Guide*

  Audience: Network planners, equipment engineers, and sales teams

  Content: Features, applications, high-level description, operations, administration, maintenance, planning, ordering, product support, reliability information, technical specifications, and a synchronous optical network (SONET) overview

- Number: 363-208-001

  Title: *SLC-2000 Access System, User/Service Manual*

  Audience: Installers, technicians, engineers, and troubleshooters

  Content: System overview, system description, introduction to system interface, administration and provisioning, operations and maintenance, and maintenance support procedures (in TOP format), and maintenance support information (alarm tables, etc.)

- Number: 363-208-003

  Title: *SLC-2000 Access System, Command and Message/Service Manual*

  Audience: Installers, technicians, engineers, and troubleshooters

  Content: A tutorial on system commands and messages, as well as detailed information about system commands in manual-page format. The document pages are organized by user interface panel (UIP) commands and craft interface terminal (CIT) commands.

- Number: 363-208-010

  Title: *SLC-2000 Access System, Customer Assembly Manual for RT Frames*

  Audience: Customers that plan to install the equipment

  Content: Configuration drawings and detailed instructions for ordering, installing, assembling, and connecting the equipment in a remote terminal (RT) frame arrangement. This document also includes installation procedures, cabling and wiring diagrams, application schematic diagrams (SDs), parts lists, and supporting information. Shelf assembly, cable routing, and frame installation are provided.

- Number: 363-208-011

  Title: *SLC-2000 Access System, Customer Assembly Manual for COT Frames*

  Audience: Customers that plan to install the equipment

  Content: Configuration drawings and detailed instructions for ordering, installing, assembling, and connecting the equipment in a Central Office Terminal (COT) frame arrangement. This document also includes installation procedures, cabling and wiring diagrams, the application schematic diagrams (SDs), a parts list, and supporting information. Shelf assembly, cable routing, and frame installation are provided.

- Number: 363-208-029

  Title: *SLC-*2000 *Access System, Software Release Description - Release 4.07.00: Issue 1*

  Audience: Installers, technicians, engineers, and troubleshooters

  Content: Provides information about the software release and procedures for implementation. Describes the features and capabilities provided in the release. Lists operating issues from the previous release that have been resolved, the operating issues in this release, and work-arounds.

The following documents provide information about the *SLC* LineReach Access System:

- Number: 363-208-400

  Title: *SLC LineReach Access System Applications, Planning, and Ordering Guide*

  Audience: Network planners, equipment engineers, and sales teams

  Content: Features, applications, high-level description, operations, administration, maintenance, planning, ordering, product support, reliability information, and technical specifications

- Number: 363-208-401

  Title: *SLC LineReach Access System User/Service Manual*

  Audience: Installers, technicians, engineers, and troubleshooters

  Content: System overview, system description, administration and provisioning, operations and maintenance, and maintenance support procedures (in TOP format), and turnup and test procedures

- Number: 363-208-402

  Title: *SLC LineReach Access System Installation Manual*

  Audience: Installation and maintenance personnel

  Content: Customer installation instructions

DDM-2000 FiberReach Drawings

ED-8C762-20	DDM-2000 FiberReach Cable Assemblies
ED-8C762-30	DDM-2000 FiberReach Wideband Shelf
ED-8C843-30	DDM-2000 FiberReach Shelf Carrier Assembly
ED-8C785-20	DDM-2000 FiberReach Cable Assemblies
ED-8C785-30	DDM-2000 FiberReach Narrowband Shelf
ED-8C843-31	DDM-2000 FiberReach Wall DT Unit
ED-8C843-32	DDM-2000 FiberReach LGX Panel
ED-8C843-34	DDM-2000 FiberReach Release 2.0 Software
ED-8C843-35	DDM-2000 FiberReach Release 3.0 Software
108680224	DDM-2000 FiberReach Release 4.0 Software
ED-8C852-30	DDM-2000 DS1 Interconnect Panel
SD-7C516-01	Application Schematic

DDM-2000 OC-3 Drawings

ED-8C724-10	OC-3 and OC-3/OC-12 Combined Bay Arrangements
ED-8C724-15	Cabling Plan (Rear Access)
ED-8C724-16	Cabling Plan (Front Access)
ED-8C724-20	Cable Assemblies
ED-8C724-21	Cable Assemblies
ED-8C724-22	Cable Assemblies
ED-8C724-30	DDM-2000 Shelf Assembly
ED-8C724-31	User Panel Assembly
ED-8C724-34	OC-3 Releases 2 and 3 Software Ordering
ED-8C724-36	OC-3 Release 5 Software Ordering
ED-8C724-37	OC-3 Release 6 Software Ordering
ED-8C724-38	OC-3 Release 7 Software Ordering
ED-8C724-39	OC-3 Release 8 Software Ordering
ED-8C724-41	OC-3 Release 11 Software Ordering
ED-8C724-42	OC-3 Release 13 Software Ordering
ED-8C724-43	OC-3 Release 15 Software Ordering
108680133	OC-3 Release 15 Initial Diskette plus SWRD
ED-8C733-30	Fan, Filter, and Baffle Assemblies
SD-7C510-01	Application Schematic
T7C510-31	Interconnect Wiring (Rear Access)
T7C510-32	Interconnect Wiring (Front Access)
801-525-168	Floor Plan Data Sheets

DDM-2000 OC-12 Drawings

ED-8C724-10	OC-3 and OC-3/OC-12 Combined Bay Arrangements
ED-8C727-10	Typical Bay Arrangements
ED-8C727-15	Cabling Plan (Rear Access)
ED-8C727-16	Cabling Plan (Front Access)
ED-8C727-20	Cable Assemblies
ED-8C727-21	Cable Assemblies
ED-8C727-30	DDM-2000 Shelf Assembly
ED-8C727-31	User Panel Assembly
ED-8C727-37	OC-12 Release 7 Software Ordering
SD-7C513-01	Application Schematic
T7C513-31	Interconnect Wiring Diagram (Rear Access)
T7C513-32	Interconnect Wiring Diagram (Front Access)
801-525-168	Floor Plan Data Sheets

DDM-2000 equipment is also available in traditional loop enclosure arrangements, descriptions of which may be found in the following Lucent Technologies practices:

- Number: 363-205-000

  Title: *SLC Series 5 Carrier System Ordering Guide — Loop Transmission Systems* (to be replaced by 363-205-010)

- Number: 363-205-010

  Title: *SLC Series 5 System Applications and Planning Guide*

- Number: 626-500-128

  Title: *51A-type Cabinets Ordering Information and Lettering Guide* — for DDM-2000 FiberReach Wideband Shelves and ***SLC*** *Series 5 Carrier Systems*

- Number: 640-250-289

  Title: *51A-type Cabinets Ordering Information and Lettering Guide* — for DDM-2000 FiberReach Wideband Shelves and DDM Plus

- Number: 640-030-205

  Title: *61B-type Cabinets Ordering Information and Lettering Guide* — for DDM-2000 FiberReach Wideband and Narrowband Shelves

- Number: 626-500-105

  Title: *80-type Cabinets Ordering Information and Lettering Guide*

- Number: 626-500-115

  Title: *90-type Cabinets Coding and Ordering Information*

The following documents provide additional information about related equipment:

- Number: 365-303-102

  Title: *DSX-3 Cross-Connect Bay, Description, Operation, and Maintenance Manual*

- Number: 365-301-130

  Title: *System III DSX-3/4, Planning, Engineering, Installation, and Operation - System Reference Guide*

- Number: 365-331-000

  Title: *DACS III-2000 Release 2.0 Applications, Planning, and Ordering Guide*

- Number: 365-340-800

  Title: *DACS IV-2000 Release 5.0 Reference Manual*

- Number: 365-575-100

  Title: *FT-2000 OC-48 Lightwave System Application, Planning, and Ordering Guide*

- Number: 636-299-120

  Title: **LGX**® *Distribution System, Planning, Engineering, Installation, and Operation System Reference Guide*.

- Title: MegaStar* 2000 Documents

  Comcode 107585648 - *Installation Manual*

  Comcode 407397512 - *Schematic Package*

  Comcode 107585655 - *Reference Manual*

  Comcode 107585671 - *System Application Manual*

* Registered trademark of Harris Corporation.

Customer Technical Support (CTS)

CTS is available through a toll-free technical assistance number. Lucent maintains a highly-skilled, multi-tier support structure consisting of regional engineers, product specialists, and system designers to support your network equipment. All levels of technical expertise may be called upon to solve the customer problem (refer to Figure 3).

The CTS organization provides remote, diagnostic support. On-site assistance is available on a billable contract or time and material basis. Support services may include the following activities:

- Responding to all requests for assistance
- Tracking and maintaining visible ownership of all reported problems, from inception through resolution
- Analyzing and diagnosing reported problems
- Providing restoration and recovery service
- Providing preventive and/or circumvention measures
- Communicating the actions, plans, and problem status to the reporting customer
- Initiating action to establish Modification Requests (MRs) for design issues
- Writing and distributing technical bulletins (Urgent Problem Notification).

CTS services are available on a contract basis in three levels to meet varying customer needs: Preferred, Standard, and Basic Agreements. The Preferred level of support guarantees 24 x 7 (24 hour, 7 day-a-week) coverage of the customer's network. Guaranteed performance commitments for response, service restoration, and problem resolution times are validated by published Service Performance Reports. The Standard level of support guarantees 8 x 5 (8 hour, 5 day-a-week) coverage. Performance commitments are also validated by Service Performance Reports. Out-of-hours support is available for an additional fee. The Basic level of support guarantees 8 x 5 coverage with hourly billing for each support call. Out-of-hours coverage is available with additional fees.

When the customer experiences a problem, the initial point of contact within Lucent is the Regional Technical Assistance Center (RTAC). RTAC is divided into three regions covering North America: region East (includes Canada), region South, and region West. They can be reached by calling 1-800-CAL-RTAC (1-800-225-7822). Lucent works with the customer to define the problem and determine its severity. Problems are worked during the customer's contracted coverage period. By prior agreement, service-affecting problems are worked immediately regardless of contracted coverage with billing reconciliation if required. Acting as a single point of contact with the customer, the RTAC engineer will involve all necessary tiers of support to solve the customer problem.

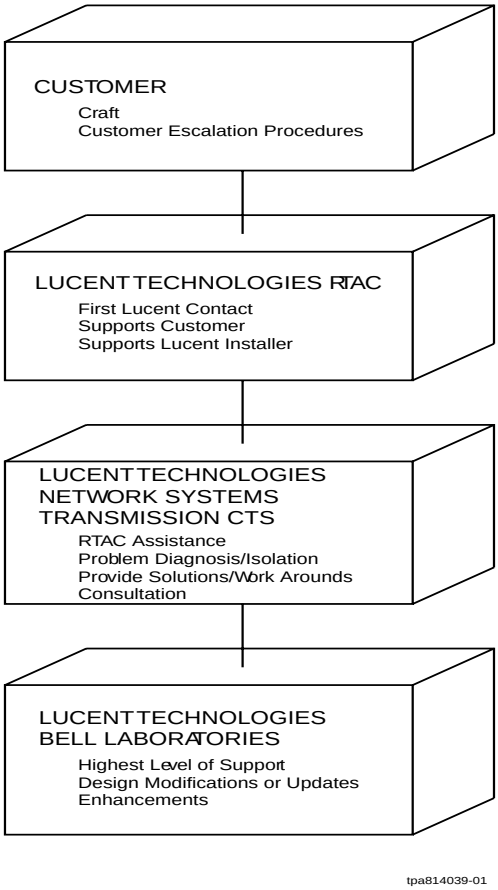

Figure 3. Product Support

Engineering and Installation Services

The Lucent Technologies Customer Support and Operations (CS&O) organization provides customers with quality product support services. Whether you need assistance in engineering, installation, normal system maintenance, or disaster recovery, the support staff provides you with the quality technical support you need to get your job done. Each segment of the CS&O organization regards the customer as its highest priority and understands your obligation to maintain quality service for your customer.

Within the CS&O organization, the Engineering and Installation Services group provides a highly skilled force of support personnel to provide customers with quality engineering and installation services. These engineering and installation specialists use state-of-the-art technology, equipment, and procedures to provide customers with highly competent, rapid response services. These services include analyzing your equipment request, preparing a detailed specification for manufacturing and installation, creating and maintaining job records, installing the equipment, and testing and turning over a working system.

When the CS&O organization provides job records and installs the equipment, operationally affective changes to the system are automatically identified and applied to the system at no additional cost.

The Engineering and Installation Services group provides the customer with an individually tailored, quality-tested job that meets our published high standards and the customer's operational requirements. The group ensures that the customer's system order is integrated into a complete working system tailored to office conditions and preferences. This process provides for the customer's complete needs. It includes provisions for cabling, lighting, power equipment, and ancillary connections to local and/or remote alarm systems. The group will also respond to any customer changes that occur during installation.

All equipment engineered and installed by Lucent Technologies is thoroughly tested and integrated into a reliable system at cutover. Once approved by Lucent’s Quality Assurance Test group, the system is turned over to the customer.

The group also provides any specialized engineering and installation services required for unusual or highly individualized applications. These services may include engineering consultations and database preparation. Your local Account Executive can provide more information about these services.

Customer Technical Support Enhanced Services

The goal of Lucent Technologies' Customer Technical Support Enhanced Services is to keep Lucent Transmission Systems products operating at maximum performance and to prevent problems from interrupting service to customers.

Typical Enhanced Services include:

- Network design, growth planning, and performance analysis
- Multivendor troubleshooting
- Network integration
- Preventive and remedial maintenance
- Hardware and software upgrade services
- On-site maintenance programs
- Customized MOP (Method of Procedure) development.

For more information on Lucent's Customer Technical Support Services, contact your Lucent Technologies' Account Executive.

Documentation Support

The Lucent Technologies Customer Training and Information Products organization provides a contact to report errors or to ask questions about information in this document. The document support telephone number is **1-800-645-6759** (Monday through Friday, 8:00 a.m. to 4:00 p.m. EST).

How to Order Documents

To order additional copies of this document and/or request placement on the standing order list, send or call in an order as follows:

Customer	Mail Order	Telephone Order *(Monday through Friday)*
Commercial Customers*	Lucent Technologies Customer Information Center Attention: Order Entry Section 2855 N. Franklin Road P.O Box 19901 Indianapolis, IN 46219	Within USA: **1-888-582-3688 or 1-888-LUCENT-8** *7:30 a.m. to 6:30 p.m. EST* FAX: **1-800-566-9568** From Europe, The Middle East & Africa Toll **1-317-322-6416** From Canada, the Caribbean & Latin America Toll **1-317-322-6646** From Asia, the Pacific Region & China: Toll **1-317-322-6411** Worldwide: FAX: **1-317-322-6699**
RBOC/BOC	Process through your Company Documentation Coordinator	

* For commercial customers, a check, money order, purchase order number, or charge card number is required with all orders. Make checks payable to Lucent Technologies. Lucent Technologies entities should use Form IND 1-80.80 FA, available through the Customer Information Center.

Standing Orders

One-time orders include a binder (if applicable) and the document contents for the current issue in effect at the time of order. Also, you may request placement on the standing order list for all later reissues of the document. The standing order list for each document provides automatic distribution for all reissues of the document. RBOC/BOC customers should process document orders or standing order requests through their Company Documentation Coordinator. For questions regarding standing orders or to be placed on a standing order list, call the applicable Lucent Technologies Customer Information Center number listed previously.

How to Comment on This Document

Feedback forms are located immediately after the title page of this document. Please fill out a form and return it to the address stamped on the front of the form or fax it to the number provided on the form.

If the feedback forms are missing, send comments on this document to:

Lucent Technologies
Customer Training and Information Products
2400 Reynolda Road
Winston-Salem, NC 27106

You may also report errors or request changes to this document by calling the toll free number, **1-800-645-6759** and giving the 9-digit document number.

Electronic Documentation

Documentation for the DDM-2000 FiberReach Multiplexer is now available in electronic form, on compact disk, read-only memory (CD-ROM). CD-ROM has many advantages over traditional paper documentation, including cost savings, search and retrieve capability, and the assurance of the most current documentation.

CD-ROM is available by annual subscription (on standing order).

- To order, call your Technical Information Resource Manager, your Lucent Technologies Account Executive, or the Lucent Technologies Customer Information Center at **1-888-LUCENT8 (1-888-582-3688)**.
- For pricing information, contact your Lucent Technologies Network Systems Account Executive or the Lucent Technologies Customer Information Center **1-888-LUCENT8 (1-888-582-3688)**
- For technical information, call Lucent Technologies Documentation Support **1-800-645-6759.**

System Introduction

1

Contents

Overview 1-1

Lucent 2000 Product Family 1-1

Basic Description of the SLC-2000 Access System 1-2

Basic Description of the DDM-2000 FiberReach Multiplexer 1-3

DDM-2000 FiberReach Releases 1-7

- Release Descriptions 1-7

Contents

-

System Introduction

1

Overview

This chapter introduces the Lucent 2000 Product Family and briefly describes the DDM-2000 FiberReach product.

Lucent 2000 Product Family

Lucent is focused on a carefully planned and growing product family designed to provide total network solutions. The 2000 Product Family complies with the synchronous optical network (SONET) standard and builds on features and capabilities that customers have found to be useful and successful in networks such as single-ended maintenance features and product upgrade capabilities. These upgrade capabilities allow a graceful evolution from today's asynchronous networks to the world-class intelligent networks of the future. The 2000 Product Family provides the significant elements of the Lucent Service Net-2000 Architecture.

Lucent's Service Net-2000 Architecture starts with the network as it exists today and provides real-world solutions to build upon your existing base. It also allows a graceful evolution from rigid wire centers to a network of flexible nodes. This network distributes intelligence to where it functions best.

The Service Net-2000 Architecture offers access bandwidth, service on demand, and self-healing network applications. Access bandwidth offers increased capacity, giving end users the ability to access any desired service. This increased

access bandwidth, provided over fiber, offers superior network reliability while opening up new revenue opportunities.

Service on demand offers high-capacity services implemented in short intervals. This application gives local exchange carriers the opportunity to generate new revenue faster by provisioning new services at a competitive "fast start" pace. At the same time, they help maintain the existing revenue base by increasing customer satisfaction. Service on demand also reduces start-up costs, thereby improving capital management.

The self-healing network application involves careful planning and provisioning of cross-product capabilities with the 2000 Product Family. At the core of this network is DACS III-2000 and DACS IV-2000 Cross-Connect Systems, the nerve center of interoffice transmission. The intelligent DACS III-2000 and DACS IV-2000 Cross-Connect Systems, working with the *ITM SNC* Controller, can identify failed connections and reroute signals according to a preestablished recovery plan. The DDM-2000 Multiplexers offer self-healing networks based on highly reliable path-switched rings.

The Lucent 2000 Product Family includes the:

- DDM-2000 FiberReach Multiplexer
- DDM-2000 OC-3 Multiplexer
- DDM-2000 OC-12 Multiplexer
- FT-2000 OC-48 Lightwave System
- DACS III-2000 Cross-Connect System
- DACS IV-2000 Cross-Connect System
- *ITM SNC* Controller
- *SLC*®-2000 Access System
- Business Remote Terminal-2000 (BRT-2000)
- ITM SNC Subnetwork Controller
- CPro-2000 System.

Basic Description of the *SLC*-2000 Access System

The *SLC*-2000 Access System is the Lucent Technologies real-world digital loop carrier (DLC) solution that builds upon our proven digital loop carrier system experience. It is based on standard interfaces, network element commonality, and operational ease. This service-ready platform provides cost-effective deployment options and full-service capabilities that dramatically enhance the revenue generating capability and competitive positioning of your company.

The *SLC*-2000 Access System builds upon many of the administrative and operational features of the industry standard *SLC* Series 5 Carrier System and the *SLC* 96 Carrier System. The *SLC*-2000 Access System offers better ways of providing services and supports the standard digital interfaces for universal and integrated systems. It provides a synchronous optical network (SONET) OC-3 feeder interface, a DSX-1 metallic feeder interface, and enhanced operations, administration, maintenance, and provisioning (OAM&P) capabilities. The *SLC*-2000 Access System offers increased system flexibility to serve a wide variety of network applications.

The *SLC*-2000 Access System is a software-driven DLC system with a built-in SONET multiplexer. The system provides up to 768 subscriber lines and 28 subscriber DS1s, and has an option to equip a built-in loop test system test head [the integral test head (ITH)]. The system supports the following:

- Basic telephone service
- A full complement of special services Integrated Services Digital Network (ISDN)
- ONUs using both Fiber in the Loop (FITL) and DSX-1 metallic distribution
- Metallic distribution
- TR-08 standard interface
- TR-303 interface.

Basic Description of the DDM-2000 FiberReach Multiplexer

The DDM-2000 FiberReach Multiplexer is a full-service access product designed to support business carrier access, fiber-in-the-loop, and private network applications. DDM-2000 FiberReach has been designed to serve a multitude of services through a very modular architecture based on extensive reuse. The architecture consists of two types of shelves:

- Wideband Shelf
  - Provides the optics for the narrowband shelf, as well as a complete DS1 to OC-1/OC-3/OC-12 solution. Eight low-speed slots are available, optionally provisioned for up to sixteen 1x1 protected or unprotected DS1s, or up to twenty-eight 1x7 protected or unprotected DS1s. These low-speed slots may also be used to house T1 extension or HDSL circuit packs. Two function slots are also available, offering shelf space for 1x1 protected DS3, DS3/OC-3c data interfaces.
  - As part of the 2000 Family of Products, the DDM-2000 FiberReach Multiplexer supplies complete operations, administration, maintenance, and provisioning (OAM&P) features with a look and

feel that matches the DDM-2000 OC-3 and OC-12 Multiplexers. The DDM-2000 FiberReach Multiplexer fits into the already existing SONET networks and interworks with the existing OSs. Remote operations are via the International Standards Organization (ISO) standard 7-layer open systems interconnection (OSI) protocol, while a user panel and craft interface terminal (CIT) port support local operations needs. Complete performance-monitoring features, including DS1 path performance monitoring, permit the service provider to verify the quality of service based on key tariffs.

— The HDSL circuit pack (BBF8) provides HDSL interface capability on the DDM-2000 OC-3 shelf to compatible *PairGain** equipment at the customer premises. It allows the transport of DS1 rate payloads, for up to 12,000 feet, over two metallic 24 AWG twisted-pair lines. Application for business customers, the private network, cell sites, PBXs, customer premises equipment (CPE), and other applications are supported. The DDM-2000 FiberReach wideband shelf supports DS1, HDSL (with 28-type OLIUs) and T1 carrier extension interfaces. The DS1 interface accepts any DSX-1 compatible signal (clear channel interfaces). When equipped with 28-type OLIUs, the shelf supports 1 protected or 2 unprotected DS3 interfaces, or a single OC-3c interface.

- Narrowband Shelf

  — Which can be used together or separately in a variety of configurations. The narrowband shelf supports all of the services that are currently supported by Lucent's *SLC*-2000 Multi-Services Distant Terminal (MSDT) product but has two times the capacity to serve customers by requiring a concentration of special services at a single site. The channel units housed in the narrowband module are the *SLC*-2000 channel units.

  — Which can be used for telephony applications, complete remote operations, such as channel unit provisioning and integrated testing, are available through the *SLC*-2000 host. The *SLC*-2000 host also creates the link into the *5ESS*® electronic switch for TR08 or TR303 communications.

Together, the wideband and narrowband shelves can be deployed in outside plant or customer premises enclosures (including wall mounted) or can be rack-mounted.

The DDM-2000 FiberReach Multiplexer has a phased release plan. This manual covers Releases 3.0 and later of the DDM-2000 FiberReach Multiplexer. The manual will be updated to cover additional releases as they become available.

* PairGain is a registered trademark of PairGain Technologies, Inc.

- *SLC LineReach* Access System
  - The *SLC LineReach* Access System is a small digital loop carrier (DLC) remote terminal (RT) that provides up to 48 lines of POTS-type services, special services, or other DS0 services. Feature package 1.1 (FP1.1) supports up to two DS1-type interfaces and can be deployed in either a universal or integrated DLC configuration. Some of the basic features that make the *SLC LineReach* system an attractive, cost-effective DLC system include:
    - ***Small Size.*** The small system size means that you can easily mount it to meet your customer's specifications. The system is approximately the same size as the narrowband shelf.
    - ***TR-08, INA, and TR-303 Interfaces.*** FP1.1 provides for a TR-08 interface to the switch, *SLC*2000, or *SLC*96 COT. If interfacing with a *SLC* Series 5 COT, it provides an "FPC-type" interface that uses extended SuperFrame (ESF) framing format. In addition, FP1.1 provides for an INA interface. Future economical upgrades will also allow for a TR-303 interface to a switch.
    - ***Full Range of Services.*** The system offers a full range of services including POTS (plain old telephone service), locally switched special services, integrated services digital network (ISDN), and non-locally switched special services.
    - ***High Bit Rate Digital Subscriber Line (HDSL) and Other Interface Capability.*** In addition to providing a T1 carrier interface and a DSX-1 feeder interface, the *SLC LineReach* system can also provide HDSL feeder interface. HDSL feeders allow the system to operate without repeaters over existing copper facilities that meet carrier serving area (CSA) guidelines.
    - ***Central Office Terminal (COT) Compatibility.*** For universal applications, the *SLC LineReach* system can interface with the switch through standard *SLC* 96, *SLC* Series 5, or *SLC*-2000 COTs, D4, and DACS.
    - ***Drop Testing*** (non-INA systems only). The system supports a standard drop testing operations system allowing you to test and maintain the customer's drop.
  - These features allow you to deploy and maintain the *SLC LineReach* system easily, quickly and flexibly. The system consists of a shelf assembly with 10 inch by 11 inch dimensions. It is populated with common circuit packs and channel units.
  - The *SLC LineReach* Access System now supports an integrated configuration with DDM-2000 FiberReach Wideband Shelf which provides new interface applications.

— For more information regarding the *SLC LineReach* Access System, as well as these new applications, refer to the *SLC LineReach Access System Applications, Planning, and Ordering Guide*, 363-208-400.

The wideband shelf and narrowband shelf communicate with each other via standard DS1 interfaces.

Figure 1-1 shows an example of how the DDM-2000 FiberReach Multiplexer fits into existing networks. Other examples are shown in the *FiberReach Multiplexer Applications, Planning, and Ordering Guide*, 363-206-300.

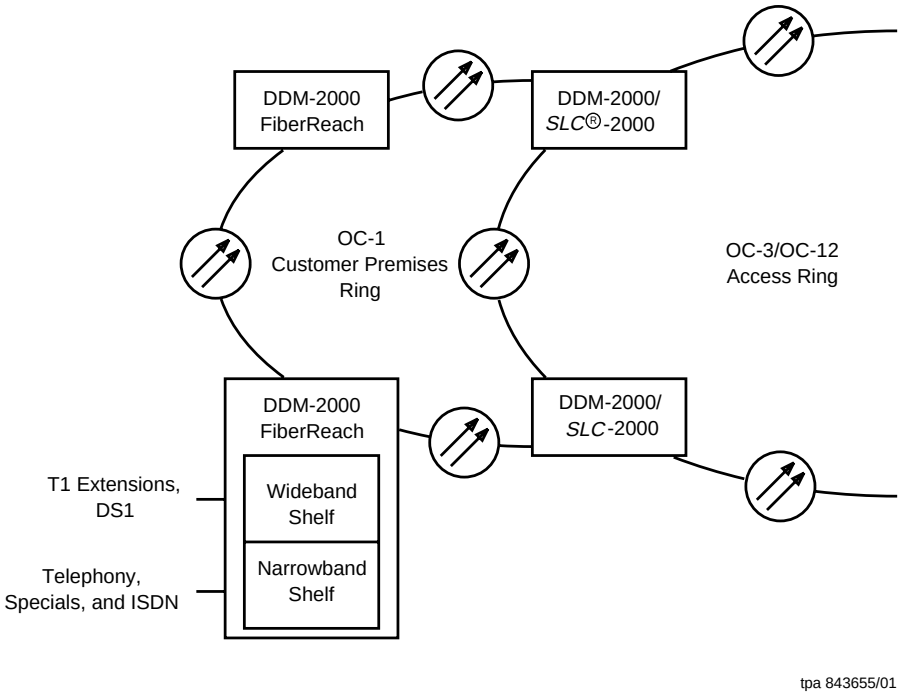

Figure 1-1. Example of DDM-2000 FiberReach Multiplexer in the Network

DDM-2000 FiberReach Releases

NOTE:
DDM-2000 FiberReach Release 3.0, 3.1, and 4.0 are **NOT** compatible with previous releases of DDM-2000 FiberReach, OC-3, OC-12 and FT-2000 that do not support TARP, thus care should be taken to avoid isolating NEs that have not yet been upgraded to Release 3.0 or later when upgrading a subnetwork.

Release Descriptions

The following paragraphs provide a brief description of available DDM-2000 FiberReach Multiplexer releases.

Release 2.2 provides the following:

- New OC-3 OLIU (28G-U/28G2-U) for OC-1 Shelf. The new 28G-U/28G2-U OLIU provides OC-3 optics directly from the DDM-2000 OC-1 Shelf. This allows the FiberReach shelf to support an OC-3 ring, with the low-speed input capacity of the 28 VT1.5 shelf. The 28G-U/28G2-U OLIU provides visibility to the full STS-3 bandwidth and allows for selection of any 28 VT1.5s within the 3 STS-1s on the OC-3 ring for drop at the FiberReach shelf. Remaining traffic can be passed-through on the OC-3 ring.
- New Secured-Area Telecommunications Applications Cabinet (STAC) System — FRC 2000. This small, integrated modular indoor cabinet offering enables the provisioning of electronic controls, terminals, and instruments quickly at the point of need with minimal investment and real estate. The enclosure optimizes equipment density, heat transfer, environmental protection, and ease of installation and maintenance. It is designed to maximize public and installation safety.
- The HDSL circuit pack (BBF8) provides for HDSL interface capability on the DDM-2000 FiberReach shelf. It allows the transport of DS1 rate payloads, for up to 12,000 feet, over two metallic 24 AWG twisted-pair lines. Data is transported over each pair bidirectionally using echo cancellation techniques.

Release 3.0 (TARP Release) supports the following features:

- Pointer Justification Count (PJC). This performance monitoring parameter indicates a frequency error in the network or other potential synchronization problems. It provides a threshold crossing alert (TCA) when the STS-1 pointer justification count in a performance bin exceeds a user provisioned threshold value.
- The BBF3B DS1 PM Circuit Pack low-speed interface can be provisioned for the following DS1 formats: clear channel (default), superframe (SF) as specified in *ANSI* T1.403-1989, or extended superframe (ESF) as specified in *ANSI* T1.403-1989. In the case of SF or ESF format selections, DS1 performance information is collected by monitoring the associated DS1 framing format.
- Single DS1 facility loopback using the BBF3B circuit pack.
- Manual timing pack switch for the wideband shelf: This capacity adds the ability to manually switch which main OLIU is supplying timing to the shelf. In this way, the switch can be effected remotely. An additional use of this capacity is to switch timing functionality off of a main OLIU prior to removing it for maintenance. This feature also causes an “active-fn” OLIU pack equipment switch which will be reflected in the “`rtrv-state-eqpt` report”.
- Multi-Vendor Operations Interworking (OI) compatibility.
  - DDM-2000 FiberReach is compatible with any other-vendor NEs that support Target ID Address Resolution (TARP) protocol, OSI, and TL1/X.25 as specified in Telcordia Technologies TR-253.
  - Compatible with Tellabs *TITAN* 5500/S Release 5.0 Digital Cross-Connect System, including TL1 OS access with TITAN 5500/s DCS serving as the TL1/X.25 GNE.
- Lucent 2000 Product Family OI compatibility.
  - Compatible with DDM-2000 OC-3 Release 13.0 and OC-12 Release 7.0 and FT-2000 R8.0 (but not with earlier releases due to multi-vendor OI support).
- Large subnetworks.
  - Supports large subnetworks of up to 256 NEs by partitioning the subnetwork into multiple areas connected via Level 2 Intermediate Systems (IS).
- CPro-2000, ITM SNC support. FiberReach Release 3.0 is supported by:
  - CPro-2000 Release 7.0; ITM SNC Release 5.0.

- ITM SNC Release 5.0 enhancements for FiberReach Release 3.0:
  - ITM SNC software download to FiberReach*
  - ITM SNC as the TL1 GNE
  - ITN SNC backup and restore enhancements.
- Default TID. The default Target Identifier (TID) for R 3.0 is LT-DDM-2000, instead of the previous default of Site#NE#.
- TL1 commands:
  - RTRV-CID-SECU (also new CIT command RTRV-SECU) to report the active user logins.
  - RTRV-LOG to report the 500 most recent events in the history log (equivalent to existing CIT command RTRV-HSTY).
  - ENT-FECOM to provision DCC user-side/network-side settings and to enable or disable remote access via each DCC (equivalent to existing CIT command SET-FECOM which is now supported via CIT remote login and OS).
  - RTRV-FECOM to report the provisioned state of each DCC (equivalent to existing CIT command RTRV-FECOM).

Release 3.1 (TARP Release) supports the following features:

- Supports the OC-3 optics through the 28G-U/28G2-U OLIU circuit packs in the Main Unit slots and therefore supports all the related features that were added to Release 2.2. The related OC-3 features are as follows:
  - STS-1 pass-through cross-connections on the 28G-U/28G2-U equipped FiberReach shelves
  - Full OC-3 VT cross-connections to Main slots equipped with the 28G-U/28G2-U OLIU
  - Provisionable S1 byte option, if the FiberReach shelf is equipped with the OC-3 interfaces in both Main Unit slots
  - Provisionable *Synch Autoconfiguration.*
- Supports the STS-3c 0X1 application using the OC-3 interface (22-type) in the Function Unit slots of the FiberReach NEs.
- Supports the DS3 (BBG4B Circuit Pack) in the Function Unit slots of the FiberReach shelf. This provides the ability of transporting STS-1 services using the DS-3 circuit packs in the Function Unit slots.

---

* This feature will be useful when upgrading from FiberReach Release 3.0 to later releases.

- Multi-media Data Services: A new DS3 (BBG19) interface provides the flexibility to offer a full range of multi-media data services via embedded and new DDM-2000 networks. This full-solution offering is made possible by interfacing DDM-2000 to any of the numerous commercially available data edge devices which provide the various data services interfaces.
- The HDSL circuit pack (BBF8) provides for HDSL interface capability on the DDM-2000 FiberReach shelf. It allows the transport of DS1 rate payloads, for up to 12,000 feet, over two metallic 24 AWG twisted-pair lines. Data is transported over each pair bidirectionally using echo cancellation techniques.

Release 4.0 supports the following applications and features:

- OC-12 optics through the 29G-U/29H-U OLIU circuit packs in the Main Unit slots. The related features are as follows.
  - STS-1/STS-3c/VT1.5 pass-through cross-connections on the 29G-U/29H-U OC-3 equipped shelves
  - STS-3c cross-connections to Function Unit
  - In-service upgrades only from 28G-types to the new 29-type OLIUs.
- DCC provisioning on Main (identical/distinct) for OC-3/OC-12 ring interface. Identical DCC mode allows a remote shelf to interconnect through its Main ring interfaces with a 1+1 linear extension on a host OC-3, OC-12, or OC-48 shelf using ring software.
- Provisioning of asynchronous CIT port to run TL1.
- Remote alarm status (using the AGNE and the Alarm Group concept).
- CPro-2000, ITM SNC support: Release 4.0 is supported by:

  CPro-2000 Release 10.0; ITM SNC Release 10.0
- DS3 using BBG4/BBG4B while using the OC-1 optics in the Main.
- Multimedia Data Services using DS3 BBG19 for Lucent DDM-2000 FiberReach NE (used for DS3 locked cross-connects, to support data services), while using the OC-1 (26-type) OLIUs in Main. (The BBG19 in the Function Unit slots is currently supported with the 28-type OLIUs in Main to provide this type of service.)

Applications

2

Contents

Overview 2-1

DDM-2000 FiberReach Applications Summary 2-1

- Ring Topologies 2-3
  - OC-3 Path Switched Ring 2-5
  - OC-12 Path Switched Ring 2-7

DDM-2000 FiberReach Network Topologies (OC-1) 2-9

Basic Wideband Shelf Configurations 2-9

- DS1 and T1 Services 2-9
  - Single-Homed Access via Backbone Ring 2-10
  - Dual-Homed Access via a Backbone Ring 2-13
  - Integration with Dual Wire Center Applications 2-14
  - Single Homing to Linear DDM-2000 OC-3 Networks 2-16
  - Stand-Alone OC-1 Ring/Hub Networks 2-17

Enhanced Routing 2-20

- OC-1 Ring Pass-Through 2-21
- OC-1 Ring Hairpin Routing, Single-Homed 2-22
- OC-1 Ring Hairpin Routing, Dual-Homed 2-23
- Hairpin Local Drop Routing 2-24

DDM-2000 FiberReach Network Topologies (OC-3 and OC-12) 2-25

- 28-Type Optical Line Interface (28G-U/28G2-U) 2-25
  - Circuit Pack Overview 2-25
- 29-Type Optical Line Interface (29G-U/29H-U) 2-26

Contents

Circuit Pack Overview 2-26

- DDM-2000 FiberReach Service Applications 2-28
- LAN/WAN Data Networking: DS3 Data Services 2-28
- High Data-rate Subscriber Line (HDSL) Application 2-32

DDM-2000 FiberReach Service Applications Using the 28G-Type OLIU (Release 2.2 — Non-TARP Release) 2-34

DDM-2000 FiberReach Service Applications Using the 28G-Type OLIU (Release 3.1, TARP) 2-39

- Basic DS3 Cross-Connects 2-40

DDM-2000 FiberReach Service Applications Using the 29-Type OLIU (Release 4.0, TARP) 2-43

STS-3c 0X1 Optical Interface 2-45

Basic Narrowband Shelf Configurations 2-48

Integrated DS1, T1, and DS0 Services 2-54

- Integrated Narrowband Business Carrier Access 2-54
- Integrated DS1 Transport Configuration with SLC LineReach Access System 2-60

SONET Transport 2-60

Intelligent Vehicle Highway System (IVHS) 2-62

Teleprotection and Supervisory Control and Data Acquisition (SCADA) Communications for Electric Utilities 2-64

Applications

2

Overview

The DDM-2000 FiberReach Multiplexer can support a range of applications with maximum economy and efficiency. This chapter highlights the ways the DDM-2000 FiberReach Multiplexer, along with other members of the 2000 Product Family, meets these diverse network needs.

DDM-2000 FiberReach Applications Summary

Lucent Technologies' 2000 Product Family has set the standard for networking flexibility. The newest member of this family, the DDM-2000 FiberReach Multiplexer, extends the benefits of the DDM-2000 Multiplexer and *SLC*®-2000 Access System to end users whose capacity needs may be small but still demand the cutting edge services and support of the larger customers. Targeting the diverse needs of business carrier access, residential fiber-in-the-loop, and private network applications, DDM-2000 FiberReach will deliver a full range of services using the wideband and narrowband shelf as follows:

- Wideband Shelf
  - DS1 Services (via DSX-1 or T1 carrier access)
  - Video Transport.
- Narrowband Shelf
  - Telephony
  - DS0 Specials
  - Integrated Services Digital Network (ISDN).

DDM-2000 FiberReach interworks with DDM-2000 OC-3/OC-12 and *SLC*-2000 Access System hosts via an exceptional variety of networking options, including single-homed OC-1 path-switched ring extensions and fully survivable dual-homing topologies. In every application, DDM-2000 FiberReach offers a thorough set of operations features with a look and feel that matches the other acclaimed DDM-2000 Multiplexer systems. Remote operation is via the data communications channel (DCC), while a user panel and craft interface terminal port support local operations needs. Complete performance-monitoring (PM) features, including DS1 path PM, permit the service provider to verify the quality-of-service terms of key tariffs.

DDM-2000 FiberReach will extend the service provider's investment in SONET networks by supporting broadband capabilities such as two-way moving picture experts group (MPEG 2) videoconferencing transport within standard synchronous optical network (SONET) signal formats. Thus, new broadband services can be created by pairing the bandwidth of DDM-2000 FiberReach with the network survivability and resultant revenue-generating potential of path protection switching and dual wire center architectures.

Three types of DDM-2000 FiberReach applications are offered:

- **Business Carrier Access**: Premium-tariffed telecommunications services (via DS1 or T1 carrier extensions) supplied by public network providers to business customers
- **Fiber in the Loop**: Cost-effective basic telephony, as well as emerging video and data services
- **Private Networks**: Privately held networks that supply the internal communication needs of large corporations, organizations, and institutions.

While DDM-2000 FiberReach applications are quite flexible and easy to use, aspects like bandwidth, facility management, and operations subnetwork design require some more detailed consideration.

Ring Topologies

The need to prevent service outage caused by network failure has created a new class of applications. The 2000 Product Family offers a wide range of self-healing network features that automatically protect against service outage caused by cable cuts and equipment failures, which in turn protect customers and generate increased revenue. These self-healing features include flexible DACS-based restoration with the *ITM XM* controller, *SLC*®-2000 2- and 4-fiber rings, DDM-2000 OC-3 and OC-12 virtual tributary 1.5 (VT1.5) and STS-1 path switched rings, *SLC*-2000 Access System path switched rings, and DDM-2000 FiberReach VT1.5 path-switched rings.

DDM-2000 FiberReach, DDM-2000 OC-3, DDM-2000 OC-12, and *SLC*-2000 Access System self-healing rings offer the performance and administrative benefits demonstrated by the successful Lucent FT Series G Ring Diversity Switch. Since the DDM-2000 FiberReach, OC-3, OC-12, and FT-2000 path switched rings operate in an integrated, single-ended fashion, complex network-level coordination is not necessary to restore traffic. This means restoration is faster and more reliable. Furthermore, bandwidth administration and network reconfigurations (for example, adding or deleting nodes) can be easier.

The DDM-2000 FiberReach, OC-3, and OC-12, and *SLC*-2000 path-switched rings operate as shown in Figure 2-1(a). Traffic entering a path switched ring node is sent onto both rotations of the ring. At the receiving node, the signal having the highest integrity (based on SONET path information) is selected and dropped as outgoing traffic. At intermediate nodes, the traffic is "passed-through" without changing the SONET path information. The DDM-2000 time slot interchange (TSI) capabilities make the provisioning of add/drop and pass-through traffic quick and easy.

The self-healing nature of the path switched ring is shown in Figure 2-1(b). In this case, the fiber failure between nodes B and C causes node B to switch from the counterclockwise ring to the clockwise ring, thus maintaining service between node A and C.

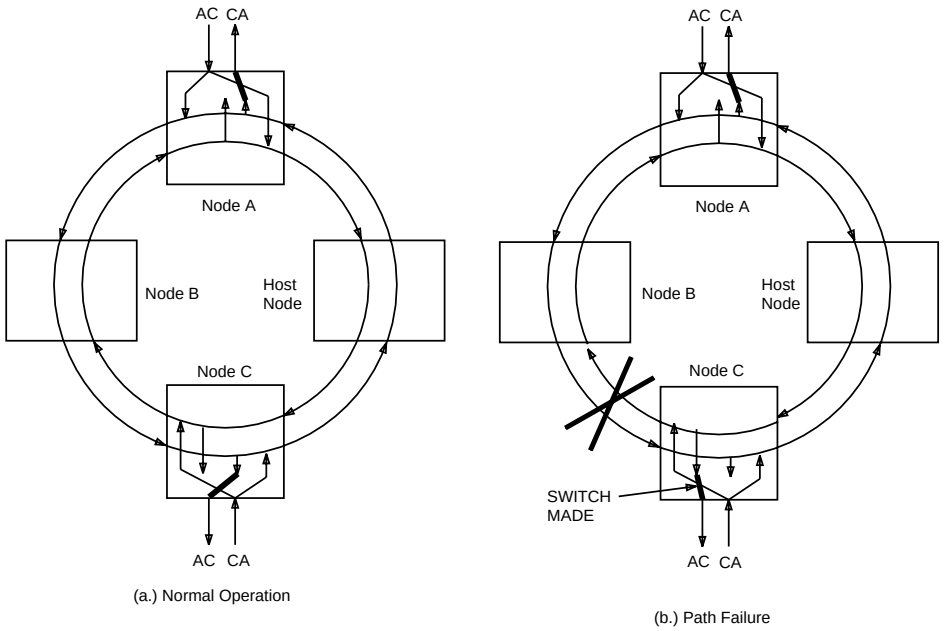

Figure 2-1. Path Switched Ring

A network which requires the bulk of its traffic to be dropped at a single node is an ideal application for path switched rings. A typical loop feeder network, where most traffic is between the subscriber loop to a central office, fits this mold. Such an application calls for the delivery of protected DS1 and DS3 service to customer locations. In many cases, where the network serves only voice traffic and DS1s, a DDM-2000 FiberReach/OC-3/*SLC*-2000 path switched ring is a perfect fit. If DS3 service or a mixture of DS1 and DS3 service is needed, one or more OC-3 rings may be necessary. Cost, fiber availability, and bandwidth flexibility all play a part in determining whether a single OC-1 or OC-3 ring, multiple OC-1 or OC-3 rings, or an OC-12 ring will be the best network solution.

OC-3 Path Switched Ring

A DDM-2000 FiberReach can be equipped with OC-3 optics. This option offers a cost effective solution at locations where the dropped traffic is primarily VT1.5 based and is accessed from any one of the 3 STS-1s. DDM-2000 OC-3 multiplexers can be mixed in the same OC-3 ring. The OC-3 multiplexers can be used at sites requiring DS3 and other higher bandwidth STS path-switched traffic, while the FiberReach multiplexer is used at sites requiring VT path access for DS1, T1, etc. Figure 2-2 shows an OC-3 ring that includes both OC-3 and FiberReach multiplexers.

Starting with FiberReach Release 3.1, FiberReach shelves can be used at sites requiring DS3 services (STS-1 path access for DS3).

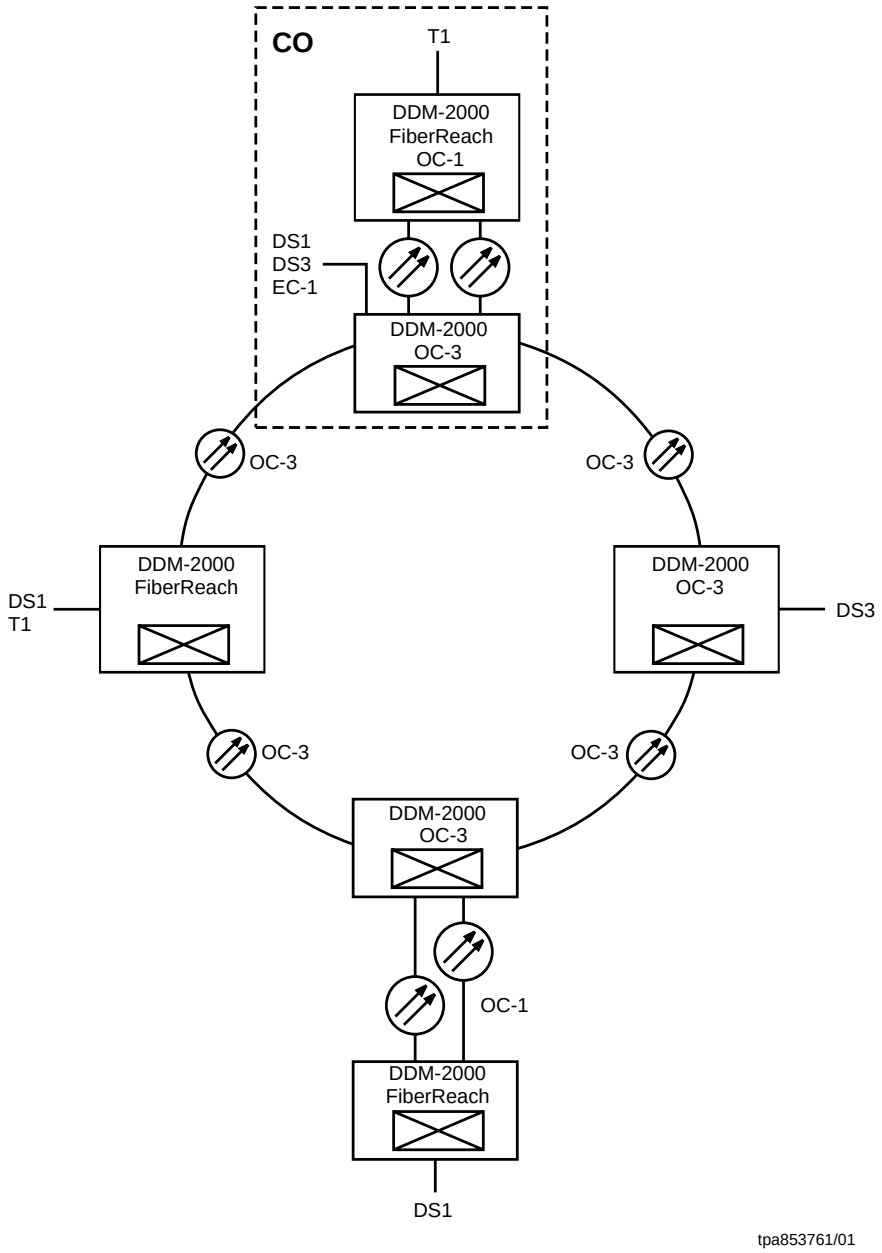

Figure 2-2. OC-3 Path Switched Ring Using OC-3 Multiplexer and FiberReach Multiplexer With OC-3 Optics

OC-12 Path Switched Ring

A DDM-2000 FiberReach can be equipped with OC-12 optics. This option offers a cost effective solution at locations where the dropped traffic is primarily VT1.5 based and is accessed from any one of the 12 STS-1s. FiberReach multiplexers equipped with OC-12 optics in Release 4.0 and later can be mixed in the same OC-12 ring. The OC-12 multiplexers can be used at sites requiring DS3 and other higher bandwidth STS path-switched traffic, while the FiberReach multiplexer is used at sites requiring VT path access for DS1, T1, etc. Figure 2-3 shows an OC-12 ring that includes both OC-3, OC-12, and FiberReach multiplexers.

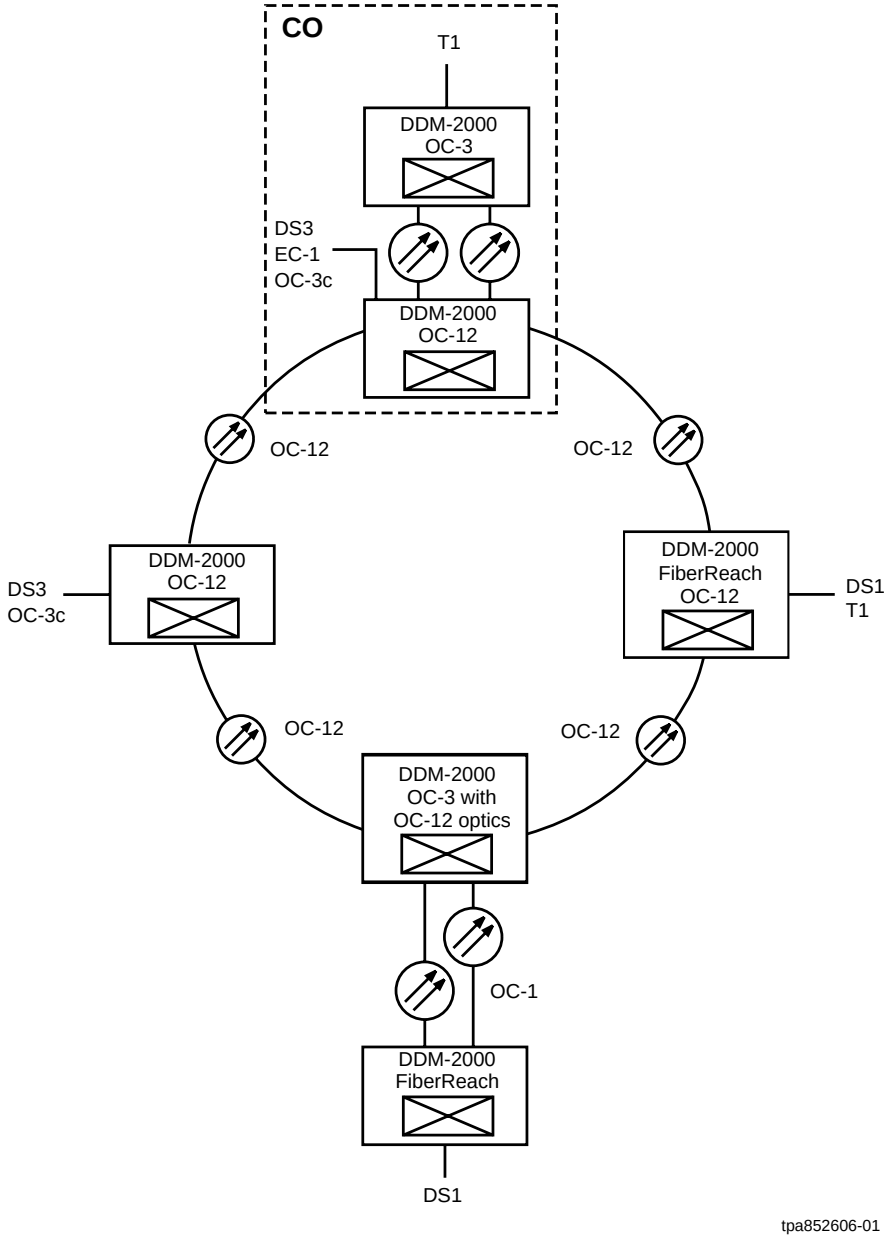

Figure 2-3. OC-12 Path Switched Ring Using DDM-2000 OC-12, OC-3, and FiberReach Multiplexers With OC-12 Optics

DDM-2000 FiberReach Network Topologies (OC-1)

Business Carrier Access is one of today's fastest growing network applications. To supply the advanced communications services demanded by many business customers, local exchange carriers and competitive access providers are dedicating access networks between these customers and their wire centers. Long-distance voice and data services (for example, 1-800 reservations and customer support lines) are delivered from interexchange carrier (IXC) points of presence (POP) to the access networks along with any intra-LATA services needed by the customer. Network survivability, leading edge services, and quick response to changing end user demands are cornerstones of this market.

Small businesses and branch offices are increasingly sophisticated telecommunications users, demanding the advanced services, survivability, and network performance traditionally afforded only the large business locations. While many locations may get by today with a DS1 and a few voice lines, fast emerging LAN interworking, video conferencing, and other data and image applications require an access network of great flexibility. With the DDM-2000 FiberReach system, network providers have an unsurpassed opportunity to expand and compete in this critical market.

Where services are at the DS1 rate and above, DDM-2000 networks supply all the host functions a DDM-2000 FiberReach needs. However, switched service network providers require a forward-looking access network that handles DS0, specials, ISDN, and telephony with DS1 high capacity services in an integrated offering. Where telephony, DS0, and ISDN services are needed, the *SLC*-2000 Access System host supplies powerful bandwidth management and operations for DS0 level channel units, testing, and TR08/TR303 integrated switch interfaces.

DDM-2000 FiberReach is typically placed at customer locations, in telecommunications equipment rooms and closets, and often connects to an OC-3 or OC-12 backbone feeder ring at a nearby cabinet, controlled environment vault (CEV), or other remote terminal location. Alternatively, customer sites near a wire center can be served by OC-1 facilities directly from the wire center, bypassing the backbone feeder ring.

Basic Wideband Shelf Configurations

DS1 and T1 Services

The examples in this section provide DS1/T1 services only. If the NBS and DS0 level services are needed, a FiberReach Wideband Shelf must be co-located with SLC-2000 systems on the OC-3/OC-12 rings to provide DS1 connections from the SLC-2000 MDS shelves to the FiberReach OC-1 ring.

Single-Homed Access via Backbone Ring

Figure 2-4 and Figure 2-5 illustrate how single-homed OC-1 extensions can satisfy a growing access network. Single-homing applications connect both rotations of the OC-1 extension to a single DDM-2000 OC-3 Multiplexer or *SLC*-2000 Access System host. The DDM-2000 FiberReach is placed at the customer's location, such as in a telecommunications equipment closet on each floor of a high-rise office complex, and delivers protected DS1 channels to the business customer.

The OC-1 ring capability allows multiple DDM-2000 FiberReach systems to be connected to the backbone network via a single facility. Compared to other optical extension products that are limited to a single remote node per extension, the ring-based DDM-2000 FiberReach solution uses far less fiber and host optics for typical serving areas with multiple business locations. Network growth is as easy as adding another DDM-2000 FiberReach node on the ring; no additional fiber or host circuit packs are required.

With the dual OC-1 capability of the 27G-U optical line interface unit (OLIU), a DDM-2000 OC-3 ring node supports up to six single-homed OC-1 extensions; a *SLC*-2000 Access System access resource module (ARM) shelf can supply up to two single-homed OC-1 extensions. Thus, competing businesses in the same serving area can receive a dedicated access facility into the backbone ring, alleviating any privacy concerns.

The DDM-2000 FiberReach remote system employs standard path protection switching for a highly reliable network that guarantees 60 millisecond recovery from any single facility or equipment failure. Path protection switching occurs at a node in which the channel is dropped from the ring to a low-speed interface. For example, in Figure 2-4 the remote DDM-2000 FiberReach nodes and the DDM-2000 OC-3 in the wire center supply the path switching function for a survivable end-to-end transport between the customer and wire center. Channels pass between the OC-1 and OC-3 rings at the host DDM-2000 OC-3 and *SLC*-2000 systems with a ring (0x1) low-speed interface. This arrangement supports full TSI assignment between low-speed and high-speed time slots while preserving independent service and protection paths between the host and extension rings.

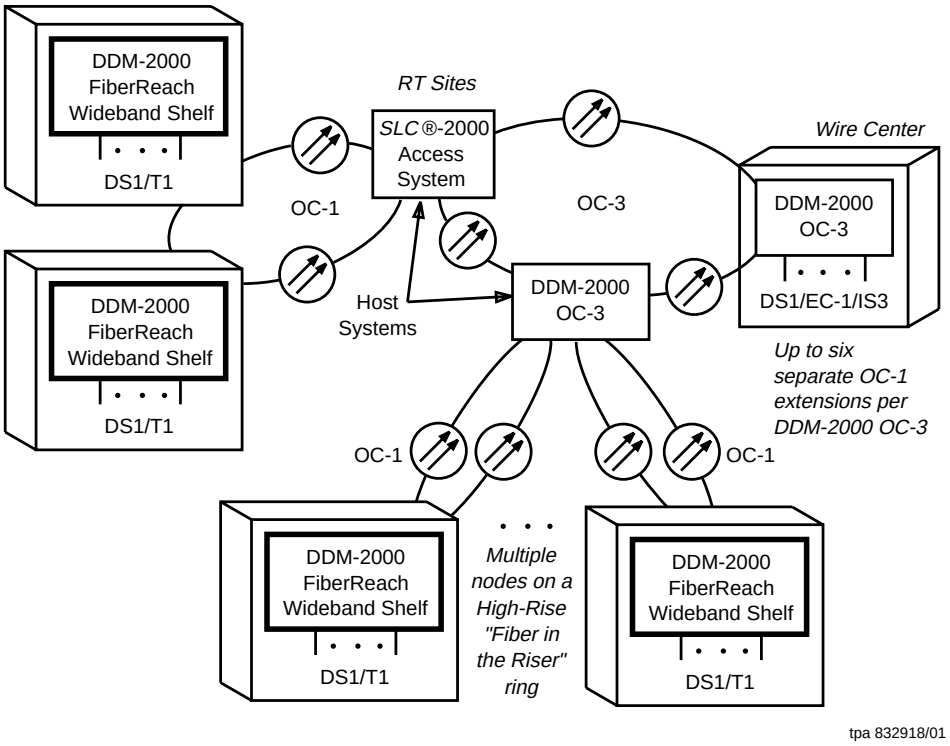

Figure 2-4. DDM-2000 FiberReach Rings Single Homing to a DDM-2000 OC-3 Ring

DDM-2000 FiberReach can also be extended from an OC-12/virtual tributary (VT) path-switched ring as shown in Figure 2-5. The DDM-2000 OC-3 system at the host node grooms and packs VT1.5 channels from the OC-1 extension rings for maximum utilization of the OC-12 backbone ring. Both the host OC-3 and OC-12 systems use the ring (0x1) low-speed interfaces, with 60 millisecond path protection switching performed, at the remote DDM-2000 FiberReach and wire center DDM-2000 OC-3 endpoints.

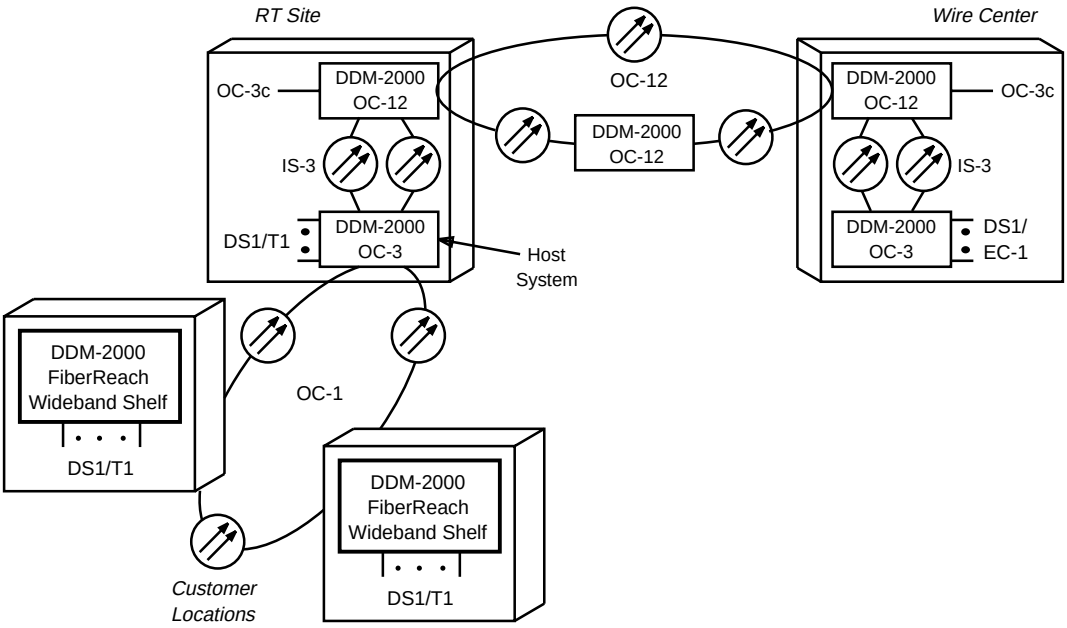

Figure 2-5. DDM-2000 FiberReach Rings Single Homing to a DDM-2000 OC-12 Ring

Dual-Homed Access via a Backbone Ring

Dual homing offers even more survivability than a single-homed network. Even the catastrophic failure of a host node can be protected. Figure 2-6 illustrates dual-homed OC-1 extensions from four remote nodes to an OC-3 access ring. The host nodes can be two DDM-2000 OC-3 Multiplexers, two *SLC*-2000 Access Systems, or one DDM-2000 OC-3 Multiplexer and one *SLC*-2000 Access System.

Path protection switching is employed for dual-homed applications, just like in single-homed applications. That is, 60 millisecond path switching is supplied by the remote DDM-2000 FiberReach nodes and the DDM-2000 OC-3 or OC-12 systems in the wire center. The OC-3 host node configuration differs from that used for single-homing because each host node terminates only one leg of the OC-1 extension. At each host node, a connection is made from the single OC-1 extension to just one rotation of the OC-3/OC-12 host ring. Dual- and single-homed extensions can also be mixed at a host node, allowing the access network to be tailored efficiently to different groups of customers.

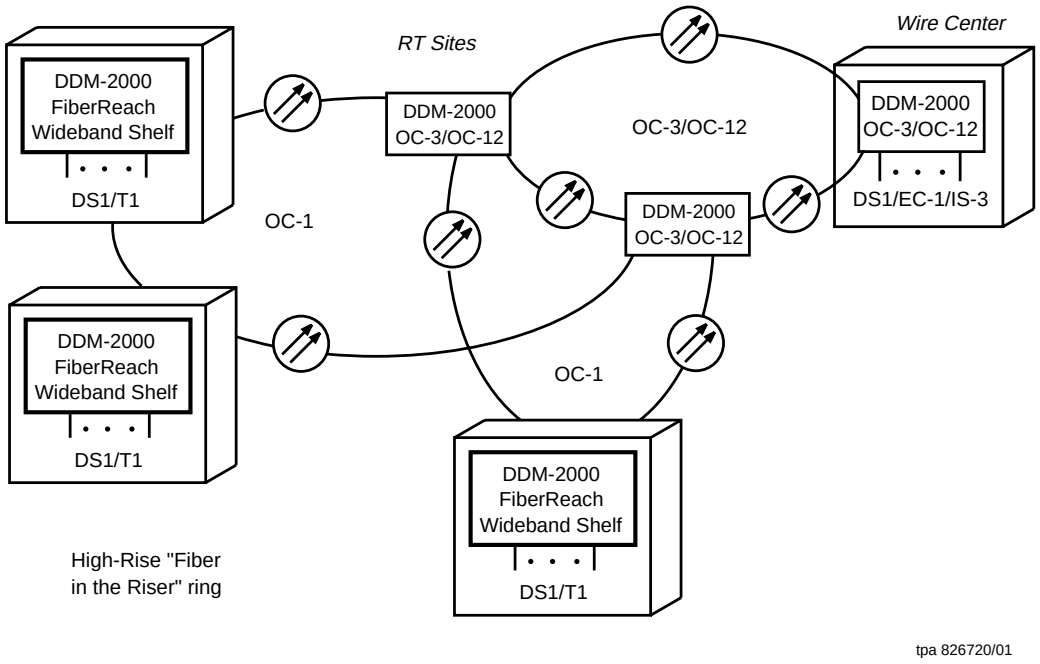

Figure 2-6. DDM-2000 FiberReach Dual Homing to a DDM-2000 OC-3/OC-12 Ring

Integration with Dual Wire Center Applications

The survivability and networking benefits of Lucent's dual ring interworking solution are cost-effectively extended to smaller locations via DDM-2000 FiberReach dual-homing capabilities. Figure 2-7 shows an OC-3 feeder ring from duplicated wire centers, with dual-homed DDM-2000 FiberReach extensions from selected feeder ring remote sites.

The host nodes and remote DDM-2000 FiberReach systems are configured just like the previously described dual-homing configuration with single 0x1 cross-connections (ring 0x1 low-speed interface) employed by the host. In the dual wire center architecture, the access network is also protected from a catastrophic failure of one wire center, because the access and interoffice networks have duplicate points of interworking. The DDM-2000 OC-3 systems in the two wire centers employ the drop and continue cross-connection. (For more details on the dual wire center application, see LTP 363-206-200, *DDM-2000 Multiplexer Application, Planning, and Ordering Guide.)*

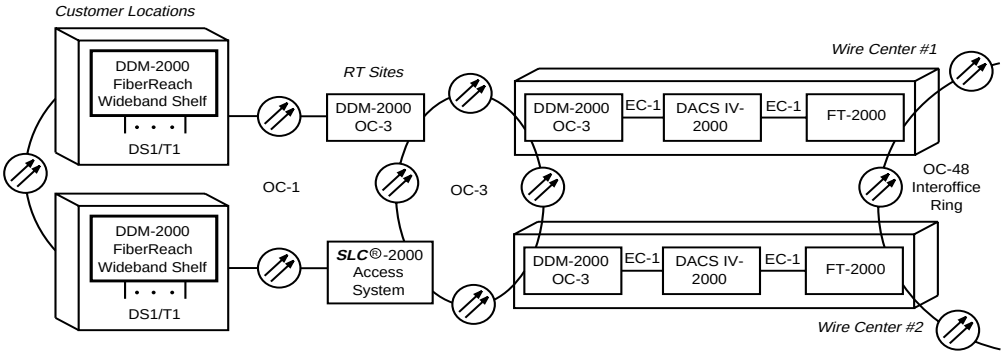

Figure 2-7. DDM-2000 FiberReach Ring Dual Homing to a DDM-2000 OC-3 Ring in a Dual Wire Center Application

Dual-homing applications can also be upgraded to an OC-12 backbone ring as shown in Figure 2-8. As with the single-homing application, the DDM-2000 OC-3 host system supplies the VT1.5 grooming necessary for optimum backbone utilization.

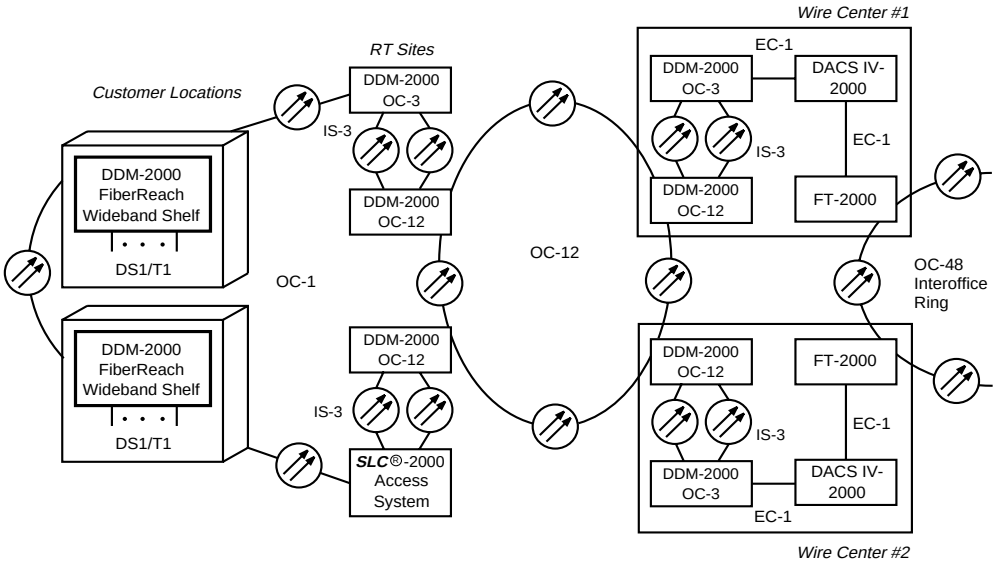

Figure 2-8. DDM-2000 FiberReach Ring Dual Homing to a DDM-2000 OC-12 Ring in a Dual Wire Center Application

Single Homing to Linear DDM-2000 OC-3 Networks

In business applications where the DDM-2000 OC-3 host is a node on a linear topology, two single-homed OC-1 ring extensions can be provided to multiple DDM-2000 FiberReach Multiplexers (see Figure 2-9). In this tapered linear application configuration, function slot "C" of the DDM-2000 OC-3 host is used for incoming traffic, and the "A" and "B" slots are used for downstream traffic or local terminations. The host DDM-2000 OC-3 Multiplexer must be using software Release 9.0 or later. The other DDM-2000 OC-3 Multiplexers in the linear application must be using Release 8.0 software.

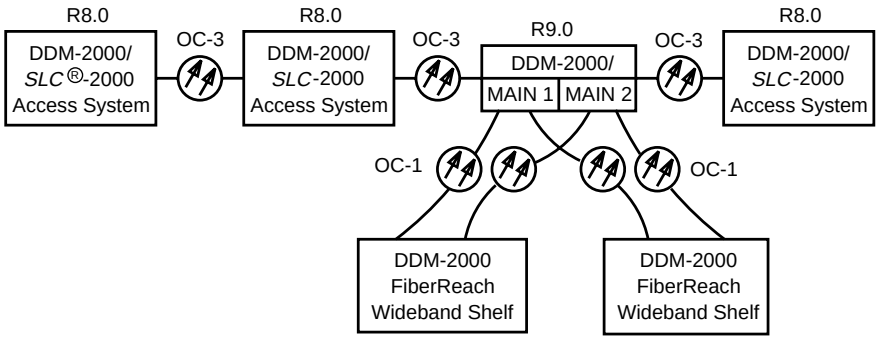

Figure 2-9. Single-Homed OC-1 Ring to a DDM-2000 OC-3 Linear Application

Stand-Alone OC-1 Ring/Hub Networks

In applications such as campus or other self-contained environments where an OC-3 or OC-12 backbone ring is not needed or practical, DDM-2000 FiberReach can be deployed in a stand-alone OC-1 ring. This OC-1 ring extension can be configured directly from a DDM-2000/*SLC*-2000 shelf with 27-type circuit packs in the Main slots. A mix of DS1 and T1 carrier traffic from remote DDM-2000 FiberReach nodes can be flexibly groomed and dropped at the host to a mix of DS1, EC-1, and OC-3 interfaces, as shown in Figure 2-10. Channels can be established directly between two DDM-2000 FiberReach remote nodes on the same OC-1 ring. This configuration would be very effective for customers within a short radius of the wire center or for isolated demand at a distant location where there is no appropriate access network yet in place.

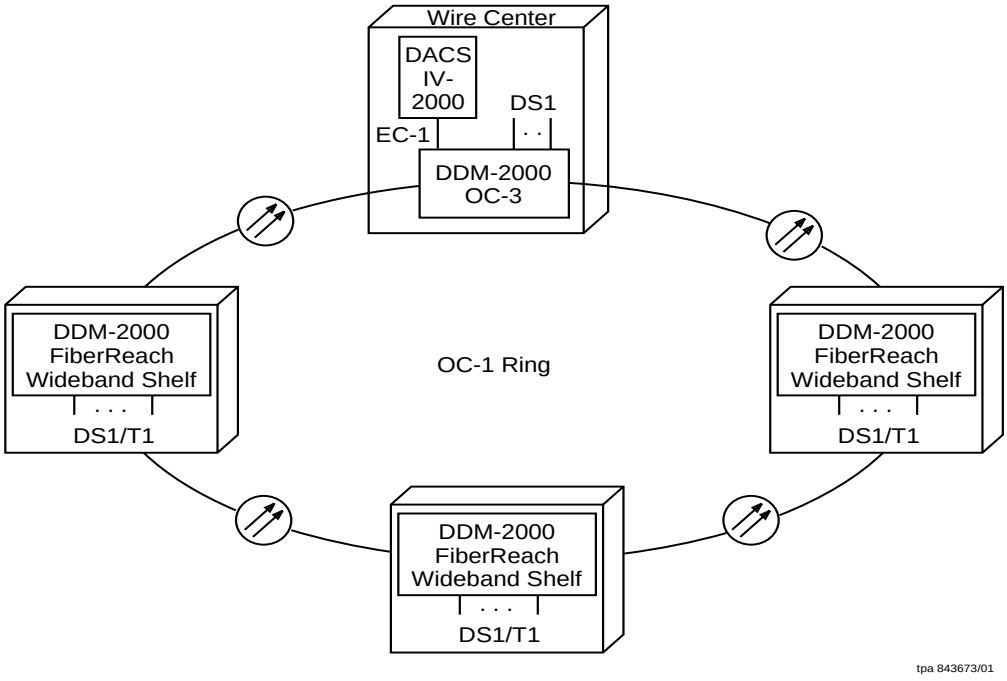

Figure 2-10. DDM-2000 FiberReach Stand-Alone OC-1 Ring

This application can be further expanded to hub up to two OC-1 rings from a stand-alone DDM-2000/*SLC*-2000 host system, as shown in Figure 2-11. In a future release, up to six OC-1 rings can be supported by equipping the function slots of the DDM-2000/*SLC*-2000 shelf with 27G2-U OLIU circuit packs.

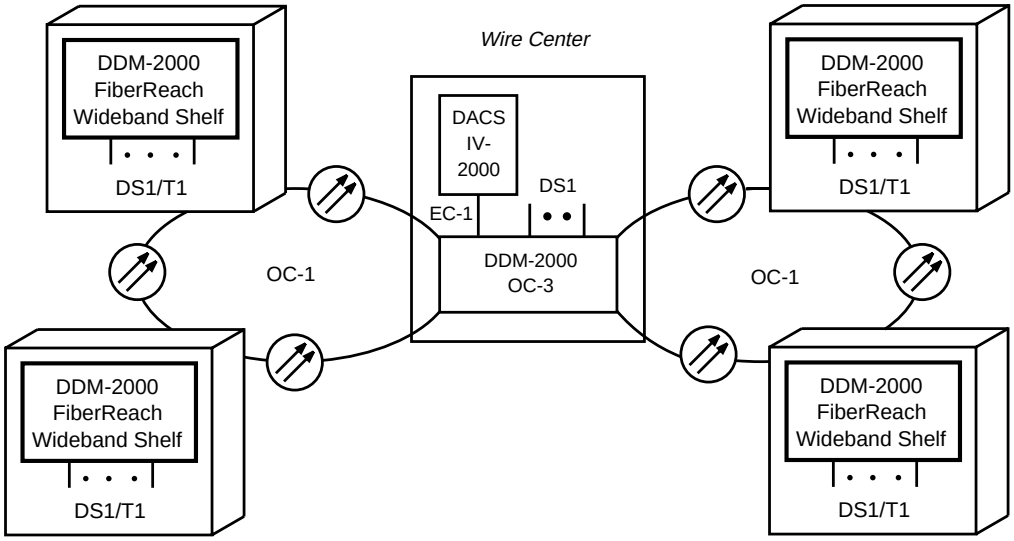

Figure 2-11. DDM-2000 FiberReach Single Homing to a Stand-Alone OC-1 Hub Host

Another configuration of the OC-1 hub network uses the full capacity of the OC-3 shelf by dropping up to 28 VT1.5 channels to the low-speed DS1 slots for each of the 3 OC-1 ring extensions. The total capacity is 84 DS1 signals. This triple OC-1 Multiplexer configuration, shown in Figure 2-12, supports three independent OC-1/DS1 ring networks with a consolidated host node for operations access, network synchronization, and efficient physical packaging.

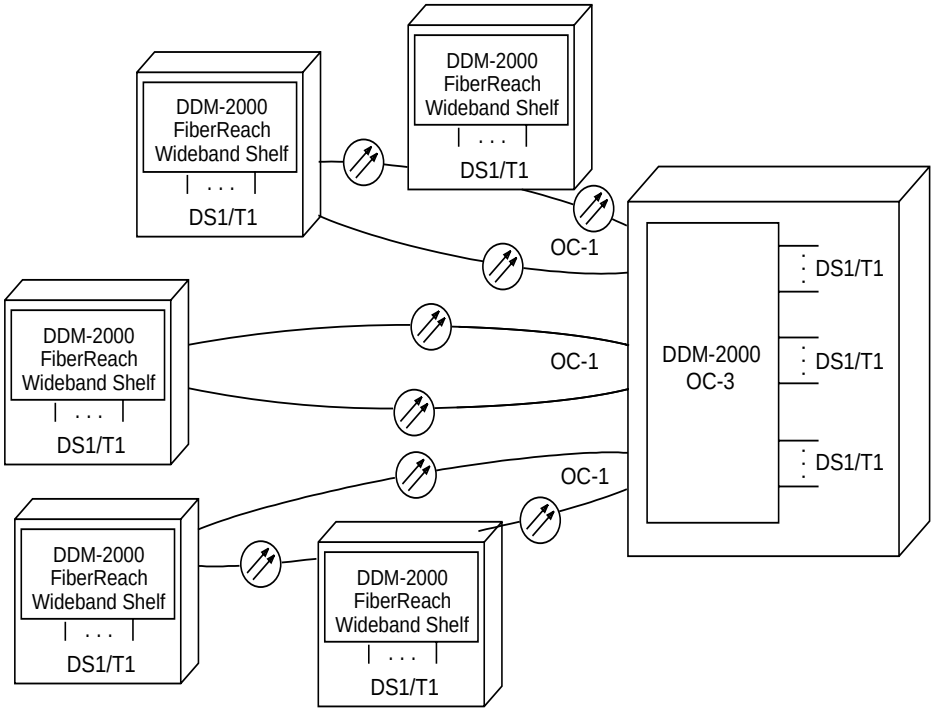

Figure 2-12. Triple OC-1 Multiplexer Application

Enhanced Routing

The DDM-2000 hosts can support a collection of enhanced routing features, as shown in Figure 2-13, Figure 2-14, Figure 2-15, and Figure 2-16. These features support cross-connections within and across Function Units without using bandwidth on the main OC-3 or OC-12 rings. This allows even greater networking flexibility and efficiency. While the high-speed OC-3 interface can carry up to 84 VT1.5 channels, each of the three Function Units has a two-OC1 capacity, or up to an additional 168 VT1.5 channels. For example, a DDM-2000 OC-3 system with 22-type OLIUs in the Main slots and 27G2-U dual OC-1 OLIUs in each Function Unit supports up to 168 VT1.5 channels: 84 between high-speed OC-3 and low-speed OC-1, and another 84 channels that pass directly between this host's remote FiberReach system.

NOTE:
SLC-2000 has only two function groups (A and C) rather than three in DDM-2000.

The OC-1 ring interconnection enhanced routing options utilize 0x1 or pass-through cross-connections at the DDM-2000 host. Path protection switching is performed at the DDM-2000 FiberReach system at the path midpoints. The local drop enhanced routing option employs path protection switching in the OC-3 host's Function Unit in order to drop to local EC-1, DS1, or OC-3 ports. This local drop option requires the use of OC-3 Release 11.0 and later software at the DDM-2000 host.

OC-1 Ring Pass-Through

This enhanced routing option establishes pass-through cross-connections for channels on an OC-1 ring terminating on a pair of 27G2-U OLIUs in the Function Units of a DDM OC-3. This application must use a pair of 27G2-U OLIUs in the function units slots. (See Figure 2-13.) These cross-connections are just like the pass-through cross-connections that can be provisioned for rings terminating on Main slots. This allows traffic to be routed from one FiberReach node to another FiberReach node on the same OC-1 ring without using bandwidth on the OC-3/ OC-12 ring.

NOTE:
For a step-by-step provisioning example, refer to the “OC-1 Ring Pass-Through Example” section in Chapter 8.

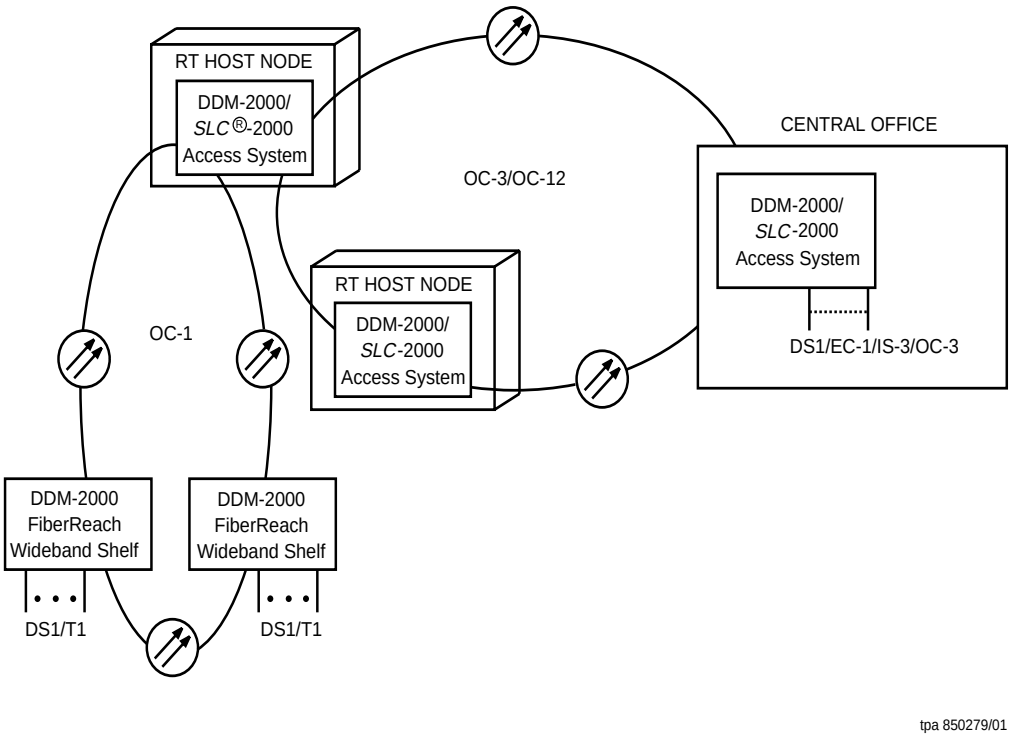

Figure 2-13. OC-1 Ring Pass-Through in a Function Unit

OC-1 Ring Hairpin Routing, Single-Homed

This routing option establishes cross-connections between channels on two separate OC-1 facilities that terminate on 27G2-U OLIU circuit packs in either the same or different Function Units (see Figure 2-14). In the single-homed configuration, both rotations of each of the two OC-1 rings terminate on a pair of 27G2-U OLIUs. There may be a pair of 27G2-U OLIUs that terminate both rings, or one pair of 27G2-U OLIUs in each of two Function Units that terminate the rings. Each rotation of one ring is cross-connected to the corresponding rotation of the other ring. This allows traffic to be routed from one FiberReach node on one OC-1 ring to any other FiberReach node on another OC-1 ring without using bandwidth on the OC-3/OC-12 ring.

NOTE:
For a step-by-step provisioning example, refer to the “OC-1 Ring Hairpin Routing, Single-Homed Example” section in Chapter 8.

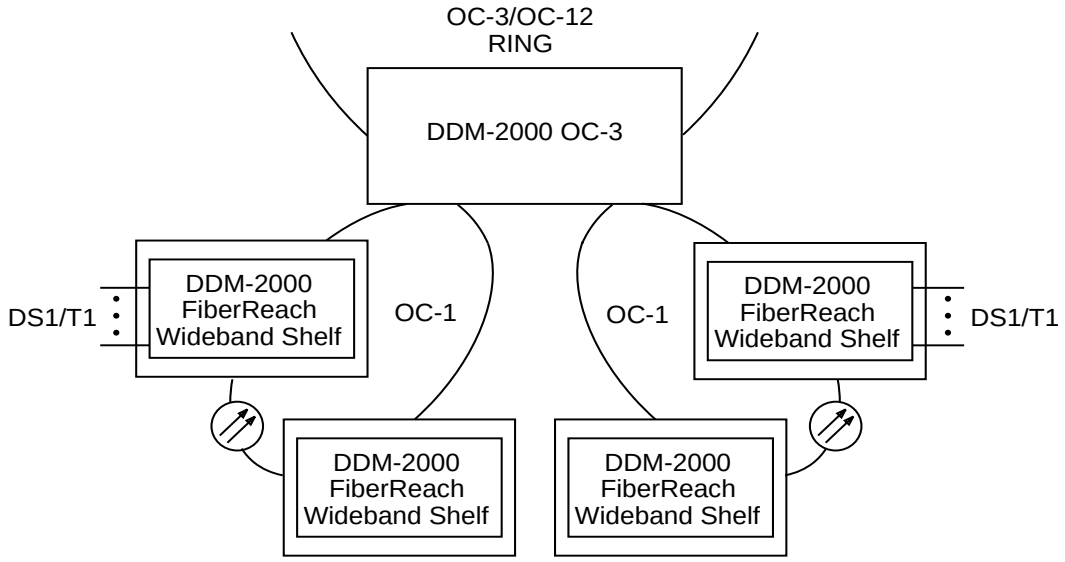

Figure 2-14. Single-Homed Hairpin Routing

OC-1 Ring Hairpin Routing, Dual-Homed

This routing option establishes cross-connections between channels on two separate OC-1 facilities that terminate on 27G2-U OLIU circuit packs in either the same or different Function Units. (See Figure 2-15.) In the dual-homed arrangement, only one rotation of each of the two OC-1 rings terminates on a single OC-3 shelf. At the OC-3 shelf, there may be a single 27G2-U OLIU that terminates both rings or a 27G2-U OLIU in each of two Function Units that terminates the rings. The other rotation of each ring terminates on a different OC-3 shelf. This allows traffic to be routed from one FiberReach node on one OC-1 ring to any other FiberReach node on another OC-1 ring without using bandwidth on the OC-3/OC-12 ring.

NOTE:
For a step-by-step provisioning example, refer to the “OC-1 Ring Hairpin Routing, Dual-Homed Example” section in Chapter 8.

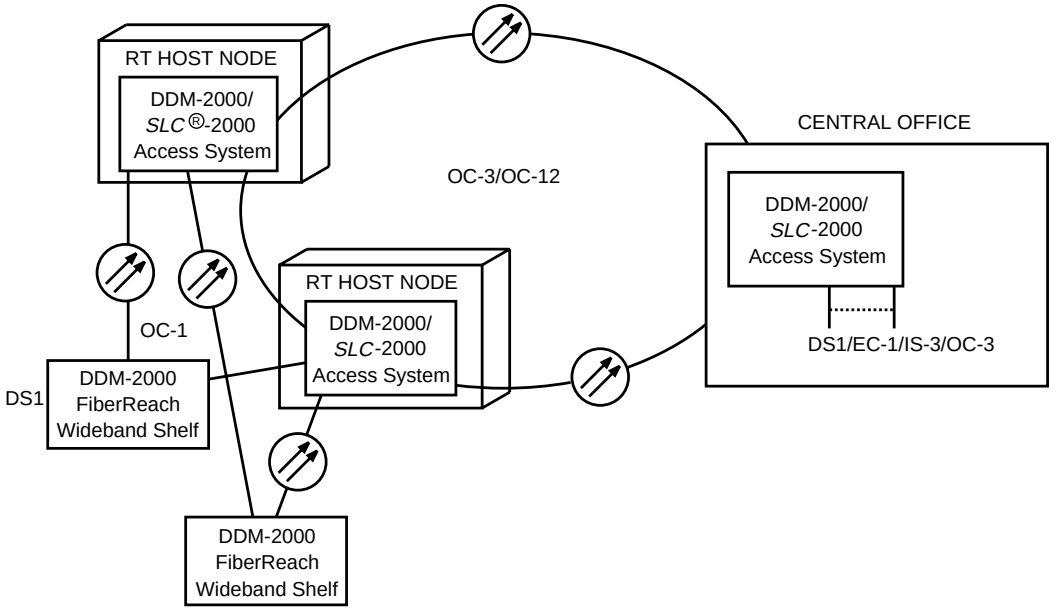

Figure 2-15. Dual-Homed Hairpin Routing

Hairpin Local Drop Routing

Figure 2-16 shows a hairpin local drop routing. This routing option establishes path-protection switched drop cross-connections between channels on an OC-1 ring and ports/channels on DS1/EC1/OC-3 circuit packs. (See Figure 2-16.) The OC-1 facility terminates on a pair of 27G2-U OLIU circuit packs in the Function Unit slots. These connections are just like the drop cross-connections that can be established between channels on a ring terminating on the Main slots and port or channels in a Function Unit. This allows traffic to be routed from a FiberReach node on an OC-1 ring to a local drop without using bandwidth on the OC-3/OC-12 ring.

NOTE:
For a step-by-step provisioning example, refer to the “Hairpin Local Drop Routing Example” section in Chapter 8.

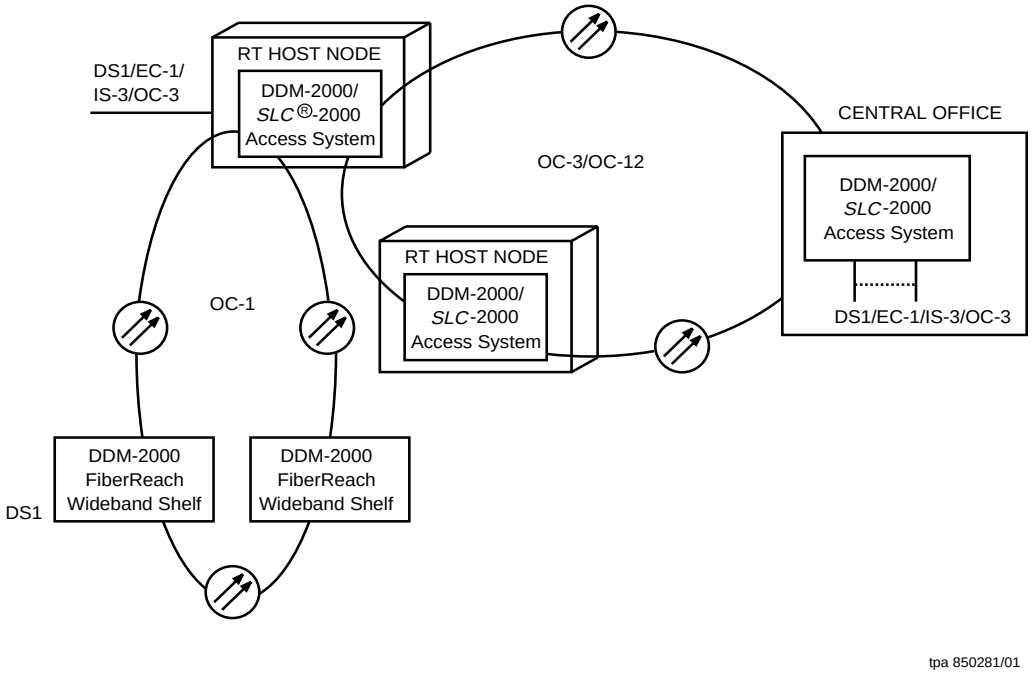

Figure 2-16. Hairpin Local Drop Routing

A mix of the enhanced routing services shown in Figure 2-14, Figure 2-15, and Figure 2-16 can be created in a single DDM-2000 FiberReach host. OC-3 Release 9.1 and later software and 27G2-U OLIUs are needed for these services.

DDM-2000 FiberReach Network Topologies (OC-3 and OC-12)

28-Type Optical Line Interface (28G-U/28G2-U)

This section describes applications in which the FiberReach multiplexer is equipped with the 28-type OC-3 OLIUs in the Main slots.

Circuit Pack Overview

The 28-type is used in the Main slots of the DDM-2000 FiberReach shelf in a unidirectional path protection switched OC-3 ring configuration.

The primary functions of the 28-type OLIU are to multiplex up to 7 VT-G signals and 3 STS-1 signals, or 3 STS-1 signals into a single OC-3 optical signal in the transmit direction; to demultiplex an OC-3 signal into 3 STS-1 signals or 2 STS-1 signals and up to 7 VT-G signals in the receive direction; to provide for cross-connections among the 3 STS-1s and all VT1.5 signals that may be embedded within any of the STS-1s and provide system clock and frame.

The 28-type provides timing for the entire wideband shelf. Two modes will be provided: line-timed and holdover. Figure 2-17 displays OC-3 Ring Mixed Application with DDM-2000 FiberReach. DDM-2000 OC-3 and *SLC*-2000 ARM shelves on the same OC-3 ring.

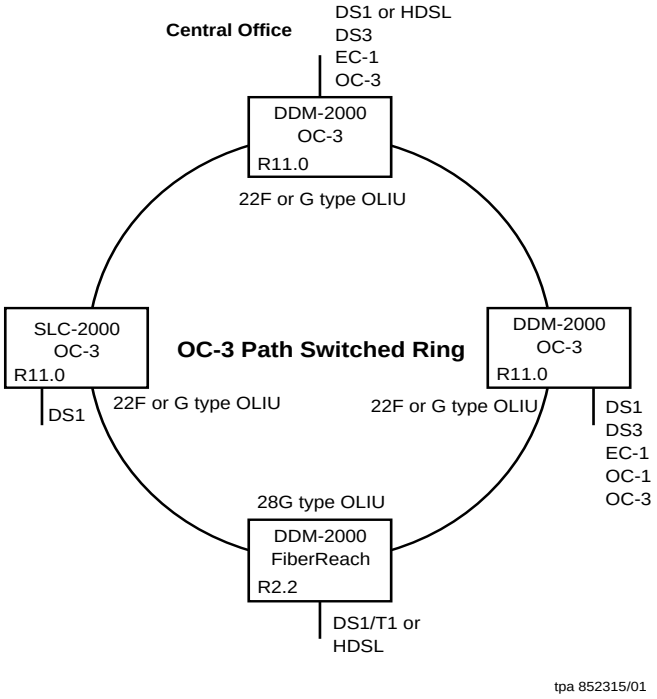

Figure 2-17. OC-3 Ring Mixed Application

29-Type Optical Line Interface (29G-U/29H-U)

This section describes applications in which the FiberReach multiplexer is equipped with the 29-type OC-12 OLIUs in the Main slots.

Circuit Pack Overview

The 29-type OLIU is used in the Main slots of the DDM-2000 FiberReach Shelf in a unidirectional path protection switched OC-12 ring configuration.

The primary functions of the 29-type OLIU are to multiplex up to 7 VT-G signals and 3 STS-1 signals in the transmit direction; to demultiplex an OC-12 signal into 3 STS-1 signals and up to 7 VT-G signals in the receive direction; to provide for cross-connections among the 3 STS-1s and all VT1.5 signals that may be embedded within any of the STS-1s and provide system clock and frame.

The 29-type provides timing for the entire wideband shelf. Two modes will be provided: line-timed and holdover. Figure 2-18 displays OC-12 Ring Mixed Application with DDM-2000 FiberReach. DDM-2000 OC-12 and *SLC*-2000 ARM shelves are on the same ring.

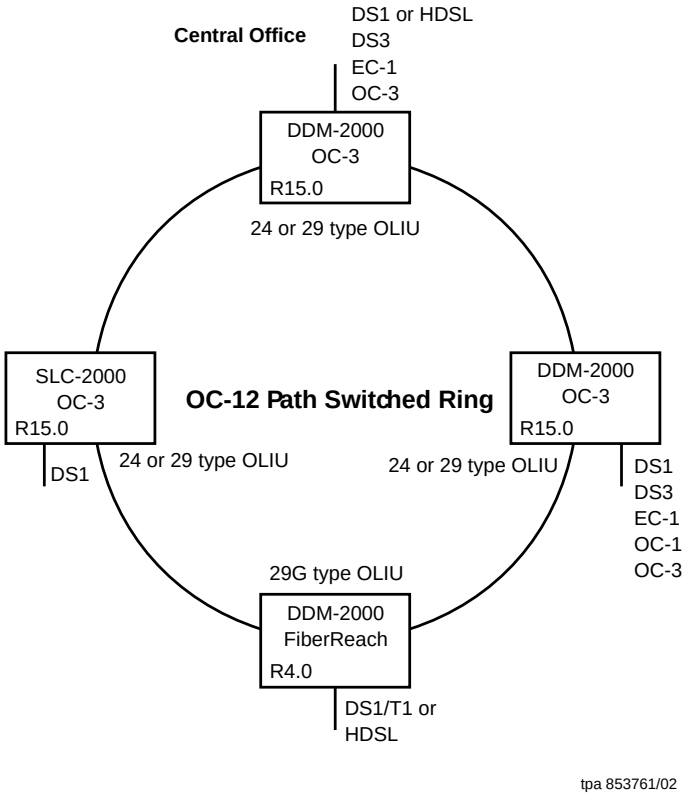

Figure 2-18. OC-12 Ring Mixed Application

DDM-2000 FiberReach Service Applications

This section describes specific service applications. In addition to traditional telephony, DS1, and T1 extension services, the following are examples of specific service applications utilizing DDM-2000 FiberReach Multiplexers.

LAN/WAN Data Networking: DS3 Data Services

FiberReach Release 3.1 introduced a new DS3 Data Services Interface circuit pack (BBG19) for use with data edge devices.

Increasing demands for data and multimedia applications have led to a significant growth in LAN service needs among business customers. These service needs have been focused on providing interconnection of business customer LANs over a wide area network (WAN). To transport these LAN interconnect data services over the public network, LAN routers and concentrators collect the data at a LAN location and map it into traditional telephone network transmission signals (for example, DS1 or DS3). These telephony signals can then be transmitted to wide area locations where the data can be mapped onto the LAN at that location.

DDM-2000 FiberReach Multiplexers are ideally suited to serving the growing demands for such WAN services. DDM-2000 FiberReach multiplexers can interface to an external LAN/ATM switch via DS3 interfaces (see Figure 2-19 and Figure 2-22). Using such an external LAN/ATM switch approach, DDM-2000 FiberReach Mulitplexers can provide the necessary transport capabilities to meet the business customer LAN interconnect service needs. Delivering LAN interconnect services using DDM-2000 provides the same high level of reliability and availability for these services as is supported for all other premium business services — this includes full STS-1 path-switching in ring configurations.

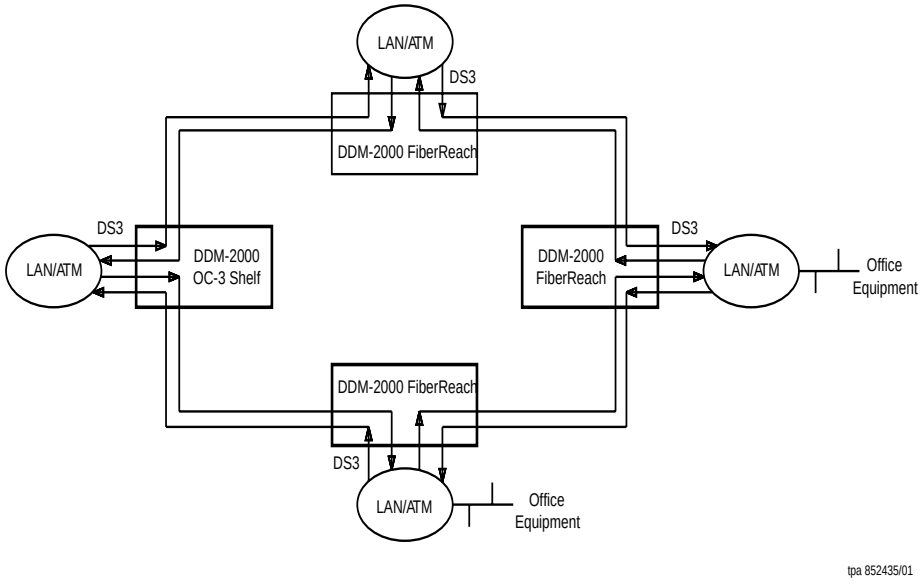

Figure 2-19. LAN/WAN Data Networking Using Locked DS3 Cross-Connections

Figure 2-20 shows an application in which access for two unprotected DS3 data service channels is provided using BBG19 front access DS3 data services circuit packs. In the unprotected mode a single FiberReach shelf equipped with BBG19s provides drop capacity for two DS3s and up to 28 DS1s.

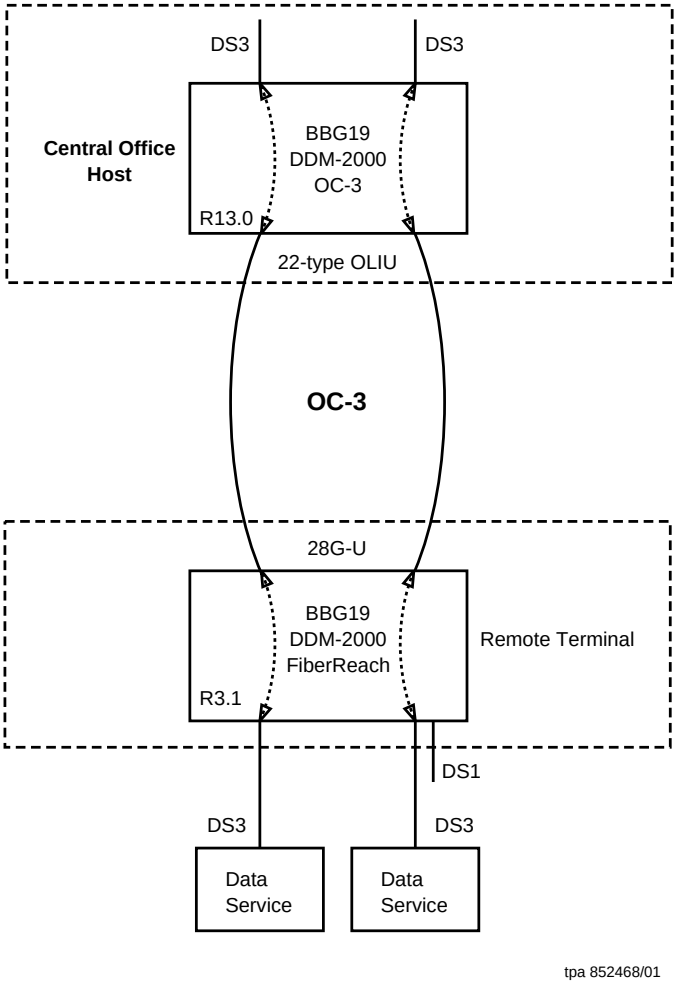

Figure 2-20. Unprotected DS3 Data Services using BBG19 Circuit Packs

Figure 2-21 shows an application which provides access for a single DS3 using BBG4B DS3 circuit packs. In the protected mode a single FiberReach shelf equipped with BBG4Bs provides drop capacity for a single DS3 and up to 28 DS1s.

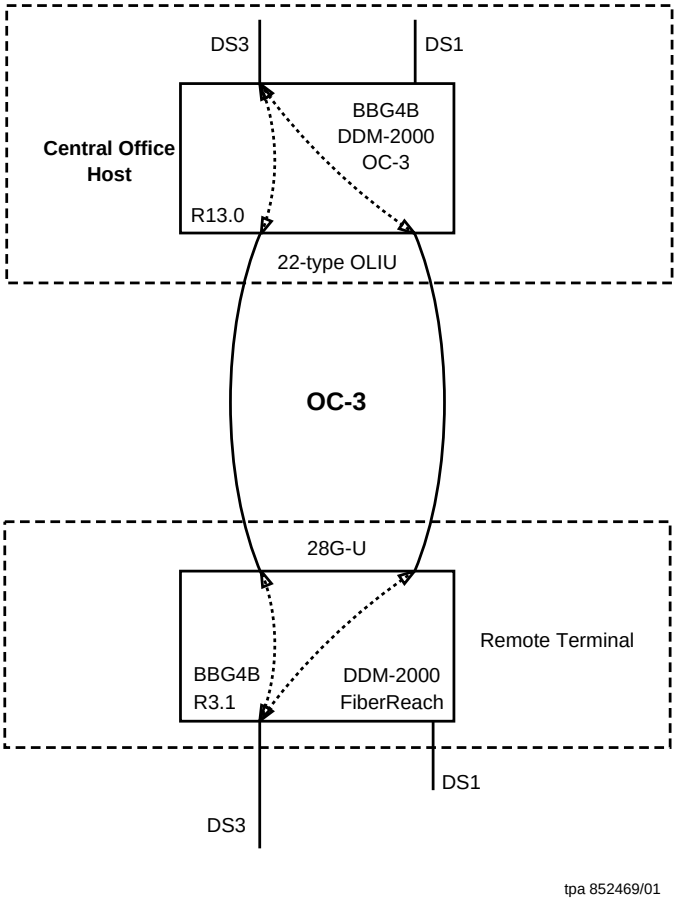

Figure 2-21. Protected DS3 Data Services using BBG4B Circuit Packs

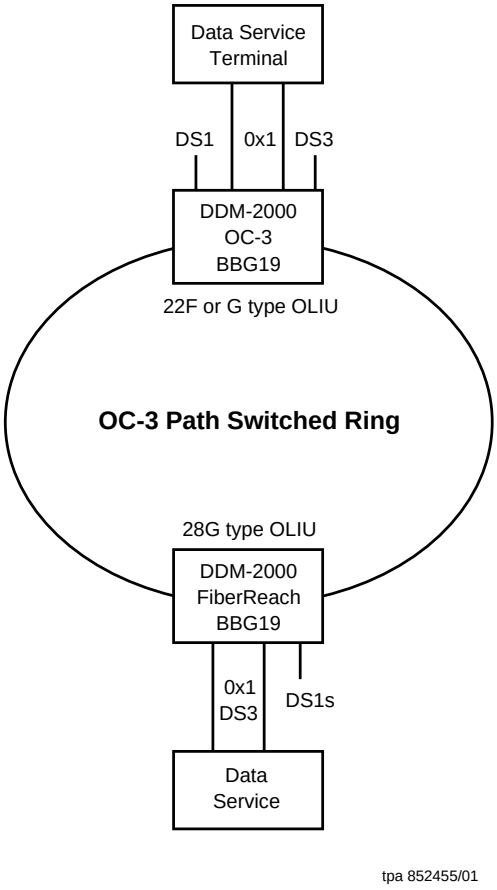

Figure 2-22. LAN/WAN Data Networking

High Data-rate Subscriber Line (HDSL) Application

The HDSL circuit pack (BBF8) provides HDSL interface capability on the DDM-2000 OC-3 shelf to compatible *PairGain** equipment at the customer premises. It allows the transport of DS1 rate payloads, for up to 12,000 feet, over two metallic 24 AWG twisted-pair lines. Figure 2-23 shows examples of HDSL circuit packs providing this capability in both the DDM-2000 OC-3 and the DDM-2000

* PairGain is a registered trademark of PairGain Technologies, Inc.

FiberReach shelves. Application for business customers, the private network, cell sites, PBXs, customer premises equipment (CPE), and other applications are supported.

The BBF8 circuit pack fits into the low-speed slots and provides two, four-wire HDSL interfaces. Each interface provides a full DS1 rate payload capacity mapped to a SONET VT1.5 and then VT cross-connected into an STS-1. Once in SONET, DS1 rate payload is treated as a normal DS1.

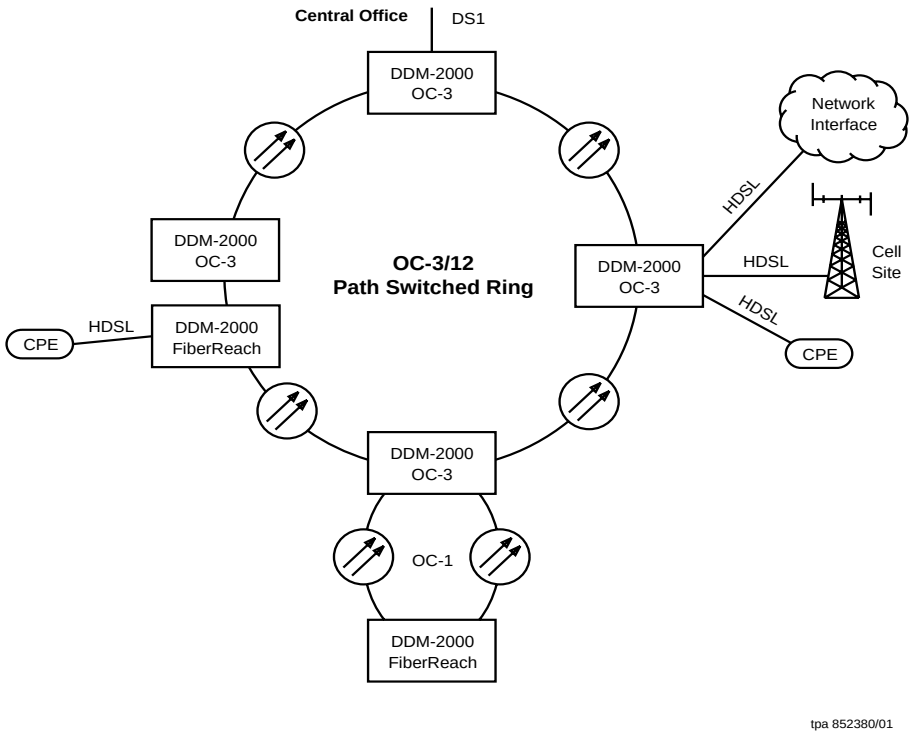

Figure 2-23. HDSL Application

DDM-2000 FiberReach Service Applications Using the 28G-Type OLIU (Release 2.2 — Non-TARP Release)

The following figures show service applications of the DDM-2000 FiberReach Multiplexer using the 28G-type OLIU.

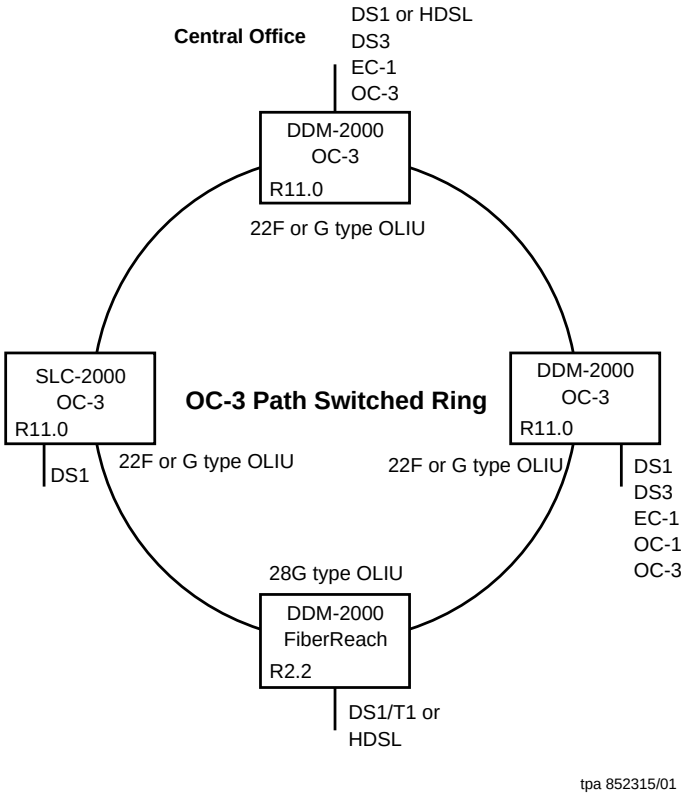

Figure 2-24. OC-3 Ring Mixed Application

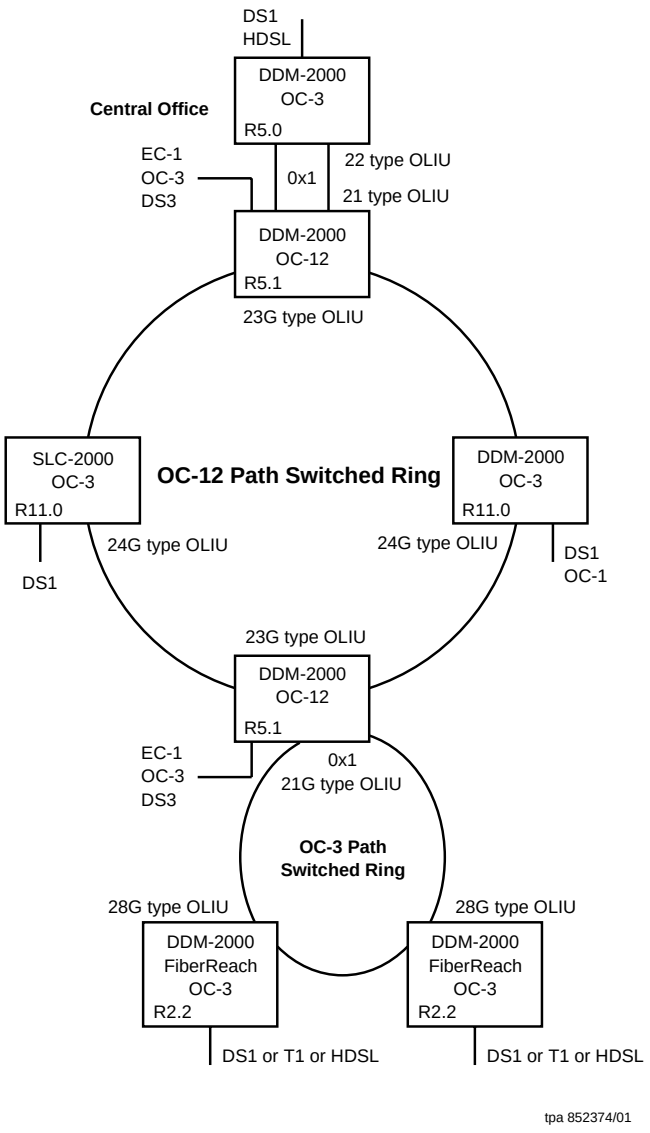

Figure 2-25. OC-3 FiberReach Extension (Single-Homed) on OC-12 Ring Application

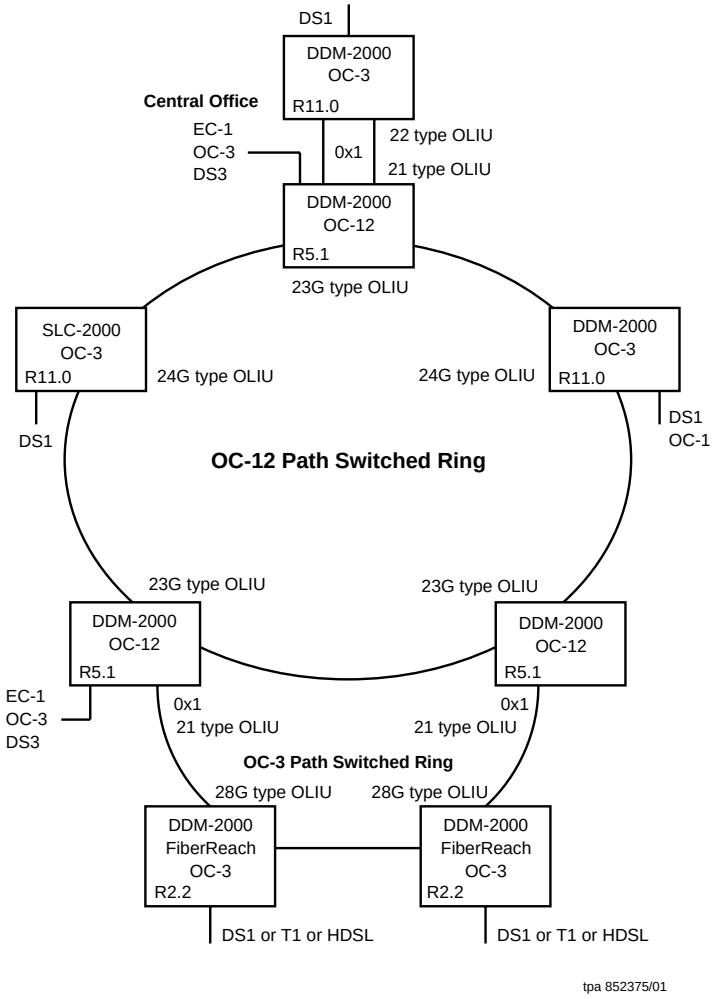

Figure 2-26. FiberReach Extension (Dual-Homed) on OC-12 Ring Application

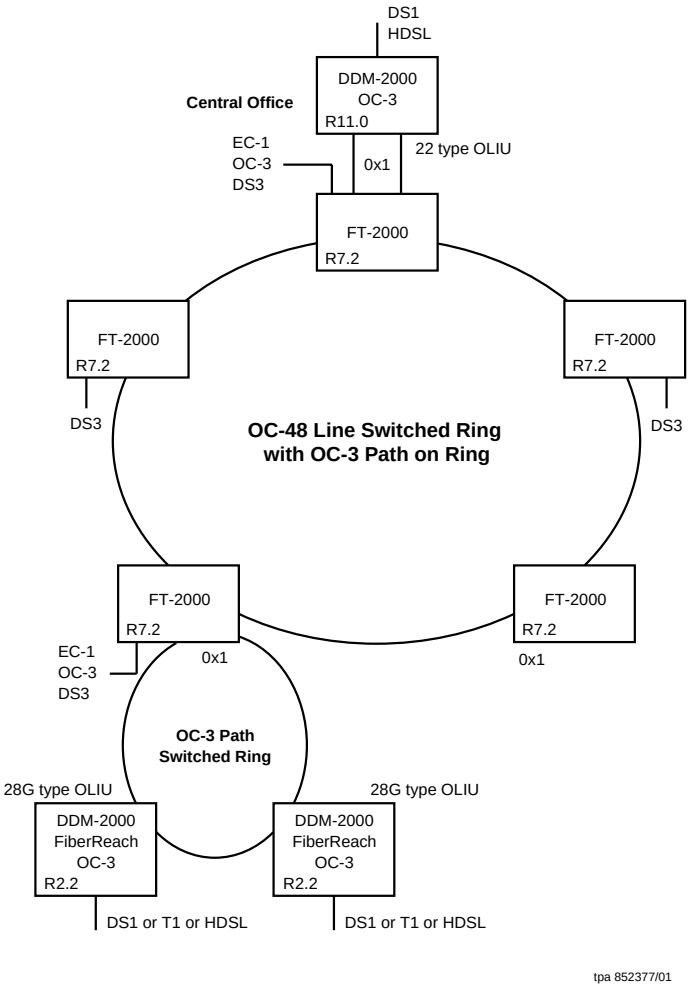

Figure 2-27. OC-3 FiberReach Extension (Single-Homed) on OC-48 Ring Application

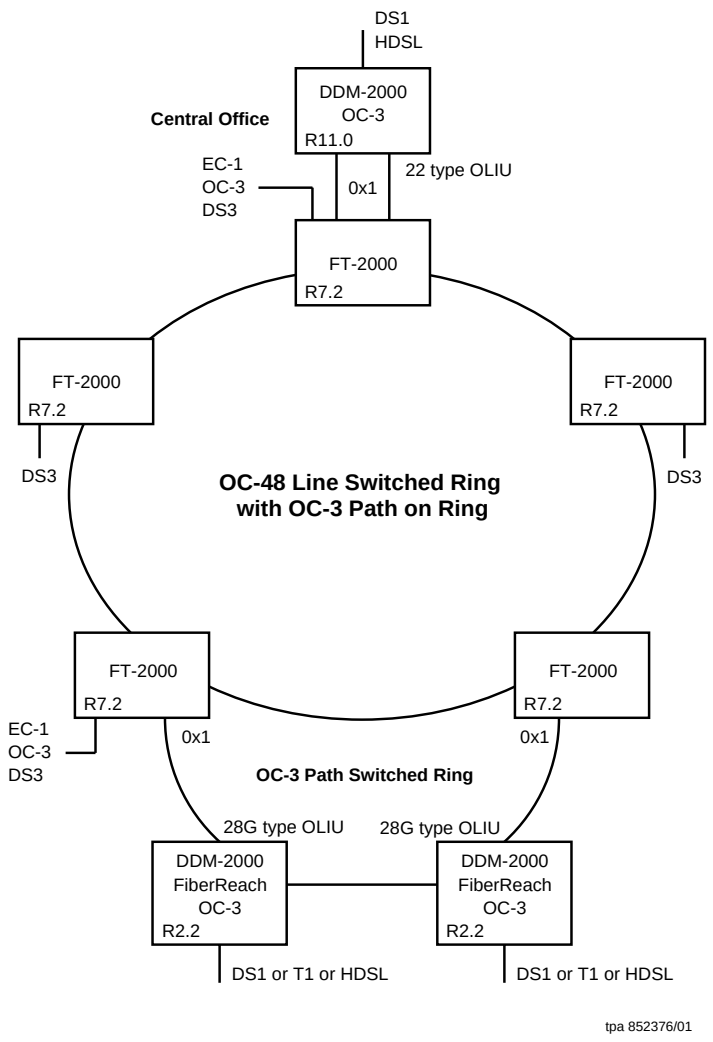

Figure 2-28. OC-3 FiberReach Extension (Dual-Homed) on OC-48 Ring Application

DDM-2000 FiberReach Service Applications Using the 28G-Type OLIU (Release 3.1, TARP)

The following figures show service applications of the DDM-2000 FiberReach Multiplexer using the 28G-type OLIU. In Figure 2-29, the FiberReach multiplexer is a network element on an OC-3 path switched ring with a DDM-2000 OC-3 host shelf in the Central Office. The host shelf provides timing to other NEs on the ring and serves as a gateway NE to a TL1 based operation support system. Fiber connections are between main OLIUs. The FiberReach shelf provides a DS3 interface and up to 28 DS1 service interfaces, or a mix of DS1, T1, and HDSL. Figure 2-30, Figure 2-31 and Figure 2-32 are example applications in which the FiberReach Multiplexer is a node in an OC-3 ring carried on an OC-12 or OC-48 ring.

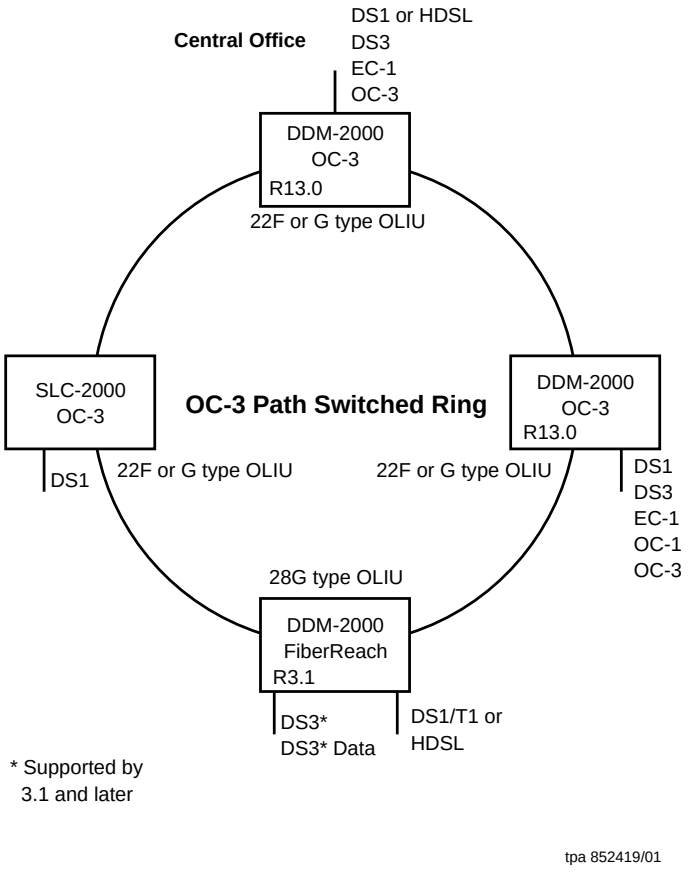

Figure 2-29. OC-3 Ring Mixed Application (Release 3.1 or Later)

Basic DS3 Cross-Connects

Figure 2-30, Figure 2-31, and Figure 2-32 show the basic DS3 cross-connect used in several types of rings. The FiberReach cross-connections in all three of these figures are the same basic DS3.

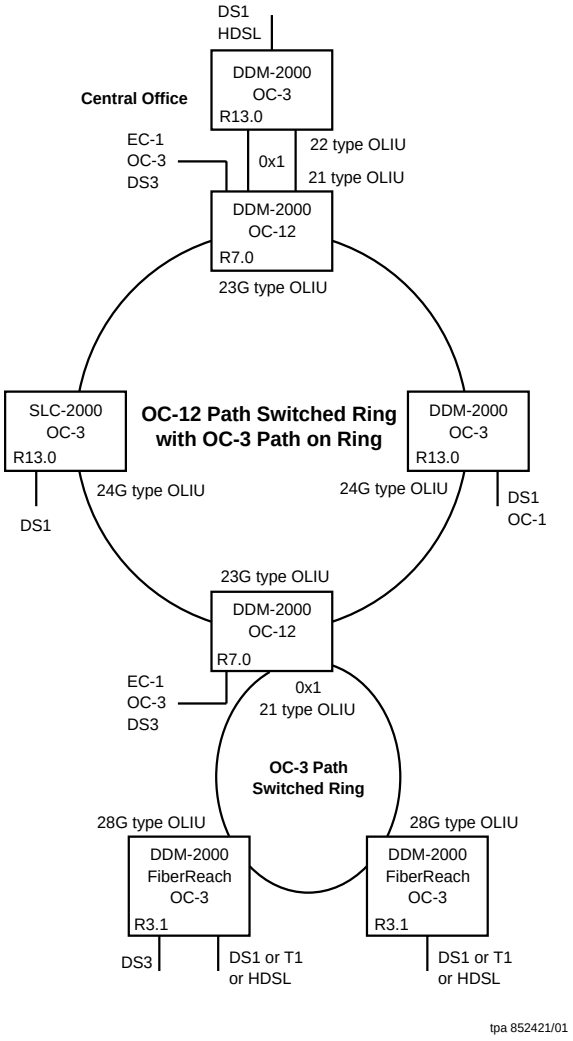

Figure 2-30. OC-3 FiberReach Extension (Single-Homed) on OC-12 Ring Application (Release 3.1 or Later)

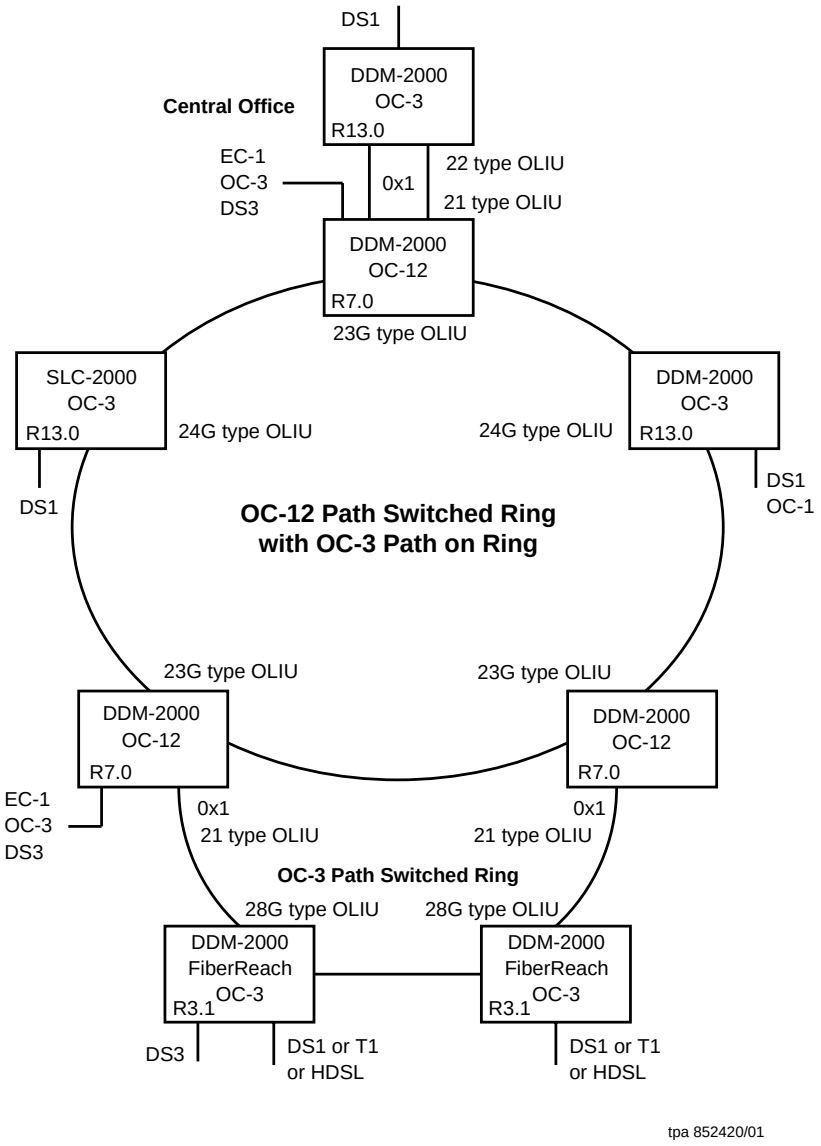

Figure 2-31. FiberReach Extension (Dual-Homed) on OC-12 Ring Application (Release 3.1 or Later)

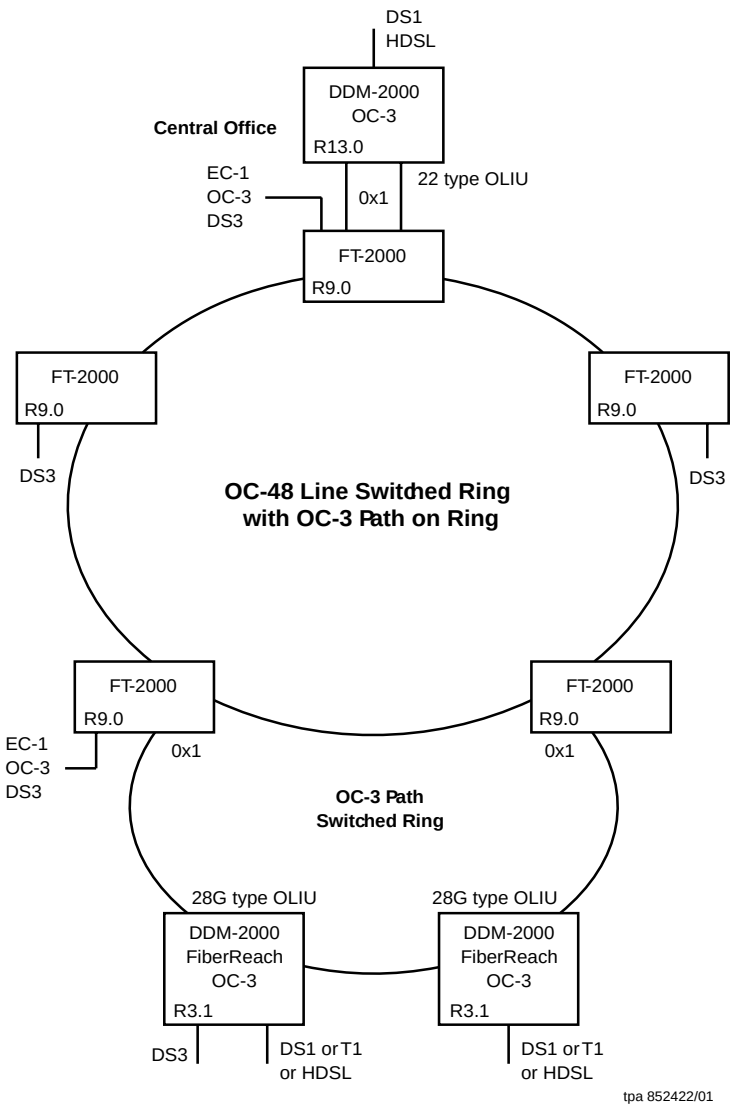

Figure 2-32. OC-3 FiberReach Extension (Dual-Homed) on OC-48 Ring Application (Release 3.1 or Later)

DDM-2000 FiberReach Service Applications Using the 29-Type OLIU (Release 4.0, TARP)

The following figures show service applications of the DDM-2000 FiberReach Multiplexer using the 29-type OLIU. In Figure 2-33, the FiberReach multiplexer is a network element on an OC-12 path switched ring with a DDM-2000 OC-3 host shelf in the Central Office. The host shelf provides timing to other NEs on the ring and serves as a gateway NE to a TL1 based operation support system. Fiber connections are between main OLIUs. The FiberReach shelf provides a DS3 interface and up to 28 DS1 service interfaces, or a mix of DS1, T1, and HDSL. Figure 2-34 is an example application in which the FiberReach Multiplexer is a node in an OC-3 ring carried on an OC-12 or OC-48 ring.

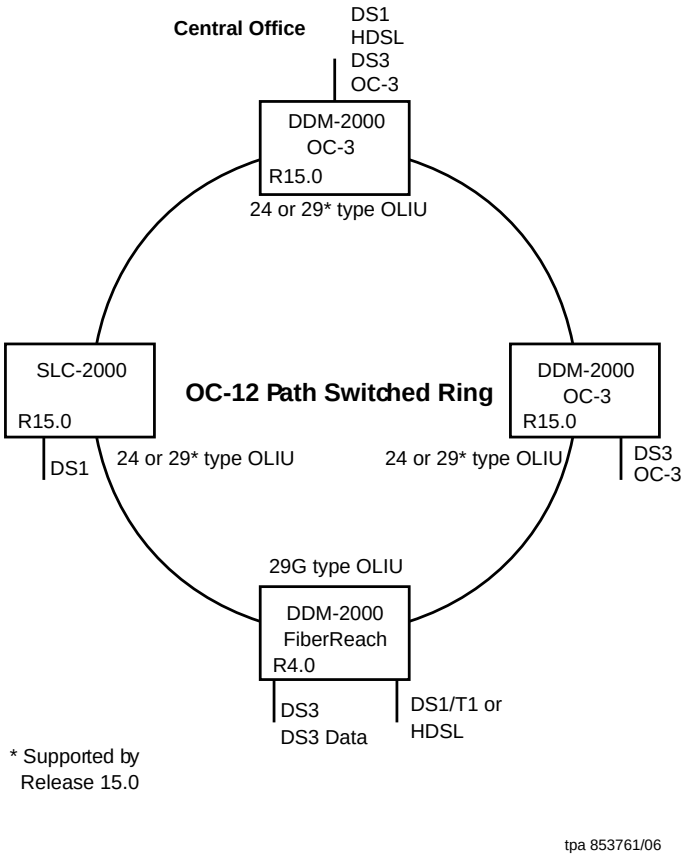

Figure 2-33. OC-12 Ring Mixed Application

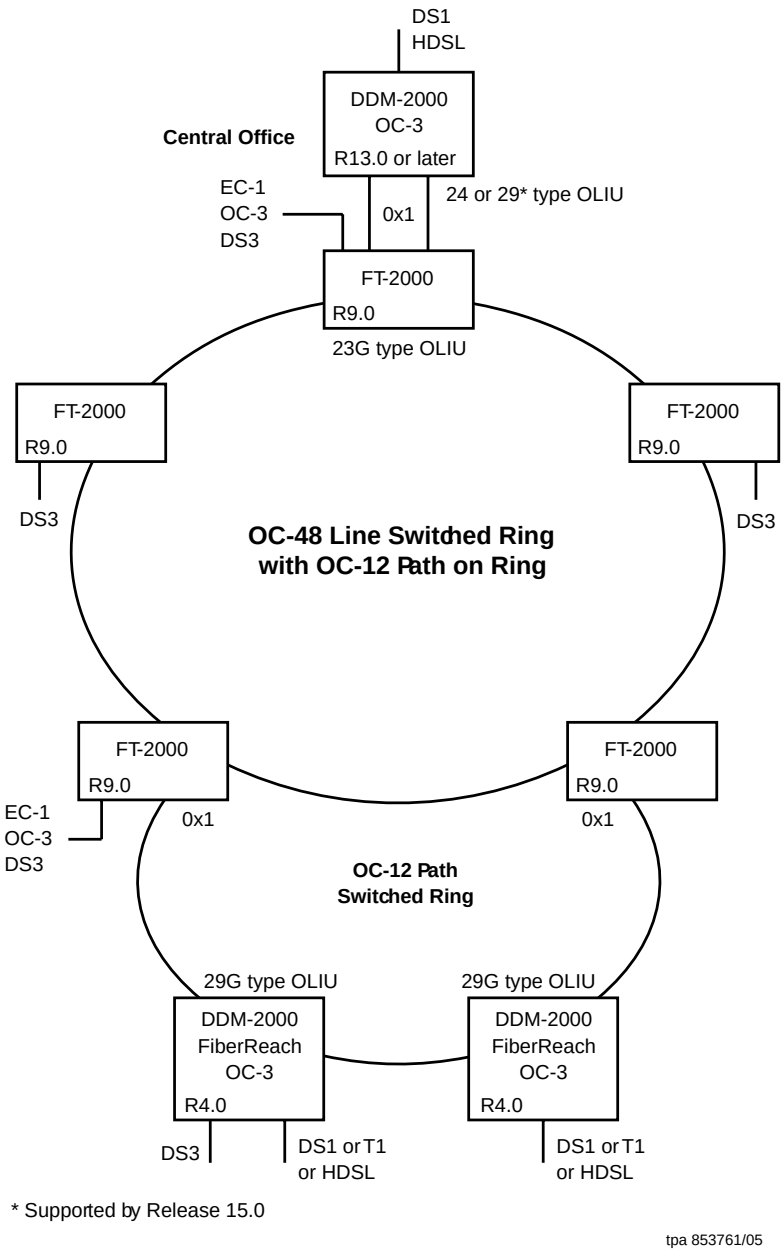

Figure 2-34. OC-3 FiberReach Extension (Dual-Homed) on OC-48 Ring Application (Release 4.0)

STS-3c 0X1 Optical Interface

This new interface provides the ability of transporting STS-3c services on an OC-3c low-speed Function Unit optical interface that has been provisioned for 0X1 applications.

Ring path switching is not done on the DDM-2000 FiberReach ring; rather STS-3c level path switching is done elsewhere in the network (for instance, when the FiberReach ring is used to transport ATM STS-3c traffic, path switching (rerouting) is normally executed through the external ATM switch/routers).

With 0X1 application, the FiberReach ring passes the content of the STS-3c time slots between the low-speed OC-3 lines and the OC-3 high-speed lines without terminating them or performing any path protection switching on them.
Figure 2-35 and Figure 2-36 are example applications in which the FiberReach Multiplexer is equipped with 22-type OLIUs in the function unit slots providing OC-3c access.

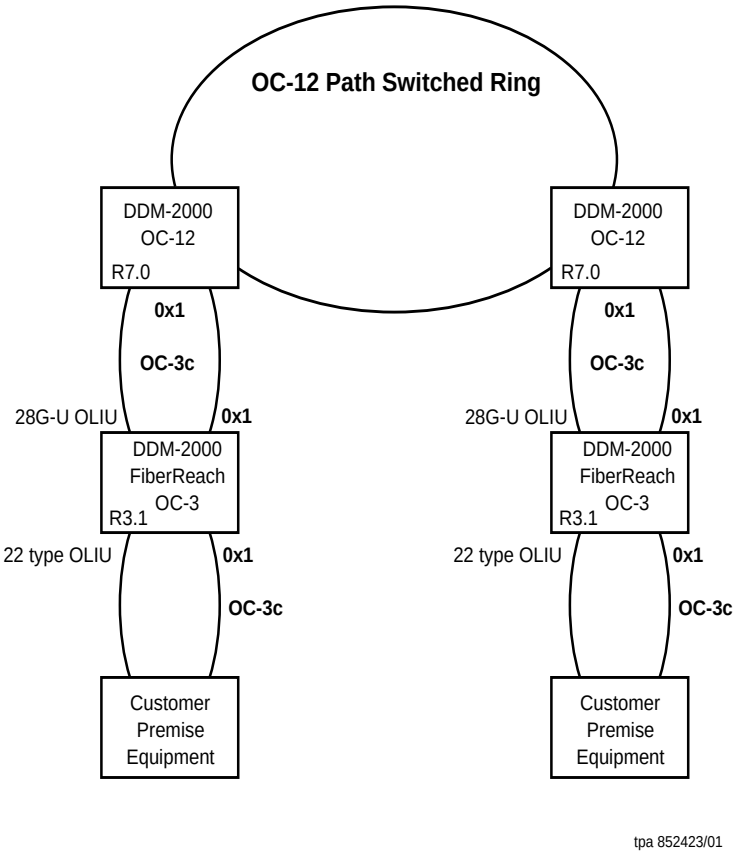

Figure 2-35. FiberReach OC-3c Extension on OC-12 Ring Application (Release 3.1 or Later)

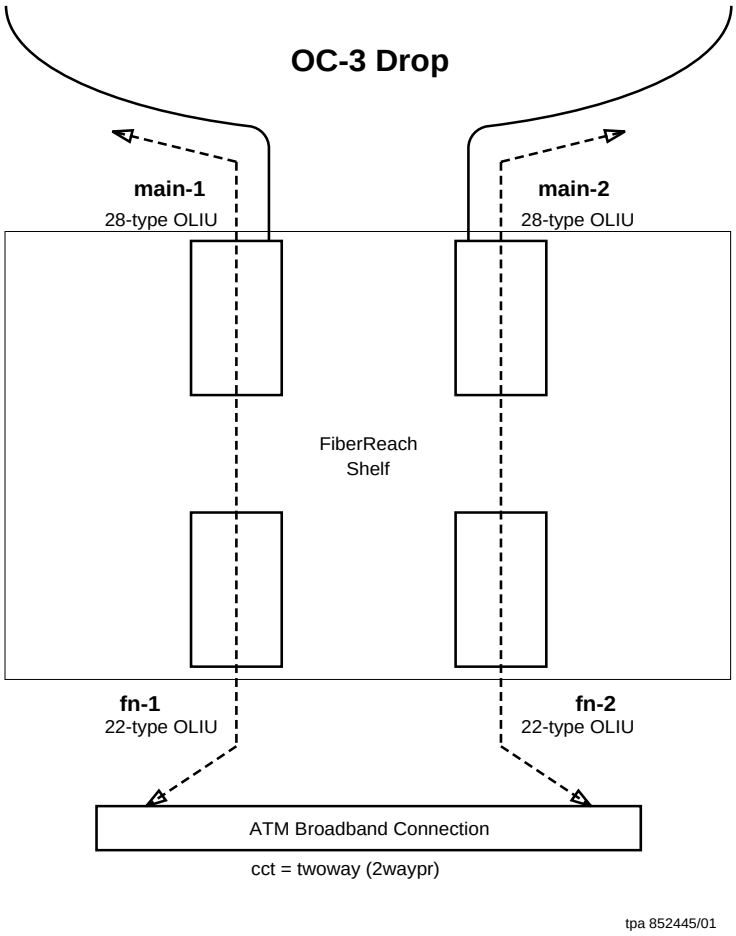

Figure 2-36. STS-3c Dual 0X1 Application (Release 3.1 or Later)

Basic Narrowband Shelf Configurations

The *SLC*-2000 system can host a DDM-2000 FiberReach Narrowband shelf (NBS) optical network unit (ONU) through an OC-1 ring using DDM-2000 FiberReach Wideband shelves (WBSs). Figure 2-37 and Figure 2-38 show the following typical applications:

- **WBS Collocated with the SLC-2000 system (Figure 2-37):** In this configuration, the collocated WBS is part of an OC-1 ring. This configuration requires a DDM-2000 OC-3 shelf or a *SLC*-2000 ARM shelf to be part of the ring and host the WBSs.
- **SLC-2000 J1C265AA-1, L4 ARM Shelf with 26G2-U OLIUs (Figure 2-38):** In this configuration, the J1C265AA-1, L4 ARM shelf contains 26G2-U OLIUs in Function Group C as part of the OC-1 ring. The SLC-2000 system must contain SONET Subsystem Software Release R13 or later and the WBSs in the ring must contain FiberReach Software R3.0 or later. This configuration eliminates the need for a collocated WBS and a DDM-2000 OC-3 shelf to host the WBSs in the OC-1 ring. In this configuration, the 28 DS1 pipes are not accessible from the DS1 low-speed slots in Function Group C of the ARM shelf. However, as shown in Figure 2-39, DS1 pipes are accessible from any of the WBSs on the ring if the bandwidth to support them is available on the OC-1 ring.

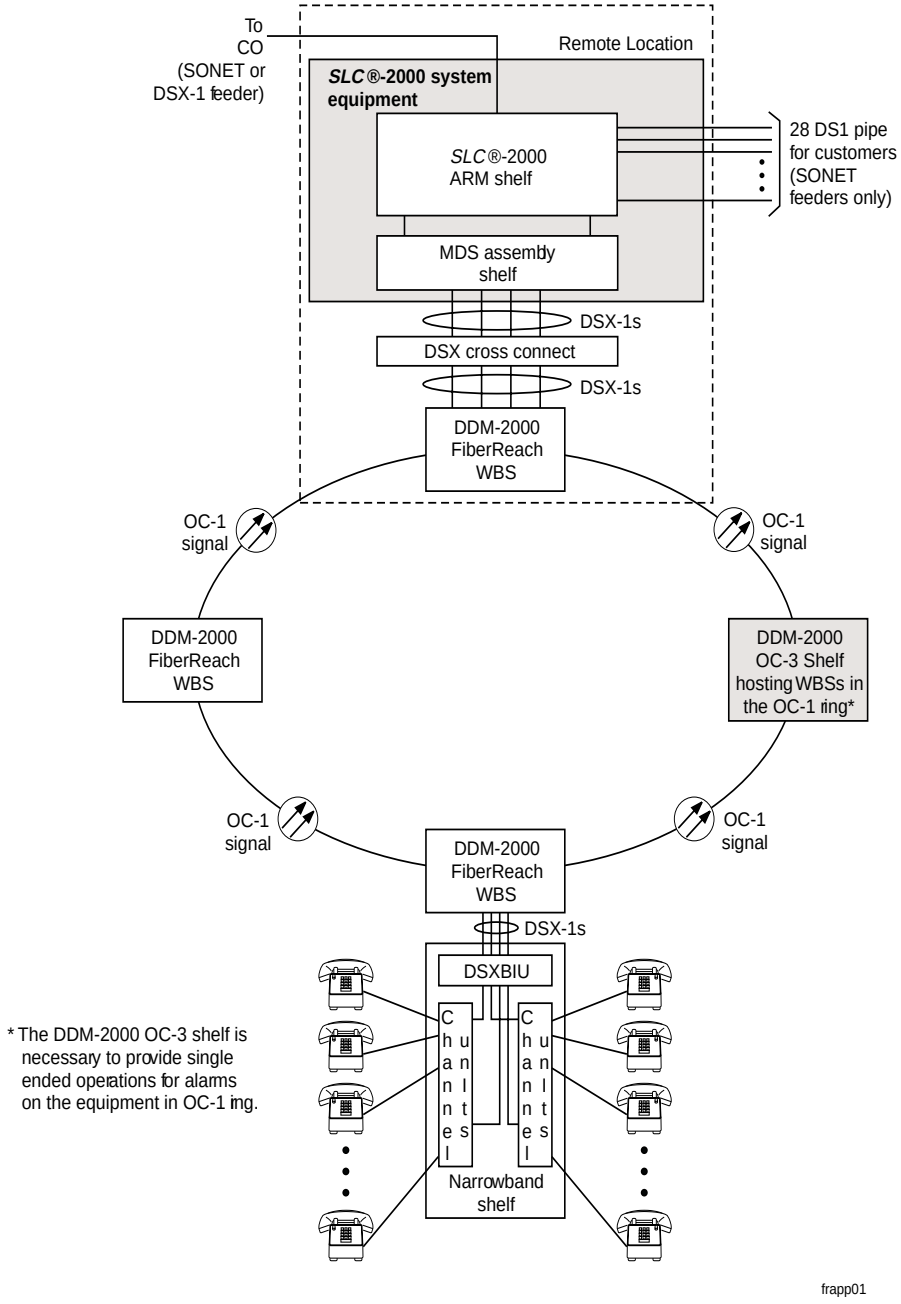

Figure 2-37. SLC-2000 System Hosting a FiberReach NBS Through a Collocated WBS

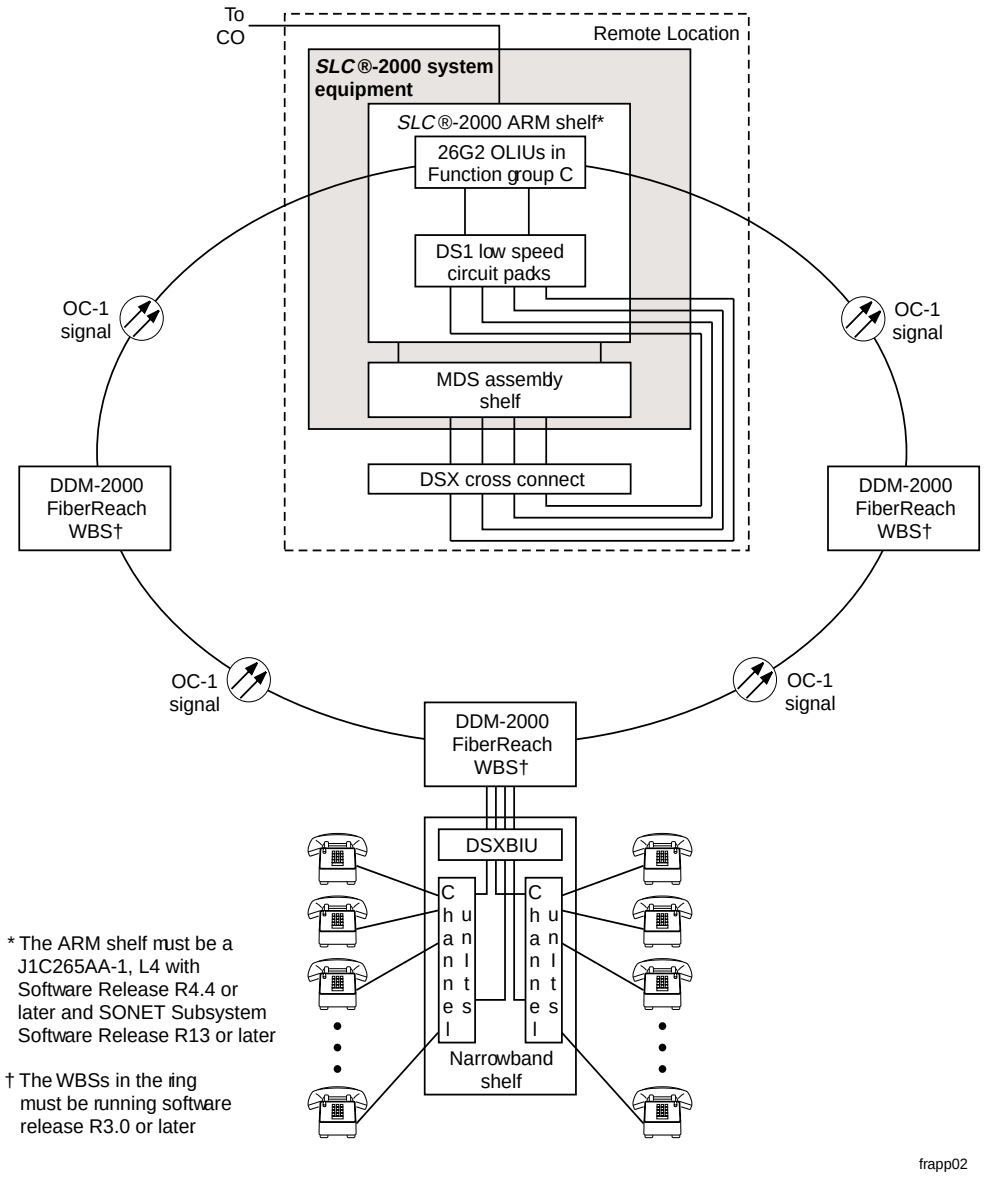

Figure 2-38. *SLC*-2000 System Hosting a FiberReach NBS using 26G2-U OLIUs and a J1C265AA-1, L4 ARM Shelf

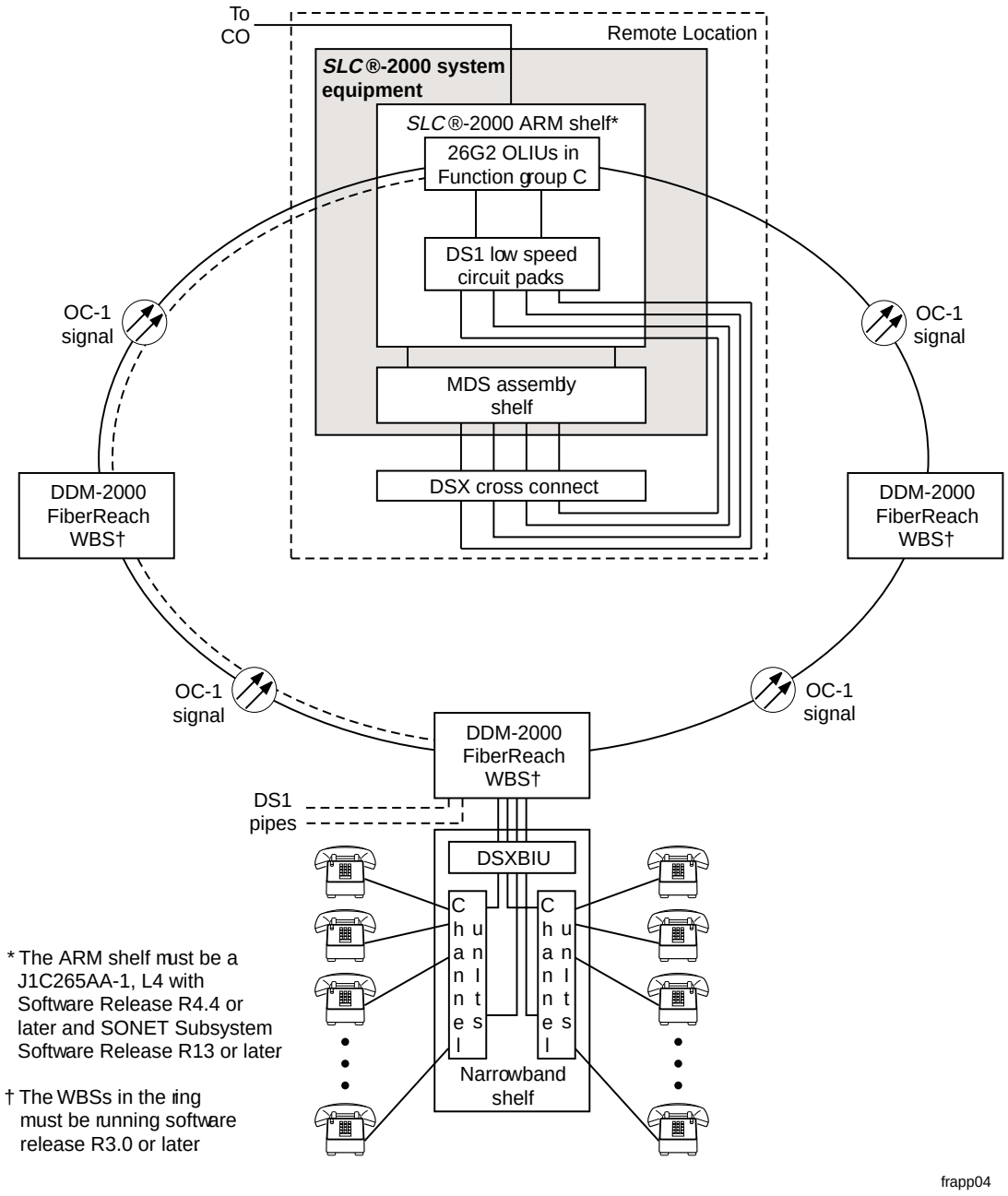

Figure 2-39. *SLC*-2000 System Hosting a FiberReach NBS using 26G2-U OLIUs and a J1C265AA-1, L4 ARM Shelf Provisioning DS1 Pipes Through a WBS

As stated earlier, the WBSs on the OC-1 ring must be hosted by either a DDM-2000 OC-3 shelf or the ARM shelf of a *SLC*-2000 system. Figure 2-40 shows the configuration of a collocated WBS hosted by a *SLC*-2000 ARM shelf. This configuration eliminates the need for a separate DDM-2000 OC-3 shelf. However, the 28 DS1 pipes are not accessible from the DS1 low-speed slots in Function Group C of the ARM shelf.

For detailed applications connecting the *SLC*-2000 Access System to the DDM-2000 FiberReach NBS ONU, see 363-206-300, *DDM-2000 FiberReach Applications, Planning, and Ordering Guide.*

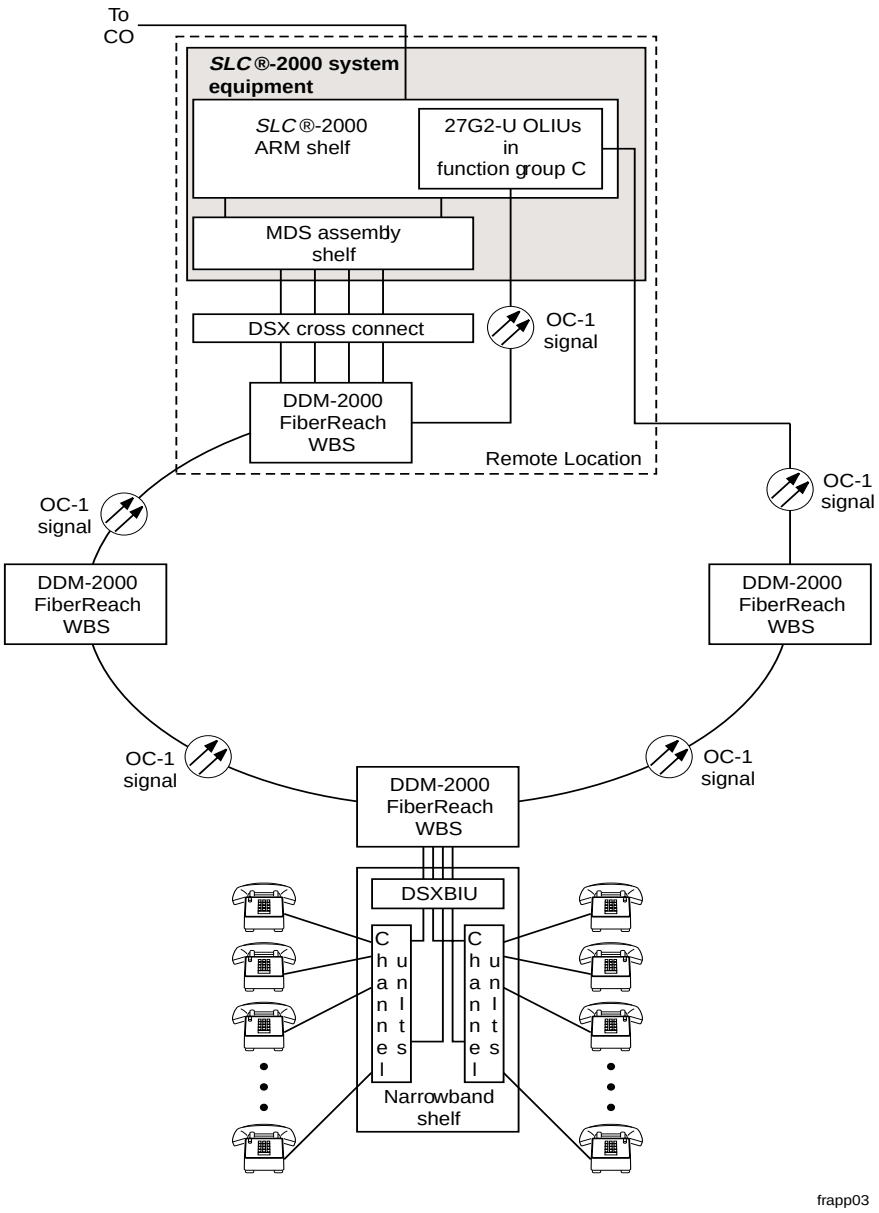

Figure 2-40. *SLC*-2000 ARM Shelf Hosting DDM-2000 FiberReach WBSs

Integrated DS1, T1, and DS0 Services

Integrated Narrowband Business Carrier Access

Figure 2-41 shows a business narrowband application using the DDM-2000 FiberReach Multiplexer on an OC-1 path-switched ring. This application provides protected POTS, ISDN, and special services, as well as DS1 services on a protected OC-1 fiber. This ring host is an OC-3/OC-12 path-switched ring via a *SLC*-2000 ARM or a DDM-2000 Multiplexer. The FiberReach product in this application contains both the wideband and narrowband shelves. The narrowband shelf has the capacity to provide telephony services such as POTS and POTS-like special services or basic rate ISDN service, while the wideband shelf provides DS1 rate services. The narrowband shelf contains 12 slots for service cards that provide up to 48 lines of POTS service.

At the wire center, the DS0 services are groomed by the *SLC*-2000 remote terminal and sent either to the *5ESS*® switch for locally switched traffic or to the DACS II Cross-Connect System for non-locally switched traffic. The DS1 traffic goes directly to a DACS-IV 2000 Cross-Connect System.

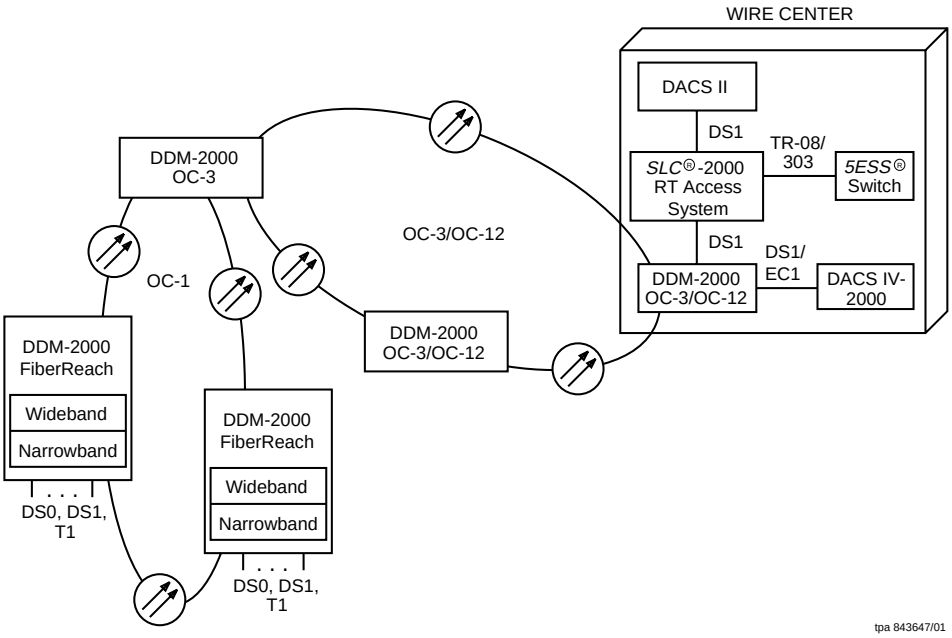

Figure 2-41. DDM-2000 FiberReach Multiplexer Business Narrowband Application

Figure 2-42 shows a configuration similar to Figure 2-41; however the *SLC*-2000 RT host is at a remote site, not in the wire center. TR08/TR303 grooming is done by the *SLC*-2000 at the remote location.

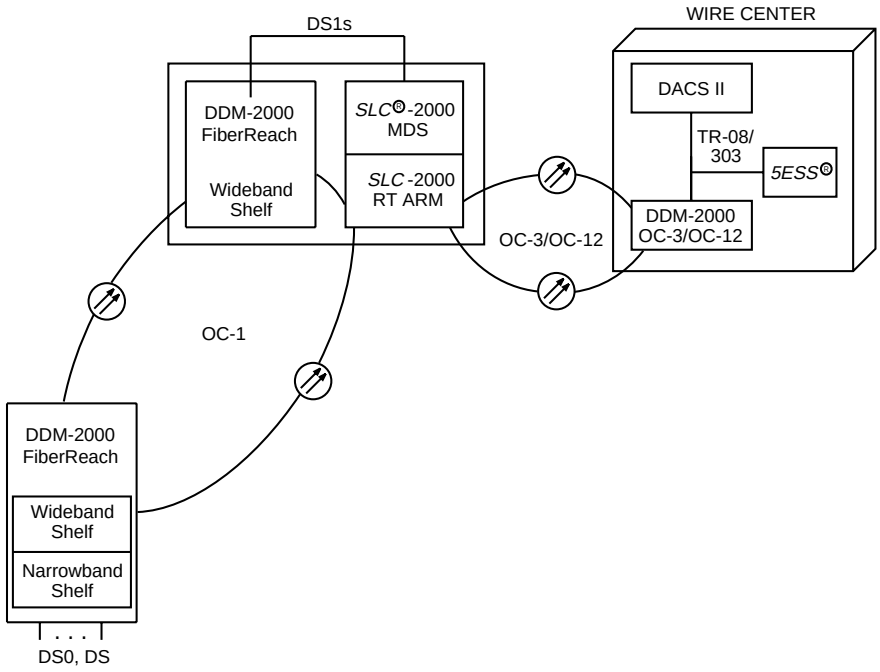

Figure 2-42. DDM-2000 FiberReach Multiplexer Business Narrowband Application with a Remote SLC-2000

Figure 2-43 shows a dual-homed integrated application. Figure 2-44 shows three types of stand-alone applications.

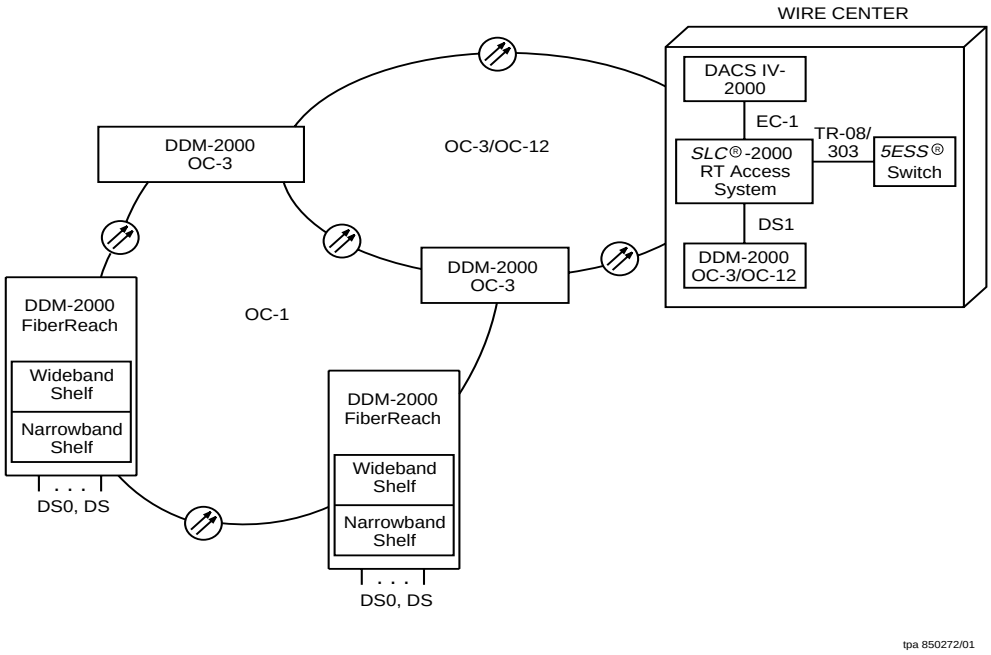

Figure 2-43. DDM-2000 FiberReach Multiplexer Dual-Homed Integrated Application

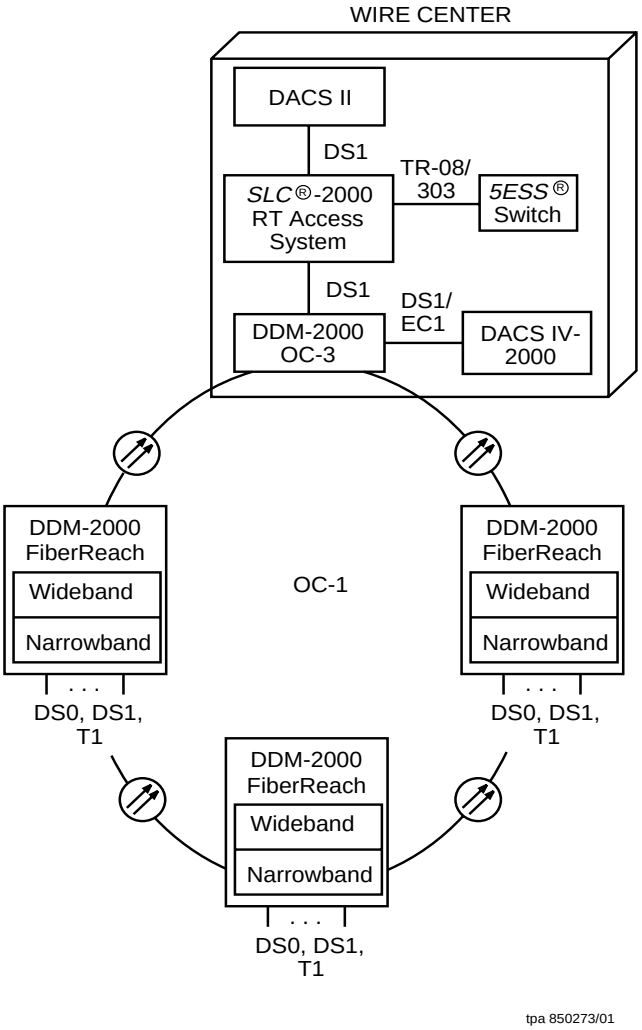

Figure 2-44. DDM-2000 FiberReach Multiplexer Stand-Alone Integrated Application

Another integrated narrowband business carrier access application option for the DDM-2000 FiberReach narrowband shelf is to collocate it with the DDM-2000 OC-3/OC-12 shelf. Since the narrowband shelf's high-speed interface is a DS1, a DDM-2000 OC-3/OC-12 multiplexer can serve as the ring vehicle for carrying the DS0 traffic. This application is shown in Figure 2-45.

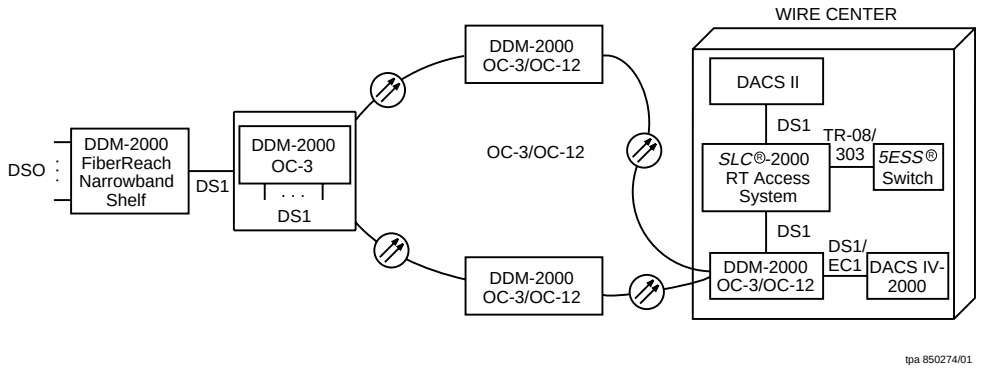

Figure 2-45. DDM-2000 FiberReach Multiplexer Low-Speed Traffic Application

Integrated DS1 Transport Configuration with *SLC LineReach* Access System

The *SLC LineReach* Access System supports DSX-1 electrical interface options by using the AUA61E LIU. The DSX-1 LIU meets all requirements in the digital cross-connect specification. The LIU has equalizer switches that provide equalization to the DSX cross-connect. The maximum separation between the *SLC LineReach* system and DSX cross-connect is 655 feet of 22 gauge cable (see 915-710-115, *Series 5 Applications Engineering*).

SONET Transport

An OC-1 optical ring can serve as a DS1 transport between the switch, INA, or COT interface and the *SLC LineReach* system. An example of this type of transport uses the DDM-2000 FiberReach Multiplexer wideband shelves. The wideband shelves must be hosted by either a DDM-2000 Multiplexer OC-3 shelf or the SONET subsystem of a *SLC*-2000 Access System to provide single-end operation of the SONET system (allows for an interface to provide OAM&P functions).

In this application, an optical multiplexer (either a DDM-2000 OC-3 shelf or a wideband shelf) accepts DS1 feeders from an integrated LDS or a COT and multiplexes them onto an OC-1 ring. If using a *SLC*-2000 COT, the COT can multiplex the analog lines directly onto an OC-1 ring. At the *SLC LineReach* remote terminal location, the wideband shelf demultiplexes the DS1 feeders from the OC-1 ring and sends them to the *SLC LineReach* system. For this application, the *SLC LineReach* system must contain AUA61E LIUs.

A single OC-1 ring can support up to 14 Mode 1 (48 lines, 2 DS1s), 28 Mode 1 (24 lines, 1 DS1), or 28 Mode 2 (48 lines, 1DS1) *SLC LineReach* systems. If you need to support more *SLC LineReach* systems, you can upgrade the OC-1 ring to an OC-3 ring by changing hardware and, if necessary, software in the SONET equipment. A single OC-3 ring can support up to 42 Mode1 or 84 Mode 2 *SLC LineReach* systems.

Figure 2-46 shows an integrated application using a SONET OC-1 ring. In this example, a DDM-2000 Multiplexer OC-3 shelf is collocated with the LDS. The OC-3 shelf not only multiplexes the DS1 signals (from the DS1 feeders) onto an OC-1 ring, but also hosts the wideband shelves in the ring.

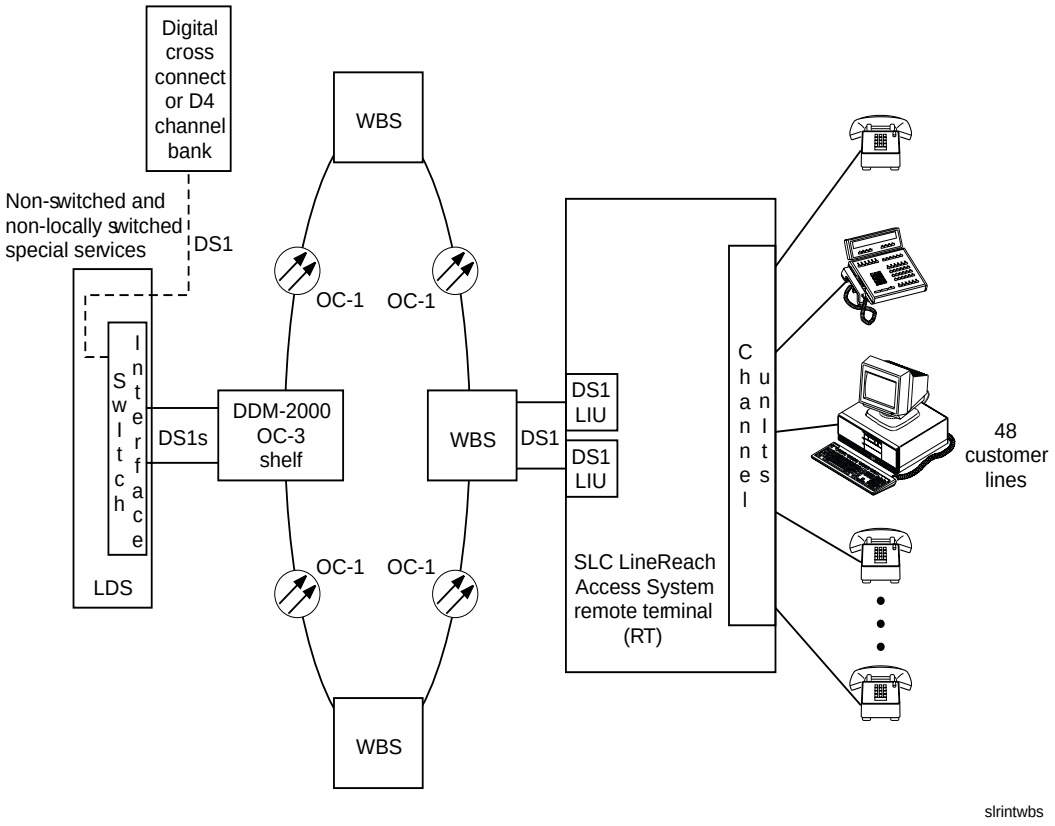

Figure 2-46. DSX-1 Electrical Interface — SONET Transport (Integrated Configuration)

Intelligent Vehicle Highway System (IVHS)

The IVHS is beginning and will grow to play a major role in the roadway systems of the future. The primary use in the near-term is to reduce congestion. This is done in several ways:

- The IVHS provides more efficient and optimal traffic management, which attempts to avoid congestion in the first place.
- The IVHS provides better management of congestion caused by random occurrences, such as accidents or breakdowns.
- The IVHS eliminates many of the foreseeable causes of congestion, such as toll-taking, by automating these functions.

In the future, the IVHS system will also help travelers plan their routes by providing up-to-the-minute traffic and highway information. The DDM-2000 FiberReach, OC-3, and OC-12 Multiplexers are a perfect match for the networking needs of these systems.

Figure 2-47 shows a typical IVHS application. An IVHS network carries data between roadside equipment, such as traffic counters, speed sensors, variable messaging signs, video cameras, toll-gathering equipment, pay phones and call boxes, and a traffic operations center, where incoming data is processed and responses are generated. The DDM-2000 FiberReach, OC-3, and OC-12 Multiplexers provide a perfect backbone for carrying this information. The DDM-2000 SONET ring capability, when coupled with diverse fiber routing on opposite sides of the roadway, makes the backbone completely self-healing in the face of failures. Such reliability is absolutely essential, especially as travelers come to depend more and more on IVHS networks.

DDM-2000 FiberReach supplies a single system solution for the small access cabinets, each of which requires a few voice-frequency (VF) and DS0 data channels, as well as DS1-based services. The bandwidth management capabilities of the DDM-2000 FiberReach, OC-3, and OC-12 Multiplexers allow flexible allocation of bandwidth to match the dynamics of a roadway system which is undergoing unpredictable changes in traffic patterns, breakdowns, accidents, and repairs. Such bandwidth management provides a system which meets the IVHS network needs in a cost-effective manner.

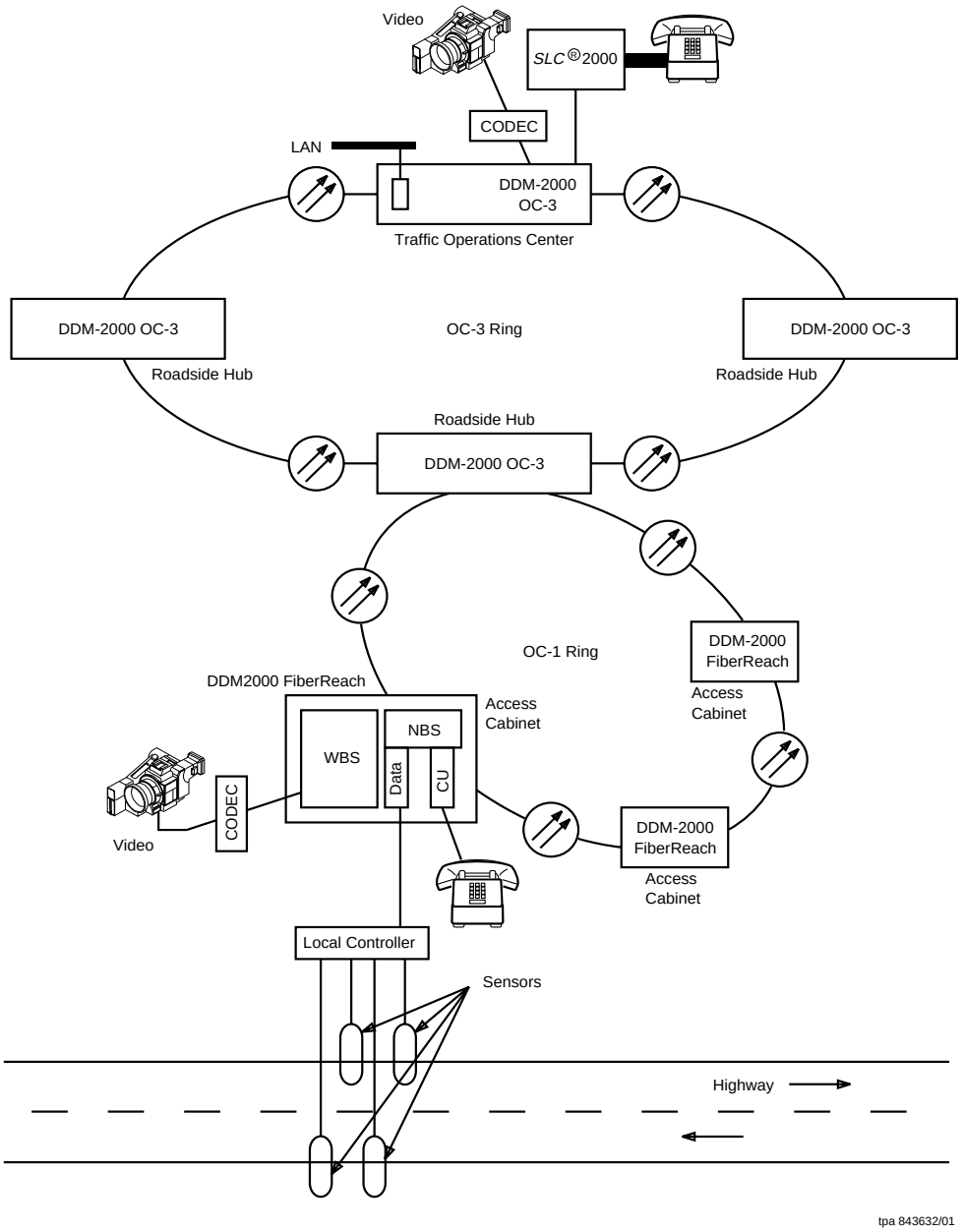

Figure 2-47. Intelligent Vehicle Highway System (IVHS) Application

Teleprotection and Supervisory Control and Data Acquisition (SCADA) Communications for Electric Utilities

Electric utilities are facing an unprecedented demand for increased communications bandwidth to support modern operations and business applications such as substation automation, computer networking, and video teleconferencing. Many electric utilities are installing SONET fiber optic backbones to meet these needs. SONET fiber optic backbones are a valuable communications resource that can also be used for real time protective relay and SCADA applications.

DDM-2000 OC-3, OC-12, and FiberReach systems can be used in a flexible backbone network among electrical substations and other important sites. These systems provide an innovative locked cross-connection feature that enhances the ability of SONET rings to transport protective relay and SCADA communications. The locked cross-connection feature meets the teleprotection requirements for minimum and stable transmission delay, minimum system outage during a protection switch, and DS0 level bandwidth management at all ring nodes.

The locked cross-connection feature allows a DS1 to be removed from the TR-496 compliant virtual tributary (VT) path protection switching algorithm and is provisioned as an unswitched path between any two nodes on the ring. Figure 2-48 shows that locked DS1s can be used to interconnect adjacent nodes all the way around SONET rings, thereby permitting access to the DS1 at each SONET node.

Figure 2-48 shows a single DS1 locked between ring nodes, but this can be extended to an arbitrary number of DS1s within the available SONET bandwidth. This locked cross-connection feature fixes the ring rotation (and delay) of the DS1 paths on the ring and also permits DS0 grooming of the DS1s at each DDM-2000 or FiberReach node using an external drop/insert multiplexer, such as the RFL 9001 Intelligent Multiplexer. Figure 2-48 also shows the DDM-2000 interconnecting at the DS1 level with an adjacent RFL 9001 Intelligent Multiplexer, which in turn connects on the low-speed side to protective relay and SCADA equipment. Specially designed channel units in the RFL 9001 Intelligent Multiplexer detect when a fault occurs on the power line or substation and communicates at the DS0 level with other substation nodes to isolate the power grid fault.

In addition to the efficient DS0 grooming capability, the RFL 9001 Intelligent Multiplexer implements its own protection algorithm that can restore the DS0 level circuits within the locked cross-connection should the ring be cut. This algorithm operates much faster than the SONET TR-496 algorithm, thereby minimizing system outage during a protection switch.

Figure 2-48 also shows an optical drop/insert DS1 extension from the SONET rings implemented with RFL 9001 Intelligent Multiplexers. This extension is useful for serving low bandwidth sites remote from the SONET backbone. The figure shows a single host DDM-2000 interconnecting the rings, but a dual ring interworking (DRI) could be used to provide node survivability.

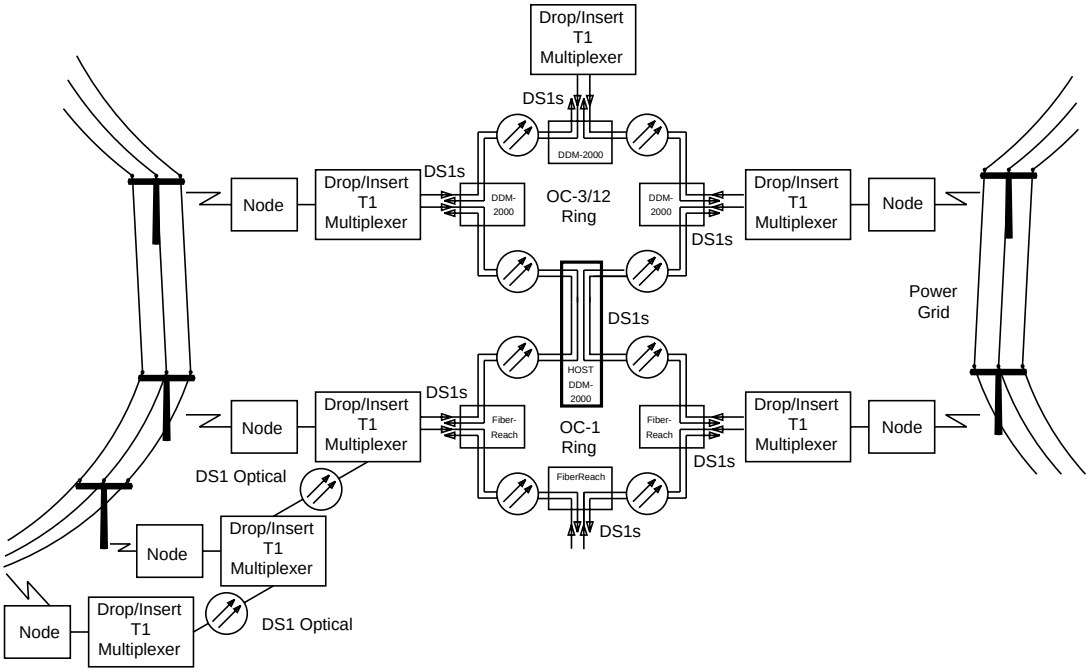

Note: Teleprotection and Supervisory Control
and Data Acquisition (SCADA)

Figure 2-48. DDM-2000 FiberReach Teleprotection and SCADA Communications

Shelf Descriptions and Configurations

3

Contents

Overview 3-1

DDM-2000 FiberReach Wideband Shelf 3-1

- DDM-2000 FiberReach Multiplexer Carrier Assembly 3-9
- DDM-2000 FiberReach Wall-Mount Distant Terminal 3-10
- Wideband Shelf Plug-Ins 3-14
- Lightning and Surge Secondary Protection Assembly for T1 Extensions and HDSL 3-15

Shelf Configuration 3-16

- DS1 Services Only 3-17
- T1 Extensions Only 3-19
- T1 Extensions and DS1 Service 3-22
- HDSL Services 3-25
- DS3 and DS1 Services 3-26
- DS3 Interface (BBG4/BBG4B) 3-26

Data Services Interface 3-28

- STS-3c 0 X1 Application 3-30

DDM-2000 FiberReach Narrowband Shelf 3-31

Secured-Area Telecommunication Applications Cabinet (STAC) System 3-37

- Construction 3-38
- Reliability 3-38

Contents

Shelf Descriptions and Configurations

3

Overview

This chapter provides the physical description of the DDM-2000 FiberReach Multiplexer shelf and equipage for the Wideband and Narrowband shelves.

DDM-2000 FiberReach Wideband Shelf

The DDM-2000 FiberReach Multiplexer wideband shelf is shown in Figure 3-1 through Figure 3-9. Figure 3-1 through Figure 3-7 show various shelf configurations. The shelf measures approximately 9.65 inches high by 9.17 inches wide by 13.11 inches deep. Each wideband shelf is a stand-alone entity with its own fiber cabling and interfaces to the DSX-1, office power, and operations interfaces. The default configuration provides rear access cabling. Front access is also an option. Front-access optical connectors interconnect to optical fiber facilities and facilitate shelf loopback. The optical connectors are mounted on the optical line interface unit (OLIU) circuit pack faceplate. A DDM-2000 FiberReach Multiplexer wideband shelf consists of the following:

- Fourteen circuit pack slots
  - Eight 4-inch slots
  - Six 8-inch slots, including a user panel
- Fully connectorized backplane
- Front cover

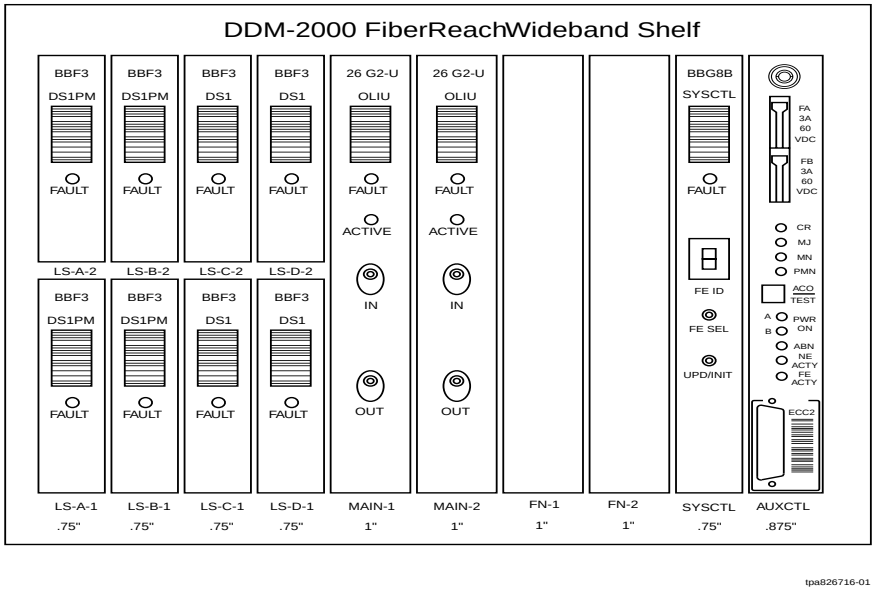

Figure 3-1. DDM-2000 FiberReach Multiplexer Wideband Shelf — Front View

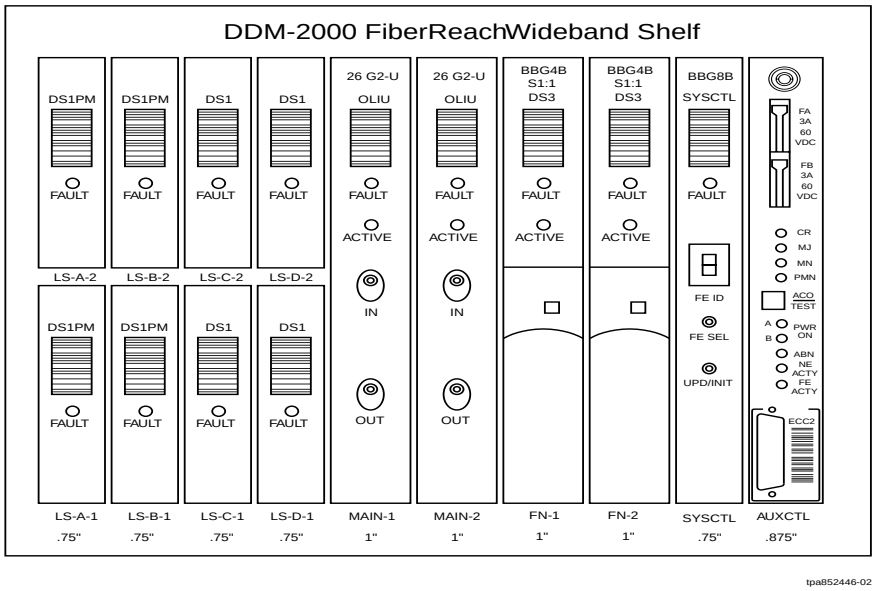

Figure 3-2. OC-1 Optics with BBG4B

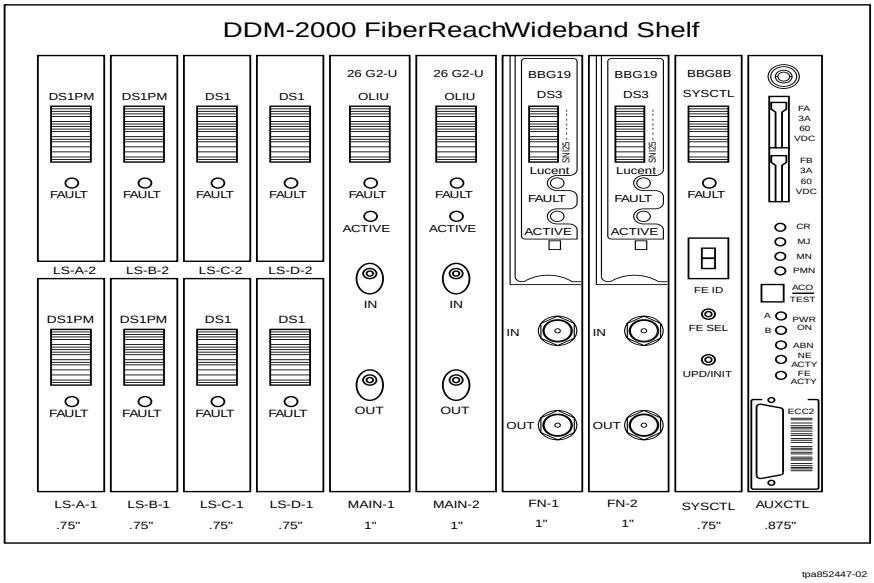

Figure 3-3. OC-1 Optics with BBG19

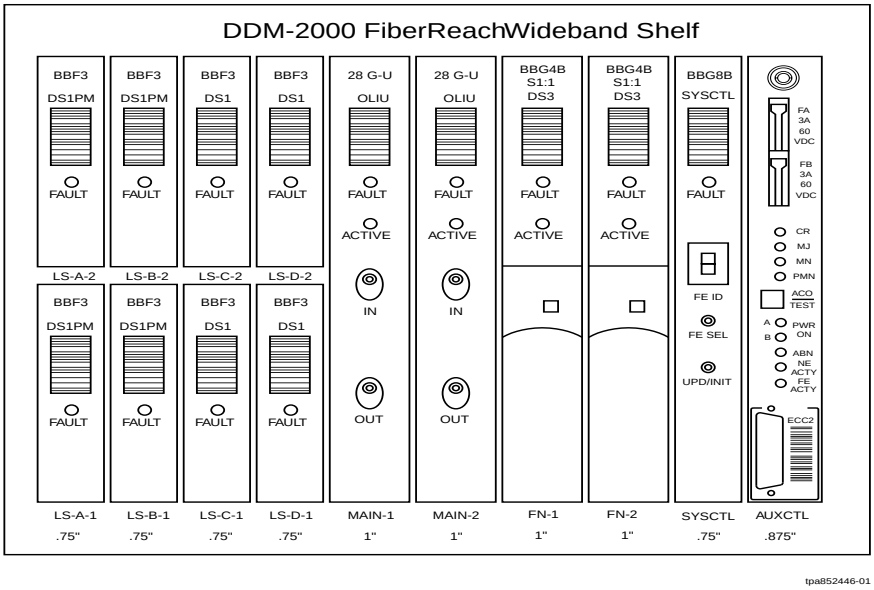

Figure 3-4. DDM-2000 FiberReach Multiplexer Wideband Shelf — with BBG4B

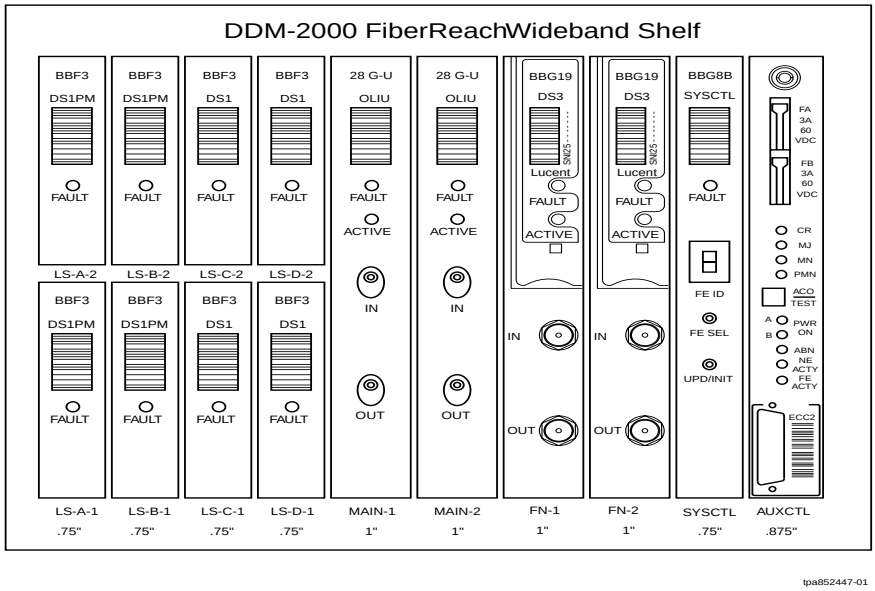

Figure 3-5. DDM-2000 FiberReach Multiplexer Wideband Shelf — with BBG19

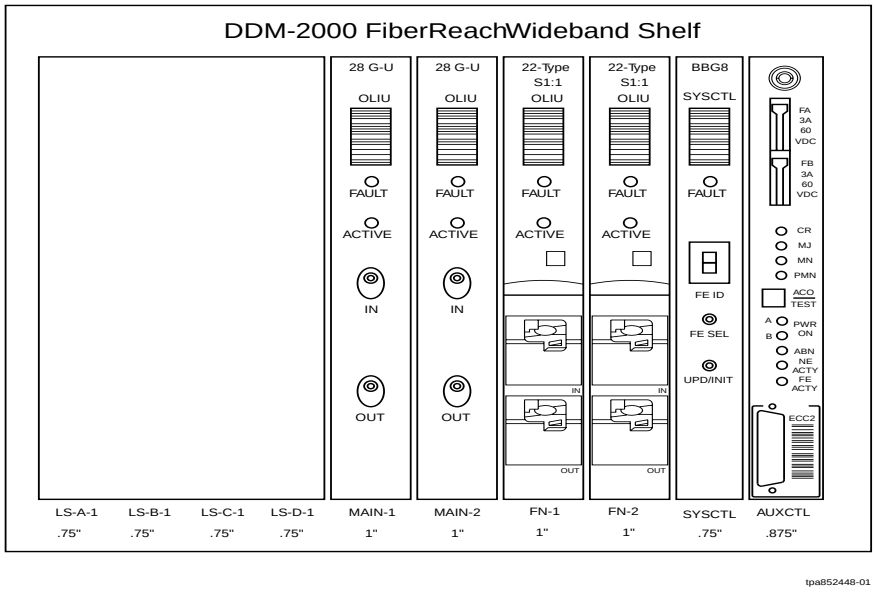

Figure 3-6. DDM-2000 FiberReach Multiplexer Wideband Shelf —with 22-Type

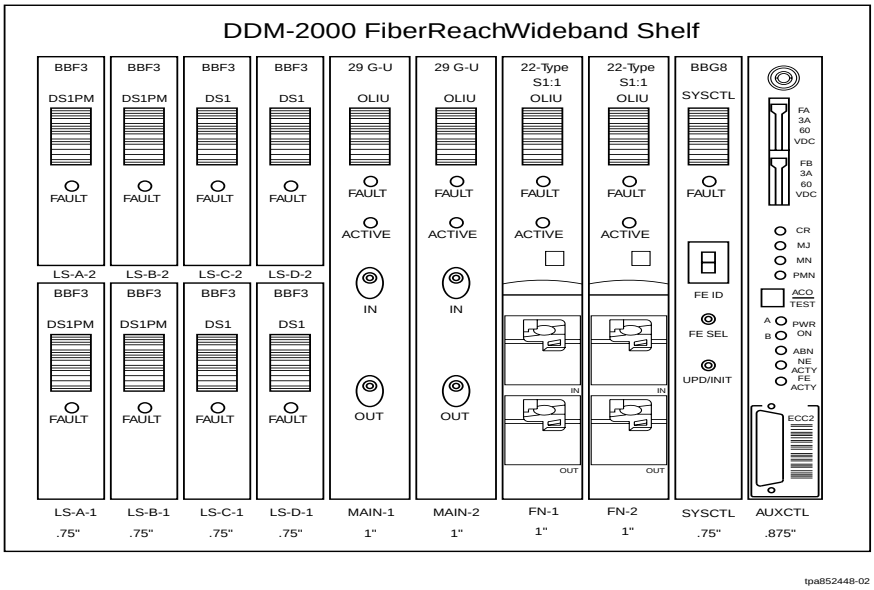

Figure 3-7. DDM-2000 FiberReach Multiplexer Wideband Shelf — with OC-12 Optics

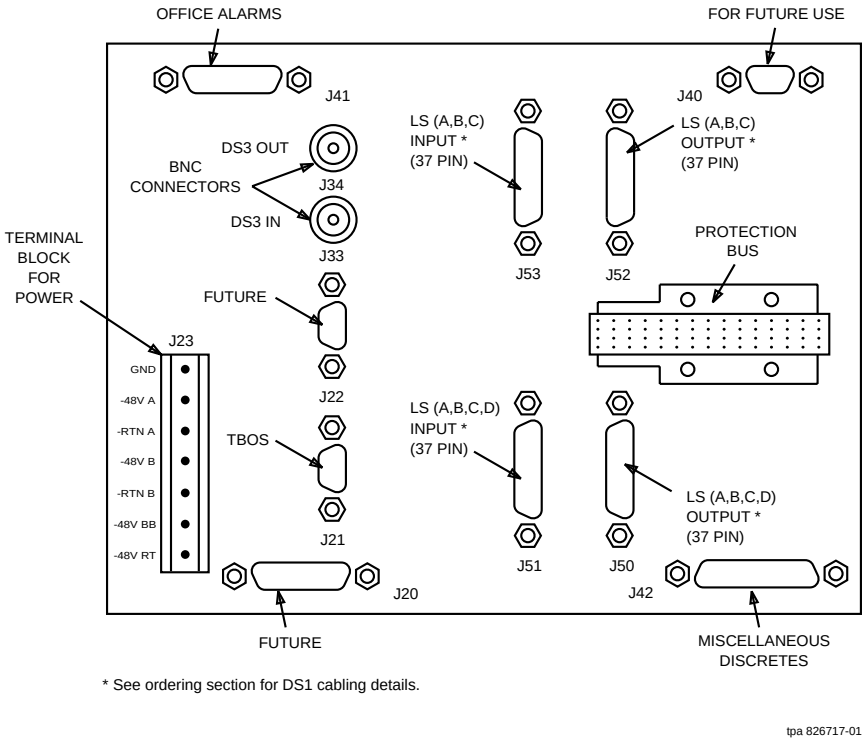

Figure 3-8. DDM-2000 FiberReach Multiplexer Wideband Shelf — Rear View

As shown in Figure 3-1, starting at the far left, eight 4-inch slots are reserved for service and protection low-speed interfaces. The DS1, DS1 PM, T1EXT, and low speed interface circuit packs can be configured as 1x1, 1x7, and unprotected. HDSL circuit packs can be configured as 1X2 or unprotected. Each circuit pack is equipped with a fault Light Emitting Diode (LED) indicator.

The next two 8-inch slots are reserved for service and protection main OC-1, OC-3, or OC-12 OLIU circuit packs. Each OLIU is equipped with both a fault and active LED indicator. The OLIUs are located in the slots labeled Main-1 and Main-2.

The next two 8-inch slots are for the Function Unit. The Function Unit became active with FiberReach Release 3.1 using the 28-type OLIUs. With FiberReach Release 4.0, the Function Unit slots will be active with any valid optics in the Main. The Function Unit slots can be equipped as 0x1 or 1x1 protected. These slots are reserved for broadband services such as OC-3, or for DS3 Services.

The next section of the shelf consists of two 8-inch slot reserved for control circuit packs. The system controller (SYSCTL) slot is reserved for the SYSCTL circuit

pack. The auxiliary controller (AUXCTL) slot is reserved for the user panel (USPNL) circuit packs.

The user panel (USPNL) is located at the far right side of the wideband shelf and is equipped with the following:

- Two –48 volt fuses (labeled FA and FB)
- Four alarm LEDs
- ACO/TEST pushbutton control
- Five status LEDs
- Craft interface terminal (CIT) port.

NOTE:
Damage that may occur to the shelf due to accidental insertion of same-size circuit packs in incorrect slots is prevented through circuit pack keying. Three keying combinations are provided. The key mechanism is located on the faceplate latch with an interference mechanism on the shelf.

The front of the wideband shelf is covered with an electromagnetic compatibility (EMC) cover, as shown in Figure 3-9. If the shelf needs to be accessed for maintenance activities, the cover is hinged to drop down 180 degrees. The cover can also be removed by tapping the door in when it is open and held horizontally outward, until the hinge pops out of the hinge plate. The hinge pin can then be lifted up and the door removed.

The back of the wideband shelf is covered by an cover over the circuit pack slots on the backplane and a cover over the protection bus. All covers are necessary to meet the EMC guidelines set by the Federal Communications Commission (FCC).

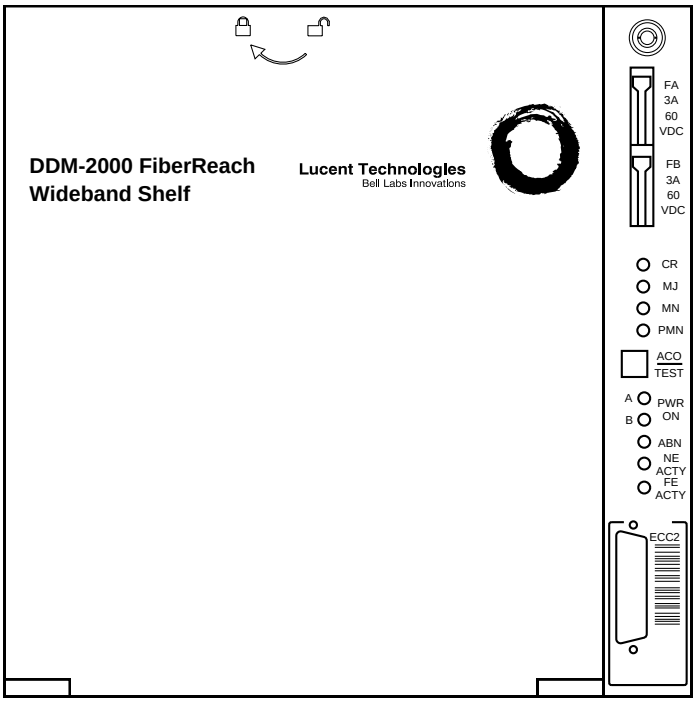

Figure 3-9. DDM-2000 FiberReach Multiplexer Wideband Shelf Front Panel

DDM-2000 FiberReach Multiplexer Carrier Assembly

For rack-mounted applications, the DDM-2000 FiberReach Multiplexer is available in a carrier assembly, as shown in Figure 3-10. This carrier assembly provides space for up to two wideband shelves, or one wideband and one narrowband shelf, or two narrowband shelves. Two electrostatic discharge (ESD) jacks are mounted on the carrier frame.

Table 3-11 shows FiberReach carrier assembly group configurations.

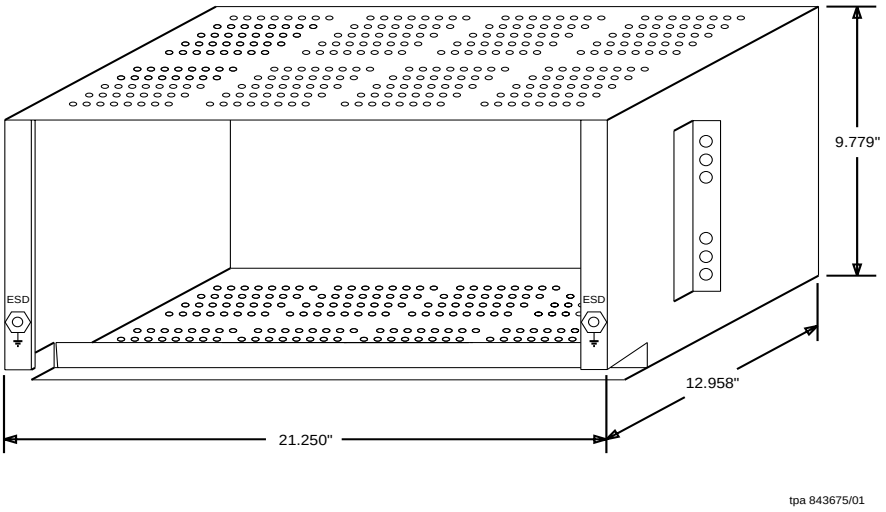

Figure 3-10. DDM-2000 FiberReach Multiplexer Carrier Assembly

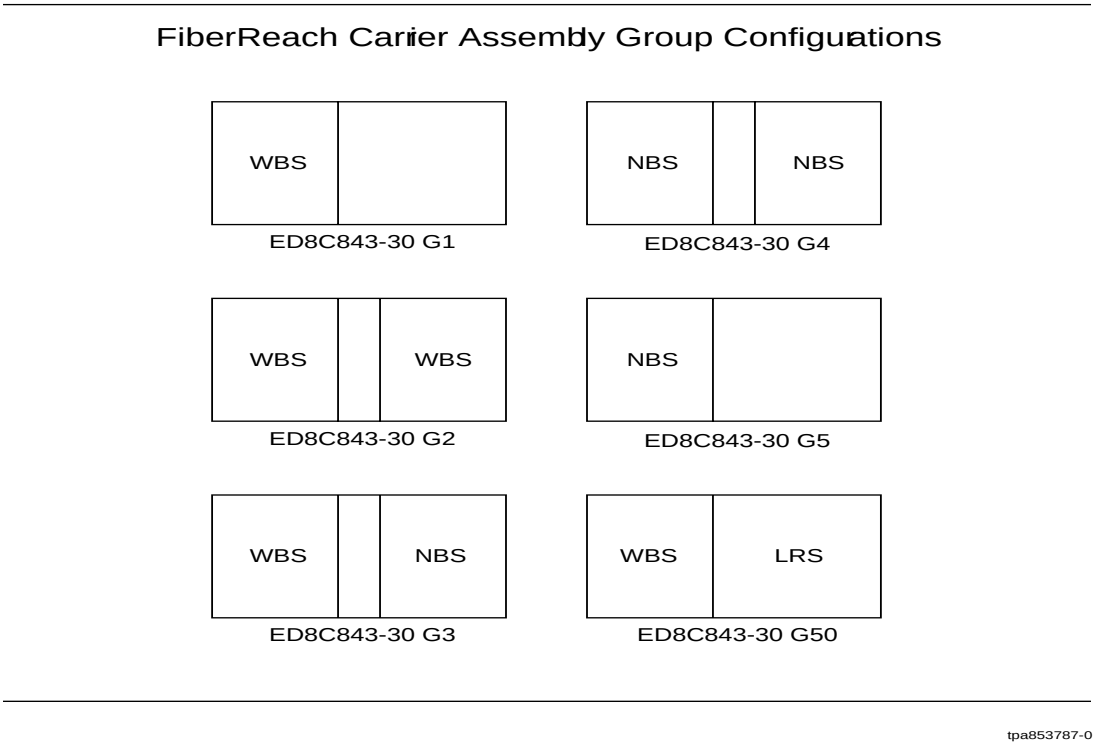

Figure 3-11. DDM-2000 FiberReach Multiplexer Carrier Assembly Group Configurations

DDM-2000 FiberReach Wall-Mount Distant Terminal

The DDM-2000 FiberReach Multiplexer is available in a wall-mount enclosure. This enclosure is approximately 23 inches wide by 11 inches high and will accommodate the following:

- A single DDM-2000 FiberReach wideband shelf
- A wideband and a narrowband shelf
- Two narrowband shelves
- A *SLC LineReach* Access System shelf
- A wideband shelf and a *SLC LineReach* Access System shelf.

Figure 3-12 shows some of the different configurations available for this enclosure. Each DSX panel supports up to 16 DS1 circuit packs, so two DSX panels are needed for 1x7 protection. The *LGX*® panel is for lightguide cross-connections.

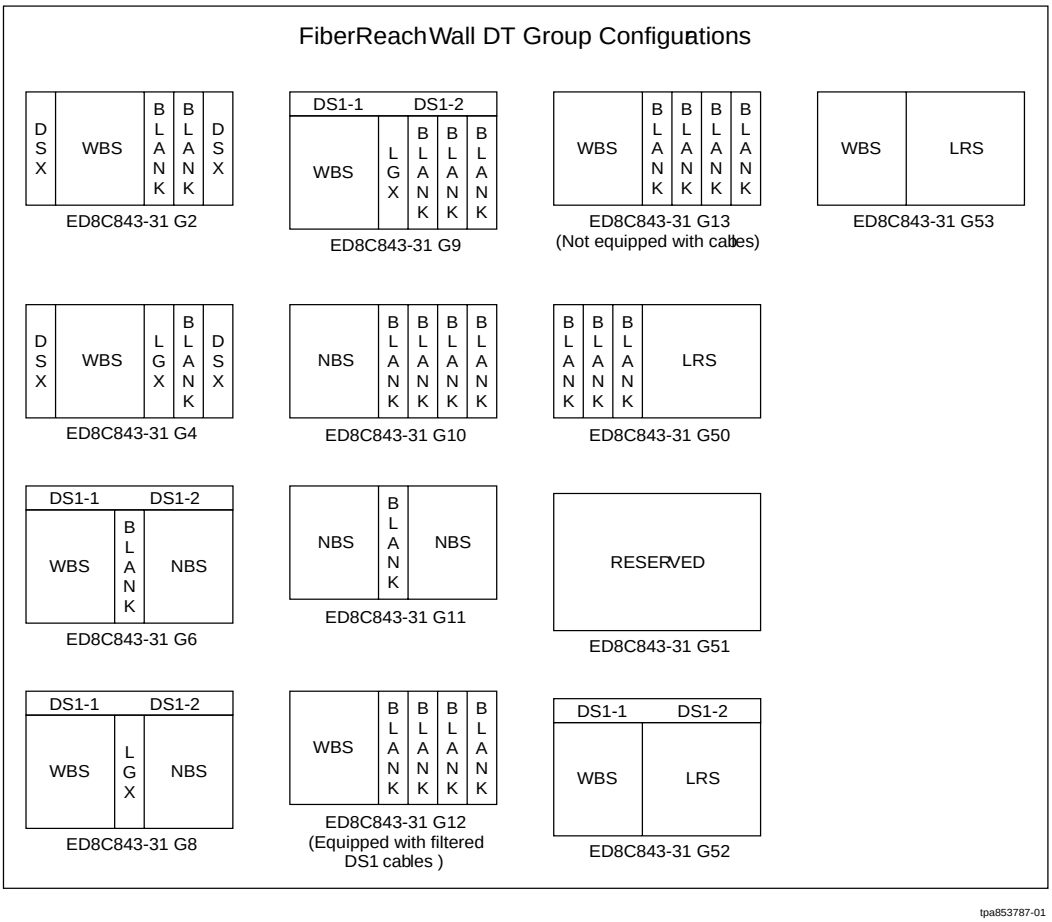

Figure 3-12. DDM-2000 FiberReach Wall Mount Enclosure Options

Figure 3-13 shows a Wall Distant Terminal equipped with one wideband and one narrowband shelf, two DSX panels, and an *LGX* panel. The enclosure is approximately 23 inches wide by 11 inches high by 13.4 inches deep.

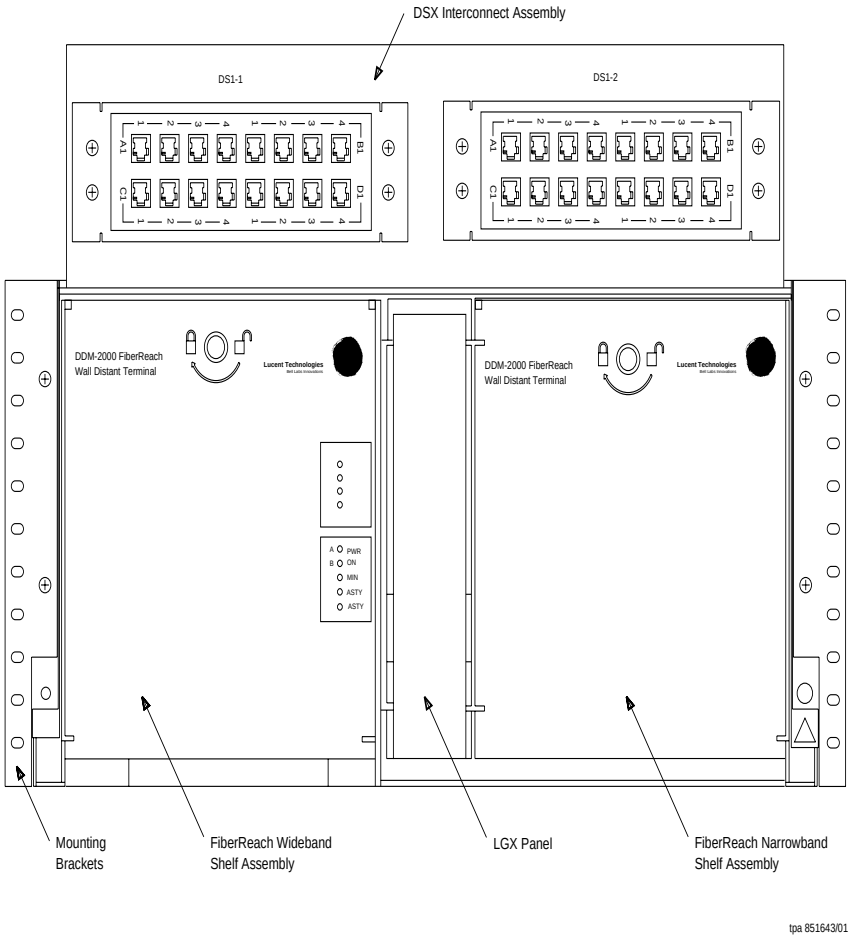

Figure 3-13. DDM-2000 FiberReach Wall Mount Distant Terminal

The Wall Mount Distant Terminal can also accommodate a single *LineReach* shelf and one DDM-2000 FiberReach wideband shelf. The *SLC LineReach* Access System comes in three preassembled configurations for the Wall Mount DT:

- *SLC LineReach* Access System in Wall DT (no DSX cross-connect) (ED8C843-31 G50, Comcode 601923634)

- WBS and *SLC LineReach* Access System in Wall DT (with dual DSX cross-connect) (ED8C843-31, G53, Comcode 601925969)
- WBS and *SLC LineReach* Access System in Wall DT (no DSX cross-connect) (ED8C843-31, G53, Comcode 601925969)

Figure 3-14 shows the configuration for a Wall Mount DT containing a *SLC LineReach* Access System and DDM-2000 FiberReach wideband shelf. The Wall Mount DT also comes with a dual DSX cross-connect. Each DSX panel supports up to 16 DS1 circuit packs, so two DSX panels are needed to support 28 DS1s. One DSX panel (DS1-1) receives 16 DS1s from the WBS while the other DSX panel (DS1-2) receives 12 DS1s.

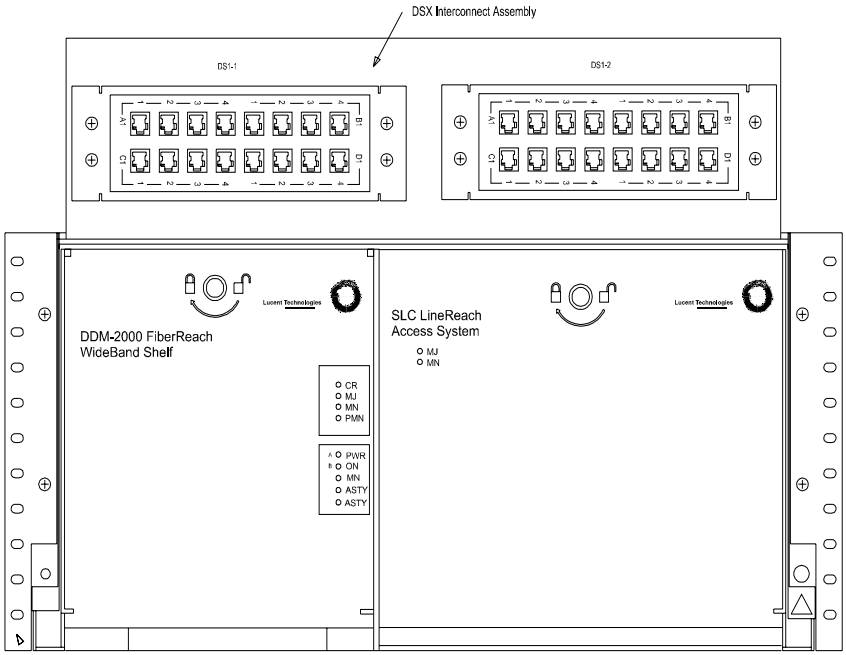

Figure 3-14. Wall Mount Distant Terminal with SLC LineReach Shelf and DDM-2000 FiberReach Wideband Shelf

Wideband Shelf Plug-Ins

Table 3-1 lists the DDM-2000 FiberReach Multiplexer wideband shelf plug-ins.

Table 3-1. DDM-2000 FiberReach Wideband Shelf Plug-Ins

Product Code	Functional Name	Functional Designation
BBF1B	DS1 Low-Speed Interface	DS1
BBF3/BBF3B	DS1 Performance Monitoring	DS1PM
BBF6	T1 Extensions	T1EXT
BBF8 (See Note)	HDSL Interface	HDSL
BBG4	DS3 low-speed interface	DS3
BBG4B	DS3 low-speed interface	DS3
BBG8/BBG8B	System Controller	SYSCTL
BBG19	DS3 Interface	DS3
22D-U	OC-3 IS-3 OLIU with TSI	OLIU
22F/22F-U/22F2-U	OC-3 OLIU with TSI	OLIU
22G-U/22G2-U/22G3-U/22G4-U	OC-3 OLIU with TSI	OLIU
26G2-U OLIU	OC-1 OLIU with TSI	OLIU
28G-U*	OC-3 OLIU with TSI	OLIU
28G2-U*	OC-3 OLIU with TSI	OLIU
29G-U*	OC-12 OLIU with TSI	OLIU
29H-U*	OC-12 OLIU with TSI	OLIU
177A	Retainer	
ECC2†	User Panel	USPNL

* Requires Interconnect Cable Assembly (847721271)

† The user panel is part of the wideband shelf assembly but may also be ordered separately.

NOTE:
28-type or 29-type is required. A maximum of 3 HDSL cards per shelf is allowed and cannot be mixed with other low-speed packs.

CAUTION:
In addition to primary lightning protection, an external Lighting and Surge Secondary Protection Assembly (ED-8C783-30 or equivalent) is required for circuit packs used in outside plant applications.

Lightning and Surge Secondary Protection Assembly for T1 Extensions and HDSL

T1EXT/HDSL Digital lines in the outside plant environments may be exposed to high voltages due to lightning surges and power crosses due to fallen power lines. In order to protect a DDM-2000 shelf with T1EXT/HDSL circuit packs from such occurrences, an external assembly that houses a secondary surge protection is required.

The lightning and surge protection assembly, shown in Figure 3-15, is approximately 17.5 inches wide, 3.45 inches high, and 5.65 inches deep and can be installed in 23-inch racks. It can be equipped with one or two small backplanes. Each backplane has seven edge connectors and can support up to seven T1 extension channels. The two backplanes together have enough capacity to support 14 T1 extension or 6 HDSL extension channels in a FiberReach shelf (the maximum capacity). A small circuit board with fuses, current limiting resistors, and thermal cutoff devices for both the tip and ring conductors is installed in the edge connector whenever the DDM-2000 FiberReach shelf is equipped with a T1EXT circuit pack. The small circuit board provides for secondary surge and power cross protection.

The lightning and surge protection assembly does not include any primary surge protectors. The tip and ring conductors must have gas tubes (Lucent protector unit 4B3EW or equivalent) installed at the point of entry into a cabinet or building.

The lightning and surge protection assembly meets the requirements specified in Section 4 of the Telcordia Technologies GR-1089-CORE, Issue 1, November 94, as well as *UL* 1459.

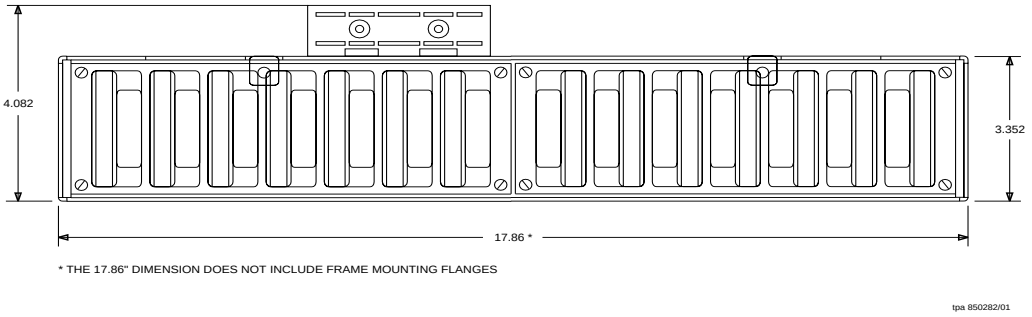

Figure 3-15. T1 Lightning and Surge Protection Assembly

Shelf Configuration

This section summarizes descriptive information used with applications information to plan procurement and deployment of the DDM-2000 FiberReach Multiplexers. There are several considerations that should be remembered when planning the DDM-2000 FiberReach Multiplexers' role in the network. Projected customer requirements will determine the initial capacity needed, as well as evolution to higher capacities. The advanced networking capabilities of the DDM-2000 FiberReach Multiplexers offer many economic and planning benefits, and certain guidelines should be followed to maximize these benefits. Physical installation considerations will be guided by the installation location (central office, uncontrolled, or customer locations). Initial network configuration will determine synchronization requirements. Synchronization should be planned on a network basis, considering items like topology, reliability, internetwork connectivity, and service evolution.

The DDM-2000 FiberReach Multiplexer provides multiplexing and transport for one STS-1 signal optic signal when equipped with OC-1 optics or for up to 3 STS-1s when equipped with OC-3 optics or multiplex 4 STS-1s and transport up to 12 STS-1s when equipped with OC-12 optics in the Main slots in a ring configuration. This capacity may be utilized in many combinations of low-speed inputs. The following shelf configurations represent some examples of the low-speed input combinations.

DS1 Services Only

Figure 3-16, Figure 3-17, and Figure 3-18 show examples of the DDM-2000 FiberReach in a wideband application providing DS1 services only. The wideband shelf is a complete DS1 to OC-1 or OC-3 or OC-12 solution. The wideband shelf uses the two main optical line interface unit (OLIU) slots to interface an OC-1 or OC-3 or OC-12 line to the low-speed group(s). The OLIU circuit packs are equipped in pairs. Low-speed interface growth proceeds in four DS1 increments by equipping the low-speed slots with DS1 or DS1PM circuit packs. The system controller (SYSCTL) is always required in this application.

Figure 3-16 shows a 1x1 low-speed protection configuration with four low-speed groups (A, B, C, D) for a maximum of four service and four protection units per multiplexer and equipped to interface an OC-1 line.

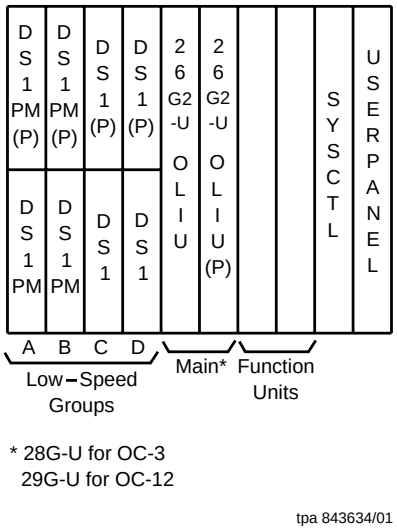

Figure 3-16. DDM-2000 FiberReach 16 1x1 Protected DS1 Services Only

A 1x7 protection architecture is shown in Figure 3-17, allowing up to seven service and one protection unit per multiplexer. Any unequipped slots require a 177A apparatus blank.

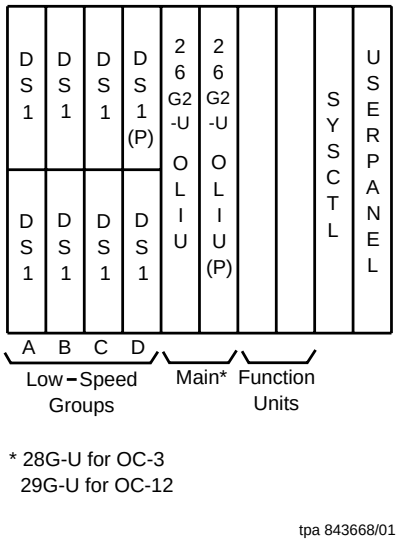

Figure 3-17. DDM-2000 FiberReach 1X7 Protected DS1 Services Only

This same configuration would also be used for unprotected DS1s, as shown in Figure 3-18. The low-speed interface growth proceeds in four DS1 increments by equipping the low-speed slots with DS1 or DS1PM circuit packs for a maximum of seven service units per multiplexer.

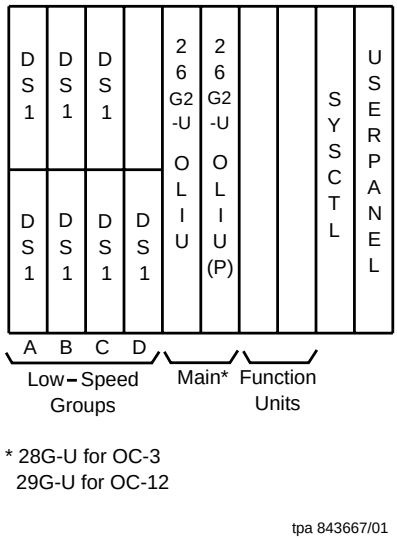

Figure 3-18. DDM-2000 FiberReach Unprotected DS1 Services Only

T1 Extensions Only

Figure 3-19, Figure 3-20, and Figure 3-21 show examples of the DDM-2000 FiberReach in a T1 extension configuration. The wideband shelf is a complete DS1 to OC-1 solution; therefore, the narrowband shelf is not used for this application. The wideband shelf uses the two main OLIU slots to interface an OC-1 or OC-3 or OC-12 line to the low-speed group(s). The OLIU circuit packs are equipped in pairs, one service and one protection [denoted (P)]. Low-speed interface growth proceeds in two DS1 increments by equipping the low-speed slots with dual T1 extension circuit packs. The SYSCTL is always required for these applications. Primary lightning protection (Lucent Technologies' protector unit 4B3EW or equivalent) and the secondary lightning and surge protection assembly (mounted externally to the DDM-2000 FiberReach shelf) are required for outside plant applications.

Figure 3-19 shows a 1x1 low-speed protection configuration with four low-speed groups (A, B, C, D) for a maximum of four service and four protection units per multiplexer. Primary (Lucent's protector unit 4B3EW or equivalent) and secondary lightning protection assemblies are required for each tip/ring pair of a T1 extension.

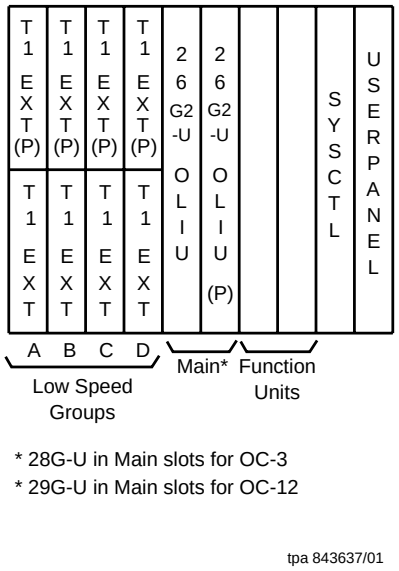

Figure 3-19. DDM-2000 FiberReach with 1x1 Protected T1 Extension Services

A 1x7 protection architecture, shown in Figure 3-20, allows up to seven service and one protection unit per multiplexer. A 177A apparatus blank is required in any unused slots.

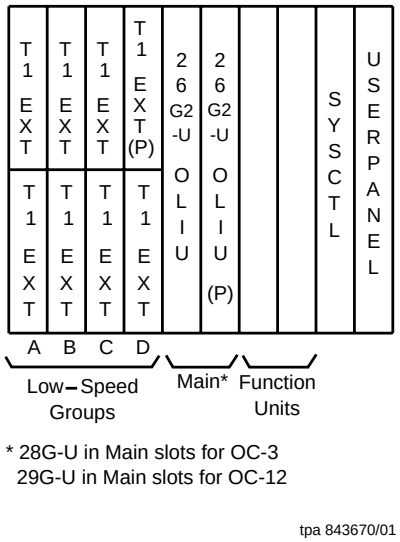

Figure 3-20. DDM-2000 FiberReach with 1x7 Protected T1 Extension Services

This same configuration would also be used for unprotected T1 service, as shown in Figure 3-21, for a maximum of seven service units per multiplexer.

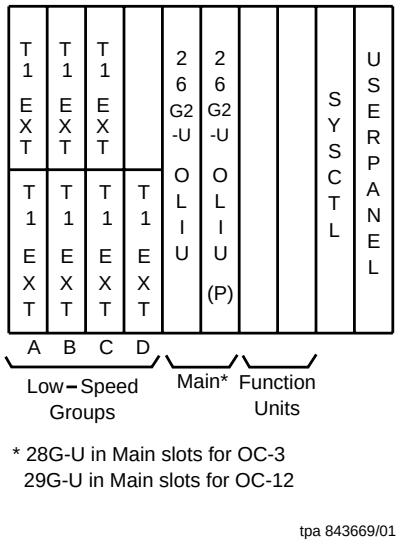

Figure 3-21. DDM-2000 FiberReach with Unprotected T1 Extension Services

T1 Extensions and DS1 Service

Figure 3-22 shows an example of the DDM-2000 FiberReach in a combination configuration of T1 extensions and DS1 service. The low-speed slots would be equipped based on the service needs in either two DS1 increments for T1 extensions, protected or unprotected, or four DS1 increments for DS1 service, protected or unprotected. The combination shown here is four protected T1 extensions with eight protected DS1 services. Primary lightning protection (WE4B tubes or equivalent) and the secondary lightning and surge protection assembly (mounted externally to the DDM-2000 FiberReach shelf) are required for outside plant applications.

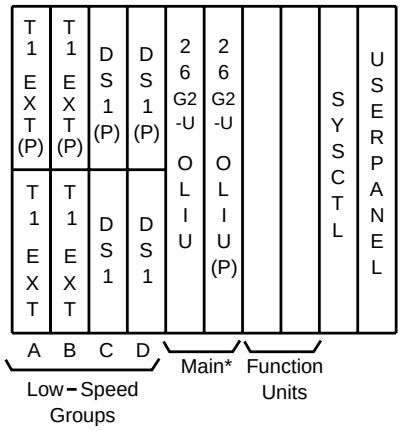

* 28G-U in Main slots for OC-3
29G-U in Main slots for OC-12

tpa 843640/01

Figure 3-22. DDM-2000 FiberReach with Four 1x1 Protected T1 Extensions and Eight 1x1 Protected DS1 Services

A configuration with unprotected T1 extension service and protected DS1 services is shown in Figure 3-23.

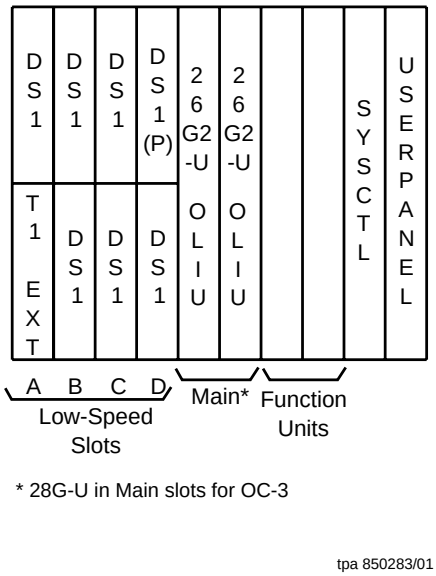

Figure 3-23. DDM-2000 FiberReach with Unprotected T1 Extensions and 1x7 Protected DS1 Services

HDSL Services

Figure 3-24 and Figure 3-25 show examples of the DDM-2000 FiberReach in a wideband application providing HDSL interface capability. The wideband shelf uses the two main optical line interface unit (OLIU) slots to interface an OC-3 or OC-12 line to the low-speed group(s). The OLIU circuit packs are equipped in pairs. Low-speed interface growth proceeds in two HDSL circuit packs increments by equipping the low-speed slots with a HDSL circuit pack. The SYSCTL and user panel are always required in this application.

Figure 3-24 shows an unprotected low-speed configuration with the maximum of three HDSL packs (six HDSL circuits). The Main slots are equipped with OC-3 OLIUs in this example.

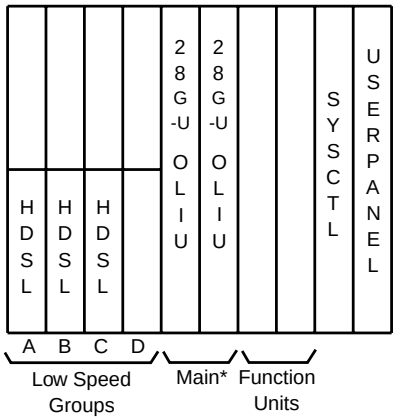

Figure 3-24. DDM-2000 FiberReach — 6 Unprotected HDSL Circuits (Unprotected)

Figure 3-25 shows examples of the DDM-2000 FiberReach in a wideband application providing protected HDSL services. The wideband shelf uses the two Main optical line interface unit (OLIU) slots to interface an OC-3 line to the low-speed group(s). The OLIU circuit packs are equipped in pairs. Low-speed interface growth proceeds in four DS1 increments by equipping the low-speed slots with HDSL circuit packs. The SYSCTL and user panel are always required in this application.

Figure 3-25 shows a 1x2 low-speed protection configuration with a maximum of 3 HDSL packs (six HDSL circuits).

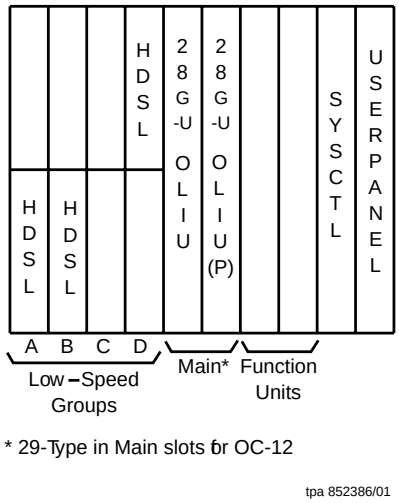

Figure 3-25. DDM-2000 FiberReach — 1x2 Protected HDSL Services (1X2 Protection Mode)

DS3 and DS1 Services

When equipped with OC-1 OLIUs, the DS3 uses all of the capacity of the line. Hence, there is no capacity for DS1 service. See Figure 3-26 and Figure 3-27.

DS3 Interface (BBG4/BBG4B)

Protected DS3 access is available by using the BBG4(B) in the Function Unit slots of Figure 3-28. DS3 access is through BNC connectors on the rear of the FiberReach shelf.

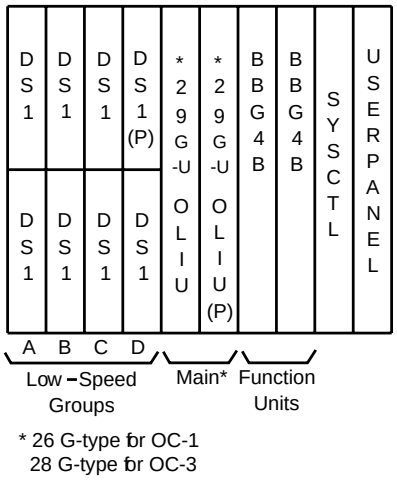

Figure 3-26. DDM-2000 FiberReach with OC-12 Optics in Main Slot Providing DS1 and DS3 Services

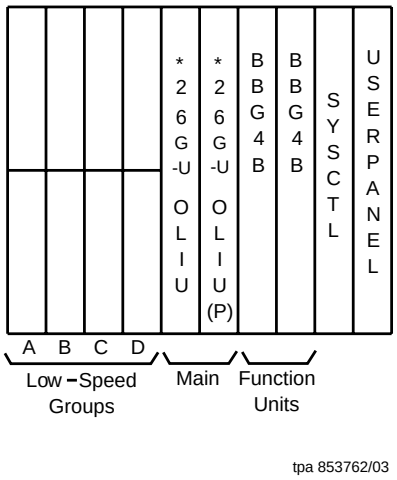

Figure 3-27. DDM-2000 FiberReach with OC-1 Optics in Main Slot Providing DS3 Services

Data Services Interface

Figure 3-28 shows an example of BBG19 (DS3) Data Services Interface application. Figure 3-29 shows an example with OC-1 optics in the Main providing Data Services.

A BBG19 is installed in each Function Unit slot. These circuit packs provide a clear channel DS3 interface to external data communications equipment like LAN routers/ATM switches. Such products support data services interfaces like NMLI, FDDI, and ATM DS3 rate. DS3 access is through BNC connectors on the circuit pack faceplate. Protection switching is performed external to the FiberReach shelf. When the main slots are equipped with 26-type (OC-1) OLIUs, there is no capacity for mixing DS3 and DS1.

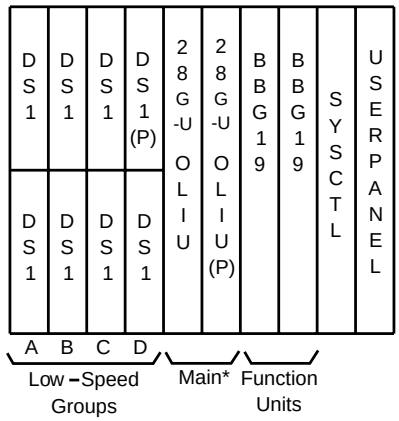

Figure 3-28. DDM-2000 FiberReach DS3 Data Services Application

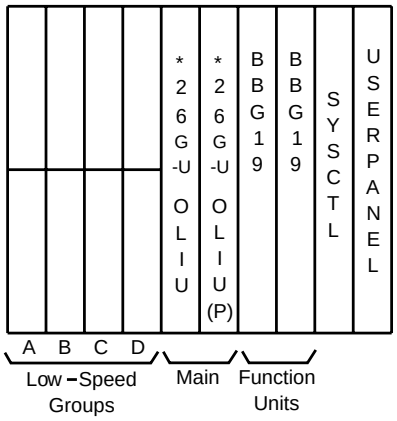

Figure 3-29. DDM-2000 FiberReach with OC-1 Optics in Main Slot Providing Data Services

STS-3c 0 X1 Application

Figure 3-30 shows a FiberReach shelf configured to provide an OC-3c customer interface. Both Main slots must be equipped with 28-type OC-3 OLIUs or 29-type OC-12 OLIUs and Function Unit slots with one or two 22-type OLIUs.

NOTE:
The features described above also apply to 28-type and 29-type OLIU circuit packs.

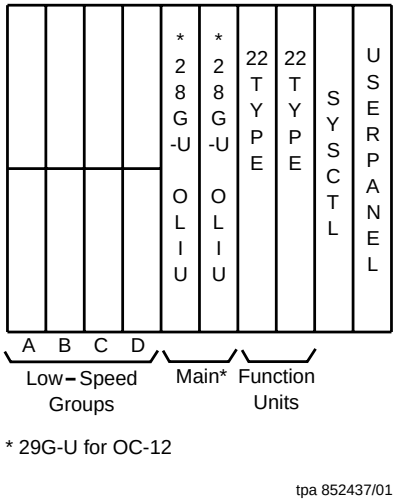

Figure 3-30. STS-3c 0 x 1 Application

DDM-2000 FiberReach Narrowband Shelf

The DDM-2000 FiberReach Narrowband Shelf (NBS) is similar to the DDM-2000 FiberReach Wideband Shelf (WBS). Both are approximately 9.5 inches high by 8 inches wide. Either shelf may be mounted in the DDM-2000 FiberReach Multiplex Carrier Assembly, the Wall DT Assembly, and the 61B cabinet. The carrier assembly provides space for up to two wideband shelves, two narrowband shelves, or one wideband shelf and one narrowband shelf plus up to two DS1 jack panel assemblies and one LGX panel assembly. The 61B cabinet provides space for up to two wideband shelves, two narrowband shelves, or one wideband shelf and one narrowband shelf.

The operation of the narrowband shelf requires DLC Release 4.4 in the SLC®-2000 Host Digital Terminal (HDT) and Release 3.0 or later in the DDM-2000 FiberReach Wideband shelf.

There can be up to sixteen circuit packs installed in the NBS. The four common units are always required and they are:

FHB2	DSXBIU	Provides the electrical connection to the Wideband Shelf
AUA413	RGU	Provides ringing voltage
AUA421	CDTU	Provides channel drop test capability
AUA432	PCU	Provides DC voltages from 48 volt battery voltage

There are twelve channel unit positions that can be used for up to 24 voice frequency (VF) lines with Release 4.3 and for up to 48 VF lines with Release 4.4. Refer to Table 3-2 for the channel units that are supported by FiberReach Release 3.0 and later (SLC-2000, Release 4.3 and 4.4).

The SLC-2000 HDT has a SPQ809 MSDT Server in the metallic distribution shelf (MDS) that sends a DSX-1 signal to the collocated WBS. The WBS multiplexes the DSX-1 electrical signals into an OC-1 optical signal and transmits it to the optical network unit (ONU). Another WBS in the ONU demultiplexes the OC-1 optical signal back into the DSX-1 electrical signals and sends them to the DSXBIU in the NBS. In SLC-2000 Release 4.3 the DSXBIU conditions the signals so that one DSX-1 signal is sent to the first six channel unit slots. A second server is required in the HDT to provide the second DSX-1 signal for VF circuits 13 through 24.

DLC Release 4.4 introduces the octet mode which allows up to four DSX-1 signals to be sent to the ONU which the DSXBIU will condition and send to four sets of three channel unit slots. Each set may be used for up to 24 VF circuits or 10 ISDN

lines for a total capacity of 48 VF circuits or 40 ISDN lines. Four servers are required in the HDT to provide the four DSX-1 signals for VF circuits 1 through 48.

A T1 metallic facility can also be used to connect the HDT server to the DSXBIU. The number of T1 lines and the release of the HDT DLC software will determine the capacity of the NBS.

The DDM-2000 FiberReach narrowband shelf is shown in Figure 3-31 and Figure 3-32.

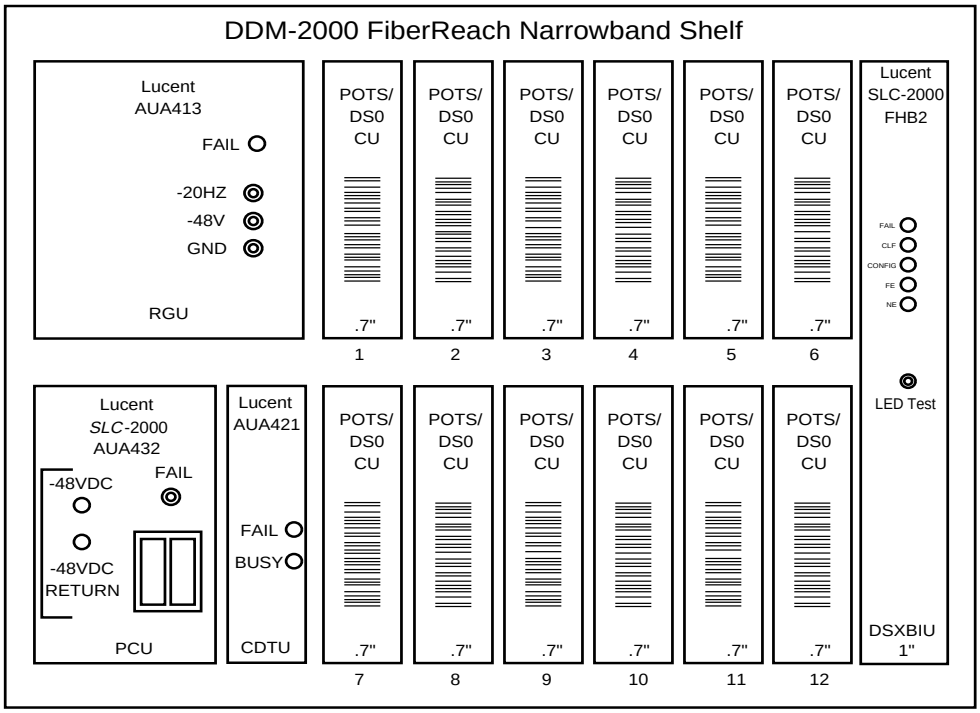

Figure 3-31. DDM-2000 FiberReach Multiplexer Narrowband Shelf — Front View

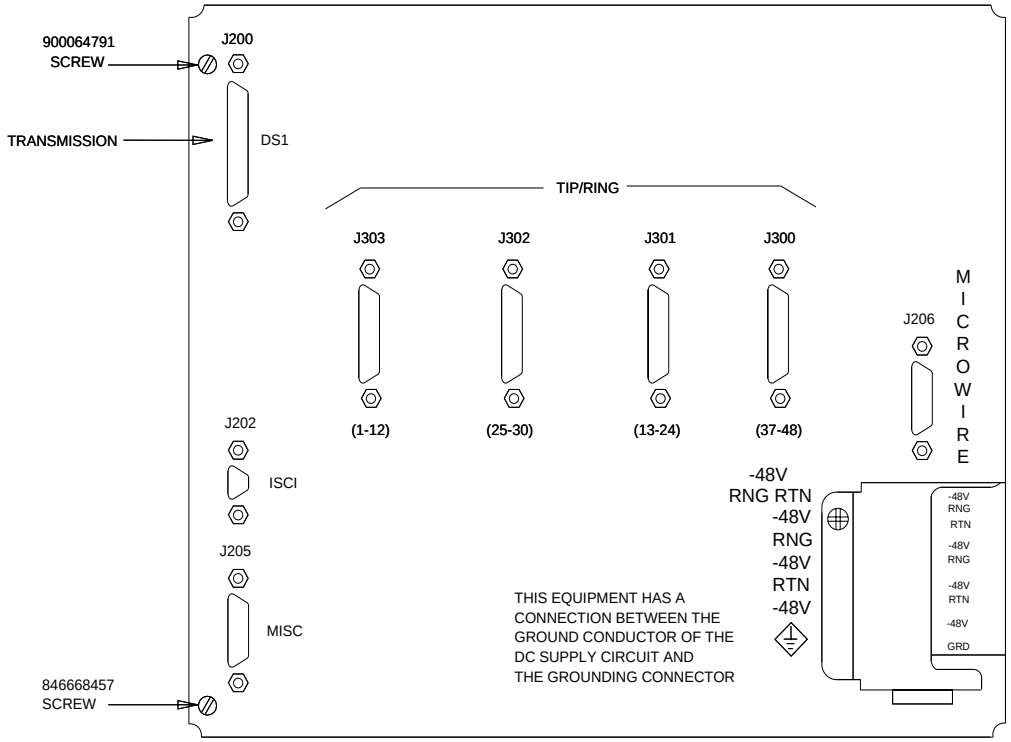

Figure 3-32. DDM-2000 FiberReach Multiplexer Narrowband Shelf — Rear View

Table 3-2 lists the circuit packs that can be housed in the 12-channel unit slots of the narrowband shelf. All circuit packs within the DDM-2000 FiberReach narrowband shelf are unprotected. These channel units are the same as those used in the *SLC*®-2000 Access System Multi-Services Distant Terminal (MSDT). Table 3-2 also indicates which circuit packs are available with each *SLC*-2000 software release.

Table 3-2. DDM-2000 FiberReach Narrowband Shelf Channel Unit

Product Code	Functional Name	Available With *SLC*-2000 Release
AUA25B*	POTS/M SPOTS CU CF (Discontinued Availability)	4.4
AUA27*	POTS CF + OHT (Versus feature not available)	4.4
AUA39	POTS/SPOTS CU CS + OHT/CLASS (Discontinued Availability)	4.4
AUA41	4W VF CF (Discontinued Availability)	4.4
AUA41B	4-Wire CF, (FXS/ETO/DX)	4.4
AUA42*	E SPOTS CU at COT (Discontinued Availability)	4.4
AUA42B	E SPOTS CU at COT	4.4
AUA43B	E SPOTS CU CF	4.4
AUA44*	4-Wire VF CS (Includes TDM Signaling) (Discontinued Availability)	4.4
AUA44B	4W VF CS I (Includes TDM Signaling)	4.4
AUA45B	Dual Ringing Repeater (Manual Ring)	4.4
AUA52	OCU Dataport (Discontinued Availability)	4.4
AUA52B	OCU Dataport, All-rate	4.4
AUA53	Coin CF	
AUA53B	Single Coin CF	4.4
AUA54	4W VF Types I and II E&M (Discontinued Availability)	4.4
AUA54B	4W VF Types I and II E+M/PLR	4.4
AUA55	Multiparty CF	4.4
AUA55B	Multiparty CF (Discontinued Availability)	4.4
AUA56	DID/DPT (Discontinued Availability)	4.4
AUA56B	Dual DID/DPT	4.4
AUA57	FSR CF	4.4
AUA59	SPOTS CU CF + OHT/CLASS (Discontinued Availability)	4.4
AUA75*	Private Line Automatic Ring (PLAR)	4.4
AUA93	ISDN BRITE II, ANSI-U†	4.4
AUA94	ISDN Dual *ANSI*-U	4.4
AUA150*	POTS/SPOTS CU CF + OHT/CLASS	4.4
AUA150C	Dual POTS/SPOTS CF + OHT/CLASS + ALC	4.4
AUA152‡	OCU dataport (TR-08/INA VRTs) (Discontinued Availability)	4.4
AUA158B	ALC POTS CF + OHT/ CLASS (Discontinued Availability)	4.4
AUA158C	ALC POTS CF + OHT/CLASS (Discontinued Availability)	4.4
AUA158D	Dual POTS (ALC+ CF + OHT/CLASS + Adaptive Balance)	4.4
AUA159B	ALC POTS/SPOTS CF + OHT/CLASS (modified OHT loss)	4.4

Product Code	Functional Name	Available With *SLC*-2000 Release
AUA159C	ALC POTS/SPOTS CU + OHT/CLASS	4.4
AUA178	ALC C-POTS CF OHT/CLASS (Discontinued Availability)	4.4
AUA178B	C-POTS (ALC + Adaptive Balance + Extended Range to 1400 OHMS + OHT + CLASS)	4.4
AUA179	ALC POTS/SPOTS CU + ALIC5 + OHT/CLASS	4.4
AUA200	2-wire switched 56-kb/s DPX	4.4
AUA232	RS-232 DSU Dataport	4.4
AUA252	OCU Dataport with SW56 (Discontinued Availability)	4.4
AUA252B	OCU Dataport with SW56 (2.4, 4.8, 9.6, 19.2, 38.4, 56, and 64 kilobits data rates)	4.4
AUA293	ISDN BRITE III, ANSI-U	4.4
MCU§5205	Metallic Channel Unit (Tollgate)	4.4
SPQ®300	POTS CS + OHT/CLASS + LSAS	4.4
SPQ340	*SLC*-2000 ALC POTS/SPOTS® CU CS + OHT/CLASS + LSAS	4.4
SPQ400*	*SLC*-2000 ALC POTS CF + OHT/CLASS (Discontinued Availability)	4.4
xSPQ400*	*SLC*-2000 ALC POTS CF + OHT/CLASS	4.4
SPQ400*B	ALC POTS CF + OHT/CLASS (Discontinued Availability)	4.4
SPQ400C	Quad POTS (CF + OHT/CLASS)	4.4
SPQ401*	*SLC*-2000 ALC POTS CF + OHT/CLASS (Discontinued Availability)	4.4
SPQ401B	*SLC*-2000 POTS/SPOTS CU CS + DHT/CLSS + LSAS VFDE (Discontinued Availability)	4.6
SPQ402	Quad POTS (CF + OHT/CLASS + ALC + VFDE + Adaptive Balance, 1400 OHMS)	4.4
SPQ419	Quad Coin CF	4.4
SPQ429	Quad EBS P-Phone (Discontinued Availability)	4.4
SPQ440	Quad SLC-2000 ALC POTS/SPOTS CU CF + OHT + CLASS + CLSS (Discontinued Availability)	4.4
SPQ440B	Quad POTS/SPOTS ALC CF + OHT + CLASS + CLSS (Discontinued Availability)	4.4
SPQ440C*	Quad Extended Range SPOTS (Discontinued Availability)	4.4
SPQ440D*	Extended Range SPOTS; VFDE	4.6
SPQ442	*SLC*-2000 E SPOTS CU CS	4.4
SPQ443*	*SLC*-2000 E SPOTS CU CF	4.4
SPQ450	ALC POTS/SPOTS CU CF + OHT/CLASS ALIC5 + LSAS	4.4
SPQ452	*SLC*-2000 OCU Dataport	4.4

Product Code	Functional Name	Available With *SLC*-2000 Release
SPQ453	Dual Coin CF	4.4
SPQ456	Quad DID	4.4
SPQ460	Quad POTS/SPOTS (ALC, CF + Extended Range + VFDE)	4.4
SPQ478	*SLC*-2000 ALC C- POTS CF OHT/CLASS	4.4
SPQ494	Quad ISDN ANSI-U	4.4
SPQ909	Lower-power POTS CF + OHT/CLASS	4.4

* Some engineering restrictions (for example, power limitations) must be considered when using this channel unit.

† Registered trademark of American National Standards Institute, Inc.

‡ GTE only.

§ Trademark of Tollgate Communications, Inc.

Secured-Area Telecommunication Applications Cabinet (STAC) System

The DDM-2000 FiberReach Narrowband and Wideband Multiplexers are available in the new modular indoor cabinet. The STAC System targets the needs of the local access market with a flexible and affordable configuration.

Each cabinet is assembled and can be completely wired and system tested at the factory to assure the highest standard of quality and quick trouble free installation.

There are two modules available:

- FRC-2000 module (26” W x 15” D x 12” H)
- Pedestal battery module (26” W x 15” D x 24” H).

Features of the 12” module include:

- Wall mountable
- Floor mountable with spacer
- Spacer that allows the user to stack modules on top of each other
- Holds a combination of two FiberReach shelves
  - 1 wideband shelf and 1 narrowband shelf
  - 2 narrowband shelves
- Holds up to two rectifiers
  - Lucent Technologies RSO 400 Series
  - 400 watts each
- Fiber administration shelf
- Tilts down for easy access to back of equipment
- Allows access to rear of module to facilitate cable administration.

Features of the pedestal battery module include:

- Floor mountable
- Front door removable and provisioned for padlock
- Spacer that allows electronic module to be stacked on top
- Holds up to 2 string of batteries
  - Lucent Technologies’ HR Series Battery
- Provides up to 8 hours of battery backup
- Includes low voltage disconnect and fusing unit.

Figure 3-33 and Figure 3-34 illustrate two possible mounting configurations. Refer to Cabinet Practice 640-030-206 for more information.

Construction

This space efficient modular cabinet is manufactured with corrosion resistant materials. Aluminum is used for the cabinet body and the majority of the cabinet components. The electronics modules are equipped with power and battery alarms which can be connected to a monitoring system at a central location to notify the user in the event of equipment trouble.

Reliability

The cabinet has undergone extensive system testing and qualification by Bell Laboratories based on expected worst case conditions to ensure high reliability and trouble free field performance. These test results are correlated with actual field data to validate cabinet performance. This extensive testing provides assurance that Lucent Technologies cabinet solutions meet specific application and performance needs of the customer.

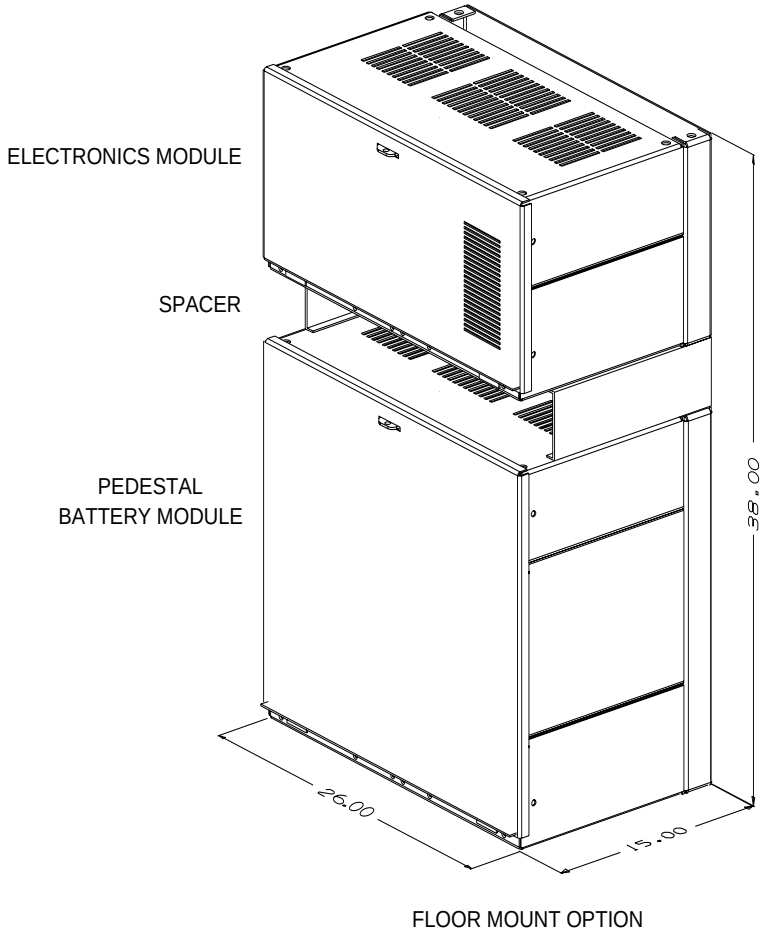

Figure 3-33. STAC System, FRC-2000 Module with Pedestal Battery Base

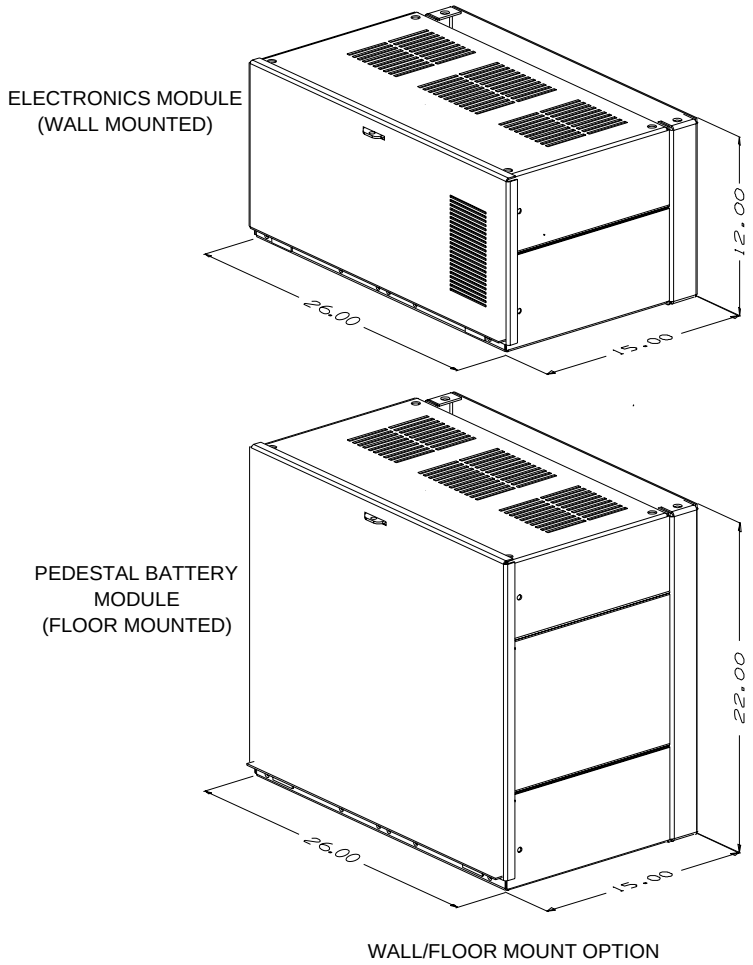

Figure 3-34. STAC System, FRC 2000 Module Wall Mount Option with Separate Pedestal Battery Module

Power

4

Contents

Overview 4-1

Introduction 4-1

Wideband Shelf -48 V Battery Powering 4-1

- Power Distribution 4-3
- Wall Distant Terminal Powering for WBS and NBS 4-4
- Wideband Shelf Transmission Circuit Packs 4-6
  - OLIU Circuit Packs 4-6
  - DS1/DS1PM Circuit Packs 4-6
  - Control Circuit Packs 4-6

Narrowband Shelf –48 V Battery Powering 4-6

- Other Power Options 4-8
- Wall Distant Terminal Powering 4-9
- Narrowband Shelf Transmission Circuit Packs 4-10
  - FHB2 Digital Signal Cross-Connect Backplane Interface Unit (DSXBIU) 4-10
  - AUA432 Power Converter Unit (PCU), BGW1 Power Supply Unit (PSU) 4-10
  - Ringing Generator Units (RGU) 4-11
  - AUA421 Channel and Drop Test Unit (CDTU) 4-12
- LEDs 4-12
- Power Minor Alarm 4-13
- Power Distribution 4-14

Contents

Power

4

Overview

This chapter describes the powering options for the DDM-2000 FiberReach Multiplexer. power options information is provided first for the wideband shelf and then the narrowband shelf.

Introduction

The DDM-2000 FiberReach Multiplexer can be powered from a variety of power sources. The most common powering method is the nominal –48 V DC power available in telecommunication facilities.

Using commercially available 60 V AC or 120 V AC power converters, –48 V DC for FiberReach can be provided.

Wideband Shelf –48 V Battery Powering

The DDM-2000 FiberReach Multiplexer wideband shelf uses on-board power conversion, eliminating the need for slots for bulk power converters. Two independent –48 volt office power feeders (A and B) enter the shelf through dangler cables (cables that come from the rear of the cabinet and “dangle” to provide front access to rear connectors), fused at the user panel, and distributed to the circuit packs. Power conversion is performed through modular power

converters located on the circuit packs. In each circuit pack, the two feeders are diode ORed, fused, filtered, and regulated by the board-mounted power modules. This provides the required redundancy in case of the loss of one feeder or one fuse. Figure 4-1 shows the distribution schematic. The power converter located on the OLIU circuit pack provides power to the DS1 and HDSL circuit packs. T1EXT circuit packs use –48 volts from the backplane to provide line powering with 60mA constant current source. Total power requirements for the wideband shelf are 40 watts for a typical configuration with a 1x7 protected DS1 interface. Total power requirements for the wideband shelf are 65 watts for a typical configuration with a 1x7 protected T1EXT circuit packs.

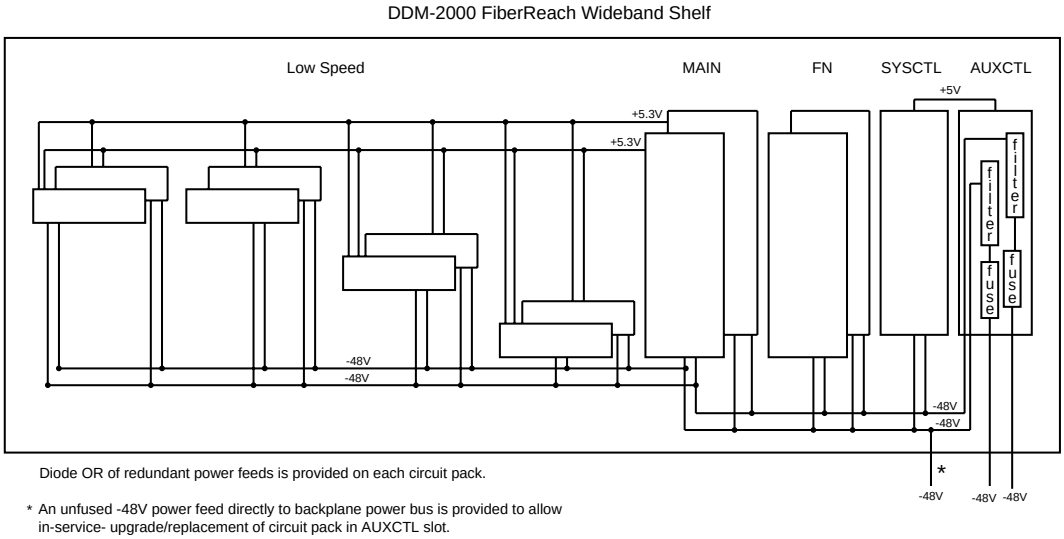

Figure 4-1. DDM-2000 FiberReach Multiplexer Wideband Shelf Power Architecture

Power Distribution

See "Power Requirements" in Chapter 10, "Technical Specifications", for power dissipation values.

Figure 4-2 shows a typical battery feeder interface for a single shelf.

CAUTION:
This information is for a typical application only. Consult 801-525-168, DDM-2000 Floor Plan Data Sheets, and T-82046-30, Power Systems DC Distribution Circuit for Digital Transmission System, for proper engineering of battery plant and feeders.

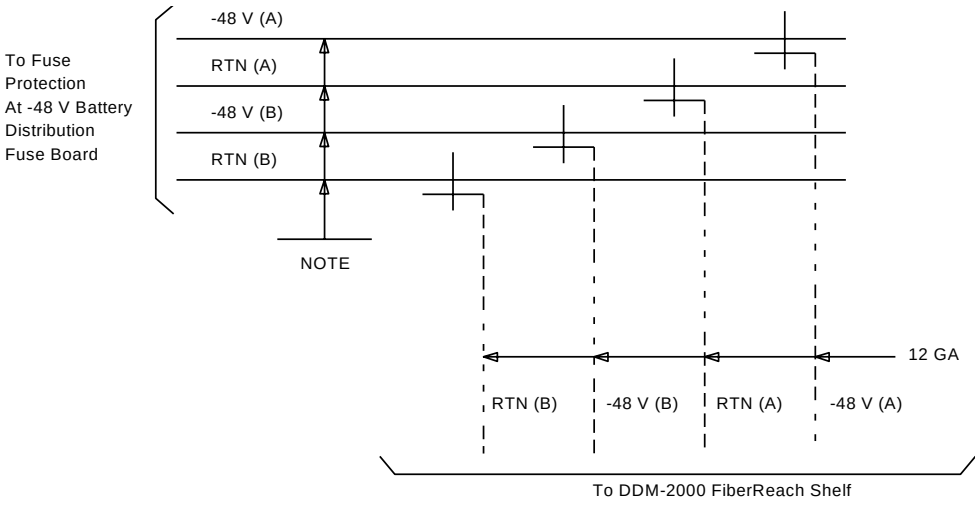

NOTE: Feeder size is selected per T82046-30 and EIM 90MV001, Issue 5.

Figure 4-2. Typical –48 Volt Power Supply for DDM-2000 FiberReach Multiplexer Single Shelf

Wall Distant Terminal Powering for WBS and NBS

The DDM-2000 FiberReach Multiplexer Wall Distant Terminal (Wall DT) uses bulk power converters to support powering from 120 V AC. This converter supplies –48 V to the FiberReach shelf. Customer premise locations usually have 60 V AC or 120 V AC commercial power from utilities. These powering options provide battery backup for up to 8 hours. Figure 4-3 illustrates an example of powering with a power supply for the wideband shelf and another power supply for the narrowband shelf. Figure 4-4 illustrates an example of powering with a single power supply for both the wideband shelf and the narrowband shelf.

•

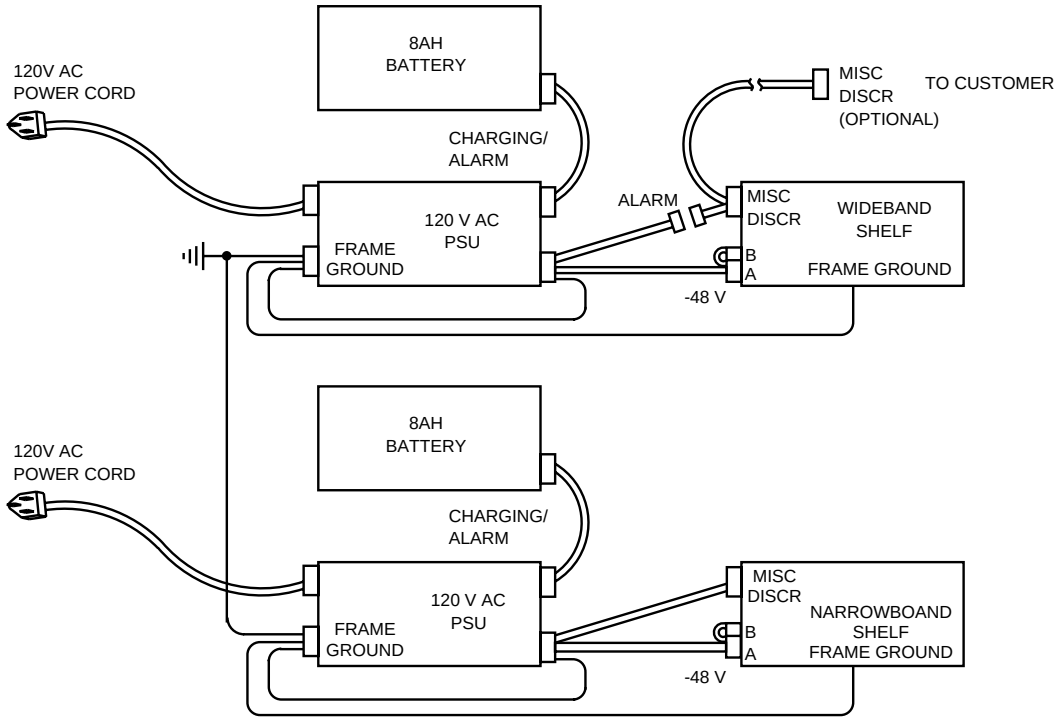

* ALARM CABLE CAN DIRECTLY ATTACH TO THE MISC DISCRETE CONNECTOR ON WBS. OPTIONALLY IT CAN BE CONNECTED TO A "Y" CABLE THAT INTERFACES WITH THE MISC DISCR CONNECTOR ON THE WBS AND HAS A BRANCH THAT FACILITATES PICK-UP OF ADDITIONAL DISCRETE ALARM INPUTS.

Figure 4-3. Wall DT Powering (Power Supply for WBS/NBS)

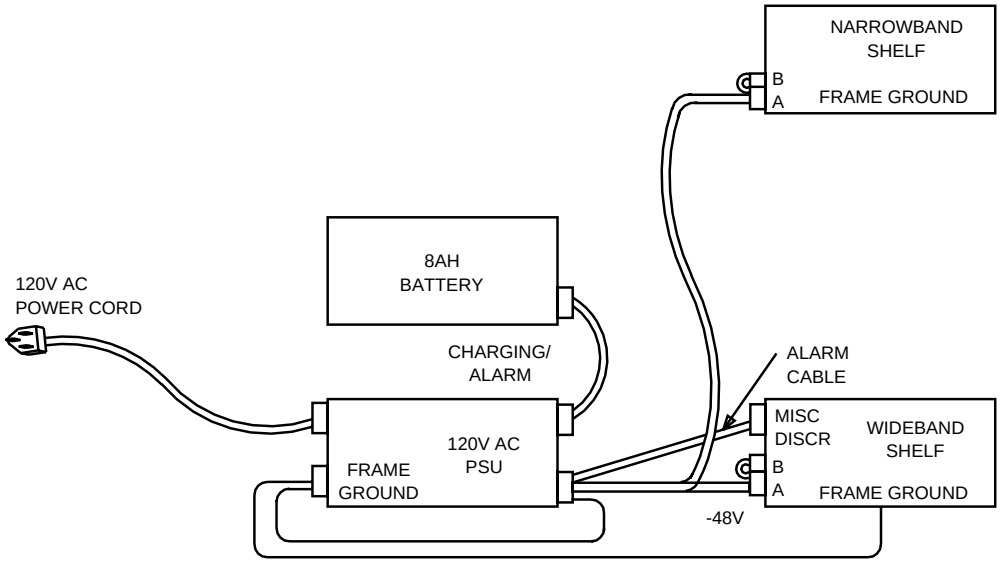

NOTE: Alarming for this arrangement can be from the wideband shelf (cable ED8C852-20 G7) or from the narrowband shelf (cable ED8C785-20 G9). Optionally it can be connected to a "Y" cable (ED8C852-20 G12) that interfaces with the MISC DISCR connector on the wideband shelf only and has a branch that facilitates pick-up of additional discrete alarm inputs.

tpa 850271/02

Figure 4-4. Wall DT Powering (Single Power Supply for WBS/NBS)

Wideband Shelf Transmission Circuit Packs

OLIU Circuit Packs

The OLIU circuit packs are powered by two DC-to-DC converters located on the circuit packs. The backplane power feeders supply A and B –48 volts to these converters via diode ORed circuits and are fuse-mounted on each of the circuit packs. One converter supplies +5 volts and the other supplies –5.2 volts.

DS1/DS1PM Circuit Packs

The DS1/DS1PM circuit packs receive +5 volt power via backplane connections from the both OLIU 26G2-U circuit packs in the Main slots. Power selector circuits (diode ORed) and fuses for the +5 volts are located on the DS1/DS1PM circuit packs. The fuses on the DS1/DS1PM circuit packs protect the backplane and prevent DS1/DS1PM unit failures from affecting service in the other DS1 units.

Control Circuit Packs

The SYSCTL circuit pack is powered by a –48 volt to +5 volt DC-to-DC converter located on the pack. The backplane power feeders supply A and B –48 volts to these converters via diode ORed circuits and fuses mounted on the circuit packs.

Narrowband Shelf –48 V Battery Powering

The PCU in the DDM-2000 FiberReach narrowband shelf provides fusing and converts a –48 V DC input power feed to voltages required for the other circuit packs in the narrowband shelf. Figure 4-5 shows the power distribution. The narrowband shelf can draw up to 84 watts of power and meets all performance requirements when the DC input voltage varies between –42.5 V and –56.5 V, as specified in TR-499.

•

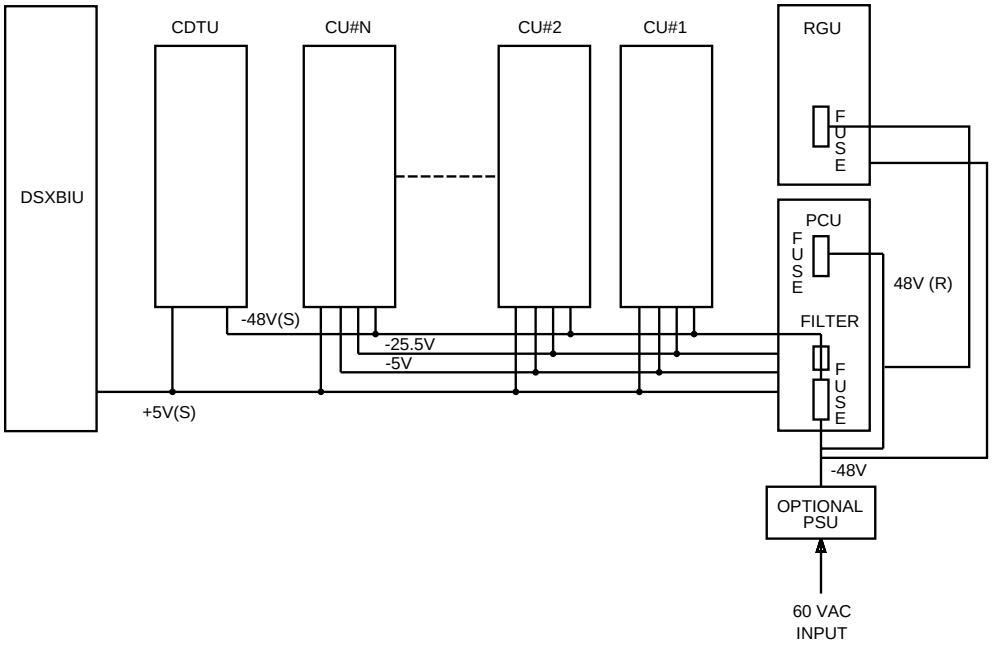

Figure 4-5. DDM-2000 FiberReach Multiplexer Narrowband Shelf Power Architecture

Other Power Options

The DDM-2000 FiberReach Multiplexer uses miscellaneously mounted power converters to support powering from 60 V AC or 120 V AC sources. These converters supply –48 V to the FiberReach shelf. Customer premise locations usually have 120 V AC commercial power from utilities. The 60 V AC is widely used in Cable TV applications. The converters are equipped with necessary lightning protection for outside plant applications. See Figure 4-6.

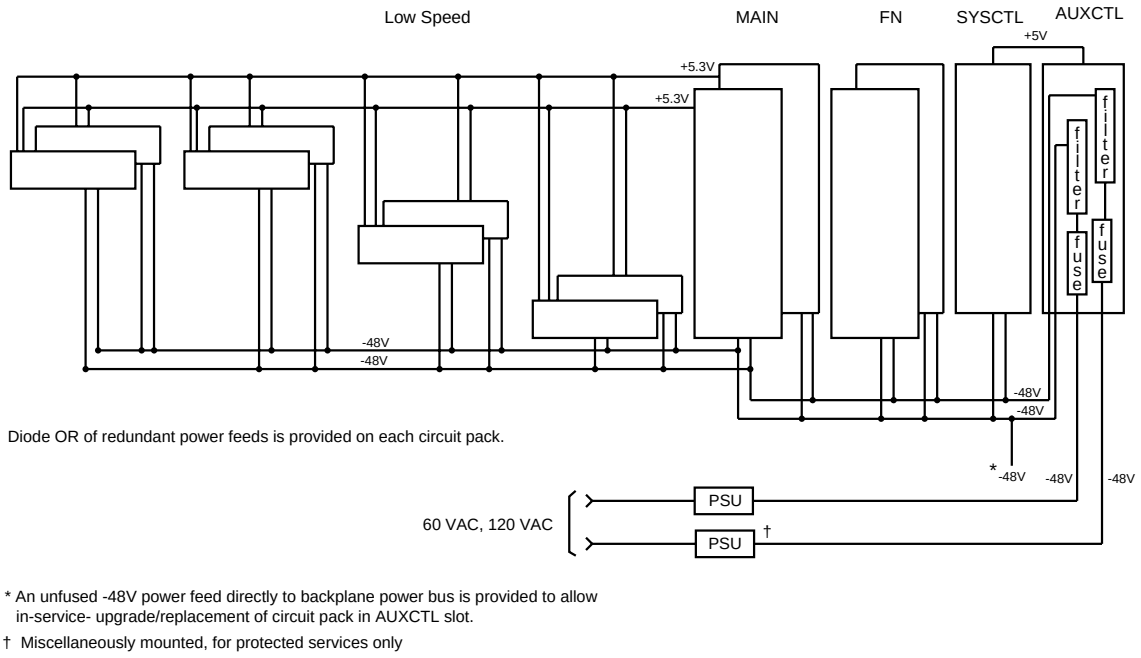

Figure 4-6. DDM-2000 FiberReach Multiplexer — Other Power Options

Narrowband shelf services are supported by *SLC*-2000 Releases 4.3 and 4.4. For Release 4.4, the *SLC*-2000 host must be equipped with the SPQ810 MSDT server unit circuit pack to support both quad and octet mode services. See LTP 363-030-000, *SLC-2000 Access System Application, Planning, and Ordering Guide* for additional information.

Wall Distant Terminal Powering

The DDM-2000 FiberReach Multiplexer Wall Distant Terminal (Wall DT) uses bulk power converters to support powering from 120 V AC. This converter supplies –48 V to the FiberReach shelf. Customer premise locations usually have 60 V AC or 120 V AC commercial power from utilities. These powering options provide battery backup for up to 8 hours. Figure 4-7 illustrates an example of powering with a power supply for the wideband shelf and another power supply for the narrowband shelf. Figure 4-4 illustrates an example of powering with a single power supply for both the wideband shelf and the narrowband shelf.

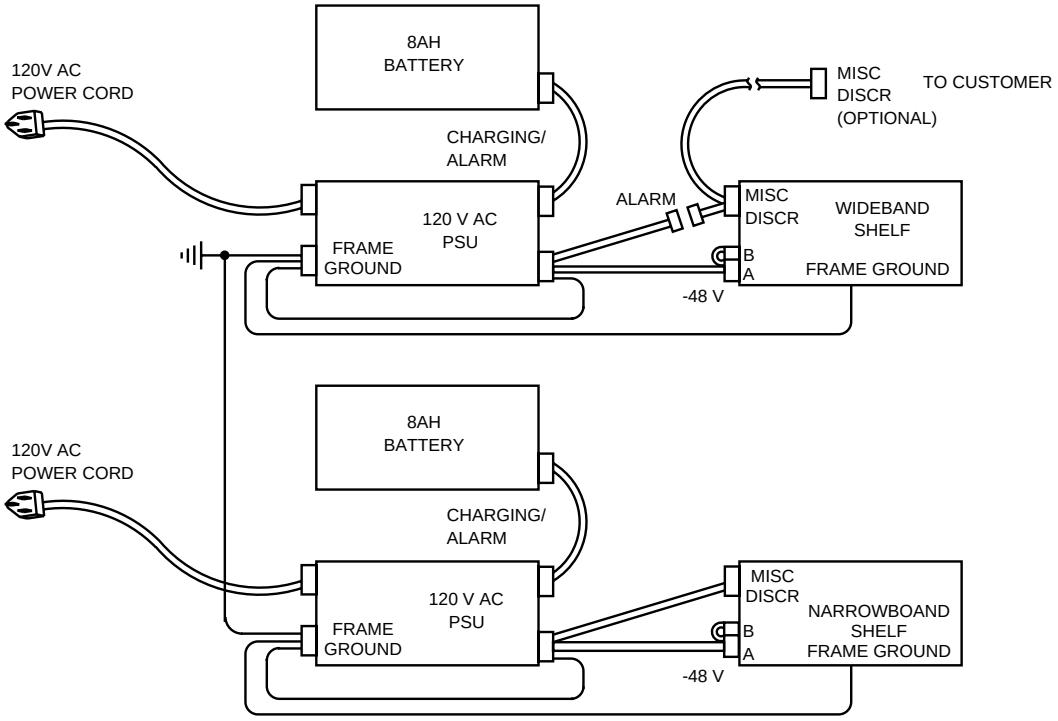

* ALARM CABLE CAN DIRECTLY ATTACH TO THE MISC DISCRETE CONNECTOR ON WBS. OPTIONALLY IT CAN BE CONNECTED TO A "Y" CABLE THAT INTERFACES WITH THE MISC DISCR CONNECTOR ON THE WBS AND HAS A BRANCH THAT FACILITATES PICK-UP OF ADDITIONAL DISCRETE ALARM INPUTS.

Figure 4-7. Wall DT Powering (Power Supply for WB and Power Supply for NB)

Narrowband Shelf Transmission Circuit Packs

FHB2 Digital Signal Cross-Connect Backplane Interface Unit (DSXBIU)

The DSXBIU is a narrowband shelf circuit pack that operates as the local controller for the narrowband shelf and multiplexes the DS0 signals from the channel units to DS1 interfaces. The DS1 interface is fed from the DSXBIU to a DS1 circuit pack on the wideband shelf. Software for the DSXBIU is automatically downloaded from the *SLC*-2000 host digital terminal.

The DSXBIU interfaces to the 12 channel units on the narrowband shelf, providing provisioning and inventory information, as well as clock generation and synchronization. The DSXBIU communicates with the common units via a serial protocol microwire link. A separate microwire RS-422 interface connects with the power supply unit. A bank control link on the DSXBIU is used to communicate with the channel units.

The CDTU also contains a drop test circuit to determine the health of the metallic drop beyond the local DDM-2000 FiberReach shelf. The CDTU can detect the following:

- Hazardous voltage
- Foreign voltage
- Metallic leakage
- Receiver off-hook
- Lack of continuity to the station set.

The circuit pack contains a red fail LED to indicate an internal failure in the CDTU circuit pack and a green busy LED to indicate that a test session is active.

AUA432 Power Converter Unit (PCU), BGW1 Power Supply Unit (PSU)

The AUA432 PCU is located in the narrowband shelf and accepts –48 V DC power. The PCU converts incoming –48 V DC to +5 and –5 V DC, as well as –25.5 V DC for use by various channel units that may be in the narrowband service card slots. The PCU provides power to all the circuit packs on the narrowband shelf by converting incoming – 48 V DC power to voltages required for the various circuit packs.

The BGW1 PSU, miscellaneously mounted with the DDM-2000 FiberReach shelf, terminates a 60 V AC from a network-provided source (for example, centralized power). The PSU converts incoming 60 V AC to –48 V DC for use by the wideband and narrowband shelves. In applications where –48 V DC is readily available, the PSU is not required. Other powering options will be available with future releases of the PSU.

Ringing Generator Units (RGU)

The AUA413 and AUA423 RGUs are used in the *SLC*-2000 MSDT as well as the DDM-2000 FiberReach narrowband shelf. The AUA413 provides 20-Hz negative-superimposed ringing current to satisfy loop applications for 0 to 132 ohms and AUA423 should be placed in an NBS where any channel units are used whose range exceeds 132 ohms. (See Figure 4-8.) The AUA413 and AUA423 RGUs receive an input voltage in the -42 to -60 V DC range from the power converter unit (PCU) and supply a ringing voltage of 20 Hz, 80 or 100 V rms sine wave, respectively, superimposed on the negative input voltage. Both can ring up to three lines simultaneously. Each line may have a maximum load of the five ringer equivalent numbers (RENs). The AUA423 RGU satisfies the ringing requirements for the longer loop applications where the loop impedance exceeds 130 ohms. Each of the faceplates contains an LED indicator (FAIL) and three test points **(-20HZ, -48V**, and **GND)**.

An output alarm monitor circuit on the RGU monitors the output ringing voltage for an over- or under-voltage condition and activates a red fail LED when either condition occurs. This circuit pack is protected from lightning and power surges by the output surge protection circuit.

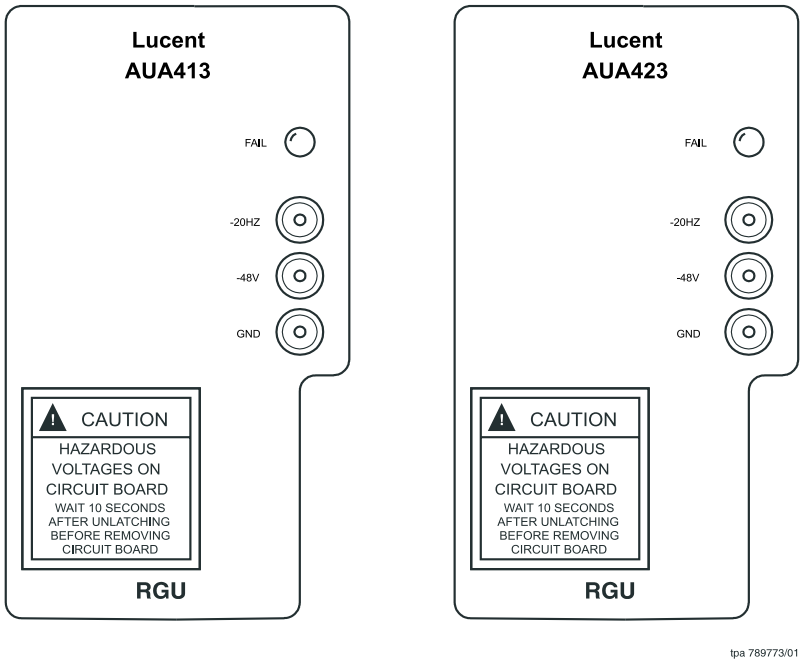

Figure 4-8. AUA413 and AUA423 Ringing Generator Units

AUA421 Channel and Drop Test Unit (CDTU)

The CDTU circuit pack is used in the *SLC*-2000 MSDT as well as the DDM-2000 FiberReach narrowband shelf. This circuit pack provides the remote end terminations and detectors required to support end-to-end channel testing of two-wire locally-switched services, such as POTS, coin, and multiparty services. When a channel test request is received on the narrowband shelf, the DSXBIU instructs the channel unit associated with the channel under test to operate its test relay. The DSXBIU then informs the CDTU that a test is occurring, and the CDTU then performs a drop test and reports the results back to the DSXBIU. The CDTU provides channel test terminations in sequence based on results from the channel test detectors and instructions from the DSXBIU. This circuit pack is optional.

LEDs

Two green power on (PWR ON) indicators on the user panel show that the shelf is receiving fused –48 volt power from each of two services. The indicator remains illuminated as long as the associated –48 volt feeder is supplying power to the shelf.

Normally the FAULT LED on the circuit pack faceplates is operated via the controller which provides a ground return for current generated by the on-board converter. In the event of a DC-to-DC converter failure, the LED will be operated via the –48 volt power leads. The –48 volt power leads are supplied through an electronic gate or relay contact normally held open by the converter. The power, fusing, and LED circuits shown in Figure 4-9, are used on all circuit packs with on-board DC-to-DC converters.

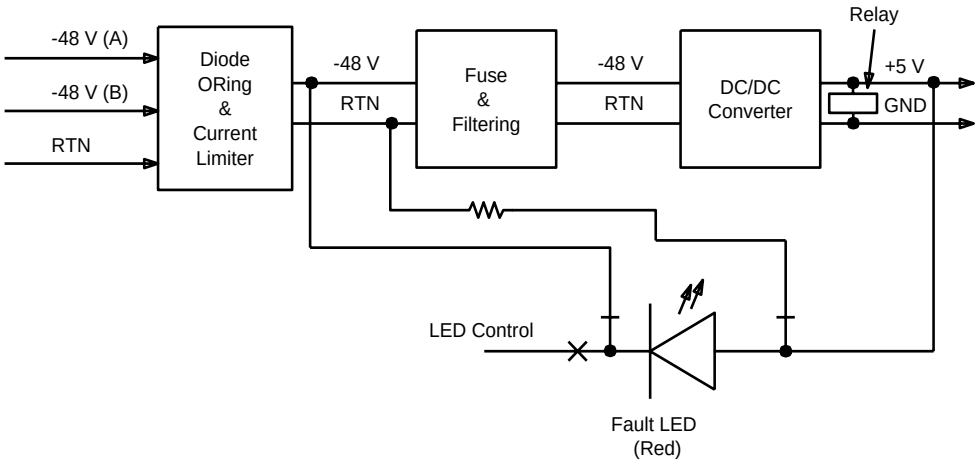

Figure 4-9. Circuit Pack Power and LED Control

Power Minor Alarm

A yellow power minor (PMN) alarm LED is provided on the user panel to indicate an AC power failure at the remote terminal. The power minor alarm can be provisioned at the central office (CO) to be either an office minor (MN) or office major (MJ) alarm.

Power Distribution

See "Power Requirements" in Chapter 10, "Technical Specifications," for power dissipation values.

Figure 4-10 shows a typical battery feeder interface for a single shelf.

CAUTION:
This information is for a typical application only. Consult 801-525-168, DDM-2000 Floor Plan Data Sheets, and T-82046-30, Power Systems DC Distribution Circuit for Digital Transmission System, for proper engineering of battery plant and feeders.

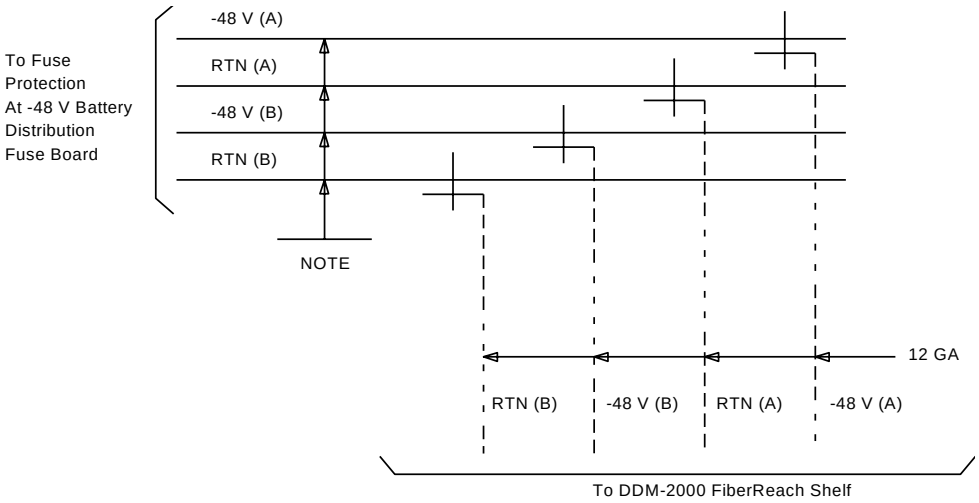

NOTE: Feeder size is selected per T82046-30 and EIM 90MV001, Issue 5.

Figure 4-10. Typical –48 Volt Power Supply for DDM-2000 FiberReach Multiplexer Single Shelf

Transmission and Synchronization

5

Contents

Overview 5-1

Transmission Interfaces 5-1

- DS1 Transmission Interface 5-1
- OC-1/OC-3/OC-12 Transmission Interface 5-1
- T1 Transmission Interface 5-2

Transmission and Architecture 5-2

- Wideband Shelf Interfaces and Multiplexing 5-2
- Wideband Shelf Protection Architectures 5-4
- Narrowband Shelf Interfaces and Multiplexing 5-4
- Wideband and Narrowband Shelf Integration 5-6

Synchronization 5-7

- Manual Timing Pack Switch 5-7
- Subnetwork Configurations 5-7
  - Free Running/Line Timing 5-7
- External Timing/Line Timing Configuration 5-9
- Line Timing/Line Timing Configuration 5-11
- Timing Distribution 5-12

Synchronization Messaging 5-14

- Applications 5-14
  - Automatic Synchronization Reconfiguration 5-14
- Synchronization Provisioning Integrity 5-15
- Feature Details and Options 5-15
- Examples 5-17

Contents

■ Synchronization Reconfiguration in an Access Ring 5-17

Transmission and Synchronization

5

Overview

This chapter describes the transmission and synchronization interfaces for the DDM-2000 FiberReach Multiplexer.

Transmission Interfaces

DS1 Transmission Interface

The DDM-2000 FiberReach wideband shelf supports DS1 interfaces. The DS1 interface accepts any DSX-1 compatible signal (clear channel interfaces).

OC-1/OC-3/OC-12 Transmission Interface

The DDM-2000 FiberReach wideband shelf supports an OC-1/OC-3/OC-12 interface. The OC-1 interface is a 51.84 mb/s SONET interface. For OC-3/OC-12 interface standards, refer to Chapter 10, “Technical Specifications” of 363-206-285, *DDM-2000 OC-3 Multiplexer Release 13.0 and Later User/Service Manual - Volume I*.

T1 Transmission Interface

The DDM-2000 FiberReach wideband shelf supports a T1 interface. The interface accepts two T1 signals. The two signals are mapped into a standard VT1.5 signal, and then multiplexed into one VT-G signal.

Transmission and Architecture

Wideband Shelf Interfaces and Multiplexing

The DDM-2000 FiberReach wideband shelf supports DS1, HDSL (with 28G-U/ 28G2-U [Release 3.1] and 29-type [Release 4.0] OLIUs) and T1 carrier extension interfaces. The DS1 interface accepts any DSX-1 compatible signal (clear channel interfaces). When equipped with 28-type or 29-type OLIUs, the shelf supports 1 protected or 2 unprotected DS3 interfaces, or a single OC-3c interface. When equipped with 26G2-U OLIUs and with Release 4.0, the shelf supports 1 protected or 2 unprotected DS3 interfaces.

Figure 5-1 is an overall block diagram of the DDM-2000 FiberReach Multiplexer. Internally, the Multiplexer uses synchronous optical network (SONET) standard multiplexing. (Refer to Appendix A.) On the low-speed side, asynchronous DS1 signals map into floating mode VT1.5 signals. The VT1.5 signals are combined into virtual tributary groups (VTGs) and then multiplexed to one STS-1 signal. This VT structured STS-1 signal can be combined with an STS-1 signal from the function unit slots along with a pass through STS-1 to form an OC-3 signal.

In the opposite direction, a received OC-N signal is converted back to “N” electrical STS-1 signals. A DS1-formatted STS-1 signal is demultiplexed to VT groups and then to VT1.5 signals. The VT1.5 signals are then converted to DS-1 signals prior to connecting to the DS1 interface.

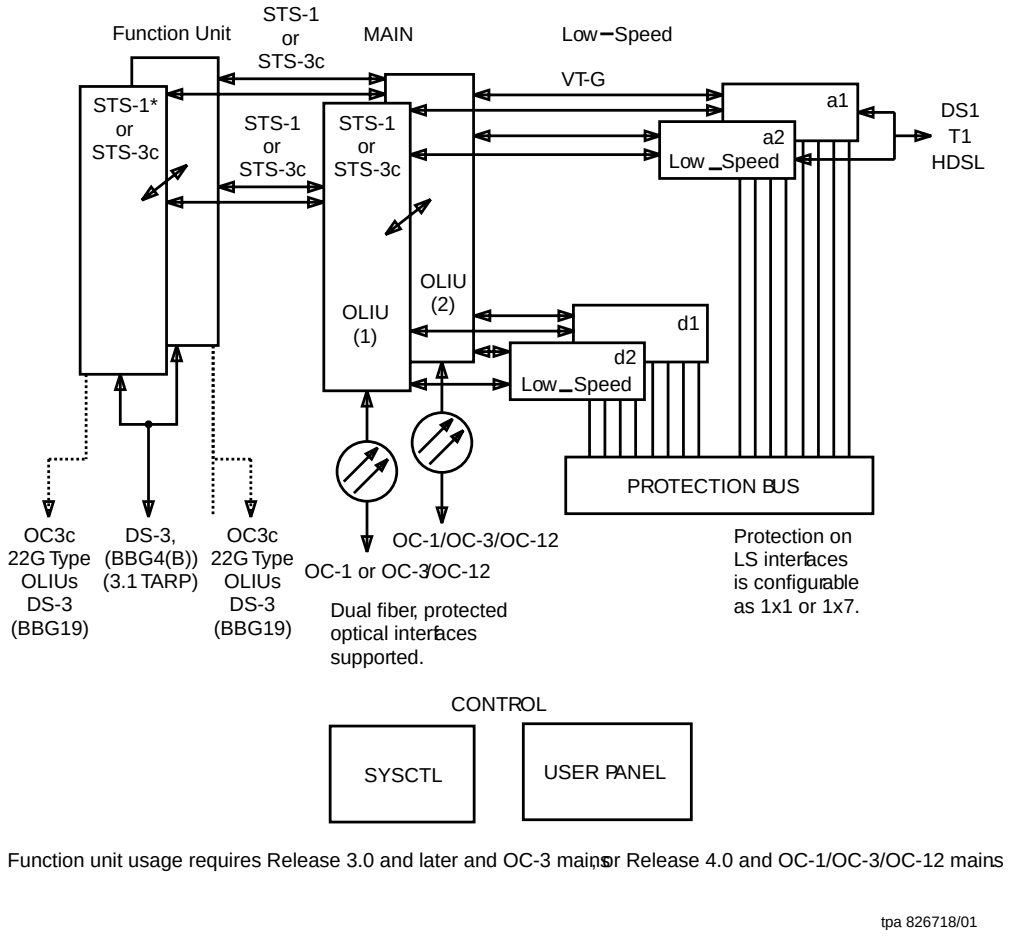

Figure 5-1. DDM-2000 FiberReach Wideband Shelf Block Diagram

Refer to Chapter 9, "Maintenance Description," for additional details on equipment and path protection switching.

Wideband Shelf Protection Architectures

The eight low-speed interface slots of the DDM-2000 FiberReach wideband shelf can be configured in two protection architectures: 1x1 protected or 1x7 protected. (See Note.) In a 1x1 protection configuration, the eight slots are divided into four low-speed groups — A, B, C, and D. The bottom four slots are the service A, B, C, and D slots and the top four slots are the associated protection A, B, C, and D slots. This configuration is most appropriate for applications with a mixture of low-speed service needs (for example, DS1 and T1 carrier extensions).

NOTE:
A wideband shelf comes with a 1x1 and a 1x7 protection bus module that goes on the backplane. However to change the protection scheme, it must be done out of service.

In a 1x7 protection configuration, the eight slots are provisioned as a single low-speed group with seven service slots and one protection slot. This arrangement is intended for applications where only one type of low-speed service is needed. Multiple types of low-speed services (T1 or DS1 only) can be supported at one time; however only one type will be protected, determined by the type of circuit pack in the protection slot. In both 1x1 and 1x7 protection architectures, the protection slot(s) can be left unequipped, leaving the low-speed service unprotected. The protection architecture can be changed between 1x1 and 1x7 but must be done out of service by installing the appropriate protection module bus on the rear of the shelf as shown in Figure 3-8 (DDM-2000 FiberReach Multiplexer Wideband Shelf — Rear View).

Narrowband Shelf Interfaces and Multiplexing

The DDM-2000 FiberReach narrowband shelf shares the same channel units as the *SLC*-2000 MSDT. However, the narrowband shelf can offer up to 12 slots with a two-DS1 capacity for DS0 services and twice the ISDN services, versus only 6 slots and single DS1 capacity in the MSDT. This provides more flexibility for special services, such as integrated services digital network (ISDN).

The main controller and interface for the narrowband shelf is the digital signal cross-connect backplane interface unit (DSXBIU), which interfaces to the 12 channel units via TCPM and RCPM lines for pulse code modulation and the bank control link (BCL) for provisioning and inventory. See Figure 5-2. Clock generation and synchronization are controlled by the DSXBIU. A ringing generator unit (RGU) sends the ringing signal to all of the channel unit slots. A channel and drop test unit (CDTU) provides the channel and drop testing capability for the narrowband shelf. The power converter unit (PCU) delivers power to the narrowband shelf. The DSXBIU communicates with the common units via a serial protocol link called the microwire link. This link is a serial three-wire clock, transmit, and receive protocol.

For the PSU, the DSXBIU has an additional microwire interface operating at RS-422 levels.

The backplane for the narrowband shelf can be configured in either quad or octet modes. In the quad mode, the 6 channel units in the upper subshelf and the 6 channel units in the lower subshelf provide up to 24 DS0s of service each on a 1-DS1 capacity per subshelf (2 DS1s total). Four DS0 time slots are provided to each physical channel unit slot. In the octet mode, two DS1 links are provided to the 6 channel unit slots in the upper subshelf and two DS1 links are provided to the 6 channel unit slots in the lower subshelf for a total capacity of 96 DS0 or 4 DS1 lines. Eight DS0 time slots are provided to each physical channel unit slot. One DS1 link is provided for each group of three channel unit slots.

Narrowband shelf services are supported by *SLC-2000* Releases 4.3 and 4.4, or later. For Release 4.4, the *SLC*-2000 host must be equipped with the SPQ810 DT server to support both quad and octet mode services. See LTP 363-208-000, *SLC-2000 Access System Application, Planning, and Ordering Guide* for additional information.

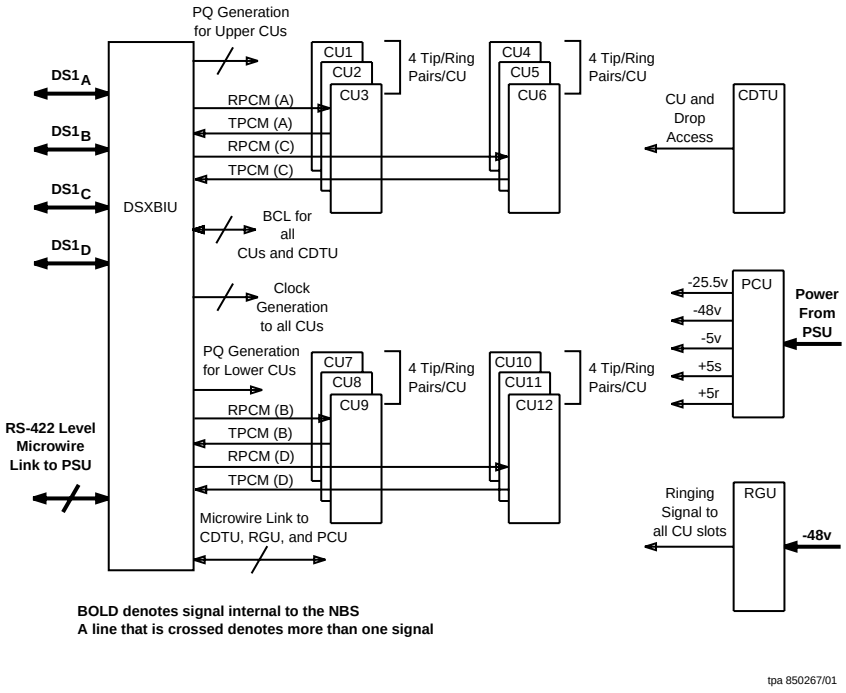

Figure 5-2. DDM-2000 FiberReach Multiplexer Narrowband Architecture (Octet Mode Shown)

Wideband and Narrowband Shelf Integration

The wideband and narrowband shelves communicate with each other via a standard DS1 transmission interface. The electrical interface is compatible with DSX-1 requirements. No control communication exists between the wideband and narrowband shelves.

Synchronization

Each DDM-2000 FiberReach wideband shelf is provisioned to be line-timed from an incoming high-speed interface. In line timing mode, the OLIU circuit pack derives local shelf timing from the incoming OC-1/OC-3/OC-12 high-speed signal in the Main slot. The OLIU digital phase-locked loop (DPLL) also serves to remove any timing transients for improved network jitter performance. If one of the OC-N references is corrupted or unavailable, the OLIU will make a nonrevertive protection switch to the other reference without causing timing degradations. If both OC-N signals are lost (for example, due to a cable cut), the OLIU circuit pack will switch to holdover mode. The OLIU will normally switch back to the line timing mode when a reference is no longer corrupted, but it can be provisioned to require a manual switch.

Manual Timing Pack Switch

This capability adds the ability to manually switch which Main OLIU is supplying timing to the shelf. In this way, the switch can be effected remotely. In addition, timing may be switched off of a Main OLIU prior to removing it for maintenance. Using this software switch creates a slightly smaller transmission hit. This feature also causes an “active-fn” OLIU pack equipment switch which will be reflected in the `rtrv-state-eqpt` report.

Subnetwork Configurations

Free Running/Line Timing

For initial SONET deployment with a DS1 low-speed interface, minimum first cost may be a primary concern. The free-running/line timing network can operate without an external clock source, so the expense of connecting to one is eliminated. This configuration may be useful for initial loop feeder and customer location applications, and it also meets the needs of an end-office trunk facility. This configuration should not be used to provide OC-N timing distribution or where SONET interconnections to other SONET subnetworks are needed. The local DDM-2000 host times its transmitted signals at the low- and high-speed interfaces from the internal ±15 ppm oscillator. The DDM-2000 FiberReach Multiplexer connected to the host recovers timing from the incoming OC-N signal and uses this timing for its transmitted signals.

Because the free-running/line timed DDM-2000 network is asynchronous to the DS1 services carried over it, additional jitter will be experienced on the demultiplexed DS1s. Certain interconnected equipment may be sensitive to such jitter, and this configuration should not be used in cases where it would cause a problem for that equipment. In particular, downstream equipment containing Stratum 3 or better clocks could be sensitive to this jitter.

Figure 5-3 shows a DDM-2000 FiberReach Multiplexer ring application. The intermediate nodes in this subnetwork perform line timing, whereby both transmitted OC-N lines are timed from an incoming OC-N. In the ring topology, synchronization messaging allows automatic synchronization reconfiguration in the event of a fiber or equipment failure. In this figure, the host DDM-2000 OC-3 Multiplexer or *SLC*-2000 ARM shelf is free-running, and the DDM-2000 FiberReach wideband shelves are line-timed.

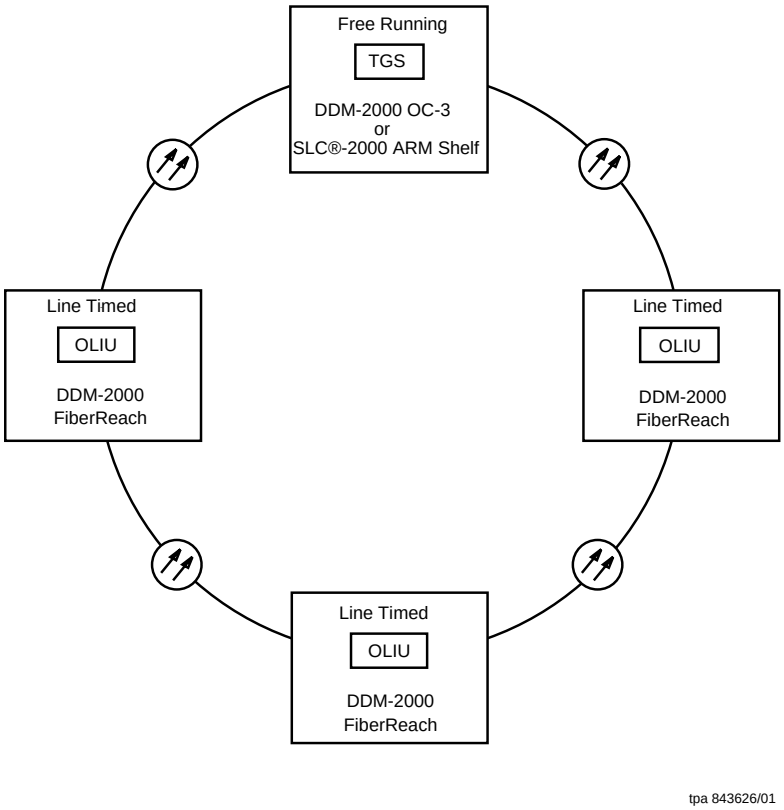

Figure 5-3. Free Running/Line Timing Synchronization in a Ring Configuration

External Timing/Line Timing Configuration

The external timing/line timing configuration (shown in Figure 5-4) integrates loop feeder and customer location networks into the digital synchronization network as required by the SONET standard. This application is ideal for networks where only one location has a building integrated timing supply (BITS); for example, a loop feeder. The network is synchronized to a local central office clock via DS1 references. The local office clock should be Stratum 3 or better, with timing traceable to a primary reference source. The local DDM-2000 multiplexer times its transmitted signals at the low- and high-speed interfaces from the internal oscillator that is locked on the external reference. The remote DDM-2000 FiberReach Multiplexer recovers timing from the incoming OC-N signal and unidirectional timing path and uses this timing for its transmitted signals.

External timing is required when EC-1 low-speed interfaces are used to interconnect the local DDM-2000 with other SONET equipment. Thus, the external timing/line timing configuration should be the long-term goal for all loop feeder and customer applications.

This timing configuration is also recommended for multispan topologies. Line timing can be extended to many DDM-2000 sites without any degradation of timing quality. In the ring topology, synchronization messaging allows automatic synchronization reconfiguration in the event of a fiber or equipment failure.

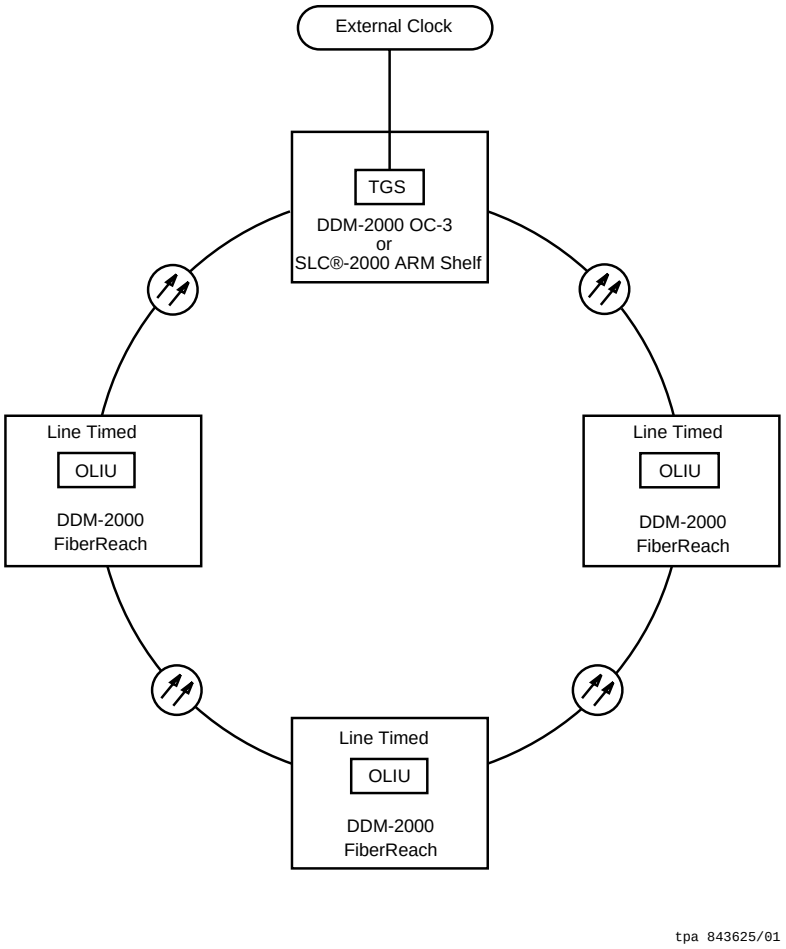

Figure 5-4. External Timing in a Ring Configuration

Line Timing/Line Timing Configuration

The line timing/line timing configuration (shown in Figure 5-5) provides an alternate timing arrangement that integrates loop feeder and customer location networks into the digital synchronization network as required by the SONET standard. This application is used when a synchronization source is not available locally to the DDM-2000 host. The network is synchronized to a remote clock via the SONET connection. The remote clock source should be traceable to a primary reference source that is Stratum 3 or better. The local DDM-2000 multiplexer times its transmitted signals at the low- and high-speed interfaces from the internal oscillator that is locked on the SONET connection. The remote DDM-2000 FiberReach Multiplexer recovers timing from the incoming OC-1 signal and unidirectional timing path and uses this timing for its transmitted signals.

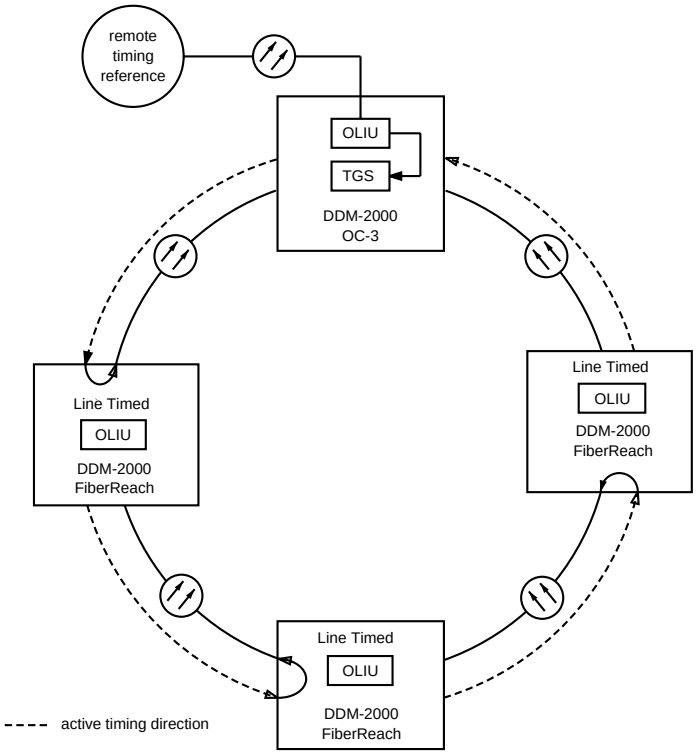

Figure 5-5. Line Timing in a Ring Configuration

Timing Distribution

In many applications, all elements in a SONET network are directly traceable to a single master clock via line-timing (for example, loop access networks, outside trunks, private networks). In this environment, the high-performance desynchronizer design of the DDM-2000 FiberReach Multiplexer allows a DS1 timing reference to be carried as a multiplexed DS1 payload to a customer premises. *It is recommended that, where possible, the DS1 sources (switch, PBX, or other equipment) be traceable to the same timing source used to time the DDM-2000 SONET network. Multiplexed DS1 reference transport is also consistent with current planning and administration methods. Applications include passing synchronization from the public switched network to a PBX-based private network (Figure 5-6). Network timing failures are identified by a DS1 alarm indication signal (AIS) and will cause selection of an alternate timing source.

* Synchronous operation via line timing eliminates the generation of VT pointer adjustments, thus maintaining the phase stability needed for a high-quality DS1 timing reference. Cross-connecting at the STS-1 level also eliminates the VT pointer adjustments. While the design of the DDM-2000 OC-3 Multiplexer maintains jitter/wander within standard DS1 interface requirements, even in the presence of VT pointer adjustments, and while the DS1 is likely to be stable enough for most equipment to use as a timing reference, some equipment may have more stringent stability requirements for its timing references.

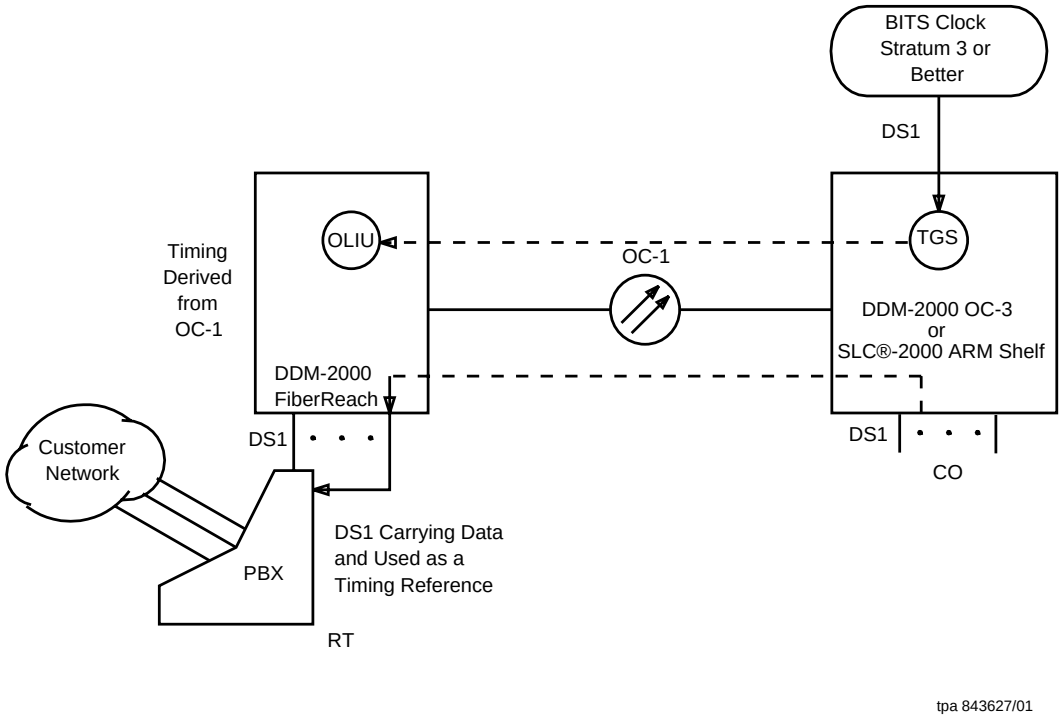

Figure 5-6. Timing from a Multiplexed DS1

Synchronization Messaging

The DDM-2000 FiberReach Multiplexers provide a synchronization messaging feature to ensure the integrity of network synchronization during both normal and abnormal conditions. With synchronization messaging, the current quality of the timing source can be conveyed from one DDM-2000 FiberReach Multiplexer to the next. This capability allows the DDM-2000 FiberReach Multiplexers to automatically change their timing reference in order to always maintain the highest quality timing available.

Applications

The applications that are currently supported with the synchronization messaging feature can be divided into two categories:

1. Automatic synchronization reconfiguration
2. Synchronization provisioning integrity.

Automatic Synchronization Reconfiguration

SONET was designed to operate optimally in a synchronous environment. Although plesiosynchronous and asynchronous operation can be supported by pointer adjustments, transmission quality is affected by the generation of additional jitter and wander due to pointer adjustments. Because of this, it is desirable to maintain synchronous operation whenever possible. With synchronization messages, the quality of the different timing references can be made available at each DDM-2000 FiberReach Multiplexer. The DDM-2000 FiberReach Multiplexer shelf can always determine the best timing reference available to it and switch to that reference. Through this mechanism, the synchronous operation of the subnetwork can be maintained. The switching of timing references is hitless, and the synchronization messages also allow it to be done without creating timing loops in the process.

Consider the access ring network in Figure 5-7. Under normal operation, the ring has one DDM-2000 Multiplexer externally timed and the other FiberReach Multiplexers line-timed in the counterclockwise direction. If a fiber failure occurs between the host DDM-2000 and the DDM-2000 FiberReach Multiplexers, the synchronization auto-reconfiguration feature will cause the DDM-2000 FiberReach Multiplexers to change their line timing directions to clockwise. The result is that the ring is again operating synchronously. The ring already provides self-healing of the traffic; so it is especially important to maintain synchronous operation during this type of failure to prevent service degradation due to increased jitter and wander.

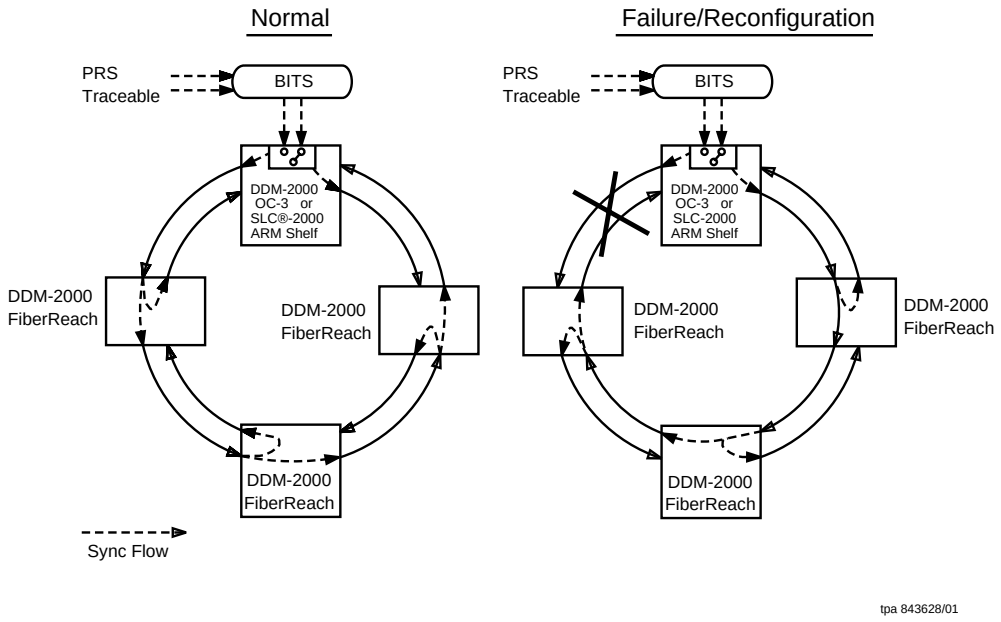

Figure 5-7. Synchronization Failure and Reconfiguration

Synchronization Provisioning Integrity

A welcome byproduct of synchronization messaging is the prevention of provisioning errors. Provisioned timing loops on the DDM-2000 FiberReach Multiplexers will be quickly detected through the synchronization messaging algorithm and prevented by forcing a shelf into holdover. The system can then be reprovisioned correctly.

Feature Details and Options

As mentioned previously, SONET synchronization messaging is used to communicate the quality of the subnetwork timing throughout the subnetwork. This is done using bits 1 through 3 of the K2 byte found in the SONET overhead. If a DDM-2000 FiberReach system is deriving timing from a given OC-N interface and synchronization messaging is enabled on that interface (Kbyte messages are enabled using the **`set-ocn`** user interface command or **`ent-rr`** TL1 command), the system interprets the received message to determine its internal timing status. The DDM-2000 FiberReach system also transmits over the particular OC-N

interface, and all other OC-N interfaces that are enabled for synchronization messaging, the appropriate message indicating the quality of its timing and its active timing mode. Table 5-1 lists the associated internal timing status that is associated with synchronization messages received from the OC-N interface when synchronization messaging is enabled. The table lists the messages from low to high quality.

Table 5-1. Synchronization Messages Using K2 Byte

Received Message	Active Timing Mode
Don't Use	Holdover
Timing Looped Back (TLB)	Holdover
Stratum 4*	Holdover
Internal Clock (IC)	OK to use
Stratum 3*	OK to use
Stratum 2*	OK to use
Sync Quality Unknown (SQU)	OK to use
Stratum 1*	OK to use

* Presently, DDM Multiplexers cannot generate these messages, but they could be transmitted and supported for auto-reconfiguration if any of these are received by DDM-2000 Multiplexer.

The "Don't Use" message is sent when the system determines that its timing is not suitable for synchronization, for example, due to failure.

When the DDM-2000 FiberReach system is in holdover mode, the Internal Clock message will be sent on all OC-N interfaces.

When the DDM-2000 FiberReach system is configured for line timing, the Timing Looped Back message will be sent on the OC-N interfaces toward the network element from which the timing is being derived. The message received on the OC-N interface will be sent on all other OC-N interfaces where synchronization messaging is enabled.

With automatic synchronization reconfiguration, the DDM-2000 FiberReach Multiplexer systems use and compare the incoming synchronization messages on the OC-1 interfaces available for line timing to select the highest quality synchronization reference available. If the received quality levels are the same on the references available for timing, the existing line timing reference takes precedence. This feature guarantees the nonrevertive operation of reconfiguration. The line timing reference is provisioned by the **`set-sync`** command.

The existence of automatic synchronization reconfiguration does not change the system's behavior on traditional line failures; for example, loss of frame (LOF), loss of pointer (LOP), loss of signal (LOS), and others.

Examples

In this section, some detailed examples are given to show specifically how the synchronization messages propagate through the DDM-2000 FiberReach network and assist in the recovery from a fiber failure. Through these examples, one can extend the same concept to any other network that may include different topologies, number of sites, failure locations, and number of BITS clocks.

Table 5-2. Synchronization Messages using S1 Byte*

Received Message	Active Timing Mode†
Don't Use	Holdover
Traceable SONET Clock	OK to use
Traceable Stratum 3‡	OK to use
Traceable Stratum 2‡	OK to use
Sync Trace Unknown	OK to use
PRS Traceable‡	OK to use

* This table is applicable when a 28-type or 29-type OLIU is in the Main slot.

† This column applies only when provisioned for line timing mode.

‡ Presently, DDM-2000 FiberReach Multiplexers cannot generate these messages, but they could be transmitted and supported for auto-reconfiguration if any of these are received by DDM-2000 FiberReach Multiplexer.

Synchronization messaging using the SONET K2 byte and S1 byte can be disabled on a per OC-N interface using the **`set-ocn`** command. (See Table 5-2.) Zeros will be transmitted on bits 1-3 of the K2 byte if this is done; all ones will be transmitted on bits 5-8 of the S1 byte if this is done. The timing and synchronization status of a shelf can be determined using the **`rtrv-sync`** command.

Synchronization Reconfiguration in an Access Ring

Figure 5-8a shows the access ring operating in its normal configuration. The DDM-2000 Multiplexer at the central office (CO) is externally timed, and each of

the other DDM-2000 FiberReach Multiplexers are line-timed in a counterclockwise direction. The sync quality unknown (SQU) message is sent to indicate where timing is traceable to an external BITS and where it is valid to be used. The timing looped back (TLB) message is sent on the interface that is being used as the line timing reference and, thus, where using that timing would create a timing loop. Synchronization messaging and automatic synchronization have both been enabled for this network.

In Figure 5-8b, a fiber has been cut between sites A and B. Immediately, the DDM-2000 FiberReach Multiplexer at site B enters holdover and sends out the internal clock (IC) message to site C. The DDM-2000 FiberReach Multiplexer at site B cannot switch to line time from site C because it is receiving the TLB message on that interface.

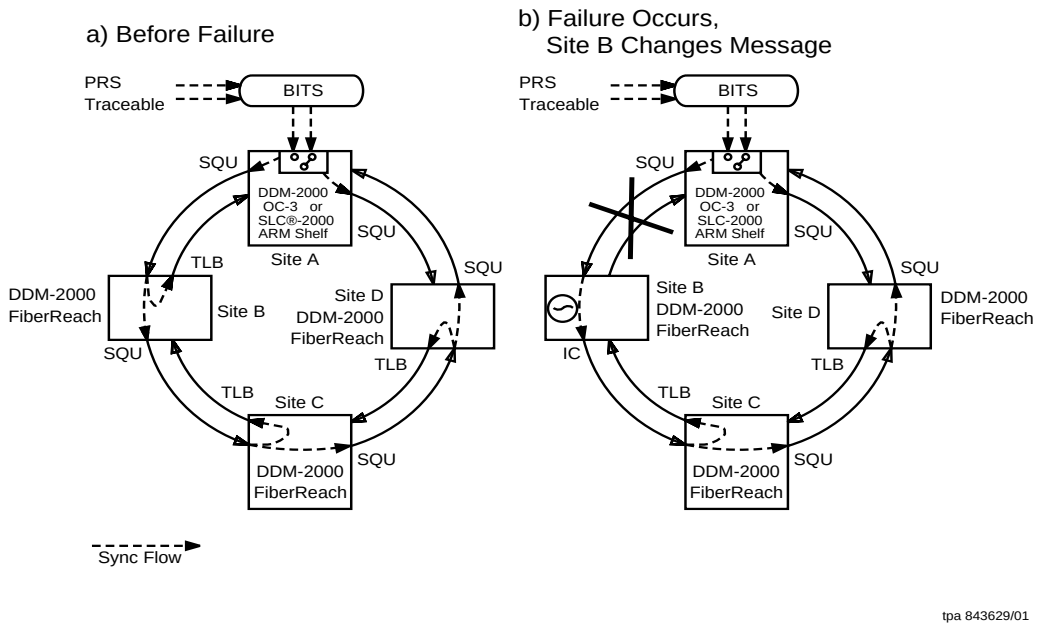

Figure 5-8. Synchronization Reconfiguration — Access Ring (Sheet 1 of 3)

In Figure 5-8c, the DDM-2000 FiberReach Multiplexer at site C detects the incoming IC message and sends out the IC message to site D. The DDM-2000 FiberReach Multiplexer at site C cannot switch to line time from the other rotation because it is receiving the TLB message on that interface.

In Figure 5-8d, the DDM-2000 FiberReach Multiplexer at site D detects the incoming IC message. Because this DDM-2000 FiberReach Multiplexer is receiving the SQU message from site A, it will switch to line time from site A because SQU is higher quality than IC. After the switch occurs, the TLB message is sent back to site A and the SQU message is retransmitted to site C.

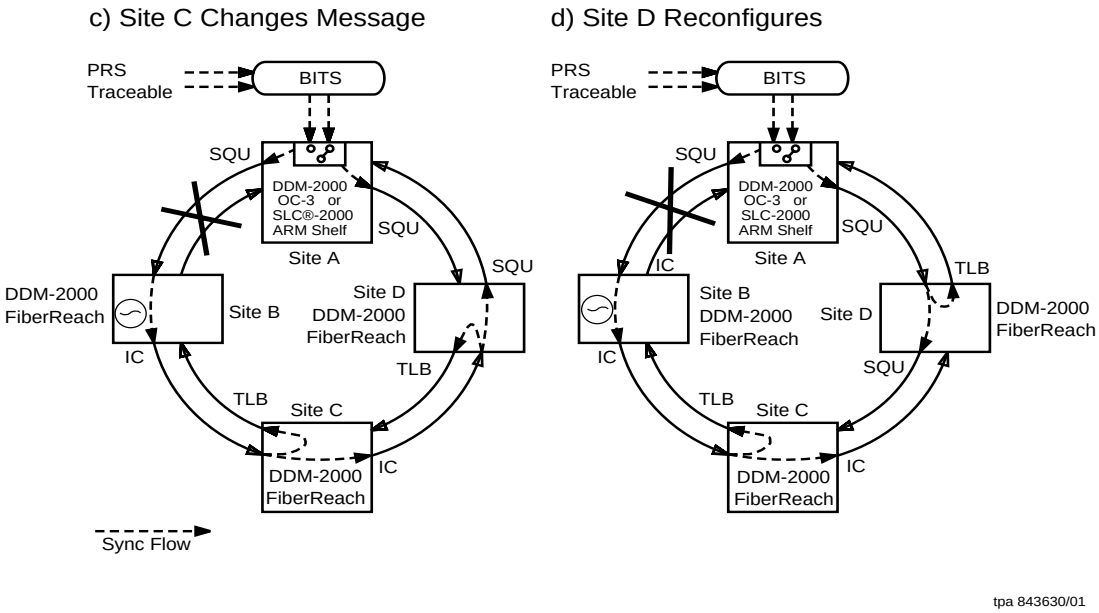

Figure 5-8. Synchronization Reconfiguration — Access Ring (Sheet 2 of 3)

In Figure 5-8e, the DDM-2000 FiberReach Multiplexer at site C detects the incoming SQU message from site D. The SQU message is a better quality message than the IC message being received from site B, so the DDM-2000 FiberReach Multiplexer at site C switches to line time from site D. After the switch occurs, the TLB message is sent back to site D, and the SQU message is retransmitted to site B.

In Figure 5-8f, the DDM-2000 FiberReach Multiplexer at site B detects the incoming SQU message from site C. The SQU message is a better quality message than the internal holdover capability, so the DDM-2000 FiberReach Multiplexer at site B switches to line time from site C. After the switch occurs, the TLB message is sent back to site C, and the SQU message is forwarded to site A. When the failure clears, the synchronization remains in the new configuration unless it is manually switched back.

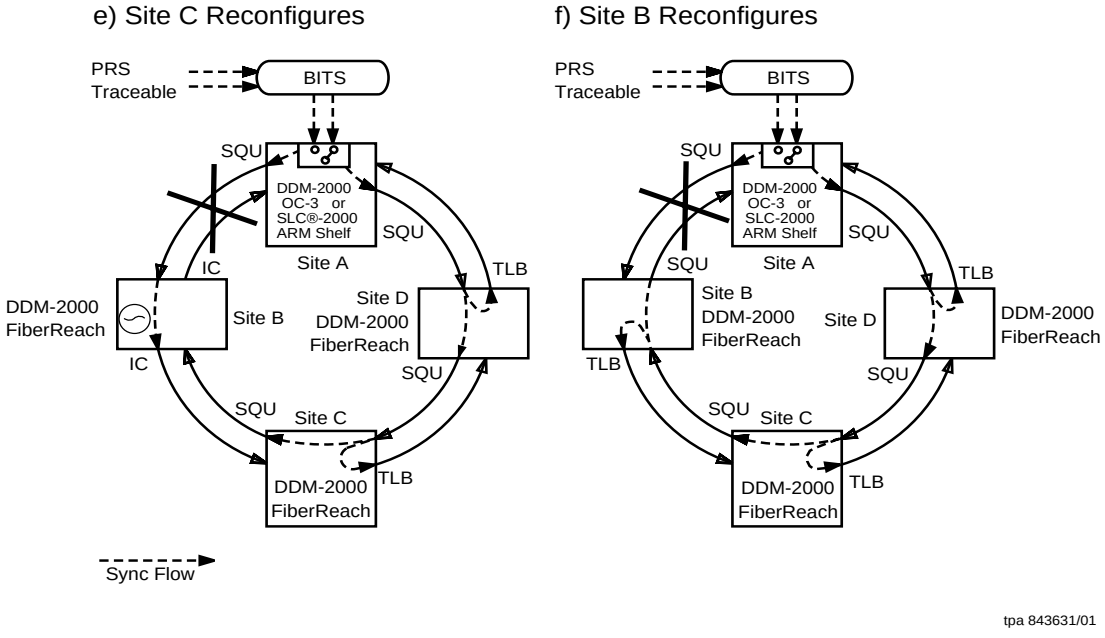

Figure 5-8. Synchronization Reconfiguration — Access Ring (Sheet 3 of 3)

Operations Interfaces

6

Contents

Overview 6-1

Craft Interface Terminals (CIT) 6-2

- CIT Access 6-2
- Using a PC as a CIT 6-6
- Remote Access Using the DCC 6-6
- CPro Graphical User Interface and Provisioning Tool 6-7

User Panel 6-8

- User Panel LEDs 6-10
- FE SEL Pushbutton 6-10
- ACO/TST Pushbutton 6-11
- UPD/INIT Pushbutton 6-11
- Pushbutton Combinations 6-12

Equipment Indicators 6-12

- FAULT Indicators 6-12
- ACTIVE Indicators 6-13

Office Alarms 6-13

TL1/X.25 Interface 6-14

- ITM SNC 6-15

User-Definable Miscellaneous Discretes—Environmental Alarms and Controls 6-16

Contents

Operations Interfaces

6

Overview

This chapter presents the operations interfaces that enable local and remote access to the DDM-2000 FiberReach Multiplexer Wideband shelf for its management.

NOTE:
For the DDM-2000 FiberReach Multiplexer Narrowband shelf, all operations are through the *SLC*-2000.

Operations interfaces include:

- EIA-232-D craft interface terminal (CIT) interface
- User panel controls and indicators
- Equipment status indicators
- Office alarms
- TL1/X.25 interface (via the host system) to an alarm surveillance OS such as Telcordia Technologies' Network Monitoring and Analysis (NMA) and Operations Systems/Intelligent Network Elements (OPS/INE), and Lucent Technologies ITM SNC (Integrated Transport Management SubNetwork Controller)
- User definable miscellaneous discrete environmental alarms and controls.

Complete detailed information on the OS interfaces is provided in 824-102-151, Lucent Technologies *DDM-2000 Multiplexers Operations Systems Engineering Guide*.

Additional information about the OI features in multi-vendor subnetworks is provided in 824-102-144, Lucent Technologies *2000 Product Family Multi-Vendor Operations Interworking Guide*.

Craft Interface Terminals (CIT)

The DDM-2000 FiberReach Multiplexer supports a user friendly text-based interface called the craft interface. A simple industry standard VT-100 computer terminal or a personal computer (PC) or a computer emulating a VT-100 computer terminal is all that is needed for the craft interface. The computer terminal or the PC may be connected to the DDM-2000 FiberReach Multiplexer either via the front CIT port or to the front or rear CIT of another DDM-2000 in the same subnetwork. In the latter case, the SONET data communications channel (DCC) will also serve as the connection between the computer terminal and the target DDM-2000 FiberReach Multiplexer. These access mechanisms are explained further in the following sections.

CIT Access

Figure 6-1 shows the system has one EIA-232-D compatible interface for a CIT. The front access interface is configured as data communications equipment (DCE) for direct CIT access (CIT 1). The front access port is configured as a data circuit terminating equipment (DCE) for direct terminal access. The front CIT port provides data rates of 300, 1200, 2400, 4800, 9600, and 19200 baud. Figure 6-2 shows how a null modem and a modem can be connected to the CIT interface. The data rate of the DDM-2000 FiberReach Multiplexer is automatically set to match the data rate of the terminal (autobaud).

For the Wall DT, the front cover must be open to connect the modem.

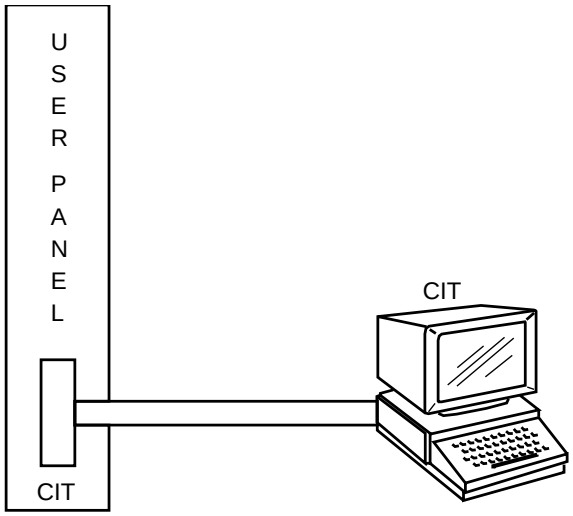

Figure 6-1. CIT Connectors (Direct Interface to CIT)

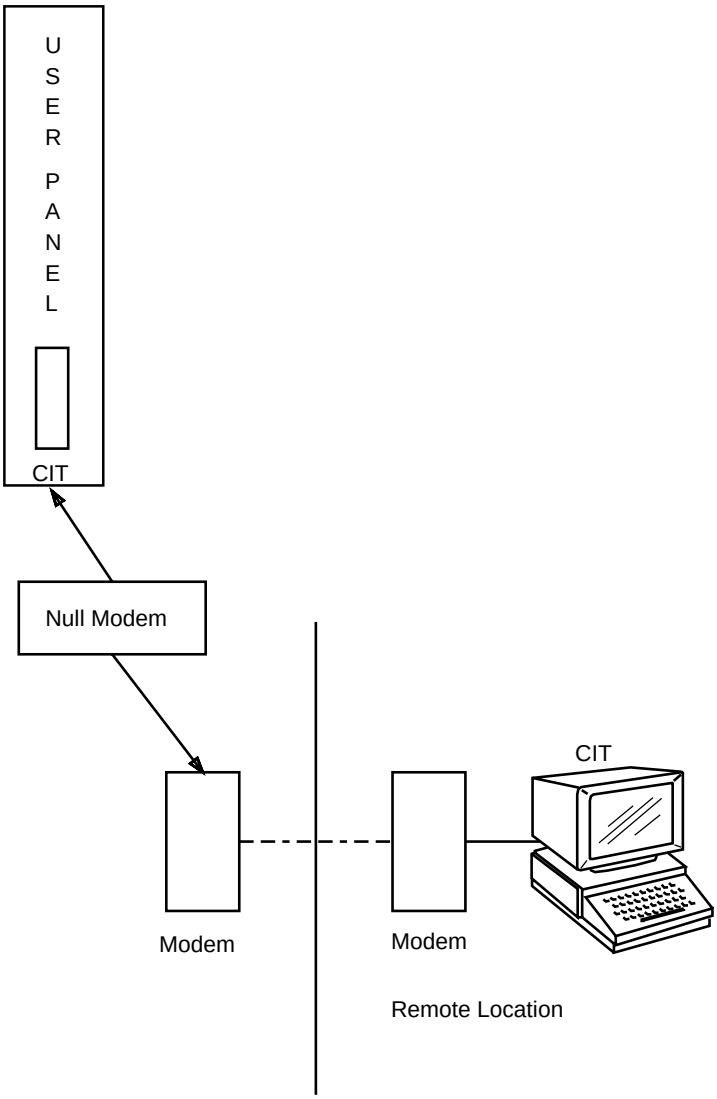

Figure 6-2. CIT Connectors (Modem Interface to CIT)

The terminal sessions over the CIT port and over the DCC are independent of one another. Two simultaneous login sessions (one CIT and one DCC) can be supported at any given time. See Figure 6-3.

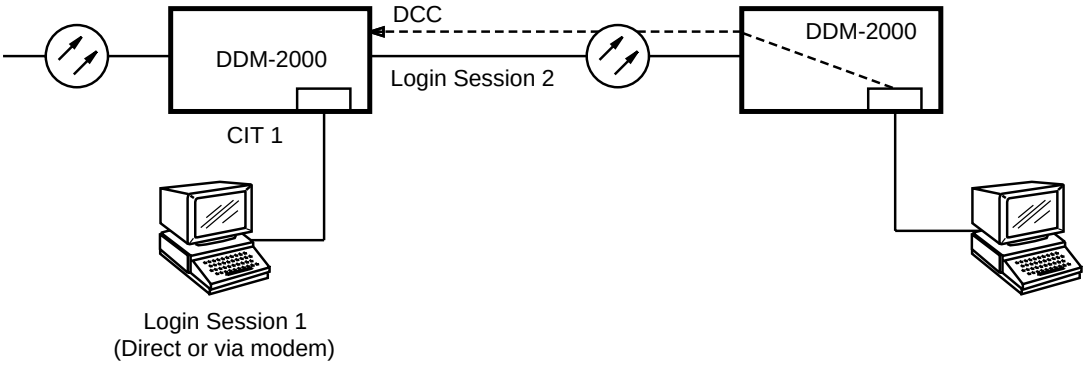

Figure 6-3. CIT Login Sessions

The DDM-2000 FiberReach CIT interface is based on the Telcordia Technologies TL1 language and provides prompt and command modes of operation. On-line context sensitive help is always available to help the technician through command execution. The output messages and reports are presented in easy-to-read sentences and tables. The following functions are provided via the CIT interfaces for the local and remote DDM-2000 FiberReach Multiplexer shelves:

- Loopbacks and testing
- Protection switching
- Performance monitoring
- Provisioning
- Fault management
- Software downloading
- Security management.

Detailed specifications of the CIT interface are provided in Chapter 10, "Technical Specifications."

Using a PC as a CIT

In addition to CIT functions, a PC is required for software downloads and facilitates software program updates. Any *MS-DOS*[*]PC can be used to emulate a traditional CIT through a variety of low-cost terminal emulator software packages; thus, an *MS-DOS* PC can serve DDM-2000 FiberReach Multiplexer needs very efficiently. In addition, the DDM-2000 FiberReach Multiplexer user interface can be accessed from within *MS-Windows** (Version 3.0 or later) on an *MS-DOS* PC.

The DDM-2000 FiberReach Multiplexer uses flash erasable program memory (EPROM) devices that can be upgraded through direct download from an *MS-DOS* PC. Upgrades are made available through the distribution of floppy disks compatible with the recommended PCs.

NOTE:
The DDM-2000 FiberReach Multiplexer CIT interface supports data rates up to 19,200 baud but does not provide flow control. Some terminals and PCs when set for higher data rates will not work properly at these rates with equipment like the DDM-2000 FiberReach Multiplexer that does not provide flow control. The system may appear to stop working when reports or long prompts are displayed. If this happens, try setting the terminal to a lower data rate. The data rate of the DDM-2000 FiberReach Multiplexer is automatically set to match the data rate of the terminal (autobaud).

Remote Access Using the DCC

The DDM-2000 FiberReach supports CIT remote access from the local terminal to a remote DDM-2000 using the DCC. The DDM-2000 FiberReach supports one incoming remote login session and one outgoing login session over the DCC at a time. For example, a local user can gain remote access to a remote system in their same subnetwork at the same time as a remote user at another DDM-2000 in the subnetwork can gain remote access to the local system.

* MS-DOS is a registered trademark and Windows is a trademark of Microsoft Corporation.

CPro Graphical User Interface and Provisioning Tool

The CPro Graphical User Interface and Provisioning Tool is a *Microsoft** *Windows* based user interface that can optionally be used with the DDM-2000 FiberReach Multiplexer. The tool simplifies and mechanizes administration, maintenance, and provisioning operations. With the tool a user can:

- Display and control cross-connections at each NE in a ring and the entire ring
- Obtain and display graphical images of the ring configuration, equipment, and cross-connections
- Perform an analysis of the ring to detect provisioning errors
- Retrieve and store data about a selected NE
- Back up and restore all provisioning information.

In response to a user, the tool automatically compiles and sends all the necessary commands to perform a task. If the user is provisioning cross-connections, for example, the tool automatically prevents provisioning errors by comparing the new provisioning information with the ring inventory. For more information, see the on-line documentation provided with the tool or 365-576-160 (*CPro-2000 User Manual*, Release 10.0.) See Chapter 10, "Technical Specifications," for PC requirements to use the tool.

* Microsoft is a registered trademark of Microsoft Corporation.

User Panel

The user panel, shown in Figure 6-4, provides system-level information and control functions, while the ACTIVE and FAULT LED on each faceplate provide circuit pack level information. These features allow many operations tasks (for example, fault isolation or circuit pack replacement) to be performed when a CIT or external test equipment is not available.

The user panel is a circuit pack mounted on the right side of the shelf. Additional LEDs and controls are mounted on the SYSCTL faceplate to support basic operations, administration, and maintenance functions without a CIT.

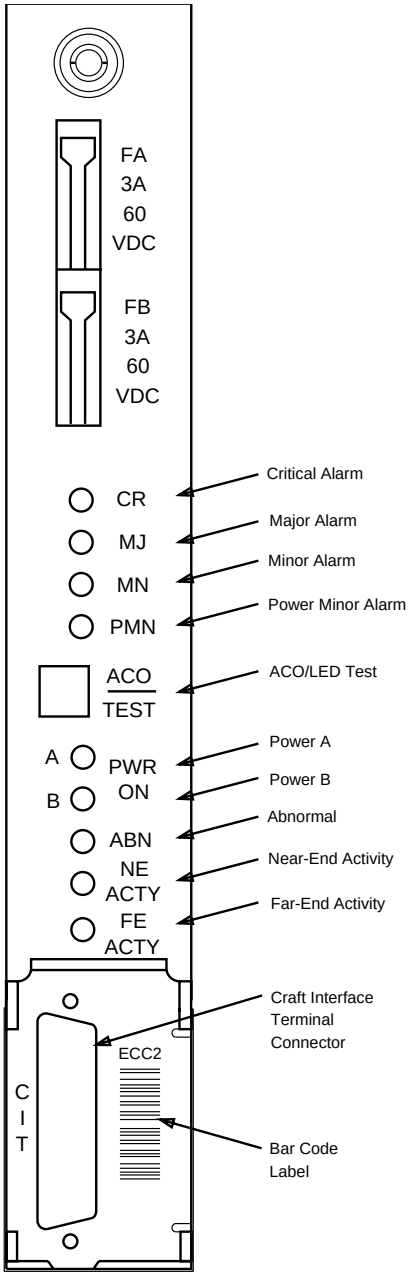

Figure 6-4. FiberReach Multiplexer User Panel

User Panel LEDs

The user panel LEDs show a composite of all alarms and status conditions in the local shelf. The composite is defined as follows:

- The highest level alarm LED (CR, MJ, PMN, or MN) of all alarms at the local shelf is lit. (At most, one alarm LED will be lit at any time.)
- The ABN LED is lit if an abnormal condition exists on this shelf.
- The ACO LED is lit if the alarm cutoff function is active on this shelf.
- Each PWR ON LED is lit if the local shelf is receiving –48 V power from its power feeders.
- The NE ACTY LED is lit if any alarm, ABN, or "activity" condition exists on this shelf.

When this composite information is being displayed on the user panel, the 7-segment FE ID is blank.

FE SEL Pushbutton

In previous DDM-2000 FiberReach releases the FE SEL pushbutton allowed technicians to see far-end DDM-2000 conditions from the local shelf. Starting with FiberReach Release 3.0 and all later FiberReach TARP releases, when the FE SEL pushbutton is pushed for the first time, the FE ID display shows "L" and the user panel LEDs show the conditions of the local shelf only.

Each time the FE SEL pushbutton is pushed again within 15 seconds, the FE ID display will show the local shelf address (with the decimal point), and the user panel LEDs will show a composite of the alarm and status condition of that same shelf.

ACO/TST Pushbutton

The ACO/TST pushbutton tests all the LEDs on the shelf. All LEDs on the shelf will be lit while the pushbutton is pressed. If the ACO pushbutton is pressed and held for more than 2 seconds, the three digits of the software release number are displayed in the 7-segment FE ID display. If there are any active alarms when the ACO pushbutton is pressed, the audible office alarms will be silenced and the ACO LED (part of the pushbutton) on the user panel will be lit.

UPD/INIT Pushbutton

This pushbutton, located on the SYSCTL, is used to initialize a controller when it is first installed in a shelf, to update the system's internal equipment inventory when signals or equipment are removed from the shelf and when circuit pack options are changed. The system automatically detects new equipment or signals added to the shelf. In these cases, it is not necessary to push the UPD/INIT pushbutton.

The user panel LEDs default to show local system information. The highest active alarm level is shown by the red LEDs for CR and MJ alarms; yellow LEDs are shown for MN and power minor (PMN) alarms. A green ACO button/LED is used to activate the alarm cutoff function. When activated, the LED is on. The green ACO button also initiates an LED test when the button is depressed and held. A green PWR ON (PWR ON A and PWR ON B for G4 shelf user panels) LED shows that the power is on and the terminal is receiving a –48 V source. Two yellow status LEDs show abnormal (ABN) conditions and near-end activity. The yellow ABN LED is lighted when a temporary condition, potentially affecting transmission, exists; for example, a manual protection switch or lockout, loopback, or system test in progress.

The UPDATE/INITIALIZE button addresses the local system and is located on the SYSCTL circuit pack. The recessed UPDATE/INITIALIZE button serves several functions during installation and circuit pack replacement. During the first 10 seconds after powering up the SYSCTL circuit pack, depressing this button initializes the nonvolatile memory with provisioning and state information. Secondly, after removing a circuit pack or low-speed input, depressing this button updates the system equipment list to show the slot or signal is now unequipped. Finally, a series of automatic turnup tests are initiated when the UPDATE/ INITIALIZE and ACO buttons are depressed in a specific sequence.

Pushbutton Combinations

The three pushbuttons described previously are used in combinations to perform seven functions. Figure 6-1 lists the functions. These functions are used as part of the procedures described in the TOP section of this manual.

Table 6-1. DDM-2000 FiberReach Pushbutton Combinations

Function	Pushbutton		
	ACO/TST	UPD/INIT	FE SEL
1. Update		Press	
2. SYSCTL Initialization *		Press	
3. Remove SYSCTL †	Press		Press
4. Software version	Hold		
5. LED test	Hold		
6. Alarm cutoff	Press		
7. Software download †		Hold	*

* Used after a SYSCTL is replaced. Press pushbutton during the 10-second interval that the CR LED on the user panel is flashing.

† See TOP section of this manual (Volume II) for detailed procedures.

Equipment Indicators

FAULT Indicators

Red FAULT indicators are provided on all circuit packs. The circuit pack FAULT indicator is illuminated whenever a failure has been isolated to that pack.

Common failures (for example, power, synchronization, control, etc.) do not cause the FAULT indicators on all circuit packs affected by the failure to be illuminated; only the FAULT indicator on the failed pack is illuminated.

FAULT indicators on high- and low-speed transmission interface packs are flashed when a failure of the incoming signal is detected. For example, loss of signal, loss of frame, loss of pointer, or crossing of the signal fail or signal degrade threshold.

The FAULT LED on the SYSCTL flashes when a failure of the DCC from a far-end shelf is detected.

ACTIVE Indicators

A green ACTIVE indicator is provided on each OLIU circuit pack. It indicates which circuit packs are active (carrying service) at any given time. Since both OLIUs are active in a ring configuration, both ACTIVE indicators will always be illuminated.

Although there is no ACTIVE LED on each low-speed circuit pack to indicate it is carrying service, the status of the circuit packs can normally be deduced without the CIT. If a service DS1 circuit pack FAULT LED is illuminated and the DS1 protection circuit pack FAULT LED is not illuminated, then the protection circuit pack is carrying service and the failed circuit pack can be removed. The exception to this rule is if a manual protection switch has been executed. In this case, the ABN LED on the user panel will be illuminated and the user will have to use a CIT to check the status of the system.

Office Alarms

The DDM-2000 FiberReach Multiplexer provides relay contacts for wiring to the office audible and visual alarms. The following contacts are provided for each alarm condition:

- CR (critical)
- MJ (major)
- MN (minor).

The MJ and CR contact closures are designed to allow these office alarms to be ORed together and reported as an office MJ alarm.

The CR alarms are fail-safed against power failures. They are activated even if the shelf loses both power feeders.

The audible office alarms for a given site are silenced through activation of the ACO function. Visual alarms are not extinguished by the ACO function.

An alarm hold-off delay is provided, to prevent transient failures from causing unnecessary maintenance activity. The office alarms will not be activated unless a condition of greater duration than the alarm hold-off delay occurs. When a failure clears, an alarm clear delay prevents premature clearing of the alarm.

As with the user panel indicators, when multiple alarms are active, the highest level office alarm (audible and visual) is activated. When the highest level alarm clears, the office alarm "bumps down" to the next highest level active alarm.

If the ACO function has been activated to silence all active audible alarms, then when a "bump down" occurs the audible alarms remain silent. (That is, the lower level visual alarm is activated, but the corresponding audible alarm is not re-activated.) If another alarm occurs while the ACO is active, the highest level audible alarm is activated even if the new alarm is a lower level condition. (For example, if a MJ and MN alarm were active and silenced via the ACO and another MN alarm occurred, the MJ audible alarm would sound.)

TL1/X.25 Interface

NOTE:
The FiberReach wideband shelf does not provide a direct X.25 interface. Access to the X.25 port on a gateway NE is via the DCC.

The DDM-2000 FiberReach Multiplexer supports a TL1 interface via its host DDM-2000 over the DCC on the OC-1 interface to control and report alarm and status conditions and PM data to an alarm surveillance OS such as Telcordia Technologies' NMA operations or Lucent Technologies ITM SNC. The TL1 interface of the DDM-2000 FiberReach Multiplexer provides detailed information such as identifying specific circuit packs and facilities.

The DDM-2000 FiberReach Multiplexer supports remote and automated provisioning from a provisioning OS such as Telcordia Technologies' OPS/INE or Lucent Technologies ITN SNC. (FiberReach Release 4.0 is supported by TEMS.) The DDM-2000 FiberReach Multiplexer also provides enhanced security.

The TL1 maintenance messages of the DDM-2000 FiberReach Multiplexer are based on Telcordia Technologies' TR-NWT-000833, Issue 3, Rev. 1, Issue 4, Supplement 1, and Issue 5, Rev. 1. The TL1 provisioning messages of the DDM-2000 FiberReach Multiplexer are based on Telcordia Technologies' TR-NWT-000199, Issue 2, and TA-NWT-000199, Issue 6, Supplement 1.

DDM-2000 or FT-2000 can serve as the TL1/X.25 GNE for DDM-2000 FiberReach TL1-RNE. ITM SNC or other-vendor NEs such as Tellabs TITAN may also be the TL1/X.25 GNE for DDM-2000 FiberReach TL1-RNE. DDM-2000 FiberReach cannot be a TL1/X.25 GNE itself.

The OS can use more than one NE as a GNE to provide redundancy and/or to distribute TL1 message volume across multiple X.25 links. The TL1/X.25 GNE serves as a single interface to the OS for the NEs in the same subnetwork. The TL1/X.25 GNE receives operations information from all the NEs through the DCC and reports this information, as well as its own information, to the OS. The operations information is in the form of TL1 messages. Through the GNE, the OS can send TL1 commands to any NE in the subnetwork. FT-2000 OC-48 Lightwave Systems can serve as the TL1/X.25 GNE for DDM-2000 NEs, but not vice versa

until DDM-2000 OC-3 Release 13.0 and later, and OC-12 Release 7.0. For DDM-2000 FiberReach 3.0 and later, Tellabs TITAN 5500/S R5.0 DCS, or other-vendor NEs that adhere to Telcordia Technologies GR-253, can be the TL1/X.25 GNE. DDM-2000 FiberReach can not be a TL1/X.25 GNE itself.

Autonomous and command/response messages are supported. Detailed information about the DDM-2000 OC-3 or OC-12 X.25 interface and detailed information about the input and output parameters for TL1 messages is provided in 824-102-151, *DDM-2000 Multiplexers Operations Systems Engineering Guide*.

ITM SNC

ITM SNC is an element management system (EMS) that supports SONET NEs such as the Lucent Technologies' DDM-2000, FT-2000, *SLC*®-2000, and the Fujitsu® Lightwave Multiplexer (FLM). ITM SNC provides fault, provisioning, configuration, and security management functions via a Graphical User Interface (GUI). Through these functions, ITM SNC is able to support TL1/X.25 communication multiplexing or concentration, to provide network security, and to record all database changes. ITM SNC also provides a cut-through capability, allowing the ITM SNC user to access an NE through its native (TL1) command set.

ITM SNC operates as an enhanced graphical tool and as a general configuration management aid. It provides NE, port, cross-connection, and path provisioning, as well as flow through from provisioning OSs to NEs. ITM SNC also provides fault management through subnetwork alarm and event pre-processing prior to sending fault information to a network surveillance system such as Bellcore's Network Monitoring and Analysis-Facility (NMA-F).

User-Definable Miscellaneous Discretes—Environmental Alarms and Controls

To allow monitoring and control of equipment collocated with a DDM-2000 FiberReach Multiplexer in a remote site, a set of user-definable miscellaneous discrete environmental alarms and controls is provided.

Twenty-one miscellaneous discrete alarm/status points are provided to monitor environmental conditions at remote terminal sites (open door, high temperature, etc.). The first 14 points and points 16 through 21 are activated by contact closures. The fifteenth point (External Minor) is for monitoring of remote structure power and fan apparatus (for example, DC power shelf failure); this point is activated by a –48 volt input.

Four control points are provided to control equipment (pumps, generators, etc.) at remote terminal sites. When activated, the control points provide a contact closure between the control point output and ground.

Miscellaneous discrete alarms/statuses and controls are transmitted between the remote DDM-2000 FiberReach Multiplexers and the DDM-2000 OC-3 Multiplexer host via the SONET section DCC. OS access to all miscellaneous discretes alarm/status points (1 through 21) is provided via TL1.

Figure 6-5 shows OS access to miscellaneous discretes through the DDM-2000 Multiplexer at the CO. Access to all miscellaneous discrete alarm/status points is also provided through the CIT. The state of the control points can be reported but not controlled through the CIT. Control points are activated by the TL1 command **OPR-EXT-CONT**.

The names and alarm levels of the 21 alarm/status points and the names of the 4 control points can be provisioned through the CIT in remote systems. Refer to the **set-attr-env, set-attr-cont, rtrv-attr-env,** and **rtrv-attr-cont** commands in Chapter 11, "Commands and Reports."

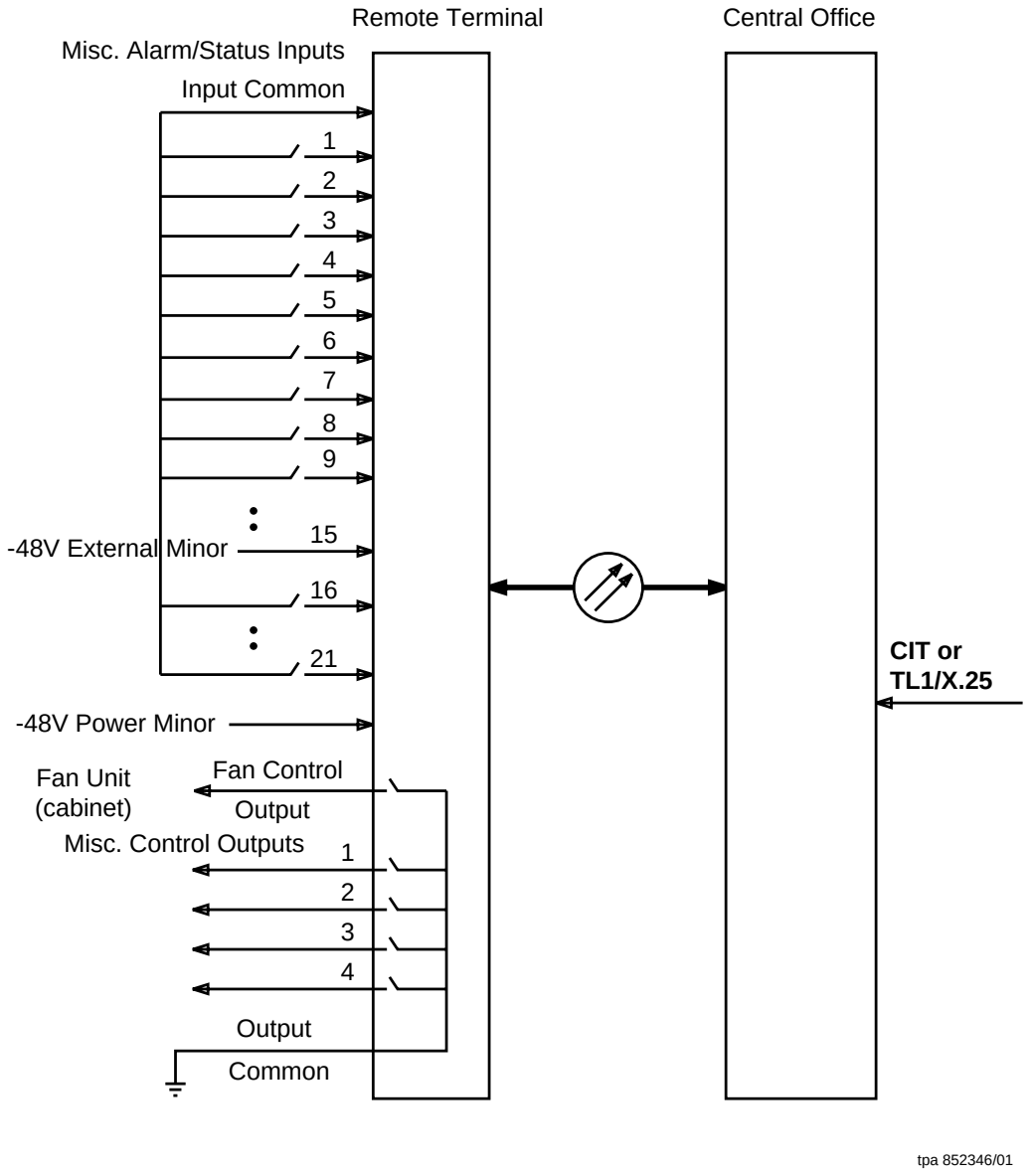

Figure 6-5. Miscellaneous Discretes

Circuit Pack Descriptions

7

Contents

Overview 7-1

Wideband Shelf - Introduction 7-1

Control Circuit Packs 7-2

- BBG8/BBG8B SYSCTL Circuit Pack Description 7-3
  - Purpose of Circuit 7-3
  - BBG8/BBG8B SYSCTL Faceplate Controls and Indicators 7-3
  - General Description of Operation 7-5
  - Detailed Description of Operation 7-5
  - BBG8/BBG8B SYSCTL Hardware Setting 7-8
  - BBG8/BBG8B SYSCTL Quick Reference Summary 7-9
- ECC2 User Panel Circuit Pack Description 7-11
  - Purpose of Circuit 7-11
  - Faceplate Controls and Indicators 7-11
  - Detailed Description of Operation 7-13

Wideband Shelf - Transmission Circuit Packs 7-15

- BBF1B DS1 Circuit Pack Description 7-15
  - Purpose of Circuit 7-15
  - DS1 Faceplate Indicator 7-15
  - General Description of Operation 7-16
  - Detailed Description of Operation 7-16
  - DS1 Hardware Settings 7-18
  - DS1 Quick Reference Summary 7-20
- BBF3/BBF3B DS1PM Circuit Pack Description 7-22

Contents

Purpose of Circuit 7-22
DS1PM Faceplate Indicator 7-22
General Description of Operation 7-23
Detailed Description of Operation 7-23
DS1PM Hardware Settings 7-26
DS1PM Quick Reference Summary 7-28
- 177A Retainer Card Description 7-29
  - Purpose of Card 7-29
- BBG4/BBG4B DS3 Circuit Pack Description 7-30
  - Purpose of Circuit 7-30
  - BBG4/BBG4B DS3 Faceplate Indicators 7-30
  - General Description of Operation 7-31
  - Detailed Description of Operation 7-31
  - BBG4/BBG4B DS3 Hardware Settings 7-35
  - BBG4/BBG4B DS3 Quick Reference Summary 7-36
- BBF6 T1 EXT Circuit Pack Description 7-38
  - Purpose of Circuit 7-38
  - T1EXT Faceplate Indicator 7-38
  - General Description of Operation 7-39
  - Detailed Description of Operation 7-39
  - T1EXT Hardware Settings 7-43
  - T1EXT Quick Reference Summary 7-45
- BBG19 DS3 Data Services Interface Circuit Pack Description 7-46
  - Purpose of Circuit 7-46
  - BBG19 DS3 Faceplate Indicators 7-46
  - General Description of Operation 7-47
  - Detailed Description of Operation 7-48
  - BBG19 DS3 Hardware Settings 7-51
  - BBG19 DS3 Quick Reference Summary 7-52
- BBF8 High Data-Rate Digital Subscriber Line (HDSL) 7-54
  - Purpose of Circuit 7-54
  - HDSL Faceplate Indicator 7-54
  - General Description of Operation 7-55

Contents

Detailed Description of Operation 7-56
HDSL Quick Reference Summary 7-61

Transmission - Optical Interface 7-62

- Universal Optical Connectors 7-62
  - Optical Interface Circuit Packs 7-64
- 22-Type OLIU Circuit Pack Descriptions 7-66
  - Purpose of Circuits 7-66
  - 22-Type Faceplate Indicators 7-66
  - General Description of Operation 7-70
  - Detailed Description of Operation 7-70
  - 22-Type OLIU Quick Reference Summary 7-73
- 26G2-U OLIU Circuit Pack Description 7-75
  - Purpose of Circuit 7-75
  - 26G2-U OLIU Faceplate Indicators 7-75
  - General Description of Operation 7-77
  - Detailed Description of Operation 7-78
  - 26G2-U OLIU Quick Reference Summary 7-81
- 28G-U/28G2-U OLIU Circuit Pack Description 7-82
  - Purpose of Circuit 7-82
  - 28G-U/28G2-U OLIU Faceplate Indicators 7-82
  - General Description of Operation 7-84
  - Detailed Description of Operation 7-85
  - 28G-U/28G2-U OLIU Quick Reference Summary 7-88
  - 29G-U/29H-U OLIU Circuit Pack Description (Long Reach OC-12 Interface) 7-89

Narrowband Shelf - Introduction 7-91

- Circuit Packs in the Narrowband Shelf 7-91
- RGU Circuit Pack Description 7-92
  - RGU Faceplate Controls and Indicators 7-92
- PCU Circuit Pack Description 7-92
  - PCU Faceplate Controls and Indicators 7-93
- CDTU Circuit Pack Description 7-93

Contents

CDTU Faceplate Controls and Indicators 7-94

- DSXBIU Circuit Pack Description 7-94

DSXBIU Faceplate Controls and Indicators 7-94

- Channel Units in the Narrowband Shelves 7-96

Channel Unit Circuit Pack Descriptions 7-96

Circuit Pack Descriptions

7

Overview

The first part of this chapter provides a detailed functional description of the DDM-2000 FiberReach Multiplexer circuit packs for the wideband shelf. The second part of this chapter provides a detailed functional description of the DDM-2000 FiberReach Multiplexer circuit packs for the narrowband shelf.

Wideband Shelf - Introduction

The circuit packs in the DDM-2000 FiberReach Multiplexer are divided into the following main categories:

- Control circuit packs
  - BBG8/BBG8B system controller (SYSCTL)
  - ECC2 user panel (USPNL)
- Transmission circuit packs
  - BBF1B DS1 low-speed interface (DS1)
  - BBF3/BBF3B DS1 performance monitoring (DS1PM)
  - BBG4/BBG4B DS3 low-speed interface (DS3)
  - BBF6 T1 extension
  - BBG19 DS3 data services interface
  - BBF8 high bit rate digital subscriber line (HDSL)

- Optical Interfaces
  - 22D-U OC-3 (IS-3) OLIU
  - 22F/22F-U/22F2-U OC-3 (Intermediate Reach) OLIU
  - 22G-U/22G2-U/22G3-U/22G4-U (OC-3 Long Reach) OLIU
  - 26G2-U OC-1 optical line interface unit (OLIU)
  - 28G-U/28G2-U OC-3 optical line interface unit (OLIU)
  - 29G-U 1310 OC-12 (nm Long Reach) OLIU
  - 29H-U 1550 OC-12 (nm Long Reach) OLIU

Control Circuit Packs

The DDM-2000 FiberReach Multiplexer uses one main control circuit pack for the SYSCTL. The user panel on DDM-2000 FiberReach provides the physical CIT interface and the alarm and status LEDs. The control system provides user interfaces to the system and controls, monitors, and reports the status of the signal transmission through the DDM-2000 FiberReach Multiplexer. All system features are implemented or supported through the control system. However, transmission is unaffected by control system failure. If a controller does fail, protection switches are not done. Therefore, if there is another circuit pack failure requiring a protection switch along with the controller failure, service may be affected depending on the function of the failed circuit pack. The control system continuously monitors the equipment to determine if a protection switch is necessary and to provide equipment performance information.

The control system in each DDM-2000 FiberReach in a subnetwork can communicate with the control system of other FiberReach NEs in that subnetwork via the SONET section data communications channel (DCC). This allows a user at one point in the subnetwork to control the shelves throughout the subnetwork.

BBG8/BBG8B SYSCTL Circuit Pack Description

Purpose of Circuit

The BBG8/BBG8B SYSCTL circuit pack is the system controller for the FiberReach Multiplexer. It has control over all shelf functions and provides all user interfaces into the system.

BBG8/BBG8B SYSCTL Faceplate Controls and Indicators

The BBG8 SYSCTL circuit pack faceplate controls and indicators are shown in Figure 7-1. The SYSCTL has a red FAULT LED and a 7-segment numeric LED display, as well as the FE SEL and UPD/INIT pushbuttons on its faceplate. The red FAULT LED lights on detection of a circuit pack failure. These controls and indicators are discussed in more detail under "User Panel" in Chapter 6, "Operations Interfaces."

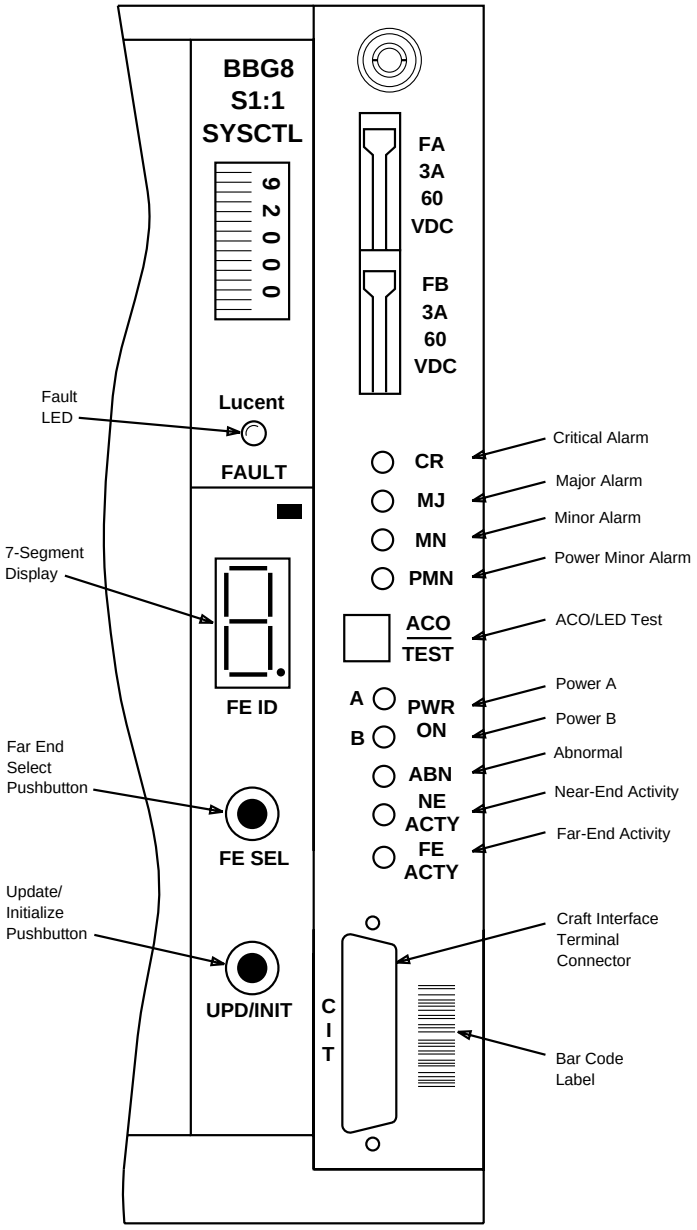

Figure 7-1. BBG8 SYSCTL Circuit Pack

General Description of Operation

The SYSCTL circuit pack provides the majority of the control functions on the shelf. These include circuit pack monitoring, performance monitoring, protection switching, and user interfaces.

The SYSCTL, which contains a microprocessor, controls links to all other circuit packs in the system and links to user interfaces. The processor also provides link access procedure (LAPD) and link access procedure packet data processing to support SONET section DCC.

Detailed Description of Operation

Control Circuitry

Processor. Figure 7-2 provides an overall block diagram of the SYSCTL circuit pack. This processor is the highest level processor in the system.

Memory

Program Flash-EPROM. The main program is stored in the flash-EPROM, which combines the nonvolatility of EPROM with the in-circuit reprogramming ability of electrically erasable programmable read-only memory (EEPROM). Electrically erasable programmable read-only memory (FEEPROM) allows in-service software upgrades to be performed locally or remotely without replacing the SYSCTL circuit pack. Program upgrades of remote systems can also be done via the DCC. Of course, software upgrades may also be accomplished by replacing circuit packs with packs that have already had software upgrades.

RAM. The main processor's random access memory (RAM) is used to store all volatile information such as system alarms, performance-monitoring information, and parameters for the main processor's operating system.

EEPROM. All nonvolatile parameters such as provisioning are stored in the EEPROM, which maintains its data indefinitely during a power loss.

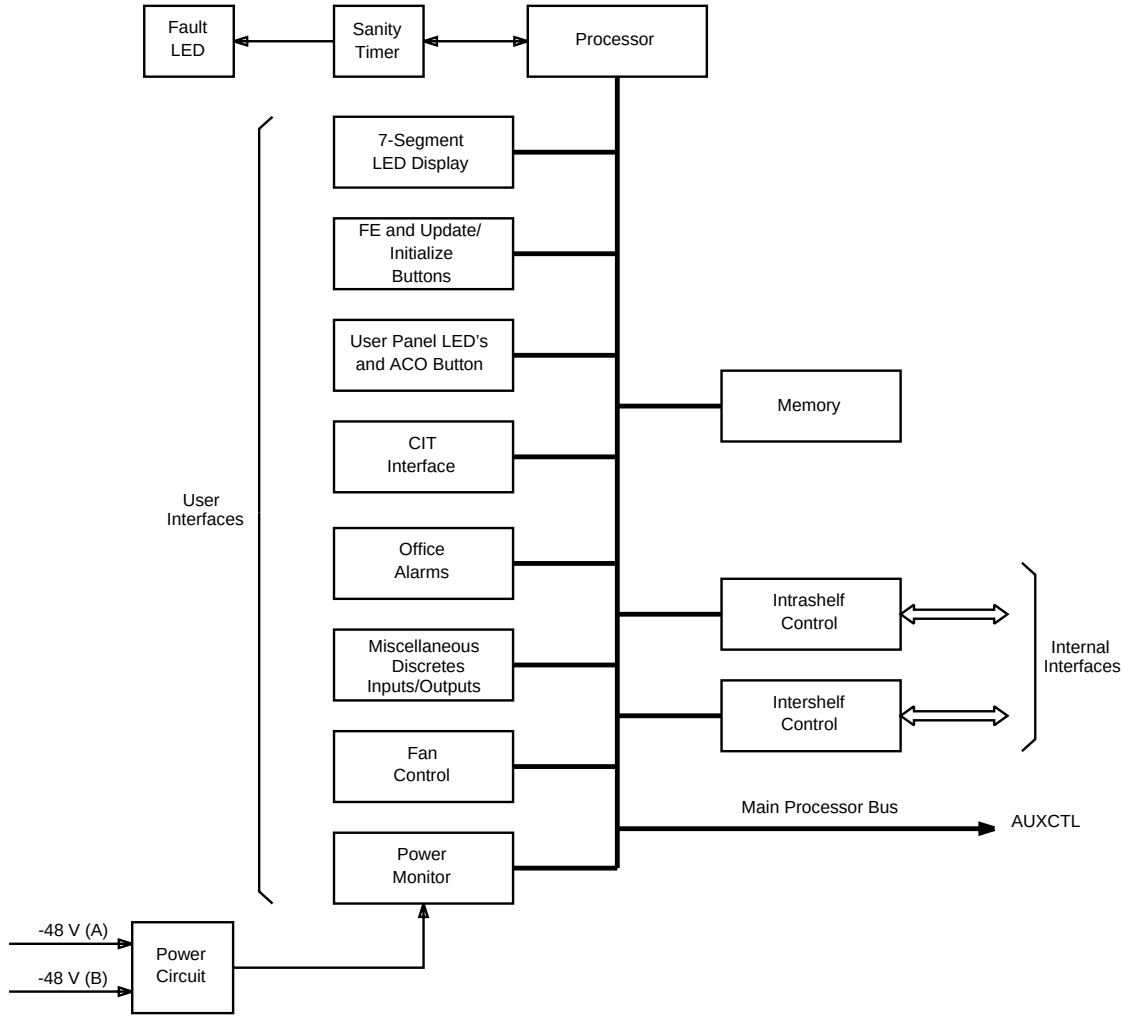

Figure 7-2. BBG8 SYSCTL Circuit Pack Block Diagram

Transmission/Timing Circuit Pack Interfaces

The main processor can read and write parameters on the transmission circuit packs through a custom serial interface called the intrashelf control bus. These circuit packs have a built-in serial link receiver which provides an address map into the device. Through this interface, the processor accesses the custom devices and circuit pack parameters, as well as a small EEPROM which stores each circuit pack's inventory information (*CLEI*[*] code, date of manufacture, etc.). Through this link, the main processor can also light the faceplate LEDs on the circuit packs.

Redundancy has been built into this bus to allow a pack to be switched out of service in the event of a failure within a circuit pack.

Operation Interfaces

The SYSCTL supports all of the operations interfaces described in Chapter 6, "Operations Interfaces."

OC-1 Transport Overhead Channel

The SYSCTL terminates an overhead channel from each Main slot in the shelf. The overhead channel terminates the 192 kb/s section DCC.

Power Monitoring and Fan Control

The SYSCTL monitors the two –48 volt feeders and generates an alarm if one fails. It also monitors AC power in a remote terminal application via a power minor alarm input closure and can control the external fan, based on an on-board temperature sensor. The system also monitors the fan control relay for contact failure.

If the voltage to the shelf drops below the safe operating voltage, the system will suspend normal operations and wait for safe operating voltage to return. This is referred to as "brownout protection." Assuming a sufficient voltage level, an "L" will be displayed on the SYSCTL. The BBG8/BBG8B operates in either integrated or isolated grounding (-48VRTN not connected to frame ground) architecture systems.

---

* COMMON LANGUAGE is a registered trademark and CLEI, CLLI, CLCI, and CLFI are trademarks of Telcordia Technologies.

Power Circuitry

The SYSCTL receives two sources of –48 volts which are diode ORed, fused, and filtered prior to conversion to a +5 volt source to power the rest of the circuit pack. A failure of the fuse or converter causes the red FAULT LED to light.

BBG8/BBG8B SYSCTL Hardware Setting

The BBG8/BBG8B circuit pack has two hardware switches. Switch 1 (S1) is for product identification and Switch 2 (S2) for the DDM-2000 FiberReach DCC channel. See Figure 7-3.

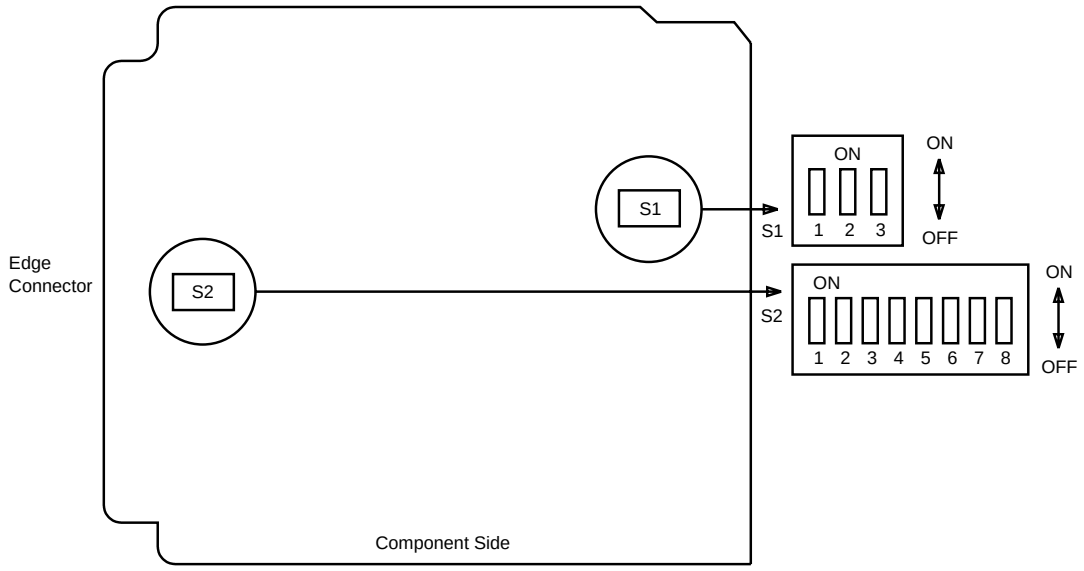

Note: The switch is set by moving the slide toward the desired position. For DDM-2000 FiberReach, all three S1 switches should be in the OFF position. All S2 switches should be ON, with the exception of Switch S2-2, which should be set to OFF.

Figure 7-3. BBG8/BBG8B SYSCTL Option Switches

Switch 1 (S1) Settings

Product Identification			
VALUE	**S1-1**	**S1-2**	**S1-3**
DDM-2000/*SLC*-2000/ DDM-2000 FiberReach	OFF	OFF	OFF

BBG8/BBG8B SYSCTL Quick Reference Summary

Interface Functions

Intrashelf interface functions performed by the SYSCTL are as follows:

a. Direct control of other circuit packs via a serial control link and intrashelf control bus

b. Control of circuit pack and user panel LEDs

c. Detecting the presence of, and identifying, circuit packs installed in the system

d. SONET DCC overhead channel interface to OLIU circuit packs.

Craft Interface:

a. A craft interface automatically provisioned to 300, 1200, 2400, 4800, 9600, or 19,200 baud

b. Provides interface for all advanced provisioning, performance monitoring, administration, and maintenance activities.

User Panel

a. Alarm and status indicators

b. ACO and LED Test Controls.

Miscellaneous Discrete Functions

Miscellaneous discrete functions provided by the SYSCTL are as follows:

a. Miscellaneous discrete environmental alarms and controls.

Maintenance Functions

Maintenance functions provided by the SYSCTL are as follows:

a. Automatic reset on power up

b. Fault detection, isolation, and reporting

c. Protection switching control of other circuit packs

d. Inventory information (*CLEI* code, date of manufacture, etc.).

ECC2 User Panel Circuit Pack Description

Purpose of Circuit

The ECC2 User Panel (USPNL) for the DDM-2000 FiberReach wideband shelf provides system-level information and control functions, as well as LEDS.

Faceplate Controls and Indicators

The ECC2 USPNL is shown in Figure 7-4. LEDs provide system-level information and control functions.

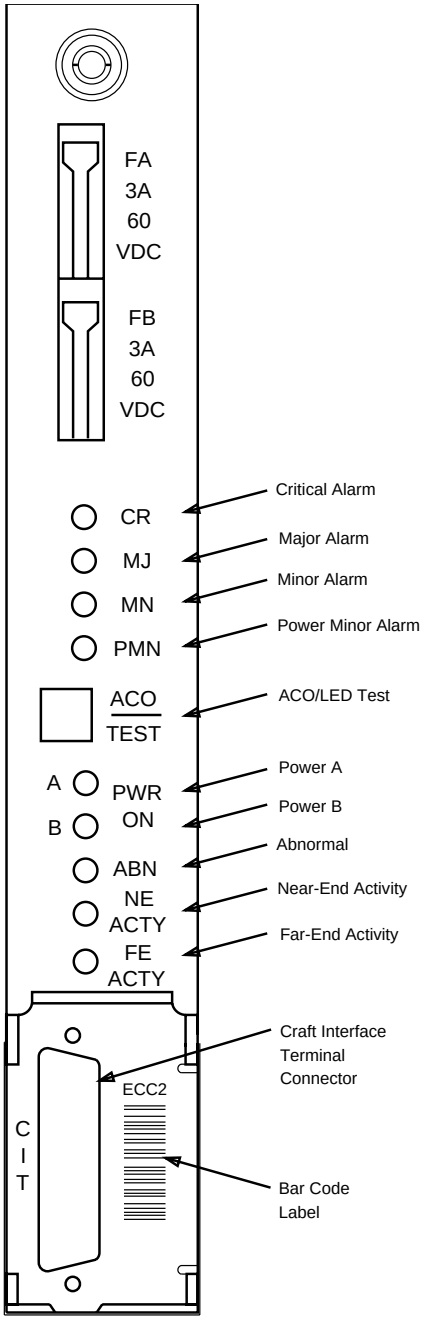

Figure 7-4. DDM-2000 FiberReach Multiplexer ECC2 User Panel

Detailed Description of Operation

The ECC2 USPNL provides the following interfaces for the DDM-2000 FiberReach wideband shelf:

- Alarm and Status LEDs:
  - Critical Alarm
  - Major Alarm
  - Minor Alarm
  - Power Minor Alarm
  - Alarm Cutoff
  - Abnormal
  - Power On - A
  - Power On -B
  - Near-End Activity
  - Far-End Activity.

  Each Power On LED on the ECC2 user panel is driven directly by one of the –48 V power feeds. All other LEDs are controlled by the SYSCTL.
- ACO/LED Test Button:
  - The ACO/LED test button is monitored by the SYSCTL.
- Power Interfaces:
  - The ECC2 user panel contains filters and replaceable fuses for two –48 V power feeds.
- CIT Interface:
  - The ECC2 user panel has a CIT interface which provides a connection between the CIT and the SYSCTL.

Figure 7-5 provides an overall block diagram of the ECC2 user panel.

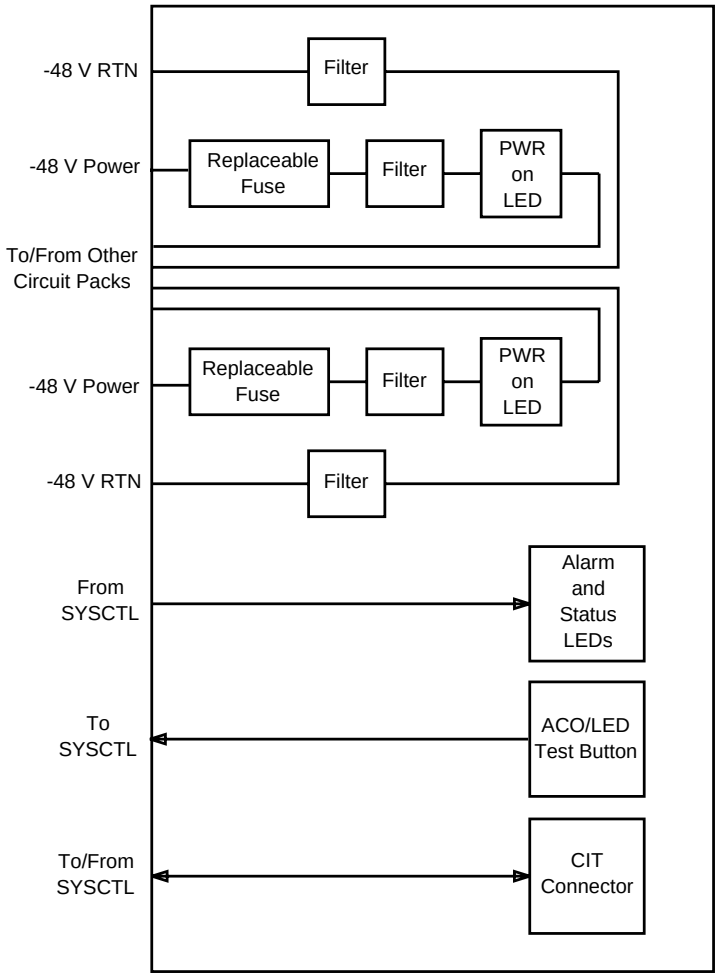

Figure 7-5. ECC2 User Panel Block Diagram

Wideband Shelf - Transmission Circuit Packs

BBF1B DS1 Circuit Pack Description

Purpose of Circuit

The DS1 circuit pack provides a low-speed interface between asynchronous DS1 rate signals and SONET virtual tributary group (VT-G) signals.

DS1 Faceplate Indicator

The DS1 circuit pack FAULT indicator is shown in Figure 7-6. This red FAULT LED is lighted by the SYSCTL on detection of a DS1 circuit pack failure. In the event of an incoming signal failure, this LED flashes on and off.

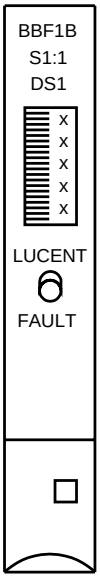

Figure 7-6. BBF1B DS1 Circuit Pack

General Description of Operation

The DS1 circuit pack terminates four bidirectional DS1 lines complying with standard DSX-1 signal specifications. The DS1 circuit pack interfaces to the OLIU circuit pack at the VT-G rate (6.912 MHz) and to the SYSCTL.

Detailed Description of Operation

Transmission Circuitry

Transmit Direction. Figure 7-7 provides an overall block diagram of the DS1 circuit pack. The transmit direction points toward the VT-G, and the receive direction points toward the DS1s. In the transmit direction, the DS1 receives four balanced DS1 bipolar signals. Each of these signals passes through a relay to a DS1 interface circuit that converts it to unipolar nonreturn to zero (NRZ) format, recovers its clock, and sends it to the multiplexer (MUX) circuit. The MUX circuit converts each DS1 rate input into a 1.728 Mb/s VT1.5 signal, and then byte interleaves the four VT1.5s to create a VT-G signal that it sends to the OLIU pack using the frame sync and clock received from the OLIU.

Receive Direction. The DS1 receives a VT-G with frame information from the OLIU and demultiplexes the VT-G into four unique VT1.5 signals. Each VT1.5 passes through circuitry that performs pointer interpretation, removes the VT path overhead bits, the fixed stuff bits, and the overhead communications channel bits, and desynchronizes the embedded DS1. The DS1 rate signal is AMI or B8ZS encoded, preequalized with a selectable line build out (LBO). It is then sent as a balanced signal to a DSX-1 that may be located up to 655 feet from the system, or to a DS1 termination located up to 1310 feet from the system.

Control Circuitry

The DS1 circuit pack interfaces with the SYSCTL via the intrashelf control bus. Redundancy in the intrashelf control bus assures the level of control required to perform protection switching and alarming of a faulty circuit pack. The DS1 provides maintenance elements for reporting the status of the circuit pack and the incoming VT1.5 and DS1 signals, as well as the circuit pack inventory information (*CLEI* code, date of manufacture, etc.). These maintenance elements are used by the SYSCTL for fault detection and isolation. The DS1 responds to control signals from the SYSCTL for functions including protection switching and FAULT light-emitting diode (LED) control.

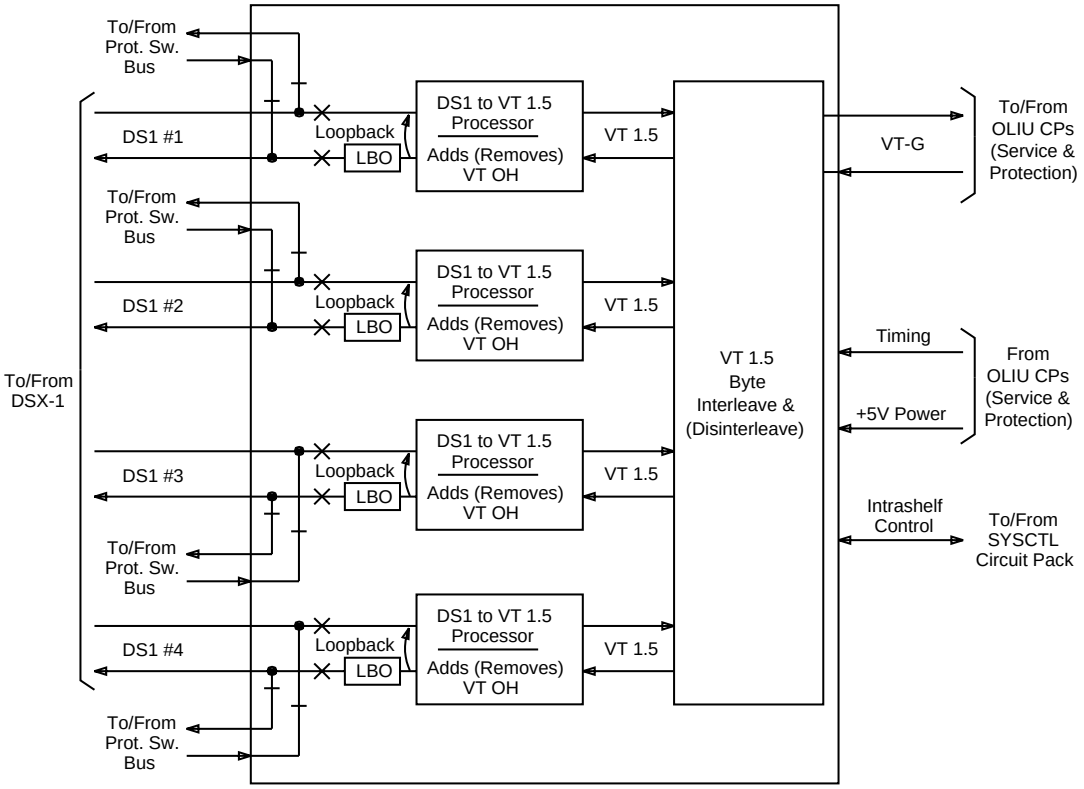

Figure 7-7. BBF1B DS1 Circuit Pack Block Diagram

Protection Circuitry

Optional DS1 circuit pack protection is provided with on-board relays on the DSX-1 side and with logic selectors at the VT-G level on the OLIU circuit pack. The SYSCTL controls these relays through two serial interfaces so that a failure of one serial interface to the DS1 does not prevent control of the relays. If +5 V power on the DS1 fails, the relays default to the protection state. If the SYSCTL is removed, the relays remain in their current state.

When a DS1 circuit pack is inserted, the relays are in the protection state until the SYSCTL determines that the circuit pack is good. Shorting contacts are provided in the backplane connectors so that when the circuit pack is removed, the DSX-1 cable pairs short through to the protection bus.

The BBF3 DS1PM circuit pack can be mixed with the BBF1B. If mixed, the protection circuit pack must be a BBF3 DS1PM.

Fault Detection Circuitry

The DS1 circuit pack has in-service and out-of-service built-in test capability. In-service testing is continuous and errors are reported when they occur to the SYSCTL via the intrashelf control bus. An out-of-service test is performed whenever the DS1 circuit pack is inserted or recovers from a transient failure. The incoming DS1 signal is monitored for bipolar threshold crossings in excess of 10^{-3} 10^{-6}, 10^{-7} or 10^{-8}. Incoming VT1.5 signals are monitored for VT AIS, VT LOP, and yellow.

Loopbacks

The DS1 circuit pack provides a terminal loopback for testing. The terminal loopback is provided on the DS1 circuit pack for each DS1 low-speed interface. The loopback is implemented inside the MUX/DEMUX/DESYNC device and bridges the desynchronizer output signal (transmitted toward the DSX-1) back into the DS1 synchronizer input. When the loopback is operated, the DS1 interface device forces AIS toward the DSX.

Performance Monitoring

The DS1 circuit pack monitors VT path parameters derived from the V5 coding violations.

Power Circuitry

The OLIU circuit packs supply +5 V power to the DS1 circuit packs. These two inputs are diode ORed and the output is fused and then filtered before it is used to power the rest of the circuit pack. A failure of the fuse causes the red FAULT LED to light.

DS1 Hardware Settings

The line coding and line build out (LBO) are switch settable. (Other parameters are provisioned through the software.) The locations of the DS1 circuit pack option switches are shown in Figure 7-8 and Table 7-1and Table 7-2.

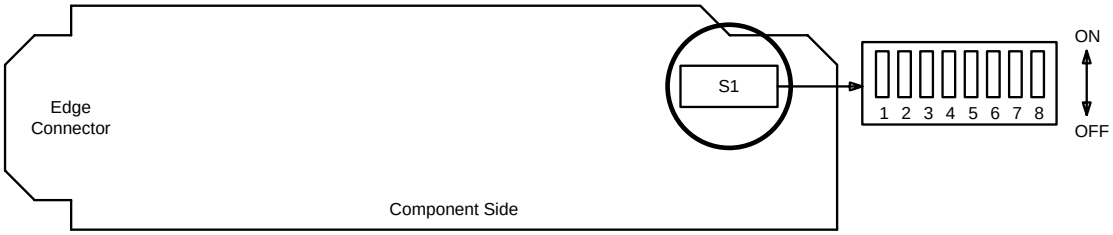

Note: The switches are set by moving the slide toward the desired position.

Figure 7-8. BBF1B DS1 Option Switches

Table 7-1. DS1 Cable LBO Settings

DS1 Cable LBO Settings (Note)					
613C (608C) Cable Length to DSX-1 (feet)	1249C Cable Length to DSX-1 (feet)	Other Cable dB Loss to DSX-1 at 772 KHz	DIP Switch Settings		
			S1-1	S1-2	S1-3
0 to 133*	0 to 90*	0 to 0.6	OFF	OFF	OFF
>133 to 267	>90 to 180	>0.6 to 1.2	OFF	OFF	ON
>267 to 400	>180 to 270	>1.2 to 1.8	OFF	ON	OFF
>400 to 533	>270 to 360	>1.8 to 2.4	OFF	ON	ON
>533 to 655	>360 to 450	>2.4 to 2.8	ON	OFF	OFF

Note: Distances specified are to the DSX-1 interconnect only. For direct connection to DS1 terminating equipment, these distances can be doubled.

* Minimum of 30 feet required to meet EMI requirements. Unless specified, cables with filtered connectors are used.

Table 7-2. DS1 Line Code Settings

DS1 Line Code Settings (Notes)				
Line Code Format	DIP Switch Settings			
	S1-4 (Port 1)	S1-5 (Port 2)	S1-6 (Port 3)	S1-7 (Port 4)
B8Zs	OFF	OFF	OFF	OFF
AMI	ON	ON	ON	ON

Notes:
1. Switch section 8 (S1-8) is unused and ignored by the system.
2. Line code is software overrideable.

DS1 Quick Reference Summary

Transmit Functions

Major transmit functions of the DS1 circuit pack are as follows:

a. Receives four AMI or B8ZS encoded DS1 signals from a DSX-1

b. Receives DS1and NRZ data from each DS1 signal

c. Synchronizes and maps each data signal to a VT1.5 synchronous payload envelope (SPE)

d. Inserts VT path overhead

e. Multiplexes four VT1.5 SPEs to a byte-interleaved VT-G signal

f. Provides the VT-G signal to an OLIU circuit pack.

Receive Functions

Major receive functions of the DS1 circuit pack are as follows:

a. Receives a SONET VT-G frame synchronizing signal from its associated OLIU

b. Demultiplexes the VT-G into four VT1.5 signals

c. Terminates VT path and the embedded DS1 signal from each VT1.5 SPE

d. Desynchronizes the DS1 signals

e. Encodes each DS1 signal into either AMI or B8ZS format

f. Preequalizes (with line build out) each DS1 and provides them to a DSX-1 as bipolar signals.

Control Functions

The major control functions of the DS1 circuit pack are as follows:

a. Protection switching for OLIU circuit pack protection
b. VT path overhead processing
c. Internal fault detection
d. Inventory information (*CLEI* code, date of manufacture, etc.).

Maintenance Signal Functions

The major maintenance signal functions are as follows:

a. Detects VT path AIS
b. Inserts DS1 AIS toward fiber and toward DSX-1
c. Inserts and detects VT path yellow signal.

BBF3/BBF3B DS1PM Circuit Pack Description

Purpose of Circuit

The DS1PM circuit pack provides all of the functions of a BBF1B circuit pack and also provides performance monitoring (PM) of SF and ESF signals to allow for T1 tariff verification. For PM, the DS1 signals from the DSX are monitored. Performance monitoring data from the opposite direction is provided by accessing the ESF data link. The new BBF3B has the additional capability of allowing single DS1 facility loopbacks.

DS1PM Faceplate Indicator

The DS1PM circuit pack FAULT indicator is shown in Figure 7-9. This red FAULT LED is lighted by the SYSCTL on detection of a DS1PM circuit pack failure. In the event of an incoming signal failure, this LED flashes on and off.

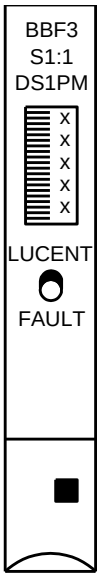

Figure 7-9. BBF3 DS1PM Circuit Pack

General Description of Operation

The DS1PM circuit pack terminates four bidirectional DS1 lines complying with standard DSX-1 signal specifications. The DS1PM circuit pack interfaces to the OLIU circuit pack at the VT-G rate (6.912 MHz) and to the SYSCTL.

The DS1 and DS1PM circuit packs are, with respect to transmission, functionally equivalent. In addition to performing all of the functions of the DS1 circuit pack, the DS1PM circuit pack provides performance monitoring for the DS1 rate transmit signals.

Detailed Description of Operation

Transmission Circuitry

Transmit Direction. Figure 7-10 provides an overall block diagram of the DS1PM circuit pack. The transmit direction points toward the VT-G and the receive direction points toward the DS1s. In the transmit direction, the DS1PM receives four balanced DS1 bipolar signals. Each of these signals passes through a relay to a DS1 interface circuit that converts it to unipolar nonreturn to zero (NRZ) format and sends it to the multiplexer (MUX) and framing (framer) circuits. The MUX circuit converts each DS1 rate input into a 1.728 Mb/s VT1.5 signal and then byte-interleaves the four VT1.5s to create a VT-G signal that it sends to the OLIU circuit pack, using the frame sync received from the OLIU.

Receive Direction. The DS1PM receives a VT-G with frame information from the OLIU and demultiplexes the VT-G into four unique VT1.5 signals. Each VT1.5 passes through circuitry that performs pointer interpretation, removes the VT path overhead bits, the fixed stuff bits, and the overhead communications channel bits, and desynchronizes the embedded DS1. The DS1 rate signal is AMI or B8ZS encoded, preequalized with a selectable line build out (LBO), and then sent as a balanced signal to Alternate Mark Inversion a DSX-1 that may be located up to 655 feet from the system.

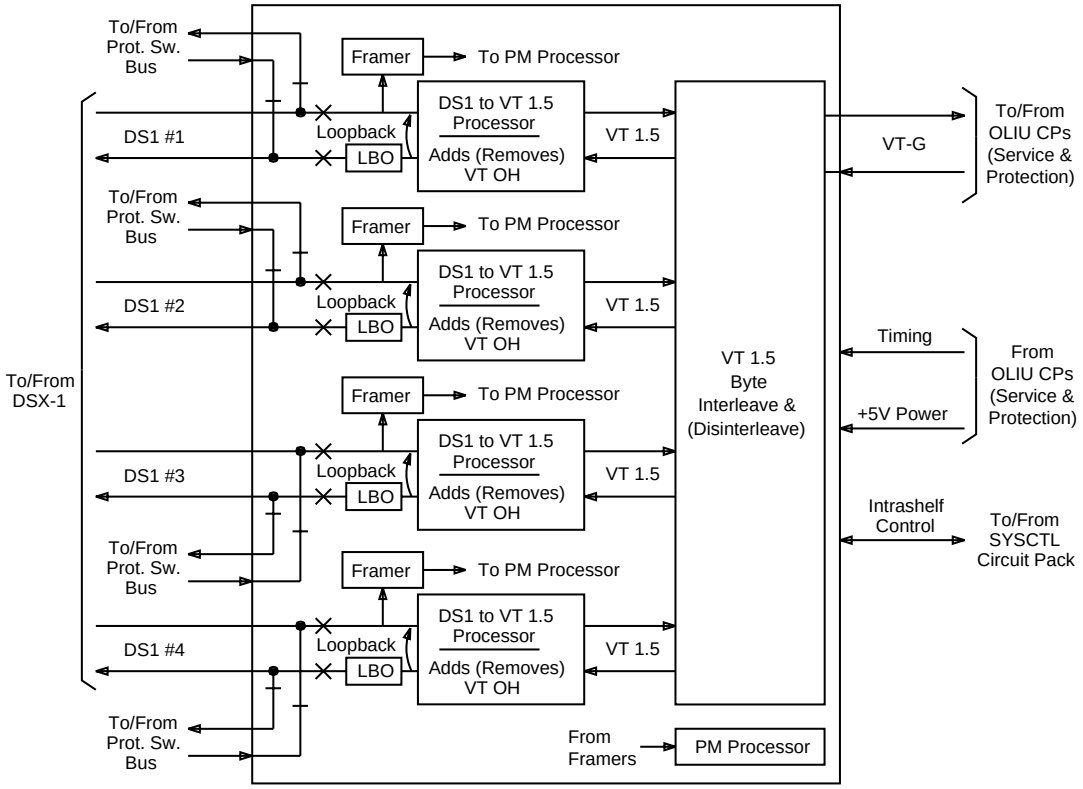

Figure 7-10. DS1PM Circuit Pack Block Diagram

Control Circuitry

The DS1PM circuit pack interfaces with the SYSCTL over the intrashelf control bus. Redundancy in the intrashelf control bus assures the level of control required to perform protection switching and alarming of a faulty circuit pack. The DS1PM provides maintenance elements for reporting the status of the circuit pack and the incoming VT1.5 and DS1 signals, as well as the circuit pack inventory information (*CLEI* code, date of manufacture, etc.). These maintenance elements are used by the SYSCTL for fault detection and isolation. The DS1PM responds to control signals from the SYSCTL for functions including protection switching. The framer circuit acquires frame information (either SF or ESF) from the DS1 signal and sends the information to the PM processor. The PM processor collects information from the framing circuitry and generates near-end and far-end (ESF only) DS1 PM parameters. When provisioned for DS1 clear channel, no PM path parameters are generated.

Protection Circuitry

Optional revertive DS1PM circuit pack protection is provided with on-board relays on the DSX-1 side and with logic selectors at the VT-G level on the OLIU circuit packs. The SYSCTL controls these relays through two serial interfaces so that a failure of one serial interface to the DS1PM does not prevent control of the relays. If +5 V power on the DS1PM fails, the relays default to the protection state. If the SYSCTL is removed, the relays remain in their current state.

Shorting contacts are provided in the backplane connectors so that when the circuit pack is removed, the DSX-1 cable pairs short through to the protection bus.

When a DS1PM circuit pack is inserted, the relays are in the protection state until the SYSCTL determines that the circuit pack is good.

The BBF3 DS1PM circuit pack can be mixed with the BBF1/1B. If mixed, the protection circuit pack must be a BBF3 DS1PM circuit pack.

Fault Detection Circuitry

The DS1PM circuit pack has in-service and out-of-service built-in test capability. In-service testing is continuous and errors are reported when they occur to the SYSCTL via the intrashelf control bus. An out-of-service test is performed whenever the DS1PM circuit pack is inserted or recovers from a transient failure. The incoming DS1 signal is monitored for bipolar threshold crossings in excess of 10^{-3}, 10^{-6}, 10^{-7}, or 10^{-8}. Incoming VT1.5 signals are monitored for VT AIS, VT LOP, and yellow.

Loopbacks

The DS1PM circuit pack provides a terminal loopback for testing. The terminal loopback is provided on the DS1PM circuit pack for each DS1 low-speed interface. The loopback is implemented inside the MUX/DEMUX/DESYNC device and bridges the desynchronizer output signal (transmitted toward the DSX-1) back into the DS1 synchronizer input. When the loopback is operated, the DS1 interface device forces AIS toward the DSX.

Performance Monitoring

The DS1PM circuit pack provides PM circuitry for the following performance parameters:

- VT path parameters derived from V5 coding violations
- DS1 PM derived from SF/ESF frame format depending on provisioning.

Power Circuitry

The OLIU circuit packs supply +5 V power to the DS1PM circuit packs. These inputs are diode ORed and the output is fused and then filtered before it is used to power the rest of the circuit pack. A failure of the fuse causes the red FAULT LED to light.

DS1PM Hardware Settings

The line coding and line build out (LBO) are switch settable. Other parameters are provisionable through the software. The locations of the DS1PM circuit pack option switches are shown in Figure 7-11 and Tables 7-3 and 7-4.

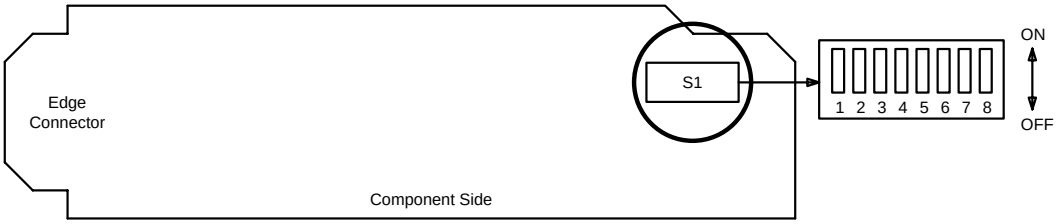

Note: The switches are set by moving the slide toward the desired position.

Figure 7-11. BBF3 DS1PM Option Switches

Table 7-3. DS1PM Cable LBO Settings

DS1PM Cable LBO Settings (Note)					
613C (608C) Cable Length to DSX-1 (feet)	1249C Cable Length to DSX-1 (feet)	Other Cable dB Loss to DSX-1 at 772 KHz	DIP Switch Settings		
			S1-1	S1-2	S1-3
0 to 133*	0 to 90*	0 to 0.6*	OFF	OFF	OFF
>133 to 267	>90 to 180	>0.6 to 1.2	OFF	OFF	ON
>267 to 400	>180 to 270	>1.2 to 1.8	OFF	ON	OFF
>400 to 533	>270 to 360	>1.8 to 2.4	OFF	ON	ON
>533 to 655	>360 to 450	>2.4 to 2.8	ON	OFF	OFF

Note: Distances specified are to the DSX-1 interconnect only. For direct connection to DS1 terminating equipment, these distances can be doubled.

* Minimum of 30 feet required to meet EMI requirements. Unless specified, cables with filtered connectors are used.

Table 7-4. DS1PM Line Code Settings

DS1PM Line Code Settings (Notes)				
Line Code Format	DIP Switch Settings			
	S1-4 (Port 1)	S1-5 (Port 2)	S1-6 (Port 3)	S1-7 (Port 4)
B8ZS	OFF	OFF	OFF	OFF
AMI	ON	ON	ON	ON

Notes:

1. Switch section 8 (S1-8) is unused and must be off.
2. Line code is software overrideable.

DS1PM Quick Reference Summary

Transmit Functions

Major transmit functions of the DS1PM circuit pack are as follows:

a. Receives four AMI or B8ZS encoded DS1 signals from a DSX-1
b. Recovers DS1 clock and NRZ data from each DS1 signal
c. Synchronizes and maps each data signal to a VT1.5 synchronous payload envelope (SPE)
d. Inserts VT path overhead
e. Multiplexes four VT1.5 SPEs to a byte-interleaved VT-G signal
f. Provides the VT-G signal to an OLIU circuit pack.

Receive Functions

Major receive functions of the DS1PM circuit pack are as follows:

a. Receives a SONET VT-G clock and frame synchronizing signals from its associated OLIU
b. Demultiplexes the VT-G into four VT1.5 signals
c. Terminates VT path and the embedded DS1 signal from each VT1.5 SPE
d. Desynchronizes the DS1 signals
e. Encodes each DS1 signal into either AMI or B8ZS format
f. Preequalizes (with line build out) each DS1 and provides them to a DSX-1 as bipolar signals.

Control Functions

The major control functions of the DS1PM circuit pack are as follows:

a. Protection switching for OLIU circuit pack protection
b. VT path overhead processing
c. Internal fault detection
d. Inventory information (*CLEI* code, date of manufacture, etc.)
e. Monitors a DS1 signal with SF or ESF frame format and generates PM data.

Maintenance Signal Functions

The major maintenance signal functions are as follows:

a. Monitors DS1 signal for near-end and far-end performance
b. Detects VT path AIS
c. Inserts DS1 AIS toward fiber and toward DSX-1
d. Inserts and detects VT path yellow signal.

177A Retainer Card Description

Purpose of Card

To ensure proper operation of DS1/DS1PM circuit pack protection switching, the 177A Retainer card (Figure 7-12) must be installed in all unused slots within a low-speed group that is partially equipped with DS1/DS1PM circuit packs.

CAUTION:
Unused low-speed interface slots within a partially equipped group must be equipped with 177A Retainer cards if DS1 protection is used. Failure to do so may result in corrupted transmission.

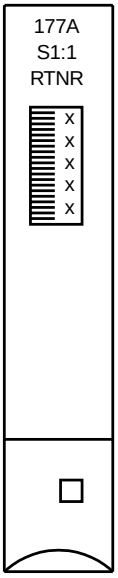

tpa 789738/01

Figure 7-12. 177A Retainer Card

BBG4/BBG4B DS3 Circuit Pack Description

Purpose of Circuit

The BBG4/BBG4B DS3 circuit pack provides a low-speed interface between asynchronous DS3-rate signals and SONET STS-1 signals. The BBG4B DS3 provides the same functions as the BBG4 DS3 and can be used in place of the BBG4 DS3 in all applications. In addition, the BBG4B DS3 has enhanced DS3 PM capabilities.

BBG4/BBG4B DS3 Faceplate Indicators

The BBG4/BBG4B DS3 circuit pack faceplate indicators are shown in Figure 7-13.

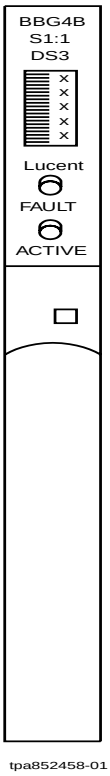

Figure 7-13. BBG4B DS3 Circuit Pack

The red FAULT LED lights by the SYSCTL on detection of BBG4/BBG4B DS3 circuit pack failure. In the event of an incoming DS3 signal failure, this LED will flash on and off. The green ACTIVE LED lights when the circuit pack is active (carrying service).

General Description of Operation

The BBG4/BBG4B DS3 circuit pack provides bidirectional transport of one DS3 signal through DDM-2000 OC-3 in either clear channel (CC) mode, violation monitor and removal (VMR) mode, or violation monitor (VM) mode, by mapping the DS3 into an STS-1 signal. The BBG4/BBG4B DS3 performs maintenance and provisioning functions associated with the STS-1 and DS3 signals and provides access to the STS-1 path overhead. It interfaces to the OLIU at the STS-1 rate, to the DSX-3, and to the SYSCTL. When provisioned for the CC mode, the DS3 can transport any DS3 rate signal that meets specified electrical interface requirements. When provisioned for the VMR or VM mode, the DS3 signal must meet both electrical and DS3 frame format requirements.

Detailed Description of Operation

Transmission Circuitry

Transmit Direction. Figure 7-14 provides an overall block diagram of the BBG4/BBG4B DS3 circuit pack. The transmit direction is the direction toward the STS-1 signal, and receive direction refers to the direction toward the DSX-3. In the transmit direction, the BBG4/BBG4B DS3 receives an incoming B3ZS encoded DS3 signal from the DSX-3. A closed protection relay contact routes the DS3 to a circuit that splits the signal and sends one output to the companion (standby) circuit pack and the other to its own receiver. The BBG4/BBG4B DS3 receiver performs equalization recovery. The MUX circuitry performs B3ZS decoding, optional automatic DS3 AIS insertion, and a provisionable VMR function, then synchronizes and maps the DS3 to the STS-1 rate. The DS3 signal is then synchronized to the STS-1 payload rate, STS-1 path overhead is inserted, and an STS-1 rate signal is transmitted to an OLIU pair.

Receive Direction. The BBG4/BBG4B DS3 receives STS-1 data from both the active and standby OLIUs, selects one STS-1, performs pointer interpretation, processes and removes the path overhead, desynchronizes the embedded DS3, provides a provisionable VMR function, and then B3ZS encodes the signal for transmission to the DSX-3. A jumper allows the user to insert or remove an LBO network (225 ft. of 734A-type cable equivalent) to provide the required signal level and shape at the DSX-3.

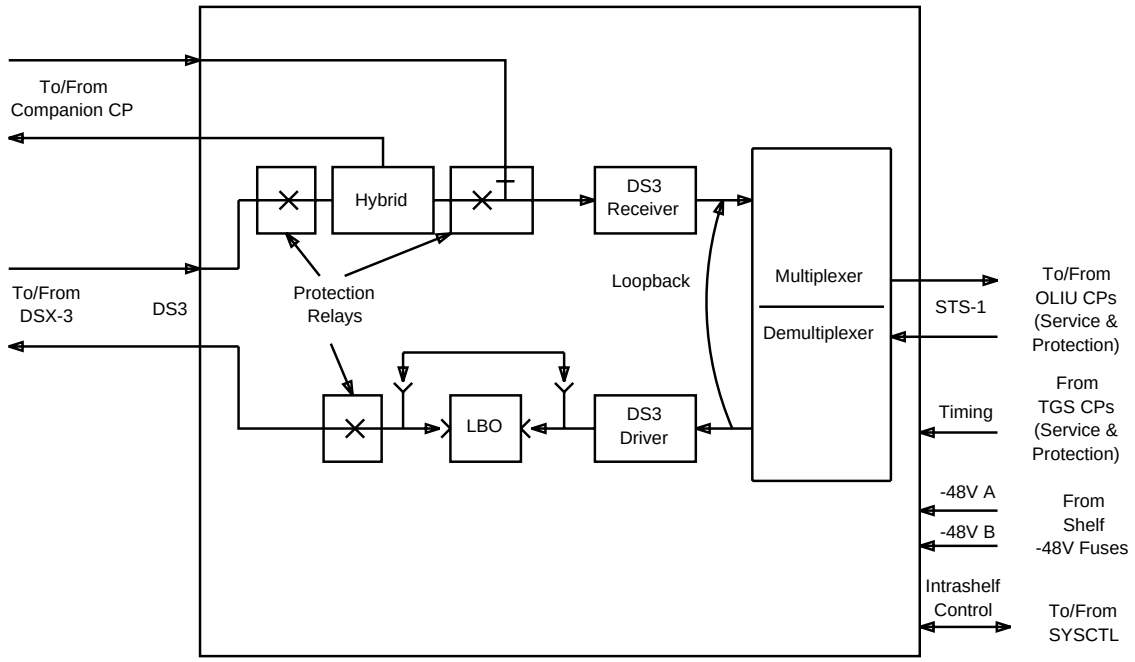

Figure 7-14. BBG4/BBG4B DS3 Circuit Pack Block Diagram

VMR Function

Before the DS3 signal is B3ZS-encoded (receive) or decoded (transmit), a VMR function can be provisioned via the control circuitry for one of three possible modes. These three modes are as follows:

- VMR with DS3 AIS insertion—default
- VM without removal of violations but with AIS insertion
- No violation monitoring CC mode with options for
  - AIS insertion
  - No AIS insertion.

Control Circuitry

The BBG4/BBG4B DS3 circuit pack interfaces with the SYSCTL via the intra-shelf control bus. Redundancy in the intra-shelf control bus assures the level of control required to perform protection switching and alarming of a faulty circuit pack. The BBG4/BBG4B DS3 provides maintenance elements for reporting the status of the circuit pack, status of the incoming STS-1 and DS3 signals, as well as the circuit pack inventory information (*CLEI* code, date of manufacture, etc.). These maintenance elements are used by the SYSCTL for fault detection and isolation. Conversely, the BBG4/BBG4B DS3 responds to control signals from the SYSCTL (such as active and fault LED controls).

Protection Circuitry

Optional 1x1 nonrevertive BBG4/BBG4B DS3 circuit pack protection is provided. Switch points for the STS-1 side of the DS3 are located on the OLIU circuit packs. Switch points for the DS3 side are implemented with relays on the BBG4/BBG4B DS3 circuit pack. To ensure that the relays can be operated when the circuit pack fails, the relay is controlled by the SYSCTL, via the control interfaces. Also, if power to the board is lost, the relay switches autonomously to the standby state. When a new board is inserted, it defaults to the standby state until provisioned active by the SYSCTL.

On the DS3 side, a single DS3 input from a DSX-3 is sent to both the active and standby BBG4/BBG4B DS3 circuit packs. Only the active unit selects the DS3 input. The SYSCTL supervises the state of the active and standby units so that the relay state of each is always the inverse of the other. The hybrid on the active unit splits the DS3 input signal and sends it to the standby unit and to its own receiver. To implement a protection switch on the DS3 side, the SYSCTL switches the relays on each unit to their opposite state.

When a BBG4/BBG4B DS3 is removed, shorting contacts on the backplane connector operate so that the DS3 input signal from its companion unit is returned for proper termination.

Fault Detection Circuitry

The BBG4/BBG4B DS3 circuit pack has in-service and out-of-service built-in test capability. In-service testing is continuous and errors are reported when they occur to the SYSCTL via the intra-shelf control bus. An out-of-service test is performed whenever the BBG4/BBG4B DS3 circuit pack is inserted or recovers from a transient failure.

The incoming DS3 signal is monitored for bipolar threshold crossings in excess of 10^{-3} or 10^{-6}, LOS, DS3 OOF, and DS3 AIS. Incoming STS-1 signals are monitored for STS AIS, STS LOP, and yellow and are also monitored for DS3 OOF and AIS.

Loopbacks

Two loopbacks are provided on the BBG4/BBG4B DS3. The terminal loopback bridges the DS3 desynchronizer output signal (transmitted toward the DSX-3) back into the DS3 synchronizer input. Operation of the loopback does not affect the signal transmitted to the DSX-3. The facility loopback bridges the STS-1 output signal to the OLIU back toward the DSX-3. Operation of this loopback does not affect the signal transmitted to the fiber. Both loopbacks are controlled by the SYSCTL through the intra-shelf control bus.

Performance Monitoring

The BBG4/BBG4B DS3 circuit pack provides PM circuitry for the following performance parameters:

- STS path parameters derived from B3 coding violations
- DS3 path parameters derived from P-bit coding violations
- DS3 path parameters derived from frame and multiframe (F&M) bit errors
- DS3 line errors based on B3ZS violations (BBG4B only)
- DS3 P-bit and F&M bit PM for both directions of transmission (BBG4B only)
- C-bit parity and FEBE performance monitoring for both directions of transmission (BBG4B only).

BBG4/BBG4B DS3 Hardware Settings

The location of the BBG4/BBG4B DS3 circuit pack LBO jumpers is shown in Figure 7-15. The BBG4/BBG4B DS3 LBO settings are shown in the table.

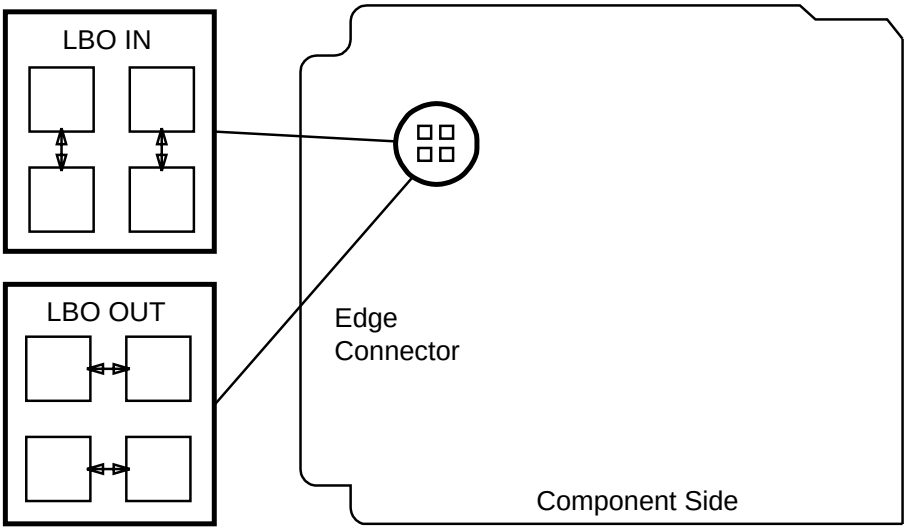

BBG4/BBG4B DS3 LBO Settings

Cable Length (Ft)		
735A Cable	734D Cable	**LBO Setting**
0 to 125 >125 to 250	0 to 225 >225 to 450	LBO IN LBO OUT

Figure 7-15. BBG4/BBG4B DS3 Line Build-Out (LBO) Jumpers

Power Circuitry

The BBG4/BBG4B DS3 circuit pack receives two sources of –48 volts that are in turn diode ORed, fused, and filtered before conversion to +5 volts to power the rest of the circuit pack. A failure of the fuse or converter causes the red FAULT LED to light.

BBG4/BBG4B DS3 Quick Reference Summary

Transmit Functions

The BBG4/BBG4B DS3 transmit functions are as follows:

- Receives a B3ZS-encoded DS3 signal from a DSX-3
- Recovers DS3 and NRZ data
- Optionally checks and/or corrects P-bit parity errors
- Synchronizes the data signal to STS-1 signal rate
- Inserts STS-1 path overhead
- Provides the STS-1 signal to the OLIU circuit packs.

Receive Functions

The following receive functions are performed by the BBG4/BBG4B DS3 circuit pack:

- Desynchronizes the incoming STS-1 signal
- Terminates the STS-1 path
- Optionally checks and/or corrects P-bit parity errors
- B3ZS encodes the outgoing DS3 signal
- Pre-equalizes the DS3 signal (with LBO) and transmits it to a DSX-3.

Control Functions

The major control functions are as follows:

- Protection switching for BBG4/BBG4B DS3 circuit packs
- STS-1 path overhead processing
- Internal fault detection
- Inventory information (*CLEI* code, date of manufacture, etc.).

Maintenance Signal Functions

The major maintenance signal functions are as follows:

- Detects STS-1 path AIS coming from the fiber
- Detects STS-1 path unequipped signal coming from the fiber
- Inserts DS3 AIS toward the fiber and DSX-3
- Detects DS3 AIS coming from the fiber
- Inserts and detects STS-1 path yellow signal to/from the fiber
- Detects DS3 OOF from the fiber
- Detects DS3 B3ZS violation threshold crossings from the DSX-3
- Inserts and detects STS-1 path trace (BBG4B only).

BBF6 T1 EXT Circuit Pack Description

Purpose of Circuit

The T1EXT circuit pack provides all of the functions of a BBF3B circuit pack for two T1 carrier lines. The T1EXT circuit pack also provides 60mA simplex line powering and performance monitoring (PM) of SF and ESF signals to allow for T1 tariff verification. For PM, the T1 signals from the line are monitored. Performance monitoring data from the opposite direction is provided by accessing the ESF data link.

T1EXT Faceplate Indicator

The T1EXT circuit pack FAULT indicator is shown in Figure 7-16. This red FAULT LED is lighted by the SYSCTL on detection of a T1EXT circuit pack failure. In the event of an incoming signal failure, this LED flashes on and off.

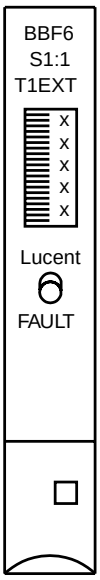

tpa852473-01

Figure 7-16. BBF6 T1EXT Circuit Pack

General Description of Operation

The T1EXT circuit pack terminates two bidirectional T1 lines complying with standard T1 signal specifications. The T1EXT circuit pack interfaces to the OLIU circuit pack at the VT-G rate (6.912 MHz) and to the SYSCTL.

The DS1PM and T1EXT circuit packs are, with respect to transmission, functionally equivalent. In addition to performing all of the functions of the DS1 circuit pack, the T1EXT circuit pack provides performance monitoring for the DS1 rate transmit signals.

Detailed Description of Operation

Transmission Circuitry

Transmit Direction. Figure 7-17 provides an overall block diagram of the T1EXT circuit pack. The transmit direction points toward the VT-G and the receive direction points toward the DS1s. In the transmit direction, the T1EXT receives two balanced DS1 bipolar signals. Each of these signals passes through a relay to a DS1 interface circuit that converts it to unipolar nonreturn to zero (NRZ) format, recovers its clock, and sends it to the multiplexer (MUX) and framing (framer) circuits. The MUX circuit converts each DS1 rate input into a 1.728 Mb/s VT1.5 signal and then byte-interleaves the four VT1.5s to create a VT-G signal that it sends to the OLIU circuit pack, using the frame sync and clock received from the OLIU.

Receive Direction. The T1EXT receives a VT-G with frame information from the OLIU and demultiplexes the VT-G into two unique VT1.5 signals. Each VT1.5 passes through circuitry that performs pointer interpretation, removes the VT path overhead bits, the fixed stuff bits, and the overhead communications channel bits, and desynchronizes the embedded DS1. The DS1 rate signal is AMI or B8ZS encoded, preequalized with a selectable line build out (LBO), and then sent as a balanced signal to Alternate Mark Inversion a DSX-1 that may be located up to 655 feet from the system.

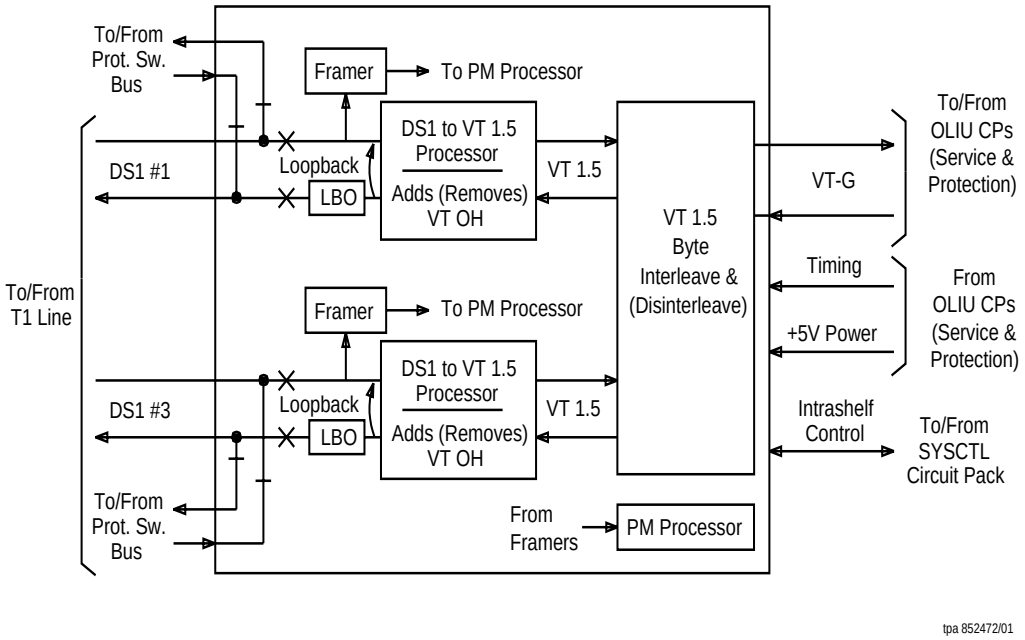

Figure 7-17. T1EXT Circuit Pack Block Diagram

Control Circuitry

The T1EXT circuit pack interfaces with the SYSCTL over the intrashelf control bus. Redundancy in the intrashelf control bus assures the level of control required to perform protection switching and alarming of a faulty circuit pack. The T1EXT provides maintenance elements for reporting the status of the circuit pack and the incoming VT1.5 and DS1 signals, as well as the circuit pack inventory information (*CLEI* code, date of manufacture, etc.). These maintenance elements are used by the SYSCTL for fault detection and isolation. The T1EXT responds to control signals from the SYSCTL for functions including protection switching. The framer circuit acquires frame information (either SF or ESF) from the DS1 signal and sends the information to the PM processor. The PM processor collects information from the framing circuitry and generates near-end and far-end (ESF only) DS1 PM parameters. When provisioned for DS1 clear channel, no PM path parameters are generated.

Protection Circuitry

Optional revertive T1EXT circuit pack protection is provided with on-board relays on the T1 line side and with logic selectors at the VT-G level on the OLIU circuit packs. The SYSCTL controls these relays through two serial interfaces so that a failure of one serial interface to the T1EXT does not prevent control of the relays. If +5 V power on the T1EXT fails, the relays default to the protection state. If the SYSCTL is removed, the relays remain in their current state.

For a mixed modem, 1X1 protection is required in a FiberReach shelf. Protection can only be 1X1. 1X7 protection is not permitted.

Shorting contacts are provided in the backplane connectors so that when the circuit pack is removed, the T1 line cable pairs short through to the protection bus.

When a T1EXT circuit pack is inserted, the relays are in the protection state until the SYSCTL determines that the circuit pack is good.

The BBF6 T1EXT circuit pack can be mixed with the BBF1/1B. If mixed, the protection circuit pack must be a BBF3 DS1PM circuit pack.

Fault Detection Circuitry

The T1EXT circuit pack has in-service and out-of-service built-in test capability. In-service testing is continuous and errors are reported when they occur to the SYSCTL via the intra-shelf control bus. An out-of-service test is performed whenever the T1EXT circuit pack is inserted or recovers from a transient failure. The incoming DS1 signal is monitored for bipolar threshold crossings in excess of 10^{-3}, 10^{-6}, 10^{-7}, or 10^{-8}. Incoming VT1.5 signals are monitored for VT AIS, VT LOP, and yellow.

Loopbacks

The T1EXT circuit pack provides a terminal loopback for testing. The terminal loopback is provided on the T1EXT circuit pack for each DS1 low-speed interface. The loopback is implemented inside the MUX/DEMUX/DESYNC device and bridges the desynchronizer output signal (transmitted toward the T1 line) back into the DS1 synchronizer input. When the loopback is operated, the DS1 interface device forces AIS toward the DSX.

Performance Monitoring

The T1EXT circuit pack provides PM circuitry for the following performance parameters:

- VT path parameters derived from V5 coding violations
- T1EXT PM derived from SF/ESF frame format depending on provisioning.

Power Circuitry

The OLIU circuit packs supply +5 V power to the T1EXT circuit packs. These inputs are diode ORed and the output is fused and then filtered before it is used to power the rest of the circuit pack. A failure of the fuse causes the red FAULT LED to light.

The T1EXT also simplexes 60mA constant current on the line for powering a CSU at the far end/or provides sealing current for the line.

T1EXT Hardware Settings

The line coding and line build out (LBO) are switch settable. Other parameters are provisionable through the software. The locations of the T1EXT circuit pack option switches are shown in Figure 7-18 and Table 7-5 and Table 7-6.

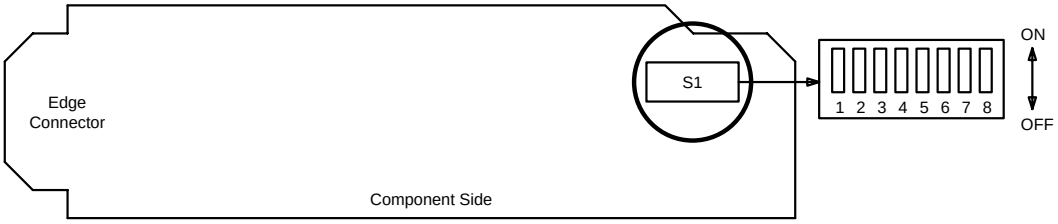

Note: The switches are set by moving the slide toward the desired position.

Figure 7-18. BBF6 T1EXT Option Switches

Table 7-5. T1EXT Cable LBO Settings

T1EXT Cable LBO Settings (Note)					
613C (608C) Cable Length to DSX-1 (feet)	1249C Cable Length to DSX-1 (feet)	Other Cable dB Loss to DSX-1 at 772 KHz	DIP Switch Settings		
			S1-1	S1-2	S1-3
0 to 133*	0 to 90*	0 to 0.6*	OFF	OFF	OFF
>133 to 267	>90 to 180	>0.6 to 1.2	OFF	OFF	ON
>267 to 400	>180 to 270	>1.2 to 1.8	OFF	ON	OFF
>400 to 533	>270 to 360	>1.8 to 2.4	OFF	ON	ON
>533 to 655	>360 to 450	>2.4 to 2.8	ON	OFF	OFF

Note: Distances specified are to the DSX-1 interconnect only. For direct connection to DS1 terminating equipment, these distances can be doubled.

* Minimum of 30 feet required to meet EMI requirements. Unless specified, cables with filtered connectors are used.

Table 7-6. T1EXT Line Code Settings

T1EXT Line Code Settings (Notes)				
Line Code Format	**DIP Switch Settings**			
	S1-4 (Port 1)	**S1-5 (Port 2)**	**S1-6 (Port 3)**	**S1-7 (Port 4)**
B8ZS	OFF	OFF	OFF	OFF
AMI	ON	ON	ON	ON

Notes:

1. Switch section 8 (S1-8) is unused and must be off.
2. Line code is software overrideable.

T1EXT Quick Reference Summary

Transmit Functions

Major transmit functions of the T1EXT circuit pack are as follows:

a. Receives two AMI or B8ZS encoded DS1 signals from a T-line
b. Recovers DS1 and NRZ data from each DS1 signal
c. Synchronizes and maps each data signal to a VT1.5 synchronous payload envelope (SPE)
d. Inserts VT path overhead
e. Multiplexes two VT1.5 SPEs to a byte-interleaved VT-G signal
f. Provides the VT-G signal to an OLIU circuit pack.

Receive Functions

Major receive functions of the T1EXT circuit pack are as follows:

a. Receives a SONET VT-G frame synchronizing signals from its associated OLIU
b. Demultiplexes the VT-G into two VT1.5 signals
c. Terminates VT path and the embedded DS1 signal from each VT1.5 SPE
d. Desynchronizes the DS1 signals
e. Encodes each DS1 signal into either AMI or B8ZS format
f. Preequalizes (with line build out) each DS1 and provides them to a T-line as bipolar signals.

Control Functions

The major control functions of the T1EXT circuit pack are as follows:

a. Protection switching for OLIU circuit pack protection
b. VT path overhead processing
c. Internal fault detection
d. Inventory information (*CLEI* code, date of manufacture, etc.)
e. Monitors a DS1 signal with SF or ESF frame format and generates PM data.
f. Provides simplex 60mA line current.

Maintenance Signal Functions

The major maintenance signal functions are as follows:

a. Monitors DS1 signal for near-end and far-end performance
b. Detects VT path AIS
c. Inserts DS1 AIS toward fiber and toward T-line
d. Inserts and detects VT path yellow signal.

BBG19 DS3 Data Services Interface Circuit Pack Description

Purpose of Circuit

The BBG19 DS3 circuit pack provides an interface between asynchronous DS3-rate signals and SONET STS-1 signals. It provides front access to DS3 Data Services, such as Ethernet, Token Ring, ATM, FDDI, Frame Relay, and others, via BNC faceplate connectors.

BBG19 DS3 Faceplate Indicators

The BBG19 DS3 circuit pack faceplate indicators are shown in Figure 7-19.

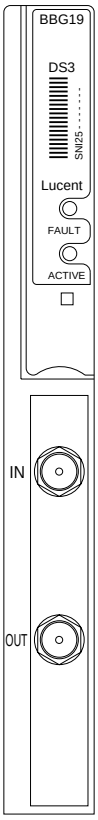

Figure 7-19. BBG19 DS3 Circuit Pack

The red FAULT LED lights by the SYSCTL on detection of BBG19 DS3 circuit pack failure. In the event of an incoming DS3 signal failure, this LED will flash on and off. The green ACTIVE LED lights when the circuit pack is active (in-service).

General Description of Operation

NOTE:
DS3 access is through a BNC connector on the faceplate.

The DS3 Data Services Interface circuit pack (BBG19) provides a mapping between a DS3 low-speed signal from a DS3 Data Services Device and an internal STS-1 signal. The BBG19 provides the same functions as the BBG4B, but provides DS3 access through two BNC connectors on the faceplate. DS3 access to the BBG4B is through BNC connectors on the rear of the shelf.

In the transmit direction, the incoming DS3 signal can be either formatted or unformatted (clear channel). The BBG19 DS3 circuit pack accepts one 44.736 Mb/s bipolar 3-zero substitution (B3ZS) coded DS3 signal. The incoming DS3 signal is mapped into an STS-1 payload envelope using SONET asynchronous mapping. The STS-1 path overhead and pointer bytes are added and the resulting signal is sent to the high-speed OLIU circuit pack.

In the receive direction, the STS-1 signal from the OLIU circuit pack goes through STS-1 pointer interpretation, and path overhead is removed and processed.

After the DS3 signal is recovered from the STS-1 payload envelope, the DS3 performance bits (P-bits) may be monitored and corrected through a provisionable violation, monitor, and removal (VMR) function.

NOTE:
Protection switching must be done externally to the FiberReach multiplexer.

The BBG19 DS3 circuit pack provides enhanced DS3 performance monitoring capabilities with FiberReach software releases 3.1 and later.

The BBG19 DS3 circuit pack provides bidirectional transport of one DS3 signal through DDM-2000 OC-3 in either CC mode, VMR mode, or VM mode, by mapping the DS3 into an STS-1 signal. The BBG19 DS3 performs maintenance and provisioning functions associated with the STS-1 and DS3 signals and provides access to the STS-1 path overhead. It interfaces to the OLIU at the STS-1 rate, to the data services device, and to the SYSCTL. When provisioned for the CC mode, the DS3 can transport any DS3 rate signal that meets specified electrical interface requirements. When provisioned for the VMR or VM mode, the DS3 signal must meet both electrical and DS3 frame format requirements.

Detailed Description of Operation

Transmission Circuitry

Transmit Direction. Figure 7-20 provides an overall block diagram of the BBG19 DS3 circuit pack. The transmit direction is the direction toward the STS-1 signal, and receive direction refers to the direction toward the data services device. In the transmit direction, the BBG19 DS3 receives an incoming B3ZS encoded DS3 signal from the data services device. BNC connectors on the faceplate of the BBG19 provide input and output for the data services signal. The BBG19 DS3 receiver performs equalization recovery. The MUX circuitry performs B3ZS decoding, optional automatic DS3 AIS insertion, and a provisionable VMR function, then synchronizes and maps the DS3 to the STS-1 rate. The DS3 signal is then synchronized to the STS-1 payload rate, STS-1 path overhead is inserted, and an STS-1 rate signal is transmitted to an OLIU pair.

Receive Direction. The BBG19 DS3 receives STS-1 data from the OLIUs, selects one STS-1, performs pointer interpretation, processes and removes the path overhead, desynchronizes the embedded DS3, provides a provisionable VMR function, and then B3ZS encodes the signal for transmission to the data services device. A jumper allows the user to insert or remove an LBO network (225 ft. of 734A-type cable equivalent) to provide the required signal level and shape at the data services device.

VMR Function

Before the DS3 signal is B3ZS-encoded (receive) or decoded (transmit), a VMR function can be provisioned via the control circuitry for one of three possible modes. These three modes are as follows:

- VMR with DS3 AIS insertion—default
- VM without removal of violations but with AIS insertion
- No violation monitoring CC mode with options for
  - AIS insertion
  - No AIS insertion.

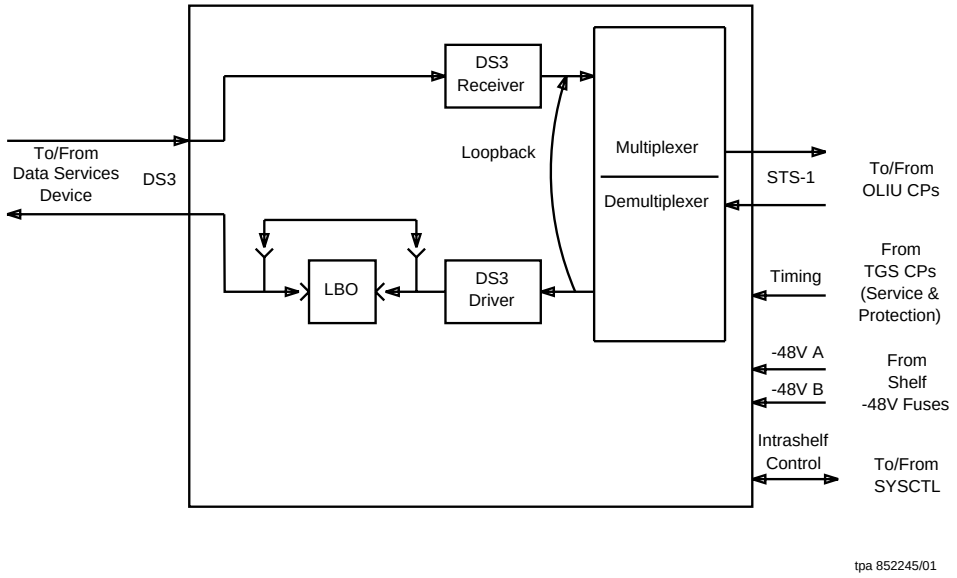

Figure 7-20. BBG19 DS3 Circuit Pack Block Diagram

Control Circuitry

The BBG19 DS3 circuit pack interfaces with the SYSCTL via the intra-shelf control bus. The BBG19 DS3 provides maintenance elements for reporting the status of the circuit pack, status of the incoming STS-1 and DS3 signals, as well as the circuit pack inventory information (*CLEI* code, date of manufacture, etc.). These maintenance elements are used by the SYSCTL for fault detection and isolation. Conversely, the BBG19 DS3 responds to control signals from the SYSCTL (such as active and fault LED controls).

Locked DS3 Circuitry

The DDM-2000 OC-3 accepts two BBG19s installed side-by-side in a dual 0x1 configuration. This configuration allows for efficient bandwidth utilization in the network for data services traffic. Each DS3 is assigned to both rotations of the ring

using the same STS-1 time slot. This dual 0x1 interface also provides route diversity for point to multi-point interconnectivity and route restoration to data networking devices utilizing the BBG19s for access to the SONET network.

Fault Detection Circuitry

The BBG19 DS3 circuit pack has in-service and out-of-service built-in test capability. In-service testing is continuous and errors are reported when they occur to the SYSCTL via the intra-shelf control bus. An out-of-service test is performed whenever the BBG19 DS3 circuit pack is inserted or recovers from a transient failure.

The incoming DS3 signal is monitored for bipolar threshold crossings in excess of 10^{-3} or 10^{-6}, LOS, DS3 OOF, and DS3 AIS. Incoming STS-1 signals are monitored for STS AIS, STS LOP, and yellow and are also monitored for DS3 OOF and AIS.

Loopbacks

Two loopbacks are provided on the BBG19 DS3. The terminal loopback bridges the DS3 desynchronizer output signal (transmitted toward the data services device) back into the DS3 synchronizer input. Operation of the loopback does not affect the signal transmitted to the data services device. The facility loopback bridges the STS-1 output signal to the OLIU back toward the data services device. Operation of this loopback does not affect the signal transmitted to the fiber. Both loopbacks are controlled by the SYSCTL through the intra-shelf control bus.

Performance Monitoring

The BBG19 DS3 circuit pack provides PM circuitry for the following performance parameters:

- STS path parameters derived from B3 coding violations
- DS3 path parameters derived from P-bit coding violations
- DS3 path parameters derived from F&M bit errors
- DS3 line errors based on B3ZS violations
- DS3 P-bit and F&M bit PM for both directions of transmission
- C-bit parity and FEBE PM for both directions of transmission.

BBG19 DS3 Hardware Settings

The location of the BBG19 DS3 circuit pack LBO jumpers is shown in Figure 7-21. The BBG19 DS3 LBO settings are shown in the table.

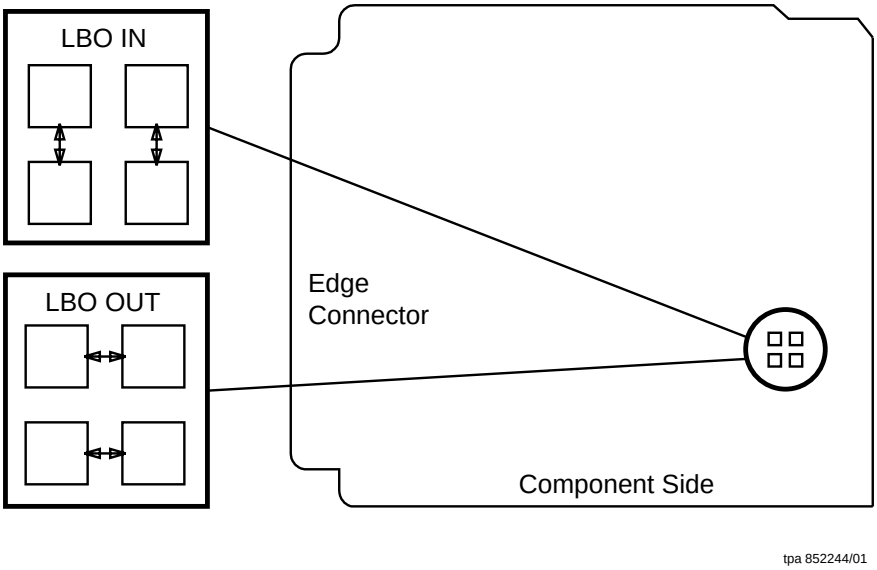

BBG19 DS3 LBO Settings

Cable Length (Ft)		LBO Setting
735A Cable	734D Cable	
0 to 125 >125 to 250	0 to 225 >225 to 450	LBO IN LBO OUT

Figure 7-21. BBG19 DS3 Line Build-Out (LBO) Jumpers

Power Circuitry

The BBG19 DS3 circuit pack receives two sources of –48 volts that are in turn diode ORed, fused, and filtered before conversion to +5 volts to power the rest of the circuit pack. A failure of the fuse or converter causes the red FAULT LED to light.

BBG19 DS3 Quick Reference Summary

Transmit Functions

The BBG19 DS3 transmit functions are as follows:

- Receives a B3ZS-encoded DS3 signal from a data services device
- Recovers DS3 and NRZ data
- Optionally checks and/or corrects P-bit parity errors
- Synchronizes the data signal to STS-1 signal rate
- Inserts STS-1 path overhead
- Provides the STS-1 signal to the OLIU circuit packs.

Receive Functions

The following receive functions are performed by the BBG19 DS3 circuit pack:

- Desynchronizes the incoming STS-1 signal
- Terminates the STS-1 path
- Optionally checks and/or corrects P-bit parity errors
- B3ZS encodes the outgoing DS3 signal
- Preequalizes the DS3 signal (with LBO) and transmits it to a data services device.

Control Functions

The major control functions are as follows:

- STS-1 path overhead processing
- Internal fault detection
- Inventory information (*CLEI* code, date of manufacture, etc.).

Maintenance Signal Functions

The major maintenance signal functions are as follows:

- Detects STS-1 path AIS coming from the fiber
- Detects STS-1 path unequipped signal coming from the fiber
- Inserts DS3 AIS toward the fiber and data services device
- Detects DS3 AIS coming from the fiber
- Inserts and detects STS-1 path yellow signal to/from the fiber
- Detects DS3 OOF from the fiber
- Detects DS3 B3ZS violation threshold crossings from the data services device
- Inserts and detects STS-1 path trace.

BBF8 High Data-Rate Digital Subscriber Line (HDSL)

Purpose of Circuit

The HDSL circuit pack (BBF8) provides HDSL interface capability on the DDM-2000 FiberReach shelf to compatible *PairGain** equipment at the customer premises. It allows the transport of T1 payloads, for up to 12,000 feet, over two metallic 24 AWG twisted-pair lines.

NOTE:
This capability is provided when the FiberReach shelf is equipped with a 28-type OLIU in the Main slots.

The BBF8 circuit pack fits into the low-speed slots and provides two, four-wire HDSL interfaces. Each interface provides a full DS1 payload capacity mapped to a SONET VT1.5 and then VT cross-connected into an STS-1. Once in SONET, the DS1 payload is treated as a normal DS1.

NOTE:
A maximum of three BBF8 HDSL circuit packs, including a protection circuit pack, can be installed in one FiberReach shelf if 28-type OLIUs are used.

HDSL Faceplate Indicator

The HDSL circuit pack FAULT indicator is shown in Figure 7-22. This red FAULT LED is lit by the SYSCTL on detection of an HDSL circuit pack failure. In the event of an incoming signal failure, this LED flashes on and off.

* *PairGain* is a registered trademark of PairGain Technologies, Inc.

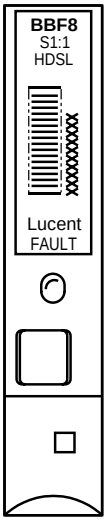

tpa 852341/01

Figure 7-22. BBF8 HDSL Circuit Pack

General Description of Operation

Figure 7-23 provides an overall block diagram of the HDSL circuit pack. The BBF8 circuit pack provides an HDSL interface capability on the DDM-2000 FiberReach Multiplexer. HDSL is an access technology that allows the transport of DS1 payloads over metallic twisted pairs. This technology performs an inverse multiplexing function which splits the DS1 payload into two 784 Kb/s data streams. These two data streams are combined at the far-end to reconstruct the original DS1 payload. Both directions of transmission are carried on each twisted pair.

HDSL is a point-to-point transmission technology between two nodes. One of the nodes (master) is responsible for establishing communications over the *PairGain* proprietary embedded operations channel (EOC). The EOC is required for synchronizing the two HDSL data streams as well as providing OAM&P between the two nodes. The other node (slave) may only retrieve or view these parameters. In each pair of HDSL nodes there must be one master and one slave.

The HDSL signal format used by the BBF8 is compatible with *PairGain* HDSL equipment. Since the BBF8 circuit pack does not provide line powering, the far-end *PairGain* HDSL equipment must be externally powered.

Detailed Description of Operation

Transmission Circuitry

The BBF8 fits into a low-speed slot and provides two, four-wire (2 pair) HDSL interfaces. These interfaces are compatible with *PairGain* HDSL equipment which may be located up to 12,000 feet away. A 2B1Q line code is used on each transmission pair. Each interface provides a full DS1 payload capacity which is mapped to a SONET VT1.5. The HDSL overhead is in a *PairGain* proprietary format and can only be terminated by equipment capable of processing this information. As with the BBF1B (Quad DS1) circuit pack, a 28-type must be used in the DDM-2000 FiberReach shelf to perform a VT cross-connect function. Once in SONET, the DS1 payload is treated as a normal DS1.

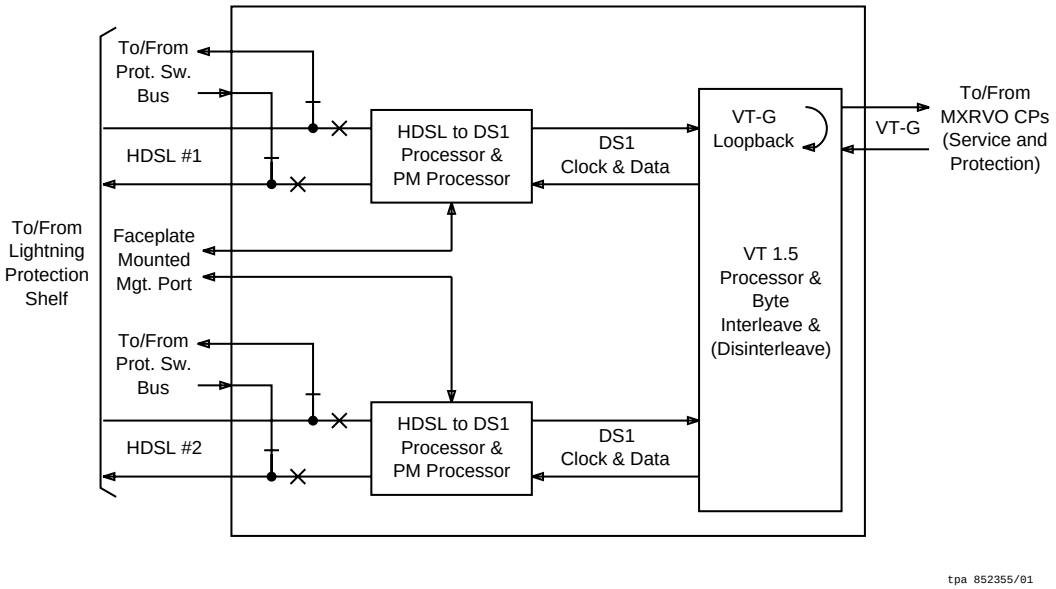

Figure 7-23. HDSL Circuit Pack Block Diagram

The distance limitations for HDSL are based on a maximum signal attenuation of 35 dB. Since signal attenuation decreases as the cable gauge (number) decreases, the lower the gauge the greater the length the HDSL can be extended. Table 7-7 identifies and lists these distances, as well as indicates the loss on the line, in dB per feet, at 196 kHz.

Due to the increased power needs of the BBF8, only three BBF8 circuit packs (including protection) may be used in a function group. Powering for these packs is provided by the 28-type in the FiberReach shelf. Pack mixing with Quad DS1/T1 EXT circuit packs is not recommended. The HDSL interfaces do not support line powering. The BBF8 is compatible with DDM-2000 FiberReach Release 2.2 and later.

Table 7-7. HDSL Line Specifications

Cable Gauge	Loss at 196 kHz dB/ft.	Ohms per kft	Maximum Loop for 35 dB Loss	Ohms at Maximum Length
26/0.40 mm	3.880	83.3	9.0 kft/2.75 km/1.7 mi	750
24/0.51 mm	2.841	51.9	12.3 kft/3.75 km/2.3 mi	638
22/0.61 mm	2.177	32.4	16.1 kft/4.9 km/3.0 mi	520
19/0.91 mm	1.535	16.1	22.8 kft/6.95 km/4.3 mi	367

Control Circuitry

The HDSL circuit pack interfaces with the SYSCTL over the intra-shelf control bus. Redundancy in the intra-shelf control bus assures the level of control required to perform protection switching and alarming of a faulty circuit pack. The HDSL provides maintenance elements for reporting the status of the circuit pack and the incoming VT1.5 and HDSL signals, as well as the circuit pack inventory information (*CLEI* code, date of manufacture, etc.). These maintenance elements are used by the SYSCTL for fault detection and isolation. Conversely, the HDSL responds to control signals from the SYSCTL (such as FAULT LED control). The PM processor collects information from the framing circuitry and generates DS1 PM parameters which are stored in the HDSL pack. Access to the PM information is via a faceplate-mounted connector. Each connector supports two RS-232 interfaces (one for each HDSL port). The port is accessed by using a cable supplied with the circuit pack.

Protection Circuitry

Optional 1xN revertive HDSL circuit pack protection is provided, and this protection is independent of the 28-type circuit pack. The HDSL protection switch points are implemented with on-board relays on the HDSL side and with logic selectors at the VT-G level on the active and standby 28-type circuit packs. The SYSCTL controls these relays through two serial interfaces so that a failure of one serial interface to the HDSL does not prevent control of the relays. If +5V power on the HDSL fails, the relays default to the protection state.

Shorting contacts are provided in the HDSL backplane connector so that when the circuit pack is removed, the HDSL cable pairs short through to the protection bus.

CAUTION:
Unused low-speed interface slots within a partially equipped group must be equipped with 177A Retainer cards if HDSL protection is used. Failure to do so may result in corrupted transmission. The HDSL circuit pack is not recommended to be mixed with the BBF1B/3Bs.

When a HDSL circuit pack is inserted, the relays are in the protection state until the SYSCTL determines that the circuit pack is good.

Fault Detection Circuitry

The HDSL circuit pack has in-service and out-of-service built-in test capability. In-service testing is continuous and errors are reported when they occur to the SYSCTL via the intra-shelf control bus. An out-of-service test is performed whenever the HDSL circuit pack is inserted or recovers from a transient failure. The incoming HDSL signal is monitored for HDSL synchronization errors. Incoming VT1.5 signals are monitored for VT AIS, VT LOP, and yellow.

Loopbacks

The HDSL circuit pack has two types of loopback, terminal and facility. Both types are controlled by the SYSCTL via the intra-shelf control bus. The two loopbacks must be done independently.

The terminal loopback is provided on the HDSL circuit pack for each HDSL interface. The loopback is done inside the VT1.5 processor device and bridges the desynchronizer output signal (transmitted toward the far-end HDSL equipment) back to the DS1 synchronizer input. When the loopback is operated, the DS1 interface device forces AIS toward the far-end HDSL equipment.

The facility loopback is provided for both HDSL signals on the circuit pack. When this loopback is completed, all DS1 data signals received from the VT1.5 processor are simultaneously looped back toward the far-end HDSL equipment. The loopback is a bridge, so the transmitted DS1 signals (toward the high-speed interface) are not affected.

Optional HDSL Settings

All system settings are stored in NVRAM at the unit designated as the system Master. Access to these settings is through the RS-232 faceplate port only. These settings are downloaded to the slave unit at system synchronization and at regular intervals during operation to keep the slave unit updated. The NVRAM is guaranteed to have a capability of 1,000 write cycles. The current state of loopbacks is not considered a system setting, and an active loopback becomes inactive during system resynchronization. Provisioning is not available at either the slave unit or doubler units. The following system settings are available:

- Smartjack Loopback Code Detection: ENABLE or DISABLE

- Special Loopback Code Detection: A1LB, A2LB, A3LB, A4LB, or A5LB
- Errored Second Threshold: NONE, 17, or 170 per 24 hours
- Loopback Time-out: NONE, 20, 60, 120 minutes
- Alarm Notification: ENABLE or DISABLE
- Allocation of DS0 time slots on HDSL loop: ALTERNATE or CONTIGUOUS
- Margin Alarm Threshold: 0-15 dB, 1 dB increments
- DS0 blocking: individually (T1, FT1)
- Fast Loss of Sync Word (LOSW): ENABLE or DISABLE.

Performance Monitoring

From any unit in a system, HDSL performance data may be accessed for each HDSL span in the circuit, including up to two HDSL doublers (three total HDSL spans). Access to all PM data is through the faceplate RS-232 port only. Any unit provides access to the following:

- HDSL Span Current Status:
  - Alarms
  - Loopbacks
  - Margins
  - HDSL Pulse Attenuation
  - HDSL clock offset (PPM)
  - 24-hour HDSL Errored Seconds
  - 24-hour HDSL Unavailable Seconds.
- HDSL Span History:
  - 15-min, 24-hour, 7-day HDSL Errored Seconds
  - 15-min, 24-hour, 7-day HDSL Unavailable Seconds.
- HDSL Alarm History
  - LOSW, HDSL1 - Loss of Sync on Loop 1
  - LOSW, HDSL2 - Loss of Sync on Loop 2
  - ES, HDSL1 - Exceeded ES Threshold on Loop 1
  - ES, HDSL2 - Exceeded ES Threshold on Loop 2
  - Margin, HDSL1 - Exceeded Threshold on Loop 1
  - Margin, HDSL2 - Exceeded Threshold on Loop 2.

Power Circuitry

The 28-type circuit packs supply +5V power to the HDSL circuit packs in the corresponding DS1PM circuit pack groups. These inputs are diode ORed and the output is fused and then filtered before it is used to power the rest of the circuit pack. A failure of the fuse or converter causes the red FAULT LED to light.

CAUTION:
For power reliability, when a muldem is equipped with HDSL circuit packs, the associated function unit must be equipped with two 28-type circuit packs.

Figure 7-24 and its associated table show HDSL options selectable via S1.

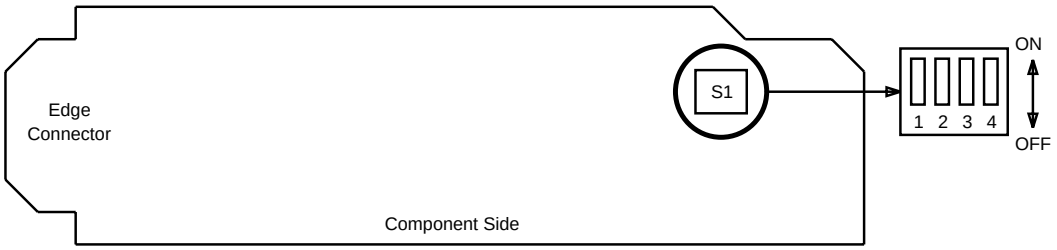

Figure 7-24. HDSL DIP Switch Settings

HDSL DIP Switch Settings					
HDSL Options		DIP Switch Settings			
		HDSL Port #1		HDSL Port #2	
		S1-1	S1-2	S1-3	S1-4
HDSL	Master	—	OFF	—	OFF
START-UP	Slave	—	ON	—	ON
HDSL	Local	OFF	—	OFF	—
MANAGEMENT	Through	ON	—	ON	—

HDSL Quick Reference Summary

Communication Functions

Major transmit (Xmit) and receive (Rcv) functions of the HDSL circuit pack are as follows:

- Multiplexes four VT1.5 SPEs to a byte-interleaved VT-G signal (Xmit)
- Provides the VT-G signal to a 28-type circuit pack (Xmit)
- Inserts VT path overhead (Xmit)
- Receives up to two HDSL formatted signals (Xmit)
- Provides HDSL to VT1.5 mapping (Xmit)
- Recovers DS1 and NRZ data from each HDSL payload (Xmit)
- Synchronizes and maps each data signal to a VT1.5 SPE (Xmit)
- *PairGain* compatible, 4-wire HDSL
- Bi-directional transmission port of 1.544 Mb/s over twisted pair
- Loopback options
- Receives SONET VT-G frame synchronizing signals from its associated 28-type
- Demultiplexes the VT-G into four VT1.5 signals (Rcv)
- Terminates VT path and the embedded DS1 signal from each VT1.5 SPE (Rcv)
- Desynchronizes the DS1 signals and maps directly into *PairGain* HDSL (Rcv).

Control Functions

The major control functions of the HDSL circuit pack are as follows:

- Protection switching for 28-type circuit packs
- VT path overhead processing
- Internal fault detection
- Inventory information (*CLEI* code, date of manufacture, etc.).

Maintenance Signal Functions

The major maintenance signal functions are as follows:

- Monitors a DS1 signal with SF or ESF frame format and generates PM data
- Monitors DS1 signal for near-end and far-end performance
- Detects VT path AIS
- Inserts DS1 AIS toward fiber and far-end HDSL equipment
- Inserts and detects VT path yellow signal.

Transmission - Optical Interface

Universal Optical Connectors

Circuit packs having a "-U" after their designation indicate that these circuit packs have a universal optical connector.

The following circuit packs are available with the connector:

- 22D-U OLIU
- 22F/22F-U/22F2-U
- 22G-U/22G2-U/22G3-U/22G4-U* OLIU
- 26G2-U OLIU
- 28G-U/28G2-U OLIU
- 29G-U/29H-U* OLIU

*Ship with SC buildout and ST shipped loose with each pack except 22G-U. The only ST-type connector that applies and is shipped for 22G-U is for the faceplate.

This connector (Figure 7-25) is a two-part connector consisting of a faceplate-mounted block and an optical buildout. The faceplate block optionally supports an ST, SC, or FC-type optical buildout.

A 0 dB *SC*-type connector is shipped as standard with OLIU. Optional ST 0 dB buildouts are shipped loose with each OLIU except for 22G-Us. Optional SC, ST, or FC-PC 0 dB or attenuated buildouts can be ordered separately. See Chapter 10, "Technical Specifications," for a list of universal buildout attenuators. All OLIUs will phase to SC buildout mounted and ST shipped loose.

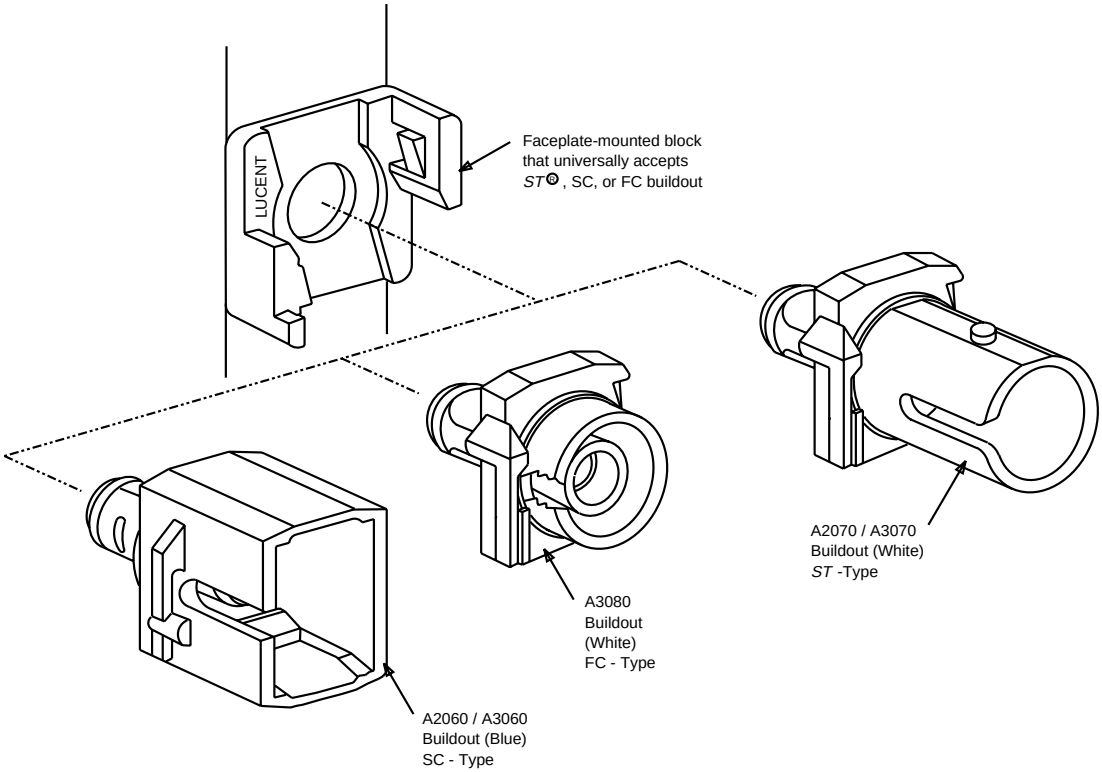

Figure 7-25. Universal Optical Connector

Optical Interface Circuit Packs

Table 7-8 lists the FiberReach OLIU Feature Summary.

Table 7-8. FiberReach OLIU Feature Summary

OLIU	Line Rate (Mb/s)	Span Length (Km)	VT/STS Sig. Degrade PS	TSI	Fiber Type	Ext. Atten.	System	See Note
22D-U	155.52	< 3	Yes	STS-1	MM	No	OC-3	
22F	155.52	33	No	STS-1	SM/MM	No	OC-3	1,2,3
22F-U	155.52	33	No	STS-1	SM/MM	No	OC-3	2
22F2-U	155.52	33	Yes	STS-1	SM/MM	No	OC-3	
22G-U	155.52	51	Yes	STS-1	SM/MM	7.0 dB	OC-3	2,3
22G2-U	155.52	51	Yes	STS-1	SM/MM	No	OC-3	2,3
22G3-U	155.52	55	Yes	STS-1	SM/MM	No	OC-3	
22G4-U	155.52	55	Yes	STS-1	SM/MM	No	OC-3	
26G2-U	51.84	44	Yes	STS-1/VT1.5	SM/MM	13.8 dB	FiberReach/ OC-1	3
28G-U	51.84	44	Yes	STS-1/VT1.5	SM/MM	13.8 dB	FiberReach/ OC-1/OC-3	3
28G2-U	*	*	Yes	STS-1/VT1.5	SM/MM	*	FiberReach/ OC-1,3	
29G-U	622.08	51	Yes	STS-1/VT1.5	SM/MM	10 dB	OC-1,3	
29H-U	622.08	94	Yes	STS-1/VT1.5	SM	10 dB	OC-1,3	
See notes on following page.								

* Information not available at time of document release.

Notes:

1. OLIU has two sets of optical interfaces.
2. OLIU is discontinued. Functionally equivalent alternatives are available or planned.
3. OLIU has extended TSI capabilities to support pass-through and hairpin cross-connections for OC-1 rings terminated in function units of a DDM-2000 OC-3.

All OLIUs have universal optical connectors (compatible with ST, SC, and FC connectors) unless specified otherwise.

All OLIUs operate at 1310 nm (nominal), except 29H-U.

All OLIUs have one optical transmitter and one optical receiver unless specified otherwise.

The “Span Length” column shows maximum span length for single mode fiber in controlled environment, based on certain assumptions about loss budget. (See “Technical Specifications,” Chapter 10.)

The “VT/STS Sig. Degrade PS” column indicates which OLIUs support VT1.5 path protection switching based on signal degrade conditions on individual VT1.5 channels. These OLIUs also support path protection switching based on STS signal degrade and VT unequipped conditions.

The “TSI” column indicates what type of cross-connection (time slot interchange) capability is supported by each OLIU.

The “Fiber Type” column indicates whether the OLIU is compatible with single-mode fiber, multimode fiber, or both.

The “Ext. Atten.” column indicates whether an external attenuator is required for optical loopbacks and short span lengths. “No” indicates none required. A dB value indicates the minimum attenuation required.

The “System” column indicates whether the OLIU can be used in the DDM-2000 OC-3 system or FiberReach system.

22-Type OLIU Circuit Pack Descriptions

Purpose of Circuits

The 22-type OLIU circuit packs (22D-U, 22F/22F-U/22F2-U, and 22G-U/22G2-U/22G3-U/22G4-U) perform the optical/electrical conversion between optical carrier level 3 (OC-3) and STS-3 signals, multiplexing between STS-3 and three STS-1 signals and accessing SONET transport overhead. These circuit packs also provide routing of STS-1 signals between the OC-3 interface and main slots in the shelf.

The 22D-U OLIU offers short reach service over multimode fiber.

The 22F-type OLIUs offer intermediate reach service over multimode or single-mode fiber.

The 22G-type OLIUs offer higher power optics than the other 22-type OLIUs. The 22G2-U/22G3-U/22G4-U OLIUs offer improved receiver overload sensitivity, eliminating the need for an external attentuator. The 22G3-U and the 22G4-U use a SONET-compliant long-reach transmitter.

In the FiberReach shelf, these circuit packs are used in the function unit slots only, and may only be used when the main slots are equipped with OC-3 or OC-12 OLIUs.

22-Type Faceplate Indicators

Examples of the 22-type OLIU circuit pack faceplate indicators are shown in Figure 7-26 (22D-U), Figure 7-27 (22F-U), and Figure 7-28 (22G-U).

The red FAULT LED lights on detection of circuit pack hardware failure. In the event of an incoming signal failure, this LED will flash on and off. The green ACTIVE LED lights when the circuit pack is active (carrying service).

A faceplate-mounted universal optical connector allows the 22D-U OLIU to accept fiber terminated with ST, SC, or FC connectors. The 22D-U and the 22G2-U/22G3-U/22G4-U OLIUs come with a 0 dB ST buildout. For the 22D-U and the 22G-U OLIUs, a 10 dB attenuator is required for loopback testing. The 22G2-U/22G3-U/22G4-U OLIUs do not need an external attentuator for loopback testing.

The 22D-U OLIU circuit pack provides cost effective interconnect for intra-office applications and is used only for DDM-2000 OC-3 and OC-12 or *SLC*-2000 interworking over multimode fiber.

Various combinations of buildouts and connectors are also available. See Chapter 10, "Technical Specifications," for a list of universal buildout attenuators.

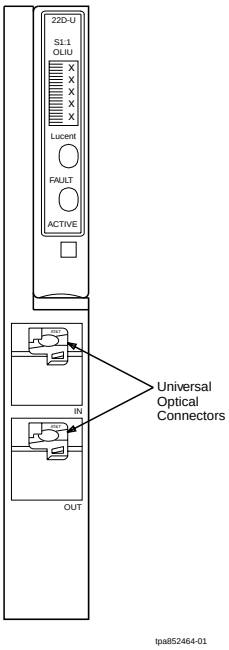

Figure 7-26. 22D-U OLIU Circuit Pack

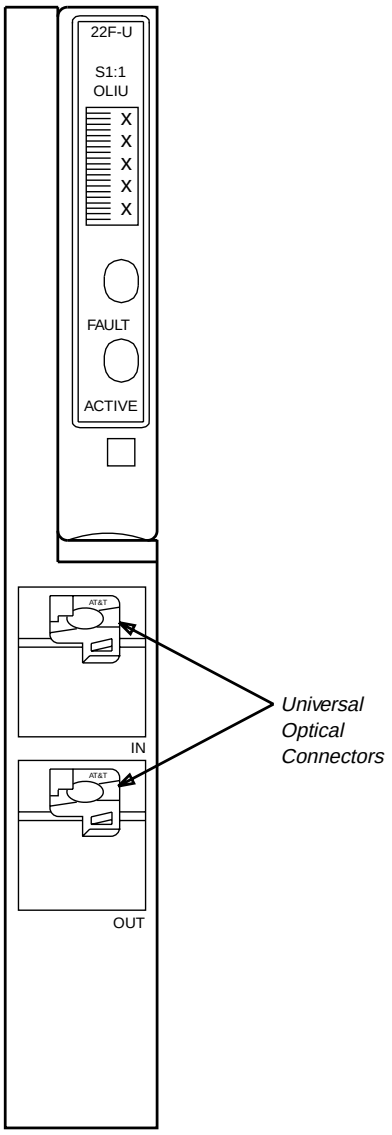

Figure 7-27. 22F-U OLIU Circuit Pack

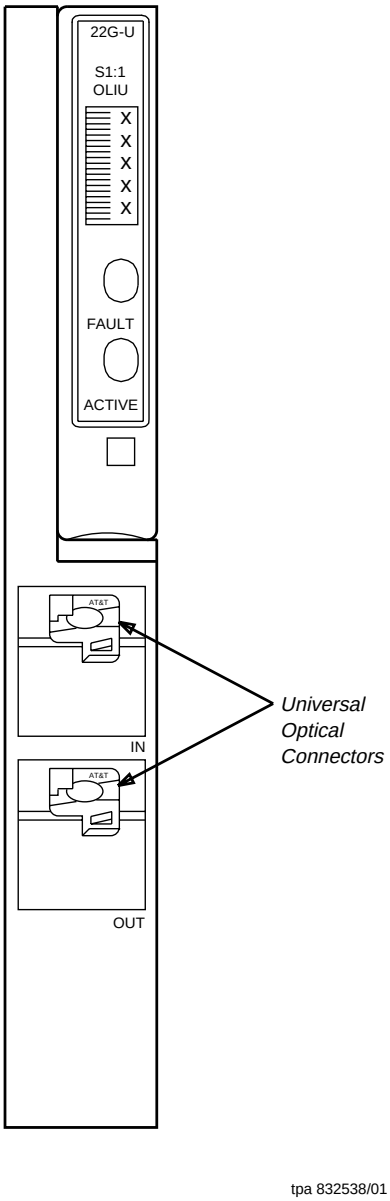

Figure 7-28. 22G-U OLIU Circuit Pack

General Description of Operation

The 22-type OLIUs multiplex three STS-1 signals to an STS-3, insert the SONET transport overhead bytes (line and section), and scramble the resulting signal. For the 22D-type OLIU, this STS-3 signal drives the LED transmitter to create an IS-3 output. For the 22F-type and the 22G-type OLIUs, this STS-3 signal drives the laser transmitter to create the OC-3 output.

The received IS-3 or OC-3 signal is converted back to an electrical STS-3. This STS-3 is descrambled and demultiplexed into three STS-1 signals, and transport/path overhead is accessed. Some of the overhead (for example, section datacom channel) is passed via serial data links to the control packs, while other bytes (for example framing, parity check) are processed on-board. The STS-1 signals go through a pointer processor to guarantee STS-1 frame alignment before being routed to the main slots.

For 22D-type OLIUs, the output must interface with multimode fiber.

For 22F-type OLIUs, fiber access is via a pair of *ST* lightguide cable connectors from the OLIU faceplate. The 22F-type OLIU photonics comply with SONET intermediate-reach specifications.

Detailed Description of Operation

Figure 7-29 is a block diagram of the 22-type OLIU circuit pack.

Transmission Circuitry

STS-1 Cross Connect. The STS-1 cross connect is used to select STS-1s for both the transmit and receive directions.

Transmit Direction. The STS-1 cross connect connects three of the STS-1 signals from the main slots. The multiplexer takes the three STS-1 signals, adds SONET transport overhead, then byte-interleaves and scrambles the signal with a frame synchronous scrambler. The output from the multiplexer is in the SONET STS-3 format and is used to amplitude modulate the LED transmitter, converting the electrical signal to an NRZ-encoded SONET compatible IS-3 optical signal for 22D-U and an OC-3 optical signal for 22F-types and 22G-types.

Receive Direction. For all 22-type OLIUs, in the receive direction the optical receiver converts the light pulses from an NRZ-encoded OC-3 or IS-3 signal to equivalent electrical pulses. The demultiplexer circuit accepts the STS-3 bit stream, frames on the incoming signal, descrambles it, demultiplexes it into three STS-1 signals, and processes OC-3 or IS-3 transport overhead. The overhead information is sent to the SYSCTL circuit pack via the intra-shelf control bus.

The STS-1 outputs from the demultiplexer are sent to the STS-1 pointer processor which performs pointer interpretation and generation on each received STS-1. The output of the STS-1 pointer processor is three STS-1 signals, frame synchronous to each other. STS-1s are passed through without STS-1 path overhead termination. The cross connect sends each of the three STS-1 signals to the function unit slots.

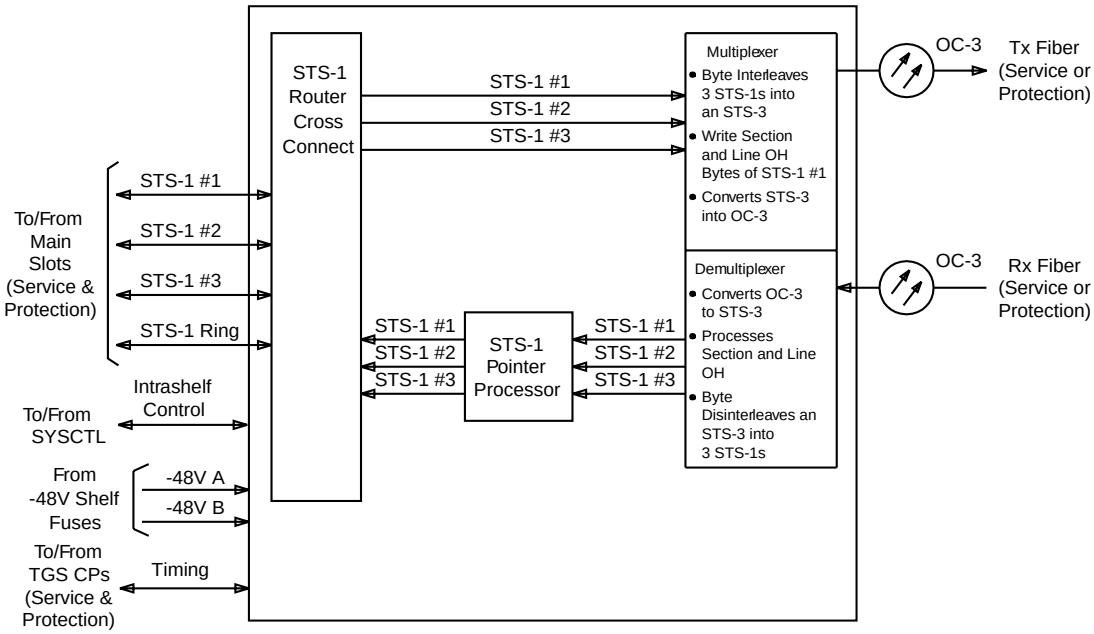

Figure 7-29. 22-Type OLIU Circuit Pack Block Diagram

Control Circuitry

The 22-type OLIU circuit packs interface with the BBG8/BBG8B SYSCTL circuit pack in the FiberReach shelf.

The 22-type OLIU circuit packs provide maintenance elements for reporting the status of the circuit pack, status of the incoming optical and electrical signals, as well as inventory information (*CLEI* code, date of manufacture, etc.). These maintenance elements are used by the SYSCTL for fault detection and isolation. Conversely, the 22-type OLIU circuit packs respond to control signals from the SYSCTL, such as STS-1 routing, protection switching, and LED control commands.

The 22D-U OLIU circuit pack accesses the SONET transport overhead and routes it via the transport overhead channel interface to the SYSCTL.

Protection Circuitry

The 22-type OLIU circuit packs operate in the unprotected (0x1) configuration only in the FiberReach shelf.

Fault Detection Circuitry

The 22-type OLIU circuit packs have in-service and out-of-service built-in test capability. In-service testing is continuous and errors are reported when they occur to the SYSCTL via the intra-shelf control bus. An out-of-service test is performed whenever the OLIU circuit pack is inserted or recovers from a transient failure.

Performance Monitoring

The 22-type OLIUs provide PM circuitry for OC-3 and IS-3 performance parameters.

Power Circuitry

Power for the 22D-U OLIU circuit pack is provided by a DC-to-DC converter located on the circuit pack. The converter supplies +5 volts and –5.2 volts.

Power for the 22F-type OLIU circuit packs is provided by two DC-to-DC converters located on the circuit pack. One converter supplies +5 volts and the other supplies –5.2 volts.

Power for the 22G-type OLIU circuit packs is provided by two DC-to-DC converters located on the circuit pack. The converters supply +5 volts.

For all 22-type OLIUs, both A and B –48 volt backplane busses supply power to the converter through diode ORed circuit pack-mounted power select circuits and a circuit pack-mounted fuse. Failure of the fuse or converter causes the red FAULT LED to light.

22-Type OLIU Quick Reference Summary

Transmit Functions

Major transmit functions of the 22-type OLIU circuit packs in the FiberReach application are as follows:

- Select STS-1 inputs from main OLIU circuit packs
- Provide STS-1 signal cross-connections
- Add SONET transport overhead
- Byte-interleave and scramble the three selected STS-1 signals to produce an STS-3 signal
- For 22D-U, convert the STS-3 electrical signal to an IS-3 optical signal and transmit it over the fiber
- For 22F-type and 22G-type, use a laser transmitter to produce a SONET standard OC-3 optical signal from an STS-3 electrical signal.

Receive Functions

The following are major receive functions of the 22-type OLIU circuit packs:

- For 22D-U, receive an IS-3 optical signal and convert it to an electrical STS-3 signal
- For 22F-type and 22G-type, receive a SONET standard OC-3 optical signal and convert it to an electrical STS-3 signal
- Extract STS-3 clock and retime the received data
- Demultiplex the STS-3 signal into three STS-1 signals
- Extract transport overhead
- Process the STS-1 pointer and frame-synchronize the STS-1 signals
- Provide STS-1 signal cross-connections.

Control Functions

The major control functions of the 22-type circuit packs are as follows:

- Process transport overhead
- Store inventory information (*CLEI* code, date of manufacture, etc.)

Maintenance Signal Functions

The major maintenance signal functions of the 22-type circuit packs are as follows:

- Insert STS-1 path AIS
- For 22-type, insert and detect OC-3/IS-3 line AIS
- Insert path unequipped signal
- Insert and detect line FERF
- For 22-type, detect OC-3/IS-3 line failures (LOS, LOF, AIS, and BER)
- For 22-type, detect OC-3/IS-3 line signal degrade BER.

26G2-U OLIU Circuit Pack Description

Purpose of Circuit

The 26G2-U OLIU circuit pack interfaces with a 1310 nm optical line in the transmit and receive directions. It provides an interface between the OC-1 optical line and the electrical STS-1 and VT-G signals. The fiber is accessed via a pair of universal optical connectors on the 26G2-U faceplate that supports ST, SC, and FC type optical connectors. Both single mode and multi-mode facilities are supported.

The 26G2-U OLIU circuit pack also has the following functions:

- Active VT timeslot interchanging in the function slot
- Access to low speed slots and main slots from the function slot.

The 26G2-U OLIU may be used in the main slots of the DDM-2000 FiberReach wideband shelf or the function unit slots of the DDM-2000 OC-3 shelf (Group 4 or later).

26G2-U OLIU Faceplate Indicators

The 26G2-U OLIU circuit pack faceplate indicators are shown in Figure 7-30. The red FAULT LED lights on detection of circuit pack hardware failure. In the event of an incoming OC-1 signal failure, this LED will flash on and off. The green ACTIVE LED lights when the circuit pack is active (carrying service).

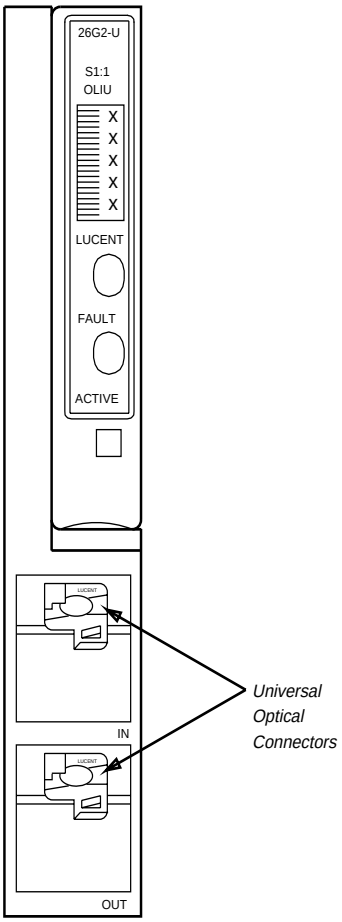

Figure 7-30. 26G2-U OLIU Circuit Pack

A faceplate-mounted universal optical connector allows the 26G2-U OLIU to accept fiber terminated with ST, SC, or FC connectors. A 10 dB attenuator is required for loopback testing. The 26G2-U OLIU operates over single mode fiber. Various combinations of buildout attenuators and connectors are also available. See Chapter 10, "Technical Specifications," for a list of universal buildout attenuators.

General Description of Operation

The 26G2-U circuit pack accepts eight VT-G signals from the DS1 circuit packs, performs protection switch selections, combines the selected signals to form an STS-1 signal, inserts STS-1 path overhead, inserts SONET transport overhead bytes (line and section) and STS path overhead bytes, and scrambles the resulting signal which drives a separate laser transmitter to create an OC-1 output.

The 26G2-U circuit pack converts a received OC-1 signal back to an electrical STS-1, descrambles and demultiplexes it, and processes the transport overhead. It sends some of the overhead (for example, section data communications channel) via serial data links to the control packs, and processes other bytes (for example framing, parity check) on board. It performs STS-1 pointer processing to guarantee STS-1 frame alignment and STS-1 path overhead and VT1.5 pointer processing. The 26G2-U then performs VT1.5 TSI, multiplexes four VT1.5 signals to VT-Gs, and sends the VT-Gs to the low-speed slots.

On the wideband shelf, the 26G2-U OLIU provides an interface of eight VT-G signals in the OC-3 shelf. These groups are multiplexed into an STS-1 signal. A VT1.5 cross-connect allows VT1.5 switching as required.

Detailed Description of Operation

Figure 7-31 is a block diagram of the 26G2-U OLIU circuit pack.

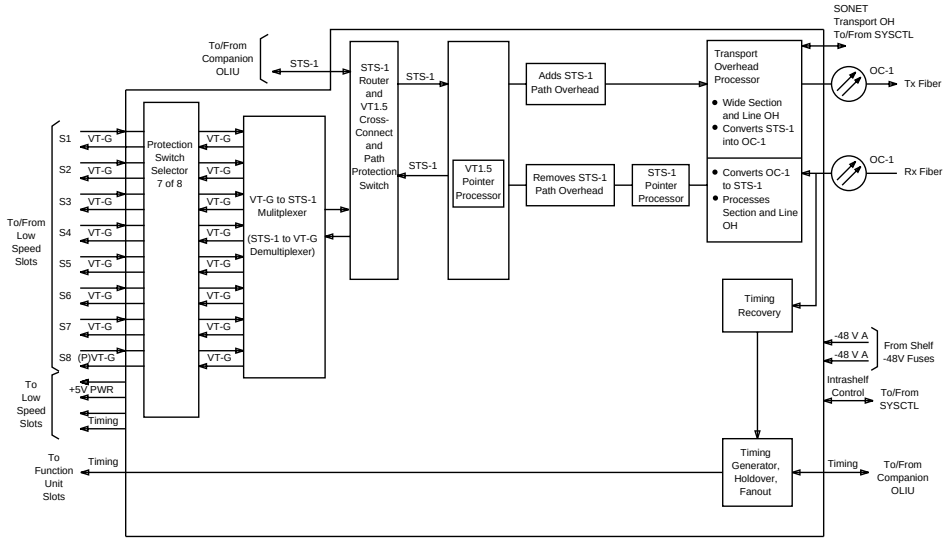

Figure 7-31. 26G2-U OLIU Circuit Pack Block Diagram

Transmission Circuitry

STS-1 Router and VT1.5 Cross-Connect. The STS-1 router is used to select STS-1s for both the transmit and receive directions. All incoming STS-1s are fed to the VT1.5 cross-connect. The outgoing STS-1 may be sourced by this VT1.5 cross-connect or sourced directly by an STS-1 input.

Transmit Direction. In the transmit direction (from the low-speed slots toward the optical interface), the VT-G signals from the low-speed slots are combined into an STS-1 signal. SONET path overhead is then added to STS-1 sourced by the VT1.5 cross-connect before the signals are sent to the transport overhead processor. The transport overhead processor takes the STS-1 signal, adds SONET transport overhead, then scrambles the signal with a frame synchronous scrambler. The output from the transport overhead processor is in the SONET STS-1 format and is used to modulate the amplitude of the laser transmitter, converting the electrical signal to an NRZ-encoded SONET compatible OC-1 optical signal.

In the OC-3 shelf, the 26G2-U OLIU provides an interface between the STS-1 optical signal and electrical VT-G signals. Three STS-1 paths will be brought out to

the backplane for STS-1 routing throughout the OC-3 shelf. The 26G2-U also provides an STS-1 electrical interface to a companion 26G2-U OLIU which allows the two OLIUs to be cross coupled.

Receive Direction. In the receive direction, the optical receiver converts the light pulses from an NRZ-encoded OC-1 signal to equivalent electrical pulses. The output from the optical receiver goes into a recovery device. The transport overhead processor circuit accepts the STS-1 bit stream, frames on the incoming signal, descrambles it, and processes OC-1 transport overhead. The overhead information is sent to the SYSCTL circuit pack.

The STS-1 output from the transport overhead processor is sent to the STS-1 pointer processor which performs pointer interpretation and generation. The output of the STS-1 pointer processor is sent to the VT1.5 pointer processor. STS-1 path overhead and VT1.5 pointer processing is performed. STS-1s that do not require VT1.5 cross-connections are passed through without VT1.5 pointer processing or STS-1 path overhead termination. The output from the VT1.5 pointer processor is sent to the STS-1/VT1.5 router. The router cross-connects the appropriate VT1.5 tributaries and sends two STS-1 signals to the appropriate Main or Function Unit (MFU) slots and up to 8 VT-Gs to the low-speed slots.

The 26G2-U terminates an STS-1 optical signal, converts it to an electrical signal, frames on and descrambles the signal, and processes the Transport Overhead (TO).

Control Circuitry

The 26G2-U OLIU circuit pack interfaces with the BBG8/BBG8B system controller (SYSCTL) via the intershelf control interface. The 26G2-U OLIU provides maintenance elements for reporting the status of the circuit pack, status of the incoming optical and electrical signals, as well as inventory information (*CLEI* code, date of manufacture, etc.). These maintenance elements are used by the SYSCTL for fault detection and isolation. Conversely, the 26G2-U OLIU responds to control signals from the SYSCTL such as STS-1 routing, VT1.5 routing, protection switching, and LED control commands.

The 26G2-U OLIU accesses the SONET transport overhead and routes it to and from the SYSCTL circuit pack.

Protection Circuitry

STS-1 and VT1.5 path protection switching, compliant with SONET specifications, is provided. The 26G2-U OLIU is protection switched by the SYSCTL in response to an external command, incoming optical signal failure, or internal equipment fault. The 26G2-U OLIU circuit pack is protection switched by the SYSCTL when the SYSCTL detects a fault on the active 26G2-U OLIU, and the companion 26G2-U OLIU is good.

The 26G2-U OLIU interfaces via VT-G signals with circuit packs in the low-speed slots and via STS-1 signals with the circuit packs in the main and function unit slots. It selects the signals from the service or protection slot of each pair as directed by the SYSCTL.

Fault Detection Circuitry

The 26G2-U OLIU circuit pack has in-service and out-of-service built-in test capability. In-service testing is continuous, and errors are reported when they occur to the SYSCTL via the intrashelf control bus. An out-of-service test is performed whenever the OLIU circuit pack is inserted or recovers from a transient failure.

The 26G2-U OLIU has STS-1 and VT1.5 signal degrade protection switching and STS signal degrade protection switching capabilities.

Performance Monitoring

The 26G2-U OLIU provides PM circuitry for the following performance parameters:

- STS-1 section severely errored frame seconds (B1 SEFS) count
- Line coding violation counts (B2 parity)
- Line errored seconds
- STS-1 path coding violation counts (B3 parity)
- STS-1 path errored seconds
- VT path coding violation counts (V5 parity)
- VT path errored seconds.

Power Circuitry

Power for the 26G2-U OLIU circuit pack is provided by two DC-to-DC converters located on the 26G2-U OLIU circuit pack. The converters supply +5 volts. Both A and B –48 volt backplane busses supply power to the converters through diode ORed circuit pack-mounted power select circuits and a circuit pack-mounted fuse. The 26G2-U provides +5V power to the low-speed slots. Failure of the fuse or converters causes the red FAULT LED to light.

26G2-U OLIU Quick Reference Summary

Transmit Functions

Major transmit functions of the 26G2-U OLIU circuit pack are as follows:

a. Selects and multiplexes VT-Gs into one STS-1 synchronous payload envelope (SPE)
b. Adds SONET and STS-1 path transport overhead
c. Scrambles the STS-1 signal to prepare for optical conversion
d. Uses a laser transmitter to produce a SONET standard OC-1 optical signal.

Receive Functions

The following are major receive functions of the 26G2-U OLIU circuit pack:

a. Receives one SONET standard OC-1 optical signal and converts it to an electrical STS-1 signal
b. Extracts transport and STS-1 path overhead
c. Processes the STS-1 pointer and frame-synchronizes the STS-1 signals
d. Processes the VT1.5 pointers and frame-synchronizes the VT1.5 signal
e. Provides path protection switching
f. Provides VT1.5/STS-1 signal cross-connections
g. Sends VT-Gs to the DS1 circuit packs

Control Functions

The major control functions are as follows:

a. Processes transport and path overhead
b. Stores inventory information (*CLEI* code, date of manufacture, etc.)
c. Supports VT and OC-1 signal degrade protection switching
d. Supports protection switching of circuit packs in the low-speed slots.

Maintenance Signal Functions

The major maintenance signal functions are as follows:

a. Inserts and detects OC-1 line and STS-1 and VT1.5 path AIS
b. Inserts STS-1 and VT1.5 path unequipped signal
c. Inserts and detects line far-end-receive
d. Inserts and detects STS-1 path yellow.

28G-U/28G2-U OLIU Circuit Pack Description

Purpose of Circuit

The 28G-U/28G2-U OLIU circuit pack interfaces with a 1310 nm optical line in the transmit and receive directions. It provides an interface between the OC-3 optical line and the electrical STS-1 and VT-G signals. The fiber is accessed via a pair of universal optical connectors on the 28G-U/28G2-U faceplate that supports ST, SC, and FC type optical connectors. Both single mode and multi mode facilities are supported.

The 28G-U/28G2-U OLIU circuit pack also has the following functions:

- Active VT timeslot interchanging in the function slot
- Access to low speed slots and main slots from the function slot

The 28G-U/28G2-U OLIU must be used in the main slots of the DDM-2000 FiberReach wideband shelf.

28G-U/28G2-U OLIU Faceplate Indicators

The 28G-U/28G2-U circuit pack faceplate indicators are shown in Figure 7-32. The red FAULT LED lights on detection of circuit pack hardware failure. In the event of an incoming OC-3 signal failure, this LED will flash on and off. The green ACTIVE LED lights when the circuit pack is active (carrying service).

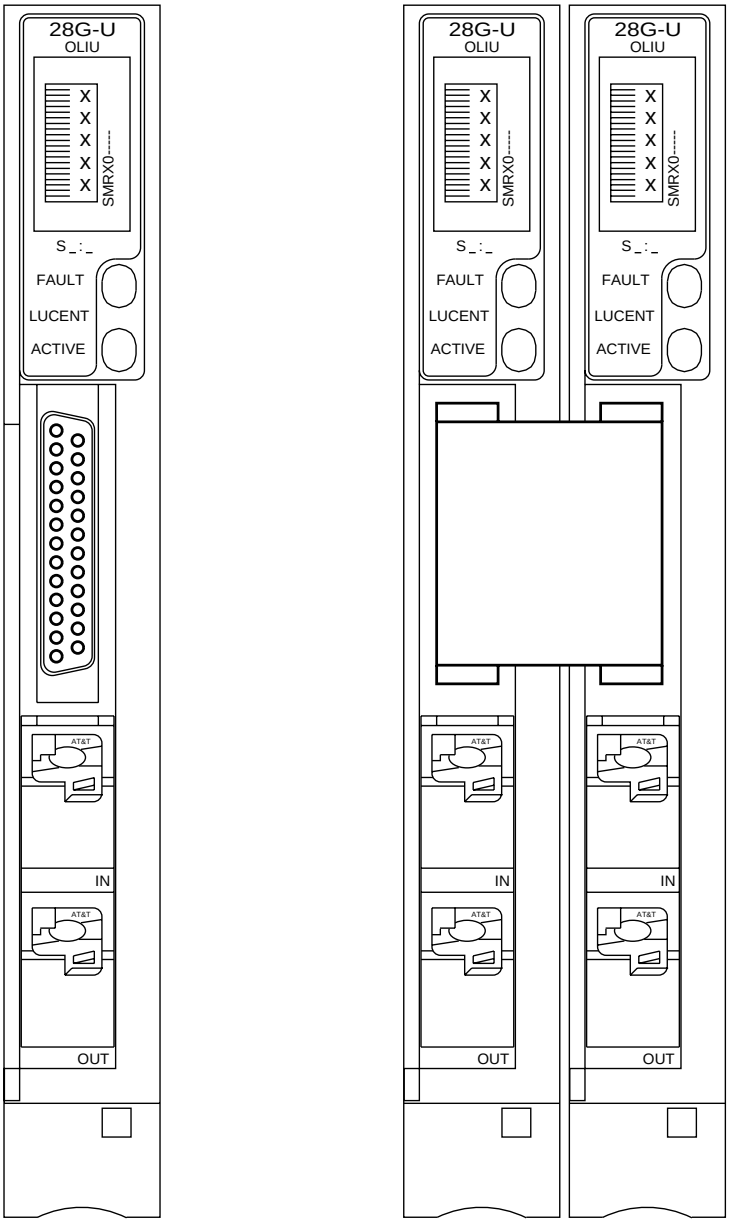

Figure 7-32. 28G-U/28G2-U OLIU Circuit Pack — 28-Type Pair with Interconnect Cable Assembly

A faceplate-mounted universal optical connector allows the 28G-U/28G2-U OLIU to accept fiber terminated with ST, SC, or FC connectors. The 28G-U/28G2-U OLIU operates over single mode fiber. Various combinations of buildout attenuators and connectors are also available. See Chapter 10, "Technical Specifications," for a list of universal buildout attenuators.

General Description of Operation

The 28G-U/28G2-U circuit pack accepts eight VT-G signals from the DS1 circuit packs, performs protection switch selections, combines the selected signals to form an STS-1 signal, inserts STS-1 path overhead, inserts SONET transport overhead bytes (line and section) and STS path overhead bytes, and scrambles the resulting signal which drives a separate laser transmitter to create an OC-3 output.

The 28G-U/28G2-U circuit pack converts a received OC-3 signal back to an electrical STS-3, descrambles and demultiplexes it, and processes the transport overhead. It sends some of the overhead (for example, section data communications channel) via serial data links to the control packs, and processes other bytes (for example framing, parity check) on board. It performs STS-1 pointer processing to guarantee STS-1 frame alignment and STS-1 path overhead and VT1.5 pointer processing. The 28G-U/28G2-U then performs VT1.5 TSI, multiplexes four VT1.5 signals to VT-Gs, and sends the VT-Gs to the low-speed slots or sends up to 3 STS-1s to the function unit slots.

On the FiberReach wideband shelf, the 28G-U/28G2-U OLIU provides an interface of eight VT-G signals. These groups are multiplexed into an STS-1 signal. A VT1.5 cross-connect allows VT1.5 switching as required.

Detailed Description of Operation

Figure 7-33 is a block diagram of the 28G-U/28G2-U OLIU circuit pack.

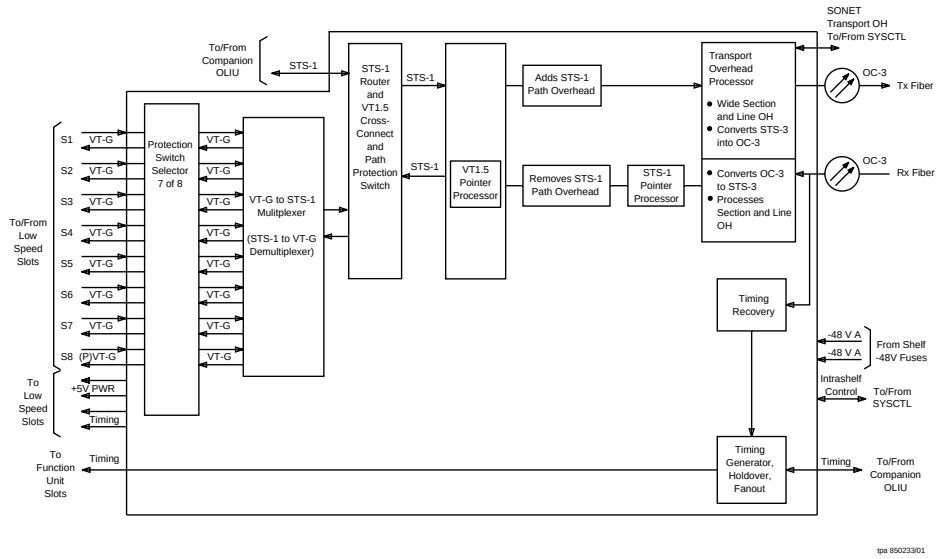

Figure 7-33. 28G-U/28G2-U OLIU Circuit Pack Block Diagram

Transmission Circuitry

STS-1 Router and VT1.5 Cross-Connect. The STS-1 router is used to select STS-1s for both the transmit and receive directions. All incoming STS-1s are fed to the VT1.5 cross-connect. The outgoing STS-1 may be sourced by this VT1.5 cross-connect or sourced directly by an STS-1 input.

Transmit Direction. In the transmit direction (from the low-speed slots toward the optical interface), the VT-G signals from the low-speed slots are combined into an STS-1 signal. SONET path overhead is then added to STS-1 sourced by the VT1.5 cross-connect before the signals are sent to the transport overhead processor. The transport overhead processor takes the STS-1 signal, adds SONET transport overhead, then scrambles the signal with a frame synchronous scrambler. The output from the transport overhead processor is in the SONET STS-3 format and is used to modulate the amplitude of the laser transmitter, converting the electrical signal to an NRZ-encoded SONET compatible OC-3 optical signal.

The 28G-U/28G2-U provides an STS-1 electrical interface to a companion 28G-U/28G2-U OLIU which allows the two OLIUs to be cross coupled.

Receive Direction. In the receive direction, the optical receiver converts the light pulses from an NRZ-encoded OC-3 signal to equivalent electrical pulses. The output from the optical receiver goes into a recovery device. The transport overhead processor circuit accepts the STS-3 bit stream, frames on the incoming signal, descrambles it, and processes OC-3 transport overhead. The overhead information is sent to the SYSCTL circuit pack.

The STS-1 output from the transport overhead processor is sent to the STS-1 pointer processor which performs pointer interpretation and generation. The output of the STS-1 pointer processor is sent to the VT1.5 pointer processor. STS-1 path overhead and VT1.5 pointer processing is performed. STS-1s that do not require VT1.5 cross-connections are passed through without VT1.5 pointer processing or STS-1 path overhead termination. The output from the VT1.5 pointer processor is sent to the STS-1/VT1.5 router. The router cross-connects the appropriate VT1.5 tributaries and sends two STS-1 signals to the appropriate Main or Function Unit (MFU) slots and up to 8 VT-Gs to the low-speed slots.

The 28G-U/28G2-U terminates an OC-3 optical signal, converts it to an electrical signal, frames on and descrambles the signal, and processes the Transport Overhead (TO).

Control Circuitry

The 28G-U/28G2-U OLIU circuit pack interfaces with the BBG8 system controller (SYSCTL) via the intershelf control interface. The 28G-U/28G2-U OLIU provides maintenance elements for reporting the status of the circuit pack, status of the incoming optical and electrical signals, as well as inventory information (*CLEI* code, date of manufacture, etc.). These maintenance elements are used by the SYSCTL for fault detection and isolation. Conversely, the 28G-U/28G2-U OLIU responds to control signals from the SYSCTL such as STS-1 routing, VT1.5 routing, protection switching, and LED control commands.

The 28G-U/28G2-U OLIU accesses the SONET transport overhead and routes it to and from the SYSCTL circuit pack.

Protection Circuitry

STS-1 and VT1.5 path protection switching, compliant with SONET specifications, is provided. The 28G-U/28G2-U OLIU is protection switched by the SYSCTL in response to an external command, incoming optical signal failure, or internal equipment fault. The 28G-U/28G2-U OLIU circuit pack is protection switched by the SYSCTL when the SYSCTL detects a fault on the active 28G-U/28G2-U OLIU, and the companion 28G-U/28G2-U OLIU is good.

The 28G-U/28G2-U OLIU interfaces via VT-G signals with circuit packs in the low-speed slots and via STS-1 signals with the circuit packs in the main and function unit slots. It selects the signals from the service or protection slot of each pair as directed by the SYSCTL.

Fault Detection Circuitry

The 28G-U/28G2-U OLIU circuit pack has in-service and out-of-service built-in test capability. In-service testing is continuous, and errors are reported when they occur to the SYSCTL via the intrashelf control bus. An out-of-service test is performed whenever the OLIU circuit pack is inserted or recovers from a transient failure.

The 28G-U/28G2-U OLIU has STS-1 and VT1.5 signal degrade protection switching and STS signal degrade protection switching capabilities.

Performance Monitoring

The 28G-U/28G2-U OLIU provides PM circuitry for the following performance parameters:

- STS-1 section severely errored frame seconds (B1 SEFS) count
- Line coding violation counts (B2 parity)
- Line errored seconds
- STS-1 path coding violation counts (B3 parity)
- STS-1 path errored seconds
- VT path coding violation counts (V5 parity)
- VT path errored seconds.

Power Circuitry

Power for the 28G-U/28G2-U OLIU circuit pack is provided by three DC-to-DC converters located on the 28G-U/28G2-U OLIU circuit pack. The converters supply 5.5, 5, and 3.3 volts. Both A and B –48 volt backplane busses supply power to the converters through diode ORed circuit pack-mounted power select circuits and a circuit pack-mounted fuse. The 28G-U/28G2-U provides +5V power to the low-speed slots. Failure of the fuse or converters causes the red FAULT LED to light.

28G-U/28G2-U OLIU Quick Reference Summary

Transmit Functions

Major transmit functions of the 28G-U/28G2-U OLIU circuit pack are as follows:

a. Selects and multiplexes VT-Gs into one STS-1 synchronous payload envelope (SPE)

b. Receives up to 3 STS-1s from function slots

c. Adds SONET and STS-1 path transport overhead

d. Combines 3 STS-1s into STS-3

e. Scrambles the STS-3 signal to prepare for optical conversion

f. Uses a laser transmitter to produce a SONET standard OC-3 optical signal.

Receive Functions

The following are major receive functions of the 28G-U/28G2-U OLIU circuit pack:

a. Receives one SONET standard OC-3 optical signal and converts it to an electrical STS-3 signal

b. Extracts transport and STS-3 path overhead

c. Creates 3 STS-1s from an STS-3 signal

d. Processes the STS-1 pointer and frame-synchronizes the STS-1 signals

e. Processes the VT1.5 pointers and frame-synchronizes the VT1.5 signal

f. Provides path protection switching

g. Provides VT1.5/STS-1 signal cross-connections

h. Sends VT-Gs to the DS1 circuit packs.

Control Functions

The major control functions are as follows:

a. Processes transport and path overhead

b. Stores inventory information (*CLEI* code, date of manufacture, etc.)

c. Supports VT and OC-3 signal degrade protection switching

d. Supports protection switching of circuit packs in the low-speed slots.

Maintenance Signal Functions

The major maintenance signal functions are as follows:

a. Inserts and detects OC-3 line and STS-1 and VT1.5 path AIS

b. Inserts STS-1 and VT1.5 path unequipped signal

c. Inserts and detects line far-end-receive.

29G-U/29H-U OLIU Circuit Pack Description (Long Reach OC-12 Interface)

- Optical/Copper Specifications

  For direct optical loopbacks, at least 10 dB of optical attenuation is needed for the 29G-U optical line. The distributed feedback laser supplies an NRZ-coded signal. The 29G-U OLIU long reach OC-12 interface supports span lengths up to 51 km, assuming 0.45 dB/km single-mode fiber (including splices) and span engineering rules. Transmit and receive powers are referenced to points S and R as shown in Figure 7-34. Detailed specifications and link budget information for the 29G-U OLIU is included in Chapter 10, Technical Specifications. Note that the 29G-U OLIU is not specified to operate over multimode fiber.

  For direct optical loopbacks, at least 10 dB of optical attenuation is needed for the 29H-U line. The distributed feedback laser supplies an NRZ-coded signal. The 29H-U OLIU long reach OC-12 interface supports span lengths up to 96 km, assuming 0.25 dB/km single-mode fiber (including splices) and span engineering rules. Transmit and receive powers are referenced to points S and R as shown in Figure 7-34. Detailed specifications and link budget information for the 29H-U OLIU is included in Chapter 10, Technical Specifications. Note that the 29H-U OLIU is not specified to operate over multimode fiber.

- Alarm Thresholding

  The following parameters are monitored at the OC-12 interface.

  — Loss of signal (LOS)

  — Loss of frame (LOF)

  — Loss of pointer (LOP)

  — Line AIS

  — B2 thresholding signal fail

  — B2 thresholding signal degrade. (B2 signal degrade thresholds are user settable in the range from 10^{-5} to 10^{-9} BER.)

- Performance Monitoring (see Table 10-22)

  — Section SEFS

  — Line parameter B2

  — STS pointer justifications (OC-3 Release 15.0).

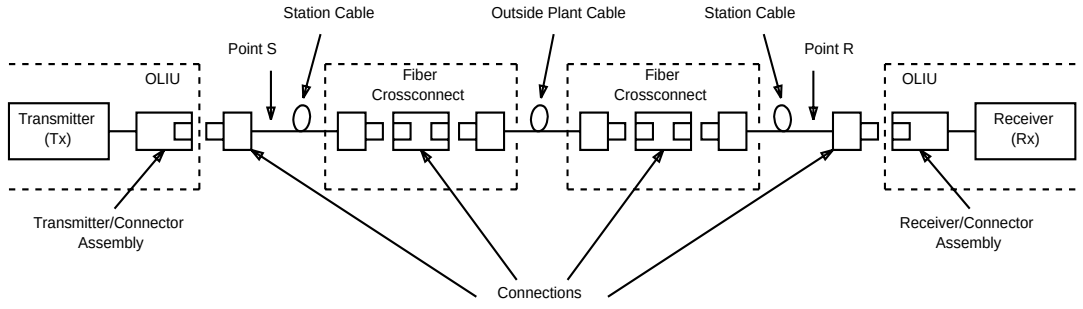

Figure 7-34. Optical System Interfaces (Points S and R)

Narrowband Shelf - Introduction

The DDM-2000 FiberReach narrowband shelf is used in conjunction with the wideband shelf to provide sub-DS1 rate services with protected or unprotected DS1 or higher rate services. The narrowband shelf has its own power conversion.

An arrangement of the narrowband shelf is shown in Figure 7-35.

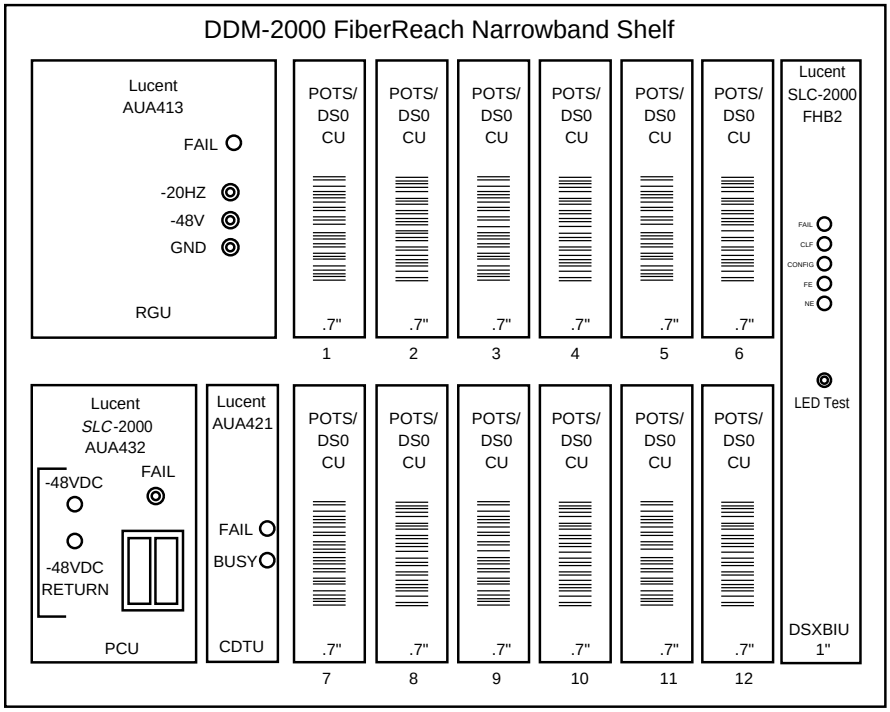

Figure 7-35. Narrowband Shelf

Circuit Packs in the Narrowband Shelf

The circuit packs in the narrowband shelf are as follows:

— AUA413 ringing generator unit (RGU)

— AUA432 power conversion unit (PCU)

— AUA421 channel and drop test unit (CDTU)

— FHB2 digital signal cross-connect backplane interface unit (DSXBIU).

RGU Circuit Pack Description

This circuit pack provides 20 Hz negative superimposed ringing voltage to satisfy loop applications up to 132 ohms. The RGU receives an input voltage from the power converter unit (PCS) and supplies ringing voltage to three lines simultaneously. Each line may have a maximum load of five ringer equivalent numbers (RENs). An output alarm monitor circuit on the RGU monitors the output ringing for an over- or under-voltage condition and activates a red fail LED when either condition occurs. The circuit pack is protected from lightning and power surges by the output surge protection circuit.

NOTE:
The AUA423 is available to be placed in a Narrowband shelf where any channel units are used whose range exceeds 132 ohms.

RGU Faceplate Controls and Indicators

The RGU circuit pack faceplate controls and indicators are shown in Figure 7-36.

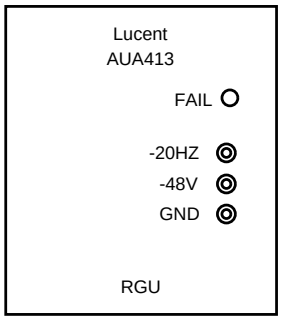

Figure 7-36. AUA413 RGU Circuit Pack

PCU Circuit Pack Description

This circuit pack is located on the Narrowband shelf and accepts -48V DC power. It converts -48V DC to +5 and -5V DC, as well as -25.5V DC for use by various channel units that may be in the Narrowband service card slots. The PCU provides power to all the circuit packs on the Narrowband shelf by converting incoming -48V DC power to voltages required for the various circuit packs.

The BGW1 PSU, miscellaneously mounted with the DDM-2000 FiberReach shelf, terminates a 60V AC from a network-provided source (for example, centralized

power). The PSU converts incoming 60V AC to -48V DC for use by the Wideband and Narrowband shelves. In applications where -48V DC is readily available, The PSU is not required.

PCU Faceplate Controls and Indicators

The PCU circuit pack faceplate controls and indicators are shown in Figure 7-37.

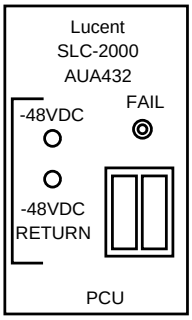

Figure 7-37. AUA432 PCU Circuit Pack

CDTU Circuit Pack Description

The Channel and Drop Test Unit (CDTU) circuit pack provides the remote end terminations and detectors required to support end-to-end channel testing of two-wire locally-switched services, such as POTS, coin, and multiparty services. When a channel unit test request is received on the Narrowband shelf, the DSXBIU instructs the channel unit associated with the channel under test to operate its test relay. The DSXBIU then instructs the CDTU that a test is occurring, and the CDTU then performs a drop test and reports the results back to the DSXBIU. The CDTU provides channel test terminations in sequence based on results from the channel test detectors and instructions from the DSXBIU.

- Hazardous voltage
- Foreign voltage
- Metallic leakage
- Receiver off-hook
- Lack of continuity to the station set.

The circuit pack contains a red fail LED to indicate an internal failure in the CDTU circuit pack and a green busy LED to indicate that a test session is active.

CDTU Faceplate Controls and Indicators

The CDTU circuit pack faceplate controls and indicators are shown in Figure 7-38.

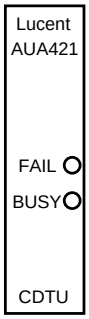

Figure 7-38. AUA421 CDTU Circuit Pack

DSXBIU Circuit Pack Description

The Digital Signal Cross-Connect Backplane Interface Unit (DSXBIU) is a Narrowband shelf circuit pack that operates as the local controller for the Narrowband shelf and multiplexes the DS0 signals from the channel units to DS1 interfaces. The DS1 interface is fed from the DSXBIU to a DS1 circuit pack on the Wideband shelf. Software for the DSXBIU may be downloaded from the SLC-2000 host digital terminal.

The DSXBIU interfaces to the 12 channel units on the Narrowband shelf, providing provisioning and inventory information, as well as clock generation and synchronization. The DSXBIU communicates with the common units via a serial protocol microwire link. A separate microwire RS-422 interface connects with the power supply unit. A bank control link on the DSXBIU is used to communicate with the channel units.

DSXBIU Faceplate Controls and Indicators

The DSXBIU circuit pack faceplate controls and indicators are shown in Figure 7-39.

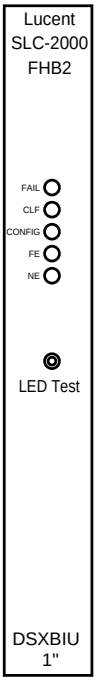

Figure 7-39. FHB2 DSXBIU Circuit Pack

Channel Units in the Narrowband Shelves

Channel Unit Circuit Pack Descriptions

Table 7-9 lists the circuit packs that can be housed in the 12-channel unit slots of the narrowband shelf. All circuit packs within the DDM-2000 FiberReach narrowband shelf are unprotected. These channel units are the same as those used in the *SLC*®-2000 Access System Multi-Services Distant Terminal (MSDT). Table 7-9 also indicates which circuit packs are available with each *SLC*®-2000 software release.

Table 7-9. DDM-2000 FiberReach Narrowband Shelf Channel Unit Plug-Ins

Product Code	Functional Name	Available With *SLC*-2000 Release
AUA25B*	POTS/M SPOTS CU CF (Discontinued Availability)	4.4
AUA27*	POTS CF + OHT (Versus feature not available)	4.4
AUA39	POTS/SPOTS CU CS + OHT/CLASS (Discontinued Availability)	4.4
AUA41	4W VF CF (Discontinued Availability)	4.4
AUA41B	4-Wire CF, (FXS/ETO/DX)	4.4
AUA42*	E SPOTS CU at COT (Discontinued Availability)	4.4
AUA42B	E SPOTS CU at COT	4.4
AUA43B	E SPOTS CU CF	4.4
AUA44*	4-Wire VF CS (Includes TDM Signaling) (Discontinued Availability)	4.4
AUA44B	4W VF CS I (Includes TDM Signaling)	4.4
AUA45B	Dual Ringing Repeater (Manual Ring)	4.4
AUA52	OCU Dataport (Discontinued Availability)	4.4
AUA52B	OCU Dataport, All-rate	4.4
AUA53	Coin CF	
AUA53B	Single Coin CF	4.4
AUA54	4W VF Types I and II E&M (Discontinued Availability)	4.4
AUA54B	4W VF Types I and II E+M/PLR	4.4
AUA55	Multiparty CF	4.4
AUA55B	Multiparty CF (Discontinued Availability)	4.4
AUA56	DID/DPT (Discontinued Availability)	4.4
AUA56B	Dual DID/DPT	4.4
AUA57	FSR CF	4.4

Product Code	Functional Name	Available With *SLC*-2000 Release
AUA59	SPOTS CU CF + OHT/CLASS (Discontinued Availability)	4.4
AUA75*	Private Line Automatic Ring (PLAR)	4.4
AUA93	ISDN BRITE II, ANSI-U†	4.4
AUA94	ISDN Dual *ANSI*-U	4.4
AUA150*	POTS/SPOTS CU CF + OHT/CLASS	4.4
AUA150C	Dual POTS/SPOTS CF + OHT/CLASS + ALC	4.4
AUA152‡	OCU dataport (TR-08/INA VRTs) (Discontinued Availability)	4.4
AUA158B	ALC POTS CF + OHT/ CLASS (Discontinued Availability)	4.4
AUA158C	ALC POTS CF + OHT/CLASS (Discontinued Availability)	4.4
AUA158D	Dual POTS (ALC+ CF + OHT/CLASS + Adaptive Balance)	4.4
AUA159B	ALC POTS/SPOTS CF + OHT/CLASS (modified OHT loss)	4.4
AUA159C	ALC POTS/SPOTS CU + OHT/CLASS	4.4
AUA178	ALC C-POTS CF OHT/CLASS (Discontinued Availability)	4.4
AUA178B	C-POTS (ALC + Adaptive Balance + Extended Range to 1400 OHMS + OHT + CLASS)	4.4
AUA179	ALC POTS/SPOTS CU + ALIC5 + OHT/CLASS	4.4
AUA200	2-wire switched 56-kb/s DPX	4.4
AUA232	RS-232 DSU Dataport	4.4
AUA252	OCU Dataport with SW56 (Discontinued Availability)	4.4
AUA252B	OCU Dataport with SW56 (2.4, 4.8, 9.6, 19.2, 38.4, 56, and 64 kilobits data rates)	4.4
AUA293	ISDN BRITE III, ANSI-U	4.4
MCU§5205	Metallic Channel Unit (Tollgate)	4.4
SPQ®300	POTS CS + OHT/CLASS + LSAS	4.4
SPQ340	*SLC*-2000 ALC POTS/SPOTS® CU CS + OHT/CLASS + LSAS	4.4
SPQ400*	*SLC*-2000 ALC POTS CF + OHT/CLASS (Discontinued Availability)	4.4
xSPQ400*	*SLC*-2000 ALC POTS CF + OHT/CLASS	4.4
SPQ400*B	ALC POTS CF + OHT/CLASS (Discontinued Availability)	4.4
SPQ400C	Quad POTS (CF + OHT/CLASS)	4.4
SPQ401*	*SLC*-2000 ALC POTS CF + OHT/CLASS (Discontinued Availability)	4.4
SPQ401B	*SLC*-2000 POTS/SPOTS CU CS + DHT/CLSS + LSAS VFDE (Discontinued Availability)	4.6
SPQ402	Quad POTS (CF + OHT/CLASS + ALC + VFDE + Adaptive Balance, 1400 OHMS)	4.4
SPQ419	Quad Coin CF	4.4

Product Code	Functional Name	Available With *SLC*-2000 Release
SPQ429	Quad EBS P-Phone (Discontinued Availability)	4.4
SPQ440	Quad SLC-2000 ALC POTS/SPOTS CU CF + OHT + CLASS + CLSS (Discontinued Availability)	4.4
SPQ440B	Quad POTS/SPOTS ALC CF + OHT + CLASS + CLSS (Discontinued Availability)	4.4
SPQ440C*	Quad Extended Range SPOTS (Discontinued Availability)	4.4
SPQ440D*	Extended Range SPOTS; VFDE	4.6
SPQ442	*SLC*-2000 E SPOTS CU CS	4.4
SPQ443*	*SLC*-2000 E SPOTS CU CF	4.4
SPQ450	ALC POTS/SPOTS CU CF + OHT/CLASS ALIC5 + LSAS	4.4
SPQ452	*SLC*-2000 OCU Dataport	4.4
SPQ453	Dual Coin CF	4.4
SPQ456	Quad DID	4.4
SPQ460	Quad POTS/SPOTS (ALC, CF + Extended Range + VFDE)	4.4
SPQ478	*SLC*-2000 ALC C- POTS CF OHT/CLASS	4.4
SPQ494	Quad ISDN ANSI-U	4.4
SPQ909	Lower-power POTS CF + OHT/CLASS	4.4

* Some engineering restrictions (for example, power limitations) must be considered when using this channel unit. Refer to Section 6, “System Planning and Engineering,” for more information.

† Registered trademark of American National Standards Institute, Inc.

‡ GTE only.

§ Trademark of Tollgate Communications, Inc.

Administration and Provisioning

8

Contents

Overview 8-1

Wideband Shelf Administration 8-1

- Version Recognition 8-1
  - Software Upgrades 8-2
  - Remote Software Download and Copy 8-2
  - Data Base Backup and Restoral 8-3
  - ITM SNC 8-4
- Security 8-4
  - Enhanced Security Features 8-6
- Software Compatibility 8-6
- Controller Maintenance and Memory Administration 8-7
  - Controller Maintenance 8-7
  - Memory Administration 8-7
  - Service Affecting Actions 8-8

DS-1/T1 Multiplexing and Mapping 8-9

Wideband Shelf Provisioning 8-9

- Default Provisioning 8-9
- Remote Provisioning 8-10
- Automatic Provisioning on Circuit Pack Replacement 8-10
- Feature Packaging Provisioning 8-10
- Open Systems Interconnection (OSI) Provisioning 8-10
- Port State Provisioning 8-11
- Channel State Provisioning 8-11

Contents

Line State Provisioning 8-12
AIS or Unequipped Provisioning 8-12
- Data Communications Channel (DCC) Provisioning 8-12
- Operations Interworking (OI) Provisioning 8-12

Software Compatibility 8-14
- NSAP Provisioning 8-16
- TARP Provisioning 8-16

Selectable Parameters 8-17
- Switch Selectable Parameters 8-17
- CIT Selectable Parameters 8-18

Performance Monitoring (PM) Parameters Provisionable via the CIT 8-22

Cross-Connection Provisioning 8-22
- Cross-Connection Types 8-23

Termination/Drop Cross-Connection 8-23
Add Drop Cross-Connection for DS3 8-27
Pass-Through Cross-Connection 8-28
Locked Cross-Connection 8-30
Manual Cross-Connection Procedure 8-35
OC-1 Path Protected Ring Application Example 8-35
Single-Homed Path-Switched Ring Example 8-38
Dual-Homed Path-Switched Ring Example 8-42
OC-1 Ring Pass-Through Example 8-44
Example Cross-Connections 8-45
OC-1 Ring Hairpin Routing, Single-Homed Example 8-46
Example Cross-Connections 8-47
OC-1 Ring Hairpin Routing, Dual-Homed Example 8-48
Example Cross-Connections 8-49
Hairpin Local Drop Routing Example 8-50
Example Cross-Connections 8-51
Cross-Connects for Release 3.1 and Later 8-52
Basic DS3 Cross-Connects 8-53

Contents

DS3 Locked Cross-Connects 8-54

STS-3c Cross-Connects 8-55

Narrowband Administration and Provisioning 8-58

Narrowband Shelf Administration 8-58

Software Downloads and Upgrades 8-58

Security 8-58

Narrowband Shelf Provisioning 8-61

Channel Unit Provisioning 8-61

Contents

Administration and Provisioning

8

Overview

This chapter describes the administration and provisioning features of the DDM-2000 FiberReach Multiplexer narrowband shelf and wideband shelves. The following topics are described in addition to the administration and provisioning features:

- Multiplexing and mapping
- Cross-connection provisioning for linear and ring networks
- Listing of provisionable parameters with their ranges and default values.

Wideband Shelf Administration

Version Recognition

The DDM-2000 FiberReach Multiplexer provides automatic version recognition of all hardware, firmware, and software installed in the system. Each circuit pack *CLEI** code, equipment catalog item (ECI) code, apparatus code and series number, and serial number is stored on the circuit pack and is accessible by the system controller (SYSCTL) via the craft interface terminal (CIT). Circuit packs with socketed devices also report those devices and program identification (PID)

* COMMON LANGUAGE is a registered trademark and CLEI, CLLI, CLCI, and CLFI are trademarks of Telcordia Technologies.

codes.The system controller also reports the software version for the system. Refer to the **`rtrv-eqpt`** command in Chapter 11, "Commands and Reports."

Software Upgrades

The DDM-2000 FiberReach wideband shelf provides an in-service software installation capability to update the generic program in local and remote systems. In-service software installation is done via the CIT port on local systems and via the host on remote systems. Upgrades are distributed on *MS-DOS* formatted diskettes, containing the new software and an installation program. These software upgrades are the primary mechanism to add new feature enhancements to the in-service DDM-2000 FiberReach network. All software upgrades are in-service and do not affect any provisionable parameters. For example, cross-connections are left unchanged by the software upgrade.

The software upgrade can be performed locally via the CIT port on the local FiberReach wideband shelf or remotely via the SONET DCC. In either case, the procedure is straight forward. The technician connects an *MS-DOS* personal computer serial port to the CIT port on the DDM-2000 Fiber Reach (for local upgrades) or to the CIT port of another DDM-2000 in the subnetwork (for remote upgrades), starts the installation program, and is prompted with a few safety questions before the upgrade installation actually begins. After the technician confirms to proceed, the PC takes over the process and completes the installation. When finished, the DDM-2000 FiberReach shelf automatically restarts with the new software.

On command, the new software may be copied from the upgraded system to other systems over the DCC, allowing software version changes without having to dispatch technicians to any remote site. Because FiberReach Release 3.0 and later is not OI-compatible with earlier releases of FiberReach, FiberReach Release 3.0 and later software can **not** be copied (NE-NE) to a FiberReach Release 2.2 or earlier NE. Remote PC-NE software downloads are recommended for FiberReach Release 3.0 and later. Refer to the *Lucent Technologies 2000 Product Family Multi-Vendor Operations Interworking Guide*, 824-102-144.

Remote Software Download and Copy

System software can be downloaded using a PC through the EIA-232-D interface on the user panel to another system connected to the local system via the SONET DCC. THe DDM-2000 FiberReach Multiplexer can upgrade the system software while in-service. DDM-2000 FiberReach Multiplexers use flash erasable programmable read-only memory (flash EPROM) chips to provide this capability. Software can be downloaded from a PC to a remote NE even when the local shelf is a different member of the DDM-2000 product family or *SLC*-2000 from the remote shelf (for example, a DDM-2000 OC-12 at the CO and a DDM-2000 FiberReach at the RT site.) Remote software download and copy is also

supported in multi-vendor subnetworks, but only between DDM-2000 Multiplexers. The remote software download and copy capabilities enable the network service providers to avoid costly craft dispatches for software upgrade.

DDM-2000 FiberReach can also accept software downloads from Lucent's ITM SNC 5.0 when upgrading from DDM-2000 FiberReach R3.0 or later to subsequent releases.

Data Base Backup and Restoral

The DDM-2000 FiberReach data bases can be backed up and restored from a file using CPro-2000 to protect valuable system information after a catastrophic failure. Catastrophic failures may include:

- Shelf destruction by fire, hurricane, flood, or other natural event or intentional damage
- Cabinet housing the shelf damaged by a vehicle
- Manual errors during provisioning or maintenance.

The backup can be done using CPro-2000 through the CIT port on any shelf in the subnetwork to all DDM-2000 FiberReach shelves in the same subnetwork or from the host. The information that can be backed up and restored includes:

- Major NE provisionable parameters on the circuit packs and line ports
- Cross-connections
- Performance monitoring (PM) threshold parameters.

In addition, the following information is backed up for reference only, and will not be restored by CPro-2000:

- Target identifier (TID)
- Software version
- System equipage
- Software readable hardware switch settings
- User names.

These parameters are either not settable or should be set manually before or after restoration by CPro-2000.

The data base backup and restoral capability of CPro-2000 can be used to significantly simplify the installation of several shelves having similar or identical configurations. See 365-576-130, *CPro-2000 User Manual* for more information.

ITM SNC

All of the backup and restore features are also available with the Integrated Transport Management Subnetwork Controller (ITM SNC). Refer to OI Software Compatibility table later in the chapter for release compatibilities. Refer to 107-564-270, *Integrated Transport Management (ITM) SubNetwork Controller (SNC), User Guide,* for additional information.

Security

DDM-2000 FiberReach Multiplexers provide security capabilities to protect against unauthorized access to the system through the CIT and data communications channel (DCC). In addition, the DCC can be disabled, thus securely isolating that DDM-2000 FiberReach Multiplexer from possible remote intrusion. When security is enabled (default is disabled for the CIT and DCC, and always enabled for the TL1 user), four types of users are allowed access to the DDM-2000 FiberReach wideband shelf with a valid login and password:

- Privileged Users: These users have access to all commands, including restricted commands. Privileged users may set system security and assign login and password pairs to general and reports-only users. A maximum of three privileged user logins are allowed.

NOTE:
A maximum of 100 non-privileged user logins are available. The types of non-privileged logins are listed below.

- General Users: These users have access to all commands, except restricted commands.
- Maintenance-Only Users: These users (available in Release 2.2 and later) have access to basic commands and maintenance commands only (for example, loopbacks and forced switches) but cannot execute any provisioning commands or restricted commands.
- Reports-Only Users: These users may only obtain reports and execute several basic commands.

A provisionable inactive timeout is available for each CIT and DCC access port. This enables automatic termination of inactive or unattended sessions. An additional lockout feature is available that prohibits access to all users except privileged users.

On wall distant terminal enclosures, a security lock is provided to restrict access to circuit packs.

Authorized privileged users can establish general user and reports-only user logins using the **`set-lgn`** command. Authorized privileged users can also "lockout" access by general and reports-only users without deleting the login and password file.

The following commands are restricted to privileged users over the CIT and DCC interfaces.

- **init-sys** — Initialize System
- **rstr-passwd** — Restore login and password file
- **rtrv-lgn** — Retrieve Login
- **rtrv-passwd** — Retrieve login and password file
- **set-feat** — Set Features
- **set-fecom** — Set Far-End Communications
- **set-lgn** — Set Login
- **set-secu** — Set Security
- **set-sync** — Set Synchronization characteristics.

When security is enabled (default is “disable”), the following additional commands become restricted to privileged users only:

- **apply** — Locally Overwrite Executing Software
- **cpy-prog** — Copy Program
- **dlt-osacmap** — Delete OS application context ID map
- **ent-osacmap** — Enter OS application context ID map
- **ent-tl1msgmap** — Enter TL1 message map for OS
- **ent-ulsdcc-l3** — Enter Upper Layer Section DCC - Layer 3
- **ent-ulsdcc-l4** — Enter Upper Layer Section DCC - Layer 4
- **dlt-ulsdcc-l4** — Delete Upper Layer Section DCC - Layer 4
- **init-pm** — Initialize Performance Monitoring
- **ins-prog** — Install Program
- **reset** — System Reset
- **set-date** — Set network element (NE) Date and time
- **set-ne** — Set NE name.
- **set-x25** — Set X.25 baud rate for OS.

Reports-only users can execute the following commands:**?** (help), **logout**, **rlgn**, **set-passwd** (their own), **toggle**, and all **rtrv** commands **except**, **rtrv-lgn**, and **rtrv-passwd**.

For details on these and other commands, see Chapter 11, "Commands and Reports."

Enhanced Security Features

In DDM-2000 FiberReach Release 4.0, security feature enhancements include:

- User Provisionable Banner - a “Welcome Banner” that appears when a user signs on to the system
- 30-Day Aging on Passwords for Privileged Accounts
- Individual Accountability
  - — Allowable number of Privileged Users has increased.
  - — Allowable number of General Users, Maintenance-Only Users, and Reports-Only Users has increased.

Software Compatibility

All DDM-2000 FiberReach Multiplexers connected in the same maintenance subnetwork must be running compatible software. For more information on software compatibility, refer to the “OI Software Compatibility” table in this chapter.

NOTE:
FiberReach Release 3.0 and later is NOT compatible with previous releases of DDM-2000 OC-3, OC-12, and FT-2000. Therefore, when upgrading a network, care should be taken to avoid isolating NEs that have not yet been upgraded to Release 3.0 and later.

Controller Maintenance and Memory Administration

Controller Maintenance

The system controller (SYSCTL) provides control functions for the DDM-2000 FiberReach Multiplexer. The SYSCTL circuit pack provides CIT interfaces and coordinates protection switching, as well as all shelf maintenance and provisioning activities. The SYSCTL also provides a communications channel to remote shelves via the DCC bytes in the OC-1/OC-3/OC-12 section overhead. The SYSCTL has a processor with volatile random access memory (RAM), and nonvolatile memory.

The DDM-2000 FiberReach Multiplexer is designed so that SYSCTL failures do not affect transmission. That is, no hits or errors will occur on any traffic as a result of a SYSCTL circuit pack failure. A SYSCTL failure does result in the loss of automatic protection switching. However, if a transmission circuit pack fails before a SYSCTL failure, the protection switch will remain effective during the SYSCTL failure and service is preserved. This means that if an active transmission circuit pack should fail while the SYSCTL is failed, a protection switch cannot be done and service carried by the failed circuit pack will be affected.

Memory Administration

All transmission affecting parameters that are set by software, such as bipolar 8-zero substitution/alternate mark inversion (B8ZS/AMI) encoding on DS1 interfaces and cross-connect assignments, are stored in nonvolatile memory on the SYSCTL circuit pack and on the appropriate transmission circuit packs. When the shelf is powered up or the SYSCTL circuit pack is replaced, the shelf's transmission values are automatically uploaded to the SYSCTL. When a transmission circuit pack is replaced, provisioning data stored on the SYSCTL is automatically downloaded to the replacement circuit pack. Manual action is not required to maintain system provisioning after a circuit pack is replaced.

Certain non-service-affecting provisioned data, such as alarm delay, is stored only on the SYSCTL circuit pack. This means that when a SYSCTL circuit pack is replaced, the new SYSTCL circuit pack should be initialized by pressing the INIT button during the 10-second interval while the CR alarm LED is flashing after the SYSCTL circuit pack is inserted. This action is the same as entering the **`init-sys:sysctl`** command which sets the SYSCTL circuit pack parameters to their default values. Refer to the **`init-sys`** command in Chapter 11, "Commands and Reports" and to "Install or Replace SYSCTL" in the TOP section of this manual. If parameters other than the default values are needed, the values must be entered using the CIT. If the INIT function is not performed, whatever values that are stored in nonvolatile memory on the new SYSCTL circuit pack are used. Failure to follow the proper procedure may not cause transmission errors or loss of

service but could affect maintenance. For example, an incorrect TID could produce confusing TL1 reports to the operations system (OS).

Service Affecting Actions

Although the DDM-2000 FiberReach Multiplexer is designed to minimize loss of service due to equipment failure or human action, there are certain controller related actions that can cause a loss of provisioning data and possibly loss of service. These actions include:

- Replacing a transmission circuit pack when the SYSCTL is failed or removed can result in a loss of provisioning data and loss of service.
- Replacing a transmission circuit pack in a shelf without power can result in a loss of provisioning data. Loss of service may continue on channels associated with the replaced circuit pack after the shelf is powered up.
- Executing the command **`init-sys:all`** sets all provisioning data, including cross-connect provisioning to default values. This causes loss of service on any channel connected with non-default cross-connections.
- Failing to disable the SYSCTL circuit pack before it is removed in accordance with TOP procedures could result in unexpected events; however, no loss of service occurs. Refer to the "Install BBG8/BBG8B SYSCTL New Shelf" and “Replace Circuit Pack” procedures in the TOP section of this manual.
- Provisioning data is maintained through a software download to the SYSCTL. Replacing the SYSCTL circuit pack with incompatible software and intentionally overriding the software check could result in a loss of data.

DS-1/T1 Multiplexing and Mapping

The DDM-2000 FiberReach Multiplexer uses the floating virtual tributary (VT) mode, asynchronous mapping for clear channel DS1 transport. Each DS1 signal is mapped to a VT1.5 signal; four VT1.5s are byte-interleaved to form a VT-G signal; and seven VT-Gs are multiplexed to a VT-structured STS-1 signal. the STS-1 signals are byte-interleaved to create STS-3, OC-3/OC-12, and STS-12 signals respectively. The **`ent-crs-vt1`** command is used to enter cross-connections between VT1.5 channels in the OC-1 interface and DS1/T1 ports. There are no default cross-connections. See Chapter 11, "Commands and Reports," for more information on this command.

In the opposite direction, a received OC-1 signal is converted back to the electrical signal, and, for OC-3 and OC-12, demultiplexed to an STS-1 signal. The STS-1 is demultiplexed to seven VT-Gs; each VT-G is separated into four VT1.5s; and a DS1 signal is extracted from each VT1.5.

The mapping of a DS-1 to an OC-1 signal requires the port address being connected with a time slot in the optical line interface unit (OLIU) circuit pack. Optical time slots are identified in three parts: — STS-1 in the OC-1*, VT-G in the STS-1, and VT1.5 in the VT-G.

Wideband Shelf Provisioning

The DDM-2000 FiberReach Multiplexer allows the user to customize many system characteristics through its provisioning features. Provisioning parameters are set by a combination of on-board switches and software control.

Only those system parameters fixed at installation time (for example, DS1 line buildouts) are set with on-board switches. Some parameters needed for typical installations, such as line coding, that may need to change later are settable by switches and overridable by software. This allows typical installations to be performed without a CIT. Other parameters that require a wide range of options or in-service changes must be set under software control. For example, PM thresholds and VT1.5 cross-connections can be customized for each installation using the CIT interface.

Default Provisioning

Installation provisioning is minimized with thoughtfully chosen default values set in the factory. Every parameter has a factory default value. These factory defaults for

* For the OC-1 interface, the STS-1 number is always 1.

software parameters are maintained in the SYSCTL circuit pack, and a single CIT command is provided to restore all default values. All provisioning data is stored in nonvolatile memory to prevent data loss during power failures and maintenance operations.

Remote Provisioning

Software control allows remote provisioning of the DDM-2000 FiberReach Multiplexer. This feature is provided especially for parameters likely to change in service, in support of centralized operations practices.

Automatic Provisioning on Circuit Pack Replacement

Replacement of a failed circuit pack is simplified by automatic provisioning of the current circuit pack values. The SYSCTL circuit pack maintains a provisioning map of the entire shelf, so when a transmission or synchronization pack is replaced, the SYSCTL circuit pack automatically downloads values to the new circuit pack. If the SYSCTL circuit pack is ever replaced, provisioning data, except for the line buildout (LBO) settings, from every other circuit pack in the shelf is automatically uploaded to the nonvolatile memory of the new SYSCTL circuit pack.

Feature Packaging Provisioning

Certain software features are available only through a special licensing agreement with Lucent. Currently VT performance monitoring and DS1 performance monitoring are available for the DDM-2000 FiberReach Multiplexer. These features are enabled by privileged user logins according to the licensing agreement, using the **`set-feat`** command and can be reviewed using the **`rtrv-feat`** command. These features are optional and may not be active on all systems. For details on these and other commands, refer to Chapter 11, "Commands and Reports."

Open Systems Interconnection (OSI) Provisioning

DDM-2000 FiberReach supports OSI interworking between DDM-2000 FiberReach, OC-3, and OC-12 Multiplexers. In a given subnetwork, the network elements (NEs) on each side of an optical span must have their "userside/networkside" (OSI terminology) parameters provisioned to opposite values. These values are set using the **`set-fecom`** command on the DDM-2000 shelves. Local procedures should determine the "user" and "network" side of a span. For example, the CO terminal can be designated the network side and the

RT site the user side. It does not matter as long as the two sides are opposite values. See the **set-fecom** command page in Chapter 11 for more details.

The network service access point (NSAP) is a multiple part address that uniquely identifies an NE for OSI interworking purposes. A unique NSAP is programmed into the FiberReach BBG8/BBG8B SYSCTL circuit pack at the factory. This default NSAP value is adequate to operate current networks. NSAP provisioning, using the **ent-ulsdcc** command, will be used as part of future upgrade procedures. See the **ent-ulsdcc** command in Chapter 11, "Commands and Reports," for more information on NSAP provisioning.

Port State Provisioning

Port state provisioning is a feature provided on DDM-2000 Multiplexers that suppresses alarm reporting and performance monitoring by supporting multiple states [automatic (AUTO), in-service (IS), and not-monitored (NMON)] for low speed DS1 ports.

Ports without signals (undriven) are in the automatic (AUTO) state until changed to the in-service (IS) state when a signal is present. The **set-state-t1** command allows a user to change the state of a port to the not monitored (NMON) state or from the NMON state to the AUTO state. The **rtrv-state-eqpt** and **rtrv-t1** commands allow a user to retrieve current port states. The **upd** command allows a user to change the port state of all undriven ports from IS to AUTO.

Channel State Provisioning

Channel state provisioning is a feature provided on DDM-2000 FiberReach Multiplexers that suppresses reporting of alarms and events for VT1.5 and STS-1 channels during provisioning by supporting multiple states (automatic, in-service, and not-monitored) for VT1.5 and STS-1 channels. The **rtrv-state-vt1** and **rtrv-state-sts1** commands allow a user to retrieve current channel states.

While an end-to-end circuit is being set up, particularly during VT1.5 cross-connection provisioning, several transient maintenance signals may result. Without automatic channel state provisioning, these are reported as alarms or events. The technicians are expected to ignore these transient alarms and initiate corrective action only if the alarms persist after the provisioning is completed. To avoid the confusion created by this, DDM-2000 FiberReach Multiplexers provide automatic channel state provisioning.

A VT1.5 or STS-1 channel stays in the default automatic (AUTO) state until a valid signal (a framed non-AIS or non-LOP signal) is received on that channel. While in AUTO state, no alarms or events are reported on the channel by the DDM-2000 FiberReach Multiplexer. On receiving a valid signal, which occurs when the end-

to-end circuit is completely provisioned, the channel automatically changes to the IS state, and normal alarm and event reporting starts. An additional state, NMON, is also supported in which alarm and event reporting is suppressed regardless of the validity of the signal being received on the channel. Like the port state provisioning capability provided for DS1 ports, the user can use CIT commands to manually change a channel from IS or AUTO to NMON, and from NMON to AUTO. A direct change from NMON to IS is not allowed. See the **`set-state-sts1`**, **`set-state-vt1`**, **`rtrv-state-sts1`**, **`rtrv-state-vt1`** and **`upd`** commands.

Line State Provisioning

For DDM-2000 FiberReach, OC-1 ring interfaces can be set manually to NMON or IS.

AIS or Unequipped Provisioning

In DDM-2000 FiberReach the shelf can be optioned to send an "STS/VT-path unequipped" signal instead of path AIS when a DS1 pack is removed or when a cross-connection is removed.

Data Communications Channel (DCC) Provisioning

The DCC is used for operations communications between NEs. The DCC is part of the SONET overhead on all optical transmission lines.

In a given subnetwork, the NEs on each side of an optical span must have their "userside/networkside" (OSI terminology) parameters provisioned to opposite values. Local procedures should determine the "user" and "network" side of a span. For example, the CO terminal can be designated the network side and the RT site the user side. It does not matter as long as the two sides are opposite values. See the TOP section of this manual for provisioning procedures.

In ring systems, there is one DCC assigned for the "m1" ring and another DCC for the "m2" ring.

Operations Interworking (OI) Provisioning

OI provides the capability to access, operate, administer, maintain, and provision remote Lucent NEs from other NEs in a subnetwork or from a centralized OS.

OI is supported among systems that are connected through the DCC. Table 8-1 lists the SONET software compatibility within a subnetwork for the Lucent 2000

Product Family systems. All configurations listed support OI. The table lists all possible software combinations. Combinations not listed are not supported.

Table 8-1. OI Software Compatibility

Release	FiberReach 3.0	FiberReach 3.1	FiberReach 4.0
OC-3, R13.0 & R15.0	X	X	X
OC-12, R7.0	X	X	X
SLC-2000, R3.3	X	X	X
SLC-2000, R4.4	X	X	X
FT-2000, R8.1, R9.0/9.1	X	X	X
TITAN 5500/S, R5.0	X	X	X
ITM SNC, 5.0	X	—	—
ITM SNC, 6.0	X	—	—
CPro-2000, R8.0	X	X	—
CPro-2000, R9.0	X	X	—
CPro-2000, R10.0	X	X	X

OI features include the following:

- Remote OS access via the TL1/X.25 GNE
- Remote CIT login (remote technician access)
- Remote software download and copy.

See also 824-102-144, *Lucent Technologies 2000 Product Family Multi-Vendor Operations Interworking Guide.*

Software Compatibility

Table 8-2 lists the SONET software compatibility within a subnetwork for the Lucent 2000 Product Family systems. All configurations listed support Operations Interworking (OI). The table lists all possible software combinations. Combinations not listed are not supported.

Table 8-2. Software Compatibility

Release	Fiber Reach R2.2 with 26G2-U	Fiber Reach R3.0 with 26G2-U	Fiber Reach R3.1 with 26G2-U	Fiber Reach R4.0 with 26G2-U	Fiber Reach R2.2 with 28-Type	Fiber Reach R3.1 with 28-Type	Fiber Reach R4.0 with 28-Type	Fiber Reach R4.0 with 29-Type
OC-3, R7.2	X*				X			
OC-3, R8.0	X*				X*			
OC-3, R8.1	X*				X*			
OC-3, R9.1	X				X			
OC-3, R11.0	X				X			
OC-3, R11.1	X				X			
OC-3, R13.0		X	X	X		X	X	X
OC-3, R15.0		X	X	X		X	X	X
OC-12, R5.1	X*				X			
OC-12, R5.2	X*				X			
OC-12, R7.0		X*	X*	X*		X	X	X
FiberReach, R3.0		X	X	X		X*	X*	X*
FiberReach, R3.1		X	X	X		X	X	X*
FiberReach, R4.0		X	X	X		X	X	X
SLC-2000, R3.3								
SLC-2000, R4.4†								
SLC-2000, R4.6†								
FT-2000, R7.2	X*				X			
FT-2000, OC-48 R8.0		X*	X*	X*		X	X	X
FT-2000, OC-48 R8.1		X*	X*	X*		X	X	X
FT-2000, R9.0		X*	X*	X*		X	X	X

* FiberReach shelf is not directly connected.

† SLC-2000 R4.4 through 4.6 can be used for NBS FITL applications. Contact Technical Support, Access Products for compatibility details.

Table 8-3 lists the software and circuit pack compatibility matrix for FiberReach Releases 2.2 through 4.0.

Table 8-3. Software and Circuit Pack Compatibility Matrix

FiberReach Product/Release	MAIN	FN	Low-Speed Groups	SYSCTL
Release 2.2	26G-U 26G2-U	—	BBF1B BBF3B BBF6 177A*	BBG8/ BBG8B
	28G-U/ 28G2-U	—	BBF1B BBF3B BBF6 BBF8+ 177A*	
Release 3.0	26G-U 26G2-U	—	BBF1B BBF3B BBF6 177A*	BBG8/ BBG8B
Release 3.1	26G-U 26G2-U	—	BBF1B BBF3B BBF6 177A*	BBG8/ BBG8B
	28G-U/ 28G2-U	22-Type	—	BBG8/ BBG8B
		BBG19 BBG4 BBG4B	BBF1B BBF3B BBF6 BBF8* + 177A*	
Release 4.0	26G-U 26G2-U	BBG19 BBG4 BBG4B	BBF1B BBF3B BBF6 177A*	BBG8/ BBG8B
	28G-U 28G2-U	22-Type	—	BBG8/ BBG8B
		BBG19 BBG4 BBG4B	BBF1B BBF3B BBF6 BBF8* † 177A*	
	29G-U/ 29H-U	22-Type	BBF1B	BBG8/ BBG8B
		BBG19 BBG4 BBG4B	BBF3B BBF6 BBF8* + 177A*	

* The 177A retainer is required in any unused low-speed slots when partially equipped and 1X7 protected.

† The following rules and restrictions apply when mixing HDSL with Quad DS1 packs:
-In 1x1, up to 2 BBF1(B) or BBF3(B), 1 for service and 1 for protect, can be mixed with up to 2 BBF8s, one for service and one for protect.
-In 1x7, if 3 HDSL (BBF8) circuit packs are used in Low Speed (either 1 for protect and 2 for service, or 0 for protect and 3 for service), no mixing is allowed.
-Up to 2 BBF8s can be mixed with up to 3 BBF1(B)/BBF3(B). No protect of either circuit pack type is allowed.
-Up to 1 BBF8 can be mixed with up to 5 BBF1(B)/BBF3(B). No protect of either circuit pack type is allowed.
-If Low Speed is equipped with 8 BBF1(B)/BBF3(B), then no BBF8 is allowed.
-No T1EXT can be mixed with HDSL.

NSAP Provisioning

The network services access point (NSAP) is a multiple part address that uniquely identifies each NE for OI purposes. The NSAP is used for subnetwork DCC communications using the OSI protocol. A unique NSAP is programmed into the SYSCTL circuit pack at the factory and does not have to be modified by the user unless subnetwork partitioning is necessary. This default NSAP value is adequate to operate typical subnetworks. Subnetwork partitioning is accomplished by assigning NEs to different areas. An NE's area address is one of the subfields within its NSAP. The **ent-ulsdcc-13** command is used to modify an NEs NSAP. See the **ent-ulsdcc-13** commands in Chapter 11, "Commands and Reports," for more information on NSAP provisioning.

TARP Provisioning

Although TARP functions automatically, using standard default values and without any user provisioning, DDM-2000 allows provisioning of the following TARP parameters. All TARP parameters are provisioned by the CIT and TL1 **ent-ulsdcc-l4** command and include the following:

- Lifetime
- Manual Adjacency
- Timers
- Loop Detection Buffer (LDB) Flush Timer
- TDC Enable/Disable
- TDC TID-NSAP Entries.

It is recommended that TARP default values always be used, with the possible exception of Manual Adjacency and the TDC parameters. TARP Manual Adjacency may be used to propagate TARP messages beyond any non-TARP nodes in a subnetwork, if necessary. In the unlikely event the TDC contains inaccurate information, the TDC parameters may be used to update the TDC.

Eliminated Provisioning: Because DDM-2000 FiberReach Releases 3.0 and later do not support Lucent Directory Services (LDS) or Remote NE Status features, the following OI-related provisioning is no longer necessary:

- AGNE
- Alarm Group Number
- NE Number
- Site Number
- TBOS Number.

Selectable Parameters

Switch Selectable Parameters

Table 8-4 describes the parameters provisionable via hardware switches. Refer to the command pages in Chapter 11, "Commands and Reports," for a complete explanation of parameters.

Table 8-4. Parameters Provisionable via Hardware Switches

Parameter	Range	Pack	Com-mand (Note)
Product ID	MEGA STAR	SYSCTL	`rtrv-ne`
DCC connection	WBS, not WBS	SYSCTL	
DS1 line coding *	AMI, B8ZS	DS1, DS1PM, T1EXT	`rtrv-t1`
DS1 LBO†	5 settings (cable dependent)	DS1, DS1PM	

***** CIT can override switch settings. (Factory default is *noOverride*.) Parameter can be set for each port.

† Parameter can be set for each circuit pack.

CIT Selectable Parameters

Table 8-5 describes the parameters provisionable via the CIT. Refer to the command pages in Chapter 11, "Commands and Reports," for a complete explanation of parameters. Additional information on the ID parameters is provided in the "Identifiers" section immediately following Table 8-5.

Table 8-5. DDM-2000 FiberReach Parameters Provisionable via the CIT

Parameter	Range	Default (Note 1)	Command (Note 2)
Date Time	current value current value	70-01-01 00:00:00	**set-date** **set-date**
Target ID (system name) CO/RT select RNE stat Alarm Group ID (almgrp) AGNE VT Uneqpd./AIS insert	20 characters CO, RT enabled, disabled 1 - 255 yes, no Uneqpd., AIS	LT-DDM-2000 RT disabled 255 no AIS	**set-ne** **set-ne** **set-ne** **set-ne** **set-ne** **set-ne**
CIT page length	0 (pager off), 3-150 rows	24	**set-link**
PM thresholds	See PM Table	-	**set-pmthres**
Alarm holdoff delay Alarm clear delay Power minor alarm level	0-30 sec 0-30 sec MN, MJ	2 10 MN	**set-attr-alm** **set-attr-alm** **set-attr-alm**
OC1 degrade threshold	10^{-5} to 10^{-9}	10^{-6}	**set-oc1**
syncmsg	kbyte,sbyte,disabled	kbyte	**set-oc3**
STS-1 path signal degrade threshold NSA STS-1 path AIS alarm level SA STS-1 path AIS alarm level STS-1 channel state	10^{-5} to 10^{-9} MN, NR CR, NA NMON, AUTO†	0 (disabled) MN MN AUTO	**set-sts1** **set-sts1** **set-sts1** **set-state-sts1**
VT1.5 path signal degrade threshold¶ NSA VT path AIS SA VT path AIS VT channel state¶	10^{-5} to 10^{-8} MN, NR MJ, NR NMON, AUTO†	10^{-6} (disabled) MN MJ AUTO	**set-vt1** **set-vt1** **set-vt1** **set-state-vt1**
See notes and footnotes at end of table.			

Table 8-5. DDM-2000 FiberReach Parameters Provisionable via the CIT (Continued)

Parameter	Range	Default (Note 1)	Command (Note 2)
DS1 line coding*	AMI,B8ZS,noOverride‡	noOverride	**set-tl***
DS1 alarm level*	MJ, MN, NA	NA	**set-tl***
DS1 AIS insertion*	yes, no	yes	**set-tl***
DS1 failure threshold*	10^{-3}, 10^{-6}	10^{-3}	**set-tl***
DS1 BPV to LOS*	yes, no	no	**set-tl***
DS1 PM Mode*	off,on	off	**set-tl***
DS1 PM Format*	sf, esf, esfn	esf	**set-tl***
DS1 primary port state*	NMON, AUTO‡	AUTO	**set-state-tl***
Environmental alarm level	CR, MJ, MN, NA	MN	**set-attr-env**
Environmental alarm type	10 characters		**set-attr-env**
Environmental alarm description	26 characters		**set-attr-env**
Control point description	26 characters		**set-attr-cont**
Far end communication over DCC §	enabled, disabled	enabled	**set-fecom**
DCC identity for OSI subnetwoks	userside, networkside	see command page	**set-fecom**
Set security §	enabled,disabled,lockout	disabled	**set-secu**
CIT security §	enabled,disabled,lockout	disabled	**set-secu**
CIT timeout (minutes) §	0-120	15	**set-secu**
DCC security §	enabled,disabled,lockout	disabled	**set-secu**
DCC timeout (minutes) §	0-120	15	**set-secu**
CIT port type §	CIT, TL1	CIT	**set-secu**
CIT TL1 baudrate §	1200, 2400, 4800, 9600, 19200	9600	**set-secu**
CIT TL1 echo §	enabled, disabled	enabled	**set-secu**
X25 asynch baudrate §	1200, 2400, 4800, 9600, 19200	9600	**set-secu**
X25 asynch echo §	enabled, disabled	enabled	**set-secu**
Sync Timing Source	main-1, main-2	main-1	**set-sync**
SYNC mode switching	revertive, nonrevertive	revertive	**set-sync**
SYNC Autoreconfiguration§	enabled, disabled	26-type OLIU enables 28-type OLIU disabled	**set-sync**
Feature Packaging § VT PM or DS1 PM	enabled, disabled	disabled	**set-feat**
NSAP **(Layer 3 provisioning)****			
L3org (Organization ID)	6 hex digits	000000	**ent-ulsdcc-l3**
L3res(Reserved)	4 hex digits	0000	**ent-ulsdcc-l3**
L3rd (Routing Domain)	4 hex digits	0000	**ent-ulsdcc-l3**
L3area(Area)	4 hex digits	0000	**ent-ulsdcc-l3**
See notes and footnotes at end of table.			

Table 8-5. DDM-2000 FiberReach Parameters Provisionable via the CIT (Continued)

Parameter	Range	Default (Note 1)	Command (Note 2)
TARP **(Layer 4 provisioning)****			
L4tlif (lifetime parameter)	1 to 65535	100	**ent-ulsdcc-l4**
L4ajsys(Manual adjacency parameters)	12 hex digits	No default. See Note 3.	**ent-ulsdcc-l4**
L4ajorg	6 hex digits	NSAP Org. ID field of the local NE.	**ent-ulsdcc-l4**
L4ajres	4 hex digits	NSAP reserved field of the Local NE.	**ent-ulsdcc-l4**
L4ajrd	4 hex digits	NSAP routing domain field of the local NE.	**ent-ulsdcc-l4**
L4ajarea	4 hex digits	NSAP area field of the local NE.	**ent-ulsdcc-l4**
L4t1tm (timer parameters)	1 to 3600 seconds	15 seconds	**ent-ulsdcc-l4**
L4t2tm	1 to 3600 seconds	25 seconds	**ent-ulsdcc-l4**
L4t3tm	1 to 3600 seconds	40 seconds	**ent-ulsdcc-l4**
L4t4tm	1 to 3600 seconds	20 seconds	**ent-ulsdcc-l4**
L4lftm (loop detection buffer flush timer)	1 to 1440 minutes	5 minutes	**ent-ulsdcc-l4**
L4etdc (TARP data cache)	enabled, disabled	enabled	**ent-ulsdcc-l4**
L4tdcsys (TARP data cache parameters)	12 hex digits	No default. See Notes 4 and 5.	**ent-ulsdcc-l4**
L4tdctid	20 characters	No default.	**ent-ulsdcc-l4**
L4tdcorg	6 hex digits	NSAP Org. ID field of the local NE.	**ent-ulsdcc-l4**
L4tdcres	4 hex digits	NSAP Reserved field of the local NE	**ent-ulsdcc-l4**
L4tdcrd	4 hex digits	NSAP routing domain field of the local NE.	**ent-ulsdcc-l4**
L4tdcarea	4 hex digits	NSAP area field of the local NE.	**ent-ulsdcc-l4**
ACID (OS type)**	See command pages.		**ent-tllmsgmap**
TL1 autonomous message type**	See command pages.		**ent-tllmsgmap**
Action to assoc. message type to OS**	enabled, disabled	enabled	**ent-tllmsgmap**
Cross-connection type	twoway, locked	twoway	**ent-crs-vt1**
Ring ID for locked	m1,m2	See command pages	**ent-crs-vt1**
See notes and footnotes on the next page			

Notes/Footnotes:

1. Default means factory default (the CIT prompts display current provisioned values).

2. To view the current values, precede these commands with **`rtrv-`** instead of **`set- or ent-`**.

3. This is the only parameter that is required to enter a manual adjacency. If only this parameter is specified, all of the other user settable NSAP field parameters are set to their default values in the TARP Manual Adjacency list. If no value is specified, the user will not be prompted for the rest of the L4aj parameters.

4. If this parameter is specified, then L4tdctid must also be specified for the entry to be made in the TARP Data Cache.

5. This is a required parameter for a TARP Data Cache entry. If only this parameter is specified, all of the other user settable NSAP field parameters are set to their default values in the TARP Data Cache entry. If no value is specified, the user will not be prompted for the rest of the L4tdc parameters.

***** Parameter can be set for each port.

† AUTO means the port or channel is ready to be automatically provisioned via signal detection.

‡ No Override means read and use switch settings on circuit pack.

§ This command is available to privileged users only.

¶ Parameters can be set for each channel.

****** When security is enabled, this command is available to privileged users only (default is “disable”). This is a Release 3.0 feature.

Identifiers

The following identifiers (ID) are used for the TID and NSAP address. See also the *Lucent Technologies 2000 Product Family Multi-Vendor Operations Interworking Guide,* 824-102-144.

- **TID:** The target identifier (TID) is a 20-character parameter that is set through the CIT using the **`set-ne`** command. The TID is used in the **`rlgn`** command to identify an NE to which a CIT remote login session is being established. The TID is also used by an OS to identify NEs using the TL1 message-based communications protocol.

After the **`init-sys:all`** or **`init-sys:systcl`** command is entered, the system sets the TID to a default value of LT-DDM-2000. The TID must be unique among all NEs. The default TID may be changed using the **`set-ne`** command to a unique user-assigned value recognized by the OS.

- **NSAP:** The network services access point (NSAP) is a multiple part address that uniquely identifies the NE. The NSAP is used for subnetwork DCC communications using the OSI protocol. The NSAP is set to unique values assigned to control hardware at the factory and does not have to be modified by the user unless subnetwork partitioning is necessary. Subnetwork partitioning is accomplished by assigning NEs to different areas. An NE's area address is one of the subfields within its NSAP. The **`ent-ulsdcc-l3`** command is used to modify an NE's NSAP.
- **CO/RT:** The CO/RT parameter for CO or RT identifies the system as having the characteristics of a CO or RT. The default is RT. The parameter controls the operation of the miscellaneous discretes and the external fan control.

Performance Monitoring (PM) Parameters Provisionable via the CIT

For a list of PM parameters provisionable via the CIT, see Table 10-23 in the "Technical Specifications" chapter of this manual.

Cross-Connection Provisioning

Traffic is transported through the SONET network via dedicated, software-provisioned, VT1.5 or STS-1 time slot transmission paths. For each transmission path through a network ring, a cross-connection is needed in every NE (node) on the ring. The time slot interchange (TSI) feature of DDM-2000 FiberReach Multiplexers offers users flexibility in directing traffic in and out of these systems to support a wide variety and range of customer applications.

In an hairpin application, no cross-connection using a high speed interfaces is needed on the node in the hosting ring because no signal is transported through the high-speed interfaces in the host ring.

For the DDM-2000 Multiplexers, cross-connections of both ring paths are entered with a single command entry per shelf. This minimizes the possibility of provisioning a circuit without a protection channel. The ring channels are always carried within the OLIU circuit packs in the Main 1 and Main 2 slots. Cross-connections in DDM-2000 Multiplexers are made by specifying the SONET rate (VT1.5 or STS-1), the end point addresses (access identifiers), the cross-connection type (two way, locked, etc.) and, in some cases, the ring direction (ring=m1, ring=m2, etc.). In DDM-2000 Multiplexers, each single cross-connection command establishes a bidirectional cross-connection. There is no need to

identify ring channels in Main 1 as different from Main 2 because both rings are always provisioned with the same information.

Cross-Connection Types

There are three different VT1.5 cross-connection types for the DDM-2000 FiberReach Multiplexer: termination/drop, pass-through, and locked.

Termination/Drop Cross-Connection

The termination/drop cross-connection is used in all path-switched ring applications for DDM-2000 FiberReach, where DS1 low-speed signals are cross-connected to VT1.5 channels in both rotations of the rings terminating on the high-speed interfaces. With this cross-connection, all added signals are bridged on to both rotations of the ring; the better of the two signals received from the two rotations of the ring is dropped.

As shown in Table 8-6 and Table 8-7, at the entry and exit points, the VT channels are cross-connected to the low-speed ports (for example, **`{ls group}-{slot#}-{port# on slot}, a-1-4)`**. These are called "drop" connections. For example, the command **`ent-crs-vt1:m-1-3-4,b-1-4`** connects the fourth low-speed port associated with slot 1 of low-speed group B to the fourth VT1.5 within the third VT group within the first STS-1 of both rings.

Table 8-6. DDM-2000 FiberReach Manual VT1.5 Cross Connections (Termination/Drop) in a 1 x 1 Configuration

From			To		
Address	**OLIU**		**Address**	**CP Type (Notes)**	**Example Commands**
m-1-{1-7}-{1-4,all}	OC-1	<-->	a-1-{1-4,all}	DS1	ent-crs-vt1:m-1-1-1,a-1-1
m-1-{1-7}-{1-4,all}	OC-1	<-->	b-1-{1-4,all}	DS1	ent-crs-vt1:m-1-3-4,b-1-4
m-1-{1-7}-{1-4,all}	OC-1	<-->	c-1-{1-4,all}	DS1	ent-crs-vt1:m-1-3-3,c-1-3
m-1-{1-7}-{1-4,all}	OC-1	<-->	d-1-{1-4,all}	DS1	ent-crs-vt1:m-1-3-3,d-1-3
m-{1-3}-{1-7}-{1-4,all}	OC-3	<-->	a-1-{1-4,all}	DS1	ent-crs-vt1:m-1-1-1,a-1-1
m-{1-3}-{1-7}-{1-4,all}	OC-3	<-->	b-1-{1-4,all}	DS1	ent-crs-vt1:m-1-1-1,b-1-1
m-{1-3}-{1-7}-{1-4,all}	OC-3	<-->	c-1-{1-4,all}	DS1	ent-crs-vt1:m-1-1-1,c-1-1
m-{1-3}-{1-7}-{1-4,all}	OC-3	<-->	d-1-{1-4,all}	DS1	ent-crs-vt1:m-1-1-1,d-1-1
m-{1-12}-{1-7}-{1-4,all}	OC-12	<-->	a-1-{1-4,all}	DS1	ent-crs-vt1:m-1-1-1,a-1-1
m-{1-12}-{1-7}-{1-4,all}	OC-12	<-->	b-1-{1-4,all}	DS1	ent-crs-vt1:m-1-1-1,b-1-1

From			To		
Address	**OLIU**		**Address**	**CP Type (Notes)**	**Example Commands**
m-{1-12}-{1-7}-{1-4,all}	OC-12	<-->	c-1-{1-4,all}	DS1	ent-crs-vt1:m-1-1-1,c-1-1
m-{1-12}-{1-7}-{1-4,all}	OC-12	<-->	d-1-{1-4,all}	DS1	ent-crs-vt1:m-1-1-1,d-1-1
m-1-{1-7}-{1-4,all}	OC-1	<-->	a-1-{1-2,all}	T1EXT	ent-crs-vt1:m-1-1-1,a-1-2
m-1-{1-7}-{1-4,all}	OC-1	<-->	b-1-{1-2,all}	T1EXT	ent-crs-vt1:m-1-3-4,b-1-2
m-1-{1-7}-{1-4,all}	OC-1	<-->	c-1-{1-2,all}	T1EXT	ent-crs-vt1:m-1-3-3,c-1-1
m-1-{1-7}-{1-4,all}	OC-1	<-->	d-1-{1-2,all}	T1EXT	ent-crs-vt1:m-1-3-3,d-1-1
m-{1-3}{1-7,all}-{1-4,all}	OC-3	<-->	a-1-{1-2,all}	T1EXT	ent-crs-vt1:m-1-3-3,d-1-1
m-{1-3}{1-7,all}-{1-4,all}	OC-3	<-->	b-1-{1-2,all}	T1EXT	ent-crs-vt1:m-1-3-3,d-1-1
m-{1-3}{1-7,all}-{1-4,all}	OC-3	<-->	c-1-{1-2,all}	T1EXT	ent-crs-vt1:m-1-3-3,d-1-1
m-{1-3}{1-7,all}-{1-4,all}	OC-3	<-->	d-1-{1-2,all}	T1EXT	ent-crs-vt1:m-1-3-3,d-1-1
m-{1-3}-{1-7,all}-{1-4,all}	OC-3	<-->	a-1-{1-2,all}	HDSL*	ent-crs-vt1:m-1-3-3,a-1-1
m-{1-3}-{1-7,all}-{1-4,all}	OC-3	<-->	b-1-{1-2,all}	HDSL*	ent-crs-vt1:m-1-3-3,b-1-1
m-{1-3}-{1-7,all}-{1-4,all}	OC-3	<-->	c-1-{1-2,all}	HDSL*	ent-crs-vt1:m-1-3-3,c-1-1
m-{1-3}-{1-7,all}-{1-4,all}	OC-3	<-->	d-1-{1-2,all}	HDSL*	ent-crs-vt1:m-1-3-3,d-1-1
m-{1-12}{1-7,all}-{1-4,all}	OC-12	<-->	a-1-{1-2,all}	T1EXT	ent-crs-vt1:m-1-3-3,d-1-1
m-{1-12}{1-7,all}-{1-4,all}	OC-12	<-->	b-1-{1-2,all}	T1EXT	ent-crs-vt1:m-1-3-3,d-1-1
m-{1-12}{1-7,all}-{1-4,all}	OC-12	<-->	c-1-{1-2,all}	T1EXT	ent-crs-vt1:m-1-3-3,d-1-1
m-{1-12}{1-7,all}-{1-4,all}	OC-12	<-->	d-1-{1-2,all}	T1EXT	ent-crs-vt1:m-1-3-3,d-1-1
m-{1-12}-{1-7,all}-{1-4,all}	OC-12	<-->	a-1-{1-2,all}	HDSL*	ent-crs-vt1:m-1-3-3,a-1-1
m-{1-12}-{1-7,all}-{1-4,all}	OC-12	<-->	b-1-{1-2,all}	HDSL*	ent-crs-vt1:m-1-3-3,b-1-1
m-{1-12}-{1-7,all}-{1-4,all}	OC-12	<-->	c-1-{1-2,all}	HDSL*	ent-crs-vt1:m-1-3-3,c-1-1
m-{1-12}-{1-7,all}-{1-4,all}	OC-12	<-->	d-1-{1-2,all}	HDSL*	ent-crs-vt1:m-1-3-3,d-1-1

Notes

1.*Locked Signals:* Cross-Connect type (CCT) must be “locked” (locked).

*When using HDSL (BBF8) circuit pack in the Low Speed area, the 28G-U/28G2-U or the 29G-U OLIU must be used in the main unit slots of the FiberReach shelf and you are limited to three HDSL (BBF8) circuit packs including protection.

The following rules and restrictions apply when mixing HDSL with Quad DS1 packs:
-In 1x1, up to 2 BBF1(B) or BBF3(B), 1 for service and 1 for protect, can be mixed with up to 2 BBF8s, one for service and one for protect.
-In 1x7, if 3 HDSL (BBF8) circuit packs are used in Low Speed (either 1 for protect and 2 for service, or 0 for protect and 3 for service), no mixing is allowed.
-Up to 2 BBF8s can be mixed with up to 3 BBF1(B)/BBF3(B). No protect of either circuit pack type is allowed.
-Up to 1 BBF8 can be mixed with up to 5 BBF1(B)/BBF3(B). No protect of either circuit pack type is allowed.
-If Low Speed is equipped with 8 BBF1(B)/BBF3(B), then no BBF8 is allowed.
-No T1EXT can be mixed with HDSL.

Table 8-7. DDM-2000 FiberReach Manual VT1.5 Cross Connections (Termination/Drop) in a 1 x 7 Configuration

From			To		
Address	**OLIU**		**Address**	**CP Type (Notes)**	**Example Commands**
m-1-{1-7,all}-{1-4,all}	OC-1	<-->	a-1-{1-4,all} a-2-{1-4,all}	DS1	ent-crs-vt1:m-1-1-1,a-2-1
m-1-{1-7,all}-{1-4,all}	OC-1	<-->	b-1-{1-4,all} b-2-{1-4,all}	DS1	ent-crs-vt1:m-1-3-4,b-2-4
m-1-{1-7,all}-{1-4,all}	OC-1	<-->	c-1-{1-4,all} c-2-{1-4,all}	DS1	ent-crs-vt1:m-1-3-3,c-2-3
m-1-{1-7,all}-{1-4,all}	OC-1	<-->	d-1-{1-4}	DS1	ent-crs-vt1:m-1-3-3,d-2-3
m-{1-3}-{1-7,all}-{1-4,all}	OC-3	<-->	a-1-{1-4,all} a-2-{1-4,all}	DS1	ent-crs-vt1:m-1-3-3,a-2-3
m-{1-3}-{1-7,all}-{1-4,all}	OC-3	<-->	b-1-{1-4,all} b-2-{1-4,all}	DS1	ent-crs-vt1:m-1-3-3,b-2-3
m-{1-3}-{1-7,all}-{1-4,all}	OC-3	<-->	c-1-{1-4,all} c-2-{1-4,all}	DS1	ent-crs-vt1:m-1-3-3,c-2-3
m-{1-3}-{1-7,all}-{1-4,all}	OC-3	<-->	d-1-{1-4,all}	DS1	ent-crs-vt1:m-1-3-3,d-2-3
m-{1-3}-{1-7,all}-{1-4,all}	OC-3	<-->	a-1-{1-2,all} a-2-{1-2,all}	HDSL*	ent-crs-vt1:m-1-3-3,a-2-3
m-{1-3}-{1-7,all}-{1-4,all}	OC-3	<-->	b-1-{1-2,all} b-2-{1-2,all}	HDSL*	ent-crs-vt1:m-1-3-3,b-2-3
m-{1-3}-{1-7,all}-{1-4,all}	OC-3	<-->	c-1-{1-2,all} c-2-{1-2,all}	HDSL*	ent-crs-vt1:m-1-3-3,c-2-3

From			To		
Address	**OLIU**		**Address**	**CP Type (Notes)**	**Example Commands**
m-{1-3}-{1-7,all}-{1-4,all}	OC-3	<-->	d-1-{1-2,all}	HDSL*	ent-crs-vt1:m-1-3-3,d-2-3
m-{1-12-{1-7,all}-{1-4,all}	OC-12	<-->	a-1-{1-4,all} a-2-{1-4,all}	DS1	ent-crs-vt1:m-1-3-3,a-2-3
m-{1-12}-{1-7,all}-{1-4,all}	OC-12	<-->	b-1-{1-4,all} b-2-{1-4,all}	DS1	ent-crs-vt1:m-1-3-3,b-2-3
m-{1-12}-{1-7,all}-{1-4,all}	OC-12	<-->	c-1-{1-4,all} c-2-{1-4,all}	DS1	ent-crs-vt1:m-1-3-3,c-2-3
m-{1-12}-{1-7,all}-{1-4,all}	OC-12	<-->	d-1-{1-4,all}	DS1	ent-crs-vt1:m-1-3-3,d-2-3
m-{1-12}-{1-7,all}-{1-4,all}	OC-12	<-->	a-1-{1-2,all} a-2-{1-2,all}	HDSL*	ent-crs-vt1:m-1-3-3,a-2-2
m-{1-12}-{1-7,all}-{1-4,all}	OC-12	<-->	b-1-{1-2,all} b-2-{1-2,all}	HDSL*	ent-crs-vt1:m-1-3-3,b-2-2
m-{1-12}-{1-7,all}-{1-4,all}	OC-12	<-->	c-1-{1-2,all} c-2-{1-2,all}	HDSL*	ent-crs-vt1:m-1-3-3,c-2-2
m-{1-12}-{1-7,all}-{1-4,all}	OC-12	<-->	d-1-{1-2,all}	HDSL*	ent-crs-vt1:m-1-3-3,d-2-2
m-1-{1-7,all}-{1-4,all}	OC-1	<-->	a-1-{1-2,all} a-2-{1-2,all}	T1EXT	ent-crs-vt1:m-1-1-1,a-2-2
m-1-{1-7,all}-{1-4,all}	OC-1	<-->	b-1-{1-2,all} b-2-{1-2,all}	T1EXT	ent-crs-vt1:m-1-3-4,b-2-2
m-1-{1-7,all}-{1-4,all}	OC-1	<-->	c-1-{1-2,all} c-2-{1-2,all}	T1EXT	ent-crs-vt1:m-1-3-3,c-2-1
m-1-{1-7,all}-{1-4,all}	OC-1	<-->	d-1-{1-2}	T1EXT	ent-crs-vt1:m-1-3-3,d-2-1
m-{1-3}-{1-7,all}-{1-4,all}	OC-3	<-->	a-1-{1-2,all} a-2-{1-2,all}	T1EXT	ent-crs-vt1:m-1-3-3,a-2-3
m-{1-3}-{1-7,all}-{1-4,all}	OC-3	<-->	b-1-{1-2,all} b-2-{1-2,all}	T1EXT	ent-crs-vt1:m-1-3-3,b-2-3
m-{1-3}-{1-7,all}-{1-4,all}	OC-3	<-->	c-1-{1-2,all} c-2-{1-2,all}	T1EXT	ent-crs-vt1:m-1-3-3,c-2-3
m-{1-3}-{1-7,all}-{1-4,all}	OC-3	<-->	a-1-{1-2,all}	T1EXT	ent-crs-vt1:m-1-3-3,d-2-3
m-{1-12-{1-7,all}-{1-4,all}	OC-12	<-->	a-1-{1-2,all} a-2-{1-2,all}	T1EXT	ent-crs-vt1:m-1-3-3,a-2-2
m-{1-12-{1-7,all}-{1-4,all}	OC-12	<-->	b-1-{1-2,all} b-2-{1-2,all}	T1EXT	ent-crs-vt1:m-1-3-3,b-2-2
m-{1-12-{1-7,all}-{1-4,all}	OC-12	<-->	c-1-{1-2,all} c-2-{1-2,all}	T1EXT	ent-crs-vt1:m-1-3-3,c-2-2
m-{1-12}-{1-7,all}-{1-4,all}	OC-12	<-->	a-1-{1-2,all}	T1EXT	ent-crs-vt1:m-1-3-3,d-2-2

Notes 1.*Locked Signals:* Cross-Connect type (CCT) must be “locked” (locked).

*When using HDSL (BBF8) circuit pack in the Low Speed area, the 28G-U/28G2-U or the 29G-U OLIU must be used in the main unit slots of the FiberReach shelf and you are limited to three HDSL (BBF8) circuit packs including protection.

The following rules and restrictions apply when mixing HDSL with Quad DS1 packs:
-In 1x1, up to 2 BBF1(B) or BBF3(B), 1 for service and 1 for protect, can be mixed with up to 2 BBF8s, one for service and one for protect.
-In 1x7, if 3 HDSL (BBF8) circuit packs are used in Low Speed (either 1 for protect and 2 for service, or 0 for protect and 3 for service), no mixing is allowed.
-Up to 2 BBF8s can be mixed with up to 3 BBF1(B)/BBF3(B). No protect of either circuit pack type is allowed.
-Up to 1 BBF8 can be mixed with up to 5 BBF1(B)/BBF3(B). No protect of either circuit pack type is allowed.
-If Low Speed is equipped with 8 BBF1(B)/BBF3(B), then no BBF8 is allowed.
-No T1EXT can be mixed with HDSL.

Add Drop Cross-Connection for DS3

Refer to Table 8-8 for the Manual STS-1 Cross Connections (Termination Drop Cross-Connections).

Table 8-8. DDM-2000 FiberReach Manual STS-1 Cross Connections (Termination Drop Cross-Connections)

From			To		
Address	**OLIU**		**Address**	**CP Type (Notes)**	**Example Commands**
m-{1-3}	OC-3 (28-type)	<-->	f	DS3 (BBG4B/BBG4B, and BBG19)	ent-crs-sts1:m-1,f cct=twoway,ring={m1|m2}
m-{1-12}	OC-12 (29-type)				

Notes 1.Both main units must always be equipped with a OC-3 OLIUs or OC-12 OLIUs.

Pass-Through Cross-Connection

Another type of cross-connection allows a high-speed VT1.5 or STS-1 channel to be "passed-through" between two high-speed ring interfaces. This is used in all path-switched ring applications at nodes where traffic is not dropped. The high-speed time slot entering must be the same leaving in this type of cross-connection. In path switched rings, pass-through grooming (passing a signal on a ring time slot that is different from the ring time slot on which it was received) is not supported.

As shown in Table 8-9, pass through cross-connections are designated by using the same VT ring channel twice in the cross-connect address. For example, the single command **`ent-crs-vt1:m-1-5-3:m-1-5-3`** connects a pass through cross-connection both to and from the third VT1.5 within the fifth VT group within the first STS-1 of both the service and protection ring.

Table 8-9. DDM-2000 FiberReach Manual VT1.5 Cross Connections (Pass-Through) 1 X 1 and 1 X 7 Configurations

From			To		
Address	**OLIU**		**Address**	**CP Type (Notes)**	**Example Commands**
m-1-{1-7,all}-{1-4,all}	OC-1	<-->	m-1-{1-7,all}-{1-4,all}	OC-1	ent-crs-vt1:m-1-1-2,m-1-1-2 ent-crs-vt1:m-1-3-4,m-1-3-4
m-{1-3}{1-7,all}-{1-4,all}	OC-3	<-->	m-{1-3}{1-7,all}-{1-4,all}	OC-3	ent-crs-vt1:m-1-2-4,m-1-2-4
m-{1-12}{1-7,all}-{1-4,all}	OC-12	<-->	m-{1-12}{1-7,all}-{1-4,all}	OC-12	ent-crs-vt1:m-1-2-4,m-1-2-4

Notes 1.*Pass Through Signals*: Address on the left side *must be* identical to the address on the right side. There is no interchange function for "pass through" signals.

Depending on local practice, work orders will normally identify the low-speed port designations at the entry and exit points in the network and the target identifiers (TIDs) of the NEs at these points. The work order may also designate the VT1.5 ring channel which will be used for this service. If the work order does not designate a ring channel to use, use the command **`rtrv-crs-vt1;`** to identify all the ring channels that are currently unassigned. The work order also may not designate all the other NEs on the ring that need to be provisioned with pass through cross-connections. In this case, use successive **`rtrv-map-nei`** commands to identify the TIDs for all the NEs in a ring.

Pass-Through Cross-Connection for STS-1

Refer to Table 8-10 for a Manual STS-1 Cross Connection (Pass-Through).

Table 8-10. DDM-2000 FiberReach Manual STS-1 Cross Connections (Pass-Through)

From			To		
Address	**OLIU**		**Address**	**CP Type (Notes)**	**Example Commands**
m-{1-3}	OC-3 (28-type)	<-->	m-{1-3}	OC-3 OLIU (28-type)	ent-crs-sts1:m-1,m-1 cct=twoway,ring={m1,m2}
m-{1-12}	OC-12 (29-type)	<-->	m-{1-12}	OC-12 OLIU (29-type)	ent-crs-sts1:m-1,m-1 cct=twoway,ring={m1,m2}

Notes 1.Both main units must always be equipped with OC-3 OLIUs or OC-12 OLIUs.

2.*Pass Through Signals*: Address on the left side *must be* identical to the address on the right side. There is no interchange function for "pass through" signals.

Manual STS-3c Cross-Connections

The 0x1 OC-3c optical interface provides the ability of transporting STS-3c services on OC-3c low-speed function units optical interfaces that have been provisioned for 0X1 applications. The internal system's application default value for OC-3 OLIU (22-type) in the function unit is “0x1”. The CIT `ent-crs-sts3c` command is used with a two-way cross-connect type option. Refer to Table 8-11 for FiberReach STS-3c 0 x 1 Cross-Connections.

Table 8-11. DDM-2000 FiberReach STS-3c 0 X 1 Cross-Connections

From			To		
Address	**OLIU**		**Address**	**CP Type (Notes)**	**Example Commands**
m-1	OC-3 (28-type)	<-->	f-1	22-type OLIU	ent-crs-sts1:m-1,f-1 cct=two-way, cct=two-way
m-1 m-4 m-7 m-10	OC-12 (29-type)				

Notes 1.Both main units must always be equipped with OC-3 or OC-12 OLIUs.

Locked Cross-Connection

A variation of ring cross-connections, the locked cross-connection, is supported at the VT1.5 level to lock the path selector to a specified rotation of the ring where an external path selector is used. In this cross-connection, a DS1 or VT1.5 signal from the low-speed interface is cross-connected to the specified VT1.5 channel in the high-speed interface in the specified direction (Table 8-12 and Table 8-13). Any signal received in the VT1.5 channel from the other rotation of the ring is ignored.

Table 8-12. DDM-2000 FiberReach Manual VT1.5 Cross Connections (Locked) in a 1 x 1 Configuration

From			To		
Address	**OLIU**		**Address**	**CP Type (Notes)**	**Example Commands**
m-1-{1-7}-{1-4,all}	OC-1	<-->	a-1-{1-4,all}	DS1	ent-crs-vt1:m-1-1-1,a-1-1, cct=locked,ring={m1,m2}
m-1-{1-7}-{1-4,all}	OC-1	<-->	b-1-{1-4,all}	DS1	ent-crs-vt1:m-1-3-4,b-1-4, cct=locked,ring={m1,m2}
m-1-{1-7}-{1-4,all}	OC-1	<-->	c-1-{1-4,all}	DS1	ent-crs-vt1:m-1-3-3,c-1-3, cct=locked,ring={m1,m2}
m-1-{1-7}-{1-4,all}	OC-1	<-->	d-1-{1-4,all}	DS1	ent-crs-vt1:m-1-3-3,d-1-3, cct=locked,ring={m1,m2}
m-{1-3}-{1-7}-{1-4,all}	OC-3	<-->	a-1-{1-4,all}	DS1	ent-crs-vt1:m-1-1-1,a-1-2, cct=locked,ring={m1,m2}
m-{1-3}-{1-7}-{1-4,all}	OC-3	<-->	b-1-{1-4,all}	DS1	ent-crs-vt1:m-1-1-1,b-1-2, cct=locked,ring={m1,m2}
m-{1-3}-{1-7}-{1-4,all}	OC-3	<-->	c-1-{1-4,all}	DS1	ent-crs-vt1:m-1-1-1,c-1-2, cct=locked,ring={m1,m2}
m-{1-3}-{1-7}-{1-4,all}	OC-3	<-->	d-1-{1-4,all}	DS1	ent-crs-vt1:m-1-1-1,d-1-2, cct=locked,ring={m1,m2}
m-{1-12}-{1-7}-{1-4,all}	OC-12	<-->	a-1-{1-4,all}	DS1	ent-crs-vt1:m-1-1-1,a-1-2, cct=locked,ring={m1,m2}
m-{1-12}-{1-7}-{1-4,all}	OC-12	<-->	b-1-{1-4,all}	DS1	ent-crs-vt1:m-1-1-1,b-1-2, cct=locked,ring={m1,m2}
m-{1-12}-{1-7}-{1-4,all}	OC-12	<-->	c-1-{1-4,all}	DS1	ent-crs-vt1:m-1-1-1,c-1-2, cct=locked,ring={m1,m2}

From			To		
Address	**OLIU**		**Address**	**CP Type (Notes)**	**Example Commands**
m-{1-12}-{1-7}-{1-4,all}	OC-12	<-->	d-1-{1-4,all}	DS1	ent-crs-vt1:m-1-1-1,d-1-2, cct=locked,ring={m1,m2}
m-1-{1-7}-{1-4,all}	OC-1	<-->	a-1-{1-2,all}	T1EXT	ent-crs-vt1:m-1-1-1,a-1-2, cct=locked,ring={m1,m2}
m-1-{1-7}-{1-4,all}	OC-1	<-->	b-1-{1-2,all}	T1EXT	ent-crs-vt1:m-1-3-4,b-1-2, cct=locked,ring={m1,m2}
m-1-{1-7}-{1-4,all}	OC-1	<-->	c-1-{1-2,all}	T1EXT	ent-crs-vt1:m-1-3-3,c-1-1, cct=locked,ring={m1,m2}
m-1-{1-7}-{1-4,all}	OC-1	<-->	d-1-{1-2,all}	T1EXT	ent-crs-vt1:m-1-3-3,d-1-1, cct=locked,ring={m1,m2}
m-{1-3}-{1-7}-{1-4,all}	OC-3	<-->	a-1-{1-2,all}	T1EXT	ent-crs-vt1:m-1-1-1,a-1-2, cct=locked,ring={m1,m2}
m-{1-3}-{1-7}-{1-4,all}	OC-3	<-->	b-1-{1-2,all}	T1EXT	ent-crs-vt1:m-1-1-1,b-1-2, cct=locked,ring={m1,m2}
m-{1-3}-{1-7}-{1-4,all}	OC-3	<-->	c-1-{1-2,all}	T1EXT	ent-crs-vt1:m-1-1-1,c-1-2, cct=locked,ring={m1,m2}
m-{1-3}-{1-7}-{1-4,all}	OC-3	<-->	d-1-{1-2,all}	T1EXT	ent-crs-vt1:m-1-1-1,d-1-2, cct=locked,ring={m1,m2}
m-{1-3}-{1-7}-{1-4,all}	OC-3	<-->	a-1-{1-2,all}	HDSL*	ent-crs-vt1:m-1-1-1,a-1-2, cct=locked,ring={m1,m2}
m-{1-3}-{1-7}-{1-4,all}	OC-3	<-->	b-1-{1-2,all}	HDSL*	ent-crs-vt1:m-1-1-1,b-1-2, cct=locked,ring={m1,m2}
m-{1-3}-{1-7}-{1-4,all}	OC-3	<-->	c-1-{1-2,all}	HDSL*	ent-crs-vt1:m-1-1-1,c-1-2, cct=locked,ring={m1,m2}
m-{1-3}-{1-7}-{1-4,all}	OC-3	<-->	d-1-{1-2,all}	HDSL*	ent-crs-vt1:m-1-1-1,d-1-2, cct=locked,ring={m1,m2}
m-{1-12}-{1-7}-{1-4,all}	OC-12	<-->	a-1-{1-2,all}	T1EXT	ent-crs-vt1:m-1-1-1,a-1-2, cct=locked,ring={m1,m2}
m-{1-12}-{1-7}-{1-4,all}	OC-12	<-->	b-1-{1-2,all}	T1EXT	ent-crs-vt1:m-1-1-1,b-1-2, cct=locked,ring={m1,m2}
m-{1-12}-{1-7}-{1-4,all}	OC-12	<-->	c-1-{1-2,all}	T1EXT	ent-crs-vt1:m-1-1-1,c-1-2, cct=locked,ring={m1,m2}
m-{1-12}-{1-7}-{1-4,all}	OC-12	<-->	d-1-{1-2,all}	T1EXT	ent-crs-vt1:m-1-1-1,d-1-2, cct=locked,ring={m1,m2}
m-{1-12}-{1-7}-{1-4,all}	OC-12	<-->	a-1-{1-2,all}	HDSL*	ent-crs-vt1:m-1-1-1,a-1-2, cct=locked,ring={m1,m2}

From			To		Example Commands
Address	OLIU		Address	CP Type (Notes)	
m-{1-12}-{1-7}-{1-4,all}	OC-12	<-->	b-1-{1-2,all}	HDSL*	ent-crs-vt1:m-1-1-1,b-1-2, cct=locked,ring={m1,m2}
m-{1-12}-{1-7}-{1-4,all}	OC-12	<-->	c-1-{1-2,all}	HDSL*	ent-crs-vt1:m-1-1-1,c-1-2, cct=locked,ring={m1,m2}
m-{1-12}-{1-7}-{1-4,all}	OC-12	<-->	d-1-{1-2,all}	HDSL*	ent-crs-vt1:m-1-1-1,d-1-2, cct=locked,ring={m1,m2}

Notes

1. *Locked Signals:* Cross-Connect type (CCT) must be “locked” (locked).

*When using HDSL (BBF8) circuit pack in the Low Speed area, the 28G-U/28G2-U or the 29G-U OLIU must be used in the main unit slots of the FiberReach shelf and you are limited to three HDSL (BBF8) circuit packs including protection.

The following rules and restrictions apply when mixing HDSL with Quad DS1 packs:
-In 1x1, up to 2 BBF1(B) or BBF3(B), 1 for service and 1 for protect, can be mixed with up to 2 BBF8s, one for service and one for protect.
-In 1x7, if 3 HDSL (BBF8) circuit packs are used in Low Speed (either 1 for protect and 2 for service, or 0 for protect and 3 for service), no mixing is allowed.
-Up to 2 BBF8s can be mixed with up to 3 BBF1(B)/BBF3(B). No protect of either circuit pack type is allowed.
-Up to 1 BBF8 can be mixed with up to 5 BBF1(B)/BBF3(B). No protect of either circuit pack type is allowed.
-If Low Speed is equipped with 8 BBF1(B)/BBF3(B), then no BBF8 is allowed.
-No T1EXT can be mixed with HDSL.

Table 8-13. DDM-2000 FiberReach Manual VT1.5 Cross Connections (Locked) in a 1 x 7 Configuration

From			To		Example Commands
Address	OLIU		Address	CP Type (Notes)	
m-1-{1-7,all}-{1-4,all}	OC-1	<-->	a-1-{1-4,all} a-2-{1-4,all}	DS1	ent-crs-vt1:m-1-1-1,a-2-1, cct=locked,ring={m1,m2}
m-1-{1-7,all}-{1-4,all}	OC-1	<-->	b-1-{1-4,all} b-2-{1-4,all}	DS1	ent-crs-vt1:m-1-1-1,b-2-1, cct=locked,ring={m1,m2}
m-1-{1-7,all}-{1-4,all}	OC-1	<-->	c-1-{1-4,all} c-2-{1-4,all}	DS1	ent-crs-vt1:m-1-1-1,c-2-1, cct=locked,ring={m1,m2}

From			To		
Address	**OLIU**		**Address**	**CP Type (Notes)**	**Example Commands**
m-1-{1-7,all}-{1-4,all}	OC-1	<-->	d-1-{1-4,all}	DS1	ent-crs-vt1:m-1-1-1,d-2-1, cct=locked,ring={m1,m2}
m-{1-3}-{1-7,all}-{1-4,all}	OC-3	<-->	a-1-{1-4,all} a-2-{1-4,all}	DS1	ent-crs-vt1:m-1-1-1,a-1-2, cct=locked,ring={m1,m2}
m-{1-3}-{1-7,all}-{1-4,all}	OC-3	<-->	b-1-{1-4,all} b-2-{1-4,all}	DS1	ent-crs-vt1:m-1-1-1,b-1-2, cct=locked,ring={m1,m2}
m-{1-3}-{1-7,all}-{1-4,all}	OC-3	<-->	c-1-{1-4,all} c-2-{1-4,all}	DS1	ent-crs-vt1:m-1-1-1,c-1-2, cct=locked,ring={m1,m2}
m-{1-3}-{1-7,all}-{1-4,all}	OC-3	<-->	d-1-{1-4,all}	DS1	ent-crs-vt1:m-1-1-1,d-1-2, cct=locked,ring={m1,m2}
m-{1-12}-{1-7,all}-{1-4,all}	OC-12	<-->	a-1-{1-4,all} a-2-{1-4,all}	DS1	ent-crs-vt1:m-1-1-1,a-1-2, cct=locked,ring={m1,m2}
m-{1-12}-{1-7,all}-{1-4,all}	OC-12	<-->	b-1-{1-4,all} b-2-{1-4,all}	DS1	ent-crs-vt1:m-1-1-1,b-1-2, cct=locked,ring={m1,m2}
m-{1-12}-{1-7,all}-{1-4,all}	OC-12	<-->	c-1-{1-4,all} c-2-{1-4,all}	DS1	ent-crs-vt1:m-1-1-1,c-1-2, cct=locked,ring={m1,m2}
m-{1-12}-{1-7,all}-{1-4,all}	OC-12	<-->	d-1-{1-4,all}	DS1	ent-crs-vt1:m-1-1-1,d-1-2, cct=locked,ring={m1,m2}
m-1-{1-7,all}-{1-4,all}	OC-1	<-->	a-1-{1-2,all} a-2-{1-2,all}	T1EXT	ent-crs-vt1:m-1-1-1,a-2-2, cct=locked,ring={m1,m2}
m-1-{1-7,all}-{1-4,all}	OC-1	<-->	b-1-{1-2,all} b-2-{1-2,all}	T1EXT	ent-crs-vt1:m-1-1-1,b-2-2, cct=locked,ring={m1,m2}
m-1-{1-7,all}-{1-4,all}	OC-1	<-->	c-1-{1-2,all} c-2-{1-2,all}	T1EXT	ent-crs-vt1:m-1-1-1,c-2-2, cct=locked,ring={m1,m2}
m-1-{1-7,all}-{1-4,all}	OC-1	<-->	d-1-{1-2,all}	T1EXT	ent-crs-vt1:m-1-1-1,d-2-2, cct=locked,ring={m1,m2}
m-{1-3}-{1-7,all}-{1-4,all}	OC-3	<-->	a-1-{1-2} a-2-{1-2,all}	T1EXT	ent-crs-vt1:m-1-1-1,a-1-2, cct=locked,ring={m1,m2}
m-{1-3}-{1-7,all}-{1-4,all}	OC-3	<-->	b-1-{1-2} b-2-{1-2,all}	T1EXT	ent-crs-vt1:m-1-1-1,b-1-2, cct=locked,ring={m1,m2}
m-{1-3}-{1-7,all}-{1-4,all}	OC-3	<-->	c-1-{1-2} c-2-{1-2,all}	T1EXT	ent-crs-vt1:m-1-1-1,c-1-2, cct=locked,ring={m1,m2}
m-{1-3}-{1-7,all}-{1-4,all}	OC-3	<-->	d-1-{1-2}	T1EXT	ent-crs-vt1:m-1-1-1,a-1-2, cct=locked,ring={m1,m2}
m-{1-3}-{1-7,all}-{1-4,all}	OC-3	<-->	a-1-{1-2} a-2-{1-2,all}	HDSL*	ent-crs-vt1:m-1-1-1,a-1-2, cct=locked,ring={m1,m2}
m-{1-3}-{1-7,all}-{1-4,all}	OC-3	<-->	b-1-{1-2} b-2-{1-2,all}	HDSL*	ent-crs-vt1:m-1-1-1,b-1-2, cct=locked,ring={m1,m2}

From			To		
Address	**OLIU**		**Address**	**CP Type (Notes)**	**Example Commands**
m-{1-3}-{1-7,all}-{1-4,all}	OC-3	<-->	c-1-{1-4,all} c-2-{1-4,all}	HDSL*	ent-crs-vt1:m-1-1-1,c-1-2, cct=locked,ring={m1,m2}
m-{1-3}-{1-7}-{1-4,all}	OC-3	<-->	d-1-{1-2,all}	HDSL*	ent-crs-vt1:m-1-1-1d1-2, cct=locked,ring={m1,m2}
m-{1-12}-{1-7,all}-{1-4,all}	OC-12	<-->	a-1-{1-2} a-2-{1-2,all}	T1EXT	ent-crs-vt1:m-1-1-1,a-1-2, cct=locked,ring={m1,m2}
m-{1-12}-{1-7,all}-{1-4,all}	OC-12	<-->	b-1-{1-2} b-2-{1-2,all}	T1EXT	ent-crs-vt1:m-1-1-1,b-1-2, cct=locked,ring={m1,m2}
m-{1-12}-{1-7,all}-{1-4,all}	OC-12	<-->	c-1-{1-2} c-2-{1-2,all}	T1EXT	ent-crs-vt1:m-1-1-1,c-1-2, cct=locked,ring={m1,m2}
m-{1-12}-{1-7,all}-{1-4,all}	OC-12	<-->	d-1-{1-2}	T1EXT	ent-crs-vt1:m-1-1-1,a-1-2, cct=locked,ring={m1,m2}
m-{1-12}-{1-7,all}-{1-4,all}	OC-12	<-->	a-1-{1-2} a-2-{1-2,all}	HDSL*	ent-crs-vt1:m-1-1-1,a-1-2, cct=locked,ring={m1,m2}
m-{1-12}-{1-7,all}-{1-4,all}	OC-12	<-->	b-1-{1-2} b-2-{1-2,all}	HDSL*	ent-crs-vt1:m-1-1-1,b-1-2, cct=locked,ring={m1,m2}
m-{1-12}-{1-7,all}-{1-4,all}	OC-12	<-->	c-1-{1-4,all} c-2-{1-4,all}	HDSL*	ent-crs-vt1:m-1-1-1,c-1-2, cct=locked,ring={m1,m2}
m-{1-12}-{1-7}-{1-4,all}	OC-12	<-->	d-1-{1-2,all}	HDSL*	ent-crs-vt1:m-1-1-1d1-2, cct=locked,ring={m1,m2}

Notes

1. *Locked Signals:* Cross-Connect type (CCT) must be “locked” (locked).

*When using HDSL (BBF8) circuit pack in the Low Speed area, the 28G-U/28G2-U or the 29G-U OLIU must be used in the main unit slots of the FiberReach shelf and you are limited to three HDSL (BBF8) circuit packs including protection.

The following rules and restrictions apply when mixing HDSL with Quad DS1 packs:
-In 1x1, up to 2 BBF1(B) or BBF3(B), 1 for service and 1 for protect, can be mixed with up to 2 BBF8s, one for service and one for protect.
-In 1x7, if 3 HDSL (BBF8) circuit packs are used in Low Speed (either 1 for protect and 2 for service, or 0 for protect and 3 for service), no mixing is allowed.
-Up to 2 BBF8s can be mixed with up to 3 BBF1(B)/BBF3(B). No protect of either circuit pack type is allowed.
-Up to 1 BBF8 can be mixed with up to 5 BBF1(B)/BBF3(B). No protect of either circuit pack type is allowed.
-If Low Speed is equipped with 8 BBF1(B)/BBF3(B), then no BBF8 is allowed.
-No T1EXT can be mixed with HDSL.

Manual Cross-Connection Procedure

The following steps should be used to provision FiberReach systems for manual cross-connections:

a. All cross-connections entered by the user are "manual" connections and must be deleted by the user to change service.

b. All commands to change signal routings (enter or delete) may be service affecting. A warning and confirmation for the request is issued as explained in Chapter 11, "Commands and Reports," for the **`ent-crs`** and **`dlt-crs`** commands.

c. Manual routing requires that slots be equipped. The **`ent-crs`** routing command will check if the slot is equipped and display an error message denying illegal requests.

d. Manual routing requires that slots be equipped. Therefore, if the last circuit pack of a protected pair is removed from the slot even if there is no signal on the circuit pack, the action is alarmed. The "Update" command will be denied. The manual routing must be deleted before the circuit pack can be removed and the slot can become unequipped using the "Update" command.

e. The **`rtrv-crs`** command displays the cross-connect routing table.

The only restriction on manual cross-connections for FiberReach is that a cross-connection may not be made with any signal where a cross-connection already exists. The existing cross-connection must be deleted before a new cross-connection can be entered.

OC-1 Path Protected Ring Application Example

The following example is a path protected ring application with multiple NEs in a two-fiber ring. The main optical units of each FiberReach node in the ring are equipped with 26G2-U OLIU circuit packs to transport signals to the next NE as well as drop signals at the NE. The one or two host nodes are equipped with 27G-U OLIU circuit packs. Valid mapping is provided by termination and pass through cross-connections. The following paragraphs describe a ring network example configuration and describe how to create manual cross-connections to establish the ring network. Figure 8-1 shows the six nodes with dashed lines indicating the cross-connections.

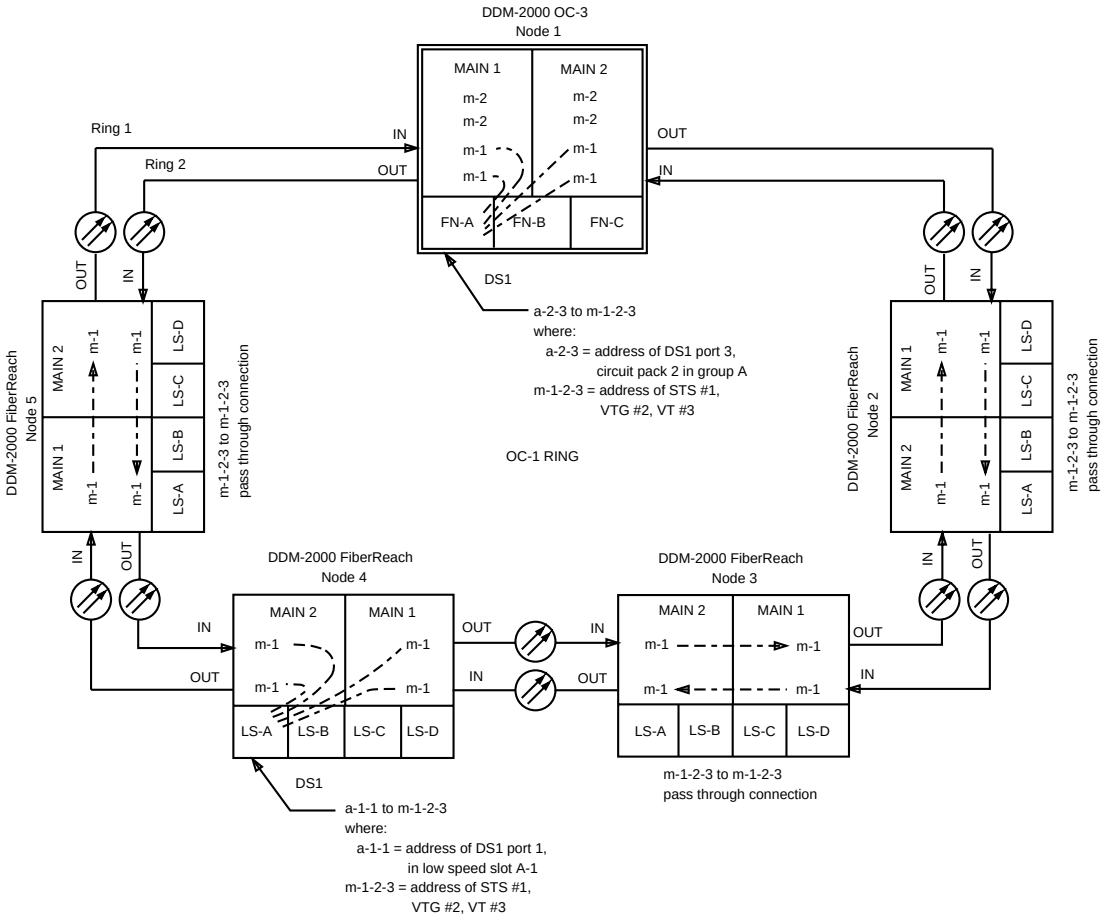

Figure 8-1. Example OC-1 Ring Configuration Cross-Connections

In Figure 8-1, the example configuration is a ring network with two ring fibers and six nodes. Ring 1 carries ring traffic in the clockwise direction while Ring 2 carries ring traffic in the counterclockwise direction. In the example configuration, Node 1 is a DDM-2000 OC-3 shelf equipped with 27-type OLIU circuit packs in the Main slots, MXRVOs in Function Unit A, and DS1 or DS1PM circuit packs in the Low-Speed Group A slots. Nodes 2 through 6 are DDM-2000 FiberReach Multiplexer shelves with 26-type OLIU circuit packs in the Main slots and DS1 or DS1PM circuit packs in the Low-Speed Group A slots. All shelves are properly installed and provisioned. This example is for DS1 services. See "System Turnup/Circuit Order" in the TOP section of this manual for actual procedures.

Ring configurations support manual VT1.5 cross-connections. Manual cross-connections must be made at **each** node in the network for each circuit being established. Drop cross-connections are made at the drop nodes where service enters or exits the node (Nodes 1 and 5) and pass through cross-connections are made at **each** intermediate node (Nodes 2, 3, and 5).

It is recommended that pass-through cross-connections be entered first, as shown below, to avoid transient alarms during provisioning.

The following commands may be used to delete, enter, and retrieve cross-connections: **`dlt-crs-vt1`**, **`ent-crs-vt1`** and **`rtrv-crs-vt1`**. See Chapter 11, "Commands and Reports," for a description of these commands.

To establish the end-to-end DS1 circuit from Node 1 to Node 5, as shown in Figure 8-1, enter a cross-connection at each node as follows:

1. Enter the following pass-through cross-connections at Nodes 2, 3, and 5:

   `ent-crs-vt1:m-1-2-3,m-1-2-3:cct=twoway;`

2. Enter the following cross-connection to drop the VT1.5 channel from the OC-1 ring to a DS1 interface at Node 1:

   `ent-crs-vt1:m-1-2-3,a-2-3:cct=twoway;`

3. Enter the following cross-connection to drop the VT1.5 channel from the OC-1 ring to a DS1 interface at Node 4, a DDM-2000 FiberReach Wideband shelf:

   `ent-crs-vt1:m-1-2-3,a-1-3:cct=twoway;`

4. Test both paths around the ring. Since DDM-2000 uses non-revertive path switching to minimize the number of hits on services, the initial path selection is arbitrary. Use **`rtrv-state-path`** and **`sw-path-vt1`** commands to test both ring paths around the ring network at the drop nodes of the new service. The **`sw-path-vt1`** command should be limited to the addresses that are being tested. For the example, the commands to be used at Node 1 and Node 4 are:

   `sw-path-vt1:m1-1-2-3` and **`sw-path-vt1:m2-1-2-3`**.

Note that this same configuration could be set up using the second OC-1 interface on the 27G-U OLIUs in the main slots of the DDM-2000 OC-3 shelf at Node 1. To do this using the same VT1.5 timeslot on the OC-1 ring, replace the VT1.5 address **`m-1-2-3`** with **`m-2-2-3`** in Step 2; all other cross-connections remain the same.

Single-Homed Path-Switched Ring Example

Figure 8-2 shows an example of an OC-1 VT1.5 single-homed path-switched ring application. The network elements on the OC-3 ring can be either DDM-2000 OC-3 Multiplexers or *SLC*-2000 Access Systems.

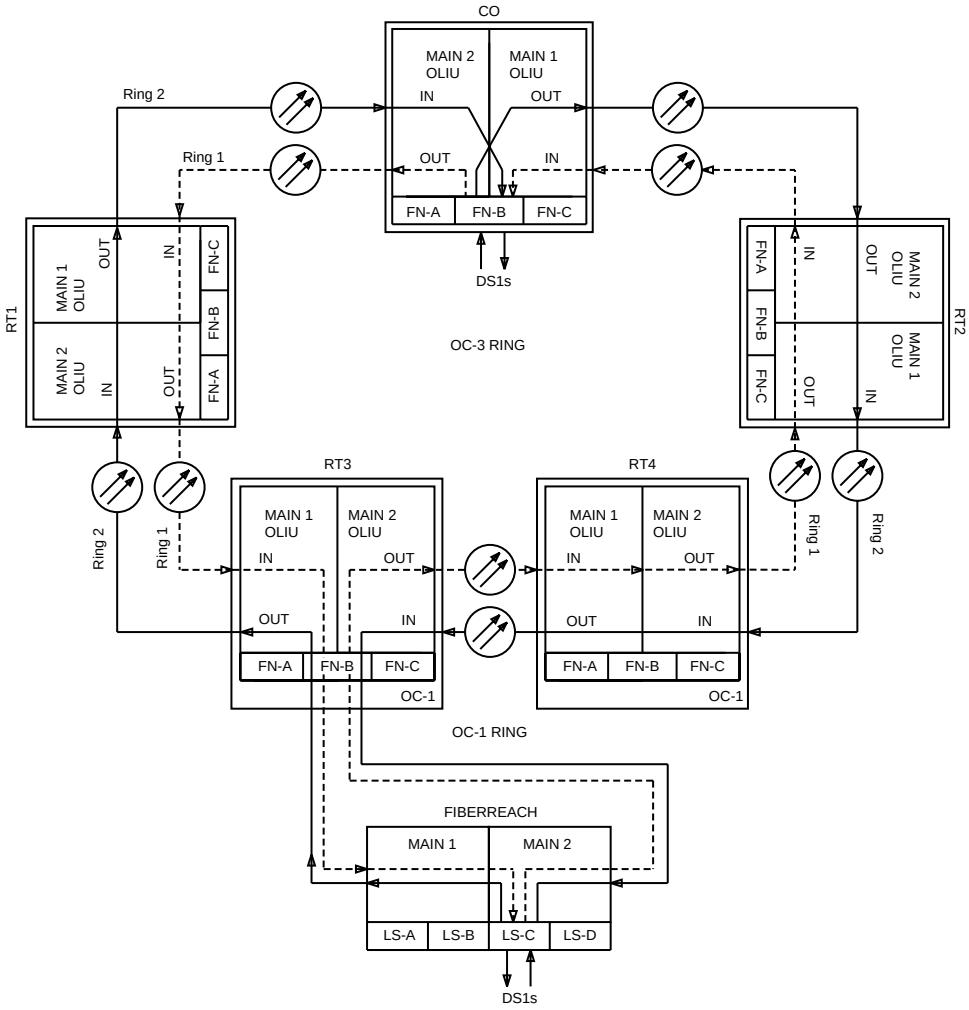

Figure 8-2. Example Single-Homed Path-Switched Ring Configuration Cross-Connections

In Figure 8-2, the DDM-2000 OC-3 shelf at RT3 supports a single-homed OC-1 interface in function unit B. Signals are connected between the OC-3 interface in Main-1 and the OC-1 interface(s) in FN-B-1, and between the OC-3 interface in Main-2 and the OC-1 interface(s) in FN-B-2. Switching is not done on the DDM-2000 OC-3 Multiplexer on these interfaces; rather VT1.5 level path switching is done on the DDM-2000 FiberReach Multiplexer and on the DDM-2000 OC-3 shelf at the CO node. This allows DDM-2000 FiberReach nodes to interface with DDM-

2000 nodes of an OC-3 ring, providing "ring-on-ring" architecture. Each OC-1 ring so supported occupies up to 28 VT1.5 time slots on the OC-3 ring. When single-homing is used, the OC-3 system passes the VT1.5 time slots between the OC-1 interfaces and OC-3 interfaces without terminating them or performing any path protection switching on them. Up to six OC-1 rings can be supported by one DDM-2000 OC-3 shelf in this way. Since the signals from the OC-1 ring(s) are sent as two copies (one clockwise, the other counterclockwise) on the OC-3 ring, the OC-3 ring capacity is limited to the OC-3 line rate (84 VT1.5 signals). So, although one DDM-2000 OC-3 shelf can support up to six OC-1 rings, the full capacity of all six OC-1 rings cannot be carried on the OC-3 ring.

The OC-1 lines between an OC-3 node and an OC-1 node behave like the OC-1 lines between the nodes on an OC-1 ring and do not perform line level protection switching. Instead, the FiberReach shelves perform the normal path protection switching functions.

Some points to note for this application are:

- Single-homing can be thought of as a "ring on ring" with many of the characteristics of a single ring.
- Pass through cross-connections may be required at the VT level on both the OC-1 and OC-3 rings.
- The OC-1 ring can be composed of up to 28 VT1.5 signals from the OC-3 ring.
- More DDM-2000 FiberReach wideband shelves could be added to the OC-1 ring. A cross-connection from the OC-1 interface to a DS1 interface would be required at one of the FiberReach wideband shelves on the OC-1 ring, and pass-through cross-connections would be required at all other FiberReach wideband shelves on the OC-1 ring.

Example Cross-Connections

To establish the end-to-end DS1 circuit from the CO to the DDM-2000 FiberReach wideband shelf as shown in Figure 8-2, enter a cross-connection at each node as follows:

- At RT1, RT2, and RT4:
  `ent-crs-vt1:m-1-2-3,m-1-2-3:cct=twoway;`

  The VT signal passes through these sites on the OC-3 ring, so two-way cross-connections with identical addresses are provisioned here.

- At RT3: **`ent-crs-vt1:m-1-2-3,b-1-5-4:cct=twoway;`**

  This single command establishes the following signal paths through the DDM-2000 OC-3 shelf at RT3:

  — from Main-1, STS-1 #1, VTG #2, VT1.5 #3
  to FN-B-1, STS-1 #1, VTG #5, VT1.5 #4

  — from FN-B-1, STS-1 #1, VTG #5, VT1.5 #4
  to Main-1, STS-1 #1, VTG #2, VT1.5 #3

  — from Main-2, STS-1 #1, VTG #2, VT1.5 #3
  to FN-B-2, STS-1 #1, VTG #5, VT1.5 #4

  — from FN-B-2, STS-1 #1, VTG #5, VT1.5 #4
  to Main-2, STS-1 #1, VTG #2, VT1.5 #3

- At the CO: **`ent-crs-vt1:m-1-2-3,b-7-4:cct=twoway;`**

  This is a "drop" from the OC-3 ring to a DS1 interface.

- At FiberReach: **`ent-crs-vt1:m-1-5-4,c-1-1:cct=twoway;`**

  This is a "drop" from the OC-1 ring to a DS1 interface.

It is recommended that the pass-through cross-connections be entered first, as shown here, to avoid transit alarms during provisioning.

Dual-Homed Path-Switched Ring Example

Dual-homing offers even more survivability than a single-homed network, as even the catastrophic failure of a host node can be protected. Figure 8-3 shows an example of a dual-homed OC-1 extension from two remote nodes on an OC-3 access ring. The network elements on the OC-3 ring can be either DDM-2000 OC-3 Multiplexers or *SLC*-2000 Access Systems.

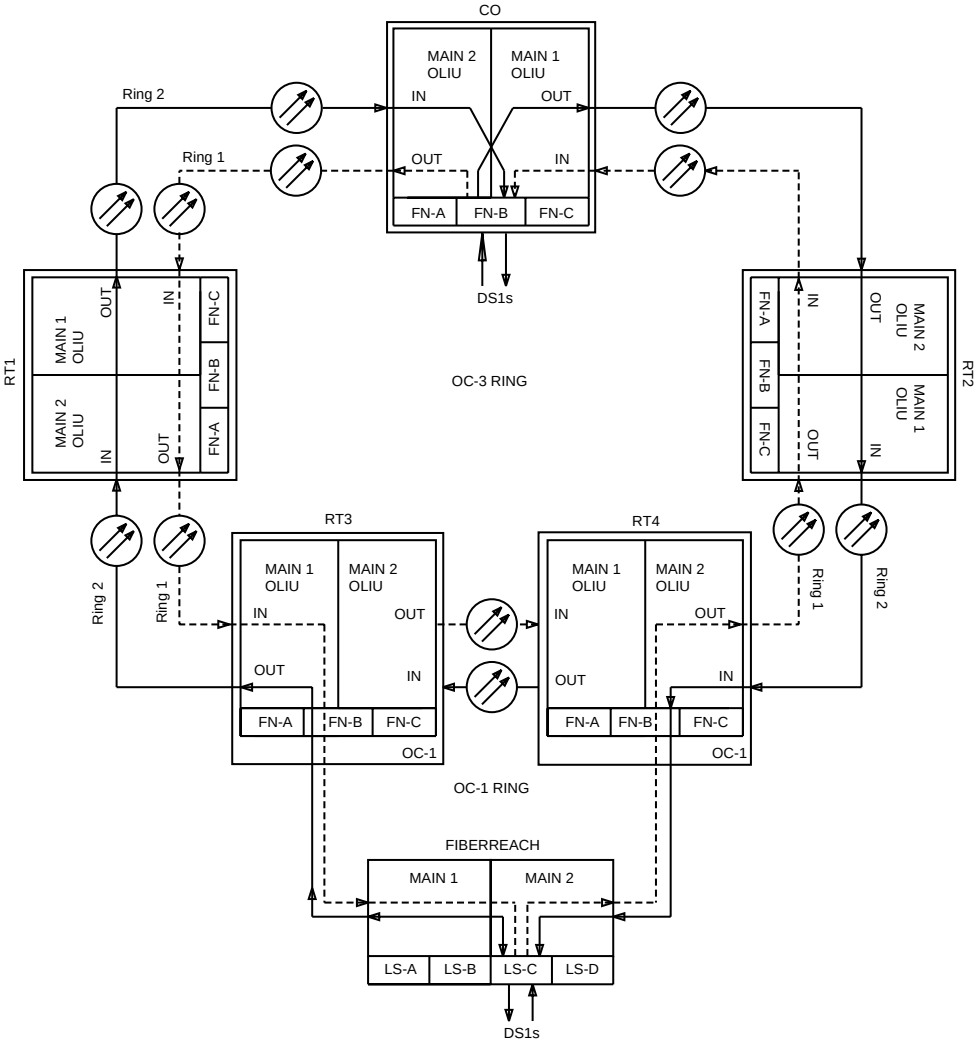

Figure 8-3. Example Dual-Homed Path-Switched Ring Configuration Cross-Connections

Path protection switching is employed for dual-homed applications, just like in single-homed applications. That is, path switching is supplied by the remote DDM-2000 FiberReach nodes and the DDM-2000 OC-3 systems in the wire center. However, the OC-3 host node configuration is different than single homing. Since an OC-3 host node terminates only one leg of the OC-1 extension, it employs a 0x1 low-speed interface to the OC-1 ring extension. The dual OC-1 circuit pack can be unprotected in a dual-homed application. Dual- and single-homed extensions can also be mixed at a host node, allowing the access network to be tailored efficiently to different groups of customers.

Example Cross-Connections

The cross-connect commands at each node in Figure 8-3 are as follows:

- At RT1 and RT2: **`ent-crs-vt1:m-1-2-3,m-1-2-3:cct=twoway;`**

  The VT signal in the ring is only passing through these sites, so two-way cross-connections with identical addresses are provisioned here.

- At RT3 and RT4: **`ent-crs-vt1:m-1-2-3,b-1-4-7:cct=twoway;`**

  At these sites, the VT1.5 signal is routed between a timeslot on the OC-3 ring and a timeslot on the OC-1 ring.

- At FiberReach: **`ent-crs-vt1:m-1-4-7,c-1-4:cct=twoway;`**

  At this site, the signal is routed from a DS1 interface to the same timeslot on both rotations of the OC-1 ring. In the other direction, the VT1.5 signals received from both rotations of the OC-1 ring are monitored, path protection switching is provided, and the selected signal is routed to the DS1 interface.

- At CO: **`ent-crs-vt1:m-1-2-3,b-1-1:cct=twoway;`**

  At this site, the signal is routed from a DS1 interface to the same timeslot on both rotations of the OC-3 ring. In the other direction, the VT1.5 signals received from both rotations of the OC-3 ring are monitored, path protection switching is provided, and the selected signal is routed to the DS1 interface.

OC-1 Ring Pass-Through Example

In Figure 8-4, the OC-3 Node Host is equipped with a 22-type OLIU in the Main OLIU circuit packs in Function Units B1 and B2. Both FiberReach nodes are equipped with 26G2-U OLIUs in Main and DS1 or DS1PM circuit packs in the low speed slots.

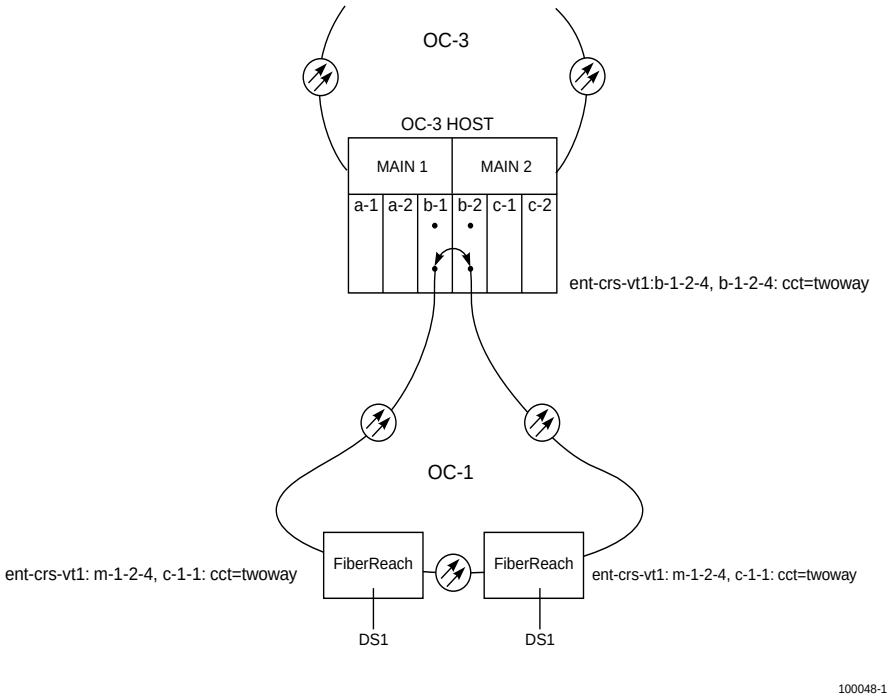

Figure 8-4. Example of OC-1 Ring Pass-Through Using Function Unit Slots of the OC-3 Shelf

Example Cross-Connections

For example, to establish the end-to-end DS1 circuit that is passed through the OC-3 subsystem Host without using bandwidth on the OC-3 ring, the following cross-connects need to be established:

- At the node Host, enter the following cross-connection:
  `ent-crs-vt1:b-1-2-4,b-1-2-4:cct=twoway;`

  The VT signal passes through from a FiberReach node to another FiberReach node on the OC-1 ring without using bandwidth on the OC-1 Host node.

- At the FiberReach nodes, enter the following cross-connection:
  `ent-crs-vt1:m-1-2-4,c-1-1:cct=twoway;`

  NOTE:
  This is a drop from the OC-1 ring to a DS1 interface.

OC-1 Ring Hairpin Routing, Single-Homed Example

In Figure 8-5, Node Host is a DDM-2000 OC-3 shelf equipped with 27-type OLIU circuit packs in Function Unit A slots, and 22-type OLIU circuit packs in the Main slots. Node RT-B is a DDM-2000 FiberReach Multiplexer with 26G2-type OLIU circuit packs in Main and DS1 or DS1PM circuit packs in the Low-Speed Group A slots, and it is included in the inner OC-1 ring.

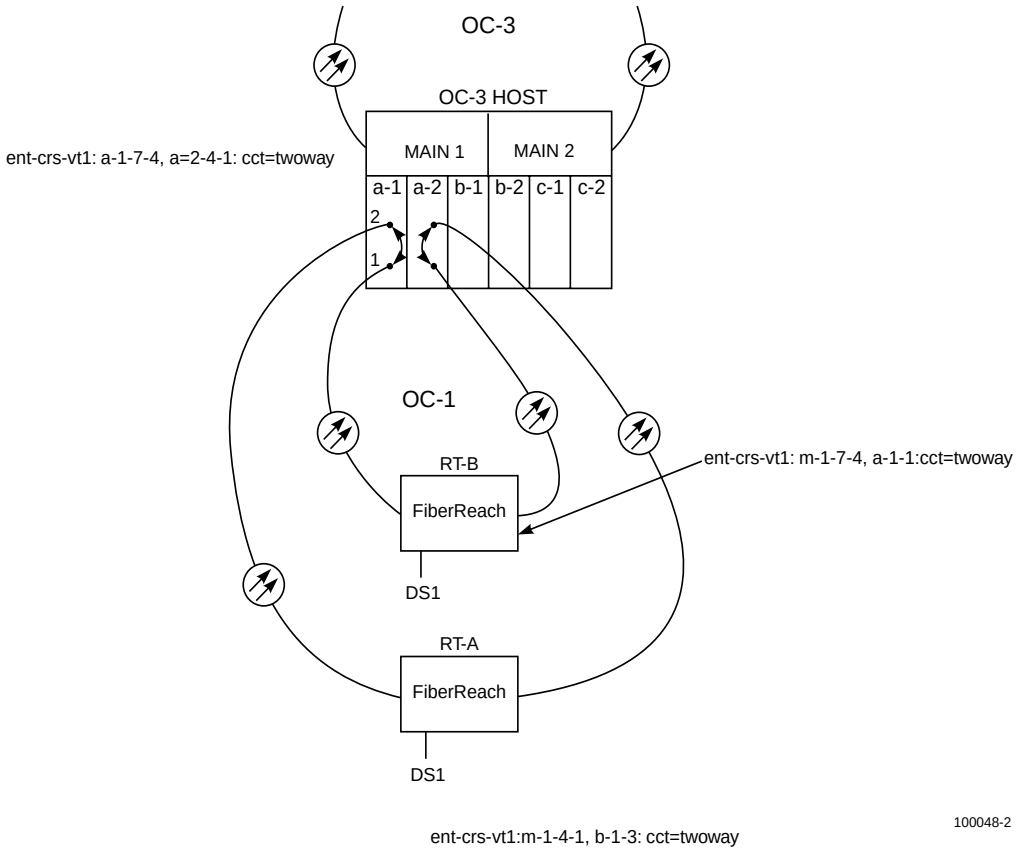

Figure 8-5. Example of an OC-1 Ring Hairpin Routing, Single-Homed Configuration

Node RT-A is a DDM-2000 FiberReach Multiplexer with 26G2-type OLIU circuit packs in Main and DS1 or DS1PM circuit packs in the Low-Speed Group B slots, and it is included in the outer OC-1 ring.

Both rotations of each of the two OC-1 rings terminate on a pair of 27G2-U OLIUs placed in the Function Unit A. More specifically, the inner OC-1 ring terminates on the OC-1 #1 ports of the 27G2-U OLIUs, and the outer OC-1 ring terminates on the OC-1 #2 ports of the 27G2-U OLIUs.

Example Cross-Connections

In order to cross-connect each rotation of one ring to the corresponding rotation of the other ring, Single-Homed OC-1 Ring Hairpin Routing would consist of the following cross-connections.

To establish the end-to-end DS1 circuit between Node RT-B and RT-A through the Host as shown in Figure 8-5, enter a cross-connection at each node as follows:

- At Node Host, enter the following cross-connection:
  `ent-crs-vt1:a-1-7-4,a-2-4-1:cct=twoway;`

  This single command establishes the following signal paths through the Function Unit A of the OC-3 shelf:

  — from FN-A-1, STS-1 #1, VTG #7, VT1.5 #4 to FN-A-1, STS-1 #2, VTG #4, VT1.5 #1

  — from FN-A-1, STS-1 #2, VTG #4, VT1.5 #1 to FN-A-1, STS-1 #1, VTG #7, VT1.5 #4

  — from FN-A-2, STS-1 #1, VTG #7, VT1.5 #4 to FN-A-2, STS-1 #2, VTG #4, VT1.5 #1

  — from FN-A-2, STS-1 #2, VTG #4, VT1.5 #1 to FN-A-2, STS-1 #1, VTG #7, VT1.5 #4

- At Node RT-B, enter the following cross-connect:
  `ent-crs-vt1:m-1-7-4,a-1-1:cct=twoway;`

- At Node RT-A, enter the following cross-connect:
  `ent-crs-vt1:m-1-4-1,b-1-3:cct=twoway;`

OC-1 Ring Hairpin Routing, Dual-Homed Example

In Figure 8-6, Node X is a DDM-2000 OC-3 shelf equipped with a 27-type OLIU circuit pack in Function Unit A slot 1, and 22-type OLIU circuit packs in the Main slots. Node Y is also a DDM-2000 OC-3 shelf equipped with a 27-type OLIU circuit pack in Function Unit A slot 2 and Function Unit C slot 2.

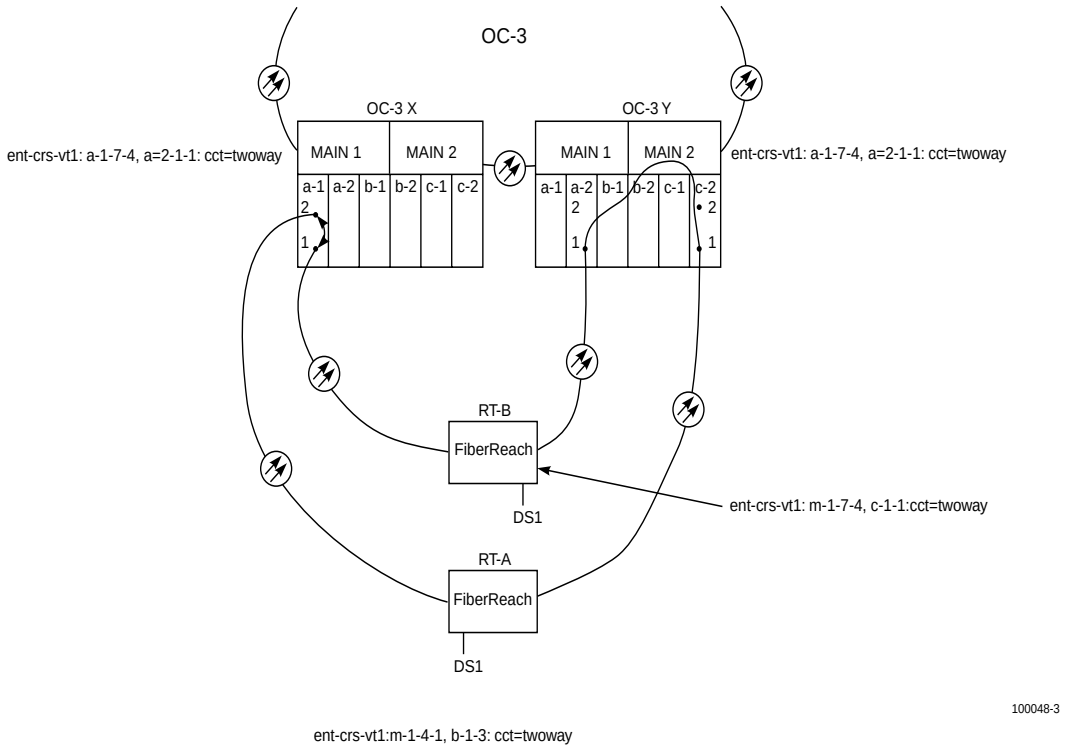

Figure 8-6. Example of OC-1 Ring Hairpin Routing, Dual-Homed Configuration

Node RT-B is a DDM-2000 FiberReach Multiplexer with 26G2-type OLIU circuit packs in Main and DS1 or DS1PM circuit packs in the Low-Speed Group C slots, and it is included in the inner OC-1 ring.

Node RT-A is a DDM-2000 FiberReach Multiplexer with 26-type OLIU circuit packs in Main and DS1 or DS1PM circuit packs in the Low-Speed Group A slots, and it is included in the outer OC-1 ring.

In this Dual Homed configuration, only one rotation of each of the two OC-1 rings terminates on a single OC-3 shelf. More specifically, one rotation of the inner OC-1 ring terminates on the OC-1 #1 port of the 27G2-U OLIU placed in Function Unit A-1 of OC-3 Node X, and the corresponding rotation of the outer OC-1 ring terminates on the OC-1 #2 port of the 27G2-U OLIU placed in Function Unit A-1 of OC-3 Node X as well.

The other rotation of the inner OC-1 ring terminates on the OC-1 #1 port of the 27G2-U OLIU placed in Function Unit A-2 of OC-3 Node Y, and the corresponding rotation of the outer OC-1 ring terminates on the OC-1 #1 port of the 27G2-U OLIU placed in Function Unit C-2 of the OC-3 Node Y as well.

Example Cross-Connections

In order to cross-connect each rotation of one ring to the corresponding rotation of the other ring as illustrated in Figure 8-6, Dual-Homed OC-1 Ring Hairpin Routing would consist of the following items.

To establish the end-to-end DS1 circuit between Node RT-B and RT-A through Node X and Node Y as shown in Figure 8-6, enter a cross-connection at each node as follows:

- At Node X, enter the following cross-connection:
  `ent-crs-vt1:a-1-7-4,a-2-1-1:cct=twoway;`

  This single command establishes the following signal paths through the Function Unit A of the OC-3 shelf:

  — from FN-A-1, STS-1 #1, VTG #7, VT1.5 #4
  to FN-A-1, STS-1 #2, VTG #1, VT1.5 #1

  — from FN-A-1, STS-1 #2, VTG #1, VT1.5 #1
  to FN-A-1, STS-1 #1, VTG #7, VT1.5 #4

  — from FN-A-2, STS-1 #1, VTG #7, VT1.5 #4
  to FN-A-2, STS-1 #2, VTG #1, VT1.5 #1

  — from FN-A-2, STS-1 #2, VTG #1, VT1.5 #1
  to FN-A-2, STS-1 #1, VTG #7, VT1.5 #4

- At Node Y, enter the following cross-connection:
  `ent-crs-vt1:a-1-7-4,c-1-1-1:cct=twoway;`

  This single command establishes the following signal paths through the Function Unit A of the OC-3 shelf and Function Unit C:

  — from FN-A-2, STS-1 #1, VTG #7, VT1.5 #4
  to FN-C-2, STS-1 #1, VTG #1, VT1.5 #1

  — from FN-C-2, STS-1 #1, VTG #1, VT1.5 #1
  to FN-A-2, STS-1 #1, VTG #7, VT1.5 #4

- At Node RT-B, enter the following cross-connect:
  `ent-crs-vt1:m-1-7-4,c-1-1:cct=twoway;`
- At Node RT-A, enter the following cross-connect:
  `ent-crs-vt1:m-1-1-1,a-1-1:cct=twoway;`

Hairpin Local Drop Routing Example

In Figure 8-7, Node Host is a DDM-2000 OC-3 shelf equipped with 27-type OLIU circuit packs in Function Unit A slots, 22-type OLIU circuit packs in the Main slots, and MXRVO circuit packs in Function Unit C along with the DS1 or DS1PM circuit packs in the corresponding Low Speed slots group C. This OC-3 shelf is part of an OC-3 ring.

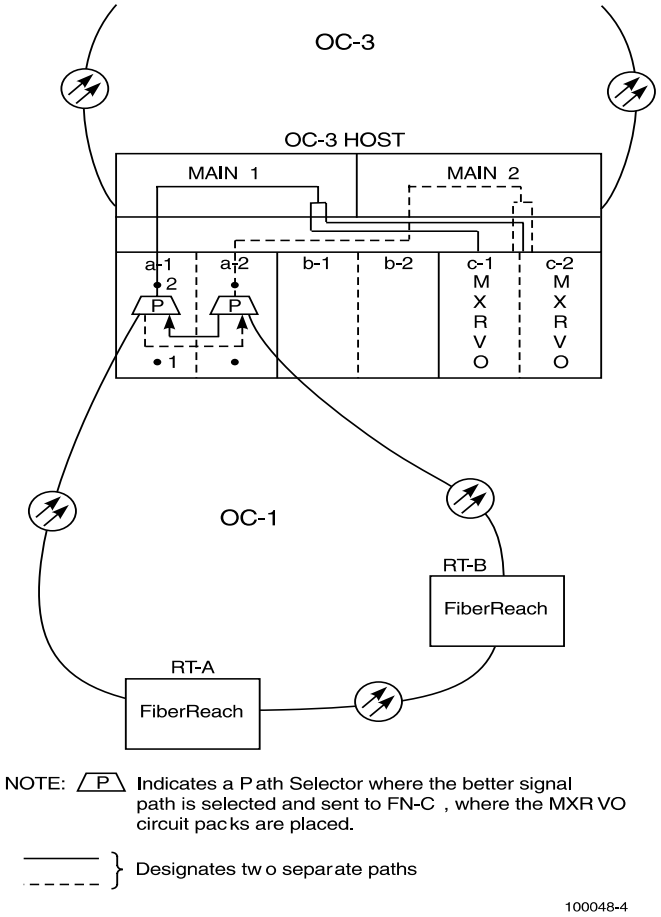

Figure 8-7. Example of Hairpin Local Drop Routing Configuration

The OC-1 ring hosted by the OC-3 shelf contains two FiberReach nodes; RT-B and RT-A. Both DDM-2000 FiberReach Multiplexers are equipped with 26-type OLIU circuit packs in Main and DS1 or DS1PM circuit packs in

the Low-Speed slots. Both rotations of the OC-1 ring terminate on a pair of 27G2-U OLIUs placed in Function Unit A of the OC-3 (HOST) node. More specifically, the OC-1 ring terminates on the OC-1 # 2 ports of the 27G2-U OLIUs.

By establishing VT1.5 Hairpin local drop cross-connects between FN-A and FN-C of the OC-3 Host node, the user is allowing traffic to be routed from the FiberReach RT-A node in the OC-1 ring to a local drop on the OC-3 Host node without using bandwidth on the OC-3 ring.

Example Cross-Connections

To establish the end-to-end DS1 circuit between Node HOST and RT-A as shown in Figure 8-7, enter a cross-connection at each node as follows:

- At Node HOST, enter the following cross-connection:
  `ent-crs-vt1:a-1-2-4,c-2-4:cct=twoway;`

  This single command establishes the following signal paths through the OC-3 shelf:

  — from FN-A-1, STS-1 #1, VTG #2, VT1.5 #4 to FN-C, VTG #2, VT1.5 #4

  — from FN-A-2, STS-1 #1, VTG #2, VT1.5 #4 to FN-C, VTG #2, VT1.5 #4

- At Node RT-B, enter the following cross-connection:
  `ent-crs-vt1:m-1-2-4,m-1-2-4:cct=twoway;`

  It is recommended that the user enters the pass-through cross-connects first.

- At Node RT-A, enter the following cross-connection:
  `ent-crs-vt1:m-1-2-4,a-1-1:cct=twoway;`

Cross-Connects for Release 3.1 and Later

There are three new types of cross-connections for Release 3.1 The cross-connect types are as follows:

- Basic DS3 cross-connect
- DS3 locked cross-connect
- STS3c cross-connect.

Basic DS3 Cross-Connects

Beginning with Release 3.1, the Function Unit of the FiberReach Shelf will support the DS3 (BBG4B/BBG4B) circuit pack. This provides the ability of transporting STS-1 services, using the DS3 circuit packs in the Function Unit slots. The cross-connects are done at the STS-1 rate and they are the traditional two-way DS3 cross-connects.

•

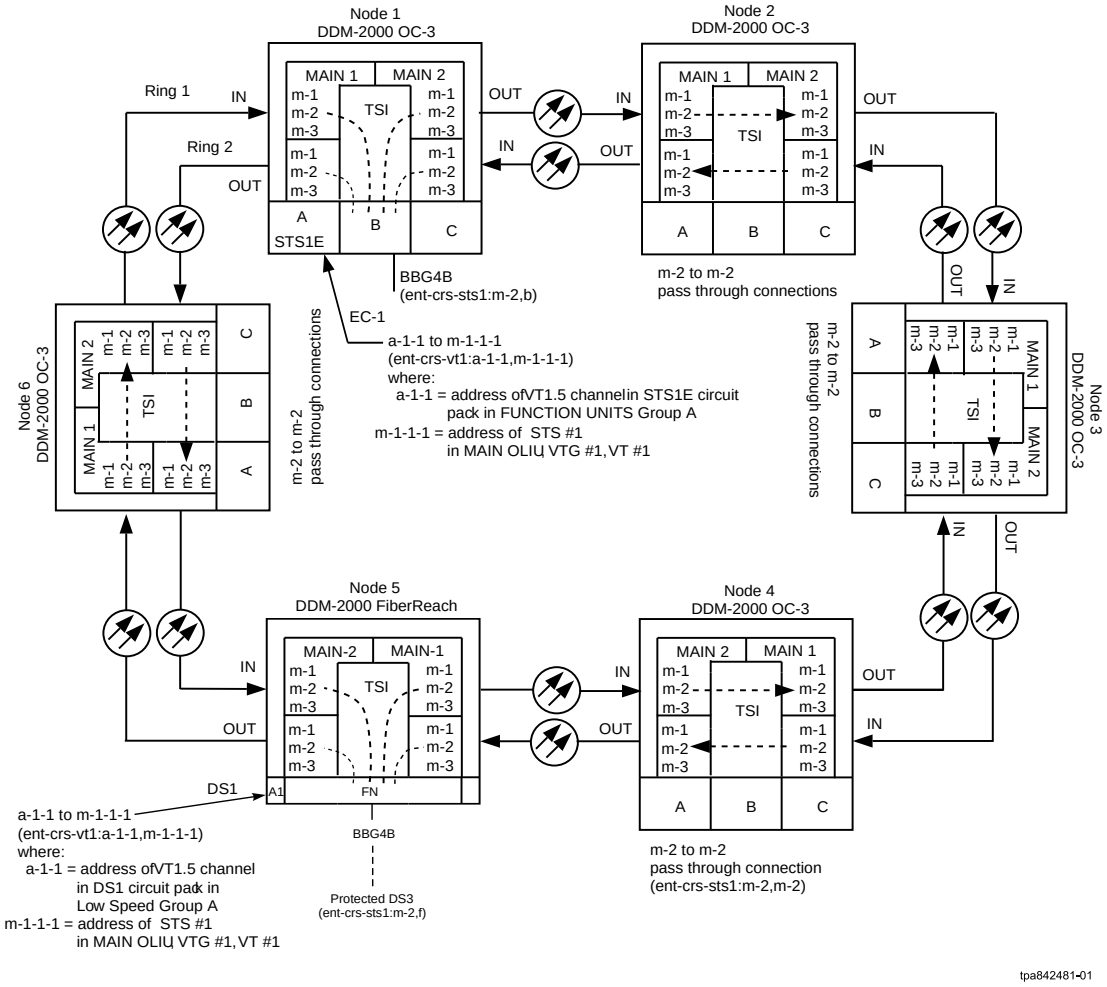

Figure 8-8. Protected DS3 Services

Example Cross-Connections

The cross-connect commands at each node are shown in Figure 8-8.

DS3 Locked Cross-Connects

Beginning with Release 3.1, the Function Unit of the FiberReach Shelf will support the DS3 (BBG19) circuit pack.

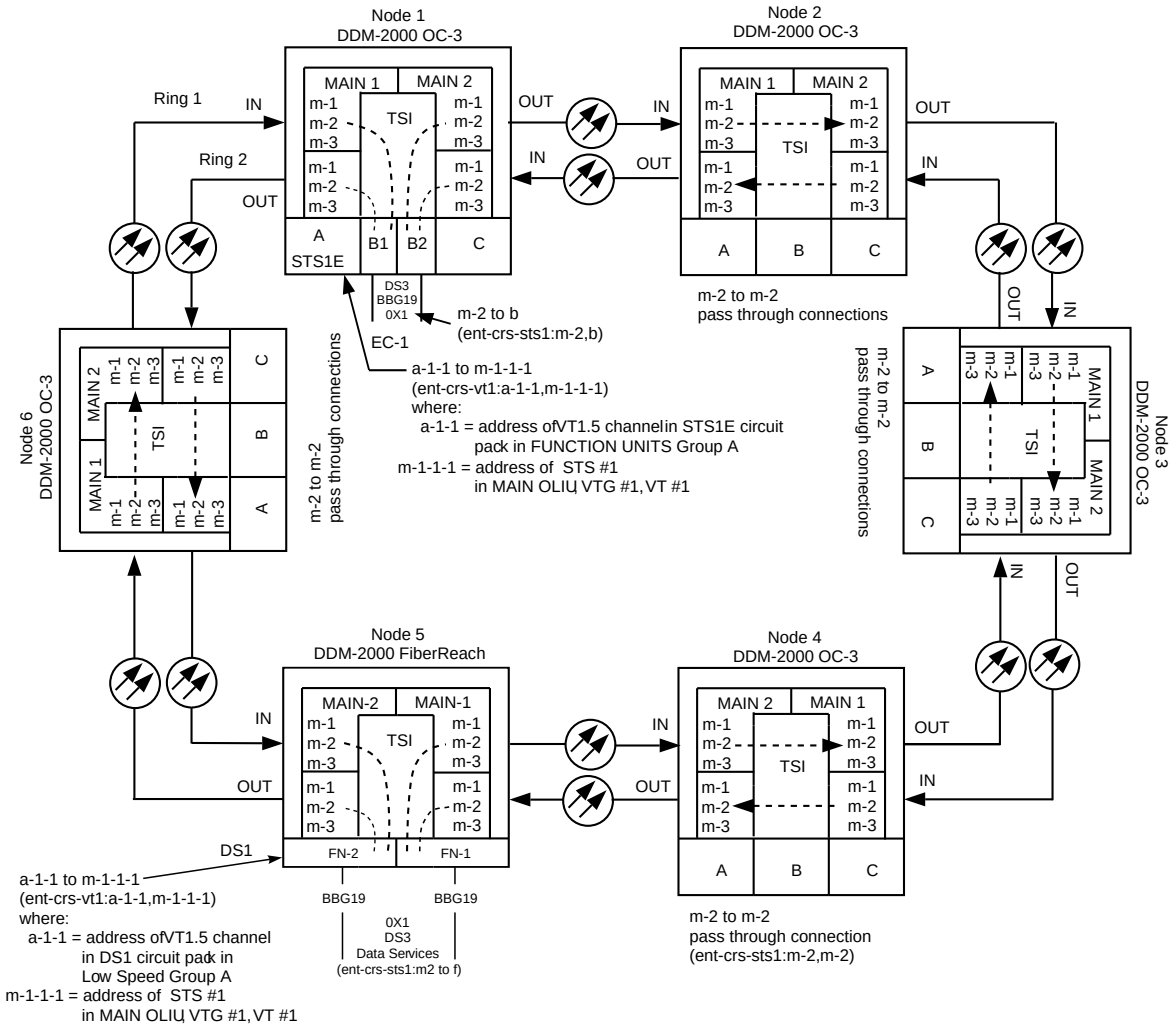

Figure 8-9. Unprotected (Locked) DS3 Data Services

Example Cross-Connections

The cross-connect commands at each node are shown in Figure 8-9.

STS-3c Cross-Connects

The 0x1 OC-3c optical interface provides the ability of transporting STS-3c services on OC-3c low-speed function units optical interfaces that have been provisioned for 0X1 applications. The internal system's application default value for OC-3 OLIU (22-type) in the function unit is "0x1". The CIT `ent-crs-sts3c` command is used with a two-way cross-connect type option.

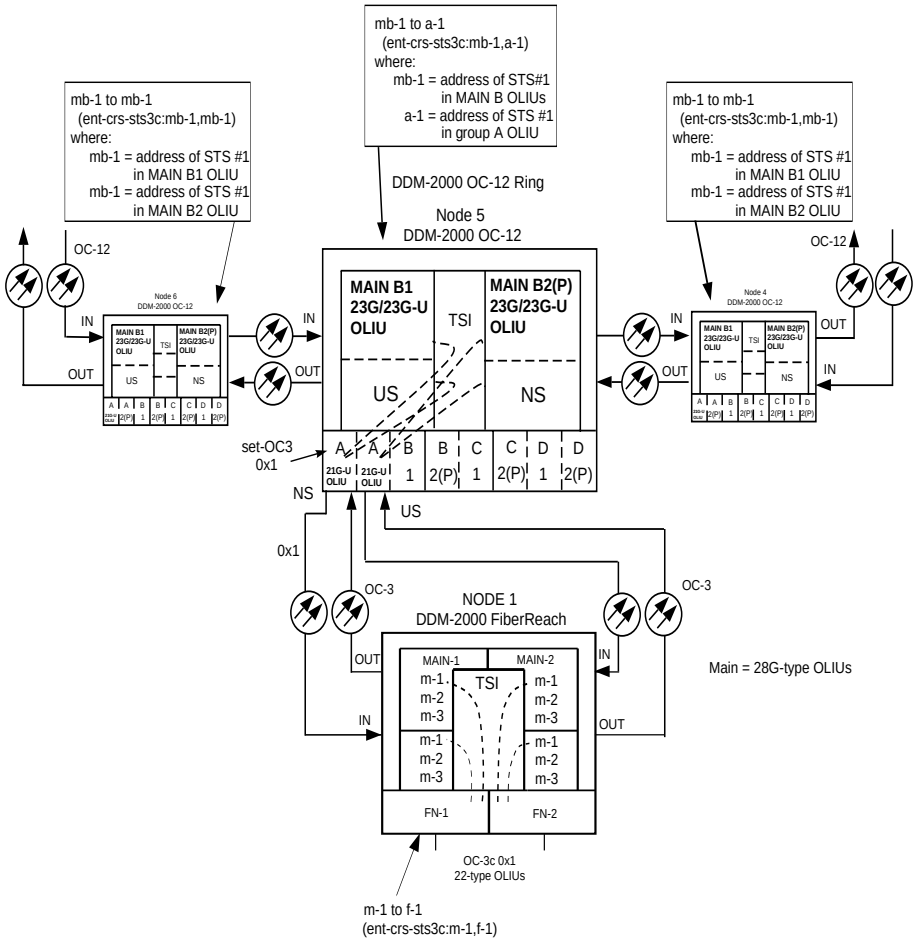

Figure 8-10. STS-3c Cross-Connects

Example Cross-Connections

The cross-connect commands at each node are shown in Figure 8-10.

Locked STS-3c (0x1) Broadband Services

Beginning with Release 3.1, a FiberReach with Main slots equipped with 28-type OC-3 OLIUs will transport STS-3c 0x1 service through 22-type OLIU OC-3 interfaces in its function group.

Beginning with Release 4.0, a FiberReach with Main slots equipped with 29-type OC-12 OLIUs will transport STS-3c 0x1 service through 22-type OLIU OC-3 interfaces in its function group.

STS-3c path switching does not take place on the DDM-2000 ring; it is executed elsewhere in the network (e.g., when the ring transports ATM STS-3c traffic path switching is performed through the external ATM-based router).

Figure 8-11 shows an STS-3c 0x1 application. Each OC-12 node provisions the same dropped STS-3c time slot as other nodes on the same ring. For different applications, an OC-12 node can assign the other STS-3cs to different time slots at different sites. With 0x1 applications the OC-12 ring passes the contents of these STS-3c time slots between the low-speed OC-3/IS-3 lines and the OC-12 high-speed lines without terminating them or performing path protection switching.

Since the STS-3c traffic is received by the low-speed interfaces and transmitted as two copies on the OC-12 ring (one clockwise, one counterclockwise), the ring capacity is limited to the OC-12 line rate.

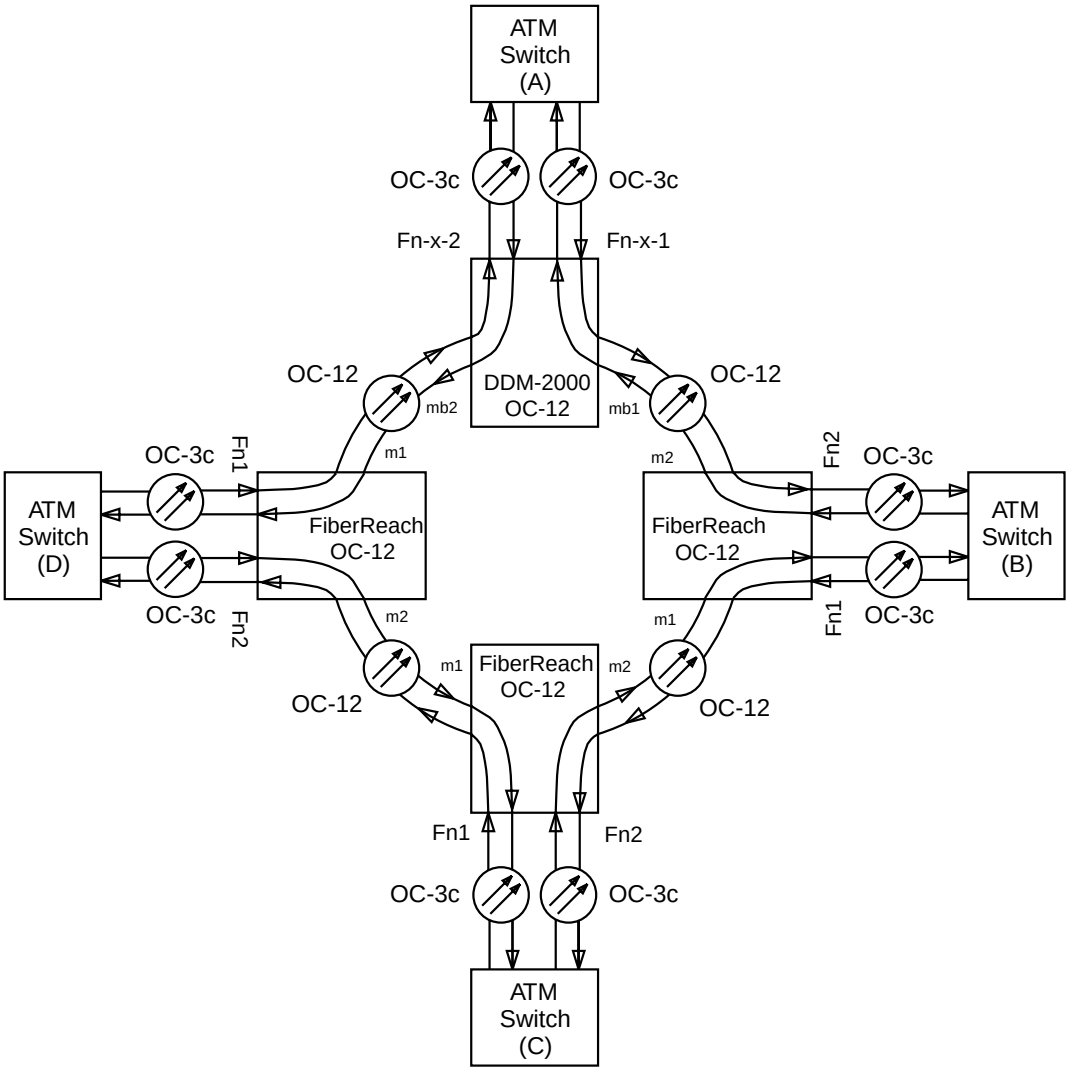

Figure 8-11. Locked (0x1) STS-3c - Broadband Services Using DDM-2000 OC-12 Multiplexer and FiberReach Equipped with 29G-Type OLIUs

Narrowband Administration and Provisioning

Narrowband Shelf Administration

Software Downloads and Upgrades

Software is downloaded into the narrowband shelf DSXBIU from the *SLC*-2000 Host via the ESF datalink of the DS1 signals that carry the narrowband services. Upgrades to the software are distributed on *MS-DOS* formatted diskettes that contain the new software and an installation program for installing the software. These software upgrades are the mechanism to upgrade from one system software release to the next. All software upgrades maintain the provisionable parameters of the previous software generic. (For example, cross-connections are left unchanged by the software upgrade.)

The **`ins-prog`** command supports software installation from a personal computer and the **`cpy-prog`** command supports software installation from one FiberReach shelf to another FiberReach shelf.

Software can be downloaded locally or remotely from an *MS-DOS* PC using the CIT port on a *SLC*-2000 Access System or DDM-2000 Multiplexer. The software is first loaded into the *SLC*-2000 host which, in turn, downloads to the narrowband DSXBIU circuit pack. After the DSXBIU software is installed, the DSXBIU resets and all MSDT calls are dropped.

Security

The narrowband shelf OAM&P functions are provided by the *SLC*-2000 host, which are supported through several interfaces including the user interface panel, the CIT, and the TL1 interface to operations systems. In addition to these interfaces, remote access is available via the SONET DCC to provide control to the DDM-2000 OC-3 Multiplexer network, and an embedded operations channel (EOC) interface is available to provide control to the local digital switch for TR303 functions.

The *SLC*-2000 Access System offers security against unauthorized access via its CIT port or through a remote operations port. The use of security is provisionable via the front CIT port, the rear CIT (modem) port, and through the SONET DCC. Three user levels are supported:

- Privileged Users: These users have full read/write access to all information on the system, including passwords.

- Standard Users: These users have read/write access to system provisioning and maintenance information.
- Reports-Only Users: These users have read access to system information but no ability to change provisioning or maintenance parameters.

Each user has an individual login and password, and each user selects and maintains his/her own password.

The TL1 interfaces to operations systems provide a security option feature which allows the administrator to control access by general users (for provisioning and retrieval) and retrieve-only users.

When the system is first initialized, three default logins and passwords are provided which must be changed by a privileged user before security is enabled. At initialization, privileged users are those users who use the default logins and passwords. Replacement of the SYSCTL circuit pack causes the system to default back to the default logins and passwords. Up to 100 logins and passwords can be added, deleted, and changed by three authorized privileged users. Login and password security can be enabled or disabled. Timeouts can be provisioned independently for the CIT interface and the synchronous optical network (SONET) section DCC. For more information on provisioning, see System Turnup/Circuit Order in the TOP section of this manual.

Authorized privileged users can establish general user and reports-only user logins using the **`set-lgn`** command.

The following commands are restricted to privileged users over the CIT and DCC interfaces. See 824-102-148, *2000 Family of Products Operations Systems Engineering Guide* for TL1/X.25 command access privileges.

- **`init-sys`**—Initialize System
- **`rstr-passwd`**—Restore login and password file
- **`rtrv-lgn`**—Retrieve Login
- **`rtrv-passwd`**—Retrieve login and password file
- **`set-feat`**—Set Features
- **`set-fecom`**—Set Far-End Communications
- **`set-lgn`**—Set Login
- **`set-secu`**—Set Security.

When security is enabled, the following commands become restricted to privileged users only:

- **`cpy-prog`**—Copy Program
- **`ent-tl1msgmap`**—Enter TL1 Message Map

- **ent-ulsdccl3/l4**—Enter Upper Layer Section DCC
- **init-pm**—Initialize Performance Monitoring
- **ins-prog**—Install Program
- **reset**—System Reset
- **set-date**—Set network element (NE) Date and time
- **set-ne**—Set NE name.

Reports-only users can execute the following commands:**?** (help), **logout**, **rlgn**, **set-passwd** (their own), **toggle**, and all **rtrv** commands except, **rtrv-lgn**, and **rtrv-passwd**.

For details on these and other commands, see Chapter 11, "Commands and Reports."

Narrowband Shelf Provisioning

NOTE:
The narrowband shelf's common equipment and channel units are not protected.

Channel Unit Provisioning

The FiberReach narrowband shelf consists of upper and lower subshelves for channel units. Each subshelf can contain up to six channel units each, for a total of 12 channel units per narrowband shelf. Each channel unit in the Narrowband Shelf requires the following DS0 timeslots depending on the type of service provided by the channel units.

- POTS or Special Services: up to 4 DS0 time slots per channel unit
- ISDN services:(2B&D): up to 9 DS0 time slots per channel unit.

Refer to LTP 363-208-001, *SLC®-2000 Access System User/Service Manual*, for additional details on channel unit provisioning.

DDM-2000 FiberReach Narrowband Shelf ONU (Release 4.4 and Later)

Using the CIT, you can provision each DSX-1 signal feeding a *V-DT* in the NBS to any one of the following two modes:

- ***Quad Mode*:** In this state, the DSXBIU continuously attempts to find or frame-up on the DSX-1 input, establish the message link, alarm any DSX-1 faults, and provide service to a set of six channel unit slots in the NBS. This mode is similar to the service provided with Release 4.3 where a single server can feed a six-slot V-DT for 24-line service. You can also provision the quad mode for 12-line service.
- ***Octet Mode*:** In this state, the DSXBIU continuously attempts to find or frame-up on the DSX-1 input, establish the message link, alarm any DSX-1 faults, and provide service to a set of three channel unit slots in the NBS. In the octet mode, each channel unit slot can support eight DS0s instead of the four DS0s supported in the quad mode. The octet mode allows the use of the maximum number of ten ISDN lines in the NBS when using the *SPQ*494 quad ISDN channel units along with the AUA94 dual ISDN channel units. You can provision the octet mode for 24-line service only.

NOTE:
See Chapter 2 in the *SLC-2000 Access System Applications, Planning and Ordering Guide* for a description of V-DT.

Figure 8-12 shows a basic configuration with the *SLC*-2000 HDT hosting an NBS in the octet mode.

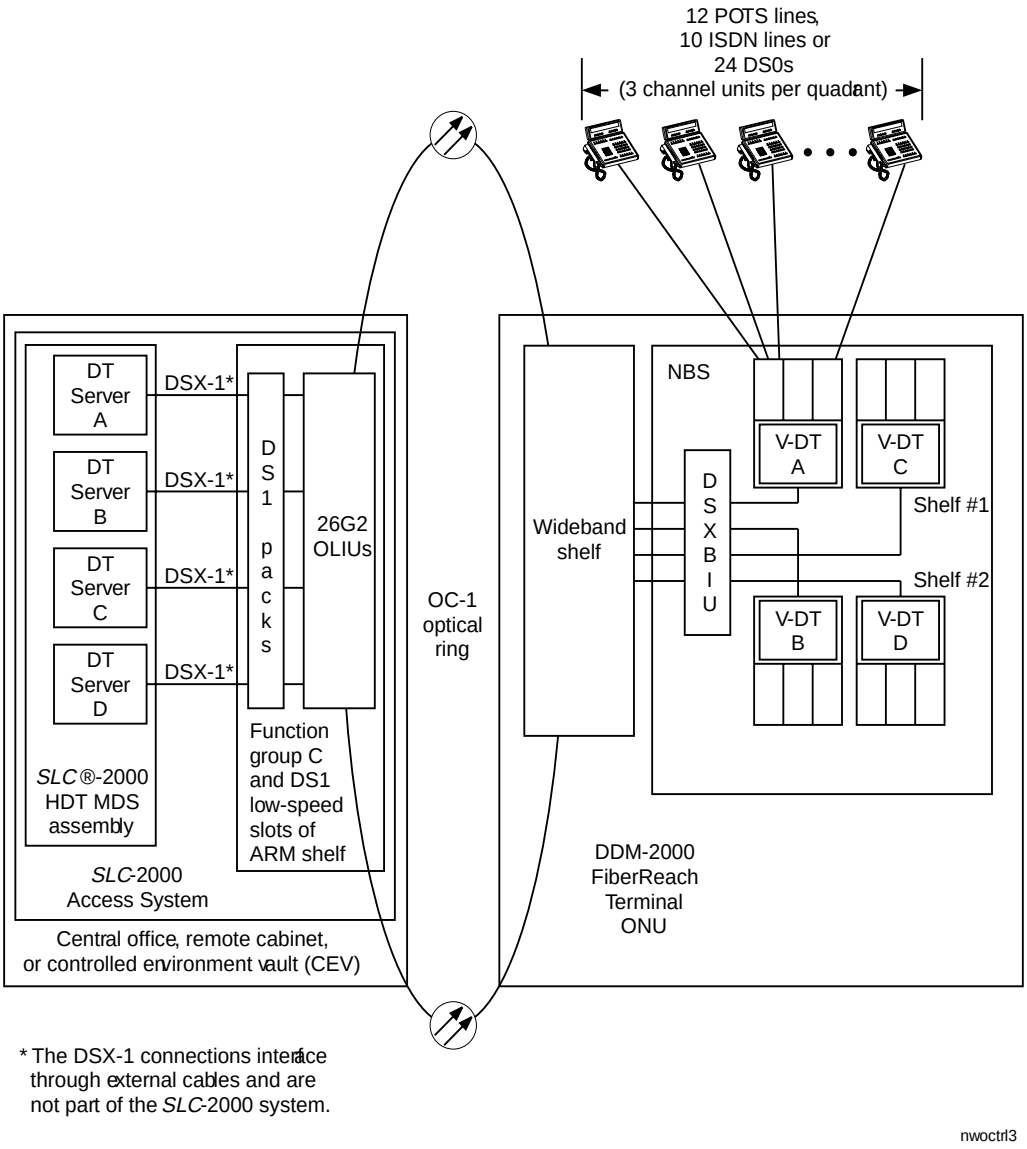

Figure 8-12. Basic Octet Mode Configuration

When in the octet mode, each of the four three-slot V-DTs can contain *SPQ*494 quad ISDN channel units in the first two slots. The third slot can contain an AUA94 dual ISDN channel. This will allow the V-DT to support a total of ten ISDN lines with each line offering 2B+D service. The third slot can also contain any of the other channel units available for the NBS. This allows the V-DT to offer a combination of services, depending on the channel units installed. Therefore, an NBS with all quadrants in octet mode can provide 40 ISDN lines.

To provide ISDN 2B+D service in the octet mode, you must manually provision the cross-connections using the SLC-2000 HDT CIT. Figure 8-13 shows the following process of how the V-DT uses the 24 time slots of its DSX-1 feeder signal to support two *SPQ*494 quad IDSN channel units and an AUA94 dual ISDN channel unit. This combination can produce ten ISDN lines providing 2B+D service:

NOTE:
The time slot representation shown in Figure 8-13 is used to explain the concept of how the system uses the 24 time slots of a DSX-1 signal to build the 2B+D ISDN lines. The actual time slots are assigned by the system and vary according to system requirements. However, the concept for building the 2B+D ISDN lines is the same as described below.

- The ISDN lines providing 2B+D service are *built* as follows:
  - A “B” data channel equates to a 64-kb/s DS0 signal that can be used for voice connections or equipment connections such as a computer. As shown in Figure 8-13, each “B” channel uses 1 time slot of the 24 time slots in the DSX-1 signal (therefore, “2B” uses 2 time slots). In Figure 8-13, the first ISDN line uses time slots 1 and 2 for its “B” channels.
  - A “D” signaling channel equates to a 16-kbs signal that is used to carry signaling and overhead data. As shown in Figure 8-13, each “D” channel uses one-fourth of a time slot. In Figure 8-13, the first ISDN line uses one-fourth of time slot 22 for its “D” channel.
  - Added together, each 2B+D ISDN line takes 2 ¼ time slots of the 24 time slots in the DSX-1 feeder signal.
- As shown in Figure 8-13, each *SPQ*494 quad ISDN channel unit provides four 2B+D ISDN lines. These four lines use a total of 9 time slots of the 24 time slots in the DSX-1 feeder signal (8 time slots for the 8 “B” channels and 1 time slot for the 4 “D” channels). This allows the V-DT to contain two *SPQ*494 channel units using 18 time slots.
- As shown in Figure 8-13, the V-DT can also contain an AUA94 dual ISDN channel unit. This unit provides two 2B+D ISDN lines using a total of 4 ½ time slots (four time slots for the four “B” channels and one-half time slot for the two “D” channels).

- Therefore, a V-DT provisioned for the octet mode can provide ten ISDN lines with each line offering 2B+D service. These ten lines use a total of 22½ of the 24 time slots provided by the DSX-1 feeder.

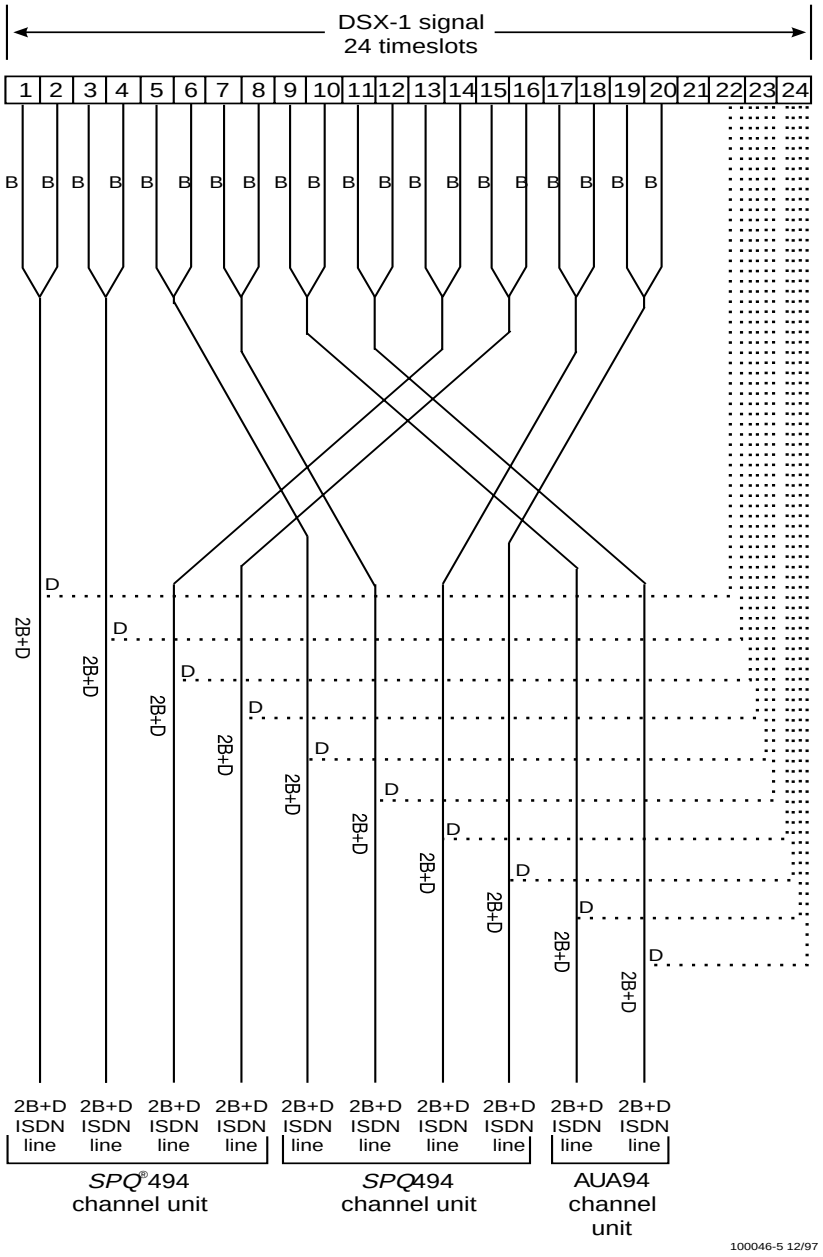

Figure 8-13. Building an ISDN 2B+D Line from a DSX-1 Signal in the NBS (Octet Mode)

For these time slots to be correctly associated with the actual channel unit slots in the MDS assembly, the system uses a *virtual channel unit slot* concept. You must use the SLC-2000 host digital terminal CIT to cross-connect the real and virtual time slots to the appropriate VRTs. Figure 8-14 shows the actual NBS configuration with its four DSX-1 feeder signals.

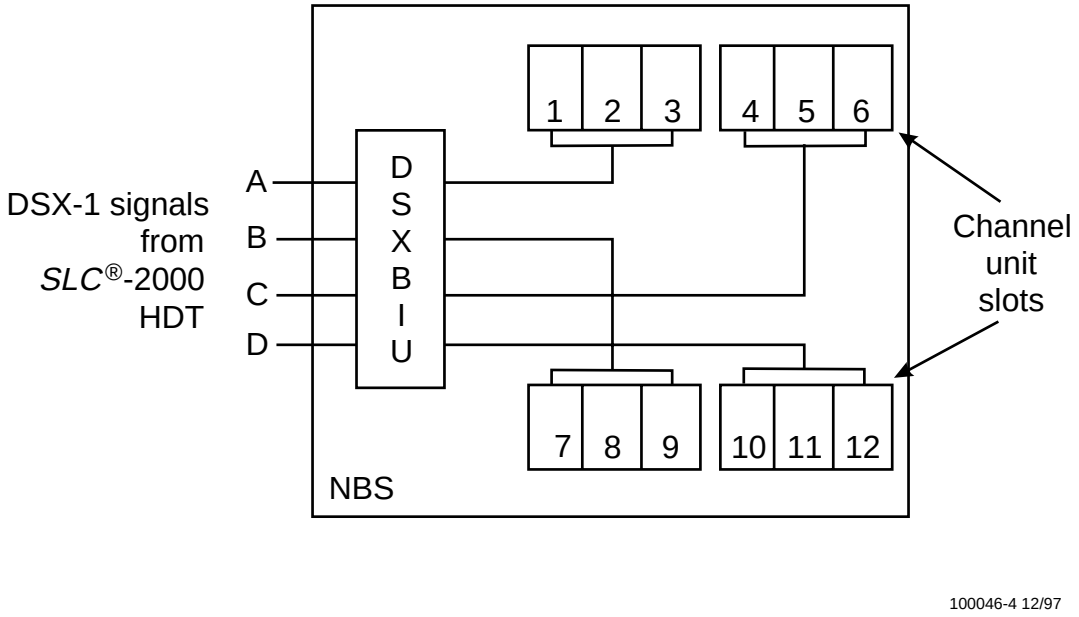

Figure 8-14. Actual NBS V-DT Configuration (Octet Mode)

Using the *virtual* concept as shown in Figure 8-15, the *SLC*-2000 HDT software, when provisioning ISDN circuits, “thinks it sees” a six-slot V-DT instead of a three-slot V-DT. As Figure 8-15 shows, slots 4, 5, and 6 of the V-DT are *not* physically present. However, they are present in the software and are called *virtual slots*, actually representing the third and fourth lines on the *SPQ*494 ISDN channel units.

When installing and cross-connecting ISDN circuits in an NBS with DSX-1 feeders provisioned for the octet mode, you must understand the relationships between the NBS, octet mode, and actual or virtual slots. Refer to Figure 8-15 to understand these concepts.

- ***Addressing the NBS Quadrant***. You must address each quadrant of the octet NBS using its DT Servers address in the MDS assembly at the *SLC*-2000 HDT (MDS shelf number, MDS shelf slot number).

- ***Addressing the Slots in the NBS Quadrant***. Each quadrant's slots (both real and virtual) are numbered the same for provisioning (Figure 8-15). For example, the physical slots fed by DSX-1 signal D are numbered 10, 11, and 12 in the NBS. But when provisioning with the software from the *SLC*-2000 host digital terminal CIT, they are numbered 1, 2, and 3 (plus 4, 5, and 6 virtual slots).

  NOTE:
  Virtual slot 6 is *never* addressed for ISDN line provisioning.

SPQ494 Channel Unit Drop Identifications. The four ISDN 2B+D drops are identified in the software as follows:

— ***SPQ494 channel unit in slot 1 of the quadrant*:**
drop 1 = slot 1, line 1
drop 2 = slot 1, line 2
drop 3 = slot 4, line 1 (virtual slot 4)
drop 4 = slot 4, line 2 (virtual slot 4)

— ***SPQ494 channel unit in slot 2 of the quadrant*:**
drop 1 = slot 2, line 1
drop 2 = slot 2, line 2
drop 3 = slot 5, line 1 (virtual slot 5)
drop 4 = slot 5, line 2 (virtual slot 5)

- ***AUA94 Channel Unit Drop Identifications***. The drops for the AUA94 in slot 3 do not need virtual slots. The two ISDN 2B+D drops in slot 3 are identified in the software as follows:

  drop 1 = slot 3, line 1
  drop 2 = slot 3, line 2

- ***POTS and Special Service Channel Units***. Other channel units do not use virtual slots. For example, the four drops from a POTS quad channel unit in physical slot 8 of the NBS are identified in the software as follows:

  drop 1 = slot 2, line 1
  drop 2 = slot 2, line 2
  drop 3 = slot 2, line 3
  drop 4 = slot 2, line 4

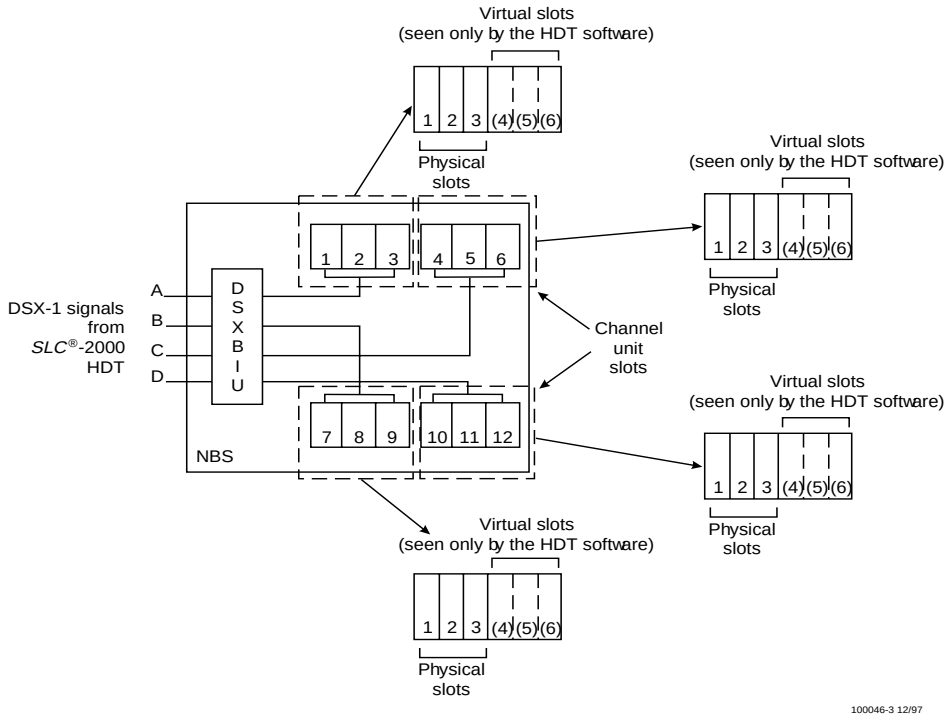

Figure 8-15. Virtual Slot Concept (Octet Mode)

NOTE:
For the specific procedure and software commands to perform this function, see the following documents:

- 363-208-001, *SLC-2000 Access System, User/Service Manual*
- 363-208-003, *SLC-2000 Access System, Commands and Messages* (see the **ENT-CRS-T0** command).

Table 8-14 shows the possible combinations of channel units for a three-slot octet V-DT.

Table 8-14. Channel Unit Slot Restriction When Using an *SPQ*494 in a Three-Slot V-DT

Slot 1 can contain...	Slot 2 can contain...	Slot 3 can contain...
• *SPQ*494 or • AUA94 or • Any other channel unit supported by the NBS	• *SPQ*494 or • AUA94 or • Any other channel unit supported by the NBS	• AUA94 or • Any other channel unit supported by the NBS (except the *SPQ*494 channel unit)

Provisioning channel units other than the *SPQ*494 channel unit in the NBS is done the same way as provisioning channel units at the *SLC*-2000 RT/HDT. Once you provision the shelves in the HDT for fiber distribution (via the *SLC*-2000 CIT or UIP) and you set the number of lines hosted by each DT Server (via the CIT), provisioning of individual channels in the ONU follows the service order flows described for the RT/HDT.

NOTE:
See 363-208-001, *SLC-2000 Access System User/Service Manual,* and 363-205-004, *SLC-2000 MSDT User/Service and Ordering Manual,* for details on provisioning the MSDT or DT Server.

Through the OSMINE process, *SLC*-2000 AIDs are supported in FACS and OPS/INE. In addition, *TIRKS* OS and *NMA* OS organizations provide OSIA and methods to inventory and assign *SLC*-2000 FITL facilities and equipment.

Maintenance Description

9

Contents

Overview 9-1

- Wideband Shelf Maintenance 9-1
  - Single-Ended Maintenance Philosophy 9-1
  - Three-Tiered Operations 9-3
- User Panel and Faceplate LEDs (Operations Tier 1) 9-4
- Craft Interface Terminal (CIT) (Operations Tier 2) 9-5
- Operations System (OS) Interface (Operations Tier 3) 9-6
  - Miscellaneous Discretes 9-6
  - TL1/X.25 9-6

Multi-Vendor OI 9-7

Inservice Upgrades 9-10

Maintenance Signaling 9-10

Fault Detection, Isolation, and Reporting 9-13

- Detection 9-13
- Isolation 9-13
- Reporting 9-13

Protection Switching 9-14

- Path Protection Switching (Path Switched Rings) 9-14
- OC-3/OC-1 Ring Interworking 9-17
- OC-3/OC-1 Path Switched Ring (0x1) 9-17
  - Single-Homed Interworking Application 9-18

Contents

Dual-Homed Ring Interworking Application 9-19

- Status of ACTIVE LED on Rings 9-21
- Low-Speed Equipment Protection 9-21
- Synchronization Reference Protection 9-21

Loopbacks 9-22

Tests 9-23

- Transmission Tests 9-23
- Operations Interface Tests 9-23

Performance Monitoring 9-23

- VT Performance Monitoring 9-25
- DS1 Performance Monitoring 9-25
- DS3 Performance Monitoring 9-27

DS3 Path PM 9-27

DS3 Line 9-28

- Performance Parameters 9-28
- OC-1/OC-3/OC-12 Section Parameters 9-28

Performance Monitoring Enabling 9-28

Severely Errored Frame Seconds (SEFS) 9-29

- OC-1/OC-3/OC-12 Line Parameters 9-29

Performance Monitoring Enabling 9-29

Line Coding Violations (B2 Parity) 9-29

Errored Seconds (ES) 9-29

Severely Errored Seconds (SES) 9-30

Unavailable Seconds (UAS) 9-30

Line Protection Switch Counts 9-30

STS Pointer Justification Count (PJC) 9-30

- STS-1 Path Parameters 9-31

Performance Monitoring Enabling 9-31

STS-1 Path Coding Violations (B3 Parity) 9-31

Errored Seconds (ES) 9-31

Severely Errored Seconds (SES) 9-31

Unavailable Seconds (UAS) 9-31

Contents

- VT1.5 Path Parameters 9-32
  - Performance Monitoring Enabling 9-32
  - Errored Seconds (ES) 9-32
  - Severely Errored Seconds (SES) 9-32
  - Unavailable Seconds (UAS) 9-33
- DS1 Path Parameters 9-33
  - Performance Monitoring Enabling 9-33
  - Errored Seconds (ES) 9-33
  - CV-P Coding Violations 9-33
  - CV-PFE Coding Violations 9-33
  - Severely Errored Second (SES) 9-34
  - Unavailable Seconds (UAS) 9-34
- DS3 Parameters 9-34
  - Performance Monitoring Enabling 9-34
  - DS3 Performance Monitoring (PM) 9-34
  - DS3 Path 9-35
  - DS3 Line 9-36
- DS1 Line Parameters 9-37
  - ES-L Errored Seconds 9-37
- Performance Monitoring Data Storage and Reports 9-37
- Performance Monitoring During Failed Conditions 9-37
- Performance Parameter Thresholds 9-37
- Threshold Crossings Reported to OS 9-38

Reports 9-38

- Alarms and Status Report 9-38
- Provisioning Reports 9-38
- Database Change Transmission to OS 9-39
- Performance Monitoring Reports 9-39
  - TCA Summary Report 9-39
  - Performance Status Reports 9-39
- Maintenance History Report 9-39
- State Report 9-39

Contents

- Path State Report 9-40
- Equipment Report 9-40
- Network Map Reports 9-40

Maintenance Description

9

Overview

This chapter outlines the various features available to the user to maintain and monitor the DDM-2000 FiberReach Multiplexer. Specific trouble clearing and maintenance procedures are provided in the operation and maintenance (TOP) section of this manual.

Wideband Shelf Maintenance

Single-Ended Maintenance Philosophy

A single-ended maintenance philosophy was originally incorporated in the design of the DDM-2000 Multiplexers as part of their optimization for operation in the subscriber loop. The same philosophy is incorporated in the design of the DDM-2000 FiberReach Multiplexers. DDM-2000 FiberReach Multiplexers allow the operation of all FiberReach NEs in a subnetwork from a DDM-2000 in a central office. The DDM-2000 FiberReach Multiplexers use the synchronous optical network (SONET) data communications channel (DCC) to provide craft interface terminal (CIT), remote access. In addition, OSs are available to allow operation of the DDM-2000 Multiplexers from a centralized operations center.

Figure 9-1 shows the single-ended operations (SEO) capability that provides remote access to all DDM-2000 FiberReach systems in a subnetwork from a single DDM-2000 location. This minimizes technician travel because most maintenance, provisioning, and administration can be performed on all DDM-2000 Multiplexers in a subnetwork by accessing any one DDM-2000. This capability is

provided by the DDM-2000 Multiplexers in all subnetwork topologies as long as DCC connectivity is available. The SEO capability can be disabled between DDM-2000 shelves to create subnetwork maintenance boundaries (for example, interoffice applications) or for security reasons.

All single-ended operations features are also available for *SLC®*-2000 Access Systems. See LTP 363-208-000, *SLC-2000 Access System, Applications, Planning, and Ordering Guide*, for more information.

The terms single-ended maintenance and single-ended operations (SEO) are synonymous and have traditionally been used to refer to operations among DDM-2000 systems only. Now that SEO is supported among the 2000 Product Family NEs as well as in multi-vendor applications, the term operations interworking (OI) is more commonly used. OI among multi-vendor NEs is covered later in this chapter.

DDM-2000 FiberReach supports Lucent Technologies 2000 Product Family OI with DDM-2000 OC-3 and OC-12, SLC-2000 and FT-2000, and supports multi-vendor OI in subnetworks with other vendor NEs such as Tellabs TITAN 5500.

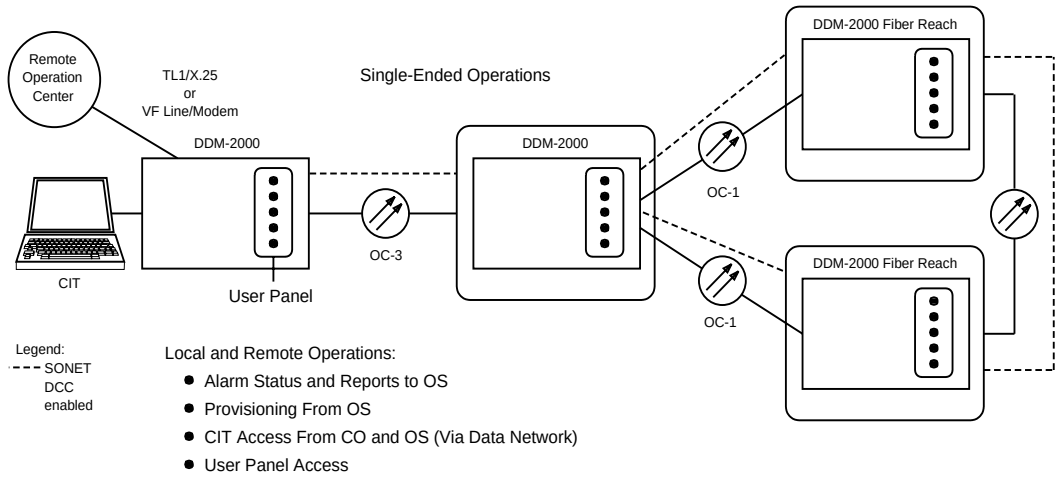

Figure 9-1. DDM-2000 FiberReach Wideband Shelf Single-Ended Operations Philosophy

Three-Tiered Operations

Figure 9-2 shows the three-tiered operation procedures for the DDM-2000 Multiplexers, including DDM-2000 FiberReach wideband shelves. The DDM-2000 FiberReach Multiplexer operation procedures are built on three levels of system information and control, spanning operations needs from summary-level status to detailed reporting.

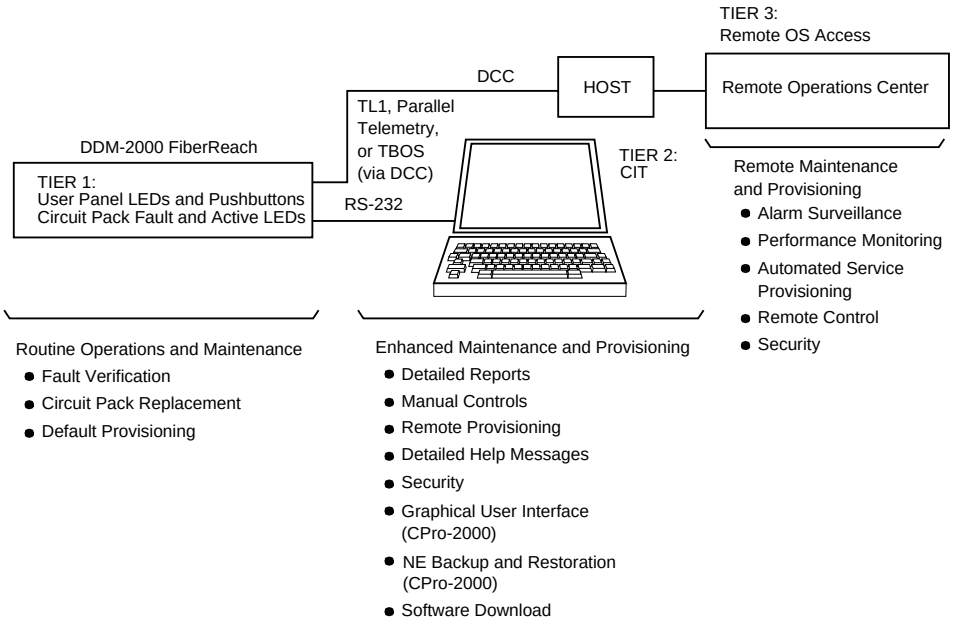

Figure 9-2. Three-Tiered Operations

User Panel and Faceplate LEDs (Operations Tier 1)

Office alarms are provided by a set of discrete relays that control office audible and visual alarms. Separate relays handle critical (CR), major (MJ), and minor (MN) alarms, although the CR and MJ alarms can be wire ORed to the office major, if desired. In DDM-2000 FiberReach Release 4.0, office alarms can be remotely activated through the DCC among some remote Lucent 2000 Product Family NEs. In DDM-2000 FiberReach Release 3 only local office alarms are displayed.

The first operations tier consists of light-emitting diodes (LEDs) and pushbuttons on the user panel and circuit pack faceplates. These allow routine tasks to be performed without a craft interface terminal (CIT) or any test equipment. The user panel provides system-level alarm and status information for local terminals only. The circuit pack faceplate FAULT LEDs allow fast and easy fault isolation to a particular circuit pack.

The user panel LEDs default to show local system information. The highest active alarm level is shown by the red LEDs for CR and MJ alarms; yellow LEDs are shown for MN and power minor (PMN) alarms. A green ACO button/LED is used to activate the alarm cutoff function. When activated, the LED is on. The green ACO button also initiates an LED test when the button is depressed and held. A green PWR ON (PWR ON A and PWR ON B for G4 shelf user panels) LED shows that the power is on and the terminal is receiving a –48 V source. Three yellow status LEDs show abnormal (ABN) conditions, near-end activity, and far-end activity; however, this is only active in R4.0 when remote NE status is enabled. The yellow ABN LED is lighted when a temporary condition, potentially affecting transmission, exists; for example, a manual protection switch or lockout, loopback, or system test in progress.

The UPDATE/INITIALIZE button addresses the local system and is located on the SYSCTL circuit pack. The recessed UPDATE/INITIALIZE button serves several functions during installation and circuit pack replacement. During the first 10 seconds after powering up the SYSCTL circuit pack, depressing this button initializes the nonvolatile memory with provisioning and state information. Secondly, after removing a circuit pack or low-speed input, depressing this button updates the system equipment list to show the slot or signal is now unequipped.

In FiberReach R4.0 (with the remote NE status feature enabled), when any alarm or status condition exists at a remote DDM-2000 Multiplexer, the FAR-END ACTIVITY LED on the user panel is lighted. The other user panel alarm and status LEDs display composite network conditions.

To supplement the user panel's system-level view, each circuit pack provides a red FAULT LED on its faceplate. A lighted FAULT LED shows that the DDM-2000 FiberReach Multiplexer has isolated a failure to that circuit pack. On transmission

and synchronization circuit packs, a flashing FAULT LED shows that an incoming signal to that circuit pack has failed. The green ACTIVE LED shows the current protection switching states of the 1x1 protected circuit packs.

Craft Interface Terminal (CIT) (Operations Tier 2)

The second operations tier provides access to DDM-2000 operations from a CIT over an EIA-232-D interface. System details that can not be obtained from the first operations tier alone can be obtained over the CIT interface. A VT-100 compatible terminal or terminal emulator software running on a PC can be used as a CIT. The dialog is settable to be either CCITT/ANSI MML-compliant, which provides both prompt and command modes with extensive on-line help features for assistance in command execution, or to an asynchronous TL1 interface.

The CIT interface supports OAM&P activities such as loopbacks and testing, protection switching, provisioning, PM, retrieving reports, and security on any and all DDM-2000 Multiplexers in a subnetwork from a single DDM-2000 or FT-2000. The local DDM-2000 or FT-2000 CIT alarm reports may include far-end summary alarm information about other Lucent NEs in the same subnetwork*. Access to remote DDM-2000 Multiplexers is supported via CIT remote login.

The DDM-2000 FiberReach Multiplexer has a front access CIT port compatible with the EIA-232-D standard. The front access port is configured as a data circuit terminating equipment (DCE) for direct terminal access. The front CIT port provides data rates of 300, 1200, 2400, 4800, 9600, and 19200 baud.

An optional graphical user interface (CPro-2000) software tool used with a PC is also available.

— CPro-2000 is a Windows-based graphical user interface that allows a user to obtain common graphical look-and-feel for DDM-2000, *SLC*-2000, and FT-2000 products while continuing to have full access to the ASCII CIT and/or TL1 interfaces of those SONET products. CPro-2000 also mechanizes several tasks such as end-to-end path provisioning in path and line switched rings and provides an NE database backup and restoral feature. The CIT ports of the previously mentioned SONET products can be accessed remotely over data networks and/or dial up modems. Consequently, a user can access all Tier 2 operations using just a terminal or CPro-2000 locally or remotely. See Chapter 10, "Technical Specifications," for hardware and software needed to use CPro-2000. See 190-523-101 and/or 365-576-140, *CPro-2000 User Manual*, for more information.

* This does not apply to Release 3.0/3.1 users. Refer to “Multi-Vendor OI” in this chapter.

Operations System (OS) Interface (Operations Tier 3)

The third operations tier consists of the remote OS interfaces. These OS interfaces include miscellaneous discrete telemetry and a TL1/X.25 interface.

Miscellaneous Discretes

To allow monitoring and control of equipment collocated with a DDM-2000 FiberReach Multiplexer in a remote site, a set of user-definable miscellaneous discrete environmental alarms and controls is provided.

Twenty-one miscellaneous discrete alarm/status points are provided to monitor environmental conditions at remote terminal sites (open door, high temperature, etc.). The first 14 points and points 16 through 21 are activated by contact closures. The fifteenth point (External Minor) is for monitoring of remote structure power and fan apparatus (for example, DC power shelf failure); this point is activated by a -48 volt input.

Four control points are provided to control equipment (pumps, generators, etc.) at remote terminal sites. When activated, the control points provide a contact closure between the control point output and ground.

Miscellaneous discrete alarms/statuses and controls are transmitted between the remote DDM-2000 FiberReach Multiplexers and the DDM-2000 OC-3 Multiplexer host via the SONET section DCC. OS access to all miscellaneous discretes alarm/status points (1 through 21) is provided via TL1/X.25. Access to all miscellaneous discrete alarm/status points is also provided through the CIT. The state of the control points can be reported but not controlled through the CIT.

TL1/X.25

NOTE:
The FiberReach wideband shelf does not provide a direct X.25 interface. Access to the X.25 port on a gateway NE is via the DCC.

DDM-2000's TL1 message-based OS interface provides more detailed reporting and control capabilities than the parallel and serial telemetry interfaces. The interface uses the standard X.25 protocol and needs no mediation device; that is, the interface can be connected directly to an X.25 network. The virtual channels in the X.25 link can be used to provide remote access between users and DDM-2000 via a packet data network. The remote user could be an OS or a user at a terminal. Lucent Technologies is involved in an active OSMINE process to ensure compatibility of DDM-2000 FiberReach Multiplexers with Telcordia Technologies OSs. The DDM-2000 supports TL1 alarm surveillance and

performance monitoring with OSs such as Telcordia Technologies's Network Monitoring and Analysis (NMA). The DDM-2000 supports service provisioning with memory administration OSs such as Lucent's ITM SNC* or Telcordia Technologies's OPS/INE. (FiberReach 4.0 will be supported by TEMS.) The DDM-2000 also supports remote recovery and control functions, installation provisioning, and security over the TL1/X.25 link. The TL1 message set used has been updated to offer full remote reporting and control capabilities. This functional equivalency between the CIT and TL1 allows the option of using either the CIT or TL1 for provisioning tasks, whichever is more convenient. See 824-102-151, *DDM-2000 Multiplexers Operations Systems Engineering Guide,* for more information about OS interfaces.

The OS can use more than one NE as a GNE to provide redundancy and/or to distribute TL1 message volume across multiple X.25 links. The TL1/X.25 GNE serves as a single interface to the OS for the NEs in the same subnetwork. The TL1/X.25 GNE receives operations information from of all the NEs through the DCC and reports this information, as well as its own information, to the OS. The operations information is in the form of TL1 messages. Through the GNE, the OS can send TL1 commands to any NE in the subnetwork. FT-2000 OC-48 Lightwave Systems can serve as the TL1/X.25 GNE for DDM-2000 NEs. For DDM-2000 FiberReach 3.0 and later, OC-3 R13.0 and R15.0, and OC-12 R7.0, Tellabs TITAN 5500/S R5.0 DCS, or other-vendor NEs that adhere to Telcordia Technologies GR-253, can be the TL1/X.25 GNE. DDM-2000 FiberReach can not be a TL1/X.25 GNE itself.

Multi-Vendor OI

To support multi-vendor OI, DDM-2000 FiberReach Release 3.0 and later supports Target ID Address Resolution Protocol (TARP) instead of Lucent Directory Service (LDS). DDM-2000 OC-3 R13.0 or later, OC-12 R7.0, and FT-2000 OC-48 R8.0 also support TARP, thus Lucent 2000 Product Family OI compatibility is still supported but not OI compatibility with previous releases of DDM-2000 and FT-2000. (Refer to the OI Software Compatibility table in Chapter 8.) Both LDS and TARP are directory services that provide NSAP-TID translations. LDS supports additional Lucent-only features, but TARP is the established multi-vendor standard for SONET NEs that support TL1 OS interfaces. DDM-2000 supports the TARP Data Cache (TDC) function to reduce the frequency of TARP propagation throughout the subnetwork and to improve performance. No DSNE is required for TARP.

* The Integrated Transport Management SubNetwork Controller (ITM SNC) is an element management system that supports SONET NEs. ITM SNC provides fault, provisioning, configuration, and security management functions via a GUI.

DDM-2000 FiberReach is developed to be compatible with any other-vendor NEs that also support TARP, OSI, and TL1/X.25 as specified in Telcordia Technologies GR-253. In addition, DDM-2000's TARP Manual Adjacency feature enables DDM-2000 to operate in networks that include CMISE-based NEs which may not support TARP propagation. DDM-2000 FiberReach supports user provisioning of several OSI parameters to allow users to adjust their operations subnetwork, if necessary. For example, to support subnetwork partitioning of large subnetworks, DDM-2000 FiberReach supports user provisioning of NSAP area addresses. DDM-2000 FiberReach does not support Level 2 Intermediate System (IS) functionality itself.

DDM-2000 FiberReach Release 3.0 and later offer compatibility with Tellabs *TITAN* * 5500 DCS R5.0, including TL1/X.25 OS access with TITAN 5500 DCS serving as the TL1-GNE for DDM-2000 FiberReach TL1-RNEs, has been confirmed through cooperative joint testing between Lucent and Tellabs. DDM-2000's compatibility with some other-vendor NEs has also been tested by independent third-parties such as Telcordia Technologies on behalf of the SONET Interoperability Forum (SIF).

DDM-2000 FiberReach Release 3.0 and later are intended to facilitate OS-based centralized operations, and TL1/X.25 OS access is the key standardized multi-vendor OI application.

DDM-2000 FiberReach Release 4.0 supports the following Remote NE Status features:

- Remote office alarms
- Remote CIT alarm reports.

The following Remote NE Status features are not supported in DDM-2000 FiberReach Release 4.0:

- Remote user panel indications
- TBOS
- Parallel telemetry
- Remote ACO Requests.

All of the above features depend on the proprietary exchange of information among Lucent NEs in a subnetwork, specifically the communication of each remote NE's alarm status to other NEs. Although the Remote NE Status features were supported in previous releases of DDM-2000, such Lucent-only operations features in multi-vendor subnetworks would not include other-vendor NEs, due to the lack of applicable standards, and thus would be incomplete.

* *TITAN* is a trademark of Tellabs, Inc.

DDM-2000 FiberReach Release 3.0 and later still support the following Lucent proprietary OI applications between Lucent NEs in multi-vendor subnetworks:

- Remote Craft Interface Terminal (CIT) login
- Remote software download and copy
- Remote NE-to-NE automatic time/date synchronization at start-up.

For more information about DDM-2000 FiberReach Release 3.0 OI, refer to 824-102-144, *Lucent Technologies 2000 Product Family Multi-Vendor Operations Interworking Guide.*

Inservice Upgrades

All DDM-2000 FiberReach software releases support upgrades to future software releases.

Maintenance Signaling

The DDM-2000 FiberReach Multiplexer provides maintenance signaling compliant with the SONET standard (ANSI* T1.105). *The DDM-2000 FiberReach Multiplexer generates and detects the following alarm indication signals (AISs), which notify downstream equipment that a failure has been detected and alarmed by some upstream equipment:

- SONET line AIS
- STS-1 path AIS
- Virtual tributary (VT) path AIS
- DS1 AIS (generated, not reported)
- DS3 AIS.

The DDM-2000 FiberReach Multiplexer also generates and detects the following signals, which notify upstream equipment of a failure detected downstream:

- Line far-end-receive failure (FERF)
- STS-1 path yellow and VT path yellow
- STS-1 and VT path unequipped detection
- An STS-1/VT AIS signal is inserted on paths that are not cross-connected. The user can also provision a shelf to insert STS/VT1.5 unequipped in place of AIS on a path that is not cross-connected.

Figure 9-3 is an example of the AIS, yellow, and FERF signals generated in response to an unprotected incoming OC-1 line failure. In this figure, the labels on the arrows pointing into the DDM-2000 FiberReach Multiplexer indicate the maintenance signals and failure conditions recognized by the DDM-2000 FiberReach Multiplexer. The labels on the arrows pointing out of the DDM-2000 FiberReach Multiplexer indicate the signals generated by the DDM-2000 FiberReach Multiplexer in response to the indicated incoming signals or failure conditions. The **Xs** indicate points of failure, either within the DDM-2000 OC-3 Multiplexer or in upstream equipment. Unlabeled arrows indicate normal

* Registered trademark of American National Standards Institute.

transmission except for OC-1 line AIS; maintenance signaling is in response to unprotected failures.

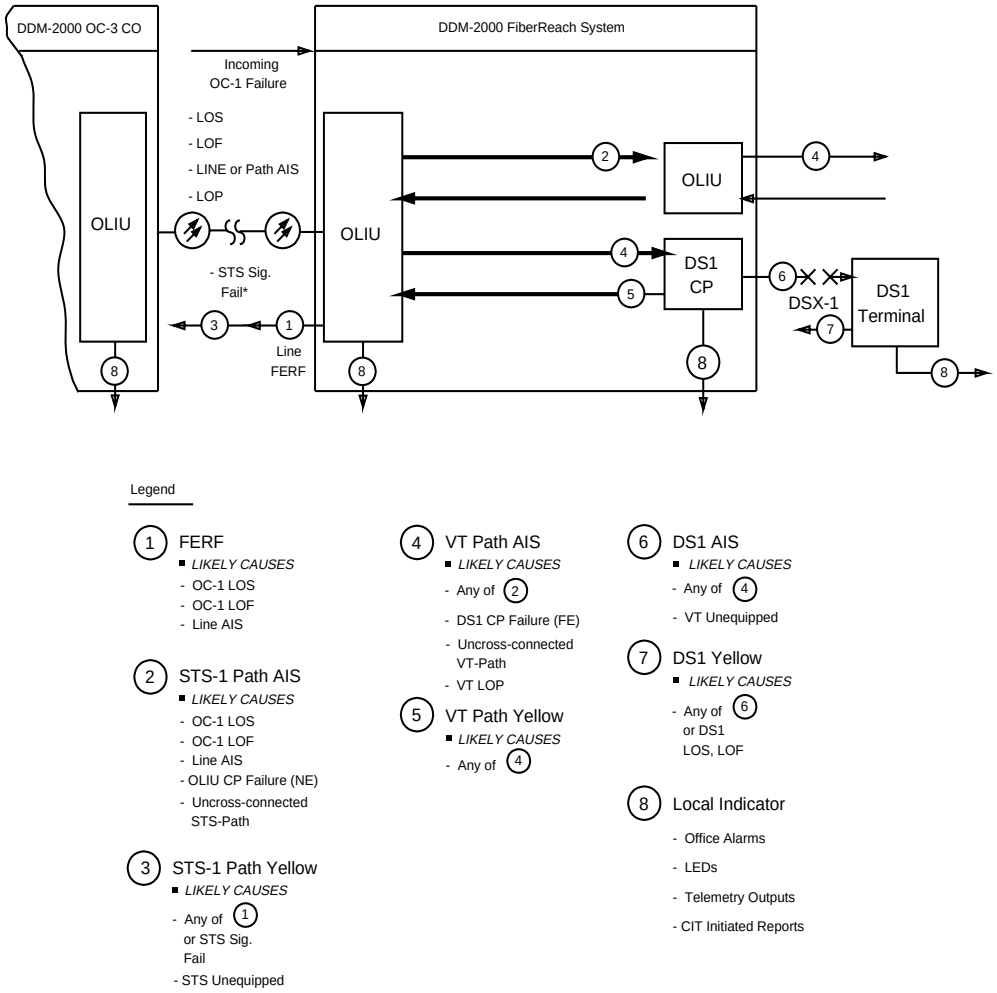

Figure 9-3. Example of Maintenance Signals as a Result of Unprotected Incoming OC-1 Failure for VT1.5 Ring Applications

Figure 9-4 shows an example of the maintenance signals used by the DDM-2000 FiberReach Multiplexer in a VT path-switched ring application.

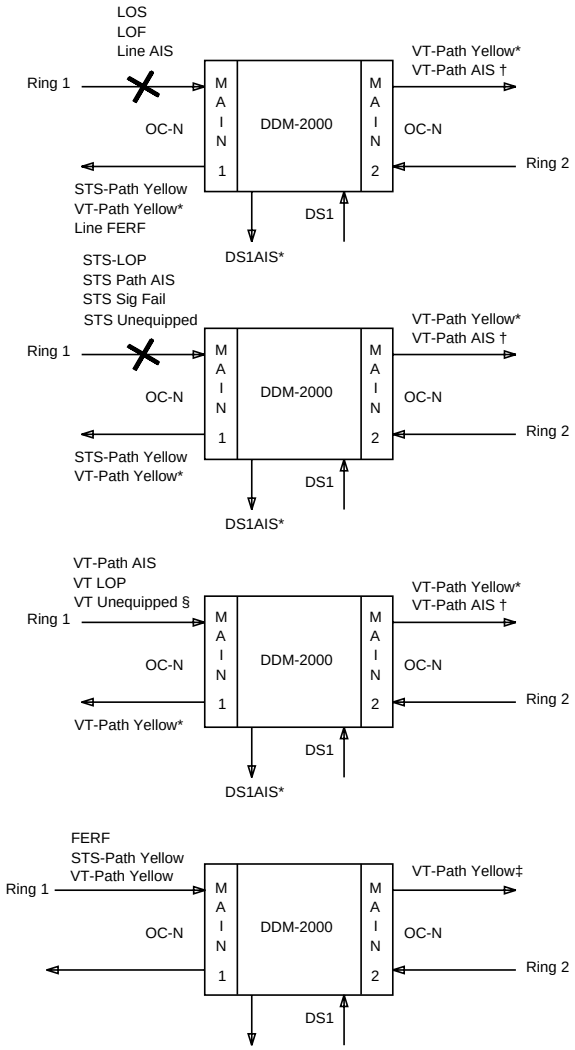

* VT-Path Yellow, DS1 AIS, and VT Path AIS are only sent on DS1/VT paths selected from the failed ring (Ring 1).

† VT-Path AIS is sent on pass-through or continue paths only.

‡ VT-Path Yellow on pass-through or continue paths only.

§ VT-Path AIS not sent for unequipped.

Figure 9-4. Maintenance Signaling — VT Ring Application

Fault Detection, Isolation, and Reporting

Detection

The DDM-2000 FiberReach Multiplexer continuously monitors all circuit packs and incoming signals for faults. Incoming SONET signals are monitored for loss of signal (LOS), loss of frame (LOF), loss of pointer (LOP), and bit error ratio (BER) thresholds, and for the maintenance signals described in the preceding pages. Incoming DS1 and DS3 signals are monitored for LOS and BER thresholds. The BER thresholds for DS1 are based on bipolar 8-zero substitution (B8ZS) or alternate mark inversion (AMI) violations depending on line coding. The BER thresholds for DS3 are based on bipolar 3-zero substitution (B3ZS) coding violations. The DS3 signals received from the fiber are monitored for AIS and out-of-frame (OOF) conditions, unless they are provisioned for clear channel mode. DS1 timing references are monitored for AIS, BER, excessive out-of-frame (EOOF), LOF, LOS, and out-of-lock (OOL) conditions.

Isolation

When a fault is detected, the DDM-2000 FiberReach Multiplexer uses automatic diagnostics to isolate the fault to a particular signal or circuit pack.

Reporting

The system automatically and autonomously reports all alarm and status conditions through the appropriate user panel and equipment indicators, office alarm relays, and through the TL1/X.25 interface. The system stores a record of all fault conditions and reports them on demand through the CIT and the TL1/X.25 interface. The DDM-2000 FiberReach Multiplexer also stores a history of the past 500 alarm and status conditions and CIT events and reports them on demand through the CIT or TL1 interface. Each event is real time and date stamped.

If the diagnostic determines that a circuit pack has failed, the red FAULT LED on that circuit pack is turned on. If an incoming electrical signal from the DSX fails, the red FAULT LED on the affected circuit pack flashes on and off in one-second intervals. A failed incoming optical signal has the same effect.

The DDM-2000 FiberReach Multiplexer provides alarm holdoff and clear delays. The alarm holdoff delays prevent transient failures from causing unnecessary maintenance activity. The office alarms are not activated and the OSs are not notified until a failure lasts at least as long as the alarm holdoff delay. Alarm clear delays prevent premature clearing of alarms. Alarm indications are not cleared

until a fault condition has been clear for at least as long as the alarm clear delay. Incoming signal failure conditions, AIS, and FERF signals are subject to the provisionable holdoff delay and a fixed 15-second clear delay. Yellow signals are not subject to holdoff or clear delays. Circuit pack failures (except control circuit pack failures) are subject to the provisionable holdoff and clear delays. Refer to the **`set-attr-alm`** and **`rtrv-attr-alm`** commands in Chapter 11, "Commands and Reports."

Protection Switching

The DDM-2000 FiberReach Multiplexer provides equipment protection switching of all transmission and synchronization circuit packs, and SONET standard line protection switching for OC-1/OC-3/OC-12 lines. Installation of some protection equipment is optional. Protection switches are caused by automatically detected faults in the circuit packs or OC-1/OC-3/OC-12 lines and by external commands from a CIT or TL1/X.25 interface. Refer to the **`switch-fn`**, **`switch-ls`**, and **`switch-sync`** commands in Section 11, "Commands and Reports." For path switched rings, path protection switching is used. Refer to "Path Protection Switching (Path Switched Rings)" paragraphs in this section and the **`switch-path-vt1`** or **`switch-path-sts1`** commands in Section 11, "Commands and Reports."

Path Protection Switching (Path Switched Rings)

The path switched ring application is based on the Telcordia Technologies TR-TSY-000496/GR-1400 path protection switching scheme.

The path protection switched ring has two single-fiber counter-rotating rings as shown in Figure 9-5. Each node on the ring terminates four fibers: a transmit and receive fiber in each direction. The architecture of the ring is designed to protect against any single point of failure, including a node failure, single fiber cut, or dual fiber cut. A node failure in a ring affects only traffic dropped at the failed node.

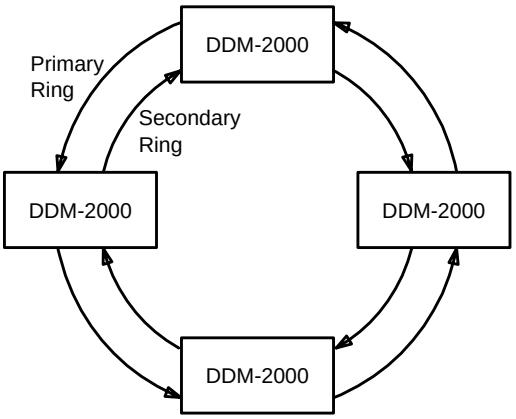

Figure 9-5. Two-Fiber Unidirectional Ring

The signal that enters the ring is protected on a SONET path basis as switching is performed independently for each path. Because of the ring's unidirectional operation, time slots must be reserved all the way around the ring for all ring traffic, limiting the capacity of the ring to the OC-N line rate. DDM-2000 FiberReach provides VT1.5 path protection.

Path protection switched rings feed a SONET payload from the ring entry point, simultaneously in both rotations of the ring, to the signal's ring drop or exit point as shown by traffic AC and CA in Figure 9-6a. This duplication of the signal that enters the ring is called a "head-end bridge." The node that drops the signal from the ring monitors both ring rotations and is responsible for selecting the signal that has the highest quality based on LOS/LOF, path alarm indication signal (AIS), and path bit error rate (BER) performance. This function at the ring exit point is called a "tail-end switch." The system provides nonrevertive switching. All detected hard failures (LOS, LOF, LOP, line AIS, STS-1 or VT1.5 path AIS, or STS-1 path signal failure or signal degrade based on BER for path protected rings) result in AIS insertion in the outgoing signals. This allows the drop node to detect path failures and to select the good path.

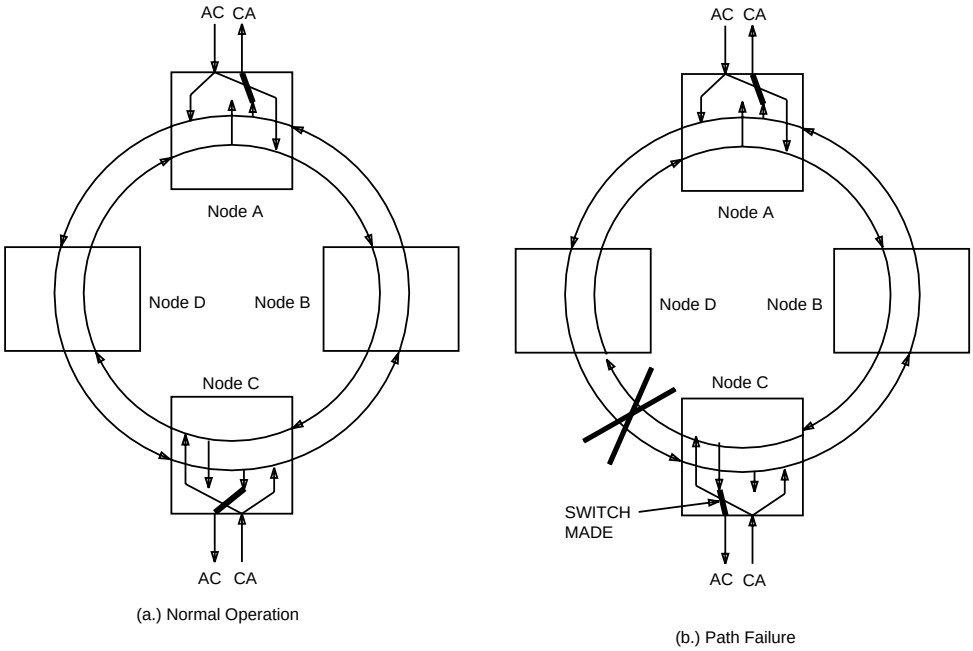

Figure 9-6. Path Protection Switching

The user can set STS-1 and VT1.5 signal degrade thresholds using the **`set-sts1`**, **`set-vt1`**, **`rtrv-sts1`**, and **`rtrv-vt1`** commands at a *drop* node on a protected ring. Under normal conditions, both incoming SONET path signals to the switch selection point are of high quality, and the signal can be selected from either ring. A failure or a transmission degradation on one of the rings requires that the other ring path be selected; path selection occurs within 60 milliseconds after a hard failure condition. Figure 9-6b shows how traffic is switched when a dual-fiber cut occurs. The system provides nonrevertive switching to minimize the impact on critical customer services by giving the service provider control when, and if, the critical service should revert to a particular ring. A manual path protection switching command allows switching back to the original path for ease of ring maintenance. Refer to the **`switch-path-vt1`** or **`switch-path-sts1`** command in Chapter 11, "Commands and Reports."

OC-3/OC-1 Ring Interworking

The DDM-2000 OC-3 Multiplexers support both dual-homed and single-homed FiberReach ring interworking applications to provide end-to-end protection from loss of service on traffic traveling over interconnected rings. The dual-homed configuration provides two points (nodes) of interconnection between the OC-3 Multiplexer ring and the FiberReach OC-1 ring to insure a continuation of service between rings, should one interconnecting node fail. The DDM-2000 OC-3 ring interconnects with the FiberReach ring through 0x1 interfaces. The 0x1 interface on the DDM-2000 OC-3 Multiplexer passes traffic from one direction of the OC-3/OC-1 ring to one direction of the FiberReach ring. There is no bridging of traffic onto both rings at the 0x1 interface as there is at a ring drop point. Also, no path protection switching or line protection switching is performed on the OC-3 for traffic connected to the 0x1 interface. Path protection switching is performed on the FiberReach nodes and on the DDM-2000 OC-3 nodes at the traffic exit (drop) points.

OC-3/OC-1 Path Switched Ring (0x1)

The OC-3/OC-1 path switched ring is similar to the OC-3/OC-12 ring-on-ring. A DDM-2000 FiberReach shelf interconnects with a DDM-2000 OC-3 ring host shelf through low-speed OC-1 interfaces on the OC-3 ring shelf. VT/STS path protection switching is done on the DDM-2000 FiberReach shelf.

In single homing, the DDM-2000 FiberReach ring interconnects through a pair of low-speed OC-1 0x1 interfaces on the OC-3 shelf.

In dual homing, the OC-1 ring interconnects through the low-speed OC-1 0x1 interfaces on two separate and normally non-collocated OC-3 shelves.

Single-Homed Interworking Application

Figure 9-7 shows a single-homed FiberReach configuration. A single DDM-2000 OC-3 shelf provides the point of interconnection between the two rings. On the OC-3 shelf, traffic from one ring is cross-connected through a 0x1 interface to one direction on the other ring. The OC-3 shelf requires two OC-1 OLIUs in a function unit to interface both sides of the FiberReach ring. No line or path protection switching is performed for the 0x1 interface. Path protection switching is performed at the exit points as in the simple ring application previously discussed.

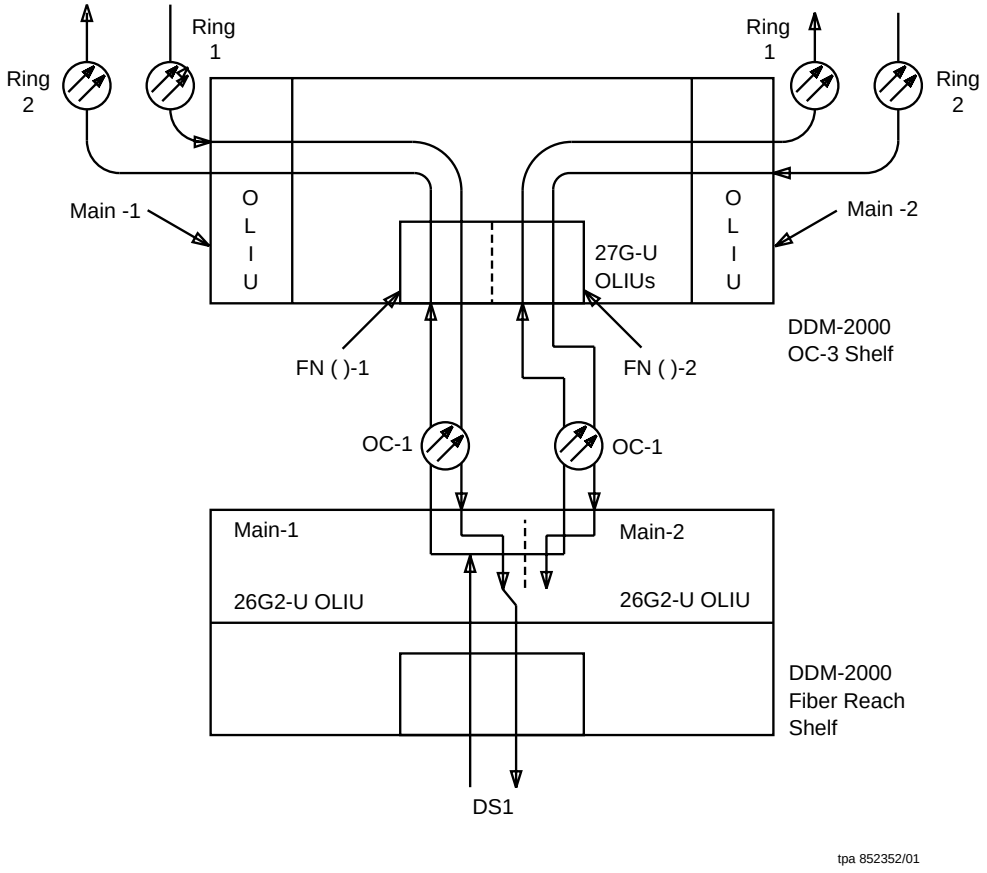

Figure 9-7. Single-Homed Ring Interworking Application

Dual-Homed Ring Interworking Application

Figure 9-8 shows a dual-homed FiberReach configuration. This application requires two DDM-2000 OC-3 Multiplexers to provide redundant points of interconnection between the FiberReach and the DDM-2000 OC-3 ring. The same 0x1 interface is used as for the single-homed application. However, for the dual-homing application, only one 27-type OLIU is required in the DDM-2000 OC-3 function unit to interface one side of the FiberReach ring.

Another FiberReach extension can use the remaining -1 or -2 slots, as long as the bandwidth is not violated. For instance, assume you had a dual homed application where one OC-3 shelf is hosting and terminating one rotation of the subtending OC-1 ring through OC-1 port # 1 on the dual OC-1 (27-type OLIU) in FN-A-1, and another OC-3 shelf is hosting and terminating the other rotation of the subtending OC-1 ring through the OC-1 port #1 on the dual OC-1 (27-type).

As a result, both 27-type OLIU circuit packs located in FN-A-1 of one OC-3 shelf and FN-A-2 of the other OC-3 shelf still have one OC-1 port available (OC-1 #2) to be used for another dual-homed application to host another OC-1 ring, or this OC-1 port can be used to host a single-homed application, which in this case requires the presence of another 27-type OLIU in FN-A-2.

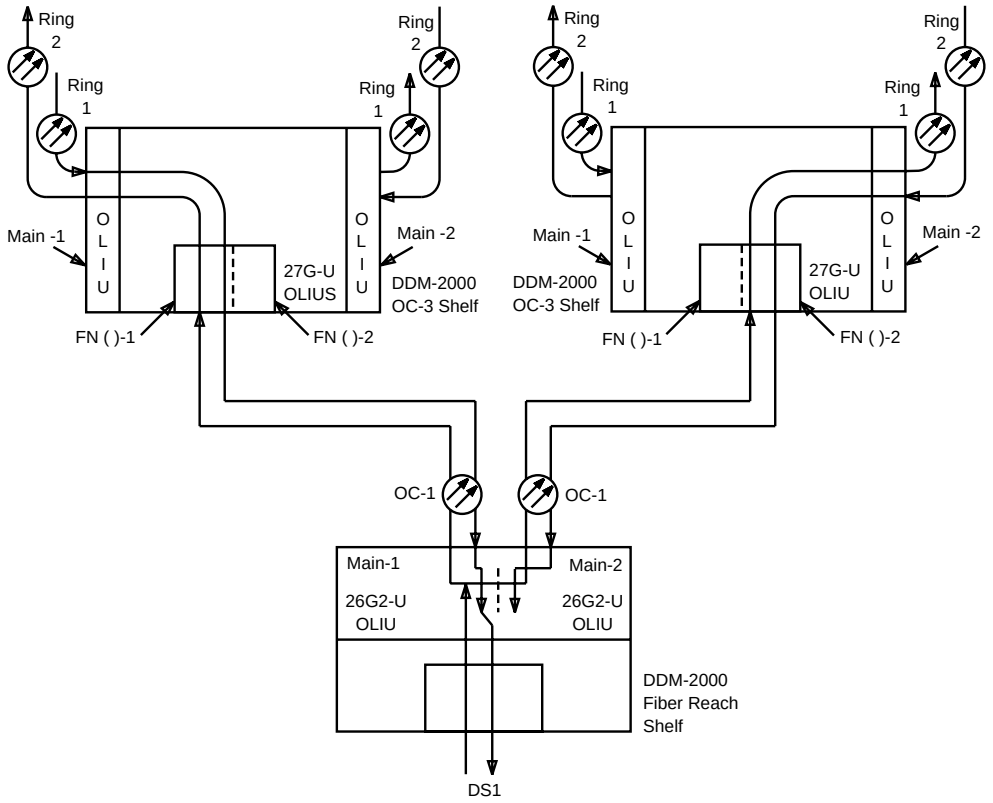

Figure 9-8. Dual-Homed Ring Interworking Application

Status of ACTIVE LED on Rings

In all ring applications, ACTIVE LEDs on each Main OLIU are always lighted because it is not known if a signal on that OLIU is currently being selected by a far-end network element.

Low-Speed Equipment Protection

NOTE:
The protection module is determined by protection modules that are shipped with each wideband shelf. The module is plugged into P2, the protection bus connector located on the rear of the shelf. Along with the modules, labels are shipped for identifying the low-speed slots.

The DDM-2000 FiberReach Multiplexer offers 1x1 or 1x7 protection revertive switching. In a 1x1 protection configuration, the eight slots are divided into four low-speed groups — A, B, C, and D. The bottom four slots are the service A, B, C, and D slots and the top four slots are the associated protection A, B, C, and D slots. To prevent frequent protection switches caused by intermittent failures of a DS1 or T1EXT circuit pack, the system provides an "automatic lock" feature. If four automatic protection switches are done on the same DS1 or T1EXT circuit pack within a 10-minute interval, traffic is automatically locked onto the protection circuit pack and the automatic lock is reported as a minor alarm. The automatic lock can be reset manually using the **`switch-ls`** command. It resets automatically at midnight or if the affected DS1/T1EXT circuit pack is replaced. The DDM-2000 FiberReach Multiplexer also supports unprotected equipment configurations. DS1 and T1EXT circuit packs can be mixed in a 1x7 protection group but only one pack type can be protected.

The DDM-2000 FiberReach Multiplexer provides very flexible low speed equipment protection schemes to accommodate mixed services applications. The schemes include 1X1 protected or 1x7 protected configurations, provisionable by the user. Provisioning is done at installation using a low-speed protection assembly on the backplane. The protection scheme can be changed (for example, upgrading from 1x1 to 1x7) but must be done out-of-service.

Synchronization Reference Protection

For DDM-2000 FiberReach, the synchronization references are 1×1 protected. If neither reference is available, the system automatically switches to "holdover" timing mode. The system uses synchronization messaging to determine the quality of the loop timing references by reading the synchronization messages in

the OC-1/OC-3/OC-12 transport overhead bytes. If the quality is not adequate, the system will switch to holdover until manually switched to a good reference.

Automatic synchronization reconfiguration is always enabled; thus the system will automatically select the highest quality reference. See "Synchronization Messaging" in Chapter 5, "Transmission and Synchronization Interfaces" and the **set-sync** command in Chapter 11, "Commands and Reports."

The system can be provisioned to revertive or nonrevertive timing mode switching. The default is revertive. If provisioned for revertive mode switching, the system automatically switches out of holdover mode to line timing when an unprotected timing reference failure clears. If provisioned for nonrevertive mode switching, the system must be manually switched from holdover mode to line timing mode when an unprotected timing reference failure clears. Refer to the **rtrv-sync**, **set-sync**, and **switch-sync** commands in Chapter 11, "Commands and Reports."

Loopbacks

The DDM-2000 FiberReach Multiplexer allows technicians to set up loopbacks on all low- and high-speed interfaces. Low-speed DS1/DS3 electronic loopbacks, directed toward the high-speed OC-1/OC-3/OC-12, can be individually controlled from the CIT. DS1/DS3 facility loopbacks toward the DSX can also be set up for DS1/DS3 signals. Active electronic loopbacks are noted by the user panel's abnormal (ABN) indicator and in the alarm and status report. Refer to the **opr-lpbk,opr-lpbk-t1** and **rls-lpbk-t1** commands in Chapter 11, "Commands and Reports."

Beginning with Release 3.1 of FiberReach, the **opr-lpbk-t3** and **rls-lpbk-t3** commands are available when using the DS3 circuit packs in the Function Units slots. Refer to Chapter 11, "Commands and Reports," for explanations of these commands.

Front access to the OLIU optical connectors allows an easy manual OC-1, OC-3. or OC-12 optical loopback. This loopback is set up by connecting a fiber jumper from the OLIU output to its input. An optical attenuator is required for this loopback.

Tests

Transmission Tests

Technicians can use the DDM-2000 FiberReach Multiplexer internal testing capabilities for installation and manual troubleshooting. DS1 and DS3 test signal generators and detectors are integrated in the system, eliminating the need for external test equipment to do transmission testing.

The DDM-2000 FiberReach Multiplexer lets technicians test specific signals and system components. For example, technicians can manually enable the integrated test signal generators and detectors for a DS1/DS3 low-speed interface. Signal tests can be run selectively in the multiplex or demultiplex direction. Refer to the **`test-trmsn-t1`** commands in Chapter 11, "Commands and Reports."

Beginning with FiberReach Release 3.1, the **`test-trmsn-t3`** command is allowed ONLY if the shelf is equipped with 28-type OLIUs in Main and DS3 circuit packs in the Function Units slots. Beginning with FiberReach Release 4.0, the **`test-trmsn-t3`** command is also allowed if the shelf is equipped with 29-type OLIUs in Main and DS3 circuit packs in the Function Units slots. Refer to the **`test-trmsn-t3`** commands in Chapter 11, "Commands and Reports," for details.

Operations Interface Tests

The DDM-2000 FiberReach Multiplexer provides tests for LED indicators, office alarms, and the system controller. Refer to the **`test-led`**, **`test-alm`**, and **`test-sysctl`** commands in Chapter 11, "Commands and Reports."

Performance Monitoring

The DDM-2000 FiberReach Multiplexer uses performance monitoring (PM) to support proactive maintenance of the network and tariffed service performance verification. Proactive maintenance refers to the process of detecting degrading conditions not severe enough to initiate protection switching or alarming, but indicative of an impending hard or soft failure. Hard and soft failures result in reactive maintenance.

Proactive maintenance consists of monitoring performance parameters associated with the SONET sections, lines, and paths within the SONET network. Table 9-1 lists the SONET performance parameters monitored by DDM-2000 systems. These parameters are thresholded to indicate degraded performance. When a performance-monitoring threshold is crossed, it is reported to the OS as a threshold crossing alert (TCA). With TL1/X.25, all threshold crossings associated

with a particular path can be correlated, and the likely source of the degradation can be identified.

Figure 9-9 shows DS1/DS3 line and path performance monitoring.

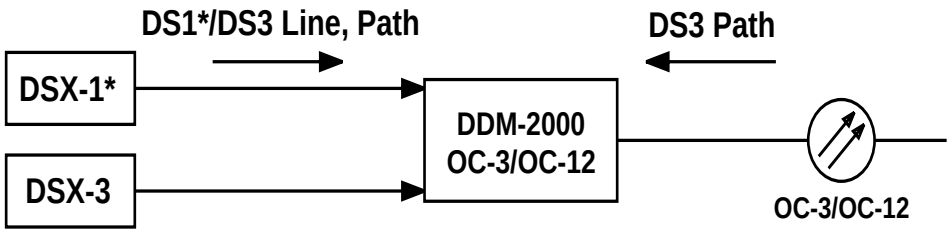

*** OC-3 Shelves Only.**

Figure 9-9. DS1/DS3 Line and Path and DS3 Path Performance Monitoring (PM)

The following are definitions and explanations for the terms used in the figure:

- Line — A line is a physical transport vehicle that provides the means of moving digital information between two points in a network. The line is characterized by a metallic transmission medium and its specific coding type. A line is bounded by its two end points, known as line terminations. A line termination is the point where the electrical, bipolar line signal is generated and transmitted, or received and decoded.
  - DS1 — DS1 line for AMI or B8ZS coding is monitored and the errored second (ES-L) data is displayed for the incoming signal from the DSX-1.
  - DS3 — DS3 line for B3ZS coding is monitored and the data is displayed in CV-L, ES-L, and SES-L registers for the incoming signal from the DSX-3.
- Path — A path is a framed digital stream between two points in a network and represents digital signal transport at a specified rate, independent of the equipment and media providing the physical means of transporting the signal. A path is defined by its two end points, called path terminations, where its frame structure is generated and decoded. A path may be carried wholly within one transport segment (line), or it may span a sequential arrangement of two or more transport segments.

— DS1 — DS1 near-end path is monitored for SF framing and both near-end and far-end paths are monitored for ESF framing. The data is displayed in ES-P, SES-P, and UAS-P categories. CV-P is also displayed.

— DS3 — DS3 path incoming from the fiber (high-speed side) is monitored for P-bit and F&M bit and the data is displayed in CV-P, ES-P, SES-P, and UAS-P registers. In addition, severely errored frame second (SEFS) is also monitored and displayed.

DS3 path incoming from the DSX-3 (low-speed side) is also monitored, in addition to monitoring the path from the fiber, for P-bit and F&M bit. The same registers are also displayed for the data from the DSX-3. DS3 path from both the fiber and the DSX-3 are monitored for C-bit and are displayed in the same registers as above. The far-end data (FEBE bits) is monitored and displayed as well.

VT Performance Monitoring

VT performance monitoring provides performance monitoring of the V5 byte for errored seconds, severely errored seconds, and unavailable seconds. VT performance monitoring is a feature package option that requires feature package software licensed by Lucent and the use of the **`set-feat`** command to enable the feature.

The counts are retrieved using the **`rtrv-pm-vt1`** command to determine if the service is operating within tariffed limits.

DS1 Performance Monitoring

DS1 performance monitoring is a feature package option that requires feature package software licensed by Lucent and the use of the **`set-feat`** command to enable the feature. Refer to Figure 9-10. DS1 performance monitoring measures near-end performance and extended superframe format far-end performance report of the incoming DS1, allowing service providers to determine the end-to-end performance of a DS1 signal. Tariffed service verification consists of monitoring performance parameters that can be associated with the customer's end-to-end service. The DDM-2000 OC-1 Multiplexer provides this capability for DS1 services with the DS1 performance monitoring feature. Based on the American National Standards Institute *ANSI* T1.403 extended superframe format (ESF), this capability retrieves performance report messages written into the ESF data link by the customer's terminal equipment.

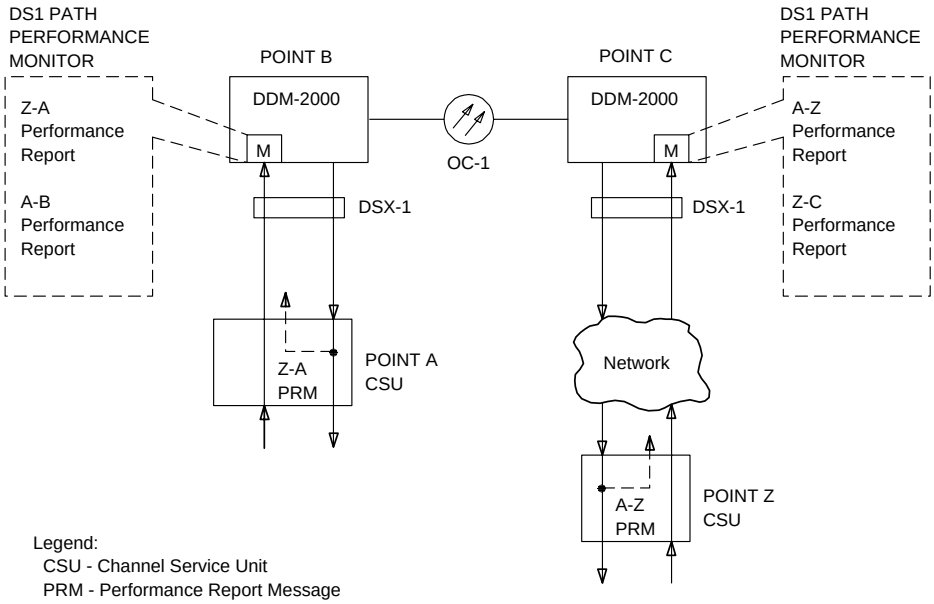

Figure 9-10. DDM-2000 Multiplexer DS1 Path Performance Monitoring

From these messages, the DDM-2000 Multiplexer can determine and report the end-to-end error performance of the entire DS1 link *as seen by the customer*. These parameters, listed in Table 9-1, are thresholded and reported to indicate degraded performance. The counts are retrieved using the **`rtrv-pm-t1`** command to determine if the service is operating within tariffed limits.

Application of the DS1 performance monitoring feature for tariffed service verification is shown in Figure 9-10. Here an ANSI T1.403 ESF format DS1 service carried between points A and Z, using a DDM-2000 system and terminated at the customer's premises with channel service units (CSUs). At the "A" end, the received error performance (Z - A) is detected and written by the customer's CSU onto the outgoing (A - Z) ESF data link, as shown by the dashed lines, as a performance report message (PRM). The DS1PM circuit pack interfacing the A end reads the incoming DS1 signal's PRM (received from the customer's premises) and reports the Z - A performance. Likewise, the OC-3 system interfacing the Z end reports the A - Z performance by reading the PRM from the customer's "Z" CSU. By reviewing the data from each OC-3 system, the service provider can determine the complete end-to-end performance (A - Z and Z - A) of the customer's service.

Additionally, each DS1PM circuit pack measures the near-end performance of the incoming DS1, allowing the service provider to determine if a good DS1 signal was received from the customer before transporting it through the network. This information can then aid in sectionalizing any reported performance problems. The DS1PM circuit pack can also provide this same near-end information for superframe (SF) formatted (sometimes known as "D4 framing") DS1 services, but complete end-to-end performance verification is limited due to the lack of the PRM in the SF format.

See the “Performance Monitoring Parameters Provisionable via the CIT” table for the DDM-2000 FiberReach Multiplexer in Chapter 10, “Technical Specifications.”

DS3 Performance Monitoring

DS3 Path PM

With BBG4B DS3 circuit packs, the DDM-2000 FiberReach Multiplexer provides three DS3 path PM options: P-bit (parity bit), adjusted F&M bit (frame and multiframe bit), and C-bit. The options are selected using a command that also sets the PM mode to "on" (default) or "off," which enables or disables the monitoring and reporting of DS3 path PM data (see Table 9-1).

P-Bit

When provisioned for P-bit, the system calculates and provides counts of DS3 CV-P, ES-P, SES-P, and UAS-P incoming from the fiber and DSX. Quarter-hour and current day registers are provided with provisionable TCAs on a per-shelf basis. SEFS are also monitored.

Because P-bits can be corrected at nodes provisioned for VMR along a DS3 path, the DS3 P-bit PM data may not provide a complete report of the end-to-end DS3 path errors.

Adjusted F&M Bit

Adjusted F&M bit PM provides an alternative method for determining and accumulating DS3 path performance data based on an error estimation technique using errors on the F&M framing bits to approximate the actual error counts in the DS3 path payload. F&M bits are not corrected at nodes provisioned for VMR along a DS3 path. When provisioned for adjusted F&M bit, the system calculates and provides estimated counts of DS3 adjusted F&M bit CVs, ESs, SESs, and UASs incoming from the fiber and DSX. Quarter-hour and current day registers are provided with provisionable TCAs on a per-shelf basis. SEFS are also monitored.

C-Bit

When the DS3 path PM C-bit option is selected, both near-end and far-end (far-end block errors — FEBE) PM data are monitored and displayed.

The system provides counts of DS3 C-bit parity coding violations (CV-P), ES-P, SES-P, and UAS-P incoming from both the DSX-3 and the fiber. The type of PM is provisioned per DS3 service by a CIT command.

For C-bit PM, the DS3 service can be provisioned in violation monitor (VM) or violation monitor and removal (VMR) modes. In VMR mode, the C-bit errors are not corrected as in the P-bit option.

Quarter-hour and day registers are provided with provisionable TCAs. The TCAs are provisionable on a per-shelf basis. SEFS counts are also provided.

DS3 Line

DS3 line parameters include line coding violations (CVL), errored seconds (ESL), and severely errored seconds (SESL). DS3 line PM provides provisionable bit error ratios (TCAs) for all DS3 line parameters. For CVL parameters, bit errors can also be provisioned in ratios such as 10^{-7}, 10^{-8} and 10^{-9}.

Performance Parameters

The “Performance Monitoring Parameters Provisionable via the CIT” table in Chapter 10, “Technical Specifications” lists the performance parameters monitored by the DDM-2000 FiberReach Multiplexer. The collection of performance parameters depends directly on slot state transitions, port states, and cross-connections.

OC-1/OC-3/OC-12 Section Parameters

Performance Monitoring Enabling

Collection of section parameters for OC-1/OC-3/OC-12 interfaces is initiated when a slot is equipped with an OLIU circuit pack. Parameters continue to be available in reports and generate appropriate threshold crossing alerts until the OLIU is removed and the **`update`** command or the UPD/INIT button is pressed.

Severely Errored Frame Seconds (SEFS)

This parameter counts the number of seconds during which an out-of-frame, loss-of-signal, or OLIU circuit pack failure occurred. SEFSs are counted and thresholded independently for each OC-1/OC-3/OC-12 interface.

OC-1/OC-3/OC-12 Line Parameters

Performance Monitoring Enabling

Collection of line parameters for OC-1/OC-3/OC-12 interfaces is initiated when a slot is equipped with an OLIU circuit pack. Parameters continue to be available in reports and generate appropriate threshold crossing alerts until the OLIU is removed and the **`update`** command or the UPD/INIT button is pressed.

Line Coding Violations (B2 Parity)

To monitor the performance of the OC-1/OC-3/OC-12 line, the line BIP-8 (B2 parity) is calculated, written, and checked for errors. The line B2 parity violation counter is incremented for each line BIP error detected. Each line BIP-8 can detect up to eight errors per STS-1 frame. The contents of the 3 or the 12 line B2 parity violation counters associated with the OC-3 or OC-12 line are added to form a composite B2 parity violation count. Coding violations are not counted during seconds that contain a line AIS, loss of signal, loss of frame, or during an unavailable second (UAS). The B2 parity violations are counted and thresholded independently for service and protection lines.

Errored Seconds (ES)

An "errored second" is a second in which one or more B2 parity violations are detected. An errored second "type A" is a second in which exactly one B2 parity violation is detected. An errored second "type B" is a second in which more than one and less than 12 for OC-1, or more than one and less than 32 for OC-3, or more than one and less than 124 for OC-12, B2 parity violations are detected. Seconds that are unavailable seconds are not counted as errored seconds. A second that contains a line AIS, loss of signal, loss of frame or is an unavailable second is not counted as a type A or type B errored second. All three of these parameters are counted and thresholded independently for service and protection lines.

Severely Errored Seconds (SES)

A severely errored second is a second in which 12 or more for OC-1, or 32 or more for OC-3, or 124 or more for OC-12, B2 parity violations are detected or one in which a loss of signal, loss of frame or line AIS occurs. An unavailable second is not counted as a severely errored second. Severely errored seconds are counted and thresholded independently for service and protection lines.

Unavailable Seconds (UAS)

An unavailable second is a second during which the OC-1/OC-3/OC-12 line is "unavailable." A line is considered "unavailable" from the beginning of X consecutive severely errored seconds until the beginning of Y consecutive seconds, none of which is severely errored. X is equal to 10 seconds or, in the case of a failure, the line signal failure. Y is equal to 10 seconds of no severely errored seconds or line signal failure. Unavailable seconds are counted and thresholded independently for OC-1/OC-3/OC-12 interface service and protection line.

Line Protection Switch Counts

Line protection switch counts is the count of the number of protection switches FROM the working OC-3/OC-12 interface line. The count is independently counted and thresholded for both the service and the protection line.

STS Pointer Justification Count (PJC)

This feature provides a TCA from a DDM-2000 shelf when the STS pointer justification count in a performance bin exceeds a user provisioned threshold value. STS PJCs for each SONET line interface are accumulated in 15 minute and 24 hour performance monitoring bins. The TCA is sent via a TL1 autonomous message to the OS and is available through CIT and TL1 PM reports. PJCs are not accumulated during one second intervals in which an STS-1 is in the LOP or AIS state.

For each SONET line interface the system accumulates counts from only one STS-1 tributary during a 1 second monitoring interval. Excessive pointer justifications indicate a frequency error in the network or other potential synchronization problem. For example, a frequency error could be caused by a shelf in holdover or by a frequency offset in an external timing reference in networks with more than one shelf externally timed. The TCA can be provisioned in the frequency offset range from approximately.01 ppm to 10 ppm by setting a threshold for the PJC equivalent to the frequency offset.

STS-1 Path Parameters

Performance Monitoring Enabling

STS-1 path performance monitoring is initiated only when the first VT1.5 cross-connection associated with that STS-1 signal is made and the VT channel is in the IS state. Parameters continue to be available in reports and generate appropriate threshold crossing alerts until the last VT1.5 cross-connection is deleted.

STS-1 Path Coding Violations (B3 Parity)

To monitor the performance of the STS-1 path, the "B3" byte in the STS-1 path overhead is written when the path is originated and checked for errors when the path is terminated. The B3 coding violation counter is incremented for each error detected. Up to eight errors per STS-1 frame can be detected in each STS-1 synchronous payload envelope (SPE). B3 coding violations are counted and thresholded separately for each STS-1 path terminated by the system. Coding violations are not counted during seconds that contain a line AIS, loss of signal, loss of frame, loss of pointer, STS path AIS, or during an unavailable second (UAS).

Errored Seconds (ES)

An "errored second" is a second in which one or more B3 parity violations are detected. Seconds that are unavailable seconds are not counted as errored seconds. An errored second "type A" is a second in which exactly one B3 parity violation is detected. An errored second "type B" is a second in which more than one and less than nine B3 parity violations are detected. All three of these parameters are counted and thresholded independently for each STS-1 path terminated by the system.

Severely Errored Seconds (SES)

A severely errored second is a second in which nine or more B3 parity violations are detected. Severely errored seconds are counted and thresholded separately for each STS-1 path terminated by the system. An unavailable second is not counted as a severely errored second.

Unavailable Seconds (UAS)

An STS-1 path is considered "unavailable" from the beginning of X consecutive severely errored seconds until the beginning of Y consecutive seconds, none of which is severely errored. X is equal to 10 seconds or, in the case of a failure, the STS signal failure. Y is equal to 10 seconds of no severely errored seconds or

STS signal failure. If there is an unprotected STS-1 path terminating equipment (OLIU) failure, unavailable seconds are counted from within 1 second of circuit pack failure to within 1 second of circuit pack recovery.

VT1.5 Path Parameters

Performance Monitoring Enabling

VT1.5 monitoring is initiated when the associated VT1.5 or STS-1 cross-connection is made to a DS1 or DS1PM circuit pack. Parameters continue to be available in reports and generate appropriate threshold crossing alerts until the VT1.5 or STS-1 cross-connection is deleted.

Errored Seconds (ES)

An "errored second" is a second that is not an "unavailable second" in which one or more V5 parity violations or an AIS or LOP is detected. This parameter is counted and thresholded independently for each VT1.5 path terminated by the system.

Severely Errored Seconds (SES)

A "severely errored" second is a second that is not an "unavailable second" in which four or more V5 violations or an AIS or LOP is detected. Severely errored seconds are counted and thresholded separately for each VT1.5 path terminated by the system.

Unavailable Seconds (UAS)

A VT1.5 path is considered "unavailable" from the beginning of X consecutive severely errored seconds until the beginning of Y consecutive seconds, none of which is severely errored. X is equal to 10 seconds or, in the case of a failure, the VT signal failure. Y is equal to 10 seconds of no severely errored seconds or VT signal failure. If there is an unprotected VT path terminating equipment failure, unavailable seconds are counted from within 1 second of circuit pack failure to within 1 second of circuit pack recovery.

DS1 Path Parameters

Performance Monitoring Enabling

Collection of DS1 path parameters is initiated only when a slot is equipped with a DS1PM circuit pack, the DS1 port is in the IS or NMON state, and the DS1 port is provisioned for performance monitoring. Parameters continue to be available in reports and generate appropriate threshold crossing alerts until the input signal to the DS1 interface is removed and the **`update`** command or the UPD/INIT button is pressed. Alternatively, the DS1 path parameter can be disabled by setting the DS1 port to turn off DS1PM by using the **`set-t1`** command.

Errored Seconds (ES)

An "errored second" for a DS1 SF format is a second in which one or more FEs (frame errors), or a DS1 AIS, or a DS1 OOF is detected. A near-end "errored second" for a DS1 ESF path is a second in which one or more CRC-6 violations, or a DS1 AIS, or OOF is detected. Errored seconds are not counted during "unavailable seconds". For a DS1 path with the ESF format, the far-end "errored seconds" values are obtained from the performance report message (PRM) in the DS1 ESF data link.

CV-P Coding Violations

This indicates the number of DS1 near-end path coding violations during the data collection interval. For a DS1 in SF format, this is a count of framing bit errors. For a DS1 in ESF format, this is a count of CRC-6 bit errors.

CV-PFE Coding Violations

This indicates the number of DS1 far-end path coding violations during the data collection interval. This parameter is only applicable to a DS1 signal in ESF format. This is a count of CRC-6 bit errors as reported in the G bits of the PRM.

Severely Errored Second (SES)

For the DS1 SF format, a "severely errored second" is a second in which eight or more FEs are detected, or an OOF, or DS1 AIS is detected. For the DS1 ESF format, a near-end severely errored second is a second in which 320 or more CRC-6 violations, or a DS1 AIS, or DS1 OOF are detected. For a DS1 path with the ESF format, the far-end "severely errored seconds" values are obtained from the PRM in the DS1 ESF data link. Severely errored seconds are not counted during "unavailable seconds". For a DS1 path with ESF format, the far-end "severely errored seconds" values are obtained from the PRM.

Unavailable Seconds (UAS)

A DS1 path is considered "unavailable" from the beginning of 10 consecutive severely errored seconds until the beginning of 10 consecutive seconds, none of which is severely errored. If there is a DS1 pack failure, then unavailable seconds are counted from within 1 second of circuit pack failure to within 1 second of circuit pack recovery. Unavailable seconds are counted and thresholded separately for each DS1 path monitored by the system.

For a DS1 path with ESF format, the far-end "unavailable second" performance is obtained from the PRM.

DS3 Parameters

Performance Monitoring Enabling

Collection of DS3 path parameters are initiated only when a slot is equipped with a DS3 circuit pack, the port is in the IS or NMON state, the DS3 port is provisioned for P-Bit violation monitoring (VM mode) or P-Bit violation monitoring and removal (VMR mode), and a default or manual STS-1 cross-connection is present. Parameters continue to be available in reports and generate appropriate TCAs until the input signal to the DS3 interface is removed and the **`update`** command or the UPD/INIT button is pressed (transitioning to the AUTO state). Alternatively, the DS3 path parameter can be disabled by setting the DS3 port to the clear channel mode (CC) using the **`set-t3`** command. The PM mode parameter should be set to "on" (default) using the **`set-t3`** command to start PM data monitoring and reporting.

The **`set-state-t3`** command is used to turn on and off the alarm due to signal failures from a specified T3 port.

DS3 Performance Monitoring (PM)

The DS3 PM is enabled as specified in Table 9-1.

Table 9-1. DS3 Performance Monitoring Enabling

DS3 Port State	Mode		
	VMR	VM	CC
IS (In Service)	Yes	Yes	No
AUTO	No	No	No
NMON (Not Monitored)	Yes	Yes	No

DS3 Path

CV-P Coding Violations

CV-P coding violations are a count of the number of P-bit, adjusted F&M bit, or near-end and far-end C-bit parity errors in the DS3 signal received from the fiber and the DSX-3. To detect degradation of the signal, these errors are counted and thresholded independently for all DS3 interfaces provisioned in VM or VMR mode. By provisioning all NEs in the DS3 path to the VM mode, CV-Ps can be used as a DS3 path performance parameter when the P-bit option is selected. When the F&M-bit or C-bit option is selected, NEs could be provisioned in VMR or VM mode (see Table 9-2).

Severely Errored Frame Seconds (SEFS)

SESF are a count of the number of seconds during which an OOF or AIS condition exists for a DS3 signal received from the fiber or the DSX-3, or during an unprotected DS3 circuit pack failure. SEFSs are counted and thresholded independently for all DS3 interfaces provisioned in VM or VMR mode.

Errored Seconds (ES-P)

An "errored second" is a second in which one or more DS3 P-bit, adjusted F&M-bit, or near-end and far-end C-bit coding violations are detected. ES are not counted during UAS. ES are counted and thresholded independently for each DS3 path terminated by the system.

Severely Errored Seconds (SES-P)

A "severely errored second" is a second in which 44 or more DS3 P-bit, adjusted F&M-bit, or near-end and far-end C-bit coding violations are detected. SES-P are not counted during UAS. SES are counted and thresholded independently for each DS3 path terminated by the system.

Unavailable Seconds (UAS-P)

An "unavailable second" is a second during which the DS3 path is "unavailable." A DS3 path is considered "unavailable" from the beginning of X consecutive SES

until the beginning of Y consecutive seconds, none of which is severely errored. X is equal to 10 seconds or, in the case of a failure, the DS3 signal failure. Y is equal to 10 seconds of no SES or DS3 signal failures. If there is an unprotected DS3 circuit pack failure, UAS are counted from within 1 second of circuit pack failure to within 1 second of circuit pack recovery. UAS are counted and thresholded independently for each DS3 path terminated by the system. This applies to P-bit, adjusted F&M bit, and near-end and far-end C-bit options.

C-Bit

When the DS3 path PM C-bit option is selected, both near-end and far-end (far-end block errors) PM data are monitored and displayed.

The system provides counts of DS3 C-bit CV-P, ES-P, SES-P, and UAS-P incoming from both the DSX-3 and the fiber. The type of PM is provisioned per DS3 service by a CIT command.

For C-bit PM, the DS3 service can be provisioned in VM or VMR modes. In VMR mode, the C-bit errors are not corrected as in the P-bit option.

Quarter-hour and day registers are provided with provisionable TCAs. The TCAs are provisionable on a per shelf basis. SEFS counts are also provided.

Table 9-2. DS3 Performance Monitoring (PM) Modes

Mode	PM Option	Monitor P-Bits	Monitor F&M Bits	Monitor C-Bits	Correct P-Bits	Correct F&M Bits	Correct C-Bits	Monitor Line PM
VMR	P-Bit	Yes	No	No	Yes	No	No	Yes
VMR	F&M-bit	No	Yes	No	Yes	No	No	Yes
VMR	C-Bit	No	No	Yes	Yes	No	No	Yes
VM	P-Bit	Yes	No	No	No	No	No	Yes
VM	F&M-bit	No	Yes	No	No	No	No	Yes
VM	C-Bit	No	No	Yes	No	No	No	Yes
CC	P-Bit	No	No	No	No	No	No	Yes
CC	F&M-bit	No	No	No	No	No	No	Yes
CC	C-Bit	No	No	No	No	No	No	Yes

DS3 Line

CV-L Coding Violations

This parameter is a count of B3ZS bipolar violations (BPV) occurring over the accumulation period. BPVs that are part of the zero substitution code are excluded.

ES-L Errored Seconds

This parameter is a count of seconds containing one or more BPVs, or one or more LOS (from the DSX-3) defects.

SES-L Severely Errored Seconds

This parameter is a count of seconds during which BPVs exceed 44 or one or more LOS defects occur.

DS1 Line Parameters

ES-L Errored Seconds

This parameter is a count of seconds containing one or more bipolar violations (for both AMI and B8ZS types of coding), or one or more loss of signal defects from the DSX-1.

Performance Monitoring Data Storage and Reports

The DDM-2000 FiberReach Multiplexer can initialize the current registers through the CIT locally or remotely at any time, as well as report the contents of any register at any time. Refer to the **`init-pm`**, **`rtrv-pm-line`**, **`rtrv-pm-sect`**, **`rtrv-pm-sts1`**, **`rtrv-pm-t1`**, **`rtrv-pm-t3`** and **`rtrv-pm-tca`** commands in Chapter 11, "Commands and Reports."

Performance Monitoring During Failed Conditions

When the DDM-2000 FiberReach Multiplexer detects a trouble condition, the system stops accumulating affected performance parameters. Parameters that continue to provide useful information are accumulated during the trouble condition.

Performance Parameter Thresholds

The DDM-2000 FiberReach Multiplexer provides performance thresholds to alert maintenance staff of degraded transmission. Whenever the threshold for a parameter is exceeded, the DDM-2000 FiberReach Multiplexer generates a threshold-crossing alert (TCA) to alert the OS (via the TL1 interface) to the condition. A summary of all TCAs is available in the performance monitoring TCA summary report. Current quarter-hour and current day thresholds for each

parameter are provisionable, via the CIT, on a per shelf basis. Therefore, if values other than the defaults are to be used, only one value needs to be set for each parameter. Generation of TCAs can be disabled independently for each performance parameter. Performance data is still collected if thresholding is disabled. Refer to the **rtrv-pmthres-line**, **rtrv-pmthres-sect**, **rtrv-pmthres-sts1**,**set-pmthres-line**, **set-pmthres-sect**, **set-pmthres-sts1**, **rtrv-pm-tca**, **rtrv-pmthres-vt1**, **rtrv-pmthres-t1**, **rtrv-pmthres-t3**, **set-pmthres-vt1**, **set-pmthres-vt3** and **set-pmthres-t1** commands in Chapter 11, "Commands and Reports."

Threshold Crossings Reported to OS

To trigger proactive maintenance activity at the OS, threshold crossing alerts (TCAs) are reported via TL1 **REPT-EVT** autonomous messages.

Reports

This section provides information in reports available through the CIT. For reports available via the TL1 interface, refer to 824-102-151, DDM-*2000 Multiplexers Operations Systems Engineering Guide*.

Alarms and Status Report

The system provides a report that lists all active alarm and status conditions. The identity of the condition (circuit pack failure, incoming signal failure, etc.) is included in the report along with a time stamp indicating when the condition was detected.

See the **rtrv-alm** command in Chapter 11, "Commands and Reports," for a complete list of the alarm and status conditions that are reported by the system.

Provisioning Reports

Provisioning reports list the current state of all provisionable options in the system. See the **rtrv-attr-alm**, **rtrv-attr-cont**, **rtrv-attr-env**, **rtrv-crs-vt1**, **rtrv-crs-sts1**, **rtrv-crs-sts3c, rtrv-fecom**, **rtrv-lgn**, **rtrv-link**, **rtrv-ne**, **rtrv-oc1**, **rtrv-oc3**, **rtrv-pmthres-line**, **rtrv-pmthres-sect**, **rtrv-pmthres-sts1**, **rtrv-pmthres-t1**, **rtrv-pmthres-vt1**, **rtrv-secu**, **rtrv-state-equip**, **rtrv-state-path**, **rtrv-state-sts1**, **rtrv-sts1**, **rtrv-sync**, **rtrv-t1**, **rtrv-t3, rtrv-trace-sts1, rtrv-ulsdcc-l3, rtrv-ulsdcc-l4**, **rtrv-state-vt1** and **rtrv-vt1** commands in Chapter 11, "Commands and Reports."

Database Change Transmission to OS

All provisioning changes are automatically reported to the OS over the TL1 interface using **REPT DBCHG** autonomous messages.

Performance Monitoring Reports

TCA Summary Report

The TCA summary report lists the sum of the number of threshold crossings within the last 8 hours for quarter-hour thresholds and the number of threshold-crossings for the current day and current quarter hour. This snapshot provides an overall view of system performance. If there are TCAs identified, it identifies which performance status report to look at for a detailed view of those parameters. See the **rtrv-pm-tca** command in Chapter 11, "Commands and Reports."

Performance Status Reports

The system provides reports that contain a snapshot of all current and previous performance monitoring registers. The time at which registers were last reinitialized is included. The option to display a specified subset of parameters (for example, line parameters only, data for only one OC-1 line or DS1 port, etc.) is also provided. See the **rtrv-pm-sect**, **rtrv-pm-line**, **rtrv-pm-sts1**, **rtrv-pm-vt1**, **rtrv-pm-t1**, and **rtrv-pm-t3** commands in Chapter 11, "Commands and Reports."

Maintenance History Report

A maintenance history report containing the past 500 alarm, status, and CIT (for example, provisioning, loopback request, manual protection, etc.) events is provided. This summary contains real time and date stamps indicating when each condition was detected and when it cleared; CIT events contain a time stamp indicating when the command was entered. Alarm and status entries in the retrieve history report are not subject to holdoff and clear delay. See the **rtrv-hsty** command in Chapter 11, "Commands and Reports."

State Report

The state report lists the state of all slots and low-speed ports on the system. DS1 ports can be in the AUTO (available for automatic provisioning), IS (in service), or NMON (not monitored) states. When a good signal from the DSX is detected, a port in the AUTO state automatically transitions to the IS state and is monitored for failures. When a port is in the NMON state, the signal coming from the DSX is not

monitored. This report also includes the protection switching state ("active" or "standby") and protection switching priority of all protected lines and equipment in the system. See the **`rtrv-state`-(t1, sts1, vt1)** command in Chapter 11, "Commands and Reports."

Path State Report

This report lists each VT1.5 active and standby path in a path switched ring configuration. The active paths are identified and the protection switching status of each path is provided. See the **`rtrv-state-(t1,sts1,vt1)`** command in Chapter 11, "Commands and Reports."

Equipment Report

This report displays the equipage and version information for one or more slots. Refer to the **`rtrv-eqpt`** command in Chapter 11, "Commands and Reports."

Network Map Reports

The network report lists the TIDs and NSAPs of all reachable NEs (including level 2 ISs) in the local area only, or all reachable level 2 IS NEs in the subnetwork (if the local NE is provisioned to be a level 2 IS). Refer to the **`rtrv-map-network`** command in Section 11, "Commands and Reports."

Technical Specifications

10

Contents

Overview 10-1

DDM-2000 FiberReach Multiplexer Wideband Shelf Specifications 10-1

- External Transmission Interfaces 10-1
- Electrical Interfaces 10-2
  - DS1 Low-Speed (BBF1B) 10-2
  - DS1PM Low-Speed (BBF3/BBF3B) 10-3
  - DS3 Low-Speed (BBG4/BBG4B) 10-5
  - DS3 Data Services Interface (BBG19) 10-7
  - T1 Carrier Low-Speed (BBF6 T1EXT) 10-8
  - HDSL Interface (BBF8) 10-11
- Optical Interfaces 10-12
  - Lightguide Jumpers 10-12
  - Intra-office (IS-3) OC-3 Rate Interface (22D-U OLIUs) 10-13
  - Intermediate Reach OC-3 Interface (22F/22F-U/22F2-U OLIU) 10-17
  - Long Reach OC-3 Interface (22G-U/22G2-U/ 22G3-U/22G4-U OLIU) 10-18
  - Long Reach OC-1 Interface (26G2-U OLIU) 10-22
  - Long Reach OC-3 Interface (28G-U/28G2-U OLIU) 10-27
  - Long Reach OC-12 Interface (29G-U OLIU) 10-31
  - Long Reach OC-12 Interface (29H-U OLIU) 10-32
  - OC-3 Optical Interface Mixing 10-36
- Plug-In Maintenance Sparing Guidelines 10-39
- Universal Optical Connectors 10-42

Contents

- SONET Overhead Bytes 10-44
- Performance 10-44
  - Wander/Jitter 10-44
  - Signal Performance 10-44
  - Protection Switching 10-45
  - Transient Performance 10-46
  - Delay 10-46
  - Performance Monitoring 10-47
- Signaling Mode 10-49
- Digital Data Performance 10-49
- Operations Interfaces 10-49
  - Craft Interface Terminal 10-49
  - Personal Computer Specifications for Software Download 10-50
  - Compatible Modems 10-51
  - CPro-2000 Graphical User Interface and Provisioning Tool 10-51
  - User Panel 10-52
  - Equipment Indicators 10-52
  - Office Alarms 10-53
  - User-Definable Miscellaneous Discrete Environmental Alarms and Controls 10-53
  - TL1/X.25 Interface 10-53
  - Lucent 2000 Product Family OI Specifications 10-53
- Physical Specifications 10-54
  - Wideband Shelf Physical Characteristics 10-54
  - Network Bay and Cabinet Mounting 10-54
- Environmental Specifications 10-55
  - Temperature and Humidity 10-55
  - EMC Requirements 10-55
  - Earthquake Requirements 10-55
  - Fire Resistance 10-55
  - Underwriters Laboratories (UL) 10-56
  - Canadian Standards Association 10-56
- Power Requirements 10-56

Contents

Shelf Fuses 10-56
Power Dissipation 10-56
- DDM-2000 FiberReach Multiplexer Reliability 10-59
  - Summary 10-59
  - Transmission Availability 10-59
  - Operation System Interface Availability 10-60
  - Optical Module Maintenance Objective 10-60
  - Infant Mortality 10-60
  - DDM-2000 FiberReach System Reliability Predictions 10-61

DDM-2000 Narrowband Shelf Specifications 10-64
- Physical Specifications 10-64
  - Narrowband Shelf Physical Characteristics 10-64
- Power Requirements 10-64
  - Shelf Fuses 10-64
  - Power Dissipation 10-64
- Terminal-to-Terminal Voice-Frequency Transmission 10-65

Contents

Technical Specifications

10

Overview

This section contains the technical specifications for Releases 2.2, 3.0, 3.1, and 4.0 of the DDM-2000 FiberReach Multiplexer.

DDM-2000 FiberReach Multiplexer Wideband Shelf Specifications

External Transmission Interfaces

The DDM-2000 FiberReach Multiplexer transmission interfaces adhere to industry standards as listed in Table 10-1.

Table 10-1. Transmission Interface Standards

Interface	Standard	Comments
DS1 low-speed	CB-119, *ANSI** T1.102-1993 TR-499, Iss. 5, *ANSI* T1.403-1989	B8ZS/AMI option SF, ESF
DS3 low-speed	CB-119, *ANSI* T1.102-1998, TR-499, Iss. 5	VMR, VM, or clear channel
OC-1/OC-3/ OC-12	*ANSI* T1.106/88, *ANSI* T1.105/95, T1.105.03/94, & T1.105.02/95 GR-253, Iss. 2, GR-496, Iss. 2	

* Registered trademark of American National Standards Institute, Inc.

Electrical Interfaces

The DDM-2000 OC-3 Multiplexer supports a DS1, DS1PM, DS3, and T1 Carrier low-speed interfaces, and DS3 Data Services and HDSL interfaces.

DS1 Low-Speed (BBF1B)

- Electrical Specification

  The DS1 low-speed interface transmits and receives a standard electrical DS1 signal as specified in *ANSI* T1.102-1993, Section 2 (1.544 Mb/s nominal rate, DSX-1 interconnect specification). Line coding is provisionable to alternate mark inversion (AMI) with or without bipolar 8-zero substitution (B8ZS). Line buildout is provisionable as follows:

  — 613C (22 gauge): 30 to 655 ft.

  — 1249-C (26 gauge) 30 to 450 ft.

- Format Specification

  The DS1 low-speed interface provides clear channel transport of any DSX-1 compatible signal. There are no format constraints on this interface.

- Alarm Thresholding

  The following parameters are monitored at the DS1 interface:

  — Loss of signal (LOS)

  — Line coding violations (CV-L).

  The alarm level for each of the monitored parameters can be provisioned to critical (CR), major (MJ), minor (MN), or status. B8ZS and AMI coding violation failure thresholds are user settable to 10^{-3}, 10^{-6}, 10^{-7}, or 10^{-8} bit error ratio (BER).

DS1PM Low-Speed (BBF3/BBF3B)

- Electrical Specification

  The DS1PM low-speed interface transmits and receives a standard electrical DS1 signal as specified in ANSI T1.102-1993, Section 2 (1.544 Mb/s nominal rate, DSX-1 interconnect specification). Line coding is provisionable to AMI with or without B8ZS. Line buildout is provisionable as follows:

  — 613C (22 gauge): 30 to 655 ft.

  — 1249-C (26 gauge): 30 to 450 ft.

- Format Specification

  The DS1PM low-speed interface can be provisioned for the following DS1 formats: clear channel (default), superframe (SF) as specified in ANSI T1.403-1989, or extended superframe (ESF) as specified in ANSI T1.403-1989. In the case of SF or ESF format selections, DS1 performance information is collected by monitoring the associated DS1 framing format.

- Alarm Thresholding

  The following parameters are monitored at the DS1PM interface:

  — Loss of signal (LOS)

  — Line coding violations (CV-L).

  The alarm level for each of the monitored parameters can be provisioned to CR, MJ, MN, or status. B8ZS and AMI coding violation failure thresholds are user settable to 10^{-3}, 10^{-6}, 10^{-7}, or 10^{-8} BER.

- Loopback

  — Quad DS1 facility loopback (BBF3)

  — Single DS1 facility loopback (BBF3B) (Release 3.0 and later).

- Performance Monitoring (See Table 10-3 and Table 10-23.)

  Near-End DS1 Path Parameters:

  — Errored Seconds (ES)

  — Severely Errored Second (SES)

  — Unavailable Seconds (UAS)

  — SF or ESF framed signals incoming to the DSX-1

  — CV-P Coding Violations (Release 3.0 and later)

  — CV-PFE Coding Violations (Release 3.0 and later).

Far-End DS1 Path Parameters:

— SES, and UAS for ESF framed signals using performance reportant messages (PRM) incoming from the DSX-1.

DS1 Line Parameters:

— ES-L Errored Seconds (Release 3.0 and later).

DS3 Low-Speed (BBG4/BBG4B)

- Electrical Specification

  The low-speed DS3 interface transmits/receives a standard electrical DS3 signal as specified in *ANSI* T1.102-1993, Section 5 (44.736 Mb/s rate, DSX-3 interconnect specification, B3ZS encoding). However, the signal does not have to contain a standard DS3 frame.

  LBO is provisionable as follows:

  — 734A/D: 0 to 450 ft.

  — Mini-coax (KS-19224, L2): 0 to 150 ft.

  — 735A: 0 to 250 ft.

- Format Specification

  The DS3 low-speed interface provides clear channel transport of any DSX-3 compatible signal (M13 mode, framed clear channel, unframed clear channel). Thus, there are no format requirements on this interface.

- Alarm Thresholding

  The following parameters are monitored at the DS3 interface to the DSX-3:

  — Loss of Signal (LOS)

  — Line coding violations (CV-L).

  The alarm level for each of the monitored parameters can be provisioned to CR, MJ, MN, or status. B3ZS coding violation failure threshold is user settable to 10^{-3} or 10^{-6} BER.

- PM (see Table 10-3 and Table 10-23)

  — DS3 parity errors (P-Bits)

  — Severely errored frame seconds (SEFS).

  If provisioned in the violation monitor and removal (VMR) or violation monitor (VM) modes (Table 10-2), DS3 P-bit violations and SESF are counted, and the counts are thresholded to flag detected performance degradation of the DS3 signal incoming from the fiber.

Table 10-2. DS3 Interface Modes

Mode	Monitor P-Bits	Correct P-Bits
VMR mode	Yes	Yes
VM mode	Yes	No
CC mode	No	No

- Enhanced DS3 PM (See Table 10-3 and Table 10-23.)
  - CV-P Coding Violations

    These errors are counted and thresholded independently for all DS3 interfaces provisioned in VM or VMR mode. When the F&M bit or C-bit option (C-bit is OC-3 Multiplexer Release 8.0 and later releases) is selected, NEs could be provisioned in VMR or VM mode. See Table 10-3.
  - Errored Seconds (ES-P)
  - Severely Errored Seconds (SES-P)
  - Unavailable Seconds (UAS-P)
  - Severely Errored Frame Seconds (SEFS)
  - CV-L Coding Violations Line (Release 7.2 and later of OC-3)
  - ES-L Errored Seconds (Release 7.2 and later of OC-3)
  - SES-L Severely Errored Seconds Line (Release 7.2 and later of OC-3)

Table 10-3. Enhanced DS3 Performance Monitoring Modes

Mode	PM Option	Monitor P-Bits	Monitor F&M Bits	Monitor C-Bits	Correct P-Bits	Correct F&M Bits	Correct C-Bits	Monitor Line PM
VMR	P-bit	Yes	No	No	Yes	No	No	Yes
VMR	F&M-bit	No	Yes	No	Yes	No	No	Yes
VMR	C-bit	No	No	Yes	Yes	No	No	Yes
VM	P-bit	Yes	No	No	No	No	No	Yes
VM	F&M-bit	No	Yes	No	No	No	No	Yes
VM	C-bit	No	No	Yes	No	No	No	Yes
CC	P-bit	No	No	No	No	No	No	Yes
CC	F&M-bit	No	No	No	No	No	No	Yes
CC	C-bit	No	No	No	No	No	No	Yes

DS3 Data Services Interface (BBG19)

- Electrical Specification

  The low-speed DS3 interface transmits and receives a standard electrical DS3 signal as specified in *ANSI* T1.102-1993, Section 5 (44.736 Mb/s rate, DSX-3 interconnect specification, bipolar 3-zero substitution [B3ZS] encoding). However, the signal does not have to contain a standard DS3 frame.

  LBO is provisionable as follows:

  — 734A/D: 0 to 450 ft.

  — Mini-coax (KS-19224, L2): 0 to 150 ft.

  — 735A: 0 to 250 ft.

- Format Specification

  The DS3 low-speed interface provides clear channel transport of any DSX-3 compatible signal (M13 mode, framed clear channel, unframed clear channel). Thus, there are no format requirements on this interface.

- Alarm Thresholding

  The following parameters are monitored at the DS3 interface to the DSX-3:

  — LOS

  — CV-L.

  The alarm level for each of the monitored parameters can be provisioned to CR, MJ, MN, or status. B3ZS coding violation failure threshold is user settable to 10^{-3} or 10^{-6} BER.

- Performance Monitoring (See Table 10-3 and Table 10-23.)

  — DS3 parity errors (P-Bits)

  — SEFS.

  If provisioned in the VMR or VM modes (Table 10-2), DS3 P-bit violations and SESF are counted, and the counts are thresholded to flag detected performance degradation of the DS3 signal incoming from the fiber.

- Enhanced DS3 Performance Monitoring (See Table 10-23 and Table 10-3.)

  The Enhanced DS3 PM for the BBG19 is the same as for the BBG4/ BBG4B. Refer to the DS3 Low-Speed (BBG4/4B) Enhanced DS3 Performance Monitoring section for a list of parameters.

  The DS3 interface is accessed through a BNC connector on the circuit pack faceplate.

T1 Carrier Low-Speed (BBF6 T1EXT)

- Electrical Specification

The T1 carrier low-speed interface (T1EXT) transmits and receives a standard electrical T1 carrier signal as specified in CB No. 113, Issue 2, April 1978. The T1EXT supports two interfaces. Line coding is provisionable to AMI with or without B8ZS. The following are specifications for the driver/receiver:

— Driver Output: 3 V peak pulse

— Receiver Gain: 35 dB maximum at 772 KH

— Receiver Dynamic Range: 0 to 35 dB (no pad at input).

The driver/receiver does not require any special provisioning to support up to 6,000 feet of 22-gauge copper cable (at 22 degrees Celsius) used in a T-Carrier system.

The T1EXT will support a single span of the following distances:

— In a central office: up to 3000 feet (±1500 feet)

— In an outside plant cabinet or Wall DT: up to 6,000 feet.

The 60 mA constant current regulator will support a simplex loop resistance of 221 ohms.

— The T1EXT does not support fault locating using bipolar violations.

— The T1EXT can interface with "looping regulator" type repeaters only.

— The T1EXT does not have the capability to loop the simplex current back to a T1 line repeater.

— The T1EXT does not include any components for primary or secondary lightning protection/surge protection or power cross. Primary protection (Lucent Technologies' protector unit 4B3EW or equivalent) is always required for tip/ring lines exposed to lightning and surges either in cabinet or as lines enter a building. An external secondary lightning and surge protection assembly (ED-8C783) must be collocated with the FiberReach shelf for all outside plant applications. Refer to Figure 10-1 for T1EXT span powering.

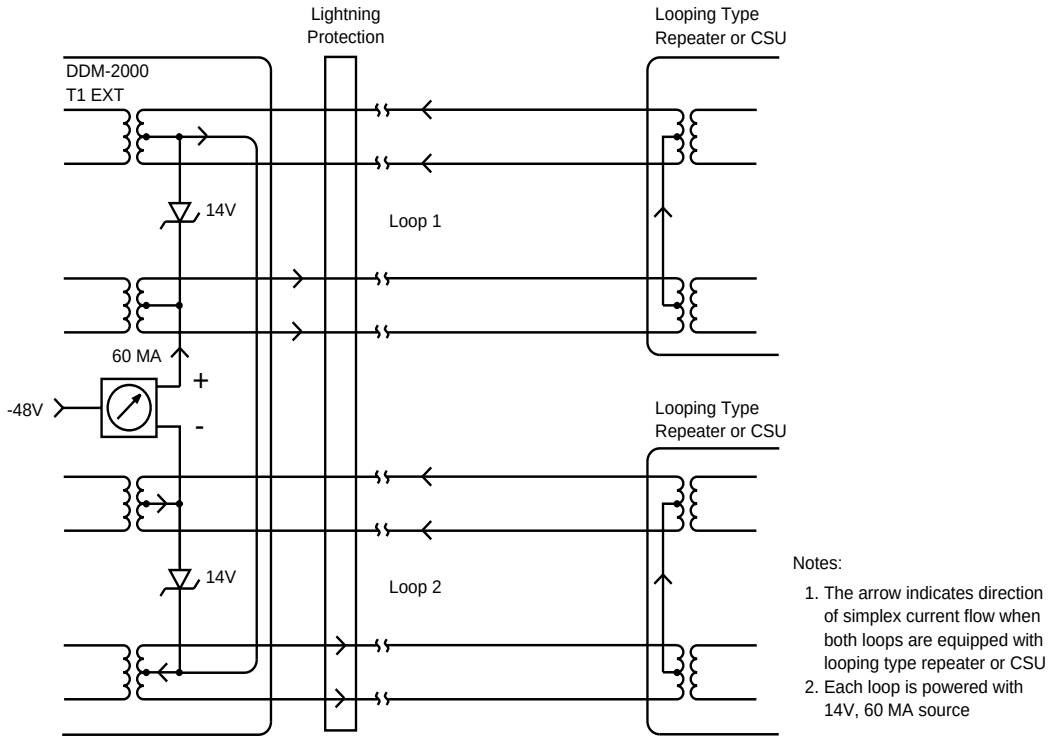

Figure 10-1. T1EXT Span Powering

- Format Specification

  The T1EXT BBF6 low-speed interface can be provisioned for the following formats: clear channel (default), SF as specified in ANSI T1.403-1989, or ESF as specified in ANSI T1.403-1989. In the case of SF or ESF format selections, T1EXT performance information is collected by monitoring the associated T1EXT framing format.

- Alarm Thresholding

  The following parameters are monitored at the T1EXT interface:

  — Loss of signal

  — Line coding violations.

  The alarm level for each of the monitored parameters can be provisioned to CR, MJ, MN, or status. B8ZS and AMI coding violation failure thresholds are user settable to 10^{-7} or 10^{-8} BER.

- Performance Monitoring (PM) (See Table 10-3 and Table 10-23.)

  — Near-end T1EXT path parameters (ES, SES, and UAS) for SF or ESF framed signals incoming to the DSX-1

  — Far-end T1EXT path parameters (ES, SES, and UAS) for ESF framed signals using performance report messages (PRM) incoming from the DSX-1

  — Coding violations (CV) for near-end and far-end

  — T1EXT line PM monitoring and ES reporting

Refer to 363-206-300, *DDM-2000 FiberReach Multiplexer Applications, Planning, and Ordering Guide*, Chapter 6, "System Planning and Engineering," for specific engineering rules regarding T1EXT lines.

HDSL Interface (BBF8)

- Electrical Specification

  The High Bit-rate Digital Subscriber Line (HDSL) circuit pack transmits and receives a 2B1Q signal as specified in Telcordia Technologies TA-NWT-001210.

  — Data is scrambled/descrambled with a pseudo-random sequence.

  — Line buildout is automatically provisioned.

  — Compensated for data inversion caused by tip-ring reversals.

- Format Specification

  The HDSL allows for clear channel transport of a framed or unframed DS1. Its data stream consists of two 78 Kb/s signals transported on separate wire pairs. Together, the aggregate bi-directional bit rate is 1.554 MB/s. The remaining 24 Kb/s is used for training and diagnostic information.

  — Compatible with *PairGain** equipment.

- Alarm reporting

  — LOS.

  An LOS is reported if either HDSL line experiences a synchronization failure.

- Loopback

  DS1 facility loopback for each HDSL interface.

- Performance Monitoring (PM) — Available through the HDSL link management port only

  — User-configurable alarm thresholds

  — 15-minute, 24-hour, and 7-day performance histories

  — Asynchronous serial interface for provisioning and PM.

- Management

  — SONET Management.

  This link is accessible via the SONET DCC and DDM-2000 CIT. It allows the HDSL circuit pack to be provisioned for DS1 facility loopbacks.

  — HDSL Link Management.

  This link is accessible via a faceplate mounted RS-232 interface. It allows management of each HDSL port only. Management of the DDM-2000 is not accessible through this interface. This management port supports a menu driven interface for each HDSL port. Managed features include:

---

* *PairGain* is a registered trademark of PairGain Technologies, Inc.

- — PM features listed above
- — Local and remote loopbacks
- — Programmable loopback time-out
- — Alarm status.

■ Described in *PairGain* Specifications, OEM-HMO-SW1-02

Optical Interfaces

The DDM-2000 FiberReach Multiplexer supports either an OC-1 or OC-3 high-speed interface that is synchronous optical network (SONET) compliant. When equipped with the 26G2-U OLIU, the companion OLIU at the host node is the 27G-U OLIU. The nominal OC-1 rate is 51.84 Mb/s for these OLIUs. When equipped with the 28-type OLIU, the OLIU on the neighboring DDM-2000 OC-3 shelf may be any 22-type OLIU, or 21-type on an OC-12 shelf.

Lightguide Jumpers

The DDM-2000 FiberReach Multiplexer provides Lucent's universal optical connector on the OLIU. The universal optical connectors are receptacles on the faceplate of the OLIU that allow a single OLIU to support either ST, FC-P, or SC connectors as needed. Both 0 dB and attenuating buildouts are supported.

The DDM-2000 OC-1/OC-3 lightguide interface uses single-mode and multimode jumpers for connecting to and from the outside plant *LGX*® panel and the DDM-2000 OC-3.

When the outside plant lightguide is single-mode, a single-mode jumper must be used for the transmit side and either single-mode or multimode jumpers can be used for the receive side of all OLIUs (except the 29-type which requires single-mode fiber on both the transmit and receive sides due to potential optical path degradations).

The 29-type OLIU must be used with single mode fiber.

Lightguide jumpers can be ordered from Lucent. See the appropriate "Miscellaneous Equipment and Tools" section for ordering information in the 363-206-300, *DDM-2000 FiberReach Multiplexer Applications, Planning, and Ordering Guide*.

Intra-office (IS-3) OC-3 Rate Interface (22D-U OLIUs)

- Optical Specification

  The 22D-U OLIUs are short-reach optical interfaces used to interconnect between the DDM-2000 OC-3 and OC-12 Multiplexers. The nominal line rate is 155.520 Mb/s. The LED transmitter supplies an NRZ-coded signal.

  Table 10-4, Table 10-5, and Table 10-8 provide detailed specifications and link budget information for the 22D-U OLIUs.

- Alarm Thresholding

  The following parameters are monitored at the OC-3 interface:

  — LOS
  — LOF
  — LOP
  — Line AIS
  — B2 thresholding signal fail
  — B2 thresholding signal degrade. (B2 signal degrade thresholds are user settable in the range from 10^{-5} to 10^{-9} BER.)

- Line PM (See Table 10-3 and Table 10-23.)

  — Section SEFS
  — B2 parameters
  — STS-1 Path PM. (See Table 10-3 and Table 10-23.)

Table 10-4 lists the 22D-U OLIU specifications.

Table 10-4. 22D-U OLIU Specifications

System Information:	**22D-U**
Terminal Equipment Identification Optical Line Rate (Mb/s) Optical Line Coding Optical Wavelength Performance	22D-U OLIU 155.520 Mb/s Scrambled NRZ 1310 nm Not applicable
Transmitter Information:	
Optical Device Temperature Controller FDA Classification Optical Source Faceplate Optical Connector	No TEC Class I LED Lucent ST UOC buildout assembly * Multimode
Receiver Information:	
Optical Device Temperature Controller Optical Detector Faceplate Optical Connector	None InGaAsP PIN UOC buildout assembly * Multimode

* The universal optical connector (UOC) buildout assembly consists of a faceplate-mounted block assembly and either 0 dB, 5 dB, 10 dB, or 15 dB buildout in either ST, SC, or FC-type connectors.

Table 10-5. 22D-U OLIU Link Budgets (Note 1)

Parameter	22D-U
Minimum Wavelength (λ_{Tmin})	1270/1260* nm
Maximum Wavelength (λ_{Tmax})	1380 nm
Spectral Width ($\delta\lambda_{rms}$)	170 nm †
Maximum Transmitter Power (P_{Tmax})	–14.0 dBm
Minimum Transmitter Power (P_{Tmin})	-18.8/-21.8 dBm
Maximum Received Power (P_{Rmax})	–14.0 dBm
Minimum Received Power (P_{Rmin})	-33.8/-31.8* dBm
Minimum System Gain (S-R)‡	15/10.0* dB
Optical Path Penalty (P_O) §	1.6 dB
Connector Loss ¶	1.5 dB
Unallocated Margin **	2.0 dB
Minimum Loss Budget	0.0 dB
Maximum Loss Budget ††	9.9/4.9* dB
Maximum Span Length ‡‡	(Note 2)

Notes:

1. All terminology is consistent with TR-253, Issue 2. All specifications for the 22D OLIU meet or exceed intermediate reach (IR) values described in GR-253, Iss. 2.
2. Multimode only (See Table 10-8.).

* When two numbers are given, the number before the slash is the specification for operating under controlled environmental conditions. The number following the slash is the specification for uncontrolled environmental conditions. If only one number is given, it applies to both controlled and uncontrolled environmental conditions.

† Full width at half maximum (FWHM) spectral width.

‡ The minimum system gain for the DDM-2000 already takes into account aging, temperature, and manufacturing tolerances as these figures are built into the minimum transmitter power. The DDM-2000 system gain can, thus, not be directly compared with the DDM-1000 system gain because the DDM-1000 system gain does not include all of these effects. A similar penalty, called eye margin, is subtracted from the DDM-1000 loss budget after the value of system gain is determined.

§ Optical path penalty includes effects of dispersion, reflection, and jitter that occur on the optical path.

¶ One connector (0.75 dB) on each end is assumed to connect station cable to outside plant.

** Unallocated margin, or safety margin, is typically specified from 0 dB to 3 dB.

†† Budget available for both station and transmission cable and splices.

‡‡ Attenuation and dispersion can be the limiting factors in span length. For OC-3 single-mode fiber systems, dispersion is not a factor and all applications are attenuation limited. The limits must be calculated based on both factors and the lesser of the two defines the actual maximum span length. A rough rule of thumb for attenuation-limited systems is 0.45 dB/km. This estimate includes typical cable loss (0.4 dB/km) and splice loss (0.2 dB per splice, 11 total splices) associated with single-mode fiber.

Maximum span length can be calculated more precisely based on particular fiber and splice characteristics and local engineering rules.

Intermediate Reach OC-3 Interface (22F/22F-U/ 22F2-U OLIU)

- Optical Specification

  The 22F/22F-U/22F2-U OLIU photonics meet or exceed SONET intermediate reach specifications (TR 253-IR-1 MLM category). The MLM* laser transmitter supplies an NRZ-coded signal. The PINFET receiver allows direct optical loopback without the use of an external attenuator.

  The 22F/22F-U/22F2-U OLIU intermediate reach OC-3 interface supports span lengths up to 33 km, assuming 0.45 dB/km single-mode fiber and the span engineering rules outlined in Table 10-7. Transmit and receive powers are referenced to Points S and R as shown in Figure 10-2. Table 10-6, Table 10-7, and Table 10-8 provide detailed specifications and link budget information for the 22F-type OLIU.

- Alarm Thresholding

  The following parameters are monitored at the OC-3 interface.

  — LOS

  — LOF

  — LOP

  — Line AIS

  — B2 thresholding signal fail

  — B2 thresholding signal degrade. (B2 signal degrade thresholds are user settable in the range from 10^{-5} to 10^{-9} BER.)

- Line PM (See Table 10-3 and Table 10-23.)

  — Section SEFS

  — Line parameter B2

  — STS pointer justification (OC-3 R11.0 and later)

  — STS-1 Path PM. (See Table 10-3 and Table 10-23.)

* A higher quality SLM laser may be used instead of an MLM laser.

Long Reach OC-3 Interface (22G-U/22G2-U/ 22G3-U/22G4-U OLIU)

- Optical Specification

  The multilongitudinal mode (MLM*) laser transmitter supplies an NRZ-coded signal. For direct optical loopbacks, at least 7.0 dB (use 10 dB attenuator, see Table 10-21) of attenuation is needed for the 22G-U. No attenuation is needed for the 22G2-U/22G3-U/22G4-U.

  The 22G-U/22G2-U OLIU long reach OC-3 interface supports span lengths up to 51 km, assuming 0.45 dB/km single-mode fiber and the span engineering rules outlined in Table 10-7. Transmit and receive powers are referenced to Points S and R (Figure 10-2). Table 10-6, Table 10-7, and Table 10-8 provide detailed specifications and link budget information for the 22G-U/22G2-U OLIU.

  The 22G3-U/22G4-U OLIU is a SONET compliant long reach OC-3 interface supporting span lengths up to 55 km, assuming 0.45 dB/km single-mode fiber and the span engineering rules outlined in Table 10-7. Transmit and receive powers are referenced to Points S and R (Figure 10-2). Table 10-6, Table 10-7, and Table 10-8 provide detailed specifications and link budget information for the 22G3-U/22G4-U OLIU.

- Alarm Thresholding

  The following parameters are monitored at the OC-3 interface.

  — Loss of signal (LOS)

  — Loss of frame (LOF)

  — Loss of pointer (LOP)

  — Line AIS

  — B2 thresholding signal fail

  — B2 thresholding signal degrade. (B2 signal degrade thresholds are user settable in the range from 10^{-5} to 10^{-9} BER.)

- Line PM (See Table 10-3 and Table 10-23.)

  — Section SEFS

  — Line parameter B2

  — STS pointer justifications (OC-3 R11.0 and later)

  — STS-1 Path PM. (See Table 10-3 and Table 10-23.)

* A higher quality SLM laser may be used instead of an MLM laser.

Table 10-6 lists the 22F-type and 22G-type OLIU specifications.

Table 10-6. 22F-Type and 22G-Type OLIU Specifications

System Information:	**22F-Type**	**22G-U/22G2-U**	**22G3-U/22G4-U**
Terminal Equipment Identification Optical Line Rate (Mb/s) Optical Line Coding Optical Wavelength Performance	22F/22F-U/22F2-U OLIU 155.520 Mb/s Scrambled NRZ 1310 nm SONET IR-1 MLM (Intermediate Reach)	22G-U/22G2-U OLIU 155.520 Mb/s Scrambled NRZ 1310 nm Not applicable	22G3-U OLIU 155.520 Mb/s Scrambled NRZ 1310 nm SONET LR- (Long Reach)
Transmitter Information:			
Optical Device Temperature Controller FDA Classification Optical Source Faceplate Optical Connector	No TEC Class I InGaAsP Laser, MLM Structure * Lucent C3000-A-2 (22F) UOC buildout assembly † (22F-U/22F2-U) Single Mode	No TEC Class I InGaAsP Laser, MLM Structure * UOC buildout assembly † Single Mode	No TEC Class I InGaAsP Laser, MLM Structure * UOC buildout assembly † Single Mode
Receiver Information:			
Optical Device Temperature Controller Optical Detector Faceplate Optical Connector	None InGaAsP PIN Lucent C2000-A-2 (22F) UOC buildout assembly † (22F-U/22F2-U) Multimode	None InGaAsP PIN (22G-U) InGaAs PIN (22G2-U) UOC buildout assembly † Multimode	None InGaAs PIN UOC buildout assembly † Multimode

Notes:

* A tighter specification DFB laser (part #1243TAFA) may be supplied instead of the MLM laser. The DFB laser meets all the requirements of the MLM laser and DFB requirements in GR-253-CORE, Issue 2, December 1995.

† The universal optical connector (UOC) buildout assembly consists of a faceplate-mounted block assembly and either 0 dB, 5 dB, 10 dB, or 15 dB buildout in either ST, SC, or FC-type connectors. ST universal buildout does not apply to 22G-U.

Table 10-7. 22F-Type and 22G-Type OLIU Link Budgets

Parameter	22F/22F-U/ 22F2-U	22G-U	22G2-U	22G3-U*	22G4-U***
Minimum Wavelength (λ_{Tmin})	1260 nm	1272 nm	1272 nm	1280 nm	1280 nm
Maximum Wavelength (λ_{Tmax})	1360 nm	1350 nm	1350 nm	1335 nm	1335 nm
Spectral Width ($\delta\lambda_{rms}$)	7.7 nm	3.0 nm	3.0 nm	4.0 nm	1.0 nm
Maximum Transmitter Power † (P_{Tmax})	–8.0 dBm	0.0 dBm	0.0 dBm	0.0 dBm	0.0 dBm
Minimum Transmitter Power (P_{Tmin})	–15.0 dBm	–7.0 dBm	–7.0 dBm	–5.0 dBm	–5.0 dBm
Maximum Received Power† (P_{Rmax})	–7.0 dBm	–7.0 dBm	0.0 dBm	0.0 dBm	0.0 dBm
Minimum Received Power (P_{Rmin})	–34.0 dBm	–34.0 dBm	–34.0 dBm	–34.0 dBm	–34.0 dBm
Minimum System Gain (S-R)‡	19.0 dB	27.0 dBm	27.0 dBm	29.0 dBm	29.0 dBm
Optical Path Penalty (P_O) §	1.0 dB	1.0 dBm	1.0 dBm	1.0 dBm	1.0 dBm
Connector Loss ¶	1.5 dB	1.5 dBm	1.5 dBm	1.5 dBm	1.5 dBm
Unallocated Margin **	1.5 dB	1.5 dBm	1.5 dBm	1.5 dBm	1.5 dBm
Minimum Loss Budget	0.0 dB	7.0 dBm	0.0 dBm	0.0 dBm	0.0 dBm
Maximum Loss Budget ‡‡	15.0 dB	23.0 dBm	23.0 dBm	25.0 dBm	25.0 dBm
Maximum Span Length §§	33 km	51 km	51 km	55 km	55 km

Notes:

1. All terminology is consistent with GR-253, Issue 2. All specifications for the 22F OLIU meet or exceeds intermediate reach (IR) values described in GR-253, Iss. 2.

* The 22G3-U OLIU is fully compliant with SONET long reach applications. It is fully compatible with the 22F-type, 22G-U, and 22G2-U OLIUs and will replace them. Also see footnote ***.

† Transmit and receive powers are referenced to points S and R.

‡ The minimum system gain for the DDM-2000 already takes into account aging, temperature, and manufacturing tolerances as these figures are built into the minimum transmitter power. The DDM-2000 system gain can, thus, not be directly compared with the DDM-1000 system gain because the DDM-1000 system gain does not include all of these effects. A similar penalty, called eye margin, is subtracted from the DDM-1000 loss budget after the value of system gain is determined.

§ Optical path penalty includes effects of dispersion, reflection and jitter that occur on the optical path.

¶ One connector (0.75 dB) on each end is assumed to connect station cable to outside plant.

** Unallocated margin, or safety margin, is typically specified from 0 dB to 3 dB.

‡‡ Budget available for both station and transmission cable and splices.

§§ Attenuation and dispersion can be the limiting factors in span length. For OC-3 single-mode fiber systems, dispersion is not a factor and all applications are attenuation limited. For OC-12 systems, the maximum distance could be either attenuation limited or dispersion limited. The limits must be calculated based on both factors and the lesser of the two defines the actual maximum span length. A rough rule of thumb for attenuation-limited systems is 0.45 dB/km. This estimate includes typical cable loss (0.4 dB/km) and splice loss (0.2 dB per splice, 11 total splices) associated with single-mode fiber.

Maximum span length can be calculated more precisely based on particular fiber and splice characteristics and local engineering rules.

*** The 22G4-U OLIU is fully compliant with SONET Long Reach applications. The 22G4-U will replace the 22F-type and the 22G-U/22G2-U/22G3-U OLIUs.

Table 10-8. OC-3 OLIU Link Budget - Multimode Operation

	Maximum Span Length (km)	Maximum Span Length (km)	Maximum Span Length (km)
Fiber Bandwidth	**22D-U (Note 1)**	**22F/22F-U/22F2-U (Note 2)**	**22G-U/22G2-U/22G3-U/22G4-U (Note 3)**
1000 MHz-km	3.6/3.4	6.5	6.5
800 MHz-km	3.4/3.3	5.1	5.1
500 MHz-km	2.7	3.1	3.1
300 MHz-km	1.9	1.8	1.8

Notes:

1. When two numbers are given, the number before the slash is the specification for operating under controlled environmental conditions. The number following the slash is the specification for uncontrolled environmental conditions. If only one number is given, it applies to both controlled and uncontrolled environmental conditions.
2. Maximum 22F-type MM Link Budget (dB) for multimode operation is 12.0 dB.
3. The 22G4-U will replace the 22F-type and the 22G-U/22G2-U/22G3-U OLIUs.

The system is dispersion limited for all the fiber bandwidths listed in Table 10-8.

Multimode fiber operation on the DDM-2000 OC-3 Multiplexer requires a minimum exit bandwidth of 120 MHz to ensure that dispersion loss is kept below acceptable levels. If the fiber is already installed and the exit bandwidth is measured to be 120 MHz or greater, then the maximum link budget values (see Note 2) can be used to determine if the loss budget is sufficient for that fiber.

If planning a new fiber installation, the values at the end of the table, given for a number of commercially available fiber bandwidth-distance products, can be used. Fiber distances are calculated using the 120 MHz exit bandwidth limit; however, actual exit bandwidths may be higher for these distances due to the existence of splices. This may permit longer span lengths to be achieved, for the given fiber bandwidths, than those specified in the table. In this case, however, the span length can only be increased to the point where the system is loss limited as specified by the maximum multimode link budget given in the table (1 dB/km cable is assumed).

Long Reach OC-1 Interface (26G2-U OLIU)

- Optical Specification

  The multilongitudinal mode laser transmitter supplies a non-return to zero (NRZ)-coded signal. For direct optical loopbacks, at least 7.0 dB (use 10 dB of attenuation) is needed for the 26-type.

  The 26-type OLIU long reach OC-1 interfaces support span lengths up to 44 km, assuming 0.45 dB/km single-mode fiber and the span engineering rules outlined in Table 10-11. Transmit and receive powers are referenced to Points S and R as shown in Figure 10-2. Table 10-9 and Table 10-10 provide detailed specifications and link budget information for the 26-type OLIU.

- Alarm Thresholding

  The following parameters are monitored at the OC-1 interface:

  — Loss of signal

  — Loss of frame

  — Loss of pointer

  — Line AIS

  — B2 thresholding signal fail

  — B2 thresholding signal degrade. (B2 signal degrade thresholds are user settable in the range from 10^{-5} to 10^{-9} BER.)

- Performance Monitoring (See Table 10-3 and Table 10-23.)

  — Section severely errored frame seconds (SEFS)

  — Line parameter B2

  — STS pointer justification (OC-3 R11.0 and later).

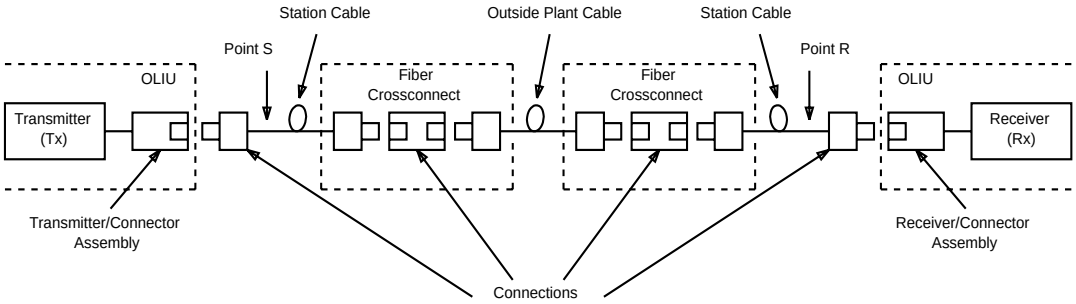

Figure 10-2. Optical System Interfaces (Points S and R)

Table 10-9 lists the 26G2-U OLIU specifications.

Table 10-9. 26-Type OLIU Specifications

System Information:	**26-Type**
Terminal Equipment Identification	26-type OLIU
Optical Line Rate (Mb/s)	51.84 Mb/s
Optical Line Coding	Scrambled NRZ
Optical Wavelength	1310 nm
Performance	Not applicable
Transmitter Information:	
Optical Device Temperature Controller	No TEC
FDA Classification	Class I
Optical Source	InGaAsP Laser, MLM* Structure
Faceplate Optical Connector	UOC buildout assembly† Single Mode
Receiver Information:	
Optical Device Temperature Controller	None
Optical Detector	InGaAsP PIN
Faceplate Optical Connector	UOC buildout assembly† Multi-Mode

* A higher quality SLM laser may be used instead of the MLM laser.

† The universal optical connector (UOC) buildout assembly consists of a faceplate-mounted block assembly and either 0 dB, 5 dB, 10 dB, or 15 dB buildout in either ST, SC, or FC-type connectors. FC-type connectors are not available for multimode cabling.

Table 10-10 and Table 10-11 list the link budgets for the 26-type OLIU circuit packs.

Table 10-10. 26-Type OLIU Link Budgets

Parameter	26-Type
Minimum Wavelength (λ_{Tmin})	1272 nm
Maximum Wavelength (λ_{Tmax})	1350 nm
Spectral Width ($\delta \lambda_{rms}$)	3.0 nm
Maximum Transmitter Power (P_{Tmax}) *	–0.0 dBm
Minimum Transmitter Power (P_{Tmin}) *	–7.0 dBm
Maximum Received Power (P_{Rmax})	–13.8 dBm
Minimum Input Power (P_{Rmin})	–30.8 dBm
Minimum System Gain (S-R)‡	23.8 dB
Optical Path Penalty (P_O) †	1.0 dB
Connector Loss ‡	1.5 dB
Unallocated Margin	1.5 dB
Minimum Loss Budget	13.8 dB
Maximum Loss Budget	19.8 dB
Maximum Span Length§	44 km

Notes:

1. All values are for both controlled and uncontrolled environmental conditions.

* Transmit and receive powers are referenced to points S and R as shown in Figure 10-2.

† Optical path penalty includes effects of dispersion, reflection and jitter that occur on the optical path.

‡ One connector (0.75 dB) on each end is assumed to connect station cable to outside plant.

§ The 26-type OLIUs are dispersion limited at 44 km, due to the wider wavelength range. Assuming fiber with zero dispersion wavelength between 1300 and 1320 nm, the worst case dispersion over the transmitter wavelength range of 1272 to 1350 nm is 4.88 psec/nm km. This implies a 44 km span would have a total dispersion of about 215 psec/nm.

Table 10-11. 26-Type OLIU Link Budgets - Multimode Operation

Fiber Bandwidth	Maximum Span Length (km)
1000 MHz-km	19.8
800 MHz-km	19.8
500 MHz-km	19.8
300 MHz-km	13.6

Note: The maximum Link Budget loss is 19.8 dB.

Multimode fiber operation requires a minimum exit bandwidth of 44 MHz to ensure that dispersion loss is kept below acceptable levels. If the fiber is already installed and the exit bandwidth is measured to be 44 MHz or greater, then the maximum link budget values can be used to determine if the loss budget is sufficient for that fiber.

If planning a new fiber installation, the values given in the table (given for a number of commercially available fiber bandwidth-distance products) can be used. Fiber distances are calculated using the 44 MHz exit bandwidth limit; however, actual exit bandwidths may be higher for these distances due to the existence of splices. This may permit longer span lengths to be achieved for the given fiber bandwidths than those specified in the table. In this case, however, the span length can only be increased to the point where the system is loss limited as specified by the maximum multimode link budget given in the table (1 db/km cable is assumed).

Long Reach OC-3 Interface (28G-U/28G2-U OLIU)

- Optical Specification

  The multilongitudinal mode laser transmitter supplies a non-return to zero (NRZ)-coded signal. For direct optical loopbacks, no attenuations are needed for the 28-type.

  The 28-type OLIU long reach OC-3 interface supports span lengths up to 51km, assuming 0.45 dB/km single-mode fiber and the span engineering rules outlined in Table 10-13. Transmit and receive powers are referenced to Points S and R as shown in Figure 10-2. Table 10-12 and Table 10-13 provide detailed specifications and link budget information for the 28-type OLIU.

- Alarm Thresholding

  The following parameters are monitored at the OC-3 interface:

  — Loss of signal

  — Loss of frame

  — Loss of pointer

  — Line AIS

  — B2 thresholding signal fail

  — B2 thresholding signal degrade. (B2 signal degrade thresholds are user settable in the range from 10^{-5} to 10^{-9} BER.)

- Performance Monitoring (See Table 10-3 and Table 10-23.)

  — Section severely errored frame seconds (SEFS)

  — Line parameter B2.

Table 10-12. 28-Type OLIU Specifications

System Information:	**28-Type**
Terminal Equipment Identification	28-type OLIU
Optical Line Rate (Mb/s)	155.520 Mb/s
Optical Line Coding	Scrambled NRZ
Optical Wavelength	1280-1335 nm
Performance	Not applicable
Transmitter Information:	
Optical Device Temperature Controller	None
FDA Classification	Class I
Optical Source	InGaAsP Laser, MLM Structure+
Faceplate Optical Connector	UOC buildout assembly* Single Mode
Receiver Information:	
Optical Device Temperature Controller	None
Optical Detector	InGaAsP PIN
Faceplate Optical Connector	UOC buildout assembly* Multi-Mode

* The universal optical connector (UOC) buildout assembly consists of a faceplate-mounted block assembly and either 0 dB, 5 dB, 10 dB, or 15 dB buildout in either ST, SC, or FC-type connectors. FC-type connectors are not available for multimode cabling.

\+ A tighter specification DFB laser (part #1243TAFA) may be supplied instead of the MLM laser. The DFB laser meets all the requirements of the MLM laser and DFB requirements in TR-253-CORE, Issue 2, December 1995.

Table 10-13 lists the link budgets for the 28-type OLIU.

Table 10-13. 28-Type OLIU Link Budgets.

Parameter	28-Type
Minimum Wavelength (λ_{Tmin})	1280 nm
Maximum Wavelength (λ_{Tmax})	1335 nm
Spectral Width ($\delta \lambda_{rms}$)	4.0 nm
Maximum Transmitter Power (P_{Tmax})	0.0 dBm
Minimum Transmitter Power (P_{Tmin})	-5.0 dBm
Maximum Received Power (P_{Rmax})	0.0 dBm
Minimum Input Power (P_{Rmin})	-34.0 dBm
Minimum System Gain (S-R) ‡	29.0 dB
Optical Path Penalty (P_O) †	1.0 dB
Connector Loss *	1.5 dB
Unallocated Margin**	1.5 dB
Minimum Loss Budget	0.0 dBm
Maximum Loss Budget	25.0 dB
Maximum Span Length§	55 km

Notes:

1. All terminology is consistent with TR-253, Issue 2. All specifications for 28-type OLIU meets or exceeds long reach (LR) values described in TR-253, Iss. 2.

* One connector (0.75) on each end is assumed to connect station cable to outside plant.

† Optical path penalty includes effects of dispersion, reflection and jitter that occur on the optical path

‡ The minimum system gain for the DDM-2000 already takes into account aging, temperature, and manufacturing tolerances as these figures are built into the minimum transmitter power. The DDM-2000 system gain can, thus, not be directly compared with the DDM-1000 system gain because the DDM-100 system gain does not include all of these effects. A similar penalty, called eye margin, is subtracted from the DDM-1000 loss budget after the value of system gain is determined.

§ Attenuation and dispersion can be the limiting factors in span length. For OC-3 single-mode fiber systems, dispersion is not a factor and all applications are attenuation limited. The limits must be calculated based on both factors and the lesser of the two defines the actual maximum span length. A rough rule of thumb for attenuation-limited systems is 0.45 dB/km. This estimate includes typical value loss (0.4 dB/km) and splice loss (0.2 dB per splice, 11 total splices) associated with single-mode fiber.

** Unallocated margin, or safety margin, is typically specified from 0 dB to 3dB.

Table 10-14. OC-3 OLIU Link Budget - Multimode Operation

	Maximum Span Length (km)
Fiber Bandwidth	**28G-U/28G2-U**
1000 MHz-km	6.5
800 MHz-km	5.1
500 MHz-km	3.1
300 MHz-km	1.8

Long Reach OC-12 Interface (29G-U OLIU)

- Optical Specification

  The distributed feedback laser supplies an NRZ-coded signal. For direct optical loopbacks, at least 10 dB of optical attenuation is needed for the 29G-U.

  The 29G-U OLIU long reach OC-12 interface supports span lengths up to 51 km, assuming 0.45 dB/km single-mode fiber (including splices) and the span engineering rules outlined in Table 10-16. Transmit and receive powers are referenced to points S and R as shown in Figure 10-2.
  Table 10-15 and Table 10-16 provide detailed specifications and link budget information for the 29G-U OLIU. Note that the 29G-U OLIU is not specified to operate over multimode fiber.

- Alarm Thresholding

  The following parameters are monitored at the OC-12 interface.

  — Loss of signal (LOS)

  — Loss of frame (LOF)

  — Loss of pointer (LOP)

  — Line AIS

  — B2 thresholding signal fail

  — B2 thresholding signal degrade. (B2 signal degrade thresholds are user settable in the range from 10^{-5} to 10^{-9} BER.)

- Performance Monitoring. (See Table 10-3 and Table 10-23.)

  — Section SEFS

  — Line parameter B2

  — STS pointer justifications.

Long Reach OC-12 Interface (29H-U OLIU)

- Optical Specification

  The distributed feedback laser supplies a NRZ-coded signal. For direct optical loopbacks, at least 10 dB of optical attenuation is needed for the 29H-U.

  The 29H-U OLIU long reach OC-12 interface supports span lengths up to 96 km, assuming 0.25 dB/km single-mode fiber (including splices) and the span engineering rules outlined in Table 10-16. Transmit and receive powers are referenced to points S and R as shown in Figure 10-2.
  Table 10-15 and Table 10-16 provide detailed specifications and link budget information for the 29H-U OLIU. Note that the 29H-U OLIU is not specified to operate over multimode fiber.

- Alarm Thresholding

  The following parameters are monitored at the OC-12 interface.

  — Loss of signal (LOS)

  — Loss of frame (LOF)

  — Loss of pointer (LOP)

  — Line AIS

  — B2 thresholding signal fail

  — B2 thresholding signal degrade. (B2 signal degrade thresholds are user settable in the range from 10^{-5} to 10^{-9} BER.)

- Performance Monitoring (See Table 10-3 and Table 10-23.)

  — Section SEFS

  — Line parameter B2

  — STS pointer justifications.

Table 10-15. 29G-U/29H-U OLIU Specifications

System Information:	**29G-U**	**29H-U**
Terminal Equipment Identification Optical Line Rate (Mb/s) Optical Line Coding Optical Wavelength (nm) Performance	29G-U OLIU 622.080 Mb/s Scrambled NRZ 1310 nm SONET LR-1 DFB (Long Reach)	29H-U OLIU 622.080 Mb/s Scrambled NRZ 1550 nm SONET LR-1 DFB (Long Reach)
Transmitter Information:		
Optical Device Temperature Controller FDA Classification Optical Source Faceplate Optical Connector	None Class I InGaAsP Laser, SLM Structure UOC Buildout Assembly (single-mode) *	None Class I InGaAsP Laser, SLM Structure UOC Buildout Assembly (single-mode) *
Receiver Information:		
Optical Device Temperature Controller Optical Detector Faceplate Optical Connector	None InGaAs PIN UOC Buildout Assembly (multi-mode) *	None InGaAs PIN UOC Buildout Assembly (multi-mode) *

* The universal optical connector (UOC) buildout assembly consists of a faceplate-mounted block assembly and either 0 dB, 5 dB, 10 dB, or 15 dB buildout in either ST, SC, or FC-type connectors.

Table 10-16. 29G-U/29H-U OLIU Link Budgets (Notes)

Parameter	29G-U	29H-U
Minimum Wavelength (λ_{Tmin})	1280 nm	1530 nm
Maximum Wavelength (λ_{Tmax})	1335 nm	1570 nm
Spectral Width ($\delta\lambda_{20}$)	1.0 nm	1.0 nm
Maximum Transmitter Power *(P_{Tmax})	+1.9 dBm	+2.0 dBm
Minimum Transmitter Power (P_{Tmin})	–2.5 dBm	–2.5 dBm
Maximum Received Power (P_{Rmax})	–8.0 dBm	–8.0 dBm
Minimum Received Power (P_{Rmin})	–30.5 dBm	–31.0 dBm
Minimum System Gain (S-R) †	28.0 dB	28.5 dB
Optical Path Penalty (P_O) ‡	1.0 dB	1.0 dB
Connector Loss §	1.5 dB	1.5 dB
Unallocated Margin ¶	1.5 dB	2.0 dB
Minimum Loss Budget **	8.0 dB	10.0 dB
Maximum Loss Budget ††	**24.0 dB**	**24.0 dB**
Maximum Span Length ‡‡	51 km	96 km

Notes:

1. All terminology is consistent with TR-253, Iss. 2. All values are worst-case end of life.
2. All specifications for the 29G-U/29H-U meet or exceed long reach (LR) values described in TR-253, Iss. 2.

* Transmit and receive powers are referenced to points S and R as shown in Figure 10-2.

† The minimum system gain for the DDM-2000 already takes into account aging, temperature, and manufacturing tolerances as these figures are built into the minimum transmitter power. The DDM-2000 system gain can, thus, not be directly compared with the DDM-1000 system gain because the DDM-1000 system gain does not include all of these effects. A similar penalty, called eye margin, is subtracted from the DDM-1000 loss budget after the value of system gain is determined.

‡ Optical path penalty includes effects of dispersion, reflection and jitter that occur on the optical path. The 29G-U has 4.0 dB of total margin. Optical path penalty is normally 1.0 dB. The 29H-U has 4.5 dB of total margin. Optical path penalty is normally 1.0 dB, which implies 1800 psec/nm total dispersion. Typical nondispersion fiber has 10 psec/nm km dispersion in the 1550 nm wavelength range.

§ One connector (0.75 dB) on each end is assumed to connect station cable to outside plant.

¶ Unallocated margin, or safety margin, is typically specified from 0 dB to 3 dB.

** The 29G-U/29H-U requires an external lightguide buildout as part of the connector assembly for loopbacks and for loss budgets less than 10 dB.

†† Budget available for both station and transmission cable and splices.

‡‡ Attenuation can be the limiting factors in span length. A rough rule of thumb for attenuation-limited systems operating in the 1310 nm wavelength range is 0.45 dB/km. This estimate includes typical cable loss (0.4 dB/km) and splice loss (0.2 dB per splice, 11 total splices) associated with single-mode fiber in the 1310 nm range.

For the 29G-U, the maximum distance is not dispersion limited because single longitudinal mode laser is used. Given the attenuation assumption, the maximum span length for the 29G-U is 51 km.

Attenuation can be the limiting factors in span length. A rough rule of thumb for attenuation-limited systems operating in the 1550 nm wavelength range is 0.25 dB/km, including cable and splice loss.

For the 29H-U, the maximum distance is not dispersion limited because single longitudinal mode laser is used. Given the attenuation assumption, the maximum span length for the 29H-U is 96 km.

Maximum span length can be calculated more precisely based on particular fiber and splice characteristics and local engineering rules.

OC-3 Optical Interface Mixing

Mixing different OC-3 rate OLIUs at opposite ends of an optical link is often necessary for technical reasons or for convenience. The following information will aid in planning and engineering optical links having different types of OC-3 rate OLIUs at each end of the fiber. Table 10-17 details the minimum link budget necessary for each pairing of OC-3 rate OLIUs.

To use Table 10-17, locate the number at the intersection of the transmitter/receiver pair of interest. This number is the minimum attenuation necessary for proper operation of that transmitter/receiver pair. The link must have at least this much attenuation either from fiber loss, splice loss, connector loss, external attenuators, or a combination of these, or the receiver will be overdriven and the link will not operate properly.

Table 10-17. OC-3 Rate OLIU Mixes - Minimum Link Budgets (dB)

	Receiver				
Transmitter	**22F**	**22F-U/ 22F2-U**	**22G-U**	**22G2-U/ 22G3-U/ 22G4-U**	**28G-U/ 28G2-U**
22F	0.0	0.0	0.0	0.0	0.0
22F-U/22F2-U	0.0	0.0	0.0	0.0	0.0
22G-U	7.0	0.0	7.0	0.0	0.0
22G2-U/ 22G3-U/ 22G4-U	7.0	0.0	7.0	0.0	0.0
28G-U/28G2-U	7.0	0.0	7.0	0.0	0.0

Note that the minimum link budget is not always symmetrical. A transmitter/receiver pair may have one minimum link budget in one direction and another in the opposite direction. Be careful of this asymmetry when planning and engineering a link having mixed OLIUs.

NOTE:
When using universal optical buildout attenuators for OLIUs equipped with Universal Optical Connectors (for example, 28G-U and 22D-U), the buildout must have the same type fiber on both sides, that is, single-mode to single-mode or multimode to multimode. The buildout must also match the mode of the fiber. Therefore, when a single-mode jumper is used, the buildout would be on the transmit side (OUT) of the OLIU and when a multimode jumper is used, the buildout would be on the receive side (IN) of the OLIU. When using in-line attenuators for non-U OLIUs, place the attenuator in the bay frame PANDUIT. Make sure that the mode type of the attenuator matches the mode of the fiber to ensure proper attenuation.

Table 10-18 details the maximum link budgets for each pairing of OC-3 rate OLIUs when operating on single-mode (SM) fiber. These numbers give the maximum attenuation acceptable for proper operation of each transmitter/receiver pair. The link must have no more than this much attenuation either from fiber loss, splice loss, connector loss, external attenuators or a combination of these or the link will not operate properly. The maximum link budgets for SM fiber were calculated using the following margins:

- Optical Path Penalty (dB) 1.0
- Connector Loss (dB) 1.5

Table 10-18. OC-3 Rate OLIU Mixes - Maximum Link Budgets for SM Fiber (dB)

	Receiver		
Transmitter	**22F/ 22F-U/ 22F2-U**	**22G-U/ 22G2-U/ 22G3-U / 22G4-U**	**28G-U/ 28G2-U**
22F	15.0	15.0	15.0
22G-U/22G2-U	23.0	23.0	23.0
22G3-U/22G4-U	25.0	25.0	25.0
28G-Type	25.0	25.0	25.0

NOTE:
The maximum link budget is not always symmetrical. A transmitter/receiver pair may have one maximum link budget in one direction and another in the opposite direction. For example, a 28G-U OLIU transmitting to a 22F OLIU has a maximum SM link budget of 25.0 dB. In the opposite direction, though, a 22F OLIU transmitting to a 28G-U OLIU has a maximum SM link budget of 15.0 dB. Be careful of this asymmetry when planning and engineering a link having mixed OLIUs. Note also that the 22D-U OLIUs will not operate when transmitting into single-mode fiber.

Table 10-19 details the maximum link budgets for each pairing of OC-3 rate OLIUs when operating on multimode (MM) fiber. These numbers give the maximum attenuation acceptable for proper operation of each transmitter/receiver pair. The link must have no more than this much attenuation either from fiber loss, splice loss, connector loss, external attenuators or a combination of these or the link will not operate properly. The maximum link budgets for MM fiber were calculated using the following margins. The first column of margins applies to any link where there is at least one OC-3 OLIU (28G-U/28G2-U, 22F-type or 22G-type). The second column of margins applies to links having two IS-3 (22D-U) OLIUs.

	At Least One OC-3 OLIU	**IS-3 OLIUs Only**
MM Optical Path Penalty (dB)	4.0	1.6
Connector Loss (dB)	1.5	1.5
Unallocated Margin (dB)	1.5	2.0

NOTE:
The maximum link budget is not always symmetrical. A transmitter/receiver pair may have one maximum link budget in one direction and another in the opposite direction. For example, a 28G-U transmitting to a 22F has a maximum MM link budget of 22.0 dB. In the opposite direction, though, a 22F transmitting to a 28G-U has a maximum MM link budget of 12.0 dB. Be careful of this asymmetry when planning and engineering a link having mixed OLIUs.

Table 10-19. . OC-3 Rate OLIU Mixes - Maximum Link Budgets for MM Fiber (dB)

	Receiver		
Transmitter	**22F/ 22F-U/ 22F2-U**	**22G-U/ 22G2-U/ 22G3-U/ 22G4-U**	**28G-U/ 228G2-U**
22F/22F-U/22F2-U	12.0	12.0	12.0
22G-U/22G2-U	20.0	20.0	20.0
22G3-U/22G4-U	22.0	22.0	22.0
28G-U/28G2-U	22.0	22.0	22.0

Plug-In Maintenance Sparing Guidelines

Table 10-20 provides a guideline for determining the number of DDM-2000 FiberReach plug-in spares needed for a given number of plug-ins in the field. The sparing guide serves as an initial estimate and is calculated with the following assumptions:

- The method for calculating spares follows the procedure described in Telcordia Technologies SR-TSY-000385, Issue 1.
- The steady-state failure rate is assumed. Failure rates are based on the reliability prediction procedure (RPP) method described in TR-TSY-000332, Issue 4.
- The spare availability objective (SAO) is 99 percent. The SAO is the long-term probability that a spare plug-in is available when it is needed.
- A no-trouble-found (NTF) factor of 1.67 is multiplied to the failure rate. This accounts for replacements of plug-ins when actually no failure has occurred. The NTF factor is expected to approach 1.25 as the product matures. The likelihood of an NTF decreases as the product matures, and sparing needs will therefore diminish over time.
- Turnaround time of a returned plug-in is two weeks.

Table 10-20. Sparing Guidelines

SAO = 99%

DDM-2000 OC-3 and OC-12, FiberReach NTF factor = 1.67
Turn around time (weeks) = 2
Turn around time (hours) = 336

Plug-In Code (FIT)	Number of Spares						Revised Date
	NS=1	NS=2	NS=3	NS=4	NS=5	NS=6	
	NRT						
	0.14	0.43	0.82	1.27	1.78	2.3	
BBF1 (745)	335	1029	1962	3038	4258	5502	
BBF1B (859)	290	892	1701	2635	3693	4772	09/02/1998
BBF2 (2739)	91	280	534	826	1158	1497	
BBF2B (2311)	108	332	632	979	1373	1774	
BBF2C (2345)	106	327	623	965	1353	1748	08/24/1999
BBF3 (1310)	190	585	1116	1728	2422	3129	09/02/1998
BBF3B (1235)	202	621	1183	1833	2569	3319	09/02/1998
BBF4 (2345)	106	327	623	965	1353	1748	08/24/1999

Plug-In Code (FIT)	Number of Spares						Revised Date
	NS=1	NS=2	NS=3	NS=4	NS=5	NS=6	
	NRT						
	0.14	0.43	0.82	1.27	1.78	2.3	
BBF6 (1427)	175	537	1024	1586	2223	2872	09/02/1998
BBF8 (5216)	48	147	280	434	608	786	09/02/1998
BBF9 (2037)	122	376	717	1111	1557	2012	08/24/1999
BBF10 (2277)	110	337	642	994	1393	1800	08/24/1999
BBG1 (4917)	51	156	297	460	645	834	
BBG2 (902)	277	850	1620	2509	3517	4544	
BBG2B (820)	304	935	1782	2760	3869	4999	08/24/1999
BBG3 (1088)	229	704	1343	2080	2916	3767	
BBG4 (902)	277	850	1620	2509	3517	4544	09/02/1998
BBG4B (1056)	236	726	1384	2143	3004	3882	09/02/1998
BBG5 (5284)	47	145	277	428	600	776	
BBG6 (2193)	114	349	666	1032	1447	1869	
BBG7 (3433)	73	223	426	659	924	1194	
BBG8 (4505)	55	170	324	502	704	910	09/02/1998
BBG8B (4442)	56	173	329	510	714	923	09/02/1998
BBG9 (4084)	61	188	358	554	777	1004	08/24/1999
BBG10 (4409)	57	174	331	513	719	930	08/24/1999
BBG11 (3144)	79	244	465	720	1009	1304	
BBG12 (2586)	96	296	565	875	1227	1585	
BBG19 (729)	342	1051	2005	3105	4351	5623	09/02/1998
BBG20 (6550)	38	117	223	346	484	626	11/06/1997
BCP1 (5050)	49	152	289	448	628	812	
BCP2 (2922)	85	262	500	775	1086	1403	
BCP3 (2692)	93	285	543	841	1178	1523	
BCP4 (10000)	25	77	146	226	317	410	
21D (1959)	127	391	746	1155	1619	2092	
21D-U (1355)	184	566	1078	1670	2341	3025	08/24/1999
21G (6348)	39	121	230	357	500	646	
21G-U (3935)	63	195	371	575	806	1042	
21G2-U (4087)	61	188	358	554	776	1003	08/24/1999

Plug-In Code (FIT)	Number of Spares						Revised Date
	NS=1	NS=2	NS=3	NS=4	NS=5	NS=6	
	NRT						
	0.14	0.43	0.82	1.27	1.78	2.3	
21G3-U (1768)	141	433	827	1280	1794	2318	08/24/1999
22D-U (1959)*	127	391	746	1155	1619	2092	08/24/1999
22F (3317)	75	231	441	682	956	1236	
22F2-U (2033)	123	377	719	1113	1560	2016	09/02/1998
22G-U (2880)*	87	266	507	786	1101	1423	
22G2-U (2197)	114	349	665	1030	1444	1866	09/02/1998
22G3-U (4078)	61	188	358	555	778	1005	08/24/1999
22G4-U (1426)*	175	537	1025	1587	2225	2874	08/24/1999
23G (10029)	25	76	146	226	316	409	
23G-U (9023)	28	85	162	251	352	454	
23H (12836)	19	60	114	176	247	319	
23H-U (11552)	22	66	127	196	275	355	
23R (8364)	30	92	175	271	379	490	
23R-U (9807)	25	78	149	231	323	418	
23S (11470)	22	67	127	197	277	357	
24G-U (2080)*	120	368	703	1088	1525	1971	08/24/1999
24H-U (2388)	104	321	612	948	1328	1716	08/24/1999
26G-U (2468)	101	311	592	917	1285	1661	
26G2-U (2525)	99	303	579	896	1256	1623	08/24/1999
27G-U (3176)	79	241	460	713	999	1291	
27G2-U (2823)	88	271	518	802	1124	1452	08/24/1999
28G-U (3860)	65	199	379	586	822	1062	09/02/1998
28G2-U†							
29G-U (3264)*	76	235	448	693	972	1256	12/22/1999
29H-U (3049)*	82	251	479	742	1040	1344	12/28/1999

* These OLIU circuit packs are equipped with a factory installed, removable SC-type buildout lightguide connector. Two 0 dB ST connectors are shipped loose with the circuit pack except for 22G-Us.

† Information not available at time of document release.

Example:

- For the 22F, if circuit pack population is between 76 and 231, number of recommended spares is 2.

Universal Optical Connectors

The DDM-2000 FiberReach Multiplexers provide Lucent's universal optical connector on the OLIUs. This connector is a 2-part connector consisting of a faceplate-mounted block and an optical buildout. The faceplate block optionally supports an ST, SC, or FC-type optical buildout.

A 0 dB ST-type connector is shipped as standard with each OLIU except for 22G-Us. Optional SC or FC 0 dB, or attenuated buildouts can be ordered separately as listed in Table 10-21.

NOTE:
Two 0 dB SC-type removable connectors are installed on 22D-U, 22G4-U, 29G-U, and 29H-U OLIUs. Two 0 dB ST connectors are shipped loose with these packs.

Table 10-21. Universal Buildout Attenuators

Description	Connection	Loss (dB)	Comcode
A3060 SC 0 dB buildout	SM-SM	0	106708951
A3060B1 SC 5 dB buildout	SM-SM	5	107406142
A3060D1 SC 10 dB buildout	SM-SM	10	107406159
A3060F1 SC 15 dB buildout	SM-SM	15	107406167
ASCM5 SC 5dB buildout	SM-MM	5	108440579
ASCM10 SC 10dB buildout	SM-MM	10	108440595
ASCM15 SC 15dB buildout	SM-MM	15	108440611
A3070 *ST*® 0 dB buildout	SM-SM	0	106795354
A3070B1 *ST* 5 dB buildout	SM-SM	5	107406183
A3070D1 *ST* 10 dB buildout	SM-SM	10	107406191
A3070F1 *ST* 15 dB buildout	SM-SM	15	107406209
ASTM5 SC 5dB buildout	SM-MM	5	108052960
ASTM10 SC 10dB buildout	SM-MM	10	108052994
ASTM15 SC 15dB buildout	SM-MM	15	108053018
A3080 FC 0 dB buildout	SM-SM	0	106795404
A3080B1 FC 5 dB buildout	SM-SM	5	107406225
A3080D1 FC 10 dB buildout	SM-SM	10	107406233
A3080F1 FC 15 dB buildout	SM-SM	15	107406241
AFCM5 FC 5dB buildout	SM-MM	5	108107285
AFCM10 FC 10dB buildout	SM-MM	10	108107301
AFCM15 FC 15dB buildout	SM-MM	15	108107327

Table 10-21. Universal Buildout Attenuators

Description	Connection	Loss (dB)	Comcode
A2060B SC 5 dB buildout	MM-MM	5	106795271
A2060D SC 10 dB buildout	MM-MM	10	106795289
A2060F SC 15 dB buildout	MM-MM	15	106795297
A2070B *ST* 5 dB buildout	MM-MM	5	106795313
A2070D *ST* 10 dB buildout	MM-MM	10	106795321
A2070F *ST* 15 dB buildout	MM-MM	15	106795339

Figure 10-3 shows the universal optical connector used on the OLIU circuit packs.

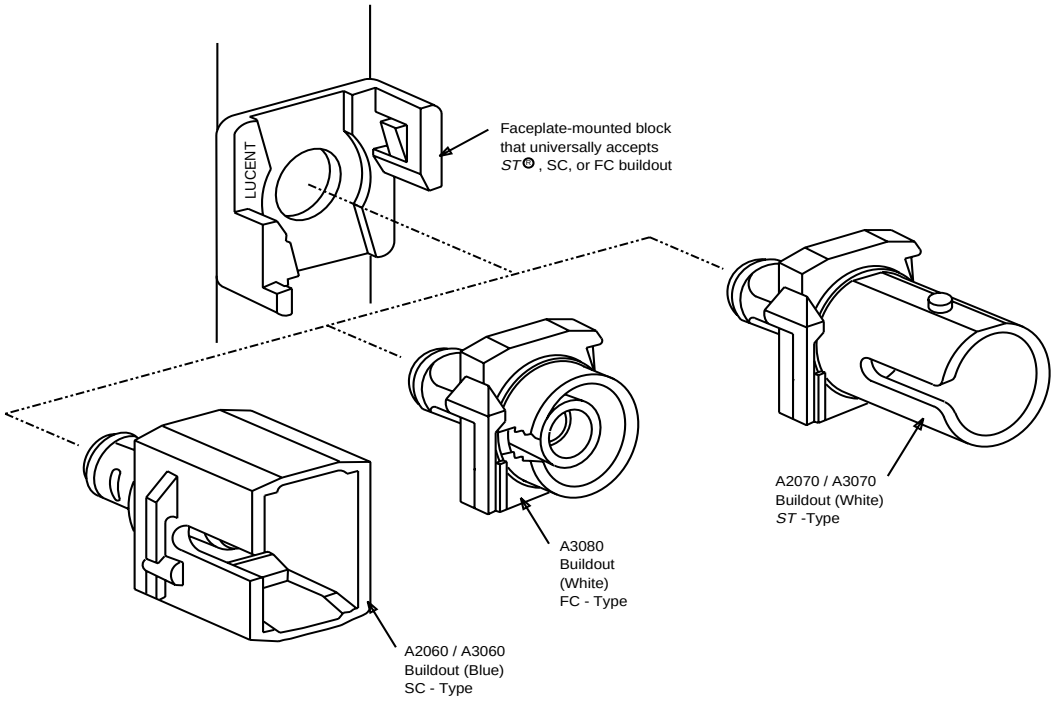

Figure 10-3. Universal Optical Connector

SONET Overhead Bytes

The DDM-2000 FiberReach Multiplexer currently uses the K2 byte in the SONET format for synchronization signaling. The reserved V4-byte in the VT1.5 superframe is used for internal fault detection in a DDM-2000 FiberReach Multiplexer. This internal usage of the V4-byte may cause the value of the transmitted V4-byte to vary.

The DDM-2000 FiberReach Multiplexer does not depend on, and always ignores, the value of the V4-byte received on its optical interface.

Performance

Wander/Jitter

- The OC-1 interface accommodates at least 10 microseconds of wander per 24-hour period without buffer overflow or depletion.
- For SONET optical interfaces, the maximum time interval error (MTIE) does not exceed 60 nanoseconds phase variation when timed with a wander-free reference.
- Jitter transfer, tolerance, and generation requirements are met as specified in TR-253 and TR-499.
- The SONET interfaces meet the T1.101 OC-N output short-term stability mask.

Signal Performance

The DDM-2000 FiberReach Multiplexer significantly exceeds the following specifications for the standard networks, as defined in TR-499, Issue 5.

- For systems interfacing at the DS1 rate, the number of errored seconds, during a two-hour, one-way loopback test, is less than ten.
- The bit error rate (BER) is less than 10^{-9} for both the DS1 and DS3 rates. Burst-errored seconds are excluded.
- The frequency of burst-errored seconds, other than those caused by protection switching induced by hard equipment failures, averages less than four per day.

Protection Switching

Ring Networks

Path protection rings feed a SONET payload (STS or VT) from the ring entry point, simultaneously in both rotations of the ring, to the signal's ring exit point. The node that terminates the signal from the ring monitors both ring rotations and is responsible for selecting the signal that has the highest quality based on loss of signal (LOS), path alarm indication signal (AIS), and path bit error rate (BER) performance. On pass-through paths, all detected hard failures (LOS, LOF, LOP, line AIS, STS-1 path AIS, or STS-1 path signal failure based on BER) result in VT AIS insertion in the outgoing signals. This allows the terminating node to be aware of the failure and to switch to protection. Protection switching is completed within 50 milliseconds of failure detection. Similarly, for dropped nonterminated paths, if both incoming STS-1s have any of the previous failures, VT AIS will be inserted in the dropped signal.

Under normal conditions, both incoming SONET path signals to the switch selection point are of high quality, and the signal can be selected from either ring. A failure or a transmission degradation on one of the rings requires that the other ring path be selected. DDM-2000 FiberReach provides nonrevertive switching to minimize the impact on critical customer services by giving the service provider control when, and if, the critical service should revert to a particular ring. A manual path protection switching command allows switching back to the original path for ease of ring maintenance, if desired.

Transient Performance

Power Loss Restart

After system shutdown due to power loss, the system will begin error free transmission within one minute of restoration of power.

Transmission Start-Up on Signal Application

The system, after having no signal applied for greater than one minute at the DSX-n interface, will begin error free transmission within five seconds of the reapplication of a signal.

Delay

Table 10-22 lists the worst-case measured 1-way transmission delay within a DDM-2000 FiberReach Multiplexer.

Table 10-22. DDM-2000 OC-1 Transmission Delay in Microseconds

Mode (High-Speed)	DS1 Low-Speed Interface
Ring (OC-1)*	100

* Ring delay is based on an OC-1 to low-speed DS1.

Performance Monitoring

Table 10-23 shows the provisionable range of the thresholds for monitored parameters and, in brackets, the default thresholds. Thresholding of any parameter(s) can be disabled.

Table 10-23. Performance Monitoring Parameters Provisionable via the CIT

Parameter Definition		Threshold Range [Default]		Command
Facility	**Measure**	**Current Quarter Hour**	**Current Day**	**set-pmthres-**
OC-1/OC-3* Section	SE Frame Seconds (SEFS)	1-63[10]	1-4095[30]	**sect**
OC-1 Line	B2 Coding Violations (CV) B2 Errored Seconds (ES) B2 Errored Seconds Type A (ESA) B2 Errored Seconds Type B (ESB) B2 Severely Errored Seconds (SES) B2 Unavailable Seconds (UAS) STS Pointer Justification Counts (PJC)†	1-4613[461] 1-900[40] 1-900[30] 1-900[30] 1-63[20] 1-63[30] (1-65535)[60]	1-442848 [44285] (1-65535)[900] (1-65535)[90] (1-65535)[90] (1-4095)[60] (1-4095)[90] 1-9999999 [5760]	**line** **line** **line** **line** **line** **line** **line**
OC-3 Line*	B2 Coding Violations (CV)‡ B2 Errored Seconds (ES)‡ B2 Errored Seconds Type A (ESA)‡ B2 Errored Seconds Type B (ESB)‡ B2 Severely Errored Seconds (SES)‡ B2 Unavailable Seconds (UAS)‡	1-13841[1384] 1-900[40] 1-900[30] 1-900[30] 1-63[20] 1-63[30]	1-1328736 [132874] (1-65535)[900] (1-65535)[90] (1-65535)[90] (1-4095)[60] (1-4095)[90]	**line** **line** **line** **line** **line** **line**
OC-12 Section§	SE Frame Seconds (SEFS)	1-63[10]	1-4095[30]	**sect**
OC-12 Line¶	B2 Coding Violations (CV) B2 Errored Seconds (ES) B2 Errored Seconds Type A (ESA) B2 Errored Seconds Type B (ESB) B2 Severely Errored Seconds (SES) B2 Unavailable Seconds (UAS) STS Pointer Justification (PJC)	1-55365 [5537] 1-900 [40] 1-900 [30] 1-900 [30] 1-63 [20] 1-63 [30] 1-65535 [60]	1-5315040 [531504] 1-65535 [900] 1-65535 [90] 1-65535 [90] 1-4095 [60] 1-4095 [90] 1-9999999 [5760]	**line** **line** **line** **line** **line** **line** **line**
STS-1 Path	B3 Coding Violations (CV) B3 Errored Seconds (ESA) B3 Errored Seconds Type A (ESA) B3 Errored Seconds Type B (ESB) B3 Severely Errored Seconds (SES) B3 Unavailable Seconds (UAS)	1-4510[451] 1-900[40] 1-900[30] 1-900[30] 1-63[20] 1-63[30]	1-432960 [43296] 1-65535[900] 1-65535[90] 1-65535[90] 1-4095[60] 1-4095[90]	**sts1** **sts1** **sts1** **sts1** **sts1** **sts1**
VT1.5 Path	V5 Errored Seconds (ES)** V5 Severely Errored Seconds (SES)** V5 Unavailable Seconds (UAS)**	1-900 [40] 1-63[20] 1-63[30]	1-65535 [900] 1-4095 [60] 1-4095 [90]	**vtl** **vtl** **vtl**

Parameter Definition		Threshold Range [Default]		Command
Facility	**Measure**	**Current Quarter Hour**	**Current Day**	**set-pmthres-**
DS-1 Path	ES-P Errored Seconds § SES-P Severely Errored Seconds§ UAS-P Unavailable Seconds§ ES-PFE Errored Seconds§ SES-PFE Severely Errored Seconds§ UAS-PFE Unavailable Seconds§ CV-P (SF) Coding Violations§ CV-P (ESF) Coding Violations§ CV-PFE Coding Violations§	1-900[65] 1-63[10] 1-63[10] 1-900[65] 1-63[10] 1-63[10] 1-16383[72] 1-16383[13296] 1-16383[13296]	1-65535 [648] 1-4095 [100] 1-4095 [10] 1-65535 [648] 1-4095 [100] 1-4095 [10] 1-1048575 [691] 1-1048575 [132960] 1-1048575 [132960]	**tl** **tl** **tl** **tl** **tl** **tl** **tl** **tl** **tl**
DS-1 Line	ES-L Line Errored Seconds	1- 900[65]	1-65535 [648]	**tl**
DS3 Path	P-Bit Error Counts SE Frame Seconds (SEFS)	1-4026 [403] 1-63 [10]	1-386500 [38650] 1-4095 [30]	**t3** **t3**
Enhanced DS3 Path for P-Bits, F&M Bits, and C-Bits from Fiber and DSX	CV-P Coding Violations ES-P Errored Seconds SES-P Severely Errored Seconds UAS-P Unavailable Seconds SEFS	1-16383 [40] 1-900 [25] 1-63 [4] 1-63 [10] 1-63 [2]	1-1048575 [3820] 1-65535 [250] 1-4095 [40] 1-4095 [10] 1-4095 [8]	**t3** **t3** **t3** **t3** **t3**
DS3 Line	CV-L Coding Violations Errored Seconds, Line (ES-L) Severely Errored Seconds, Line (SES-L)	1-16383 [40] 1-900 [25] 1-63 [4]	1-1048575 [3865] 1-65535 [250] 1-4095 [40]	**t3** **t3** **t3**

* When equipped with a 28-type OLIU in the Main slots.

† Only applies to Release 3.0 and later.

‡ Only applies to Release 2.2.

§ When equipped with a 29-type OLIU in the Main slots.

¶ When equipped with a 29-type OLIU in the Main slots.

** Feature package option.

Signaling Mode

Loop start signaling with fast forward disconnect is provided with the channel units used in the *SLC* Series 5 and *SLC*-2000 systems with the *SLC*-2000 MSDT feature.

Digital Data Performance

The AUA52B OCU (office channel unit) dataport is designed to provide end links in DDS. These end links have certain features as follows:

- One 4-wire circuit per plug-in pair.
- Data rate — 2.4, 4.8, 9.6, 19.2, 56, or 64 kb/s.
- Error correction. A digital line bit error rate of 10^{-3} is improved to 10^{-8} for any data rate without reducing the channel capacity of the bank.
- Zero Code Allowed option. Allows an all-zero byte to be transmitted toward the digital line (which must be optioned for B8ZS zero code suppression).
- Secondary channel. An option which permits a feature of DDS that provides the customer with a low-speed telemetry channel supplementing the primary data channel at any data rate. (See RL83-01-163.)

Operations Interfaces

This section presents the operation interfaces that are required to support technician access to the system and allow alarms and status information generated by the system to be reported. The local operations interfaces include the craft interface terminal (CIT) interface, the user panel, and the equipment indicators. The DDM-2000 FiberReach Multiplexer supports a direct serial TBOS interface* and user-definable miscellaneous discretes. Remote office alarms*, parallel telemetry*, and TL1/X.25 interfaces are provided by the host multiplexer.

Craft Interface Terminal

The system provides an EIA-232-D compatible front access CIT interface configured as data communications equipment (DCE). The CIT interface provides data rates of 300, 1200, 2400, 4800, 9600, and 19,200 baud.

The CIT interface operates full duplex using one start bit, eight data bits, and one stop bit. Table 10-24 describes the pins supported on the CIT interfaces.

* This is not applicable for users of Release 3.0 and later due to the introduction of Target ID Address Resolution Protocol (TARP) for Operations Interworking (OI).

Table 10-24. CIT Interface Pin Connections

EIA-232-D Pin	Front Access CIT (DCE)
Pin 2 - Circuit BA Transmitted Data	Carries data from terminal to DDM-2000 FiberReach
Pin 3 - Circuit BB Received Data	Carries data from DDM-2000 FiberReach to terminal
Pin 7 - Circuit AB Signal Ground	Signal ground
Pin 8 - Circuit CF Received Line Signal Detector	Not used
Pin 20 - Circuit CD DTE Ready	Indicates to DDM-2000 FiberReach that modem or terminal is connected

Although not required for routine installation and maintenance, a CIT is recommended for more sophisticated maintenance and administrative activities. A personal computer (PC) is required for software download and to run the CPro-2000 software. The DDM-2000 FiberReach Multiplexer CIT port (mounted on the user panel) is a standard EIA-232-D (supersedes RS-232C specification) interface configured as DCE for direct connection to a CIT. The CIT port is compatible with most ANSI 3.64 ASCII terminals; however, it is optimized for standard screens with display areas of 24 lines by 72 (or more) columns. A pager function is included in the DDM-2000 FiberReach Multiplexer to accommodate screen lengths from 3 lines to 150 lines.

Those CITs compatible with DDM-2000 OC-3 or OC-12 Multiplexers are directly compatible with the DDM-2000 FiberReach Multiplexer.

Personal Computer Specifications for Software Download

The personal computer (PC) used for software download should have:

- A minimum of 640K of random access memory (RAM)
- MS-DOS*version 2.0 or newer
- Hard disk
- At least one floppy disk drive of 360K or larger capacity. Although the disk drive may accommodate either floppy or hard disk, a hard disk is preferred for its better performance. The disk requirement is met with most portable MS-DOS PCs with a single 3.5-inch disk. An MS-DOS PC with a hard disk or a 3.5-inch 1.44M floppy disk may also be used.

* Registered trademark of Microsoft Corporation.

- Windows NT available to work with the OC-3 Releases 7.2 and earlier, and 13.0 and later, and OC-12 Releases 7.0 and later, and FiberReach 4.0.

Compatible Modems

A compatible modem must meet the following minimum requirements:

- 300, 1200, 2400, 4800, 9600, or 19,200 baud
- Full duplex
- 8 data bits
- No parity bits
- 1 start bit
- 1 stop bit
- No flow control.

The following stand-alone modems meet the modem requirements and can be used with the DDM-2000 System. *Western Electric*® 103-compatible and 212A-compatible modems are also suitable for use with the DDM-2000 system. This is not an exhaustive list of compatible modems:

- Lucent *Paradyne*® 2224-CEO modem (at 1200 and 2400 baud)
- Lucent *Paradyne* 2224 modem (at 1200 and 2400 baud)
- Lucent *Paradyne* 4024 modem (at 1200 and 2400 baud)
- Lucent *Paradyne* 2296 modem (at 4800 and 9600 baud)
- Hayes *V-series** Smartmodems
- *Penril*† Alliance V.32 modem.

The NCR 3170 computer and the AT&T *Safari*® computer have a built-in modem and meet the modem requirements.

CPro-2000 Graphical User Interface and Provisioning Tool

The CPro-2000 Graphical User Interface and Provisioning Tool is a *Microsoft Windows*‡ based user interface that can optionally be used with the DDM-2000 OC-3 Multiplexer. The tool simplifies and mechanizes administration, maintenance, and provisioning operations for ring networks. CPro-2000 supports DDM-2000 OC-3 Multiplexers, DDM-2000 OC-12 Multiplexers, and FT-2000 OC-48 Lightwave Systems. A minimum platform configuration is:

- 486 SX *IBM*§-compatible desktop or laptop PC

* Trademark of Hayes Microcomputer Products, Inc.

† Registered trademark of Penril Corporation, Inc.

‡ Microsoft is a registered trademark and Windows is a trademark of Microsoft Corporation.

§ IBM is a registered trademark of International Business Machines Corporation.

- 3.5 inch Floppy Disk drive
- 8 Megabyte RAM required (12 Megabyte RAM preferred)
- Hard disk with at least 40 Megabytes of available space
- Serial port (EIA-232-D) — configured as COM1 or COM2
- MS-DOS operating system version 5.0 or later
- Windows NT or Windows 95
- Mouse
- VGA color monitor

CPro-2000 is a software environment based on Microsoft Windows 3.1. Windows NT may also be used, as well as Microsoft Windows 95. CPro-2000 has been tested with AT&T, NCR, IBM, NEC*, and Gateway-2000† personal computers. CPro-2000 has also been tested to work on a SUN‡ SPARC§ station 10 workstation that has a SUNPC3.1 software environment setup on a PC emulator hardware and running Windows in the enhanced mode.

User Panel

The user panel contains red light emitting diodes (LEDs) for CR and MJ alarms, yellow LEDs for MN and PMN alarms, and for abnormal (ABN), far-end activity (FE-ACTY)¶, and near end activity (NE-ACTY) status. These LEDs are used in conjunction with the far-end identification (FE-ID) seven-segment display on the front panel of the adjacent SYSCTL circuit pack to provide CIT-less single-ended operations.

Two green PWR ON LEDs are lighted when the shelf is receiving –48 V power for each of two independent –48 V DC power feeders. A green ACO LED is lighted when the ACO function is active.

The FE SEL test, ACO/TEST, and UPD/INIT pushbuttons are provided to control system operation.

Equipment Indicators

A red LED FAULT indicator is provided on each circuit pack. A green LED ACTIVE indicator is provided on all 1x1 protected circuit packs to indicate which circuit packs are actively carrying traffic.

---

* NEC is a registered trademark of NEC Corporation.

† Gateway 2000 is a trademark of Gateway 2000, Inc.

‡ SUN is a registered trademark of SUN Microsystems, Inc.

§ SPARC is a registered trademark of SPARC International, Inc., licensed exclusively to SUN Microsystems, Inc.

¶ This is not applicable for users of Release 3.0 or later due to the introduction of Target ID Address Resolution Protocol (TARP) for Operations Interworking (OI).

Office Alarms

The office alarms interface is a set of discrete relays that controls office audible and visual alarms. Separate relays handle critical, major, and minor alarms. Each contact closure is rated at 1 A, 60 V maximum. The CR and MJ alarms can be wire-ORed. The critical alarm relays are fail safe against unprotected power failures.

User-Definable Miscellaneous Discrete Environmental Alarms and Controls

The user-definable miscellaneous discrete environmental alarm and control interface allows the DDM-2000 FiberReach Multiplexer to monitor and control collocated equipment at the remote site. At the remote terminal (RT) site, 21 alarm or status environmental inputs can monitor environmental conditions (for example, open door, high temp); these inputs are activated by contact closures. The 15th environmental alarm or status input is provided to monitor the condition of the power shelf and fans at the RT site; this closure is activated by –48 V DC. Four environmental control outputs are provided to control external equipment (for example, pumps or generators). The miscellaneous discrete outputs (control outputs at an RT, alarm/status outputs at a CO) tolerate –60 V maximum open circuit voltage and 35 mA maximum current. Transient voltages up to –135 V are tolerated for up to 1 ms. The miscellaneous discrete inputs provide –48 V nominal (–60 V maximum) open circuit voltage and 2 mA maximum current.

The miscellaneous discrete output closures generated by the optoisolator require external voltage and ground to operate.

TL1/X.25 Interface

A TL1/X.25 interface to a DDM-2000 FiberReach Multiplexer is provided through a host system (for example, a DDM-2000 OC-3 Multiplexer). The DDM-2000 FiberReach Multiplexer host supports a TL1/X.25 interface for communication between local and remote DDM-2000s, and alarm surveillance and provisioning operations systems such as Telcordia Technologies's Network Monitoring and Analysis (NMA) and Operations Systems/Intelligent Network Element (OPS/INE) operations systems. The DDM-2000 OC-3 Multiplexer TL1/X.25 interface is based on Telcordia Technologies TR-TSY-000833, Issue 5.

Lucent 2000 Product Family OI Specifications

Applicable for Release 2.2 only:

Maximum number of NEs per subnetwork	50
Maximum number of alarm groups per subnetwork	255
Maximum number of NEs per alarm group	25
Maximum number of directory services NEs per subnetwork	1

Applicable for Release 4.0:

Maximum number of alarm groups per subnetwork	255
Maximum number of NEs per alarm group	25

NOTE:
DDM-2000 FiberReach 3.0 or later supports large subnetworks of up to 256 NE. Refer to *Lucent Technologies 2000 Product Family Multi-Vendor Operations Interworking Guide,* 824-102-144, for additional information.

Physical Specifications

Wideband Shelf Physical Characteristics

- Dimensions: 9.65 in. H x 9.17 in. W x 13.11 in. D
- Weight (Max.): 20 lb. (9 kg)
- Appearance: Coordinated with other equipment in the Lucent 2000 Product Family.

Network Bay and Cabinet Mounting

The DDM-2000 FiberReach Multiplexer can be mounted in both ED-8C500 and ED-8C501 network bay frames and in 23-inch network bay frames. Up to two shelves (any combination of wideband and narrowband shelves) can be mounted side by side in a carrier assembly. In addition to bay mounting, the DDM-2000 FiberReach Multiplexer can be packaged with other equipment in 51A or 61A cabinets, wall mount enclosures, controlled environment vaults (CEVs), or huts.

Environmental Specifications

Temperature and Humidity

A DDM-2000 FiberReach Multiplexer shelf meets Telcordia Technologies Network Equipment Building System (NEBS) requirements* for use in central office environments without fans.

A heat baffle assembly is required for all applications in a bay frame and for cabinet configurations where thermal environments are specified. The baffle should be installed above and below any DDM-2000 FiberReach shelves. Refer to 363-206-300, *DDM-2000 FiberReach Multiplexer Applications, Planning, and Ordering Guide*, for detailed information on heat baffles in typical bay arrangements.

The DDM-2000 FiberReach Multiplexer operates in uncontrolled environments at temperatures of –40°C to +75°C and humidity of 5 to 95 percent (noncondensing). Forced convection cooling (fans) is required when the air inlet temperature is above 50°C. The DDM-2000 FiberReach Multiplexer provides optional control and alarming of the 2-type fan units used in Lucent cabinets and alarming of the DDM-2000 fan shelf.

EMC Requirements

The DDM-2000 FiberReach Multiplexer has been tested and found to comply with the limits for a Class A digital device, pursuant to Part 15 of the FCC rules. These limits are designed to provide reasonable protection against harmful interference when the equipment is operated in a commercial environment. This equipment generates, uses, and can radiate radio-frequency energy and, if not installed and used in accordance with the instruction manual, may cause harmful interference to radio communications. Operation of this equipment in a residence is likely to cause harmful interference in which case the user will be required to correct the interference at the user's own expense.

Earthquake Requirements

The DDM-2000 FiberReach Multiplexer meets the earthquake requirements defined in Telcordia Technologies TR-NWT-000063, Issue 5 and Pacific Bell Standard PBS-000-102PT. Installations in Zone 4 regions require the ED-8C800-50 or ED-8C801-50 bay frame. Drawing ED-8C800-70 provides ordering and engineering application information for these frames.

Fire Resistance

The DDM-2000 FiberReach Multiplexer meets the ignitability requirements specified in T1Y1.4/88-014. In addition, the DDM-2000 FiberReach Multiplexer meets the fire resistance requirements of *UL*† 1459, 2nd Edition.

---

* "*NEBS Generic Equipment Requirements*," GR-63-CORE, Issue 1, October 1995.

Underwriters Laboratories (*UL*)

The DDM-2000 FiberReach Multiplexer is *UL* listed for restricted access installations in business and customer premises applications installed in accordance with Articles 110-16 and 110-17 of the *National Electric Code*[*], *ANSI*/ NFPA Number 70-87. Other installations exempt from the requirements of the *National Electric Code* may be engineered according to the accepted practices of the local telecommunications utility.

Canadian Standards Association

The DDM-2000 FiberReach Multiplexer has been certified by the Canadian Standards Association per standard C22.2, Number 225-M90.

Power Requirements

Shelf Fuses

Up to four –48 V feeders (A and B) are required for each DDM-2000 FiberReach shelf. Each shelf power is protected by 3-amp fuses provided with the shelf.

Power Dissipation

Table 10-25 lists the power dissipation and current drains for the listed configurations for the wideband shelf. The maximum current drain can be calculated for any configuration by dividing the total power dissipation by 40 V (the minimum battery voltage).

When reviewing Table 10-25, the following items should be noted:

- The DDM-2000 FiberReach wideband shelf accommodates two –48 V power feeders ("A" and "B" office power feeders). The DDM-2000 FiberReach narrowband shelf has two –48 V power feeds.
- Loss of one power feeder does not cause a loss of service.
- All supply voltages other than –48V required by the system are generated by DC-to-DC converters within the system.
- The system meets all performance requirements when the DC input voltage varies between –40.0 V and –60.0 V.
- The system tolerates DC input voltages between 0 V and –60 V without damage.
- The system complies with electrical noise tolerance requirements in Section 13.2 of TR-TSY-000499.

† Registered trademark of Underwriters Laboratories Inc.

* Registered trademark of the National Fire Protection Association, Inc.

Table 10-25. Power Dissipation - Wideband Shelf

Configuration	Power Dissipation		
	with 2 26G2-U	with 2 28-Type	with 29G-U or 29H-U
DDM-2000 FiberReach WBS with 8 BBF3 circuit packs (16 DS1s, 1x1 protected)	41 Watts	44 Watts	48 Watts
DDM-2000 FiberReach WBS with 8 BBF3 circuit packs (28 DS1s, 1x7 protected)	38 Watts	41 Watts	45 Watts
DDM-2000 FiberReach WBS with 8 BBF6 (T1EXT) circuit packs (8 T1EXT, 1x1 protected)	66 Watts	69 Watts	73 Watts
DDM-2000 FiberReach WBS with 8 BBF6 (T1EXT) circuit packs (14 T1EXT, 1x7 protected)	65 Watts	68 Watts	72 Watts
DDM-2000 FiberReach WBS with 3* BBF8 circuit packs (6 HDSL, unprotected)	—	46 Watts	50 Watts
DDM-2000 FiberReach WBS with 8 BBF3 circuit packs (16 DS1s, 1x1 protected) and 2 BBG4B circuit packs	—	50 Watts	54 Watts
DDM-2000 FiberReach WBS with 8 BBF3 circuit packs (28 DS1s, 1x7 protected) and 2 BBG4B circuit packs	—	47 Watts	51 Watts
DDM-2000 FiberReach WBS with 8 BBF6 (T1EXT) circuit packs (8 T1EXT, 1x1 protected) and 2 BBG4B circuit packs	—	75 Watts	79 Watts
DDM-2000 FiberReach WBS with 8 BBF6 (T1EXT) circuit packs (14 T1EXT, 1x7 protected) and 2 BBG4B circuit packs	—	74 Watts	78 Watts
DDM-2000 FiberReach WBS with 3* BBF8 circuit packs (6 HDSL, unprotected) and 2 BBG4B circuit packs	—	52 Watts	56 Watts
DDM-2000 FiberReach WBS with 8 BBF3 circuit packs (16 DS1s, 1x1 protected) and 2 BBG19 circuit packs	—	50 Watts	54 Watts
DDM-2000 FiberReach WBS with 8 BBF3 circuit packs (28 DS1s, 1x7 protected) and 2 BBG19 circuit packs	—	47 Watts	51 Watts
DDM-2000 FiberReach WBS with 8 BBF6 circuit packs (16 DS1s, 1x1 protected) and 2 BBG19 circuit packs	—	75 Watts	79 Watts
* Limited to 3 due to power limitations from a single 28-type.			

CAUTION:
This information is for a typical application only. Consult 801-525-168, DDM-2000 Floor Plan Data Sheets, and T82046-30, Power Systems DC Distribution Circuit for Digital Transmission System, for proper engineering of battery plant and feeders.

Table continued on next page

Configuration	Power Dissipation		
	with 2 26G2-U	with 2 28-Type	with 29G-U or 29H-U
DDM-2000 FiberReach WBS with 8 BBF6 (T1EXT) circuit packs (14 T1EXT, 1x7 protected) and 2 BBG19 circuit packs	—	74 Watts	78 Watts
DDM-2000 FiberReach WBS with 3* BBF8 circuit packs (6 HDSL, unprotected) and 2 BBG19 circuit packs	—	52 Watts	56 Watts
DDM-2000 FiberReach WBS with 2 22D-U circuit packs	—	44 Watts	48 Watts
DDM-2000 FiberReach WBS with 2 BBG4B circuit packs	—	35 Watts	39 Watts
DDM-2000 FiberReach WBS with 2 BBG19 circuit packs	—	35 Watts	39 Watts
DDM-2000 FiberReach WBS with 2 22G4-U circuit packs	—	43 Watts	47 Watts
* Limited to 3 due to power limitations from a single 28-type.			

CAUTION:
This information is for a typical application only. Consult 801-525-168, DDM-2000 Floor Plan Data Sheets, and T82046-30, Power Systems DC Distribution Circuit for Digital Transmission System, for proper engineering of battery plant and feeders.

DDM-2000 FiberReach Multiplexer Reliability

Summary

This section describes the Telcordia Technologies reliability requirements that apply to the DDM-2000 FiberReach Multiplexer and the calculations used to predict how the DDM-2000 FiberReach Multiplexer meets those standards.

The DDM-2000 FiberReach Multiplexer meets all the applicable Telcordia Technologies reliability requirements that cover transmission availability, operation system (OS) availability, optical module maintenance, and infant mortality. A summary of the reliability predictions and requirements is shown in Table 10-26 and Table 10-27. The applicable Telcordia Technologies requirements and objectives were clarified through interactions with Telcordia Technologies during their audit of the DDM-2000 OC-3 Multiplexer. The basis for these requirements comes from TA-TSY-000418, *Generic Reliability Assurance Requirements for Fiber Optic Transport Systems*. The method and assumptions used to calculate DDM-2000 FiberReach Multiplexer reliability predictions are described in the following paragraphs. Each paragraph is devoted to one of the reliability parameters which must meet a Telcordia Technologies requirement or objective.

Transmission Availability

Telcordia Technologies *requirements* state that the probability of a hardware caused outage on a two-way channel within a SONET multiplexer should be less than 1.75 minutes per year in a central office environment* and 5.25 minutes per year in a remote terminal environment.† Telcordia Technologies *objectives* for outages are 0.25 minutes per year for the central office‡ and 0.75 minutes per year for remote terminal environments.§

The outage requirements and objectives apply to any part of the product needed to process an incoming high-speed or low-speed signal (DS1 to OC-1 or OC-1 to DS1). An outage is defined, for this and all other outage requirements, as any 1-second interval with a bit error rate of 10^{-3} or worse.¶ The predicted hardware outages for various configurations of the system are given in Table 10-27.

A Markov model was used to calculate the predicted system outage. The model assumes a mean time to repair of 2 hours for the CO environment and 4 hours for

* TA-NWT-000418, Issue 3, November 1991, p. 17.
† TA-NWT-000418, Issue 3, November 1991, p. 28.
‡ TA-NWT-000418, Issue 3, November 1991, p. 18.
§ TA-NWT-000418, Issue 3, November 1991, p. 28.
¶ TR-TSY-000009, Issue 1, May 1986, p. 4-11.

the RT environment. Individual circuit pack failure rates used in the model were calculated using the method described in TR-TSY-000332, Issue 4, *Reliability Prediction Procedure for Electronic Equipment (RPP)*. A summary of the circuit pack failure rates is shown in Table 10-27.

Operation System Interface Availability

The Telcordia Technologies objective states that the OS outage should be less than 28 minutes per year (50 percent hardware, 50 percent software).* Therefore, the objective applies to the TBOS interface†. This objective applies to circuitry needed to maintain communication from the DDM-2000 Multiplexer to the central office's telemetry equipment for access by an OS. Since the OS interface is used in the central office, the reliability model assumes the mean time to repair is 2 hours and the environmental factor is 1.0. Table 10-26 lists the predicted outages for the TBOS interface.†

Optical Module Maintenance Objective

According to Telcordia Technologies, the objective for mean time between failure (MTBF) of a one-way regenerator is a minimum of four years ‡. A regenerator is defined as any circuit pack that performs the electrical-to-optical and optical-to-electrical conversion. Table 10-27 lists the failure rate and MTBFs of the OLIU circuit packs. All OLIU circuit packs meet Telcordia Technologies objectives.

Infant Mortality

Telcordia Technologies requires that the number of circuit pack failures in the first year of operation should not exceed 2.5 times the number of failures per year beyond the first year. The ratio of first year failures to failures in subsequent years is known as the infant mortality factor (IMF). The requirement is to have an IMF of less than 2.5. §

DDM-2000 FiberReach Multiplexer circuit packs are subjected to an environmental stress-testing (EST) program. The purpose of the program is to eliminate early life failures, conduct failure mode analysis on defective circuit packs, and use corrective action to make the product more reliable. All new circuit pack codes in manufacturing are subjected to EST. However, based on field return data, when the early life failures for any circuit pack codes have been minimal and the IMF is below 2.5, these circuit pack codes may be subjected only to sampling EST.

---

* TA-NWT-000418, Issue 3, November 1991, p. 36.

† Not applicable for Release 3.0 and later.

‡ TA-NWT-000418, Issue 3, November 1991, p. 37.

§ TA-NWT-000418, Issue 3, November 1991, p. 40.

DDM-2000 FiberReach System Reliability Predictions

Table 10-26 and Table 10-27 show the system reliability predictions for the DDM-2000 FiberReach Multiplexer.

Table 10-26. DDM-2000 FiberReach System Reliability Prediction.

	Environment	Telcordia Technologies Criteria (Note 3)		Prediction (Note 4)	
Application	**(Note 2)**	**Requirement**	**Objective**	**Outage (min/yr)**	**MTBF (Yrs)**
Point-to-Point					
DS1 to OC-1	CO	1.75	0.25	0.1657	724
DS1 to OC-1(*)	CO	1.75	0.25	0.0463	2590
DS1 to OC-1	RT	5.25	0.75	0.4971	482
DS1 to OC-1(*)	RT	5.25	0.75	0.1391	1723
DS1 to OC-3	CO	1.75	0.25	0.1657	724
DS1 to OC-3 (*)	CO	1.75	0.25	0.0463	2588
DS1 to OC-3	RT	5.25	0.75	0.4972	482
DS1 to OC-3 (*)	RT	5.25	0.75	0.1394	1719
DS3 to OC-3	CO	1.75	0.25	0.1983	605
DS3 to OC-3 (*)	CO	1.75	0.25	0.0219	5479
DS3 to OC-3	RT	5.25	0.75	0.5953	403
DS3 to OC-3 (*)	RT	5.25	0.75	0.0661	3617
Ring Pass-Through					
OC-3c to OC-3c	CO	none	none	0.00006	1554735
OC-3c to OC-3c	RT	none	none	0.00052	345505
OS Interface					
TBOS **(Note 5**)	CO	—	14.00	4.74	25

*Field replacement rate estimates, based on field CP returns and repairs, are used for the component whose failure is silent service affecting and/or not service affecting.

Notes:

1. Hardware failure rates are calculated per the RPP method, TR-NWT-000332, Issue 4, *Reliability Prediction Procedure*.
2. The environmental factor for the CO = 1.0 and for the RT = 1.5, per TR-NWT-000332, Issue 4, *Reliability Prediction Procedure*.

(Notes continued on next page)

3. Telcordia Technologies criteria (Outage Requirements and Objectives) is based on TA-TSY-000418, Issue 3, *Generic Reliability Assurance Requirements for Fiber Optic Transport Systems*. Outage is in minutes per year.

4. Mean time to repair is assumed to be two hours for the CO and four hours for RT environments.

5. Not applicable for Releases 3.0 and later.

Table 10-27. DDM-2000 FiberReach Circuit Pack Reliability

	Central Office		Remote Terminal	
Circuit Pack	**FITS (Note 2)**	**MTBF (Years)**	**FITS (Note 2)**	**MTBF (Years)**
BBF1B (DS1)	859	132.8	1289	88.5
BBF3 (DS1PM)	1310	87.1	1965	58.1
BBF3B (DS1PM)	1235	92.4	1853	61.6
BBG4 (DS3)	902	126.5	1353	84.3
BBG4B (DS3)	1056	108.0	1584	72.0
BBF6 (T1EXT)	1427	79.9	2141	53.3
BBF8 (HDSL)	5216	21.9	7824	14.6
BBG8B (SYSCTL)	4442	25.7	6663	17.1
BBG19 (DS3)	729	156.5	1094	104.3
22D-U (IS-3 OLIU)	2388	47.80	3582	31.87
22F (OC-3 OLIU)	2441	46.7	3662	31.2
22F-U (OC-3 OLIU)	2519	45.3	3779	30.2
22F2-U (OC-3 OLIU)	2033	56.1	3050	37.4
22G-U (OLIU)	2880	39.64	4320	26.42
22G2-U (OLIU)	2197	51.9	3296	34.6
22G3-U (OLIU)	3533	32.3	5300	21.5
22G4-U (OLIU)	1426	80.05	2139	53.37
26G2-U (OLIU)	2575	44.3	3863	29.5
28G-U (OLIU)	3860	29.6	5790	19.7
28G2-U* (OLIU)				
29G-U (OLIU)	3264	34.9	4896	23.3
29H-U (OLIU)	3049	37.4	4574	24.9

* Information not available at time of document release.

Notes:

1. Calculations are based on Telcordia Technologies RPP Issue 4 data. All KS and Lucent components considered as quality level III. All components evaluated at 40°C ambient and 50 percent electrical stress.

2. FITS is the number of failures per billion hours of operation (10^9).

DDM-2000 Narrowband Shelf Specifications

Physical Specifications

Narrowband Shelf Physical Characteristics

- Dimensions: 9.65 in. H x 8.03 in. W x 11.93 in. D
- Weight (Max.): 20 lb. (9 kg)
- Appearance: Coordinated with other equipment in the Lucent 2000 Product Family

Power Requirements

Shelf Fuses

Up to four –48 V feeders (A and B) are required for each DDM-2000 FiberReach shelf. Each shelf power is protected by 3-amp fuses provided with the shelf.

Power Dissipation

Table 10-28 lists the power dissipation and current drains for the listed configurations for the narrowband shelf. The maximum current drain can be calculated for any configuration by dividing the total power dissipation by 40 V (the minimum battery voltage).

Table 10-28. Power Dissipation - Narrowband Shelf

Configuration	Power Dissipation
DDM-2000 FiberReach NBS with DSXBIU, CDTU, RGU, and PCU (No Channel Units)	14 Watts*
Maximum power available to CUs in narrowband shelf. This power is allocated among different CUs based on the following data for power requirement per channel unit.‡ SPQ909 - 4.0 Watts AUA159C - 3.2 Watts AUA94 - 1.7 Watts AUA58C - 3.1 Watts AUA53 - 1.9 Watts AUA150 - 3.3 Watts SPQ400 -6.0 Watts SPQ440B - 6.1 Watts SPQ443 - 6.5 Watts SPQ494 - 4.7 Watts§	37 Watts†
See footnotes at end of table.	

* When the DDM-2000 FiberReach is configured to include a wideband shelf and a narrowband shelf, this power requirement as well as the power requirement for specific channel units and the appropriate wideband shelf configuration should be added to get the total power requirement.

† This number must be added to the power requirement for the narrowband shelf without channel units to obtain the total power requirements for the narrowband shelf.

‡ Other channel units can be used, but the total power requirements must not exceed 37 watts for an enclosed cabinet. However, 82 watts is allowed for a shelf with a heat baffle. These numbers assume all lines off hook simultaneously. A more typical power drain is about one third of the stated drain: equal to a traffic rate of 12.2.us.

§ The SPQ494 channel unit (Quad ISDN) consumes 4.2 watts of power. However, a maximum of eight SPQ494 channel units can be installed in specified physical slots of the narrowband shelf, due to the limit of DSOs carried by the four DS1 links to the host.

CAUTION:
This information is for a typical application only. Consult 801-525-168, DDM-2000 Floor Plan Data Sheets, and T82046-30, Power Systems DC Distribution Circuit for Digital Transmission System, for proper engineering of battery plant and feeders.

Terminal-to-Terminal Voice-Frequency Transmission

The CUs used in the central office terminal (COT) and MSDT determine the voice-frequency (VF) transmission characteristics. The specifications for POTS, *SPOTS*®, and coin CUs are given in Table 10-29. Table 10-30 lists the specifications for multiparty and frequency selective ringing (FSR) CUs. Specifications for the dual ringing repeater channel unit are listed in Table 10-31. Table 10-32 lists the specifications for 2- and 4-wire special services. Table 10-33, Table 10-34, Table 10-35, and Table 10-36 list the specifications for quad POTS/ *SPOTS* CUs. Table 10-37 and Table 10-38 list the specifications for the *SPQ*909 LP-POTS channel units.

Table 10-29. Transmission Specifications - VF Channel Units with Fixed Settings

	Value (Measured at 25° C)		
Parameter	**POTS**	***SPOTS*® Unit**	**Coin**
Loop Resistance (Beyond the HDT excluding the set)	0-1500 Ω	CSA Loops	0-1500 Ω
Loop Current	> 20 mA	> 23 mA	
1,000-Hz Loss (±0.5dB typical, ±1.0dB max)	1 dB (R_{EXT} ≤ 1,100 ±100) * 0 dB (R_{EXT} ≥ 1,100 ±100) *	0 dB †	
Bandwidth (Relative to the 1,000-Hz loss)	0 to –3.0 dB at 300 Hz and 3,000 Hz 0 to –1.5 dB at 400 Hz and 2,800 Hz		
Return Loss at the COT ‡	ERL ≥ 18 dB, SRL ≥ 12 dB		
Return Loss at the HDT §	ERL ≥ 18 dB, SRL ≥ 15 dB		
Idle Channel Noise (at the HDT)	20 dBrnC Maximum		
Signal-to-Distortion Ratio (at –10 dBm)	> 33 dB		
Dial Pulse Distortion [Peak to Average Ratio (PAR)]	> 90		
Gain Tracking (1,004 Hz) –37 dBm0 to +3 dBm0 –50 dBm0 to –37 dBm0	 ±0.5 dB Maximum (±0.25 dB Average) ±1.0 dB Maximum (±0.5 dB Average)		
See footnotes at end of table.		***Continued on next page***	

Table 10-29. Transmission Specifications — VF Channel Units with Fixed Settings — *Continued*

	Value (Measured at 25° C)		
Parameter	**POTS**	***SPOTS*® Unit**	**Coin**
Intermodulation Distortion (–13 dBm0 Input)	A-B (R2) Product: > 43 dB 2A-B (R3) Product: > 44 dB		
Single Frequency Distortion (0-12 kHz 0 dBm0)	< –28 dBm0		
Impulse Noise ¶	≤ 15 Counts in 15 Minutes		
Overload at COT and HDT	≥ + 3 dBm0		
Longitudinal Balance at the HDT ** (Minimum)	200 Hz, 500 Hz, 1,000 Hz: ≥ 58 dB 3,000 Hz: ≥ 53 dB		

* Measured as insertion loss between 900-ohm terminations. R_{EXT} includes both the loop resistance and the station set resistance. Actual threshold value for R_{EXT} is 1100 ohms ±100 ohms.

† Measured as the ICL with the HDT terminated in 600 ohms and with the COT terminated in 900 ohms.

‡ Measured with respect to 900 ohms and 2.16 µF with the 4-wire path broken or with the other end terminated in 1,100 ohms in parallel with 0.03 µF.

§ Measured with respect to 600 ohms and 2.16 µF with the 4-wire path broken or with the other end terminated in 900 ohms and 2.16 µF.

¶ Measured with a holding tone of –13 dBm0 and a threshold of 59 dBrnC0.

** Measured by Institute of Electrical and Electronics Engineers (IEEE) method 455-1976.

Table 10-30. Transmission Specifications — Multiparty and FSR Channel Units

	Value (Measured at 25° C)	
Parameter	**Multiparty****	**FSR**
Loop Resistance (Beyond the HDT excluding the set)	0-1500 Ω	0-900 Ω
1,004 Hz On-Hook Loss	≤ 5 dB over 1004 Hz Off-Hook Loss	On-hook transmission not supported
Loop Current	> 20 mA	
1000-Hz Loss (±0.5 dB typical, ±1.0 dB max)	1 dB	
Bandwidth (Relative to the 1,004-Hz loss) *	–0.5 to +1.0 dB at 400 Hz and 2,800 Hz	
Return Loss at the COT †	ERL ≥ 18 dB, SRL ≥ 10 dB	
Return Loss at the HDT ‡	ERL ≥ 18 dB, SRL ≥ 10 dB	
Idle Channel Noise (at the HDT)	20 dBrnC Maximum	
Signal-to-Distortion Ratio (at –10 dBm)	> 33 dB	
Dial Pulse Distortion [Peak to Average Ratio (PAR)]	> 90	
Gain Tracking (1,004 Hz) –37 dBm0 to +3 dBm0 –50 dBm0 to –37 dBm0	 ±0.5 dB Maximum (± 0.25 dB Average) ± 1.0 dB Maximum (± 0.5 dB Average)	
Intermodulation Distortion (–13 dBm0 Input)	A-B (R2) Product: > 43 dB 2A-B (R3) Product: > 44 dB	
Single Frequency Distortion (0-12 kHz 0 dBm0)	< –28 dBm0	
Impulse Noise §	≤ 15 Counts in 15 Minutes	
See footnotes at end of table.	***Continued on next page***	

Table 10-30. Transmission Specifications — Multiparty and FSR Channel Units—*Continued*

	Value (Measured at 25° C)	
Parameter	**Multiparty****	**FSR**
Overload at COT and HDT	≥ + 3 dBm0	
Longitudinal Balance at the HDT (Minimum)¶	200 Hz, 500 Hz, 1,000 Hz: ≥ 58 dB 3,000 Hz: ≥ 53 dB	

* Measured with a signal level of 0 dBm0. + means more loss, – means less loss.

† Measured with respect to 900 ohms and 2.16 μF and with 900 ohms in series with 2.16 μF in parallel with a hold coil at the HDT.

‡ Measured with respect to 900 ohms in series with 2.16 μF with a hold coil at the HDT and with –48 V battery feed terminated with 900 ohms in series with 2.16 μF at the COT.

§ Measured with a holding tone of –13 dBm0 at a threshold of 59 dBrnC0.

¶ Measured by IEEE Method 455-1976.

** MSDT does not support positive ringing.

Table 10-31. Transmission Specifications — AUA45 Dual Ringing Repeater Channel Unit

Parameter	Value (Measured at 25° C)
Loop Design	The AUA45 channel unit is not limited to CSA design rules. Maximum cable loss should not exceed 9 dB, split in any proportion between the two end cable links. Total combined loop resistance (not including the terminating equipment) should not exceed 1500 ohms.
Structural Impedance	900 ohms +2.16 µF
Balance Impedance	900 ohms +2.16 µF
1,000-Hz Loss * (± 0.5 dB typical, ±1.0 dB max)	0 dB or 3 dB (switch selectable)
Bandwidth (Relative to the 1000-Hz loss)	+1 to –0.5 dB at 400 Hz and 2,800 Hz
Return Loss† (end-to-end)	ERL ≥ 26 dB, SRL ≥ 20 dB
Idle Channel Noise ‡	20 dBrnC Maximum
Signal-to-Distortion Ratio (at –10 dBm)	> 33 dB
Peak to Average Ratio (PAR) (dial pulse distortion) at –13 dBm	> 90
Gain Tracking (1,004 Hz) –37 dBm0 to +3 dBm0 –50 dBm0 to –37 dBm0	 ± 0.5 dB Maximum ±1.0 dB Maximum
Intermodulation Distortion (–13 dBm0 Input)	A-B (R2) Product: > 43 dB 2A-B (R3) Product: > 44 dB
Single Frequency Distortion (0-12 kHz 0 dBm0)	< –28 dBm0
Impulse Noise at 47 dBrnC0	≤ 15 Counts in 15 Minutes
Overload at COT and HDT	at + 3 dBm0 is ≤ 0.5 dB compression
See footnotes at end of table.	***Continued on next page***

Table 10-31. Transmission Specifications — AUA45 Dual Ringing Repeater Channel Unit—*Continued*

Parameter	Value (Measured at 25° C)
Longitudinal Balance at the HDT (Minimum)¶	200 Hz, 500 Hz, 1,000 Hz: ≥ 58 dB 3,000 Hz: ≥ 53 dB
Equal-Level Cross talk	Better than –65 dB (200 Hz to 3,400 Hz)
* Measured as insertion loss between 900-ohm terminations. † Measured with respect to 900 ohms and 2.16 μF with the opposite end terminated in 900 ohms in series with 2.16 μF. ‡ Measured with 900-ohm terminations on both ends. ¶ Measured with IEEE method 455-1976.	

Table 10-32. Transmission Specifications — VF Channel Units with Adjustable Settings

Parameter	**2-Wire E *SPOTS*® CUs(AUA42, AUA43)**	**4-Wire CUs (AUA41, AUA44, AUA54)**
Loop Resistance (beyond HDT, excluding telset)	CSA loops	0-2800 ohms (loop start, ground-start) 0-5000 ohms (DX)
Gain Range (Granularity)		
Metallic Interface to digital line	–1.0 dB to 6.75 dB (in 0.25-dB steps)	Range depends on function code
Digital line to metallic interface	–8.0 dB to 1.5 dB (in 0.25-dB steps)	Granularity = 0.1 dB
Gain Tracking		
Input –37 to +3 dBm	± 0.25 dB	± 0.25 dB
Input –50 to –37 dBm	± 0.50 dB	± 0.50 dB
Equalization	(Slope type) Equalized CSA cable roll-off at 0.4 kHz varies from 0.0 dB to 1.1 dB; at 2.8 kHz, roll-off varies from 0.3 dB to 1.75 dB	Post-equalization of cable less than 15 dB (H88) or 18 kft (NL) is comparable to D4 4FXS CU (J98726SB). Pre-equalization and post-equalization available by emulating 150-ohm mismatch.
Structural Impedance	600 ohms + 2.16 µF or 900 ohms + 2.16 µF	600 ohms or 1200 ohms
ERL/SRL (2-wire return loss with 4-wire path broken)	28/20 dB	
RL (any Hz) / RL (1 kHz)		23/28 dB
Balance Capability, CSA loops	ERL better than 12 dB at digital line interface of channel unit facing loop	—
Longitudinal Balance (IEEE method)		
	AUA42 AUA43	
200 Hz	63 dB 58 dB	67 dB
500 Hz	63 dB 58 dB	67 dB
1,000 Hz	63 dB 58 dB	67 dB
	Continued on next page	

Table 10-32. Transmission Specifications — VF Channel Units with Adjustable Settings—*Continued*

Parameter	**2-Wire E *SPOTS*® CUs(AUA42, AUA43)**	**4-Wire CUs (AUA41, AUA44, AUA54)**
3,000 Hz	58 dB 58 dB	62 dB
Equal-Level Cross talk, C-message weighted between 0.2 and 3.4 kHz	–65 dB	–65 dB (channel unit) –65 dB (interunit cross talk)
Idle-Channel Noise	23 dBrnc0 for AUA42/ AUA43 pair	20 dBrnc0 per channel unit, each direction
Impulse Noise, no more than 15 counts in 15 minutes at	59 dBrnc0	59 dBrnc0
Signal Distortion (at –10 dBm)	> 33 dB	> 33 dB
Single-Frequency distortion 0 dBm0 input tone at any frequency from 0 to 12 kHz	–28 dBm0 for AUA42/ AUA43 pair	–28 dBm0 per channel unit
Intermodulation Distortion (IM), –13 dBm0 input (IM products)	A-B (R2) < –43 dB 2A-B (R3) < –44 dB	R2 < –49 dB R3 < –51 dB
Pulse Distortion [Peak to Average Ratio (PAR)]	not less than 90	not less than 94

Table 10-33. *SPQ*®400 Electrical and Transmission Specifications

Parameter	Value
Loop Resistance (excluding telset)	0 Ω to 900 Ω
Loop Current	20 mA (900 Ω loop) to 30 mA (0 Ω loop)
VF loss, off-hook, between CO and network interface (NIF) at customer location	4 to 8 dB
Nominal 1,000-Hz loss, *SPQ400* only: 0 Ω tip-to-ring 900 Ω loop resistance	 6.0 dB 1.4 dB
VF loss, on-hook, between CO and NIF at customer location	9 dB to 13 dB
Return loss at COT (reference Z of 900 Ω + 2.16 μF, terminated with 900 Ω + 2.16 μF)	ERL > 18 dB SRL > 10 dB
Return loss at RT (reference Z of 900 Ω + 2.16 μF, CO terminated with 900 Ω + 2.16 μF)	ERL > 18 dB SRL > 10 dB
Structural impedance	900 Ω + 2.16 μF
Minimum longitudinal balance (measured by IEEE Method 455-1976)	200 Hz to 1,000 Hz: ≥ 58 dB 3,000 Hz: ≥ 53 dB
Idle channel noise, end-to-end	≤ 20 dBrnC
Frequency response (loss relative to 1,004 Hz) End-to-end *SPQ*400 only (1/2 channel)	 400 Hz to 2,800 Hz: –0.5 dB to +1 dB 3200 Hz: –0.5 dB to +1.5 dB 300 Hz and 3,400 Hz: –0 dB to +3 dB 400 Hz to 2800 Hz: –0.25dB to + 0.5 dB 3,200 Hz: –0.25|dB to +0.75 dB 300 Hz and 3,400 Hz: –0 dB to +1.5 dB
	Continued on next page

Table 10-33. *SPQ*®400 Electrical and Transmission Specifications — *Continued*

Parameter	Value
60-Hz Rejection	> 20 dB
Cross talk (0-dBm0 input, 200 Hz to 3,400 Hz)	≤ –65 dBm0
Impulse noise at a threshold of 47 dBrnCO for 15 minutes	≤ 15 counts
Data pulse distortion (PAR)	
- End-to-end	> 90
- *SPQ*400 only (1/2 channel)	≥ 94
Single frequency distortion with input of:	
- 0 Hz to 12 kHz, 0 dBm0	< –28 dBm0 at 0 Hz to 12 kHz
- 1,004 Hz to 1020 kHz, 0 dBm0	< –40 dBm0 at 0 Hz to 4,000 Hz
Signal-to-distortion with input of:	
- 0 dBm0 to –30 dBm0	> 33 dB
- –30 dBm0 to –40 dBm0	> 27 dB
- –40 dBm0 to –45 dBm0	> 22 dB
System generated tones 0 Hz < f < 16 kHz	< –50 dBm0
Gain tracking at 1,004 Hz, relative to 0 dBm0	
- –37 dBm0 to +3 dBm0	±0.5 dB maximum (±0.25 dB average)
- –50 dBm0 to –37 dBm0	±1.5 dB maximum (±0.5 dB average)

Table 10-34. *SPQ*®400 Environmental Specifications

Temperature Range (Ambient)	
Operating	–40° to 85°C (–40° to 185°F)
Storage	–40° to 85°C (–40° to 185°F)
Relative Humidity, Noncondensing	
5% to 95%	

Table 10-35. *SPQ*®440 Electrical and Transmission Specifications

	Value	
Parameter	**POTS**	**Special Services**
Loop resistance (excluding telset)	0 to 900 Ω	CSA
Loop current	20 mA to 30 mA	25 mA to 30 mA
VF loss, off-hook, between CO and network interface (NIF) at customer location	4 to 8 dB	2 to 5 dB
Nominal 1,000Hz loss, *SPQ440* only: 0 Ω tip-to-ring Maximum loop resistance	 6.0 dB 1.4 dB	 3.4 dB 0 dB
VF loss, on-hook, between CO and NIF at customer location	9 dB to 13 dB	7 dB to 12 dB
Return loss at COT (reference Z of 900 Ω + 2.16 μF, terminated with 900 Ω + 2.16 μF for POTS or TR-57 CSA test loops for special services)	ERL > 18 dB SRL > 10 dB	ERL > 10 dB SRL > 5 dB
Return loss at RT (reference Z of 600 Ω + 2.16 μF, CO terminated with 900 Ω + 2.16 μF)	ERL > 22 dB SRL > 14 dB	ERL > 22 dB SRL > 14 dB

Continued on next page

Table 10-35. *SPQ*®440 Electrical and Transmission Specifications — *Continued*

Parameter	Value
	POTS and Special Services
Structural Impedance	600 ohms + 2.16 μF
Minimum longitudinal balance (measured by IEEE Method 455-1976)	200 Hz to 1,000 Hz: ≥ 58 dB 3,000 Hz: ≥ 53 db
Idle channel noise, end-to-end	≥ 20 dBrnC
Frequency Response (Loss Relative to 1,004 Hz)	
End-to-end	400 Hz to 2,800 Hz: –0.5 dB to +1 dB
	3,200 Hz: –0.5 dB to +1.5 dB
	300 Hz and 3,400 Hz: –0 dB to +3 dB
*SPQ*440 only (1/2 channel)	400 Hz to 2,800 Hz: –0.25 dB to + 0.5 dB
	3,200 Hz: –0.25 dB to +0.75 dB
	300 Hz and 3,400 Hz: –0 dB to +1.5 dB
60 Hz Rejection	> 20 dB
Cross talk (0 dBm0 input, 200 Hz to 3,400 Hz)	≤ –65 dBm0
Impulse noise at a threshold of 47 dBrnCO for 15 minutes	≤ 15 counts
Data pulse distortion (PAR)	
End-to-end	> 90
*SPQ*440 only (1/2 channel)	≥ 94
Single frequency distortion with input of:	
0 Hz to 12 kHz, 0 dBm0	< –28 dBm0 at 0 Hz to 12 kHz

Continued on next page

Table 10-35. *SPQ*®440 Electrical and Transmission Specifications — *Continued*

Parameter	Value
1,004 Hz to 1020 kHz, 0 dBm0	< –40 dBm0 at 0 Hz to 4,000 Hz
Signal-to-distortion with input of:	
0 dBm0 to –30 dBm0	> 33 dB
–30 dBm0 to –40 dBm0	> 27 dB
–40 dBm0 to –45 dBm0	> 22 dB
System generated tones 0 Hz < f < 16 kHz	< –50 dBm0
Gain tracking at 1,004 Hz, relative to 0 dBm0:	
–37 dBm0 to +3 dBm0	±0.5 dB maximum (±0.25 dB average)
–50 dBm0 to –37 dBm0	±1.5 dB maximum (±0.5 dB average)

Table 10-36. *SPQ*®440 Environmental Specifications

Temperature Range (Ambient)	
Operating	–40° to 85°C (–40° to 185°F)
Storage	–40° to 85°C (–40° to 185°F)
Relative Humidity, Noncondensing	
5% to 95%	

Table 10-37. *SPQ*®909 Electrical and Transmission Specifications

Parameter	Value
DC Supervisory Range (including telset)	450 Ω
Loop Resistance (up to 500 ft. of AWG 22)	0 Ω to 20 Ω
Loop Current	20 mA to 25 mA
Nominal 1,000-Hz VF loss off-hook between CO and RT CUs *SPQ*909 alone	4 dB 4 dB
Nominal 1,000-Hz VF loss off-hook between RT CUs and CO *SPQ*909 alone	2 dB 2 dB
Nominal 1,000-Hz VF loss on-hook between CO and RT CUs *SPQ*909 alone	5.5 dB 4 dB
Nominal 1,000-Hz VF loss on-hook between RT CUs and CO *SPQ*909 alone	3.5 dB 2 dB
Return loss at COT (reference Z of 900 Ω + 2.16 μF, RT terminated with 600 Ω)	ERL > 18 dB SRL > 10 dB
Return loss at RT (reference Z of 600 Ω, CO terminated with 900 Ω + 2.16 μF)	ERL > 26 dB SRL > 21 dB
Hybrid Balance of *SPQ*909 (RT terminated with 600 Ω)	ERL > 26 dB SRL > 21 dB

Continued on next page

Table 10-37. *SPQ*®909 Electrical and Transmission Specifications — *Continued*

Parameter	Value
Output impedance (structural impedance, hybrid impedance)	600 Ω
Minimum longitudinal balance (measured by IEEE Method 455-1985)	200 Hz to 1,000 Hz: ≥ 45 dB 3,000 Hz: ≥ 40 dB
Idle channel noise, end-to-end	≤ 20 dBrnC
Frequency response (loss relative to 1,004 Hz)	
End-to-end	300 Hz to 3,000 Hz: –0.5 dB to +1 dB 3,200 Hz: –0.5 dB to +1.5 dB
*SPQ*909 alone	300 Hz to 3000 Hz: –0.25 dB to + 0.5 dB 3200 Hz: –0.25 dB to +0.75 dB
60-Hz Rejection (loss relative to 1,004 Hz)	> 20 dB
Cross talk (0 dBm0 input, 200 Hz to 3,400 Hz)	–65 dBm0
Impulse noise at a threshold of 47 dBrnCO for 15 minutes	≤ 15 counts
Data pulse distortion (PAR)	
End-to-end	> 90
*SPQ*909 alone	≥ 94
Single frequency distortion with input of:	
0 Hz to 12 kHz, 0 dBm0	< –28 dBm0 at 0 Hz to 12 kHz
1,004 Hz to 1,020 kHz, 0 dBm0	< –40 dBm0 at 0 Hz to 4000 Hz
Signal-to-distortion with input of:	
0 dBm0 to –30 dBm0	> 33 dB
–30 dBm0 to –40 dBm0	> 27 dB
–40 dBm0 to –45 dBm0	> 22 dB

Continued on next page

Table 10-37. *SPQ*®909 Electrical and Transmission Specifications — *Continued*

Parameter	Value
System generated tones 0 Hz < f < 16 kHz	< –50 dBm0
Gain tracking at 1004 Hz, relative to 0 dBm0:	
–37 dBm0 to +3 dBm0	±0.5 dB maximum (±0.25 dB average)
–50 dBm0 to –37 dBm0	±1.5 dB maximum (±0.5 dB average)
–55 dBm0 to –50 dBm0	±3.0 dB maximum (±1.5 dB average)

Table 10-38. *SPQ*®909 Environmental Specifications

Temperature Range (Ambient)	
Operating	–40° to 85°C (–40° to 185°F)
Storage	–40° to 85°C (–40° to 185°F)
Relative Humidity, Noncondensing	
5% to 95%	

Commands and Reports

11

Contents

Overview	11-1
Command Page Format	11-1
Input Format	11-2
Addresses	11-3
Command and Prompt Mode	11-7
Special Control Characters	11-8
Paged Reports	11-8
Confirmation Requests	11-9
Output Descriptions	11-9
Alarm Level Prompt	11-9
Security	11-9
Commands Menu	11-11
Starting a CIT Session	11-16
CPro-2000	11-16

Commands

APPLY	Apply New Software	11-17
CPY-PROG	Copy Program	11-25
DLT-CRS-STS1	Delete Cross-Connection STS-1	11-31
DLT-CRS-STS3c	Delete Cross-Connection STS-3c	11-33
DLT-CRS-VT1	Delete Cross-Connection VT1.5	11-36
DLT-ULSDCC-L4	Delete Upper Layer Section DCC - Layer 4	11-40
ENT-CRS-STS1	Enter Cross-Connection STS-1	11-43
ENT-CRS-STS3c	Enter Cross-Connection STS-3c	11-46
ENT-CRS-VT1	Enter Cross-Connection VT1.5	11-50
ENT-TL1MSGMAP	Enter TL1 Message Map	11-58
ENT-ULSDCC-L3	Enter Upper Layer Section DCC - Layer 3	11-61
ENT-ULSDCC-L4	Enter Upper Layer Section DCC - Layer 4	11-65
?	Help	11-73

Contents

INIT-PM	Initialize Performance Monitoring	11-74
INIT-SYS	Initialize System	11-75
INS-PROG	Install Program	11-81
LOGOUT	Logout	11-88
OPR-ACO	Operate Alarm Cutoff	11-89
OPR-LPBK-T1	Operate Loopback T1	11-90
OPR-LPBK-T3	Operate Loopback T3	11-95
RESET	Reset	11-99
RLGN	Remote Login	11-101
RLS-LPBK-T1	Release Loopback T1	11-105
RLS-LPBK-T3	Release Loopback T3	11-107
RSTR-PASSWD	Restore Logins, Passwords, & User Types	11-108
RTRV-ALM	Retrieve Alarm & Status Conditions	11-111
RTRV-ATTR-ALM	Retrieve Attribute Alarm	11-112
RTRV-ATTR-CONT	Retrieve Attribute Control	11-114
RTRV-ATTR-ENV	Retrieve Attribute Environment	11-116
RTRV-CRS-STS1	Retrieve Cross-Connection STS-1	11-118
RTRV-CRS-STS3c	Retrieve Cross-Connection STS-3c	11-120
RTRV-CRS-VT1	Retrieve Cross-Connection VT1.5	11-122
RTRV-EQPT	Retrieve Equipment	11-125
RTRV-FEAT	Retrieve Feature	11-129
RTRV-FECOM	Retrieve Far End Communications	11-130
RTRV-HSTY	Retrieve History	11-132
RTRV-LGN	Retrieve Login	11-133
RTRV-LINK	Retrieve Link	11-136
RTRV-MAP-NEIGHBOR	Retrieve Map Neighbor	11-138
RTRV-MAP-NETWORK	Retrieve Map Network	11-143
RTRV-NE	Retrieve Network Element	11-146
RTRV-OC1	Retrieve OC-1	11-151
RTRV-OC3	Retrieve OC-3	11-153
RTRV-OC12	Retrieve OC-12	11-156
RTRV-PASSWD	Retrieve Passwords	11-159
RTRV-PM-LINE	Retrieve Performance Monitoring Line	11-161
RTRV-PM-SECT	Retrieve Performance Monitoring Section	11-164
RTRV-PM-STS1	Retrieve Performance Monitoring STS-1	11-167
RTRV-PM-T1	Retrieve Performance Monitoring T1	11-170
RTRV-PM-T3	Retrieve Performance Monitoring T3	11-174
RTRV-PM-TCA	Retrieve Performance Monitoring TCA	11-178
RTRV-PM-VT1	Retrieve Performance Monitoring VT1.5	11-182
RTRV-PMTHRES-LINE	Retrieve Performance Monitoring Threshold Line	11-185
RTRV-PMTHRES-SECT	Retrieve Performance Monitoring Threshold Section	11-187
RTRV-PMTHRES-STS1	Retrieve Performance Monitoring Threshold STS-1	11-188
RTRV-PMTHRES-T1	Retrieve Performance Monitoring Threshold T1	11-190
RTRV-PMTHRES-T3	Retrieve Performance Monitoring Threshold T3	11-194
RTRV-PMTHRES-VT1	Retrieve Performance Monitoring Threshold VT1.5	11-198
RTRV-SECU	Retrieve Security	11-200

Contents

RTRV-STATE-EQPT	Retrieve State Equipment	11-204
RTRV-STATE-PATH	Retrieve State Path	11-208
RTRV-STATE-STS1	Retrieve State STS1	11-211
RTRV-STATE-VT1	Retrieve State VT1.5	11-214
RTRV-STS1	Retrieve STS-1	11-217
RTRV-SYNC	Retrieve Synchronization	11-220
RTRV-TRACE-STS1	Retrieve Path Trace STS-1	11-226
RTRV-T1	Retrieve T1	11-229
RTRV-T3	Retrieve T3	11-232
RTRV-TL1MSGMAP	Retrieve TL1 Message Map	11-236
RTRV-ULSDCC-L3	Retrieve Upper Layer Section DCC, Layer 3	11-238
RTRV-ULSDCC-L4	Retrieve Upper Layer Section DCC, Layer 4	11-241
RTRV-VT1	Retrieve VT1.5	11-247
SET-ATTR-ALM	Set Attribute Alarm	11-249
SET-ATTR-CONT	Set Attribute Control	11-251
SET-ATTR-ENV	Set Attribute Environment	11-253
SET-DATE	Set Date	11-255
SET-FEAT	Set Feature	11-257
SET-FECOM	Set Far End Communications	11-260
SET-LGN	Set Login	11-263
SET-LINK	Set Link	11-272
SET-NE	Set Network Element	11-273
SET-OC1	Set OC-1	11-278
SET-OC3	Set OC-3	11-280
SET-OC12	Set OC-12	11-284
SET-PASSWD	Set Password	11-287
SET-PMTHRES-LINE	Set Performance Monitoring Threshold Line	11-291
SET-PMTHRES-SECT	Set Performance Monitoring Threshold Section	11-295
SET-PMTHRES-STS1	Set Performance Monitoring Threshold STS-1	11-296
SET-PMTHRES-T1	Set Performance Monitoring Threshold T1	11-299
SET-PMTHRES-T3	Set Performance Monitoring Threshold T3	11-304
SET-PMTHRES-VT1	Set Performance Monitoring Threshold VT1.5	11-311
SET-SECU	Set Security	11-313
SET-STATE-STS1	Set State STS1	11-319
SET-STATE-T1	Set State T1	11-322
SET-STATE-T3	Set State T3	11-324
SET-STATE-VT1	Set State VT1.5	11-326
SET-STS1	Set STS-1	11-329
SET-SYNC	Set Synchronization	11-332
SET-T1	Set T1	11-337
SET-T3	Set T3	11-342
SET-TRAACE-STS1	Set Path Trace STS-1	11-347
SET-VT1	Set VT1.5	11-351
SWITH-FUNCTION	Switch Function	11-354

Contents

SWITCH-LS	Protection Switch Low Speed	11-356
SWITCH-PATH-STS1	Switch Path STS-1	11-360
SWITCH-PATH-VT1	Switch Path VT1.5	11-364
SWITCH-SYNC	Protection Switch Synchronization	11-367
TEST-ALM	Test Office Alarm	11-371
TEST-LED	Test LED Indicators	11-373
TEST-SYSCTL	Test System Controllers	11-374
TEST-TRMSN-T1	Test Transmission T1	11-376
TEST-TRMSN-T3	Test Transmission T3	11-381
TOGGLE (Ctl-T)	Toggle	11-386
UPD	Update	11-388

Detailed Alarm and History Reports

Introduction	11-393
RTRV-ALM	11-394
RTRV-HSTY	11-415

Commands and Reports

11

Overview

This chapter describes the command and report features of the American Standard Code for Information Interchange (ASCII) terminal interface to a DDM-2000 FiberReach Multiplexer. It provides detailed information about each command, as well as system report outputs and explanations.

Reason for Reissue

This chapter has been updated to provide the details of software commands for FiberReach Release 4.0. This release features the 29G-U OC-12 OLIU circuit pack , which provides OC-12 optics on the DDM-2000 FiberReach shelf. FiberReach Release 4.0 offers Target ID Address Resolution Protocol (TARP), which provides for multi-vendor interworking. For additional information on TARP, please refer to the “About This Document” sections.

Command Page Format

This chapter includes DDM-2000 commands that are presented as one- or multiple-page entires in alphabetical order. The name of each command appears at the top of each page.

Each entry is presented in a common format:

— The **NAME** part gives the name of the command and summarizes its funtion.

— The **INPUT FORMAT** provides the syntax for each command. Each command starts with a command name followed by a colon. Parameters follow the colon. Optional parameters are enclosed in square brackets [ ].

— The **DESCRIPTION** part provides detailed information about each command.

— The **RELATED COMMANDS** part identifies commands that affect or are affected by the named command or sets the conditions displayed by a report. Some commands are not affected by any other command and will not have this part included on the command page.

Entries which are to be typed exactly as shown are printed in **`bold`** type. System repsonses are printed in `courier` type. Descriptive names entry values are shown in *italic* type.

Input Format

All commands have a common input format:

`command name`[:Address][:parameters]

`Address` identifies a slot, channel, or operations interface within the shelf. In commands which require an address, it must appear immediately after the command name.

`Parameters` identifies a variable name assigned to some provisionable attribute of the command. The value of the parameter is defined on each command page.

Parameters are separated with commas (,). The parameters may be entered in *any* order, but they must be entered in the *`name=value`* format.

Brackets ([ ]) are not part of the command line. Parameters enclosed in brackets are optional. Default values are provided for these parameters.

Any command can be entered on a single line.

DDM-2000 is case sensitive. Commands may be entered in upper- and lower-case letters. Entries other than commands may be case sensitive (for example, passwords). DDM-2000 addresses and logins are sensitive to white space (that is, blanks between characters). For example, the address parameters “**`m1-all`**” and “**`m1- all`**” may be interpreted differently by DDM-2000. As a general rule, white space should not be included in commands.

Addresses

Table 11-1 specifies the valid addresses for slots, lines, ports, channels, paths, cross-connections, and operations interfaces. Where lists of items appear in braces { }, and one (and only one) of these items may be used to form the address.

Each address is made up of several components that are combined to indicate a specific location on the DDM-2000. The following list shows the potential values for each address component. Refer to this list when reviewing Table 11-1:

slot type: Possible values are: `main, m, fn, ls, sysctl, userpanel,` and `all`.

group: Possible values are: `m, a, b, c,` and `all`.

Note carefully in Table 11-1 when this value is followed by a dash (-) and when it is not.

slot within a group (abbreviated as slot):

Possible values are: `1-2,` and `all`.

line: Possible values are: `1, 2,` and `all`.

Note carefully in Table 11-1 when `all` is not allowed.

STS-1: Possible values are: `1-12`, and `all`.

VTG: Possible values are: `1-7`, and `all`.

VT1.5: Possible values are: `1-4`, and `all`.

special: Possible values are: `cit, dcc, env, and cont.`

environmental alarm or control point (abbreviated as alm/cont point):

Possible values are: `1-15,` and `all`.

Table 11-1. DDM-2000 FiberReach Address Table

Object	Entity	Address	Example
Slots	Entire system	all	all
	Main slot	main-{1,2,all}	main-all
	Function unit slot (R3.1 and later)	fn-{1,2,all}	fn-all
	Function unit pair (R3.1 and later)	fn	fn
	Low speed slot	ls-all ls-{a,b,c,d}-{1-2,all}	ls-all ls-b-2
	Sys. control slot	sysctl	sysctl
	Aux. control slot	auxctl	auxctl
	Low speed protection assembly	lsprot	lsprot
Lines	OC-1 line (using 26-type OLIUs in Main)	all main-{1,2,all}	all main-1
	OC-3 Line (using 28-type OLIUs in Main)	all main-{1,2,all}	all main-1
	OC-12 Line (using 29-type OLIUs in Main, Rel. 4.0 and later)	all main-{1,2,all}	all main-1
	OC-3 Line (using 22-type OLIUs in FN slots)	all fn-{1,2,all}	all fn-1
Ports	DS1 port	all {a,b,c,d}-all {a,b,c,d}-{1}-{1-4,all} {a,b,c}-{2*}-{1-4,all}	all b-all c-1-all c-2-3
	DS3 port (BBG4/BBG4B, R3.1 and later)	f,all	f
	Front Access DS3 port (BBG19, R3.1 and later)	f-{1,2,all},all	f-1
	T1 port	all {a,b,c,d}-all {a,b,c,d}-{1}-{1-2,all} {a,b,c}-{2*}-{1-2,all}	all b-all c-1-all b-2-2

* The value “2” is only used in shelves where low-speed slots are configured as unprotected.

(Table continues on the following page)

Table 11-1. DDM-2000 FiberReach Address Table

Object	Entity	Address	Example
Channels	STS-1 Channel (within OC-1)	m{1,2}-1	m2-1
	STS-1 Channel (within OC-3, using 28-type OLIUs in Main)	m{1,2}-{1-3,all}	m2-3
	STS-1 Channel (within OC-12, using 29-type OLIUs in Main)	m{1,2}-{1-12,all}	m2-10
	STS-1 Channel (for DS3, R3.1 and later)	f	f
	STS-3c Channel (within OC-3, using 28-type OLIUs in Main and 22-type OLIUs in FN, R3.1 and later)	m{1,2}-1	m2-1
	STS-3c Channel (within OC-12, using 29-type OLIUs in Main and 22-type OLIUs in FN, R4.0 and later)	m{1,2}-{1,4,7,10]	m2-4
	VT1.5 Channel (within OC-1)	m{1,2}-{1,all*}-{1-7,all*}-{1-4,all}	m2-1-all m1-1-4-3
	VT1.5 Channel (within OC-3, using 28-type OLIUs in Main, R3.1 and later)	m{1,2}-{1-3,all*}-{1-7, all*}-{1-4,all}	m1-2-all m2-1-4-3
	VT1.5 Channel (within OC-12, using 29-type OLIUs in Main, Release 4.0 and later)	m{1,2}-{1-12,all*}-{1-7,all*}-{1-4,all}	m1-3-all m2-7-4-3
STS-1 Channels for Cross - Connections	Main port (only when 28-type OLIUs are in Main)	m-{1-3,all}	m-2
	Main port (only when 29-type OLIUs are in Main)	m-{1-12,all}	m-11
	STS-3c Channels (when 28-type OLIUs are in Main)	m-1	m-1
	STS-3c Channels (when 29-type OLIUs are in Main, R4.0 and later)	m-{1,4,7,10}	m-10
	STS-3c Channels (for 22-type OLIUs in FN, R3.1 and later)	f-1	f-1
	STS-1 channel (when FN equipped with DS3 Circuit pack)	f	f

* If all is chosen as any part of an address, no subsequent address fields should be defined.

(Table continues on the following page)

Table 11-1. DDM-2000 FiberReach Address Table

Object	Entity	Address	Example
VT1.5 Channels for Cross-connections	VT1.5 Channels (within OC-1)	all m-1-all m-1-{1-7}-{1-4,all}	all m-1-all m-1-4-all m-1-3-3
	VT1.5 Channel (within OC-3, using 28-type OLIUs in Main)	all m-{1-3}-{1-7}-{1-4,all}	all m-1-3-3
	VT1.5 Channel for DS1	all {a,b,c,d}-{1}-{1-4,all} {a,b,c}-{2}-{1-4,all}	all a-1-all a-2-all
	VT1.5 Channel (within OC-12, using 29-type OLIUs in Main, Release 4.0 and later)	all m-{1-12}-all m-{1-12, all*}-{1-7,all*}-{1-4,all}	all m-1-all m-1-3-2
	VT1.5 Channel for T1	all {a,b,c,d}-{1}-{1-2,all}	all a-1-all b-1-2
Operation Interfaces	User Panel	userpanel	userpanel
	CIT	cit-1	cit-1
	Section Data Communication Channel	dcc-{m1,m2,all} dcc-all (security only)	dcc-m1 dcc-all
	Environmental Alarm Input	env-{1-15,all}	env-1
	Environmental Control Input	cont-{1-4,all}	cont-2
Other	Faceplace Connector on the 28G-U and 29G-U OLIUs	fca-main	fca-main

* If all is chosen as any part of an address, no subsequent address fields should be defined.

The 2000 Product Family includes many SONET products that are capable of interworking with each other. At times, references to other SONET products may appear in DDM-2000 reports. The following list shows standard abbreviations for the various members of the 2000 family.

Complete Product Name	Abbreviated Product Name
unknown	unknown*
DDM-2000 OC-3	DDM-OC3
DDM-2000 OC-12	DDM-OC12
DACS IV-2000	DACS-IV
FT-2000	FT-2000
SLC-2000 Access System	SLC-2000
DDM-2000 FiberReach	FbrRch
Foreign	Foreign**

* Indicates the type of product is unknown.

** Indicates that the product is not compatible with other SONET products.

Command Mode and Prompt Mode

There are two entry modes: command mode (no prompts) and prompt mode. In the command mode (the default), the command line and any user responses are terminated by the semicolon (;) or carriage return (`<cr>`).

The prompt mode is designed for users that are not familiar with DDM-2000. To enter the prompt mode, terminate any line with a carriage return (ENTER or RETURN key) or question mark (?). Prompts generally appear in the form:

```
Prompt Message [Default value]=
```

with the default value enclosed in square brackets ([..]). There are two types of default values:

Static default values, which assume the same value each time the command is invoked.

Current default values, which reflect the mode recent value entered into the system. In the case of an address containing the value “all”, the prompt will display the value [CurrentValues]. When “Current Values” is selected, the current setting of that parameter is not changed.

To reenter the command mode from the prompt mode, answer the current prompt, then continue entering input on the same line after typing a comma (,). When the input is completed, terminating the command with a semicolon (;) will return the session to the command mode. If a command is terminated with a semicolon (;),

the system will use default values for all optional parameters for which a value has not been given.

The **`help`** command provides in-context help during a dialog with DDM-2000. Help is provided automatically when an invalid input is entered and can also be requested anytime by typing a question mark (?).

Special Control Characters

The following characters have special meaning when used with DDM-2000:

— Backspace characters control H (^H), (BACKSPACE) key is used to erase character input.

— At sign (@) is used to erase an entire line of input.

— Question mark (?) is used to get help and to enter prompt mode at any time.

— Comma (,) is used to separate parameters from each other.

— Equal sign (=) is used to separate parameter names from parameter values.

— Control T (^T) is the **`toggle`** command. See the **`toggle`** command page for additional details.

— Carriage return ((ENTER) or (RETURN) key) or exclamation point (!) are used to end a line of input.

— Semicolon (;) is used to end a command. The system will use default values for all optional parameters for which a value has not been given.

— CANcel, DELete, and CTRL-x are used to abort a command which has been entered but has not yet started to execute. All commands can be aborted anytime before the “In Progress...” message is printed. Test commands (except **`test-sysctl`**) can be aborted at any time during execution using these keys. Reports may be aborted at any time using these keys.

— Colon (:) is used to separate the command name, address, and parameters.

Paged Reports

Reports are paged. When the end of the page has been reached, the prompt “`more? [yes]=`” is displayed if more report text remains. Page length can be set with the **`set-link`** command

Confirmation Requests

NOTE: Some commands can be service-affecting if their default parameters are ignored.

After all parameters have been entered, a caution message followed by the command name, the selected values of parameters, and the prompt "`Execute? (y/n or CANcel/DELete to quit)=` is printed. To execute the command, enter "y" and carriage return. To change the value of any of the parameters, enter "n" and carriage return and you will be reprompted for all parameters. To abort the command, enter CANcel or DELete.

Output Descriptions

The output for most commands is described on the following manual pages. Refer to the "Detailed Alarm and History Reports" part of this section for more complete examples and explanations of the alarm and status report (**`rtrv-alm`**) and the history report (**`rtrv-hsty`**).

Alarm Level Prompt

When the system is ready to accept a new command, it prints the system prompt "<". If there is an active alarm or status condition, the level of the highest level active alarm in the system is printed before the "<". For example, the system prompt is "MN<" when a minor alarm condition exists in the system.

Security

The option of system security is provided for DDM-2000 systems. Three privileged user logins and a maximum of 100 nonprivileged user logins, consisting of general users, maintenance users, and Reports-Only users, are available. Privileged users may set system security on all data communication channels (DCC) and each craft interface terminal (CIT) interface (using the **`set-secu`** command) and assign login and password pairs to general users (using the **`set-lgn`** command). General users may execute commands that are not restricted to privileged users and obtain reports. Maintenance users may only execute commands that access the system, extract reports, and execute maintenance functions. Reports-Only users may only obtain reports and ececute several basic commands.

When system security is enabled, all users are then required to enter a valid login and password pair to access the system.

The following comands are always restricted to privileged users only:

— **init-sys** (initialize system)

— **rstr-passwd** (restore password)

— **rtrv-lgn** (retrieve login)

— **rtrv-passwd** (retrieve password)

— **set-fecom** (set far-end communication)

— **set-lgn** (set login)

— **set-secu** (set security)

— **set-feat** (set feature)

— **set-sync** (set synchronization)

When security is enabled on a system, the following commands become restricted to priviliged users only:

— **cpy-prog** (copy program)

— **ent-ulsdcc-l3** (enter upper layer section DCC, Layer 3)

— **ent-ulsdcc-l4** (enter upper layer section DCC, Layer 4)

— **ent-tl1msgmap** (enter TL1 message map for Operations Systems)

— **init-pm** (initialize performance montoring)

— **ins-prog** (install program)

— **reset** (reset system software)

— **set-date** (set date)

— **set-ne** (set network element)

When security is enabled on a system, only the following commands may be executed by Reports-Only users:

— **?** (help)

— **logout** (log out)

— **rlgn** (remote login)

— **set-link** (set link)

— **set-passwd** (set password)

— **T** (toggle)

— all **rtrv** commands except **rtrv-lgn** and **rtrv-passwd**

Refer to the **set-secu** command for more details on system security.

DDM-2000 FiberReach Command Menu

Table 11-2 lists the DDM-2000 FiberReach commands by category and indicates what type of user is able to execute each command.

Table 11-2. DDM-2000 FiberReach Command Menu

Command Category	Verb	Modifier	Security Level
CONFIGURATION	rtv-	alm	Privileged, General, Maintenance, Reports only
		state-eqpt	Privileged, General, Maintenance, Reports only
		state-path	Privileged, General, Maintenance, Reports only
		state-sts1	Privileged, General, Maintenance, Reports only
		state-vt1	Privileged, General, Maintenance, Reports only
		eqpt	Privileged, General, Maintenance, Reports only
		feat	Privileged, General, Maintenance, Reports only
		fecom	Privileged, General, Maintenance, Reports only
		hsty	Privileged, General, Maintenance, Reports only
		sync	Privileged, General, Maintenance, Reports only
		link	Privileged, General, Maintenance, Reports only
		oc1	Privileged, General, Maintenance, Reports only
		oc3	Privileged, General, Maintenance, Reports only
		attr-alm	Privileged, General, Maintenance, Reports only
		attr-cont	Privileged, General, Maintenance, Reports only
		attr-env	Privileged, General, Maintenance, Reports only
		ne	Privileged, General, Maintenance, Reports only
		map-neighbor	Privileged, General, Maintenance, Reports only

Table 11-2. DDM-2000 FiberReach Command Menu (Contd)

Command Category	Verb	Modifier	Security Level
CONFIGURATION (Continued)	rtrv-	map-network	Privileged, General, Maintenance, Reports only
		crs-sts1	Privileged, General, Maintenance, Reports only
		crs-sts3c	Privileged, General, Maintenance, Reports only
		crs-vt1	Privileged, General, Maintenance, Reports only
		ulsdcc-l3	Privileged, General, Maintenance, Reports only
		ulsdcc-l4	Privileged, General, Maintenance, Reports only
		sts1	Privileged, General, Maintenance, Reports only
		tl1msgmap	Privileged, General, Maintenance, Reports only
		trace-sts1	Privileged, General, Maintenance, Reports only
		t1	Privileged, General, Maintenance, Reports only
		t3	Privileged, General, Maintenance, Reports only
		vt1	Privileged, General, Maintenance, Reports only
		x25	Privileged, General, Maintenance, Reports only
	set-	oc1	Privileged, General
		oc3	Privileged, General
		t1	Privileged, General
		date	Privileged only if Security enabled. Privileged, General if Security disabled.
		link	Privileged, General, Maintenance, Reports only
		attr-alm	Privileged, General
		attr-cont	Privileged, General
		attr-env	Privileged, General
		ne	Privileged only if Security enabled. Privileged, General if Security disabled.
		state-t1	Privileged, General

Table 11-2. DDM-2000 FiberReach Command Menu (Contd)

Command Category	Verb	Modifier	Security Level
CONFIGURATION (Continued)	set-	state-sts1	Privileged, General
		state-vt1	Privileged, General
		fecom	Privileged
		feat	Privileged
		sts1	Privileged, General
		vt1	Privileged, General
	upd		Privileged, General
	init-	sys	Privileged
	switch-	ls	Privileged, General, Mainenance
		path-vt1	Privileged, General, Mainenance
	opr-	lpbk-t1	Privileged, General, Mainenance
		lpbk-t3	Privileged, General, Mainenance
	rls-	lpbk-t1	Privileged, General, Mainenance
		lpbk-t3	Privileged, General, Mainenance
	test-	trmsn-t1	Privileged, General, Mainenance
		led	Privileged, General, Mainenance
		alm	Privileged, General, Mainenance
		sysctl	Privileged, General, Mainenance
	ins-	prog	Privileged only if Security enabled. Privileged, General if Security disabled.
	ent-	crs-vt1	Privileged, General
		crs-sts1	Privileged, General
		crs-sts3c	Privileged, General
		usldcc-l3	Privileged only if Security enabled. Privileged, General if Security disabled.
		usldcc-l4	Privileged only if Security enabled. Privileged, General if Security disabled.
		tl1msgmap	Privileged only if Security enabled. Privileged, General if Security disabled.
		osacmap	Privileged only if Security enabled. Privileged, General if Security disabled.
	dlt-	crs-vt1	Privileged, General
		crs-sts1	Privileged, General
		crs-sts3c	Privileged, General

Table 11-2. DDM-2000 FiberReach Command Menu (Contd)

Command Category	Verb	Modifier	Security Level
	cnvt-	crs	Privileged, General
	cpy-	prog	Privileged only if Security enabled. Privileged, General if Security disabled.
FAULT	rtrv-	alm	Privileged, General, Mainenance, Reports-Only
		state-eqpt	Privileged, General, Mainenance, Reports-Only
		state-path	Privileged, General, Mainenance, Reports-Only
		eqpt	Privileged, General, Mainenance, Reports-Only
		hsty	Privileged, General, Mainenance, Reports-Only
	opr-	aco	Privileged, General, Mainenance, Reports-Only
	reset		Privileged, General, Mainenance, Reports-Only
PERFORMANCE	rtrv-	pm-tca	Privileged, General, Mainenance, Reports-Only
		pm-sect	Privileged, General, Mainenance, Reports-Only
		pm-line	Privileged, General, Mainenance, Reports-Only
		pm-t1	Privileged, General, Mainenance, Reports-Only
		pm-t3	Privileged, General, Mainenance, Reports-Only
		pm-sts1	Privileged, General, Mainenance, Reports-Only
		pm-vt1	Privileged, General, Mainenance, Reports-Only.
		pmthres-sect	Privileged, General, Mainenance, Reports-Only.
		pmthres-line	Privileged, General, Mainenance, Reports-Only.
		pmthres-sts1	Privileged, General, Mainenance, Reports-Only.

Table 11-2. DDM-2000 FiberReach Command Menu (Contd)

Command Category	Verb	Modifier	Security Level
PERFORMANCE (Continued)	rtrv-	pmthres-vt1	Privileged, General, Mainenance, Reports-Only.
		pmthres-t1	Privileged, General, Mainenance, Reports-Only.
		pmthres-t3	Privileged, General, Mainenance, Reports-Only.
		alm	Privileged, General, Mainenance, Reports-Only.
		state-eqpt	Privileged, General, Mainenance, Reports-Only.
		state-path	Privileged, General, Mainenance, Reports-Only.
		eqpt	Privileged, General, Mainenance, Reports-Only.
		hsty	Privileged, General, Mainenance, Reports-Only.
	set-	pmthres-sect	Privileged, General, Mainenance, Reports-Only.
		pmthres-line	Privileged, General, Mainenance, Reports-Only.
		pmthres-sts1	Privileged, General, Mainenance, Reports-Only.
		pmthres-vt1	Privileged, General, Mainenance, Reports-Only.
		pmthres-t1	Privileged, General, Mainenance, Reports-Only.
		pmthres-t3	Privileged, General, Mainenance, Reports-Only.
	init-	pm	Privileged only if Security enabled. Privileged, General if Security disabled.
SECURITY	rtrv-	lgn	Privileged
		secu	Privileged, General, Mainenance, Reports-Only.
		passwd	Privileged
	set-	lgn	Privileged
		secu	Privileged
		passwd	Privileged, General, Mainenance, Reports-Only.
	rstr-	passwd	Privileged

Table 11-2. DDM-2000 FiberReach Command Menu (Contd)

Command Category	Verb	Modifier	Security Level
MISCELLANEOUS	apply		Privileged
	help		Privileged, General, Mainenance, Reports-Only.
	logout		Privileged, General, Mainenance, Reports-Only.
	rlgn		Privileged, General, Mainenance, Reports-Only.
	toggle		Privileged, General, Mainenance, Reports-Only.

Starting a CIT Session

Procedures in the “Operation and Maintenance” section of this manual describe how to “Connect a CIT and Establish a Session” with the DDM-2000.

CPro-2000

CPro-2000 is a software package from Lucent Technologies to help users of DDM-2000 Multiplexer systems set up and use an advanced, yet simple, craft operations environment on a personal computer using *Microsoft* Windows**3.1 in the enhanced mode. CPro-2000 provides the user with the normal CIT access to DDM-2000 as well as a mouse-driven graphical user interface (GUI). The user may issue commands to DDM-2000 by using the mouse to select items from a menu and/or objects from the graphics display.

CPro-2000 Release 3.0 and later supports DDM-2000 OC-3,OC-12 and FiberReach Multiplexers, as well as FT-2000 OC-48 Systems. For complete information on CPro-2000, refer to the *CPro-2000 User Manual*, 190-253-101 (for CPro-2000 Release 3.0) or 365-576-1xx (for CPro-2000 Release 4.0 and later).

Commands

The following pages provide detailed information about the user interface commands supported by DDM-2000. Detailed report information is located at the end of this chapter.

* Registered trademark of Microsoft Corporation.

NAME

apply: Locally Overwrite the Executing Software Generic with a New Software Generic

INPUT FORMAT

`apply`[:[`date=`*`date`*][,[`time=`*`time`*][,`action=`*`action`*]]];

DESCRIPTION

CAUTION:
Normal alarming and protection switching are disabled for the DDM-2000 system while this command is used to copy the Network Element's dormant program.

This command can be used on the FiberReach product starting with Release 4.0.

This command can be issued by the user to initiate the installation of a dormant copy of a software generic stored in the network element's flash memory, thereby replacing the currently executing software generic.

Once the **`apply`** command completes, the software in flash memory is left undisturbed, so that it can be copied to other like network elements.

CAUTION:
Do not attempt any command that causes shelf reset while an apply command is in progress.

NOTE:
This command is available to privileged users only for all CIT or DCC ports on the system.

Users can schedule a date and time for this command to be executed. If no date and time is supplied, the command will execute 15 minutes after it is received. Authorized users can remotely apply the dormant software generic to be the executing one by first remotely logging into the target network element and then initiating this command.

The input parameters are:

date Date is entered as six digits YYMMDD, where YY represents the last two digits of the year, MM is the month, and DD is the day. Default is the current system day. If no *date* parameter is entered, and **action** has the value of **install** or is **NULL**, and the entered value for *time* has already passed the 24-hour interval in the current system's date, *date* will default to the next system's day (current system's day + 1). As an example, if the current time is 23:46 but the provisioned time is set for 21:00, the execution of the command will occur at 21:00 the next system's day.

time The time parameter is supplied in order to identify the time at which the software is to be installed on the network element. If no *time* parameter is entered, and the *action* parameter has the value of **install** or is **NULL**, then the software will be scheduled for installation 15 minutes after receiving the **apply** command. The fifteen-minute interval is designed to give the user a chance to cancel the command and/or to issue similar command(s) to other network element(s) in the subnetwork.

This parameter is entered as six digits **HHMM[SS]**. **HH** expresses the hour on a 24-hour clock basis and the allowed values range from **00** to **23**, with leading zeros required. **MM** expresses the minutes and the allowed values range from **00** to **59** with leading zeros required. **SS** expresses the seconds and the allowed values are **NULL** or a value ranging from **00** to **59** with leading zeros required.

action The action parameter enables the execution of this command to be either confirmed, or canceled. The allowed values are:

install This action causes the installation of software at the time and date supplied in the *time* and *date* parameters. The installation will take place in 15 minutes if *time* and *date* are not provisioned.

cancel Cancel the scheduled installation.

NULL No value. When no value is entered, the default value is **install**.

If a software installation was already scheduled, and a **cancel** value was received, the software installation is canceled.

CAUTION:
*If this command is scheduled for execution (action=***install***),* the **set-date** command should never be issued before program installation is invoked and completed. In this case, the user is advised to wait until program installation is completed, and the system is reset.

NOTE:
If this command is issued with (*action*=**install**), while there is an outstanding apply command, the newly issued command will replace the old request with the newly entered values of **date** and **time**.

If this command is entered by a non-privileged user, the following denial message is displayed:

```
PICC
/* Privileged, Illegal Command Code. */
```

If the command syntax is correct, the following message will be displayed:

```
/* Testing for NE program copy ... */
```

If an **apply** command is issued to schedule (install or NULL) a software installation but **time** is entered with invalid syntax, the user will be reprompted to enter a valid **time** value.

If an **apply** command is issued to schedule (install or NULL) a software installation but **date** is entered with invalid syntax, the user will be reprompted to enter a valid **date** value.

If the time specified is unknown to the local system, the following denial message will be displayed:

```
IDNV
/* Input Data Not Valid */
/* Unknown time specified. */
```

If the date specified is unknown to the local system, the following denial message will be displayed:

```
IDNV
/* Input Data Not Valid */
/* Unknown date specified. */
```

If this command is issued and the dormant copy of software generic is either missing (does not reside in the flash memory) or is determined to have been corrupted, the following denial message is displayed:

```
SROF
/* Status, Requested Operation Failed */
/* Dormant file corrupted or missing. */
```

If an otherwise valid command with action equal to **`cancel`** is initiated, but with no outstanding apply command, the request will be denied and the following message displayed:

```
SROF
/* Status, Requested Operation Failed */
/* No apply command to cancel. */
```

After testing for NE program apply, the following confirmation message will be displayed:

```
/* Caution! Execution of this command will erase the current
   generic n.n.n at Target Identifier and replace it with
   generic m.m.m.  If this fails prior to completion,
   the control system will likely become inoperable
   until another install program attempt is successful.
   This command will terminate any active CIT and TL1 sessions.
   This command will take time to install the new program.  Check
   the Software Release Description for the time estimates. */


   You have selected the apply command with these parameters:

   ProgramType = nesw
   date = date
   time = time
   action = action

Execute? (y/n or CANcel/DELete to quit) =
```

When this command is used to install a new NE release of program that is significantly different from the program currently running on the system, the following confirmation message will be displayed after testing for program apply:

```
/* Caution! Execution of this command will erase the current
   generic n.n.n at Target Identifier and replace it with
   generic m.m.m.  If this fails prior to completion,
   the control system will likely become inoperable
   until another install program attempt is successful.
   This command will terminate any active CIT and TL1 sessions.
   Check the Software Release Description for the time estimates. */

/* Caution! Major changes exist between these two generics such
   that they may not be compatible.  Check the TOPS and program
   compatibility information for additional information or actions
   needed. */


   You have selected the apply command with these parameters:

   date = date
   time = time
   action = action


Execute? (y/n or CANcel/DELete to quit) =
```

See "Install New Generic Program" in the TOP section of this manual for complete instructions before using this command. Use the **`rtrv-map-network`** command to obtain the exact TID for the target system. The current program version may also be obtained from the initial screen when logged into the system with a craft interface terminal (CIT).

When the user gives a positive response to the confirmation message, the following message is displayed:

```
In progress; Program installation will start on <date>, at
<time>.
System will Reset when program installation is complete.
```

After displaying the above message, the NE program apply will begin at the provisioned **`date`** and **`time`**.

All software apply commands that fail or succeed will be reported in the History log (rtrv-hsty report).

If an apply for NE generic is issued with action equal to **`install`**, and then an action equal to **`cancel`** is issued, the following confirmation message will be displayed:

```
/* Caution! Execution of this command will cancel the scheduled
   software installation at Target Identifier.


   You have selected the apply command with these parameters:

   ProgramType = nesw
   action = cancel


Execute? (y/n or CANcel/DELete to quit) =
```

NOTE:
When the value **`cancel`** is entered for Action, the user will not be prompted for the (date and time) parameters. As soon as the scheduled program installation is canceled as a result of this option, the Date and Time are initialized to zero (0) values.

When the user gives a positive response to the confirmation message, the following message is displayed:

```
Program installation is being canceled.
```

Once the program installation is canceled, the following message is displayed:

```
COMPLD
```

RELATED COMMANDS

cpy-prog

ins-prog

rtrv-ne

NAME

cpy-prog: Copy Program

INPUT FORMAT

cpy-prog:*TID;*

DESCRIPTION

This command is used to copy a software program from one DDM-2000 network element to another. The software to be copied may be a non-executing, dormant copy of a software generic. When executing this command (to copy the Network Element's software generic), the local network element will internally check whether the currently executing software generic or a dormant software generic should be copied into the memory of the target network element; if the dormant software generic is copied into the memory of the target network element, then it would reside as a dormant copy in the target network element also. If the executing software generic is copied into the target network element, then it would override the target network element's executing generic. The **apply** command is used later to overwrite the currently executing generic with a copy of the generic included in the dormant software.

NOTE:
If security is enabled on any CIT or DCC port on a system, then this command is available to privileged users only for all CIT or DCC ports on the system. If security is not enabled on *some* systems in the network, users on unsecured systems will be able to copy either executing or dormant program onto systems with security enabled.

The input parameter is:

TID The Target Identifier (system name) of the system into which the program will be loaded. TIDs are case insensitive.

If the command syntax is correct, the following message will be displayed:

```
/* Testing for program copy ... */
```

If the system name specified is the name of the local system instead of the remote system, the following error message will be displayed and the user will be asked to reenter the TID:

```
/* Invalid Target Identifier (TID) */
/* Enter the name (TID) of the far end system. */
TID=
```

If the system name specified is unknown to the local system, the following error message will be displayed: and the user will be asked to reenter the TID.

```
/* Unknown Target Identifier (TID) */
/* Enter the name (TID) of the far end system. */
TID=
```

If the system name specified currently has a duplicate TID alarm condition, the following denial message will be displayed:

```
IITA
/* Input, Invalid TArget identifier (TID) */
/* Duplicate Target Identifier. */
```

If a user attempts to copy program from one product type to a different product type (for example, DDM-2000 OC-12 program into an FT-2000 system), the following denial message will be displayed:

```
IITA
/* Input, Invalid TArget identifier (TID) */
/* <TID> is a different product type;
   Incompatible software. */
```

The above message is displayed before any association is established between the local and target network elements (NEs).

If a user attempts to copy an NE program to a target network element that has either an **apply** command in progress or **apply** is already scheduled, the following denial message is displayed:

```
SSTP
/* Status, execution SToPped */
/* Apply command is either IP or scheduled
   in Target NE. */
```

If a user attempts to copy an NE program to a target network element that has a cpy-prog command in progress, the following denial message is displayed:

```
SSTP
/* Status, execution SToPped */
/* A cpy-prog command is already IP
   in Target NE. */
```

If the remote system has a communication failure or a "P" is displayed in the SYSCTL 7-segment LED display, the following denial message will be displayed:

```
SSTP
/* Status, execution SToPped */
/* Communication failure. */
```

For all FiberReach releases, after testing for program copy, the following confirmation message will be displayed:

```
/* Caution! Execution of this command will erase the current
   generic n.n.n at Target Identifier and replace it with
   generic m.m.m.  If this fails prior to completion,
   the control system will likely become inoperable
   until another install program attempt is successful.
   This command will terminate any other active CIT sessions.
   This command will take time to install the new program.  Check
   the Software Release Description for the time estimates. */

Execute? (y/n or CANcel/DELete to quit) =
```

If a Network Element (NE) receives this command, but is unable to determine a TID-NSAP translation for the entered TID (TID could not be found), this command will be denied and the following message displayed:

```
SNVS
/* Status, Not in Valid State */
/* Remote session cannot be established.
   TID entered is not found. */
```

If the remote NE's TID does not match the entered TID (only the NSAP matched in this case), this command will be denied and the following message displayed :

```
SNVS
/* Status, Not in Valid State */
/* Remote session cannot be established.
   Inconsistent TID.
   NSAP=XXXXXXXXXXXXXXXXXXXXXXXXXXXXXXXXXXXXXXXX */
```

If an NE receives this command and is able to determine a TID-NSAP translation, but the NSAP is unreachable (TID is kept the same, but NSAP must have been changed), this command will be denied and the following message displayed:

```
SNVS
/* Status, Not in Valid State */
/* Remote session cannot be established.
   Association setup failure.
   NSAP=XXXXXXXXXXXXXXXXXXXXXXXXXXXXXXXXXXXXXXXX */
```

In the above message, NSAP represents the one found in the TID-NSAP translation.

When this command is used to copy a new NE release of program (into the dormant memory of remote system) that is significantly different from the program currently running on the system, the following confirmation message will be displayed after testing for program copy:

```
/* Caution! Execution of this command will overwrite the current
   dormant generic (if any) at Target Identifier. */

/* Caution! Major changes exist between these two generics such
   that they may not be compatible.  Check the TOPS and program
   compatibility information for additional information or actions
   needed. */

Execute? (y/n or CANcel/DELete to quit) =
```

See "Install New Generic Program" in the TOP section of this manual for complete instructions before using this command. Use the **`rtrv-map-network`** command to obtain the exact TID for the target system. The current program version may also be obtained from the initial screen when logged into the system with a craft interface terminal (CIT).

When the user gives a positive response to the confirmation message, the program copy begins and the following message is displayed:

```
In progress ...............................................
```

The number of dots and how fast they are displayed depend on the size of the program to be copied, number of DCC spans between the local and remote systems, and DCC traffic.

If the program copy fails, the following failure message will be displayed:

```
SSTP
/* Status, execution SToPped */
/* Program copy failed to Target Identifier
   Before attempting another copy, check the User's Manual
   to review a list of possible problems and their solutions. */
```

When the program has successfully been copied to the remote system, the following message is displayed:

```
/* NE Generic program m.m.m is installed. */
```

If this command experiences memory space problems at the target network element (that is, the software will not fit in the space allocated in flash memory reserved for it), the currently executing software generic will be overwritten.

RELATED COMMANDS

rtrv-map-network

rtrv-ne

ins-prog

NAME

dlt-crs-sts1: Delete Cross-Connection STS-1

INPUT FORMAT

dlt-crs-sts1:*Address1*,*Address2*[:*cct*=CrsType];

DESCRIPTION

CAUTION:
Execution of this command may affect service.

This command deletes STS-1 cross-connections. This command is available beginning with FiberReach Release 3.1 and later, when the FiberReach shelf is equipped with 28-type OC-3 OLIUs in both Main unit slots.

The input parameters are:

Address1 and *Address2*

These are the addresses of the two STS-1 channels, or one STS-1 channel and one DS3 port (in Release 3.1 and later) where the existing STS-1 cross-connection is to be deleted. In ring applications, pass-through connections are deleted by using the same address for *Address1* and *Address2*.

If the shelf is equipped with 28-type OLIUs in Main unit slots (in FiberReach 3.1 and later releases), valid addresses are: **m-{1-3}**

If the shelf is equipped with 29-type OLIUs in Main unit slots (in FiberReach Release 4.0 and later), the valid addresses are: **m-{1-12}**

For the equipage of DS3 circuit packs in the Function unit slots (FiberReach Release 3.1 and later), the valid Function unit address is: **f**

cct CrsType specifies the cross-connection type. The valid values are:

twoway Two-way (default) cross-connections apply to terminating, hubbing, add/drop, and pass-through configurations. This is the default value.

NOTE:
The *cct* parameter is an optional parameter if the cross-connection type to be deleted is **twoway**. The *cct* parameter is required for other CrsType values.

Address1, *Address2*, and *CrsType* must match an existing STS-1 cross-connection or execution of the command will complete with the following message:

```
SNVS
/*  Status, Not in Valid State  */
/*  The specified STS-1 cross-connection does not exist. */
```

If an attempt is made to execute this command, when a mix of incompatible OLIU packs exists in Main, the request will be denied with the following message:

```
SNVS
/* Status, Not in Valid State */
/* Both main slots must be equipped with compatible OLIU packs. */
```

After entering this command, the following confirmation message is displayed:

```
/* Caution!  Execution of this command may affect service.
   You have selected the dlt-crs-sts1 command with these parameters:

   Address1 = address
   Address2 = address
   CrsType = value */

Execute? (y/n or CANcel/DELete to quit) =
```

RELATED COMMANDS

ent-crs-sts1

rtrv-crs-sts1

NAME

dlt-crs-sts3c: Delete Cross-Connection STS-3c

INPUT FORMAT

`dlt-crs-sts3c`:*`Address1`*,*`Address2`*[:*`cct`*=`CrsType`];

DESCRIPTION

CAUTION:
Execution of this command may affect service.

This command deletes STS-3c cross-connections. STS-3c signals are identified by the first STS-1 address in the STS-3c signal. The following chart shows the mapping for STS-3c addresses to the internal STS-1 signal structure:

STS-3c Mapping

Interface	Address	Internal STS-1 #s
Main	m-1	1,2,3
	m-4	4,5,6
	m-7	7,8,9
	m-10	10,11,12
FN	f-1	1,2,3

Starting with FiberReach Release 3.1, this command can be used ONLY if the shelf is equipped with 28-type OLIU circuit packs in its Main unit slots, and 22-type OLIU circuit packs in its Function unit slots. The ONLY valid cross-connect type is **`twoway (add-drop)`**.

Starting with FiberReach Release 4.0, this command can be used also if the shelf is equipped with 29-type OLIU circuit packs in its Main unit slots, and 22-type OLIU circuit packs in its Function Unit slots. The valid cross-connect type is **`Twoway`** (indicating pass-through and add-drop for 0X1).

The input parameters are:

Address1 and *Address2*

These are the addresses of the two STS-3c channels that are to be deleted. Valid connections are listed below. Where items appear in braces { }, any one (and only one) of these items may be used to form the address.

m-1 to f-1 Allowed if the FiberReach shelf is equipped with 28-type OLIU circuit packs in its Main unit slots, and 22-type OLIU circuit packs in its Function unit slots.

m-{1,4,7,10} to m-{1,4,7,10}
Allowed if the FiberReach shelf is equipped with 29-type OLIU circuit packs in its Main unit slots.

m-{1,4,7,10} to f-1
Allowed if the FiberReach shelf is equipped with 29-type OLIU circuit packs in its Main unit slots, and 22-type OLIU circuit packs in its Function unit slots.

cct CrsType specifies whether the cross-connection is two-way The valid values are:

twoway Two-way applies to add-drop and pass through cross-connections. Twoway is the default value.

The *cct* parameter is an optional parameter if the cross-connection type to be deleted is **twoway**.

Address1, *Address2*, and *CrsType* must match an existing STS-3c cross-connection, or execution of the command will be denied with the following message:

```
SNVS
/*  Status, Not in Valid State  */
/*  The specified STS-3c cross-connection does not exist. */
```

If an attempt is made to execute this command, when a mix of incompatible OLIU packs exists in main, the request will be denied with the following message:

```
SNVS
/* Status, Not in Valid State */
/* Both main slots must be equipped with compatible OLIU packs. */
```

After entering this command, the following confirmation message is displayed:

```
/* Caution!  Execution of this command may affect service.
   You have selected the dlt-crs-sts3c command with these parameters:

   Address1 = address
   Address2 = address
   CrsType = value */

Execute? (y/n or CANcel/DELete to quit) =
```

RELATED COMMANDS

ent-crs-sts3c

rtrv-crs-sts3c

NAME

dlt-crs-vt1: Delete Cross-Connection VT1.5

INPUT FORMAT

dlt-crs-vt1:*Address1*,*Address2*[:**cct=**CrsType];

DESCRIPTION

CAUTION:
Execution of this command may affect service.

This command deletes VT1.5 signal cross-connections within a DDM-2000 FiberReach system.

The input parameters are:

Address1 and *Address2*

These are the addresses of the two VT1.5 channels, or one VT1.5 channel and one DS1 or T1 port, where existing cross-connections are to be deleted. In ring applications, pass-through connections are deleted by using the same address for *Address1* and *Address2*.

If the shelf is equipped with 26-type OLIUs in Main unit slots, valid addresses are:
m-1-{1-7}-{1-4,all}, m-1-all

If the shelf is equipped with 28-type OLIUs in Main unit slots (in FiberReach 3.1 and later) valid VT1.5 addresses are:
m-{1-3,all}-{1-7}-{1-4,all}

If the shelf is equipped with 29-type OLIUs in Main unit slots (FiberReach Release 4.0 and later), valid OC-12 Main unit Addresses are:
m-{1-12}-{1-7,all}-{1-4,all}

Valid port addresses in 1X1 protected low-speed configurations:
{a,b,c,d}-1-{1,4,all}

Valid port addresses in 1x7 protected low-speed configurations:
{a,b,c}-{1,2}-{1,4,all},
d-1-{1-4,all}

The T1EXT (BBF6) circuit pack supports two T1 ports. When addressing ports on a BBF6, only port numbers 1 and 2 are valid. Specifying `all` selects ports 1 and 2 only.

cct CrsType specifies cross-connection type. The valid values are:

twoway Two-way cross-connections apply to add/drop and pass-through cross-connections only. Two-way is the default value.

locked Locked cross-connections support nonpath-switched DS1 or T1 drop applications.

If the address includes the value `all`, the value for *cct* applies to every cross-connection within the range of the addresses.

The *Address1*, *Address2*, and *CrsType* parameters must match an existing VT1.5 cross-connection or execution of the command will complete with the following message:

```
/* The specified VT1.5 cross-connection does not exist
   and can not be deleted. */
```

If the cross-connection request address includes the value **all** and the addresses do not have a one-to-one relationship, this command will be denied with the following denial message:

```
SNVS
/* Status, Not in Valid State */
/* Invalid cross-connection request. */
```

If this command is entered with several addresses or an address of **`all`** is used and one or more of these addresses cannot be processed, the command will complete but the following message will be displayed:

```
/* The following cross-connections not processed.
   Cross-connect exists with different address:
   Address1  Address2
   Address1  Address2
      .         .
      .         .
      .         .    */
```

When *`CrsType`* is used and the command is entered with one or more addresses that cannot be processed or an address of **`all`** that cannot be processed, the command will complete but the following message will be displayed:

```
/* The following cross-connections were not processed
   because the address or cross-connection type did not match.
   Address1  Address2  CrsType
   Address1  Address2  CrsType
      .         .         .
      .         .         .      */
```

If an attempt is made to execute this command, when a mix of incompatible OLIU packs exists in Main, the request will be denied with the following message:

```
SNVS
/* Status, Not in Valid State */
/* Both main slots must be equipped with compatible OLIU packs. */
```

After entering this command, the following confirmation message is displayed:

```
/* Caution! Execution of this command may affect service.
   You have selected the dlt-crs-vt1 command with these parameters:

   Address1 = address
   Address2 = address
   CrsType = value */

Execute? (y/n or CANcel/DELete to quit) =
```

If this command is entered with `all` as part of the address, the following confirmation message is displayed:

```
/* Caution! Execution of this command may affect service.
   Multiple cross-connections may be affected.
   You have selected the dlt-crs-vt1 command with these parameters:

   Address1 = address
   Address2 = address
   CrsType = value */

Execute? (y/n or CANcel/DELete to quit) =
```

RELATED COMMANDS

ent-crs-vt1

rtrv-crs-vt1

NAME

dlt-ulsdcc-l4: Delete Upper Layer Section DCC

INPUT FORMAT

`dlt-ulsdcc-l4`:[**`L4ajsys=`***`AJSystemId`*][**`L4tdctid=`***`TDCTID`*];

DESCRIPTION

NOTE:
This command page describes the functionality of the **`dlt-ulsdcc-l4`** command in FiberReach Release 3.0 and all later TARP releases.

This command is used to delete provisionable parameters of Layers 3 through 7 of the open systems interconnection (OSI) 7-layer protocol stack. This stack refers to the OSI reference model which is a logical structure for network operations. This model defines a standard communication protocol between network elements as specified by the International Standards Organization (ISO).

This command is used to delete a row of data in buffers which hold user-settable parameters in Layer 4 of the OSI stack. These buffers are the TARP Manually Adjacent NE buffer and the TARP Data Cache (TDC).

NOTE:
If security is enabled, then this command is available to privileged users only for all CIT or DCC ports on the shelf.

The input parameters are:

`L4ajsys` This parameter specifies the NSAP System Identifier field of the TARP adjacent NE to be deleted from the TARP Manual Adjacency list of local NE. This is a 6 byte (12 hex digit) field of the TARP adjacent NE. Since the System ID is unique for each NE, the System ID is sufficient to identify a specific Manual Adjacency.

The format of this parameter is **`L4ajsys=`***`AJSystemId`*, where *`AJSystemId`* is the 6 byte (12-digit hex) System ID field of the NSAP address of the Adjacent NE in the list.

This parameter deletes a single Manual Adjacent NE. Multiple Manual Adjacent NEs are deleted using multiple occurrences of the **`dlt-ulsdcc-l4`** command.

The parameter **L4tdctid** is used to specify an entry in the TARP Data Cache (TDC) to delete.

Specifying this parameter causes the deletion of a single row of data in the TDC. Multiple rows of data are deleted using multiple occurrences of this command.

The TDC stores three parameters for each entry; the NSAP, TID and the address type. The address type is not user provisionable and is set to its default value ('FE' hex) in the TDC. Specifying the TID field of the NSAP is sufficient to identify the complete TDC entry.

L4tdctid This parameter specifies the TID of the Network Element for which the row of data is to be deleted from the TDC.

While entering **L4ajsys**, if an incorrect number of digits is entered for a specific parameter, the following message is issued and the user is reprompted:

```
/* Invalid data entry
   Enter a <num> digit hexadecimal number. */
```

The <num> specifies the number of digits required.

If an invalid *L4TDCTID* value is entered (wrong syntax), the following message is displayed and the user is reprompted:

```
/* Invalid data entry
   Invalid L4TDCTID value entered. */
```

After entering this command, the following confirmation message is displayed:

```
/* Caution!  Network Element access is affected by this command.

   You have selected the dlt-ulsdcc-l4 command with these parameters:

   L4ajsys   = AJSystemId
   L4tdctid  = TDCTID */

Execute?  (y/n or CANcel/DELete to quit) =
```

If no entries in the TDC match the Target Identifier (TID) specified in the **`L4tdctid`**, then no action is taken and the following denial message is displayed:

```
IDNV
/* Input, Data Not Valid */
/* Invalid L4tdctid value was entered. */
```

If no entries in the Manual Adjacency table match the SYS ID specified in the **`L4ajsys`**, then no action is taken and the following denial message is displayed:

```
IDNV
/* Input, Data Not Valid */
/* Invalid L4ajsys value was entered. */
```

RELATED COMMANDS

ent-ulsdcc-l4

ent-ulsdcc-l3

rtrv-ulsdcc-l4

NAME

ent-crs-sts1: Enter Cross-Connection STS-1

INPUT FORMAT

ent-crs-sts1:*Address1*,*Address2*[:*cct*=CrsType];

DESCRIPTION

This command sets bidirectional STS-1 cross-connections between Main and function unit slots and is available with FiberReach 3.1 and later releases, when equipped with the 28-type OLIU circuit packs in Main slots.

Also starting with FiberReach Release 3.1, the function unit slots can be equipped with DS3 circuit packs, supporting two-way (add/drop) cross-connection types.

Starting with FiberReach Release 4.0, this command can be used also when equipped with 26 or 29-type OLIU circuit packs in Main slots and DS3 circuit packs in the FN slots.

The input parameters are:

Address1 and *Address2*

These are the addresses of the two STS-1 channels or one STS-1 channel and one DS3 port that are to be cross-connected. For STS-1 ring pass-through traffic, *Address1* and *Address2* must be the same time slot. Valid addresses are listed on the following pages.

NOTE:
All cross-connections are bidirectional.

cct CrsType specifies the cross-connection type. The valid values are:

twoway Twoway cross-connections apply to terminating, hubbing, add/drop, pass-through, Twoway is the default value.

If the addresses indicate a pass-through cross-connection, the CrsType is not prompted for but is automatically set to **twoway**. The confirmation message indicates that a CrsType of **twoway** has been selected for the user. If a CrsType other than **twoway** is entered on the command line when the addresses indicate a pass-through cross-connection, the request is rejected.

In DDM-2000 FiberReach releases, the cross-connect mode is always manual (**crs=***manual*). Valid manual cross-connections are listed below. Where items appear in braces { }, any one (and only one) of these items may be used to form the address.

Ring Release Cross-Connect Addresses:

`m-{1-3} to m-{1-3}`
Allowed when Main slots are equipped with 28G-U OLIUs.

`m-{1-3} to f`
Starting with Release 3.1, allowed when the addressed function group is equipped with DS3 (BBG4/BBG4B/BBG19) circuit packs.

`m-{1-12} to f`
Starting with FiberReach Release 4.0, Allowed when Main slots are equipped with 29-type OLIU circuit packs, and function group FN is equipped with DS3 (BBG4, BBG4B, and BBG19).

`m-1 to f` Starting with FiberReach Release 4.0, Allowed when Main slots are equipped with 26-type OLIU circuit packs, and function group FN is equipped with DS3 (BBG4, BBG4B, and BBG19).

`m-{1,12} to m-{1,12}`
Starting with FiberReach Release 4.0, Allowed to cross-connect pass-through signals when Main slots are equipped with 29-type OLIU circuit packs. `Address1` and `Address2` must be the identical time slot.

If this command is invoked using addresses where active cross-connections already exist, the following denial message will be displayed:

```
SACC
/* Status, Already Cross-Connected */
/* Establishing new cross-connections requires that
   existing cross-connections associated with these
   addresses be deleted. */
```

If the cross-connection request includes an invalid circuit pack type, invalid port address, or specifies a cross-connection not supported by the system, the following denial message will be displayed:

```
SNVS
/* Status, Not in Valid State */
/* Invalid cross-connection request. */
```

If the addresses indicate a pass-through cross-connection and the CrsType is not **`twoway`**, the request is denied with the following message:

```
   SNVS
   /* Status, Not in Valid State */
   /* Invalid cross-connection request */
```

If an attempt is made to execute this command, when a mix of incompatible OLIU packs exists in Main, the request will be denied with the following message:

```
SNVS
/* Status, Not in Valid State */
/* Both main slots must be equipped with compatible OLIU packs. */
```

After entering this command, the following confirmation message is displayed.

```
/* Caution!  Network cross-connections are affected by this command.
   You have selected the ent-crs-sts1 command with these parameters:

   Address1 = address
   Address2 = address
   CrsType = value

Execute? (y/n or CANcel/DELete to quit) =
```

RELATED COMMANDS

dlt-crs-sts1

rtrv-crs-sts1

NAME

ent-crs-sts3c: Enter Cross-Connection STS-3c

INPUT FORMAT

ent-crs-sts3c:*Address1*,*Address2*[:*cct*=CrsType];

DESCRIPTION

This command sets bidirectional STS-3c cross-connections between main-1 and main-2 (using the 29-type OLIU circuit packs, starting with Release 4.0), or between Main slots and function unit slots (starting with FiberReach Release 3.1). The Function unit slots must be equipped with 22-type OLIU circuit packs and the Main unit slots must be equipped with the 28 or 29-type OLIU circuit packs.

NOTE:
This command can be used in a FiberReach shelf ONLY if the shelf is equipped with 28-type or 29-type OLIU circuit packs in its Main units. The only allowed cross-connect types are Twoway.

When using the 28-type OLIU in Main, the only Twoway cross-connect allowed is Add-Drop (for 0X1).

When using the 29-type OLIU in Main, the Twoway cross-connects allowed are Pass-Through and Add-Drop (for 0X1).

All other cross-connect types are not valid at this time.

The STS-3c signals are identified (addressed) by using the first STS-1 address contained in each STS-3c signal. The following chart shows the mapping of STS-3c addresses to the internal STS-1 structure:

STS-3c Mapping Table

Interface	Address	Internal STS-1 #s
Main	m-1	1,2,3
	m-4	4,5,6 (29-type in Main)
	m-7	7,8,9 (29-type in Main)
	m-10	10,11,12 (29-type in Main)
FN	f-1	1,2,3

The input parameters are:

Address1 and *Address2*

These are the addresses of the two STS-3c channels that are to be cross-connected. Valid manual cross-connections are listed below.

m-1 to f-1 Allowed to cross-connect Twoway (add-drop) signals if the FiberReach shelf is equipped with 28-type OLIUs in its Main unit slots, and 22-type OLIUs in its Function unit slots.

m-{1,4,7,10} to m-{1,4,7,10}
Allowed to cross-connect Twoway (pass-through) signals if the FiberReach shelf is equipped with 29-type OLIUs in its Main unit slots. Address1 and Address2 must be the identical time-slot.

m-{1,4,7,10} to f-1
Allowed to cross-connect Twoway (add-drop) signals if the FiberReach shelf is equipped with 29-type OLIUs in its Main unit slots, and 22-type OLIUs in its Function unit slots.

cct CrsType specifies the cross-connection type. The only valid value is:

twoway Two-way cross-connections apply to add-drop (for 0X1 applications, using the 28G-U or 29G-U OLIU in Main and 22-type OLIU in Function) and pass through cross-connections, using the 29-type OLIUs in Main. Twoway is the default value.

If this command is invoked using addresses where active STS-3c cross-connections or active STS-1 cross-connections within the STS-3c address already exist, the following denial message will be displayed:

```
SACC
/* Status, Already Cross-Connected */
/* Establishing new cross-connections requires that
   existing cross-connections associated with these
   addresses be deleted. */
```

If the cross-connection request includes an invalid circuit pack type, invalid address, or specifies a cross-connection not supported by the system, the following denial message will be displayed:

```
SNVS
/* Status, Not in Valid State */
/* Invalid cross-connection request. */
```

The following denial message will be displayed If both MAIN slots are not equipped:

```
SNVS
/* Status, Not in Valid State */
/* Both main slots must be equipped */
```

If an attempt is made to execute this command, when a mix of incompatible OLIU packs exists in main, the request will be denied with the following message:

```
SNVS
/* Status, Not in Valid State */
/* Both main slots must be equipped with compatible OLIU packs. */
```

After entering this command, the following confirmation message is displayed.

```
/* Caution!   Network cross-connections are affected by this command.
   You have selected the ent-crs-sts3c command with these parameters:

   Address1 = address
   Address2 = address
   CrsType = value */

Execute? (y/n or CANcel/DELete to quit) =
```

RELATED COMMANDS

set-feat

rtrv-feat

set-oc3

rtrv-oc3

dlt-crs-sts3c

rtrv-crs-sts3c

rtrv-crs-sts1

NAME

ent-crs-vt1: Enter Cross-Connection VT1.5

INPUT FORMAT

ent-crs-vt1:*Address1*,*Address2*[:*cct*=CrsType][,*ring*=RingId];

DESCRIPTION

This command sets bidirectional VT1.5 cross-connections among Main and low-speed slots and may be applied to systems with various arrangements.

All cross-connections require the presence of OLIU circuit packs in the Main slots. The 26-type, 28-type (available in Release 3.1 and later) or 29-type (Release 4.0) OLIU circuit packs must be used to establish VT1.5 cross-connections.

NOTE:
Any of the 12 STS-1s on the 29G-U OC-12 interface can be selected for VT cross- connection to Function Units or for Pass-Through cross-connections.

Figure 11-1 (on the following page) shows a DDM-2000 FiberReach shelf and highlights a function unit with 28 VT1.5 signals.

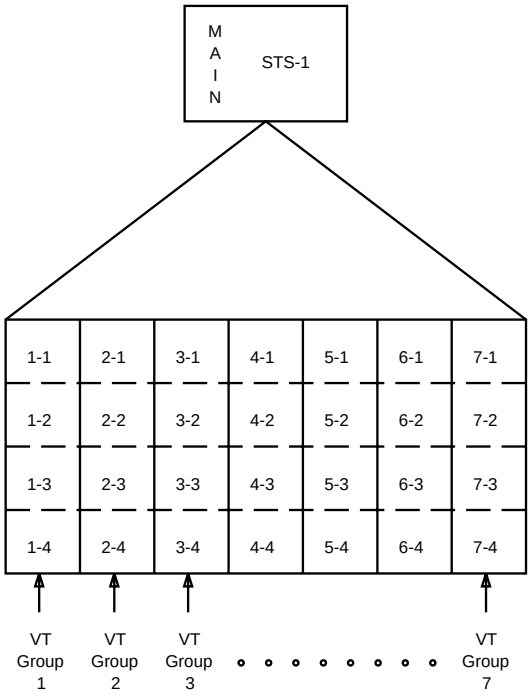

Note: Each STS-1 signal contains 28 VT1.5 signals.

Figure 11-1. DDM-2000 FiberReach Shelf with VT1.5 Signals

As highlighted in Figure 11-1, each OC-1 signal contains 1 STS-1 signal. The STS-1 signal contains 7 VT Groups of signals. Each VT Group contains 4 VT1.5 signals, and each VT1.5 signal corresponds to an individual DS1 or T1 port.

The input parameters are:

Address1 and *Address2*

These are the addresses of the two VT1.5 channels, or one VT1.5 channel and one DS1 or T1 port that are to be cross-connected. For VT1.5 ring pass-through traffic, *Address1* and *Address2* must be the same. Valid addresses are listed on the following pages.

NOTE:
All cross-connections are bidirectional.

cct

CrsType specifies the cross-connection type. The valid values are:

twoway Two-way applies to add/drop and pass-through configurations. **Twoway** is the default value for *cct*.

locked Locked cross-connections support nonpath-switched DS1 drop applications.

If the addresses indicate a pass-through cross-connection, the CrsType is not prompted for but is automatically set to **twoway**. The confirmation message indicates that a CrsType of **twoway** has been selected for the user. If a CrsType other than **twoway** is entered on the command line when the addresses indicate a pass-through cross-connection, the request is rejected. If the value `all` is used in the address, the *cct* applies to every cross-connection within the range of the addresses.

ring

RingId is the ring identification for locked cross-connections. The valid values are:

m1 Ring **m1** is the ring that is received on the Main-1 OLIU and is transmitted on the Main-2 OLIU.

m2 Ring **m2** is the ring that is received on the Main-2 OLIU and is transmitted on the Main-1 OLIU.

If the CrsType is **locked**, the RingId is always prompted for and is displayed in confirmation messages. If the CrsType is not **locked**, the RingId is not prompted for and it is not displayed in confirmation messages. If the CrsType is not **locked** and RingId is entered anyway, the value entered for RingId is ignored.

The following is a list of valid cross-connections. To successfully perform any cross-connection, the user *must* equip the Main slots with 26, 28-type (Starting with Release 3.1) or 29-type (Starting with Release 4.0) OLIU circuit packs. Where items appear in braces { }, any one (and only one) of these items may be used to form the address. The value **`all`** may be used as part of an address (allowed as indicated below) to cross-connect entire groups of signals. When **`all`** is used, no subsequent address fields should be defined.

Ring Release Cross-Connection Addresses:

`m-1-{1-7}-{1-4,all} to {a,b,c,d}-1-{1-4,all}`
Allowed when equipped with 26-type OLIUs in Main Unit slots, and the addressed Low Speed (LS) port is equipped with a DS1 circuit pack in a 1x1 protected LS configuration.

`m-{1-3}-{1-7}-{1-4,all} to {a,b,c,d}-1-{1-4,all}`
Allowed when equipped with 28-type OLIUs in Main slots (in FiberReach 2.2, 3.1 and later), and the addressed low-speed (LS) port is equipped with a DS1 circuit pack in a 1x1 protected LS configuration.

`m-{1-12}-{1-7}-{1-4,all} to {a,b,c,d}-1-{1-4,all}`
Allowed when equipped with 29-type OLIUs in Main slots (FiberReach Release 4.0) and the addressed low-speed (LS) port is equipped with a DS1 circuit pack in a 1x1 protected LS configuration.

`m-{1-12}-{1-7,all}-{1-4,all} to {a,b,c}-{1,2}-{1-4,all}` or

`m-{1-12}-{1-7,all}-{1-4,all} to d-1-{1-4,all}`
Allowed when equipped with 29-type OLIUs in Main unit slots, and the addressed low-speed (LS) port is equipped with a DS1 circuit pack in a 1x7 protected LS configuration.

`m-1-{1-7,all}-{1-4,all} to {a,b,c}-{1,2}-{1-4,all}` or

`m-1-{1-7,all}-{1-4,all} to d-1-{1-4,all}`
Allowed when equipped with 26-type OLIUs in Main unit slots, and the addressed low-speed (LS) port is equipped with a DS1 circuit pack in a 1x7 protected LS configuration.

`m-{1-3}-{1-7,all}-{1-4,all} to {a,b,c}-{1,2}-{1-4,all}` or

`m-{1-3}-{1-7,all}-{1-4,all} to d-1-{1-4,all}`
When equipped with 28-type OLIUs in Main slots (in FiberReach 3.1 and later), and the addressed low-speed (LS) port is equipped with a DS1 circuit pack in a 1x7 protected LS configuration.

`m-1-{1-7,all}-{1-4,all} to m-1-{1-7,all}-{1-4,all}`
Allowed when the shelf is equipped with 26-type OLIUs in Main unit slots, (allows pass-through connections). The two addresses must be the same.

`m-{1-3}-{1-7,all}-{1-4,all} to m-{1-3}-{1-7,all}-{1-4,all}`
Allows pass-through cross-connections when equipped with 28-type OLIUs in Main slots (in FiberReach 3.1 and later). The two addresses must be the same.

`m-{1-12}-{1-7,all}-{1-4,all} to m-{1-12}-{1-7,all}-{1-4,all}`
Allows pass-through cross-connections when equipped with 29-type OLIUs in Main slots (in FiberReach 4.0 and later) The T1EXT (BBF6) circuit pack supports two T1 ports. When addressing ports on a BBF6, only port numbers 1 and 2 are valid. Specifying `all` selects ports 1 and 2 only.

If the cross-connection request includes an invalid circuit pack type, invalid port address, or specifies a cross-connection not supported by the system, the following denial message will be displayed:

```
SNVS
/* Status, Not in Valid State */
/* Invalid cross-connection request. */
```

If the cross-connection request includes **`all`** in the addresses and the addresses do not have a one-to-one relationship, the following denial message will be displayed:

```
SNVS
/* Status, Not in Valid State */
/* Invalid cross-connection request. */
```

In ring systems, if this command is issued and one of the Main slots is not equipped, the following denial message will be displayed:

```
SNVS
/* Status, Not in Valid State */
/* Both main slots must be equipped. */
```

When setting up a path-protected hairpin local drop cross-connection, both slots of the function unit to which the OC-1 ring is terminated must be equipped with 27G2-U or 26G2-U OLIU circuit packs. Otherwise the following denial message will be displayed:

```
SNVS
/* Status, Not in Valid State */
/* Both FN slots terminating the OC-1 ring must be
   equipped with 27G2-U or 26G2-U OLIU circuit packs.  */
```

If this command is invoked using addresses where active cross-connections already exist, the following denial message will be displayed:

```
SACC
/* Status, Already Cross-Connected */
/* Establishing new cross-connections requires that existing
   cross-connections associated with these addresses must
   be deleted first. */
```

If this command is entered with several addresses (for example, when an address of **`all`** is used) and one or more of these addresses are already cross-connected, the command will complete but send the following message indicating the requested cross-connections that could not be completed because of previously existing cross-connections:

```
/* The following cross-connections not processed.
   Cross-connect exists with different address:
   Address1  Address2
   Address1  Address2
      .         .
      .         .    */
```

When the command is entered with several addresses (for example, when an address of **`all`** is used), but one or more of these addresses is already cross-connected, the following response message will be displayed:

```
/* The following cross-connections were not processed
   because the address or cross-connection type did not match
   Address1  Address2  CrsType
   Address1  Address2  CrsType
      .         .         .
      .         .         .
```

If the addresses indicate a pass-through cross-connection and the CrsType is not **`twoway`**, the request is denied with the following message:

```
SNVS
/* Status, Not in Valid State */
/* Invalid cross-connection request */
```

After entering this command, the following confirmation message is displayed. If CrsType is not **`locked`**, RingId is not displayed in the following confirmation message:

```
/* Caution!  Network Cross-connections are affected by this command.
   You have selected the ent-crs-vt1 command with these parameters:

   Address1 = address
   Address2 = address
   CrsType = value
   RingId = value */

Execute? (y/n or CANcel/DELete to quit) =
```

If this command is entered with the parameter *all* as part of the address, the following confirmation message is displayed. If CrsType is not **locked**, RingId is not displayed in the confirmation message.

```
/* Caution! Execution of this command may affect service.
   Multiple cross-connections may be affected.
   You have selected the ent-crs-vt1 command with these parameters:

   Address1 = address
   Address2 = address
   CrsType = value
   RingId = value */

Execute? (y/n or CANcel/DELete to quit) =
```

RELATED COMMANDS

dlt-crs-vt1

rtrv-crs-vt1

NAME

ent-tl1msgmap: Enter Tl1 Message Map for Operation Systems

INPUT FORMAT

ent-tl1msgmap:acid=*ACID*,**msgtype=***MessageType*,**action=***Action*;

DESCRIPTION

NOTE:
If security is enabled on any CIT or DCC port on a shelf, then this command is available to privileged users only for all CIT or DCC ports on the shelf.

This command maps the DDM-2000 TL1 message types to the operations systems (OS) for this network element in the subnetwork. This command provides a filter for TL1 messages by specifying TL1 message classes (known as *MessageTypes*) and allowing the user to determine which message classes should be received at each type of OS (specified in the *ACID* parameter).

There are default message classes that exist for the ACIDs supported by DDM-2000. The following table shows the default mappings supported by DDM-2000. Most users should be able to use these mappings as defined. However, users may change the default mapping by using this command. Users may check the current provisioning by using the **rtrv-tl1msgmap** command.

The following table displays the default mappings:

```
/* DDM-2000 TL1 Autonomous Message Map
=====================================================
    ACID                 ALM ENV CON DB  EVT PM  SW
=====================================================
tl1Maintenance          | x | x | x |   | x | x | x |
tl1MemoryAdministration |   |   |   | x |   |   |   |
tl1Test                 |   |   |   |   |   |   |   |
tl1PeerComm             |   |   |   |   |   |   |   |
tl1Other1               | x | x | x | x | x |   | x |
tl1Other2               |   |   |   |   |   |   |   |

      x - enabled
<blank> - disabled
*/
```

Each message type can be assigned to more than one ACID. However, if more than one assignment is made, a 9600 or higher baud x.25 link is recommended.

The input parameters are:

ACID Application Context ID (ACID) is a string of up to 23 alphanumeric characters, which is the OS function. The valid ACID values are:

tl1Maintenance
(This identifies the *maintenance* OS type).

tl1MemoryAdministration
(This identifies the *memory~administration* OS type).

tl1Test (This identifies the *testing* OS type).

tl1PeerComm
(This identifies the OS type for peer TL1 communications. This ACID is also used for incoming X.25 SVC DTE calling addresses that do not match any of the user-provisioned X.25 SVC DTE calling addresses).

tl1Other1
(This identifies the *RIDES* OS type).

tl1Other2
(This identifies an OS type for future use).

msgtype MessageType is one of the supported classes of TL1 messages that the system generates. These message types are *not* sent to the OS unless they are enabled and associated with an ACID. The supported message types are:

ALM To report the occurrence of an event that requires immediate attention by the craft at the OS. Report is sent via the `REPT ALM` message.

ENV To report the occurrence of an environmental alarm to the OS. Report is sent via the `REPT ALM ENV` message.

CON To report the active status conditions at the network element. Report is sent via the `REPT COND` message.

DB To report database changes that have occurred as a result of line termination and cross-connection provisioning commands and changes due to external events such as circuit pack insertion or removal. Report is sent via the `REPT DBCHG` message.

EVT To report events that do not require alarmed notifications or to report a status change of the network element. Report is sent via the `REPT EVT` message.

PM To report performance monitoring data from the network element. Report is sent via the `REPT PM` message.

SW To report equipment protection switches at the network element. Report is sent via the `REPT SW` message.

`action` Action is either **`enabled`** or **`disabled`** and associates the MessageType to the OS.

When this command is entered, the following confirmation message will be displayed:

```
/* Caution!  Operations Systems Autonomous message mapping is
   affected by this command.

   You have selected the ent-tl1msgmap command with these parameters:

    ACID = x
    MessageType = x
    Action = x           */

Execute? (y/n or CANcel/DELete to quit) =
```

RELATED COMMANDS

rtrv-tl1msgmap

NAME

ent-ulsdcc-l3: Enter Upper Layer Section DCC - Layer 3

INPUT FORMAT

ent-ulsdcc-l3:[**L3org=***OrganizationId*][,**L3res=***Reserved*]
[,**L3rd=***RoutingDomain*][,**L3rarea=***RoutingArea*]

DESCRIPTION

NOTE:
This command page describes the functionality of the **ent-ulsdcc-l3** command in FiberReach Release 3.0 and all later TARP releases.

CAUTION:
Errors in provisioning this command to change the NSAP address of the target Network Element (NE) could result in silent failures. Command parameters should only be changed by users who intend and are authorized to provision the SONET subnetwork and partition DCC communications.

This command provisions parameters of Layers 3 of the open systems interconnection (OSI) 7-layer protocol stack. This stack refers to the OSI reference model which is a logical structure for network operations. This model defines a standard communication protocol between network elements as specified by the International Standards Organization (ISO).

If this command is used to change the value of at least one of the fields of Layer 3 NSAP address, it will cause the NE to reset. this action will erase all of the performance monitoring data and the history file. If possible, the NE will reinitialize the date and time. Otherwise, the date and time will assume default values.

This command is used to provision the user-settable fields in Layers 3 of the OSI stack. Layer 3 parameters include user-settable fields of the network service access point (NSAP) address The NSAP address is a 20-byte (40 hex digit) address required by OSI to provide unique identification within the OSI network. Some of the fields within the NSAP are pre-defined and some others are user-settable. Each DDM-2000 is programmed with a unique NSAP address at the factory.

All Layer 3 parameters that can be provisioned using this command, and that are needed for the operation of the NE, have original values. Hence, it is not necessary to provision these parameters for the NE to operate properly in a network.

NOTE:
If security is enabled, then this command is available to privileged users only for all CIT or DCC ports on the shelf.

The structure of the NSAP is shown in the following display. The field names are shown on the first row, and the size (in bytes) of each field is listed on the second row.

NSAP Structure

NSAP Field:	AFI	IDI	IDI PAD	DFI	Org. ID	RES	RD	Area	Sys. Id.	SEL
Bytes:	1	2		1	3	2	2	2	6	1
Default Value: (hex)	39	840	F	80	000000	0000	0000	0000	none	00
	not provisionable				user provisionable				not provisionable	

The AFI, IDI and DFI (DSP Format Identifier) fields are not user provisionable. They are always set to "39" hex, "840" hex, "F" hex and "80" hex respectively to indicate that the ISO DCC syntax shall be used.

The Organization ID, Reserved (RES), Routing Domain (RD) and Area fields are user provisionable when setting the NSAP of the target NE.

The Organization ID field is a three byte field that identifies the Network Service Provider and is assigned by the ANSI. The Reserved field is currently not used and has a default value of hex "0000". The Routing Domain and Area fields, each of which are 2 bytes (4 hex digits), area is used in applications where there are multiple Level-1 areas to identify the different areas.

Each NE is programmed with a unique System Identifier at the factory. This six byte (12 hex digit) field of the NSAP guarantees that the NSAP for each NE is unique.

The Select (SEL) field is currently not user provisionable and is normally set to a default value of "0". Its purpose is to differentiate between multiple NSAP addresses associated with the same End system. Its value is not fixed but is set in a PDU according to its usage. It is set to "af" hex when TARP is run over CLNP. It has a value of "1d" hex when TP4 is run over CLNP. it may be set to "00" hex for other uses. When retrieved and displayed, it will always be shown as "00" hex.

For additional information on provisioning, refer to 824-102-144, *2000 Product Family Operation Interworking Guide for TARP Releases*.

The input parameters are:

`L3org` Organization Id is a 6-digit hexadecimal field used to provision into the NSAP address the allocated company code assigned by the *ANSI**-administered USA Registration Authority for OSI Organization Names. The original value for this parameter is 000000.

`L3res` Reserved is a 4-digit hexadecimal field that currently has not been assigned a specific purpose by the SONET standards. Users may populate this field to further uniquely identify the NSAP address. The original value for this parameter is 0000.

`L3rd` This field identifies a unique routing domain within an administrative domain.

The format of this parameter is **`L3rd=`***`RoutingDomain`*, where *`RoutingDomain`* is the 2 byte (4-digit hex) NSAP Routing Domain field of the local NE. The original value for this parameter is 0000.

`L3area` This field identifies the area within the routing domain to which the NSAP address belongs.

The format of this parameter is **`L3area=`***`RoutingArea`*, where *`RoutingArea`* is the 2 byte (4-digit hex) NSAP Area field of the local NE. The original value for this parameter is 0000.

If an incorrect number of digits is entered for a specific NSAP parameter, the following message is issued and the user is reprompted:

```
/* Invalid data entry
   Enter a <num> digit hexadecimal number */
```

The `<num>` specifies the number of digits required.

* Registered trademark of the American National Standards Institute, Inc.

After entering this command the following confirmation message is displayed:

```
/* Caution!  Network Element access is affected by this command.

   Caution! When executed, this command will cause the NE to
   restart the program.  This action will erase all of the
   performance monitoring data and the history file.  If possible,
   it will reinitialize the date and time with the far end via the DCC.
   Otherwise, the date and time will assume default values.

   You have selected the ent-ulsdcc-l3 command with these parameters:

   L3org     = OrganizationId
   L3res     = Reserved
   L3rd      = RoutingDomain
   L3area    = RoutingArea

Execute?  (y/n or CANcel/DELete to quit) =
```

NOTE:
This command executes immediately upon entering it; however the changes may not be refected in the **`rtrv-map-neighbor`** report for up to 20 minutes after this command is executed.

If the user enters the same parameter values as currently defined for the "L3" parameters, the system does not reset.

RELATED COMMANDS

dlt-ulsdcc-l4

ent-ulsdcc-l4

rtrv-ulsdcc-l3

rtrv-ulsdcc-l4

NAME

ent-ulsdcc-l4: Enter Upper Layer Section DCC - Layer 4

INPUT FORMAT

ent-ulsdcc-l4:[**L4tlif=***LifeTime*][[[,**L4ajsys=***AJSystemId*]
[[,**L4ajorg=***AJOrganizationId*] [,**L4ajres=***AJReserved*]
[,**L4ajrd=***AJRoutingDomain*][,**L4ajarea=***AJRoutingArea*]]]]
[[,**L4t1tm=***TimerT1*][,**L4t2tm=***TimerT2*] [,**L4t3tm=***TimerT3*]
[,**L4t4tm=***TimerT4*][,**L4lftm=***LDBFlushTimer*]]
[[,**L4etdc=***L4etdc*][[,**L4tdcsys=***L4tdcSystemId*][[,**L4tdctid=***L4tdctid*]
[,**L4tdcorg=***L4tdcOrganizationId*][,**L4tdcres=***L4tdcReserved*]
[,**L4tdcrd=***L4tdcRoutingDomain*][,**L4tdcarea=***L4tdcRoutingArea*]]]];

DESCRIPTION

NOTE:
This command page describes the functionality of the **ent-ulsdcc-l4** command in FiberReach Release 3.0 and all later TARP releases.

CAUTION:
Errors in provisioning this command to change the NSAP address of the target Network Element (NE) could result in silent failures. Command parameters should only be changed by users who intend and are authorized to provision the SONET subnetwork and partition DCC communications.

This command provisions parameters of Layers 4 of the open systems interconnection (OSI) 7-layer protocol stack. This stack refers to the OSI reference model which is a logical structure for network operations. This model defines a standard communication protocol between network elements as specified by the International Standards Organization (ISO).

This command is used to provision the user-settable fields in Layer 4 of the OSI stack. The NSAP address is a 20-byte address required by OSI to provide unique identification within the OSI network. Some of the fields within the NSAP are pre-defined and some others are user-settable. Each DDM-2000 is programmed with a unique NSAP address at the factory.

User-settable Layer 4 parameters are used to enter TARP Manual Adjacencies. Manually specifying a NE to be logically adjacent to local NE, for TARP propagation purposes requires the specification of the adjacent NEs NSAP address. The NSAP, which is 20 bytes long (40 hex digit), is composed of separate fields, most of which have default values. Thus, to simplify the entry of the NSAP address, the NSAP is entered via a number of separate TARP Manual Adjacency NSAP parameters; those parameters are covered in a later section of this command page.

Multiple TARP Manual Adjacent NE values are entered using multiple occurrences of this command.

All Layer 4 parameters that can be provisioned using this command, and that are needed for the operation of the NE, have original values. Hence, it is not necessary to provision these parameters for the NE to operate properly in a network.

NOTE 1:
A maximum of two Manual Adjacencies can be initiated from a Network Element.

NOTE 2:
If security is enabled, then this command is available to privileged users only for all CIT or DCC ports on the shelf.

The structure of the NSAP is shown in the following display. The field names are shown on the first row, and the size (in bytes) of each field is listed on the second row.

NSAP Structure

NSAP Field:	AFI	IDI	IDI PAD	DFI	Org. ID	RES	RD	Area	Sys. Id.	SEL
Bytes:	1	2		1	3	2	2	2	6	1
Default Value: (hex)	39	840	F	80	000000	0000	0000	0000	none	00
	not provisionable				user provisionable				not provisionable	

The AFI, IDI and DSI (DSP Format Identifier) fields are not user provisionable. They are always set to "39" hex, "840" hex, "F" hex and "80" hex respectively to indicate that the ISO DCC syntax shall be used.

The Organization ID, Reserved (RES), Routing Domain (RD) and Area fields are user provisionable when entering a TARP Manual Adjacency NSAP and when entering an NSAP into the TARP Data Cache (TDC).

The Organization ID field is a three byte field that identifies the Network Service Provider and is assigned by the ANSI. The Reserved field is currently not used and has a default value of hex "0000". The Routing Domain and Area fields, each of which are 2 bytes (4 hex digits), area used in applications where there are multiple Level-1 areas to identify the different areas.

Each NE is programmed with a unique System Identifier at the factory. This six byte (12 hex digit) field of the NSAP guarantees that the NSAP for each NE is unique.

The Select (SEL) field is currently not user provisionable and is normally set to a default value of "0". Its purpose is to differentiate between multiple NSAP addresses associated with the same End system. Its value is not fixed but is set in a PDU according to its usage. It is set to "af" hex when TARP is run over CLNP. It has a value of "1d" hex when TP4 is run over CLNP. It may be set to "00" hex for other uses. When retrieved and displayed, it will always be shown as "00" hex.

For additional information on provisioning, refer to 824-102-144 *2000 Product Family Operation Interworking Guide for TARP Releases*.

The user-settable input parameters are:

`L4tlif` This parameter sets the TARP lifetime parameter in TARP PDUs originated by the local NE. The TARP lifetime specifies the maximum number of hops allowed for a TARP PDU. When this number of hops is exceeded, the TARP PDU will not be forwarded. This parameter may have a value in the range from 1 to 65535. An error message will be returned if a value of 0 is entered. The default value for this parameter is 100 in decimal.

`L4ajsys` This parameter is used to provision the NSAP System Identifier field of the TARP adjacent NE. This is a 6 byte (12 hex digit) field of the TARP adjacent NE. No default value is assumed for this parameter.

NOTE:
The NSAP System Id field, **`L4ajsys`**, which is unique for each NE, is the only parameter that is required to enter a manual adjacency.

If this parameter is specified, then any of the other user settable NSAP field parameters that are not specified and NSAP fields that are not settable by the user (IDP, DFI and SEL fields) are set to their default values in the TARP Manual Adjacency list. These default values shall be the equivalent NSAP fields of the local NE. If no value is specified for **`L4ajsys`** parameter, the user will not be prompted for the rest of the **`L4aj`** parameters.

`L4ajorg` This parameter is used to provision the NSAP Organization Id field of the TARP adjacent NE. This is a 3 byte (6-digit hex) field of the TARP adjacent NE. The default value for this parameter is the value of the NSAP Organization Id field of the local NE.

`L4ajres` This parameter is used to provision the NSAP Reserved field of the TARP adjacent NE. This is a 2 byte (4-digit hex) field of the TARP adjacent NE. The default value for this parameter is the value of the NSAP Reserved field of the local NE.

`L4ajrd` This parameter is used to provision the NSAP Routing Domain field of the TARP adjacent NE. This is a 2 byte (4-digit hex) field of the TARP adjacent NE. The default value for this parameter is the value

of the NSAP Routing Domain field of the local NE.

`L4ajarea` This parameter is used to provision the NSAP Area field of the TARP adjacent NE. This is a 2 byte (4-digit hex) field of the TARP adjacent NE. The default value for this parameter is the value of the NSAP Area field of the local NE.

`L4t1tm` This parameter is used to provision the TARP Timer T1. T1 is the maximum time waiting for response to TARP Type 1 request PDU (search level 1 routing area). This parameter may have a value in the range from 1 to 3600 seconds. Its default value is 15 seconds.

`L4t2tm` This parameter is used to provision the TARP Timer T2. T2 is the maximum time waiting for response to TARP Type 2 request PDU (search outside of level 1 area). This parameter may have a value in the range from 1 to 3600 seconds. Its default value is 25 seconds.

`L4t3tm` This parameter is used to provision the TARP Timer T3. T3 is the maximum time waiting for response to Address resolution request (type 5, for example, requesting the TID when the NSAP address is known). This parameter may have a value in the range from 1 to 3600 seconds. Its default value is 40 seconds.

`L4t4tm` This parameter is used to provision the TARP Timer T4. T4 starts when T2 expires. It is used for error recovery. This parameter may have a value in the range from 1 to 3600 seconds. Its default value is 20 seconds.

`L4lftm` This parameter is used to provision the TARP Loop Detection Buffer Flush Timer. It sets the time period for flushing the TARP Loop Detection Buffer. This parameter may have a value in the range from 1 to 1440 minutes. Its default value is 5 minutes.

`L4etdc` This parameter is used to Enable or Disable the TARP Data Cache. Possible values are either **`enable`** or **`disable`**. The default value is **`enable`**.

The following set of parameters are used to enter data manually into the TARP Data Cache. An entry in a TARP Data Cache consists of three parameters: The NSAP address, the Target Identifier (TID) and the address type of an NE. The NSAP, which is 20 bytes long (40 hex digit), is composed of separate fields, most of which have default value. To simplify the entry of the NSAP address, the NSAP is entered via a number of separate TDC NSAP parameters as follows:

`L4tdcsys` This parameter is used to provision the NSAP System Identifier field of the NE to be manually entered into the TARP Data Cache. If this parameter is specified, then **`L4tdctid`** must also be specified for the entry to be made in the TARP Data Cache.

This is a 6 byte (12 hex digit) field of the NE to be manually entered into the TARP Data Cache. There is no default value for this parameter.

NOTE:
The NSAP System ID field, **`L4tdcsys`**, which is unique for each NE, is the only parameter that is required to enter a TARP data cache entry.

If this parameter is specified, then any of the other user settable NSAP field parameters that are not specified and NSAP fields that are not settable by the user (IDP, DFI and SEL fields) are set to their default values in creating the NSAP portion of the TARP Data Cache entry. Those default values will be the equivalent NSAP fields of the local NE.

If no value is specified for **`L4tdcsys`** parameter, the user will not be prompted for the rest of the **`L4tdc`** parameters.

`L4tdctid` This parameter is used to provision the Target Identifier (TID) portion of TARP Data Cache entry for manually entering data into the TARP Data Cache (TDC). It indicates the TID of the NE associated with the TDC NSAP address parameters that are specified. This parameter has a maximum of 20 characters and it has no default value.

If L4tdctid is specified, then L4tdcsys must have also been specified for the entry to be made in TARP Data Cache.

Along with the TDC NSAP, this parameter is required to enter a set of data into the TDC. Both the NSAP parameters and L4tdctid need to be specified for the transaction to be complete. This will enter a single row of data into the TDC. Multiple rows of data are entered using multiple occurrences of **`ent-ulsdcc-l4`**.

NOTE:
If the set of specified NSAP and TID does not already exist in the TDC, then the data is added to the TDC. If the NSAP-TID pair already exists in the TDC, then no action is taken.

`L4tdcorg` This parameter is used to provision the NSAP's Organization Id field of the NE that is to be manually entered into the TDC. It specifies the allocated Network

Services Provider Code assigned by the ANSI-administered USA Registration Authority for OSI Organization Names. The default value for this parameter is the NSAP's Organization ID field of local NE.

L4tdcres This parameter is used to provision the NSAP Reserved field of the NE to be manually entered into the TDC. This is a two byte (4-digit hex) NSAP Reserved field of the NE that is to be manually entered into the TDC. The default value for this parameter is the NSAP's Reserved field of local NE.

L4tdcrd This parameter is used to provision the NSAP Routing Domain field of the NE to be manually entered into the TDC. This is a 2 byte (4-digit hex) NSAP Routing Domain field of the NE to be manually entered into the TDC. The default value for this parameter is the NSAP's Routing Domain field of local NE.

L4tdcarea
This parameter is used to provision the NSAP Area field of the NE to be manually entered into the TDC. It identifies the Area within the Routing Domain to which the NSAP address belongs. This is a 2 byte (4-digit hex) NSAP Area field of the NE to be manually entered into the TDC. The default value for this parameter is the NSAP's Area field of local NE.

If an incorrect number of digits is entered for a specific NSAP parameter, the following message is issued and the user is reprompted:

```
/* Invalid data entry
   Enter a <num> digit hexadecimal number */
```

The `<num>` specifies the number of digits required.

If an invalid *L4tlif* value is entered (that is, a value equal to or less than 0, or a value greater than 65535), the following message is displayed and the user is reprompted:

```
/* Invalid data entry
   Invalid L4tlif value entered. */
```

If an invalid *L4t1tm*, *L4t2tm*, *L4t3tm*, *L4t4tm* or *L4lftm* value is entered (for example, a value equal to or less than 0), the following message is displayed and the user is reprompted:

```
/* Invalid data entry. */
```

If an invalid *L4TDCTID* value, or no *L4TDCTID* value is entered, the following message is displayed and the user is reprompted:

```
/* Invalid data entry
   Invalid L4TDCTID value entered. */
```

After entering this command the following confirmation message is displayed:

```
/* You have selected the ent-ulsdcc-l4 command with these parameters:

   L4tlif    = LifeTime
   L4ajsys   = AJSystemId
   L4ajorg   = AJOrganizationId
   L4ajres   = AJRserved
   L4ajrd    = AJRoutingDomain
   L4ajarea  = AJRoutingArea
   L4t1tm    = TimerT1
   L4t2tm    = TimerT2
   L4t3tm    = TimerT3
   L4t4tm    = TimerT4
   L4lftm    = LDBFlushTimer
   L4etdc    = L4etdc
   L4tdcsys  = L4tdcSystemId
   L4tdctid  = L4tdctid
   L4tdcorg  = L4tdcOrganizationId
   L4tdcres  = L4tdcReserved
   L4tdcrd   = L4tdcRoutingDomain
   L4tdcarea = L4tdcRoutingArea

Execute?  (y/n or CANcel/DELete to quit) =
```

If the user changes the value of any "L4" parameter or enters the same parameter values as currently defined for the "L3" parameters, the system does not reset.

RELATED COMMANDS

ent-ulsdcc-l3

rtrv-ulsdcc-l3

rtr-vulsdcc-l4

dlt-ulsdcc-l4

NAME

help: Provide In-context Help

INPUT FORMAT

?

DESCRIPTION

Help (**?**) provides help within a craft dialog on the CIT. Help is provided automatically when an invalid input is entered and can also be requested at any time by typing "**?**". The "**?**" displays a help message and then displays another prompt.

The help message is either a description of format of the required entry or a menu of choices.

NAME

init-pm: Initialize Performance Monitoring (PM)

INPUT FORMAT

`init-pm:reg=`*`Register`*;

DESCRIPTION

This command initializes all current day and/or all current quarter-hour performance-monitoring storage registers. Registers for previous day and previous quarter-hours are not affected.

NOTE:
If security is enabled on any CIT or DCC port on a shelf, then this command is available to privileged users only for all CIT or DCC ports on the shelf.

The input parameter is:

`reg` Register is the class of registers to be initialized and may be one of the following:

- **`day`** Day registers
- **`qh`** Quarter-hour registers
- **`all`** Day and quarter-hour registers

RELATED COMMANDS

rtrv-pm-line

rtrv-pm-sect

rtrv-pm-sts1

rtrv-pm-tca

NAME

init-sys: Initialize System

INPUT FORMAT

`init-sys`:*`Address`*;

DESCRIPTION

CAUTION:
Execution of this command may affect service. The command **`init-sys:all`** *should NOT be used on an in-service system. This command should only be used at the end of installation before system turnup.*

This command initializes provisionable parameters to their default values. The time and date parameters are reset from the far end.

NOTE:
After entering the **`init-sys`** command, the system will show transient DCC failures that are recorded in the Alarm and History reports. This is a normal, expected system response.

The command **`init-sys:all`** should be used only at the end of installation before system turnup. The command **`init-sys:sysctl`** should only be used after a SYSCTL is replaced. To clear a system problem, the **`reset`** command should be used, since it resets the system software without changing the provisioned parameters except for the page parameter in **`set-link`**, which is reset to default value in this case.

NOTE:
This command is available to privileged users only.

The input parameter is:

`Address` Address determines whether just system controller parameters are initialized or whether all parameters on the entire system are initialized. Address may have the following values:

`sysctl` The address **`sysctl`** can be used after a system controller is replaced on an in-service system. It is the equivalent of pressing the UPD/INIT button within 10 seconds of the processor start-up sequence (while the CR LED on the user panel is flashing). This command restores the following list of parameters to their default values:

NOTE:
Parameters can be provisioned using the following commands listed below the parameters.

Alarm delays
`set-attr-alm`

NSAP

Starting with FiberReach Release 3.0 and later TARP releases, the following additional parameters will be affected as well:
L4ajorg, L4ajres, L4ajrd, L4ajarea, L4ajsys
L3lv2is
L4tlif
L4t1tm, L4t2tm, L4t3tm, L4t4tm, L4lftm
L4etdc
`ent-ulsdcc-l3`
`ent-ulsdcc-l4`

Security
`set-lgn`
`set-passwd`
`set-secu`

CIT link configuration
`set-link`

Protection Switching
(`inhibit, forced, lockout, manual`)
switch-ls
switch-sync

`Performance monitoring thresholds`
`set-pmthres-sect`
`set-pmthres-line`
`set-pmthres-sts1`
`set-pmthres-t1`
`set-pmthres-vt1`

Environmental alarm names and alarm levels
`set-attr-env`

Environmental control names
`set-attr-cont`

Far-end communications enabled/disabled
`set-fecom`

Idle value, Alarm Group
`set-ne`

In FiberReach Release 3.0 and later TARP releases, the Alarm Group parameter will not be part of the **`set-ne`** provisioning parameters, and therefore will not be affected by this command.

`all` The address **`all`** is used only at the end of an installation before turning over the system. This ensures that all parameters in the system have the proper default values before any system-specific provisioning is done.

CAUTION:
The address **`all`** *should NOT be used on an in-service system.*

NOTE:
The **`init-sys:all`** command is available to privileged users only.

This parameter initializes all the parameters listed under **`sysctl`** PLUS the following:

Loopbacks
`opr-lpbk-t1`

Cross-connections
`dlt-crs-vt1`
`ent-crs-vt1`

OC-1 signal degrade threshold
`set-oc1`
`set-sts1`
`set-vt1`

Signal failure thresholds
`set-t1`

Protection Switching (`manual`)
`switch-ls`
`switch-sync`

Feature Options
`set-feat`

System name (TID)
`set-ne`

PMN
`set-attr-alm`

Site Id, NE Id — In FiberReach Release 3.0 and later TARP releases, the Site Id and NE Id parameters will not be available, and therefore are not affected by

this command.

`set-ne`

TBOS and CO/RT selection — In FiberReach Release 3.0 and later TARP releases, the TBOS parameter will not be available, and therefore it will not be affected by this command.

`set-ne`

UserSide/NetworkSide settings on DCC
DCC Channel IAO LAN

`set-fecom`

Low-Speed Protection Mode

The low-speed protection mode is set to match the installed low-speed protection assembly. If no valid protection assembly can be detected, the low-speed protection mode defaults to 1x7.

In addition to initializing parameters, entering the address **`all`** will clear all performance monitoring data and alarms. For failure conditions that still exist after parameters are initialized, the alarms will be redeclared. Time and date parameters are not affected by this command.

Executing an **`init-sys:sysctl`** with no main OLIU packs equipped will set the following parameters to default values:

Feature Options

Directory Services Network Element (DSNE) — In FiberReach Release 3.0 and later TARP releases, the DSNE parameter will not be part of the **`set-ne`** provisioning parameters, and therefore will not be affected by this command.

System name (TID)

PMN

Site Id, NE Id — In FiberReach Release 3.0 and later TARP releases, the Site Id and NE Id parameters will not be part of the **`set-ne`** provisioning parameters, and therefore will not be affected by this command.

TBOS Address — In FiberReach Release 3.0 and later TARP releases, the TBOS Address parameter will not be part of the **`set-ne`** provisioning parameters, and therefore will not be affected by this command.

TBOS Enabled — In FiberReach Release 3.0 and later TARP releases, the TBOS Enabled parameter will not be part of the **`set-ne`** provisioning parameters, and therefore will not be affected by this command.

TBOS link — In FiberReach Release 3.0 and later TARP releases, the TBOS link parameter will not be part of the **`set-ne`** provisioning parameters, and therefore will not be affected by this command.

CO/RT selection

UserSide/NetworkSide settings on DCC

DCC channel enable/disable

When the command **`init-sys:sysctl`** is entered, the following confirmation message will be displayed:

```
/* CAUTION!
   Execution of this command will set ALL parameters on the
   controller to their original default values.
   This may disrupt this system's operations interfaces.
   Refer to the DDM-2000 User/Service Manual before executing
   this command.

   Caution!  When executed, this command causes the NE to
   restart the program.  This action will erase all of
   the performance monitoring data and the history file,
   and reinitialize the date and time with the far end
   system.

   Proceed with EXTREME CAUTION!

   You have selected the init-sys command with these parameters:

   Address = sysctl */
Execute? (y/n or CANcel/DELete to quit) =
```

NOTE:
Executing **`init-sys:sysctl`** may cause the system to respond with the following message: `Parameters set to default values.` This means that the circuit pack in a specified slot has failed or has been removed, and the parameters for ports associated with that slot have been set to their default values.

Entering the command **`init-sys:all`** will cause the following confirmation message to be displayed:

```
/* CAUTION!

   THIS COMMAND SHOULD NEVER BE EXECUTED ON AN IN-SERVICE SYSTEM!

   This command will set ALL parameters in the whole system
   to their original default values.
   This may result in a lengthy service outage and may disrupt
   this system's operations interfaces.

   Caution!  When executed, this command causes the NE to
   restart the program.  This action will erase all of
   the performance monitoring data and the history file,
   and reinitialize the date and time with the far end
   system.

   PROCEED WITH EXTREME CAUTION!

   You have selected the init-sys command with these parameters:

   Address = all */
Execute? (y/n or CANcel/DELete to quit) =
```

RELATED COMMANDS

reset

upd

NAME

ins-prog: Install Program

INPUT FORMAT

`ins-prog:`*`TID;`*

DESCRIPTION

This command installs a new program into the system controller. This command supports a local program installation to a network element from a personal computer (PC) connected to the CIT port of the target system. The command **`cpy-prog`** is used to copy the system controller program from a local network element to a remote network element.

The software to be installed may be a non-executing dormant copy of a software generic. When executing this command, the local network element will support local or remote program installation into the memory of the target network element where it will reside as a dormant copy.

The **`apply`** command is used later to overwrite the currently executing generic with a copy of the generic included in the dormant software.

NOTE:
This command cannot be executed during a remote login session.

This command also supports a remote program installation to flash memory as standby copy from a PC connected to the CIT port of another DDM-2000 system.

NOTE 1:
This command must be executed from a PC with the program to be installed in its hard disk or on a set of floppy disks.

NOTE 2:
If security is enabled on any CIT or DCC port on a shelf, then this command is available to privileged users only for all CIT or DCC ports on the shelf. If security is not enabled on *all* shelves in the network, users on unsecured shelves will be able to install software into the dormant memory of shelves with security enabled.

The input parameter is:

`TID` The Target Identifier (system name) of the shelf into which the program will be loaded. TIDs are case insensitive.

If the command syntax is correct, the following message will be displayed:

```
/* Testing for program installation ... */
```

This command can only be completed successfully if it is executed from a CIT or modem port but not if it is received over the DCC. This command cannot be executed during a remote login session. If this command is executed during a remote login session, the following message will be displayed:

```
SNVS
/* Status, Not in Valid State */
/* This command cannot be executed from within a rlgn session. */
```

If this command is not executed from a PC, the following denial message will be displayed:

```
SSTP
/* Status, execution SToPped */
/* PC communication link could not be established.
   Please connect PC with program to be installed and start again. */
```

If this command is used to install a program for a certain product type while the TID of the shelf into which the program will be loaded identifies a different product type (for example, a program to be installed is for DDM-2000 OC-3 product type, while the target product type is FT-2000), the request will be denied and the following message is displayed:

```
IITA
/* Input, Invalid TArget identifier (TID) */
/* <TID> is a different product type;
   Incompatible software. */
```

If a user attempts to remotely install an NE program into a Target network element that has either an **`apply`** command in progress or **`apply`** is already scheduled, the following denial message will be displayed:

```
SSTP
/* Status, execution SToPped */
/* Apply command is either IP or scheduled
   in Target NE. */
```

If a user attempts to remotely install an NE program to a Target network element that has a cpy-prog command in progress, the following denial message will be displayed:

```
SSTP
/* Status, execution SToPped */
/* A cpy-prog command is already IP
   in Target NE. */
```

If this command is used to install a program locally to a DDM-2000 but the PC contains DLC Subsystem program, the following denial message will be displayed:

```
SSTP
/* Status, execution SToPped */
/* Incompatible program. */
```

If the communication link between the PC and the system that it connects to fails, the following denial message will be displayed:

```
SSTP
/* Status, execution SToPped */
/* PC communication link failure. */
```

To support remote program installation from a PC, the PC, the local system that the PC connects to, and the target system must be running compatible programs. To support local program installation from a PC, the PC, and the local (target) system that the PC connects to must be running compatible programs. If the programs are not compatible, the following denial message will be displayed:

```
SSTP
/* Status, execution SToPped */
/* Communication protocol failure. */
```

For remote program installation, if the target system has a communication failure, has a "P" displayed in its SYSCTL 7-segment LED display, or does not support remote program installation from a PC, the following denial message will be displayed:

```
SSTP
/* Status, execution SToPped */
/* Communication failure. */
```

If a Network Element (NE) receives this command, but is unable to determine a TID-NSAP translation for the entered TID (TID could not be found), this command will be denied and the following message displayed:

```
SNVS
/*Status, Not in Valid State */
/* Remote session cannot be established.
   TID entered is not found. */
```

If the entered TID does not match the remote NE's TID (only the NSAP matched in this case), this command will be denied and the following message displayed:

```
SNVS
/*Status, Not in Valid State */
/* Remote session cannot be established.
   Inconsistent TID.
   NSAP=<XXXXXXXXXXXXXXXXXXXXXXXXXXXXXXXXXXXXXXXX> */
```

In the above message, NSAP represents the remote NE's NSAP.

If an NE receives this command and is able to determine a TID-NSAP translation, but the NSAP is unreachable (TID is kept the same, but NSAP must have been changed), this command will be denied and the following message displayed:

```
SNVS
/*Status, Not in Valid State */
/* Remote session cannot be established.
   Association setup failure.
   NSAP=<XXXXXXXXXXXXXXXXXXXXXXXXXXXXXXXXXXXXXXXX> */
```

In the above message, NSAP represents the one found in the TID-NSAP translation.

If communication cannot be established when attempting to download software to a local site from a PC, the following message will be displayed:

```
SSTP
/* Status, execution SToPped */
/* Communication link cannot be established.
   Please connect PC with DDM-2000 upgrade
   program and start again. */
```

If a user attempts to download software that is incompatible with the shelf type (for example, DDM-2000 OC-12 software into a DDM-2000 OC-3 system), or controller type for the following denial message will be displayed:

```
SCSN
/* Status, invalid Command SequenCe */
/* Incompatible Software */
```

When this command is used to download software to a local site from a personal computer (PC), the following confirmation message will be displayed after testing for program installation:

```
/* Caution! Execution of this command will erase the current
generic n.n.n at Target Identifier and replace it with
generic m.m.m.  If this fails prior to completion,
the control system will likely become inoperable
until another install program attempt is successful.
This command will terminate any other active CIT sessions.
This command will take about 30 minutes to install the new program.
Check the Software Release Description for estimates at
9600 baud.
Lower data rates will take proportionally longer. */

Execute? (y/n or CANcel/DELete to quit) =
```

When upgrading software, the following confirmation message will be displayed after testing for program installation:

```
/* Caution! Execution of this command will overwrite the current
   dormant generic (if any) at Target Identifier. */

Execute? (y/n or CANcel/DELete to quit) =
```

When this command is used to download a new release of NE software (into the dormant memory of remote system) that is significantly different from the NE software currently running on the remote system, or to download NE software into the dormant memory of a local system from a PC where the software to be downloaded is significantly different from the NE software currently running on the local system, the following confirmation message is displayed:

```
/* Caution! Execution of this command will overwrite the current
   dormant generic (if any) at Target Identifier. */

/* Caution! Major changes exist between these two generics such
   that they may not be compatible.  Check the TOPS and software
   compatibility information for additional information or actions
   needed. */

Execute? (y/n or CANcel/DELete to quit) =
```

When a user gives a positive response to the confirmation message, the following message is displayed:

```
In progress ...............................................
```

The number of dots and how fast they are displayed depend on the size of the program to be installed, baud rate, and for remote program installation, number of DCC spans between the local and remote systems, and DCC traffic.

See "Install New Generic Program" in the TOP section of this manual for complete instructions before using this command. Use the **rtrv-ne** or **rtrv-map-network** commands to obtain the exact TID for the system. The command **rtrv-eqpt** provides the current program version. The current program version may also be obtained from the initial screen and every report header line when logged into the system with a craft interface terminal (CIT). The current program version is also available on the user panel.

Each time a carriage return is entered, the system will also print a header line containing the TID and program version.

RELATED COMMANDS

rtrv-eqpt

rtrv-ne

NAME

logout: Terminate CIT Session

INPUT FORMAT

`logout`;

DESCRIPTION

This command terminates a user CIT session.

If this command is entered during a local session, it will terminate all sessions established by the user. If entered during a remote session, this command will terminate the remote session and return the user to the local session.

RELATED COMMANDS

rlgn

toggle

NAME

opr-aco: Operate Alarm Cutoff

INPUT FORMAT

`opr-aco;`

DESCRIPTION

This command silences the audible office alarms. Alarms remain silent until a new alarm condition arises.

If this command is executed while there is an active alarm condition in the system, it will:

- Silence active audible office alarms
- Light the alarm cut-off (ACO) LED on the user panel
- Set the parallel telemetry ACO output point
- Clear all parallel telemetry outputs (Not Applicable to all TARP releases) except the system ID and ACO outputs.

This command is equivalent to pushing the ACO button on the user panel, activating the TBOS ACO control point or activating the parallel telemetry ACO input.

For any DDM-2000 Multiplexer shelf in a network that has co-located DDM-2000 shelves (same *`site`* parameter settings), any one of the following actions will silence audible office alarms on all shelves at the same site:

- Pressing the ACO button
- Executing the **`opr-aco`** command
- Setting the TBOS ACO control point

NOTE:
For all TARP releases, **only** the *`Local ACO`* parameter (obtained by either pressing the ACO button or executing **`opr-aco`** command) is allowed.

The *`TBOS ACO control points`*, *`parallel telemetry ACO`*, *`remote ACO`*, and the *`site`* parameter are not applicable.

NAME

opr-lpbk-t1: Operate-Loopback-T1

INPUT FORMAT

`opr-lpbk-t1:`*`Address`*[:**`lpbktype=`***`LoopbackType`*];

DESCRIPTION

CAUTION:
Execution of this command may affect service.

This command executes a loopback on a DS1 or T1 circuit pack towards the optical fiber (terminal) or the DSX (facility) as shown in Figure 11-2. The loopback remains in place until released by the **`rls-lpbk-t1`** command.

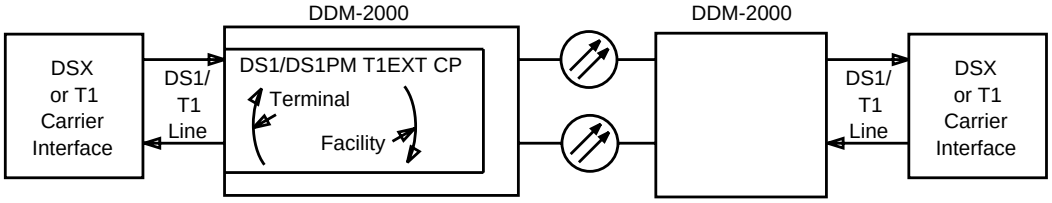

Figure 11-2. DS1 Loopback

The input parameters are:

Address Address of DS1 or T1 port(s) to be looped back.
For a terminal loopback, valid addresses in a 1x1 protected LS configuration are:
`all, {a,b,c,d}-all, {a,b,c,d}-1-{1-4,all}`

For a terminal loopback, valid addresses in a 1x7 protected LS configuration are:
`all, {a,b,c}-{1,2}-{1-4,all}, d-1-{1-4,all}`

For a facility loopback, valid addresses in a 1x1 protected LS configuration are:
`all, {a,b,c,d}-all, {a,b,c,d}-1-{all},`

For Release 3.0 and later with the BBF3B the valid 1x1 protected addresses are:
`all, {a,b,c,d}-all, {a,b,c,d}-1-{1-4,all}`

For a facility loopback, valid addresses in a 1x7 protected LS configuration are:
`all, {a,b,c}-{1,2}-{all}, d-1-all`.

For Release 3.0 and later with the BBF3B the valid 1x7 protected addresses are:
`all, {a,b,c}-{1,2}-{1-4,all}, d-1-{1-4,all}`

The BBF6 and BBF8 circuit packs support two T1 ports. When addressing ports on these packs, only ports number 1 and 2 are valid. Specifying **`all`** selects ports 1 and 2 only.

`lpbktype` Loopbacktype specifies whether the loopback is terminal or facility. The valid values for this parameter are:

terminal Terminal loopback directed towards the high-speed facility. This is a default value.

facility Facility loopback directed towards the DSX or T1 interface. For the BBF1, BBF1B, and BBF3 circuit packs, operation of the loopback causes all four incoming DS1 signals to be looped back towards the DSX or T1 interface.
In Release 3.0 and later, an individual DS1 facility loopback is supported on each DS1 interface on the BBF3B circuit pack.

If the loopback type is not consistent with the address, the following denial message is displayed:

```
SNVS
   /* Status, Not in Valid State */
   /* loopback type is not consistent with the address. */
```

If the command cannot be completed due to hardware problems on the circuit pack, the following message is displayed:

```
/* Address CPname CP failed */
```

Address and *CPname* refer to the slot address and provisioned circuit pack type for the slot, respectively.

If a slot is in AUTO state or determined to have the wrong circuit pack type for the command, the following message is displayed:

```
/* Slot is in AUTO state or Address is not equipped  - no
   loopback established */
/* Enter DS1 port Address:   */
```

If the command cannot be completed due to hardware problems on the SYSCTL, the following message is displayed:

```
/* SYSCTL failed - no loopback established */
```

If this command is invoked to establish other than an existing loopback type (that is, if a facility loopback is requested when a terminal loopback already exists or vice versa) for the same address, the following denial message will be displayed:

```
SNVS
/* Status, Not in Valid State */
/* Establishing new loopback type (facility/terminal) requires that
existing loopback type (terminal/facility) associated with this
address must be released. */
```

When input for a terminal loopback, this command will cause the following confirmation message to be displayed:

```
/* Caution! Execution of this command may affect the DS1
performance monitoring data and may affect service.
You have selected the opr-lpbk-t1 command with these parameters:

   Loopbacktype=loopbacktype
   Address=address */

Execute? (y/n or CANcel/DELete to quit) =
```

When input for a facility loopback, this command will cause the following confirmation message to be displayed:

```
/* Caution! Execution of this command may affect the DS1 and VT
performance monitoring data and may affect service.
You have selected the opr-lpbk-t1 command with these parameters:

Loopbacktype=loopbacktype
Address=address */

Execute? (y/n or CANcel/DELete to quit) =
```

RELATED COMMANDS

rls-lpbk-t1

NAME

opr-lpbk-t3: Operate-Loopback-T3

INPUT FORMAT

`opr-lpbk-t3:`*`Address`*[:**`lpbktype=`***`LoopbackType`*];

DESCRIPTION

CAUTION:
Execution of this command may affect service.

This command executes a loopback on a DS3 port towards the optical fiber (terminal) or DSX (facility), as shown in Figure 11-3.

Starting with FiberReach Release 3.1, this command is allowed if the shelf is equipped with 28-type OLIUs in Main and DS3 circuit packs in the Function unit slots. In FiberReach Release 4.0, this command is allowed also if the shelf is equipped with 29/26-type OLIUs in Main and DS3 circuit packs in the Function unit slots.

Note that terminal and facility loopbacks cannot be set at the same time. The loopback remains in place until released by the **`rls-lpbk-t3`** command.

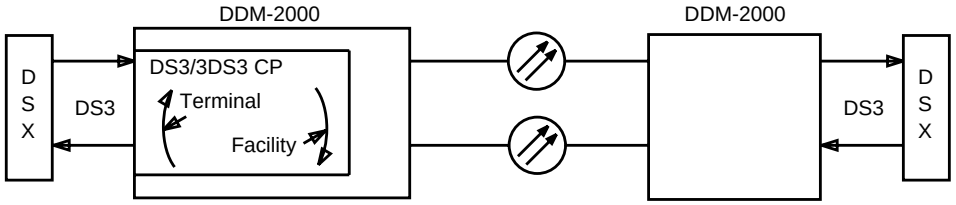

Figure 11-3. DS3 Loopback

The input parameters are:

Address Address of DS3 port(s) to be looped back.
Valid DS3 Port Addresses (BBG4/BBG4B): **{f,all}**

Valid DS3 Port Addresses (BBG19): **all, f-{1-2,all}**

lpbktype loopbacktype specifies whether the loopback is terminal or facility

terminal terminal loopback directed towards the high-speed facility. This is a default value.

facility facility loopback directed towards the DSX.

If the command cannot be completed due to hardware problems on the circuit pack, the following message is displayed:

```
/* Address CPname CP failed */
```

Address and *CPname* refer to the slot address and provisioned circuit pack type for the slot, respectively.

If a slot is in AUTO state or determined to have the wrong circuit pack type for the command, the following message is displayed:

```
/* Slot is in AUTO state or Address is not equipped  - no
   loopback established */
/* Enter DS3 port Address:   */
```

If the command cannot be completed due to hardware problems on the SYSCTL, the following message is displayed:

```
/* SYSCTL failed - no loopback established */
```

If a slot is determined to have the wrong pack type for the command, the following message will be printed on the CIT:

```
/* address is not equipped properly - no loopback established */
```

Where `address` is a slot AID.

If this command is invoked to establish other than an existing loopback type (that is, if a facility loopback is requested when a terminal loopback already exists or vice versa) for the same address, the following denial message will be displayed:

```
SNVS
   /* Status, Not in Valid State */
   /* Establishing new loopback type (facility/terminal) requires that
      existing loopback type (terminal/facility) associated with this
      address must be released. */
```

When input for terminal loopback, this command will cause the following confirmation message to be displayed:

```
/* Caution! Execution of this command may affect the DS3
   performance monitoring data and may affect service.
   You have selected the opr-lpbk-t3 command with these parameters:

   Loopbacktype=loopbacktype
   Address=address */

Execute? (y/n or CANcel/DELete to quit) =
```

When input for facility loopback, this command will cause the following confirmation message to be displayed:

```
/* Caution! Execution of this command may affect the DS3
   performance monitoring data and may affect service.
   You have selected the opr-lpbk-t3 command with these parameters:

   Loopbacktype=loopbacktype
   Address=address */

Execute? (y/n or CANcel/DELete to quit) =
```

RELATED COMMANDS

rls-lpbk-t3

NAME

reset: Reset the System Software Program

INPUT FORMAT

`reset`;

DESCRIPTION

CAUTION:
Execution of this command may affect performance-monitoring data.

This command resets the system software program. All history and performance-monitoring data is lost. All alarm information is lost and "rediscovered." The date and time are lost and "rediscovered" from the far end or set to default (**`70-01-01`** for date and **`00:00:00`** for time). No provisioning information is lost or changed, except for the page length parameter in **`set-link`**, which is reset to the default value.

An automatic date and time recovery process takes place by reading the date and time from the remote shelf connected to the interface of the local shelf (in linear applications). In ring applications, the date and time data is recovered from the remote shelf connected to the local shelf.

If the low-speed protection assembly has been changed since the last reset, this command will also attempt to change the low-speed protection mode to match the new protection assembly. The attempt will fail only if one or more cross-connects to low-speed ports are still provisioned. In this case, a `"ls prot mode not chgd-(crs)"` alarm will be raised against the low speed protection assembly. To complete the change, remove all cross-connections to low-speed ports and reexecute the **`reset`** command.

NOTE 1:
Unlike other commands, an abbreviated version of this command name may not be entered. The user must type the complete command name when entering this command or the command request will be denied.

NOTE 2:
If security is enabled on any CIT or DCC port on a shelf, then this command is available to privileged users only for all CIT or DCC ports on the shelf.

NOTE 3:
If a reset is done on any shelf, all adjacent shelves (shelves at the other ends of the optical interfaces that terminate on the shelf being reset) may show transient "section DCC channel failed" alarms. This is a normal system response.

When input, this command displays the following confirmation message:

```
/* Caution! When executed, this command causes the NE to
   restart the program.  This action will erase all of
   the performance monitoring data and the history file.
   If possible, it will reinitialize the date and time with
   the far end system.
   You have selected the reset command. */

Execute? (y/n or CANcel/DELete to quit) =
```

During system start-up after reset or other initialization, the user who is connected to a CIT port cannot log in. When the user presses RETURN, the following message is issued:

```
/*  System Initialization is in progress.
    Try to log in again later. */
```

NAME

rlgn: Remote Login

INPUT FORMAT

rlgn:*TID;*

DESCRIPTION

This command establishes a remote login session via the SONET data communications channel (DCC). Any network element (NE) which is part of the same maintenance subnetwork and has a compatible product type may be accessed with this command.

The alarm and status report for the far end system is printed automatically when this command is executed.

Starting with FiberReach Release 4.0, if upon loging in a user's password expires, this command will be accepted but the user will not be able to perform any function until the associated password has successfully been changed through the **set-passwd** command. The only commands allowed in this case are **set-passwd** and **logout**.

A special error message will be displayed (after the Lucent banner) as part of the command completion response informing the user that the password has expired and must be updated. The banner will be displayed immediately after the Lucent proprietary banner.

The input parameter is:

TID TID is the target identifier (system name) of the desired remote shelf.

If the command is successfully completed and security is enabled the user will be prompted for login and password (similar to a local login session).

NOTE:
A remote login session may be terminated unexpectedly if a user elsewhere in the network enables or disables the DCC.

Starting with FiberReach Release 4.0, if the login request completes successfully, and the (customer provisioned) proprietary banner feature is enabled, both Lucent and customer proprietary messages are displayed after login and password verification.

If the customer propietary banner is disabled, only Lucent proprietary banner is displayed after login and password verification.

If a user attempts to login to a remote shelf where another remote session is already established, the following denial message will be displayed:

```
RNBY
/* Resource, Ne is BusY */
/* A remote session is not allowed.
   Try again later. */
```

If a user is logged into a shelf and then tries to remotely login to the same shelf, the following denial message will be displayed:

```
SNVS
/* Status, Not in Valid State */
/* Local session already established.
   A remoted login to this TID is not allowed. */
```

If a user has toggled back to the local NE after establishing a remote session and tries to return to the remote session using this command, the following denial message will be displayed:

```
SNVS
/* Status, Not in Valid State */
/* Remote session already established.
   A second remote session is not allowed. */
```

If the user attempts to log into a system whose product type does not support remote logins from the local NE, the following denial message will be displayed:

```
SNVS
/* Status, Not in Valid State */
/* Remote session cannot be established.
   A remoted login to this product type is not allowed. */
```

If a nonprivileged user remotely logs into a remote NE through a DCC in **`lockout`** state, the following denial message will be displayed:

```
PIPW
/* Privilege, Illegal PassWord */
/* Access Blocked. */
```

If an unknown TID (or TID could not be found) is entered, the following message will be displayed and the user will be reprompted for the TID:

```
/* TID entered is not found. */
```

If an unknown TID (NE is unable to determine TID-NSAP translation for the entered TID and TID could not be found) is entered, this command will be denied and the following message displayed:

```
SNVS
/* Status, Not in Valid State */
/* Remote session cannot be established.
   TID entered is not found. */
```

If the entered TID does not match the remote NE's TID, (only the NSAP matched in this case), this command will be denied and the following message displayed:

```
SNVS
/* Status, Not in Valid State */
/* Remote session cannot be established.
   Inconsistent TID.
   NSAP=<XXXXXXXXXXXXXXXXXXXXXXXXXXXXXXXXXXXXXXXX> */
```

In the above message, NSAP represents the remote NE's NSAP.

If an NE receives this command and is able to determine a TID-NSAP translation, but the NSAP is unreachable (TID is kept the same, but NSAP must have been changed) or for any other reason, the remote NE is simply not reachable, this command will be denied and the following message displayed:

```
SNVS
/* Status, Not in Valid State */
/* Remote session cannot be established.
   Association setup failure.
   NSAP=<XXXXXXXXXXXXXXXXXXXXXXXXXXXXXXXXXXXXXXXX> */
```

In the above message, NSAP represents the one found in the TID-NSAP translation. Starting with FiberReach Release 4.0, if the login request does not complete successfully because the user's password has expired, the following error response will be displayed immediately after the Lucent banner (before the alarm and staus report):

```
/* Your passowrd has expired.  Until you change
   your password, you will not be allowed further
   access to this NE.  */
```

RELATED COMMANDS

logout

toggle

rtrv-map-neighbor

rtrv-map-network

NAME

rls-lpbk-t1: Release-Loopback-T1

INPUT FORMAT

`rls-lpbk-t1:`*`Address`*[:**`lpbktype=`***`LoopbackType`*];

DESCRIPTION

This command releases a previously established loopback on a DS1 or T1 port. When using the IMA LAN interfaces, the only allowed loopback type is terminal.

The input parameters are:

`Address` Address of DS1 or T1 port(s) where a loopback is to be released. For a terminal loopback, valid addresses in a 1X1 protected LS configuration are:
`all, {a,b,c,d}-all, {a,b,c,d}-1-{1-4,all}`

For a facility loopback, valid addresses in a 1X1 protected LS configuration are:
`all, {a,b,c,d}-all, {a,b,c,d}-1-{all}`

For a facility loopback on the BBF3B circuit pack in Release 3.0 and later, valid addresses in a 1X1 protected LS configuration are:
`all, {a,b,c,d}-all, {a,b,c,d}-1-{1-4,all}`

For a terminal loopback, valid addresses in a 1x7 protected LS configuration are:
`all, {a,b,c}-{1,2}-{1-4,all}, d-1-{1-4,all}`

For a facility loopback, valid addresses in a 1x7 protected LS configuration are:
`all, {a,b,c}-{1,2}-{all}, d-1-all`

For a facility loopback on the BBF3B circuit pack in Release 3.0 and later, valid addresses in a 1X7 protected LS configuration are:
`all, {a,b,c}-{1,2}-{1-4,all}, d-1-{1-4,all}`

The BBF6 circuit pack supports two T1 ports. When addressing ports on a BBF6, only ports number 1 and 2 are valid. Specifying **`all`** selects ports 1 and 2 only.

`lpbktype` Loopbacktype specifies whether the loopback is terminal or facility. Since only one type of loopback is allowed at a time on DS1 or T1EXT circuit packs, this parameter is not used for these circuit packs.

`terminal` terminal loopback is directed towards the high speed facility. This is the default value.

Terminal is the only loopback type allowed when using the IMA LAN interfaces.

`facility` facility loopback is directed towards the DSX.

If the command is issued with an incorrect address for the specified loopback, the following denial message is displayed:

```
SNVS
   /* Status, Not in Valid State */
   /* loopback type is not consistent with the address. */
```

NOTE:
If the address **`all`** is used, the command will be denied of the loopback type is inconsistent with any existing loopback.

RELATED COMMANDS

opr-lpbk-t1

NAME

rls-lpbk-t3: Release-Loopback-T3

INPUT FORMAT

`rls-lpbk-t3:`*`Address`*[:**`lpbktype=`***`LoopbackType`*];

DESCRIPTION

This command releases a loopback on a DS3 port previously established by an **`opr-lpbk-t3`** command.

Starting with FiberReach Release 3.1, this command is allowed if the shelf is equipped with 28-type OLIUs in Main and DS3 circuit packs in the Function unit slots.

In FiberReach Release 4.0, this command is allowed also if the shelf is equipped with 26/29-type OLIUs in Main and DS3 circuit packs in the Function unit slots.

The input parameter is:

`Address` Address of DS3 port(s) where a loopback is to be released.
Valid DS3 Port Addresses (BBG4/BBG4B): **`{f,all}`**

Valid DS3 Port Addresses (BBG19): **`all, f-{1-2,all}`**

`lpbktype` Loopbacktype specifies whether the loopback is terminal or facility. For BBG4/BBG4B/BBG19 circuit packs, only one type of loopback at a time is allowed on a given address. Valid values are:

- *`terminal`* terminal loopback is directed towards the high speed facility. This is the default value.
- *`facility`* facility loopback is directed towards the DSX-3.

RELATED COMMANDS

opr-lpbk-t3

NAME

rstr-passwd: Restore Logins, Passwords, and User Types

INPUT FORMAT

`rstr-passwd`:*`login`*,*`passwd`*,*`user_type`*,*`clr`*;

DESCRIPTION

NOTE:
This command is available to privileged users only.

This command is *only* used to restore the login, password (in encrypted and encoded form), and user type information from an external workstation into the network element (NE). The restored information is information that would have been previously loaded from the NE into the external workstation through the **`rtrv-passwd`** command.

This command is intended to be used *only* in expert mode by an external personal computer or workstation and not at a CIT.

The input parameters are:

`login` This is the login name that was established by the security administrator on the NE before the **`rtrv-passwd`** command was executed.

`passwd` This is the current encrypted and encoded password selected by the owner of the login before the **`rtrv-passwd`** command was executed.

`user_type` This is the user access class assigned to this login by the security administrator before the **`rtrv-passwd`** command was executed. This parameter may have one of the following values:

`privileged`
The privileged user may execute any commands including restricted commands.

`general` The general user may execute any commands that are not restricted to privileged users.

`maintenance`
The maintenance user may only execute commands that access the system, extract reports, and execute maintenance functions through a specific set of commands. No privileged commands are allowed to be executed by maintenance users.

`reports-only`
The reports-only user may only execute basic commands that extract reports from the system.

clr This parameter indicates whether the login data existing on the NE should be deleted before the login, password, and user type information can be restored. This parameter may have one of the following values:

- `clear` Clear the NE login file before restoring the login information (used only when *user_type* is privileged).
- `noclear` Append the restored login information to the network element login file.

If this command is executed with the parameter *clr* set to `clear`, all login information in the NE login file will be cleared. Then the new login information is restored from the external workstation. However, all active login sessions will not be terminated.

Attempts to input invalid parameter(s) data will result in the user being denied execution of this command. The following denial message is displayed:

```
IDNV
/* Input Data Not Valid, invalid data entered. */
```

An invalid parameter indicates that either a login does not match the valid login definition, the length of the encrypted password (after decoding it into encrypted form) is invalid, a *user_type* is invalid (for example, a misspelled *user_type*), or a *clr* value is invalid (that is, other than clear or noclear).

If this command attempts to restore another login line when the NE's maximum number of supported logins is reached, the following denial message will appear:

```
SLEM
/* Status, List, Exceeds Maximum */
/* Maximum number of logins already exists.
   Cannot enter another login. */
```

If the user attempts to restore another **`privileged`** user when the maximum number of **`privileged`** users has already been reached, this attempt will be denied and the following message will be displayed:

```
SLOM
/* Status, List, Over Maximum allowed */
/*  Maximum number of privileged users already exists. */
```

If an attempt is made to restore an already existing **`privileged`** user's login/password information with a *`user_type`* of either **`general`**, **`maintenance`**, or **`reports-only`**, this attempt is denied and the following message is displayed:

```
SDNC
/* Status, Data Not Consistent */
/* Privileged user logins cannot be restored as
   General, maintenance or Reports-only. */
```

If an attempt is made to restore a user's login/password information, with a *`user_type`* of either **`general, maintenance`** or **`reports-only`** and *`clr`*=**`clear`**, the attempt will be denied and the following message is displayed:

```
SDNC
/* Status, Data Not Consistent */
/* for clr=clear, user_type must be set to privileged. */
```

RELATED COMMANDS

rtrv-passwd

set-lgn

set-passwd

NAME

rtrv-alm: Retrieve Alarm and Status

INPUT FORMAT

`rtrv-alm[:alm=`*`AlarmLevel`*`]`;

DESCRIPTION

This command displays a report of active alarm and status conditions at the local network element. The report includes the source address of the alarm as well as date and time of the alarm, whether or not the condition is service-affecting, and a short description of the condition.

The input parameter is:

`alm` AlarmLevel for which a report is desired. This parameter may have one of the following values:

`all (default)`

`cr`

`mj`

`mn`

`pmn`

`other (abnormal, ne-acty, status conditions)`

Alarms are listed from greatest to least severity. Within a severity level, newer alarms are listed first.

NOTE:
Due to the large number of conditions reported, the RTRV-ALM report pages have been located at the end of this section for easier reference. Please refer to the RTRV-ALM table (Table 11-3) for a complete description of report outputs.

RELATED COMMANDS

rtrv-hsty

NAME

rtrv-attr-alm: Retrieve Attribute Alarm

INPUT FORMAT

`rtrv-attr-alm;`

DESCRIPTION

This command displays current alarm attributes, as provisioned by the **`set-attr-alm`** command.

The output report appears as follows:

```
/* System Alarm Attributes Report
=====================================================================
Alarm Delay (almdel)=almdel, Clear Delay (clrdel)=clrdel, PMN=pmn
*/
```

The output parameters are:

`Alarm Delay`	This shows the alarm holdoff delay in seconds for incoming signal and equipment failures. This parameter is an integer with a range of 0 through 30.
`Clear Delay`	This shows the alarm clear delay in seconds for equipment failures. This parameter is an integer with a range of 0 through 30.
`PMN`	PMN is the office alarm level to be raised during a power minor alarm condition. This parameter has the values MJ (major) or MN (minor) indicating the alarm level.

NOTE:
Incoming signal failure conditions, AIS, and FERF signals are subject to the provisionable alarm holdoff delay and a fixed 15-second clear delay. Yellow signals are not subject to holdoff or clear delays. Circuit pack failures (except control circuit pack failures) are subject to the provisionable alarm holdoff and clear delays.

RELATED COMMANDS

set-attr-alm

NAME

rtrv-attr-cont: Retrieve Attribute Control

INPUT FORMAT

rtrv-attr-cont[:*Address*];

DESCRIPTION

This command displays the provisioned name of miscellaneous discrete environmental control points, as set by the **set-attr-cont** command.

The input parameter is:

Address Address of the environmental control point. The default address is **cont-all**.
Valid Addresses: **cont-{1-4,all}**

The output report appears as follows:

```
/* Control Point Provisioning Report
============================================================
Address  Description
============================================================
cont-1   StartGenerator
cont-2   StartPump
cont-3   control3
cont-4   control4
*/
```

The output parameters are:

`Address` This is the address of the control point.

`Description` This is the provisioned description of the environmental control point.

NOTE:
This command will be denied if it is entered in a system whose SYSCTL CO/RT parameter is set to CO (via the **`set-ne`** command). Use the **`rtrv-ne`** command to determine the switch setting. The following denial message will be displayed:

```
ENRI
/* Equipage, Not equipped for Retrieving specified Information */
/* Environmental controls can be provisioned only in RT systems. */
```

RELATED COMMANDS

rtrv-attr-env

rtrv-ne

set-attr-cont

set-attr-env

NAME

rtrv-attr-env: Retrieve Attribute Environment

INPUT FORMAT

rtrv-attr-env[:*Address*];

DESCRIPTION

This command displays the provisioned alarm and provisioned name and provisioned alarm type of miscellaneous discrete environmental alarm/status points, as set by the **set-attr-env** command.

The input parameter is:

Address The address of the environmental input point.
Valid Addresses: **env-{1-15,all}**, **env-{all}** (default)

The output report appears as follows:

```
/* Environmental Alarm Provisioning Report
============================================================
Address  Alarm  Alarm Type      Description
============================================================
env-1     CR    MISC            Fire
env-2     NA    Power           OpenDoor
env-3     MN    code-7          environment3
 .        .       .              .   .   .
 .        .       .              .   .   .
 .        .       .              .   .   .
 .        .       .              .   .   .
 .        .       .              .   .   .
env-15    MN    Misc            externalMinor
*/
```

The output parameters are:

Address The address of the environmental alarm/status point.

`Alarm` Alarm is the provisioned alarm level of the environmental input and has the following values:

- `CR` Critical alarm
- `MJ` Major alarm
- `MN` Minor alarm
- `NA` Not alarmed, but reported

`Alarm Type` This is the user-defined classification of the environmental alarm/status point.

`Description` Provisioned description of the environmental alarm/status point.

NOTE:
This command will be denied if it is entered in a system whose SYSCTL CO/RT parameter is set to CO (via the **`set-ne`** command). Use the **`rtrv-ne`** command to determine the switch setting. The following denial message will be displayed:

```
ENRI
/* Equipage, Not equipped for Retrieving specified Information */
/* Environmental alarms can be provisioned only in RT systems. */
```

RELATED COMMANDS

rtrv-attr-cont

rtrv-ne

set-attr-cont

set-attr-env

NAME

rtrv-crs-sts1: Retrieve Cross-Connection STS-1

INPUT FORMAT

`rtrv-crs-sts1`[:*Address*];

DESCRIPTION

This command retrieves STS-1 cross-connections within the DDM-2000 system.

NOTE:
This command is available with FiberReach 3.1 and later releases.

This report also indicates if any VT1.5 cross-connections exist. A VT1.5 cross-connection map report, obtained by using the **`rtrv-crs-vt1`** command, will show the specific VT1.5 cross-connections.

The input parameter is:

Address The address of one or more STS-1 channels for which cross-connections are to be reported. The default address is **`all`** STS-1 channels in the system.
If the shelf is equipped with 28-type OLIUs in the Main units (in FiberReach 3.1 and later), the valid addresses are: **`m-{1-3,all}`**

However for the equipage of DS3 circuit packs in the Function unit slots (FiberReach Release 3.1 and later), the valid Function unit address is: **`f`**.

If the shelf is equipped with 29-type (starting with FiberReach Release 4.0) OLIUs in its Main units, the valid addresses are: **`m-{1-12,all}`**,

The output report appears on the following page.

```
/* Cross-Connection Map Report
==================================================================
Address  Address                Cross Connect  Ring Id
   1        2                       Type
==================================================================
-----------------------------STS-3C-------------------------------
m-10     m-10                      twoway         -

-----------------------------STS-1--------------------------------
m-1      f                         twoway         -
m-3      VT1.5 Cross-Connection
*/
```

NOTE:
Starting with FiberReach Release 3.0 each cross-connection is reported only once (not once in each direction).

The above report lists both STS-1 and STS-3c cross connections (if applicable) in separate sections. The output report shows the channels in an order that reflects the physical layout of the system (for example, the high-speed slots are shown first, followed by those associated with the function unit).

Also the STS-3c section within the FiberReach report is applicable if the main unit slots are equipped with OC-12 interfaces (29G-U OLIU circuit packs).

The output parameters are:

`Address 1` Address 1 is the address of an STS-1 channel.

`Address 2` Address 2 is the address of an STS-1 channel.

`Cross Connect Type`
This parameter is available with all ring releases.

This column specifies whether the cross-connection is two-way (**`twoway`**) - Two-way cross-connections apply to terminating, hub, add/drop, pass-through configurations. For detailed information on the mentioned cross-connection types, refer to **`ent-crs-sts1`** command page.

RELATED COMMANDS

dlt-crs-sts1

ent-crs-sts1

NAME

rtrv-crs-sts3c: Retrieve Cross-Connection STS-3c

INPUT FORMAT

`rtrv-crs-sts3c[`:*`Address`***`]`**;

DESCRIPTION

This command retrieves STS-3c cross-connections within the DDM-2000 system. Cross-connections are entered using the **`ent-crs-sts3c`** command.

This command is available in FiberReach starting with Release 3.1. This command can be used only if the shelf is equipped with 28 or 29-type OLIU circuit packs in its Main unit slots, and 22-type OLIU circuit packs in its Function unit slots.

If the Main Unit slots are equipped with 28-type OLIU circuit packs, the ONLY valid cross-connect type is **`twoway`** (add-drop).

If the Main Unit slots are equipped with 29-type OLIU circuit packs (available in Release 4.0 and later), the only valid cross-connect type is **`twoway`** (add-drop and pass-through).

NOTE:
If Slots 1 and 2 are equipped with different pack types (for example, during an upgrade), this report will include data for what is considered at the time as the valid system pack type.

The input parameter is:

`Address` The address of one or more STS-3c channels for which cross-connections are to be reported. The default address is **`all`** STS-3c channels in the system.

If the FiberReach shelf is equipped with 28-type OLIU circuit packs in its Main unit slots, and 22-type OLIU circuit packs in its Function unit slots, the valid STS-3c Addresses are: **`m-{1,all}, f-1`**

If the OC-3 shelf is equipped with 29-type OLIU circuit packs in its Main unit slots, and 22-type OLIU circuit packs in its Function unit slots, the valid STS-3c Addresses are: **`m-{1,4,7,10,all}, f-1`**.

The output report appears as follows:

```
   /* Cross-Connection Map Report
   ================================================================
   Address  Address                Cross Connect  Ring for
      1        2                       Type       Drop&Cont
   ================================================================
   -------------------------------STS-3C---------------------------
    m-1     f-1                        twoway         -
    m-7     m-7                        twoway         -
   -------------------------------STS-1----------------------------
*/
```

The output report shows the STS-3c channels in an order that reflects the physical layout of the system (for example, the high-speed slots are shown first, followed by those associated with the function unit). The output report also shows the STS-1 channels (if applicable) in a separate section. The STS-1 channels are listed in the same order as described for the STS-3c channels.

The output parameters are:

`Address 1` Address 1 is the address of an STS-3c channel.

`Address 2` Address 2 is the address of an STS-3c channel.

`Cross Connect Type`
This column specifies whether the cross-connection is two-way (**`twoway`**)

RELATED COMMANDS

ent-crs-sts3c

dlt-crs-sts3c

NAME

rtrv-crs-vt1: Retrieve Cross-Connection VT1.5

INPUT FORMAT

`rtrv-crs-vt1`[:*`Address`*];

DESCRIPTION

NOTE:
If slots 1 and 2 are equipped with different pack types (for example, during an upgrade), the output report for this command will include data for what is considered at the time as the valid system pack type.

This command retrieves VT1.5 signal cross-connections within a DDM-2000 FiberReach system, as set by the **`ent-crs-vt1`** command.

The input parameter is:

`Address` Following is the list of valid addresses:

If the shelf is equipped with 26-type OLIUs in Main unit slots, valid addresses are:
`m-1-{1-7,all}-{1-4,all}, m-1-all`

If the shelf is equipped with 28-type OLIUs in Main units (in FiberReach 3.1 and later) valid addresses are:
`m-{1-3,all}-{1-7,all}-{1-4,all}`

If the shelf is equipped with 29-type (starting with FiberReach Release 4.0) OLIUs in its Main units, valid VT1.5 Addresses are:
`m-{1-12,all}-{1-7,all}-{1-4,all}`

Valid port addresses in 1X1 protected low-speed configurations:
`{a,b,c,d}-1-{1-4,all}`

Valid port addresses in 1x7 protected low-speed configurations:
`{a,b,c}-{1,2}-{1-4,all},`
`d-1-{1-4,all}`

The T1EXT (BBF6) circuit pack supports 2 T1 ports. When addressing ports on a BBF6, only port numbers 1 and 2 are valid. Specifying `all` selects ports 1 and 2 only.

The output report appears as follows. Only existing ports or channels that are cross-connected will be displayed in the report.

```
/* VT1 Cross Connect Report
================================================================
Address     Address    Cross Connect   Ring Id
   1           2           Type
================================================================
m-1-1-2     m-1-1-2      twoway          -
m-1-5-4     c-1-4        twoway          -
m-1-7-4     d-1-4        locked          m1
  .           .          .               .
  .           .          .               .
*/
```

NOTE:
Starting with FiberReach Release 3.0 each cross-connection is reported only once (not once in each direction).

The output parameters are:

`Address 1` Address1 is the address of a VT1.5 channel or a DS1 or T1 port.

`Address 2` Address2 is the address of a VT1.5 channel or a DS1 or T1 port.

`Cross Connect Type`
This parameter specifies the cross connection type. It also specifies whether the cross-connection is two-way, or locked. Two-way applies to add/drop and pass-through configurations.

`Ring Id` This column identifies the ring for locked connections.

The report shows the current state of VT1.5 cross-connections in the NE. When the address of multiple VT1.5 channels, DS1 ports, or T1 ports are specified in the execution of this command, the report will show the addresses in the first column in numerical order reflecting the physical layout of the shelf.

The report will also indicate if any STS-1 cross-connections exist. An STS-1 cross-connection map report, obtained by using the **`rtrv-crs-sts1`** command, shows the specific STS-1 cross-connections.

RELATED COMMANDS

dlt-crs-vt1

ent-crs-vt1

rtrv-crs-sts1

rtrv-state-path

NAME

rtrv-eqpt: Retrieve Equipment

INPUT FORMAT

`rtrv-eqpt`[:*`Address`*];

DESCRIPTION

This command displays the circuit pack type and version information for one or more slots on a network element (NE). It also shows which low-speed protection mode (1x1 or 1x7) is active for the shelf.

The input parameter is:

`Address` Address identifies one or more slot(s). The default is **`all`** slots. Valid Slot Addresses: **`all, main-{1,2,all}, ls-all, ls-{a,b,c,d}-{1,2,all}, sysctl, auxctl, fn-{1,2,all}`**

A sample output report appears on the following page.

```
/* Equipage and Version Report
=====================================================================
   Slot     Circuit  Apparatus  Series     CLEI      ECI     Serial
   Address   Pack       Code    Number     Code      Code    Number
   ====================================================================
   main-1   OLIU     26G-U      S1:1    SNTRFBXDAA  200320  94MV11057853
   main-2   OLIU     26G-U      S1:1    SNTRFBXDAA  200320  94MV11057867
   --------------------------------------------------------------------
   fn-1     -        -          -       -           -       -
   fn-2     -        -          -       -           -       -
   --------------------------------------------------------------------
   ls-a-1   DS1      BBF1B      S3:4    SNCLAA1AAB  682891  92MV09578358
   ls-a-2   DS1      BBF1B      S3:4    SNCLAA1AAB  682891  92MV07648136
   ls-b-1   DS1      22mc       22Iss   22CLEI      22CECI  22Ser
   ls-b-2   DS1      22mc       22Iss   22CLEI      22CECI  22Ser
   ls-c-1   -        -          -       -           -       -
   ls-c-2   -        -          -       -           -       -
   ls-d-1   -        -          -       -           -       -
   ls-d-2   -        -          -       -           -       -
            Low speed protection mode: 1x7
   --------------------------------------------------------------------
   sysctl   SYSCTL   bbg8       S1:1    SNC11WOAAA  205700  94MV00000075
   --------------------------------------------------------------------
   auxctl   USPNL

            Program version X.X.X
   */
```

The output parameters are:

`Address`	This is the address of the slot.
`Circuit Pack`	Circuit pack is the mnemonic name that identifies the general type function provided by a circuit pack. For example, Optical Line Interface Units are all named OLIU; SYStem ConTroLlers are named SYSCTL.
`Apparatus Code`	Apparatus code uniquely identifies the specific function provided by a circuit pack. Circuit packs with different apparatus codes are not interchangeable even if they have the same name.
`Series Number`	This is used to indicate interchangeability among circuit packs with the same circuit pack name and apparatus code but different manufacturing versions. In general, a circuit pack can be replaced by another circuit pack that has the same apparatus code and the same or later series number.

`CLEI Code` *CLEI** code is the 10-character code identifying each circuit pack.

`ECI Code` Equipment catalog item (ECI) code is a 6-character code identifying each circuit pack. This code corresponds to the bar-coded label on the faceplate of the circuit pack, and is uniquely equivalent to the *CLEI* code.

`Serial Number` This is a 12-character code uniquely identifying each circuit pack and indicating the date and place of manufacture.

`Program Version` Program version is the version of software that is currently stored on the circuit pack.

`PID` Program identification code identifies the version of firmware on one or more socketed devices on the circuit pack.

`Low speed protection mode`
This identifies which low-speed protection mode is active. Possible values are 1x1 and 1x7. If the installed low-speed protection assembly does not match this mode or is missing, the report will also identify the error condition.

The report always contains a line for every slot included in the range of the address whether or not the slot is equipped.

Hyphens (-) indicate information in that field is not applicable (that is, type and version information for slots that are not equipped).

Question marks (?) indicate that the information is unknown (for example, an unrecognized circuit pack, because the system is unable to read version information from a circuit pack inserted into a slot in the AUTO state)

If an incorrect circuit pack is inserted in a slot, the report will show the expected circuit pack name for that slot and indicate that the current circuit pack does not match inventory.

If an unpowered circuit pack is placed in a slot, the report will indicate that the circuit pack is unpowered and version information is unavailable.

If the system cannot report complete and correct version information for a circuit pack because of a field upgrade, then the information that may be incorrect (apparatus code, series, *CLEI* code, and ECI code) is followed by a "?".

---

* COMMON LANGUAGE is a registered trademark and CLEI, CLLI, CLCI, and CLFI are trademarks of Bell Communications Research, Inc.

RELATED COMMANDS

rtrv-state

NAME

rtrv-feat: Retrieve Feature

INPUT FORMAT

`rtrv-feat`;

DESCRIPTION

This command retrieves a list of active feature options enabled by the **`set-feat`** command.

The output report appears as follows:

```
/* Feature Options Enabled Report
=================================================================
 Feature Option     Description
=================================================================
     feature        description
     feature        description
      .                 .
      .                 .
      .                 .
      .                 .
*/
```

The output parameters are:

`Feature Option`	This is the name of the feature currently enabled.
`Description`	Description of the feature.

RELATED COMMANDS

set-feat

NAME

rtrv-fecom: Retrieve Far-end Communications

INPUT FORMAT

`rtrv-fecom:[`*`Address`*];

DESCRIPTION

This command displays the provisioned state of a network element's (NE's) section data communication channels (DCC), as set by the **`set-fecom`** command.

The DCC is an embedded overhead communications channel in the SONET line used for end-to-end communications and maintenance. The DCC carries alarm, control, and status information between NEs.

The input parameter is:

`Address` Address is the address of the DCC. The default value is **`dcc-all`**.

Valid Addresses: **`dcc-{m1,m2,all}`**

For FiberReach Release 4.0 and later **`dcc-m`** is a valid address when the OC-3 or OC-12 main interface is set to the **`identical`** dcc mode.

The far-end communication output report appears as follows:

```
/* Far End Communication Configuration Report
================================================================
   DCC          Communications   DCC
 Address                        NS/US
================================================================
 dcc-m1            enabled       us
 dcc-m2            disabled      ns

*/
```

The output parameters for this report are:

`DCC Address`	This column displays the address of a DCC.
`Communication`	This column shows whether communication over the DCC is enabled or disabled.
`DCC NS/US`	DCC network side/user side (NS/US) parameter settings are available with the BBG8 controller to identify the setting of each end of the DCC in the network element. This identification is needed for OSI communications and is required for all nodes in the subnetwork. To avoid alarms, only one end of a span may be designated as the user side and only one end of a span may be designated as the network side.

RELATED COMMANDS

rtrv-map-neighbor

rtrv-map-network

set-fecom

NAME

rtrv-hsty: Retrieve History

INPUT FORMAT

`rtrv-hsty`;

DESCRIPTION

This command displays an event-history report. This report contains a list of the most recent system events. This report will contain up to 500 events. The events are listed in last-in, first-out order, and are date- and time-stamped.

NOTE:
Due to the large number of conditions reported, the RTRV-HSTY report pages have been located at the end of this section for easier reference. Please refer to the RTRV-HSTY table (Table 11-4) for a complete description of report outputs.

RELATED COMMANDS

rtrv-alm

NAME

rtrv-lgn: Retrieve Login

INPUT FORMAT

`rtrv-lgn`;

DESCRIPTION

This command retrieves login authorization information. This report lists each user's login and privileges. The report does not contain passwords.

NOTE:
This command is available to privileged users only.

For FiberReach Release 3.1 and earlier, the output report appears as follows:

```
/* Login Provisioning Report
=================================================================
  Login          User Type
=================================================================
  name           privileged
  name           privileged
  name           privileged
-----------------------------------------------------------------
  name           general
   .                 .
   .                 .
-----------------------------------------------------------------
  name           maintenance
   .                 .
   .                 .
-----------------------------------------------------------------
  name           reports-only
   .                 .
   .                 .
*/
```

Starting with FiberReach Release 4.0, the output report appears as follows:

```
/* Login Provisioning Report
=================================================================
  Login          User Type           Password Age
=================================================================
  name           privileged          passwd_age
  name           privileged          passwd_age
  name           privileged          passwd_age
-----------------------------------------------------------------
  name           general             passwd_age
   .                 .                    .
   .                 .                    .
-----------------------------------------------------------------
  name           maintenance         passwd_age
   .                 .                    .
   .                 .                    .
-----------------------------------------------------------------
  name           reports-only        passwd_age
   .                 .                    .
   .                 .                    .
*/
```

The output parameters are:

`Login` This column lists the login names.

`User Type` This column indicates the type of authorization each user is assigned. The valid values are **`privileged`**, **`general`**, **`maintenance`**, and **`reports-only`**.

`Passwd Age` Passwd Age. Starting with FiberReach Release 4.0, this parameter specifies the period in days after which the user has to change his/her password. This parameter can have a value between **`7`** and **`999`**, or **`0`**. A **`0`** value indicates that the password aging feature is disabled (default).

Privileged logins are listed first in the report, followed by general logins, maintenance logins, and then reports-only logins. Each category of logins is separated by a row of hyphens.

NOTE:
There are always three (and only three) privileged logins on the DDM-2000 system.

RELATED COMMANDS

set-lgn

set-secu

rtrv-secu

NAME

rtrv-link: Retrieve CIT Link Configuration

INPUT FORMAT

`rtrv-link;`

DESCRIPTION

This command displays the currently-provisioned parameters for the user's craft interface link, as set by the **`set-link`** command. This includes the link which the user is logged into, the baud rate, and the page length of reports.

The baud rate is set by autobaud and is not a provisionable parameter.

The output report appears as follows:

```
/* Interface Link Configuration Report
============================================================
Link=link, PageLength (pg)=pg, Baud=baud (auto)
*/
```

The output parameters are:

`Link` Link identifies the CIT link from which the command was executed and may have the following values:

- `cit-1` This indicates the front-access port.
- `dcc-`*x* A SONET DCC port used for remote access (**`dcc-m`**).

`PageLength` This is the number of lines displayed in one page of a report. Reports with a number of lines greater than one page will be paged.

`Baud`	Baud identifies the data rate for this link. The CIT data rate is automatically set to agree with the terminal or workstation connected to the link. The (`auto`) after the data rate indicates that the data rate is set by the autobaud routine on the SYSCTL circuit pack. After connecting to the CIT port, press <enter><enter> or <CR><CR> (double carriage return) or "AA" or "aa" to allow the system to automatically set its baud rate to the rate of the terminal or workstation attached to the port.

RELATED COMMANDS

set-link

rtrv-ne

NAME

rtrv-map-neighbor: Retrieve Neighbor Map

INPUT FORMAT

`rtrv-map-neighbor`;

DESCRIPTION

NOTE:
This command page describes the functionality of the **`rtrv-map-neighbor`** command in FiberReach Release 3.0 and later FiberReach TARP releases.

This command displays the immediate DCC neighbors that are reachable by the local Network Element (NE).

The TIDs included in this report are always determined by real-time TARP NSAP-to-TID queries, even if TARP Data Cache is enabled.

NOTE 1:
Network Elements provisioned as neighbors through TARP Manual Adjacency are not listed as neighbors in this report. This information can be obtained through the **`rtrv-ulsdcc`** report.

NOTE 2:
Adjacent NEs provisioned as Level 1 ISs across multiple Level 1 areas will not be listed as neighbors in this report.

For more explanation on the Level 1 and Level 2 routing and the IS/ES terminology, refer to 824-102-144, *Lucent Technologies 2000 Product Family Operations Interworking Guide for TARP Releases*.

The following is an example report under normal conditions and it is applicable to FiberReach Release 3.0 and later:

```
/* Neighbor Map for local_system
=====================================================================
TID                    Connected Thru    Product Type        Level 2 IS
 NSAP
=====================================================================
local_system                             FiberReach
 39 840F 80 000000 0000 0000 0000 08006alad06e 00
Site3NE1               main-1
 39 840F 80 000000 0000 0000 0000 00000e3a0273 00
Site7NE1               main-2
 39 840F 80 000000 0000 0000 0000 08006alad07f 00
*/
```

Note that the NSAP value is part of the same line as the other reported information, but it is wrapped around based on an 80-column screen width.

NOTE 1:
If Multiple Area Addresses have been provisioned at any other NE in the local NE's area, and a TARP NSAP-to-TID translation for a remote NE is successfully completed, this report will only list the information corresponding to the primary NSAP of the remote NE. A remote NE's primary NSAP is the NSAP for which the remote NE responds successfully to an NSAP-to-TID TARP query.

NOTE 2:
In the event Multiple Area Addresses are used for an NE in the local NE's area, and none of the TARP NSAP-to-TID queries were successful, this report will list each of the possible NSAPs (each NSAP corresponding to one of the multiple Area Addresses) for the remote NE, along with a "?" displayed in the TID column.

The local NE is listed first in the report. The rest of the entries are sorted by channel number or `Connected Through` Address.

The output report contains two lines for each neighbor system with which the local NE is communicating via SONET section DCC

Starting with FiberReach Release 3.1, a new output parameter, **DCC** is added to the report, This parameter is used to indicate whether DCC communication between two neighboring network elements (in two neighboring Level 1 areas) is functional or not. This parameter is populated also, if at least one of those two neighboring ISs is not a Level 2 IS.

Also when the local NE is a Level 1 IS and its neighbor is in a different area, the value of "?" is expected for **Level 2 IS** output parameter.

As a result, the output report will look as the following:

```
/* Neighbor Map for local_system
=====================================================================
TID                   Connected Thru    Product Type   Level 2 IS  DCC
 NSAP
=====================================================================
local_system                            FiberReach
 39 840F 80 000000 0000 0000 0000 08006alad06e 00
Site3NE1              main-1
 39 840F 80 000000 0000 0000 0000 00000e3a0273 00
Site7NE1              main-2                            ?           N
 39 840F 80 000000 0000 0000 0001 08006alad07f 00
*/
```

Note that the NSAP value is part of the same line as the other reported information, but it is wrapped around based on an 80-column screen width.

The output report parameters are:

`TID`

This column contains the TID of the local NE and its direct DCC

Any time the local NE is unable to determine the TID for its neighbor's NSAP, this report will indicate this by showing a "?" in the TID column.

`Connected Through`

This column contains the address of the optical lines through which the local NE is directly connected to the NE identified in the `TID` column. When the main ring interface is provisioned for the *identical* DCC mode using the **set-oc3** or **set-oc12** command the `Connected Through` Address is **main**.

NOTE:
In the event of a DCC link failure between the local NE and its immediate neighbor occurs, the line corresponding to this NE will be removed from the report.

`Product Type` This is the product type of the local NE.

`Level 2 IS` This column identifies whether the listed Network Element is provisioned as a Level 2 IS. Possible values are: "Y" or " ". FiberReach Release 3.0 NEs cannot be provisioned as Level 2 ISs.

Starting with FiberReach Release 3.1, this parameter can have the value of "?" in cases where the local NE is a Level 1 IS and its neighbor is in a different area; as a result, the output value "?" would be expected for this parameter (i.e., the neighbor's Level in such cases cannot be determined).

NOTE:
If the local NE is a Level 2 IS and its neighbor is in a different area, the local NE is expected to know if its neighbor is a Level 2 IS, otherwise the local NE can deduce that the neighbor is a Level 1 IS.

`DCC` This output parameter is available starting with FiberReach Release 3.1 and it is used to indicate whether DCC communication between two neighboring network elements (in two neighboring Level 1 areas) is functional or not. This parameter can have either of two values: "NO" indicating that DCC communications is not really functional. A blank " " indicates that DCC communications is functioning properly.

NOTE:
This new parameter can highlight potential provisioning errors, and reporting the neighbor's NSAP can help identify the needed corrections (e.g, when the local NE is a Level 1 IS and its neighbor is in a different Level 1 area, **`DCC`** will be equal to "NO").

`NSAP` The NSAP address is a 20-byte (40-character) address required by OSI to provide unique identification within the OSI network and consists of a number of fields, some of which are pre-defined and some of which are user-settable. The structure of the NSAP is shown in the following display.

NSAP Structure

NSAP Field:	AFI	IDI	IDI PAD	DFI	Organization ID	RES	RD	Area	Sys. Id.	SEL
Bytes:	1	2		1	3	2	2	2	6	1
Default Value: (hex)	39	840	F	80	000000	0000	0000	0000	none	00
	not provisionable				user provisionable				not provisionable	

The different fields that make up the NSAP address are separated by a single space in the report. For more information on the NSAP's individual fields, refer to the **`ent-ulsdcc`** command page.

RELATED COMMANDS

rtrv-map-network

NAME

rtrv-map-network: Retrieve Network Map

INPUT FORMAT

`rtrv-map-network`;

DESCRIPTION

NOTE:
This command page describes the functionality of the **`rtrv-map-network`** command in FiberReach Release 3.0 and later FiberReach TARP releases.

This command displays all Network Elements (NEs) in the same Level 1 area that are reachable by the local NE through the DCC.

The TIDs included in this report are always determined by real-time TARP NSAP-to-TID queries, even if TARP Data Cache is enabled.

For more explanations on the Level 1 and Level 2 routing and the IS/ES terminology, refer to 824-102-144, *Lucent Technologies 2000 Product Family Operations Interworking Guide for TARP Releases*.

The following is an example output report:

```
/* Network Map for local_system
=========================================================
TID                     Product Type          Level 2 IS
NSAP
=========================================================
local_system            FiberReach
 39 840F 80 000000 0000 0000 0000 08006alad06e 00
Site3NE1
 39 840F 80 000000 0000 0000 0000 00000e3a0273 00
Site7NE1
 39 840F 80 000000 0000 0000 0000 08006alad07f 00
*/
```

Note that the NSAP value is part of the same line as the other information, but is wrapped around based on an 80-column screen width.

The local NE is listed first in the report. The rest of the entries are sorted by TID.

The output report parameters are:

`TID` This column contains the TID of the local and remote NEs in the subnetwork.

Any time the local NE is unable to determine a TID for a reachable NSAP, the network map report indicates this by showing a "?" in the TID column.

NOTE:
When "?" is displayed in the report, it will always appear, along with the related information at the end of the report.

`Product Type` This is the product type of the local NE (for example, DDM-2000 OC-3).

`Level 2 IS` This column identifies whether the listed NE is the default Level 2 IS. If local NE is a Level 2 IS, this will be indicated by "Y" under this column. Possible values are: "Y" or " ". The blank indicates a non-Level 2 IS (Level 1 NE). FiberReach Release 3.0 NEs cannot be provisioned as Level 2 ISs.

`NSAP` The NSAP address is a 20-byte (40-character) address required by OSI to provide unique identification within the OSI network and consists of a number of fields, some of which are pre-defined and some of which are user-settable. The structure of the NSAP is shown in the following display.

NSAP Structure

NSAP Field:	AFI	IDI	IDI PAD	DFI	Organization ID	RES	RD	Area	Sys. Id.	SEL
Bytes:	1	2		1	3	2	2	2	6	1
Default Value: (hex)	39	840	F	80	000000	0000	0000	0000	none	00
	not provisionable				user provisionable				not provisionable	

For more information on the NSAP's individual fields, refer to the **`ent-ulsdcc`** command page.

The report lists the different fields that make up the NSAP address separated by a single space.

If some NEs that have duplicate TIDs were found in the same subnetwork, they will both be reported in the report.

If an NE becomes isolated, and if the user were to run this report while this condition still exists, the isolated NE would no longer be listed in the report; only NEs that are reachable by the local NE are listed.

NOTE 1:
If Multiple Area Addresses have been provisioned at any other NE in the local NE's area, and a TARP NSAP-to-TID translation for a remote NE is successfully completed, this report will only list the information corresponding to the primary NSAP of the remote NE. A remote NE's primary NSAP is the NSAP for which the remote NE responds to an NSAP-to-TID TARP query.

NOTE 2:
In the event Multiple OSI Network Layer Area Addresses have been provisioned at any other NE in the local NE's area, and none of the TARP NSAP-to-TID queries were successful, this report will list each of the possible NSAPs (each NSAP corresponding to one of the multiple Area Addresses) for the remote NE, along with a "?" displayed in the TID column.

RELATED COMMANDS

rtrv-map-neighbor

NAME

rtrv-ne: Retrieve Network Element

INPUT FORMAT

`rtrv-ne;`

DESCRIPTION

NOTE:
This command page describes the functionality of the **`rtrv-ne`** command in FiberReach Release 3.0 and later FiberReach TARP releases.

This command displays the information that is provisioned by the **`set-ne`** command and set by switches on the SYSCTL pack.

For FiberReach Release 3.1 and earlier, the output report appears as follows:

```
/* System Provisioning Report
============================================================
TID=system_name
IDLE=ais|unequipped
CO/RT Selector=location
Product=value  (hw)
*/
```

Starting with FiberReach Release 4.0, the output report appears as follows:

```
/* System Provisioning Report
============================================================
TID=system_name
GNE=not active|limited
RneStat=enabled|disabled
Alarm Group=number
AGNE=yes|no
AGNE Address=TID1
AGNE Address=TID2   ****entry if more AGNEs exist****
IDLE=ais|unequipped
CO/RT Selector=location
Product=value  (hw)
Dormant_Release=dormant_release(nesw|lansw)
Apply:Action=action    Schedule:Date=date Time:time
*/
```

The output parameters are:

`TID` This is the system name, indicated by a string of up to 20 alphanumeric characters. The default value for `TID` is "LT-DDM-2000". The `TID` must be unique for each element in a subnetwork.

`GNE` This parameter is valid starting with FiberReach Release 4.0. The GNE field is used to identify whether this system is the gateway network element (GNE), providing TL1 interface. It has a value of either `limited` or `not active` (default).

A Network Element is considered a "limited" GNE if

- CIT-1 is provisioned with porttype of tl1

If this is not true, the Network Element is considered to be a "not active" GNE.

`RneStat` This parameter is valid starting with FiberReach Release 4.0. Remote NE Status (feature) can have a value of `enabled` or `disabled`. If this parameter has a value of `enabled`, the **`Alarm Group`** and **`AGNE`** will be displayed, as well as the other parameters; otherwise the **`Alarm Group`** and **`AGNE`** are not displayed.

`Alarm Group` This parameter is valid starting with FiberReach Release 4.0. Alarm Group (AG) has a numeric value of `1` through `255`. All NEs in the subnetwork, whether nearby or not, that have the same AG number are members of the same group. All members of the AG will share NE Status information with each other but not with NEs of different alarm Groups. The default AG number for DDM-2000 is `255` and may not have to be changed if a single AG is desired.

`AGNE` This parameter is valid starting with FiberReach Release 4.0. AGNE (Alarm Gateway NE) has a value of `yes` or `no`, which indicates whether this system is an alarm gateway network element. The default value for this parameter is *no*. One AGNE is needed for each alarm group to support the message communications for NE Status features (FE activity, office alarms, miscellaneous discretes, local ACO, and FE user panel status). Any member of the alarm group can be an AGNE but some may be preferred because of their position in the subnetwork or location near a maintenance center. Other NEs of the same alarm group may be provisioned as backup AGNEs if required. At least one NE in each alarm group must be designated as an **agne**. NEs without an AGNE would raise "AGNE communication failure" alarms (if Remote NE Status feature is enabled).

`AGNE Address` This parameter is valid starting with FiberReach Release 4.0. The AGNE Address is the target identifier (TID) of the AGNE for this alarm group. It can be the TID of this NE or any other NE in the alarm group. More than one NE can be an AGNE for backup reasons. If more than one AGNE exists for this alarm group, it is also listed here. AGNE Addresses for NEs in other alarm groups are not listed here. If an AGNE is not defined, this parameter is left blank.

`IDLE` If value is `ais`, the system will insert an Alarm Indication Signal toward the SONET line when channels are not cross-connected or not equipped with path terminating equipment. If value is `unequipped`, the system will insert the unequipped signal toward the SONET line when channels are not cross-connected or not equipped with path terminating equipment.

`CO/RT Selector`
The CO/RT Selector identifies either a central office (CO) shelf or a remote terminal (RT) shelf to control the operation of the miscellaneous discrete points and fan control relays.

`Product`

Product is a keyword that is set by switches on the BBG8 SYSCTL and the value of the SHELFID pin (DDM shelf or ARM shelf) of the backplane to identify the product to be supported.

`DDM-2000 OC-3`
The shelf is part of a DDM-2000 network. The software also checked for the OHCTL and determined that the product is OC-3 (BBG9 or BBG10).

`DDM-2000 OC-12`
The shelf is part of a DDM-2000 network. The software also checked for the OHCTL and determined that the product is OC-12 (BCP4).

`SLC-2000 ARM`
The shelf is part of a *SLC*®-2000 Access System ARM network. The software also checked for the OHCTL and determined that the product is OC-3 (BBG9 or BBG10).

`DDM-2000 FiberReach`
The shelf is part of a FiberReach network. The OHCTL is not a part of the shelf.

`Dormant_Release`

This parameter is reported starting with FiberReach Release 4.0. If a dormant software generic or release is currently stored by the network element, this parameter will report the release number in the form XX.XX.XX.

`Apply`

`Action` This parameter is reported starting with FiberReach Release 4.0. If a dormant software generic is currently stored by the network element, and the **`apply`** command is scheduled for program installation with `Action=`**`install`** on `Date=`**`date`** and `Time=`**`time`**, the date is reported as a 6 digit YYMMDD, and time as HH:MM:SS

If no program installation is scheduled yet, a blank " " is reported under Action. Date and time will report blank " " values also (example: Date= Time=)

If a dormant software generic is currently stored by the network element, and the **`apply`** command is scheduled with `Action=`**`cancel`**, a blank " " is reported for Action. Date and time will report blank " " values also (example: Date= Time=)

`Schedule`

`Date` This parameter is reported starting with FiberReach Release 4.0. If the **`apply`** command is scheduled for program installation with `Action=`**`install`** on `Date=`**`date`**. This parameter is reported as a 6 digit YYMMDD.

`Time` This parameter is reported starting with FiberReach Release 4.0. if the **`apply`** command is scheduled for program installation with `Action=`**`install`**. This parameter is reported as HH:MM:SS

RELATED COMMANDS

rtrv-map-network

set-ne

NAME

rtrv-oc1: Retrieve OC1

INPUT FORMAT

`rtrv-oc1`[:*`Address`*];

DESCRIPTION

This command displays the configuration of OC-1 line(s), as set by the `set-oc1` command.

The input parameter is as follows:

`Address` Address identifies the OC-1 line(s). The default is **`all`**.
Valid OC-1 Addresses: **`all, main-{1,2,all}`**

The output report appears as follows:

```
/* OC-1 Line Provisioning Report
================================================================
 Line      Signal Degrade    AIS
Address      Threshold      Alarm
================================================================
address          n           alm
address          n           alm
  .              .            .
*/
```

The output parameters are:

`Line Address` Address of the OC-1 line.

`Signal Degrade Threshold`
This is the bit error rate (BER) threshold shown as a logarithm to the base 10. The value of *n* is an integer with a range of -5 through -9 corresponding to BERs of 10^{-5} through 10^{-9}, respectively.

`aisalm` This parameter appears in release 2.1 and later. It indicates the the provisioned alarm level of the NSA OC-1 line AIS and has the following values:

- **`cr`** Critical alarm
- **`mj`** Major alarm
- **`mn`** Minor alarm
- **`na`** Not alarmed, but reported (default).

RELATED COMMANDS

set-oc1

NAME

rtrv-oc3: Retrieve OC3

INPUT FORMAT

rtrv-oc3[:*Address*];

DESCRIPTION

This command displays the configuration of OC-3 lines, as set by the **set-oc3** command.

NOTE:
This command is available with FiberReach 3.1 and later releases, using the 28-type OLIU circuit pack.

The input parameter is as follows:

Address Address identifies the OC-3 line(s). The default is **all**.
If the shelf is equipped with 28-type OLIUs in Main unit slots (starting with FiberReach Release 3.1), the valid addresses are:
all, main-{1,2,all}

If the shelf is equipped with 28-type OLIUs in Main unit slots and 22-type OLIUs in Function unit slots (starting with FiberReach Release 3.1), the vaild Function unit addresses are:
fn-{1,2,all}

When the shelf is equipped with 28-type OLIUs in Main unit slots (in FiberReach Release 3.1 and later releases) or equipped with 22-type OLIUs in function unit slots (in FiberReach Release 3.1 and later), the output report appears as follows:

```
/* OC-3 Line Provisioning Report
================================================================
 Line     Signal Degrade       Optical      Sync        AIS
Address     Threshold         Power (hw)   Message     Alarm
================================================================
address        n                x           message      alm
address        n                x           message      alm
  .            .                .             .          .
  .            .                .             .          .
*/
```

For FiberReach Release 4.0 and later releases, the output report appears as follows:

```
/* OC-3 Line Provisioning Report
==================================================================
 Line     Signal Degrade  Sync    AIS     DCC
Address     Threshold    Message  Alarm    Mode
==================================================================
address        n         message  alm   dccmode
address        n         message  alm   dccmode
  .            .            .     .     .
  .            .            .     .     .
*/
```

The output parameters are:

`Line Address` Address of the OC-3 line.

`Signal Degrade Threshold`
This is the bit error rate (BER) threshold shown as a logarithm to the base 10. The value of *n* is an integer with a range of -5 through -9 corresponding to BERs of 10^{-5} through 10^{-9}, respectively.

`Sync Message` Starting with FiberReach Release 3.1 (when equipped with 28-type OLIUs in Main unit slots), This parameter indicates the type of synchronization messaging that has been provisioned for that OC-3 optical interface by the **`set-oc3`** command. The valid values for this parameter are `Kbyte` (default value), `Sbyte`, and `disabled`. The sync messages use the K2 byte or the S1 byte in the SONET line overhead to determine synchronization quality.

`AIS Alarm` This parameter specifies the alarm level of a non-service-affecting OC-3 line AIS failure condition. The valid values are:

- **`cr`** Critical alarm
- **`mj`** Major alarm
- **`mn`** Minor alarm
- **`na`** Not alarmed, but reported (default).

`DccMode` This parameter specifies whether the OC-3 interface is configured for interworking with a ring or 1+1 interface. There are two valid values for this parameter, **`distinct`** (default) or **`identical`**. When configured for **`distinct`** a separate DCC data link (SONET embedded over head channel) is assigned to each OC-3 line in the pair. This is the configuration that supports ring interworking. To allow the OC-3 ring interface to interconnect to a 1+1 OC-3 interface at the far-end, the DccMode should be set to **`identical`**.

In this configuration the same DCC channel is transmitted on both OC-3 lines, and the K-bytes are configured for the 1+1 protection mode to prevent the far-end from initiating an APS channel alarm. The DccMode parameter is only applicable to the Main OC-3 interface in R4.0 and later. Assignment of this parameter always affects both OC-3 lines.

A **"-"** in this column indicates that DccMode is not settable for the specified Address.

RELATED COMMANDS

rtrv-sync

NAME

rtrv-oc12: Retrieve OC12

INPUT FORMAT

rtrv-oc12[:*Address*];

DESCRIPTION

This command displays the configuration of OC-12 lines provisioned by the **set-oc12** command. For FiberReach, this command is available starting with Release 4.0.

The input parameter is as follows:

Address Address identifies the OC-12 line(s). The default is **all**.

If the FiberReach shelf is equipped with 29-type OLIUs in its Main unit slots, the valid addresses are:
all (default)**, main-{1,2,all}**

NOTE:
If slot 1 and 2 are equipped with different pack types (for example, during an upgrade), this report will include data for what is considered at the time as the valid system pack type.

For and later ring releases, The output report appears as follows:

```
/* OC-12 Line Provisioning Report
================================================================
 Line    Signal Degrade   Sync      AIS     DCC
Address    Threshold     Message   Alarm    Mode
================================================================
address         -n       message    alm   dccmode
address         -n       message    alm   dccmode
  .              .          .        .
  .              .          .        .
  .              .          .        .

*/
```

The DCC Mode parameter is applicable to FiberReach Release 4.0 and later releases.

The output parameters are:

`Line Address` Address of the OC-12 line.

`Signal Degrade Threshold`
This is the bit error rate (BER) threshold as a logarithm to the base 10. The value of *n* is an integer with a range of -5 through -9 corresponding to BERs of 10^{-5} through 10^{-9}. If a slot is empty or equipped with something other than an OC-12 optical unit, a hyphen (-) will appear in this column.

`Sync Message` For FiberReach Release 4.0 and later ring releases, this parameter indicates the type of synchronization messaging that has been provisioned for that OC-12 optical interface by the **`set-oc12`** command. The valid values for this parameter are `Kbyte` (default value), `Sbyte`, and `disabled`. The sync messages use the K2 byte or the S1 byte in the SONET line overhead to determine synchronization quality.

`AIS Alarm` This parameter specifies the alarm level of a non-service-affecting OC-12 line AIS failure condition. The valid values are

- **`cr`** Critical alarm
- **`mj`** Major alarm
- **`mn`** Minor alarm
- **`na`** Not alarmed, but reported (default)

`DccMode` This parameter specifies whether the OC-12 interface is configured to interwork with a ring or 1+1 application. There are two valid values for this parameter, **`distinct`** (default) or **`identical`**. When configured for **`distinct`** a separate DCC data link (SONET embedded over head channel) is assigned to each OC-12 line in the pair. This is the configuration that supports ring interworking. To allow the OC-12 interface to interconnect to a 1+1 OC-12 interface at the far-end, the DccMode should be set to **`identical`**. In this configuration the same DCC channel is transmitted on both OC-12 lines, and the K-bytes are configured for the 1+1 protection mode to prevent the far-end from initiating an APS channel alarm. The DccMode parameter is only applicable to the Main OC-12 interface in Release 4.0 and later. Assignment of this parameter always affects both OC-12 lines.

RELATED COMMANDS

set-oc3

set-oc12

NAME

rtrv-passwd: Retrieve Passwords

INPUT FORMAT

`rtrv-passwd`;

DESCRIPTION

This command displays the logins, passwords (in encrypted form), and user type for all logins in the system. This command should *only* be used to back up this information to an external workstation.

Additional workstation software and the **`rstr-passwd`** command will be used to re-create this information on the network element when a new controller is installed.

NOTE:
This command is available to privileged users only.

The output report appears as follows:

```
/* Password Provisioning Report
============================================================
Login : Password : User Type :
============================================================
ATT01:08:sdfsdt-g:privileged:
ATT02:08:67&&8#1g:privileged:
ATT03:08:57s&8#1g:privileged:
DDM-2000:07:kdsm5:-:general:
george:09:RVoc6*bQ1:maintenance:
pete:08:RTnu8*bB:reports-only:
*/
```

The output parameters are:

`Login`	The login name established by the security administrator.
`Password`	The length and current encrypted password selected by the user of the login.
`User Type`	The access class assigned to this login by the security administrator.

RELATED COMMANDS

rstr-passwd

rtrv-lgn

set-lgn

set-passwd

NAME

rtrv-pm-line: Retrieve Performance Monitoring Line

INPUT FORMAT

`rtrv-pm-line`:*`Address`*;

DESCRIPTION

This command displays performance-monitoring data associated with the OC-1, OC-3 and OC-12 (with 29-type OLIUs in Main) lines terminated on the system. Starting with FiberReach Release 3.1, the OC-3 data is available when the Main unit slots are equipped with 28-type OLIU circuit packs.

The 29G-U OLIU circuit pack is available starting with Release 4.0

NOTE:
If Main slots 1 and 2 are equipped with different pack types (for example, during an upgrade), the output report for this command will include data for what is considered at the time as the valid system pack type.

The input parameters are:

`Address` Address of the OC-1, OC-3 or OC-12 lines.
Valid OC-1 Line Addresses: **`all, main-{1,2,all}`**

When the shelf is equipped with 28-type OLIUs in Main (available in Release 3.1 and later), the valid OC-3 Line Addresses are:
`all, main-{1,2,all}`

When the shelf is equipped with 22-type OLIUs in the Function unit slots (available in Release 3.1 and later), the valid OC-3 Line Addresses for the Function unit slots are:
`fn-{1,2,all}`

When the shelf is equipped with 29-type OLIUs in Main (Release 4.0 and later), the valid OC-12 Line Addresses are:
`main-{1,2,all}`

The output report appears as follows:

```
/* Line Performance Monitoring Status Report
   Last initialized:  day registers at yy-mm-dd hh:mm:ss
                      quarter hour registers at yy-mm-dd hh:mm:ss
=================================================================
Address  Start   B2 CV   B2 ES   B2 ES    B2 ES   B2 SES   B2 UAS
         Time                     Type A   Type B
=================================================================
address   time    nn...   nn...    nn...    nn...   nn...    nn...
   .       .        .       .        .        .       .        .
   .       .        .       .        .        .       .        .
-----------------------------------------------------------------
address   time    nn...   nn...    nn...    nn...   nn...    nn...
   .       .        .       .        .        .       .        .
   .       .        .       .        .        .       .        .
*/
```

The output parameters are:

`Address`	This column shows the address of the monitored signal.
`Start Time`	This column indicates the time on the system clock when the data collection started.
`B2 CV`	This parameter shows the number of coding violations for the data collection interval that started at the time reported in the previous column.
`B2 ES`	This parameter shows the number of errored seconds in the data collection interval.
`B2 SES`	This parameter shows the number of severely errored seconds.
`B2 ESA`	This parameter shows the number of Type A errored seconds in the data collection interval. A Type A errored second is a second with a single error.
`B2 ESB`	This parameter shows the number of Type B errored seconds in the data collection interval. A Type B errored second is a second with more than one error but less than the number of errors in a severely errored second. An OC-1 severely errored second contains 12 or more errors. An OC-3 severely errored second contains 32 or more errors. Starting with FiberReach Release 2.2 and 3.1, this is applicable to FiberReach, when the shelf is equipped with 28-type OLIU circuit packs in Main. An OC-12 severely errored second contains 124 or more errors.
`B2 UAS`	This parameter shows the number of unavailable seconds.

NOTE:
Rows that are all zeros are not printed, except for the current day and current quarter, which are always printed.

A greater-than symbol (>) following a count indicates that the register has overflowed and that the indicated count is the register maximum.

A hyphen (-) indicates that the count for that parameter is not available due to a trouble condition.

A blank indicates that the report field does not apply.

A question mark (?) following a count indicates that the count includes data for less than the full counting interval. This may occur if a **`reset`** or **`set-date`** command is entered into the system or if the OLIU circuit pack is inserted or removed. If the count is both overflowed and incomplete, only the greater-than symbol (>) appears.

An asterisk (*) following a count for a parameter indicates that a threshold crossing has occurred for that parameter.

RELATED COMMANDS

init-pm

rtrv-pm-sect

rtrv-pm-tca

rtrv-pmthres-line

set-pmthres-line

NAME

rtrv-pm-sect: Retrieve Performance Monitoring Section

INPUT FORMAT

`rtrv-pm-sect:`*`Address`***`;`**

DESCRIPTION

This command displays performance-monitoring data associated with the following:

- OC-3 optics (if the shelf is equipped with 28-type OLIUs in Main unit slots and/ or 22-type OLIUs in the Function unit slots)
- OC-12 optics (if shelf is equipped with 29-type OLIUs in Main unit slots). The 29-type OLIUs are available starting with FiberReach Release 4.0
- STS-12 section (if shelf is equipped with 29-type OLIUs in Main unit slots)
- STS-1 section (within an OC-1 line, if the shelf is equipped with 26-type OLIUs in Main unit slots,
- STS-3 section (within an OC-3 line, if the shelf is equipped with 28-type OLIUs in Main unit slots, or 22-type OLIUs in the Function unit slots). The 28-type OLIUs are available in FiberReach 3.1 and later releases.

The 29G-U OLIU is available starting with Release 4.0.

NOTE:
If slots 1 and 2 are equipped with different pack types (for example, during an upgrade), the report will include data for what is considered at the time as the valid system pack type.

The input parameter is:

`Address` Address of the OC-1 (if the shelf is equipped with 26-type OLIUs in Main unit slots), OC-3 (if the shelf is equipped with 28G-U OLIUs in Main unit slots) or OC-12 (if shelf is equipped with 29-type OLIUs in Main unit slots) line(s). The address **`all`** may be used to retrieve all performance-monitoring information.

If the shelf is equipped with 26-type OLIUs in Main unit slots, valid OC-1 line addresses are: **`all, main-{1,2,all}`**

If the shelf is equipped with 28-type OLIUs in Main unit slots, valid OC-3 line addresses are: **`main-{1,2,all}`**

If the shelf is equipped with 29-type OLIUs in Main unit slots, valid OC-12 line addresses are: **`main-{1,2,all}`**

If the shelf is equipped with 28-type OLIUs in Main unit slots, and 22-type OLIUs in the Function unit slots, the valid OC-3 line addresses for the Function unit are: **`fn-{1,2,all}`**.

The output report appears as follows:

```
/* Section Performance Monitoring Status Report
   Last initialized:  day registers at yy-mm-dd hh:mm:ss
                      quarter hour registers at yy-mm-dd hh:mm:ss
=================================================================
Address  Start   SEFS
         Time
=================================================================
address  time     aaa
   .      .        .
   .      .        .

-----------------------------------------------------------------
address  time     aaa
   .      .        .
   .      .        .
   */
```

The output parameters are:

`Address`	This indicates the address of the OC-1 line (if the shelf is equipped with 26-type OLIUs in Main unit slots), OC-3 line (if the shelf is equipped with 28-type OLIUs in Main unit slots and/or 22-type OLIUs in the Function unit slots), or OC-12 line (if the shelf is equipped with 29-type OLIUs in Main unit slots).
`Start Time`	This indicates the time on the system clock when the data collection started.
`SEFS`	This column displays the number of severely errored frame seconds.

NOTE:
Rows that are all zeros or "no's" are not printed except for current day and current quarter hour, which are always printed.

A greater-than symbol (>) following a count indicates that the register has overflowed and that the indicated count is the register maximum.

A hyphen (-) indicates that the count for that parameter is not available due to a trouble condition or the parameter is not applicable for current equipage.

A blank indicates that the report field does not apply.

A question mark (?) following a count indicates that the count includes data for less than the full counting interval. This may occur if a **`reset`** or **`set-date`** command is entered into the system or if the OLIU circuit pack is inserted or removed. If the count is both overflowed and incomplete, only the greater-than symbol (>) appears.

An asterisk (*) following a count for a parameter indicates that a threshold crossing has occurred for that parameter.

RELATED COMMANDS

init-pm

rtrv-pm-line

rtrv-pm-tca

rtrv-pmthres-sect

set-pmthres-sect

NAME

rtrv-pm-sts1: Retrieve Performance Monitoring STS-1

INPUT FORMAT

`rtrv-pm-sts1:`*`Address`*;

DESCRIPTION

This command reports path performance-monitoring data associated with STS-1 signals terminating on the network element. For STS-1 cross-connections to non-ring interfaces, data is collected on the active path of the signals and only the active path is reported. For STS-1 cross-connections, path termination exists if one of the interfaces is not SONET (for example, a BBG4B DS3 interface).

For all VT1.5 cross-connections, there is an STS-1 path that is terminated. For OC-1, OC-3 and OC-12 ring interfaces, data is collected on *both* STS-1 ring paths and both paths are reported.

The input parameter is:

`Address` This parameter identifies the address of STS-1 channels. It is the address of the incoming STS-1 signal before it is cross-connected.

If the shelf is equipped with 26-type OLIUs in Main unit slots, valid addresses are:
`all, m{1,2}-1`

If the shelf is equipped with 28-type OLIUs in Main unit slots, valid addresses are:
`all, m{1,2}-{1-3,all}`
(to 28G-U in Main slots with VT1.5 cross-connects)

`all, m-{1-3,all}`
(to 28G-U in Main slots with STS-1 cross-connects)

`all, m{1,2}-{1-3,all}`
(with BBG19 circuit packs in Function slots, and 28-type OLIUs in Main slots)

If the shelf is equipped with 29-type OLIUs in its Main unit slots, the valid addresses are:
`all, {m1,m2}-{1-12,all}`
(to OC-12 in Main with VT1.5 cross-connects. Also applicable to the BBG19 packs in Function Unit slots with Locked DS3 cross-connects).
`all, m-{1-12,all}`
(to OC-12 in Main from DS3 with STS-1 cross-connects).
`{m1,m2}-1`
(to OC-1 in Main with VT1.5 cross-connects. Also applicable to the BBG19 packs in Function Unit slots with Locked DS3 cross-connects).
`all, m-{1,all}`
(to OC-1 in Main from DS3 with STS-1 cross-connects).

The output report appears as follows:

```
/* STS-1 Path Performance Monitoring Status Report
   Last initialized:  day registers at yy-mm-dd hh:mm:ss
                      quarter hour registers at yy-mm-dd hh:mm:ss
=====================================================================
Address  Start   B3 CV    B3 ES  B3 ES   B3 ES   B3 SES  B3 UAS
         Time                    Type A  Type B
=====================================================================
address   time   nn...   nn...   nn...    nn...    nn...   nn...
   .       .       .       .       .        .        .       .
   .       .       .       .       .        .        .       .
---------------------------------------------------------------------
address   time   nn...   nn...   nn...    nn...    nn...   nn...
   .       .       .       .       .        .        .       .
   .       .       .       .       .        .        .       .
*/
```

The output parameters are:

`Address`	This column shows the address of the monitored signal.
`Start Time`	This column indicates the time on the system clock when the data collection started.
`B3 CV`	This column shows the number of coding violations.
`B3 ES`	This column shows the number of errored seconds.
`B3 ES Type A`	This column shows the number of Type A errored seconds. A Type A errored second is a second with a single error.
`B3 ES Type B`	This column shows the number of Type B errored seconds. A Type B errored second is a second with more than one error but less than the number of errors in a severely errored second.
`B3 SES`	This column shows the number of severely errored seconds. A severely errored second contains 9 or more errors.
`B3 UAS`	This column shows the number of unavailable seconds of service. A count of unavailable seconds begins after 10 consecutive severely errored seconds has occurred.

NOTE:
Rows that are all zeros are not printed except for current day and current quarter hour, which are always printed.

A greater-than symbol (>) following a count indicates that the register has overflowed and that the indicated count is the register maximum.

A hyphen (-) indicates that the count for that parameter is not available due to a trouble condition.

A blank indicates that the report field does not apply.

A question mark (?) following a count indicates that the count includes data for less than the full counting interval. This may occur if a **`reset`** or **`set-date`** command is entered into the system or if the DS3, EC1, OLIU circuit pack is inserted or removed. If the count is both overflowed and incomplete, only the greater-than symbol (>) appears.

An asterisk (*) following a count for a parameter indicates that a threshold crossing has occurred for that parameter.

RELATED COMMANDS

init-pm

rtrv-pm-tca

rtrv-pmthres-sts1

set-pmthres-sts1

NAME

rtrv-pm-t1: Retrieve Performance Monitoring T1

INPUT FORMAT

rtrv-pm-t1:*Address*;

DESCRIPTION

This command displays the parameter data associated with one or more DS1 signals passing through the system and is available only if the DS1 performance monitoring feature is set via the **set-feat** command.

Quarter-hour registers are available for DS1 PM, in addition to daily registers.

The input parameter is:

Address Address is the address of DS1 or T1 ports.
Valid Addresses (1x1 protected systems):
all, {a,b,c,d}-1-{1-4,all}

Valid Addresses (1x7 protected systems):
all, {a,b,c}-{1,2}-{1-4,all}
d-1-{1-4,all}

The BBF6 circuit pack supports 2 T1 ports. When addressing ports on a BBF6, only port numbers 1 and 2 are valid. Specifying **all** selects ports 1 and 2 only.

The output report appears as follows:

```
/* DS1 Path Performance Monitoring Status Report
   Last initialized:  day registers at yy-mm-dd hh:mm:ss
=====================================================================
Address  Start     ES-L       CV-P       ES-P      SES-P      UAS-P
         Time                CV-PFE     ES-PFE    SES-PFE    UAS-PFE
=====================================================================
address  time         n          n          n          n          n
                                 n          n          n          n
address  time         n          n          n          n          n
                                 n          n          n          n
  .       .           .          .          .          .          .
  .       .           .          .          .          .          .
  .       .           .          .          .          .          .
```

The output parameters are:

`Address`	This shows the address of the DS1 or T1 signal.
`Start Time`	This indicates the time on the system clock when the data collection started.
`ES-L`	This indicates the number of errored second line (ES-L) counts during the data collection interval that started at the time reported in the second column.
`CV-P`	This indicates the number of path coding violations (CV-P) during the data collection interval that started at the time reported in the second column.
`ES-P`	This indicates the number of errored second path (ES-P) counts during the data collection interval that started at the time reported in the second column.
`SES-P`	This indicates the number of severely errored second path (SES-P) counts during the data collection interval that started at the time reported in the second column.
`UAS-P`	This indicates the number of unavailable second path (UAS-P) counts during the data collection interval that started at the time reported in the second column.
`CV-PFE`	This indicates the number of far-end path coding violations (CV-PFE) during the data collection interval that started at the time reported in the second column.
`ES-PFE`	This indicates the number of errored second path far-end (ES-PFE) counts during the the data collection interval that started at the time reported in the second column.
`SES-PFE`	This indicates the number of severely errored second path far-end (SES-PFE) counts during the data collection interval that started at the time reported in the second column.
`UAS-PFE`	This indicates the number of unavailable second path far-end (UAS-PFE) counts during the data collection interval that started at the time reported in the second column.

NOTE 1:
There are two rows of output for each address. The first row reports ES-L and near-end parameters. The second row reports far-end parameters.

NOTE 2:
Rows that are all zeros are not printed except for current day, which is always printed.

NOTE 3:
Rows that are all zeros are not printed except for current quarter-hour and current day, which are always printed. Any rows containing partial counts will always be printed as well.

A greater-than symbol (>) following a count indicates that the register has overflowed and that the indicated count is the register maximum.

A hyphen (-) indicates that the count for that parameter is not available due to a trouble condition.

A blank indicates that the report field does not apply.

A question mark (?) following a count indicates that the count includes data for less than the full counting interval. This may occur if a **`reset`** or **`set-date`** command is entered into the system or if the DS1, or T1EXT circuit pack is inserted or removed. If the count is both overflowed and incomplete, only the greater-than symbol (>) appears.

An asterisk (*) following a count for a parameter indicates that a threshold crossing has occurred for that parameter.

This command may only be used if the `ds1pm` feature is enabled via the **`set-feat`** command. If this feature is not enabled, the following denial message will be displayed:

```
SSTP
/* Status, execution SToPped */
/* Command not available, feature disabled */
```

If this command is entered on a DDM-2000 loaded with a release of software that does not currently support this feature, the following denial message will be displayed:

```
SSTP
/* Status, execution SToPped */
/* Command not available in this release */
```

RELATED COMMANDS

P init-pm

rtrv-feat

rtrv-pmthres-vt1

set-feat

NAME

rtrv-pm-t3: Retrieve Performance Monitoring T3

INPUT FORMAT

`rtrv-pm-t3:`*`Address`*;

DESCRIPTION

This command displays performance-monitoring data associated with one or more DS3 signals passing through the system. This report is enhanced to display the performance monitoring data for the DS3 line and path incoming from the DSX-3, in addition to the previously displayed data for the DS3 path incoming from the fiber.

Starting with FiberReach Release 3.1, this command is allowed if the shelf is equipped with 28-type OLIUs in Main and DS3 circuit packs in the Function unit slots.

In FiberReach Release 4.0, this command is allowed also if the shelf is equipped with 29/26-type OLIUs in Main and DS3 circuit packs in the Function unit slots.

The line and path PM data from the DSX-3, as well as all near-end and far-end C-bit parity PM data are available ONLY when a BBG4/BBG4B, BBG19 pack is active (in-service) in a function unit slot. When a function unit slot is equipped with one of these new circuit packs, the DS3 line performance monitoring data will always be displayed regardless of what type of mode the DS3 service has been provisioned for. If the *`clear channel (cc)`* mode is selected, the report will display the DS3 line PM data and dash lines (-) for both directions of all DS3 path PM data.

NOTE:
When using the BBG4B or BBG19 circuit pack, this report will show the total number of TCAs associated with DS3 path performance monitoring parameters incoming from the fiber and the DSX-3. The TCAs associated with DS3 line performance monitoring parameters are reported also for the BBG4B. Finally, C-bit parity for Near End or Far End are reported for the BBG4B as well.

When using the BBG4 circuit pack, this report will show the total number of TCAs associated with DS3 path performance monitoring parameters incoming from the fiber only.

The input parameters are:

Address Address of the DS3 signal(s).
Valid DS3 Port Addresses (BBG4/BBG4B): **{f,all}**

Valid DS3 Port Addresses (BBG19):
all, f-{1-2,all}

The output report appears as follows:

```
/* DS3 Performance Monitoring Status Report
   Last initialized:  day registers at yy-mm-dd hh:mm:ss
                      quarter hour registers at yy-mm-dd hh:mm:ss
=========================================================================
Address  Type       Start   SEFS        CV       ES     SES     UAS
         Direction  Time
=========================================================================
address  line       time                 n        n       n
         dsx-p                 n        n        n       n       n
         dsx-pfe               n        n        n       n       n
address  fiber-p               n        n        n       n       n
         fiber-pfe             n        n        n       n       n
   */
=========================================================================
Address  Type       Start   SEFS        CV       ES     SES     UAS
         Direction  Time
=========================================================================
address  line       time                 n        n       n
         dsx-p                 n        n        n       n       n
         dsx-pfe               n        n        n       n       n
address  fiber-p               n        n        n       n       n
         fiber-pfe             n        n        n       n       n
   */
```

The output parameters are:

`Address` This shows the address of the DS3 signal incoming from the DSX-3 or the fiber.

`Type Direction`
This shows the type of the PM data (line, path, path far-end) and the direction from which the signal is received (dsx-3 or fiber).

`Start Time` This indicates the time on the system clock when the data collection started. The parameters are reported as a combination of their type and direction from which they are received. For *line* parameters, refer to CV-L, ES-L, and SES-L definitions. For *dsx-p* and *fiber-p* parameters, see SEFS, CV-P, ES-P, SES-P, and UAS-P definitions. For far-end *dsx-pfe* and *fiber-pfe* path parameters, refer to SEFS, CV-PFE, ES-PFE, SES-PFE, and UAS-PFE definitions.

CV-L	This indicates the number of B3ZS coding violations occurring over the accumulation period for the DS3 signal incoming from the DSX-3.
ES-L	This indicates the number of seconds with at least one B3ZS coding violation or LOS for the DS3 signal incoming from the DSX-3.
SES-L	This indicates the number of seconds with greater than 44 B3ZS coding violations or LOS for the DS3 signal incoming from the DSX-3.
SEFS	This indicates the number of out of frame seconds or AIS seconds for the DS3 signal incoming from the DSX-3 or the fiber.
CV-P	This shows the number of P-bit, adjusted F&M bit, or C-bit parity coding violations for the DS3 signal incoming from the DSX-3 or the fiber.
ES-P	This shows the number of path errored seconds for the DS3 signal incoming from the DSX-3 or the fiber.
SES-P	This shows the number of path severely errored seconds for the DS3 signal incoming from the DSX-3 or the fiber. A severely errored second contains 44 or more errors.
UAS-P	This shows the number of path unavailable seconds of service for the DS3 signal incoming from the DSX-3 or the fiber. A count of unavailable seconds begins after 10 consecutive severely errored seconds has occurred.
CV-PFE	This shows the number of FEBE bits path coding violations at the far-end for a C-bit framed DS3 service that has been provisioned for cbit frame and cpbit format using the **set-t3** command. This applies to a DS3 signal incoming from the DSX-3 or the fiber.
ES-PFE	This shows the number of far-end path errored seconds for a C-bit framed DS3 service that has been provisioned for cbit frame and cpbit format using the **set-t3** command. This applies to a DS3 signal incoming from the DSX-3 or the fiber.
SES-PFE	This shows the number of far-end path severely errored seconds for a C-bit framed DS3 service that has been provisioned for cbit frame and cpbit format using the **set-t3** command. This applies to a DS3 signal incoming from the DSX-3 or the fiber. A severely errored second contains 44 or more errors.
UAS-PFE	This shows the number of far-end path unavailable seconds for a C-bit framed DS3 service that has been provisioned for cbit frame and cpbit format using the **set-t3** command. This applies to a DS3 signal incoming from the DSX-3 or the fiber. A count of unavailable seconds begins after 10 consecutive severely errored seconds has occurred.

NOTE:
Rows that are all zeros are not printed except for current day and current quarter, which are always printed.

A greater-than symbol (>) following a count indicates that the register has overflowed and that the indicated count is the register maximum.

A hyphen (-) indicates that the count for that parameter is not available due to a trouble condition.

A blank indicates that the report field does not apply.

A question mark (?) following a count indicates that the count includes data for less than the full counting interval. This may occur if a **`reset`** or **`set-date`** command is entered into the system or if the DS3 circuit pack is inserted or removed, or a terminal or a facility loopback is established. If the count is both overflowed and incomplete, only the greater-than symbol (>) appears.

An asterisk (*) following a count for a parameter indicates that a threshold crossing has occurred for that parameter.

RELATED COMMANDS

init-pm

rtrv-pm-tca

rtrv-pmthres-t3

set-pmthres-t3

set-t3

NAME

rtrv-pm-tca: Retrieve Performance Monitoring TCA

INPUT FORMAT

`rtrv-pm-tca`;

DESCRIPTION

This command displays the number of threshold crossing alerts (TCAs) associated with signals terminating in or passing through the system. A TCA occurs when a performance-monitoring counter exceeds a user-selected threshold.

NOTE:
If slots 1 and 2 are equipped with different pack types (for example, during an upgrade), the output report for this command will include data for what is considered at the time as the valid system pack type.

The output report appears as follows:

```
/* TCA Performance Monitoring Summary Report
=====================================================================
Address       Section       Line       STS-1    DS3    DS3
                                       Path     Path   Line
=====================================================================
address          n           n
address          n           n
address                                  n       n      n
address                                  n       n
```

NOTE:
Starting with FiberReach Release 3.1, the `DS3 Path` and `DS3 Line` columns apply, when the FiberReach shelf's Function unit slots are equipped with DS3 circuit packs.

If the **`ds1pm`** feature is enabled (via the **`set-feat`** command), the following additional lines will appear in the TCA report:

```
=====================================================================
DS1        TCA   DS1        TCA   DS1        TCA   DS1        TCA
Address  Count   Address  Count   Address  Count   Address  Count
=====================================================================
address  count   address  count   address  count   address  count
  .        .        .        .        .        .        .        .
  .        .        .        .        .        .        .        .
```

If the **`vtpm`** feature is enabled (via the **`set-feat`** command), the following additional lines will appear in the TCA report:

```
=====================================================================
VT1.5      TCA   VT1.5      TCA   VT1.5      TCA   VT1.5      TCA
Address  Count   Address  Count   Address  Count   Address  Count
=====================================================================
address  count   address  count   address  count   address  count
  .        .        .        .        .        .        .        .
  .        .        .        .        .        .        .        .
```

The output report shows the address and type of parameters that are generating TCAs. Blanks in the report indicate that the output parameter does not apply for the specified address.

The output parameters are:

`Address` Address of the monitored signal. This can be the address of an OC-1 line (if the shelf is equipped with 26-type OLIUs in Main unit slots), OC-3 line (if the shelf is equipped with 28-type OLIUs in Main unit slots and/or 22-type OLIUs in the Function unit slots), OC-12 29-type OLIUs (Release 4.0) in Main unit slots, STS-1 channel or DS3 port.

When the shelf is equipped with BBG19 circuit packs in Fn slots, independent TCA counts are reported for each of the two STS-1 channels; one from each ring cross-connected to the BBG19 packs in the Function Units.

`Section` This shows the total number of TCAs associated with section performance monitoring parameters (severely errored frame seconds).

`Line` This shows the total number of TCAs associated with line performance monitoring parameters (B2 CV, B2 ES, B2 ES Type A, B2 ES Type B, B2 SES, B2 UAS, PSC,

`STS-1 Path` This shows the total number of TCAs associated with STS-1 path performance monitoring parameters (B3 CV, B3 ES, B3 ES Type A, B3 ES Type B, B3 SES, or B3 UAS).

`DS3` This shows the total number of TCAs associated with **DS3 path** performance monitoring parameters (severely errored frame seconds, P-bit, adjusted F&M bit, or C-bit parity CV-P, ES-P, SES-P, UAS-P) incoming from the fiber and the DSX-3.

The report will also show the total number of TCAs for **DS3 line** performance monitoring parameters (CV-L, ES-L, SES-L).

NOTE:
When using the BBG4B circuit pack, this parameter will show the total number of TCAs associated with DS3 path performance monitoring parameters incoming from the fiber and the DSX-3. The TCAs associated with DS3 line performance monitoring parameters are reported also for the BBG4B. Finally, C-bit parity for Near End or Far End are reported for the BBG4B as well.

When using the BBG4 circuit pack, this parameter will show the total number of TCAs associated with DS3 path performance monitoring parameters incoming from the fiber only.

For ports on the BBG4B or BBG4 (Starting with FiberReach Release 3.1; when the shelf is equipped with DS3 circuit packs in Fn) circuit packs, path and line TCAs for the DS3 signal incoming from the DSX-3 will be displayed with a port address (f)
Path TCAs for the DS3 signal incoming from the fiber, will be displayed with a channel address; e.g, m-1 (OC-3 or FiberReach)

Independent TCA counts are reported for each of the two DS3 ports (f-1, f-2) in a function unit equipped with BBG19 DS3 circuit packs, and for each channel (m1-x, m2-x) connected to the ports.

`DS1 Address`	This column shows the address of the DS1 signal.
`VT1.5 Address`	This column shows the address of the VT1.5 signal.
`TCA Count`	This column indicates the total number of TCAs associated with the addressed signal.

RELATED COMMANDS

init-pm

rtrv-pm-line

rtrv-pm-sect

rtrv-pm-t3

set-pmthres-line

set-pmthres-sect

set-pmthres-t3

NAME

rtrv-pm-vt1: Retrieve Performance Monitoring VT1.5

INPUT FORMAT

`rtrv-pm-vt1`:*`Address`*;

DESCRIPTION

This command displays the parameter data associated with one or more VT1.5 channels terminating on a DS1, DS1PM, or T1EXT circuit pack. This command is available only if the VT1.5 performance monitoring feature is set via the **`set-feat`** command.

NOTE:
If slots 1 and 2 are equipped with different pack types (for example, during an upgrade), the output report for this command will include data for what is considered at the time as the valid system pack type.

The input parameter is:

`Address` Address is the address of VT1.5 channels.

Valid Addresses: **`all`**

`m-1-{1-7,all}-{1-4,all}`
(For 26-type OLIUs in Main unit slots)

`m-{1-3,all}-{1-7,all}-{1-4,all}`
(For 28-type OLIUs in Main unit slots, Release 3.1 and later)

`m-{1-12,all}-{1-7,all}-{1-4,all}`
(For 29-type OLIUs in MAIN slots, starting in FiberReach Release 4.0).

The output report appears as follows:

```
/* VT1.5 Path Performance Monitoring Status Report
   Last initialized:  day registers at yy-mm-dd hh:mm:ss
                      quarter hour registers at yy-mm-dd hh:mm:ss
=====================================================================
Address  Start   V5 ES   V5 SES   V5 UAS
         Time
=====================================================================
address  time     n        n        n
address  time     n        n        n
  .       .       .        .        .
  .       .       .        .        .
```

The output parameters are:

`Address` This shows the address of the VT1.5 signal.

`Start Time` This indicates the time on the system clock when the data collection started.

`V5 ES` This indicates the number of VT1.5 errored seconds (ES) during the data collection interval that started at the time reported in the previous column.

`V5 SES` This indicates the number of VT1.5 severely errored seconds (SES) during the data collection interval that started at the time reported in the previous column.

`V5 UAS` This indicates the number of VT1.5 unavailable seconds (UAS) during the data collection interval that started at the time reported in the previous column.

NOTE:
Rows that are all zeros are not printed except for current day and current quarter, which are always printed.

A greater-than symbol (>) following a count indicates that the register has overflowed and that the indicated count is the register maximum.

A hyphen (-) indicates that the count for that parameter is not available due to a trouble condition.

A blank indicates that the report field does not apply.

A question mark (?) following a count indicates that the count includes data for less than the full counting interval. This may occur if a **`reset`** or **`set-date`** command is entered into the system or if the DS1, DS1PM, or T1EXT circuit pack is inserted or removed. If the count is both overflowed and incomplete, only the greater-than symbol (>) appears.

An asterisk (*) following a count for a parameter indicates that a threshold crossing has occurred for that parameter.

This command may only be used if the `vtpm` feature is enabled via the **`set-feat`** command. If this feature is not enabled, the following denial message will be displayed:

```
SSTP
/* Status, execution SToPped */
/* Command not available, feature disabled */
```

If this command is entered on a DDM-2000 system loaded with a release of software that does not currently support this feature, the following denial message will be displayed:

```
SSTP
/* Status, execution SToPped */
/* Command not available in this release */
```

RELATED COMMANDS

init-pm

rtrv-pmthres-vt1

NAME

rtrv-pmthres-line: Retrieve Performance Monitoring Threshold Line

INPUT FORMAT

`rtrv-pmthres-line`;

DESCRIPTION

This command displays the system's current OC-1 (26-type), OC-3 (28-type), OC-12 (29-type) and/or (22-type) OLIUs line performance parameter thresholds, as set by the **`set-pmthres-line`** command. The 28-type OLIU circuit pack is available with Release 3.1 and later releases.

The 22-type OLIU circuit pack (in Function unit slots) is available with Release 3.1 and later releases.

The 29-type OLIU circuit pack is available starting with Release 4.0.

NOTE:
If slots 1 and 2 are equipped with different pack types (for example, during an upgrade), this report will include data for what is considered at the time as the valid system pack type.

The output report appears as follows:

```
/* Line Performance Monitoring Thresholds Report
============================================================
Parameter                                   Thresholds
                                         Quarter    Day
                                          Hour
============================================================
B2 Coding Violations OC12 (B2CVOC12)      n          n
B2 Coding Violations OC3 (B2CVOC3)        n          n
B2 Coding Violations OC1 (B2CVOC1)        n          n
B2 Errored Seconds (B2ES)                 n          n
B2 Errored Seconds Type A (B2ESA)         n          n
B2 Errored Seconds Type B (B2ESB)         n          n
B2 Severely Errored Seconds (B2SES)       n          n
B2 Unavailable Seconds (B2UAS)            n          n
*/
```

The first column of the report contains the names of the line performance monitoring parameters. The second and third columns contain the quarter hour and day thresholds for each parameter. The output parameters are:

`B2 Coding Violations OC12` This parameter displays the threshold values for the B2 coding violation counts for OC-12 lines.

`B2 Coding Violations OC3`	This parameter displays the threshold values for the B2 coding violation counts for OC-3 lines.
`B2 Coding Violations OC1`	This parameter displays the threshold values for the B2 coding violation counts for OC-1 lines.
`B2 Errored Seconds`	This parameter displays the threshold values for the B2ES count.
`B2 Errored Seconds Type A`	This parameter displays the threshold values for the B2ESA count.
`B2 Errored Seconds Type B`	This parameter displays the threshold values for the B2ESB count.
`B2 Severely Errored Seconds`	This parameter displays the threshold values for the B2SES count.
`B2 Unavailable Seconds`	This parameter displays the threshold values for the B2UAS count.

A parameter threshold of zero indicates that thresholding is disabled.

A negative threshold value indicates that the coding violation threshold is specified in terms of an equivalent bit error ratio (BER) of 10^{-n}.

RELATED COMMANDS

init-pm

rtrv-pm-line

rtrv-pm-tca

set-pmthres-line

NAME

rtrv-pmthres-sect: Retrieve Performance Monitoring Threshold Section

INPUT FORMAT

`rtrv-pmthres-sect`;

DESCRIPTION

This command displays the system's current section performance parameter thresholds, as set by the **`set-pmthres-sect`** command.

The output report appears as follows:

```
/* Section Performance Monitoring Thresholds Report
================================================================
Parameter                                   Thresholds
                                         Quarter    Day
                                          Hour
================================================================
Severely Errored Frame Seconds (SEFS)     n          n
```

The output parameters are:

`Severely Errored Frame Seconds`
: This parameter displays the threshold values for the SEFS count. A parameter threshold of zero indicates that the thresholding is disabled.

RELATED COMMANDS

init-pm

rtrv-pm-sect

rtrv-pm-tca

set-pmthres-sect

NAME

rtrv-pmthres-sts1: Retrieve Performance Monitoring Threshold STS-1

INPUT FORMAT

`rtrv-pmthres-sts1`;

DESCRIPTION

This command retrieves the system's STS-1 path performance monitoring thresholds, as set by the **`set-pmthres-sts1`** command.

The output report appears as follows:

```
/* STS-1 Path Performance Monitoring Thresholds Report
================================================================
Parameter                                   Thresholds
                                        Quarter        Day
                                         Hour
================================================================
B3 Code Violations (B3CV)                  n            n
B3 Errored Seconds (B3ES)                  n            n
B3 Errored Seconds Type A (B3ESA)          n            n
B3 Errored Seconds Type B (B3ESB)          n            n
B3 Severely Errored Seconds (B3SES)        n            n
B3 Unavailable Seconds (B3UAS)             n            n
*/
```

The first column of the report contains the names of the path performance monitoring parameters. The second and third columns contain the quarter-hour and day thresholds for each parameter. The output parameters are:

`Quarter Hour` This column contains the quarter-hour thresholds for each performance monitoring parameter.

`Day` This column contains the day thresholds for each performance-monitoring parameter.

`B3CV` This parameter shows the threshold for coding violations. A negative threshold value indicates that the coding violation threshold is specified in terms of an equivalent Bit Error Ratio (BER) of 10^n. A threshold of zero indicates that the thresholding is disabled.

`B3ES` This parameter shows the threshold for errored seconds.

`B3ESA` This parameter shows the threshold for type A errored seconds.

`B3ESB` This parameter shows the threshold for type B errored seconds.

B3SES	This parameter shows the threshold for the number of severely errored seconds.
B3UAS	This parameter shows the threshold for unavailable seconds of service.

RELATED COMMANDS

init-pm

set-pmthres-sts1

rtrv-pm-sts1

rtrv-pm-tca

NAME

rtrv-pmthres-t1: Retrieve Performance Monitoring Threshold T1

INPUT FORMAT

`rtrv-pmthres-t1`;

DESCRIPTION

This command displays the current DS1 path and line performance parameter thresholds set for a shelf by the **`set-pmthres-t1`** command, and it is available only if the DS1 performance monitoring feature is set via the **`set-feat`** command.

The output report appears as follows:

```
/* DS1 Path Performance Monitoring Thresholds Report
=====================================================================
Parameter                                              Thresholds
                                                   Quarter      Day
                                                     Hour
=====================================================================
Errored Seconds-Line (ESL)                           n          n
Code Violations-Path SF (CVPSF)                      n          n
Code Violations-Path ESF (CVPESF)                    n          n
Errored Seconds-Path (ESP)                           n          n
Severely Errored Seconds-Path (SESP)                 n          n
Unavailable Seconds-Path (UASP)                      n          n
Code Violations-Path Far End (CVPFE)                 n          n
Errored Seconds-Path Far End (ESPFE)                 n          n
Severely Errored Seconds-Path Far End (SESPFE)       n          n
Unavailable Seconds-Path Far End (UASPFE)            n          n
*/
```

The output parameters are:

`Errored Seconds-Line` This parameter shows the daily threshold for DS1 line errored seconds. Beginning with FiberReach Release 2.1, this parameter will also show the quarter-hour threshold value.

`Code Violations-Path SF`
This parameter shows the daily threshold for DS1 path code violations for SF encoded paths. This parameter will also show the quarter-hour threshold value. A negative threshold value indicates that the coding violation threshold is specified in terms of an equivalent bit error ratio (BER) of 10^n.

`Code Violations-Path ESF`
This parameter shows the daily threshold for DS1 path code violations for ESF encoded paths. This parameter will also show the quarter-hour threshold value. A negative threshold value indicates that the coding violation threshold is specified in terms of an equivalent bit error ratio (BER) of 10^n.

`Errored Seconds-Path` This parameter shows the daily threshold for DS1 path errored seconds. This parameter will also show the quarter-hour threshold value.

`Severely Errored Seconds-Path`
This parameter shows the daily threshold for DS1 path severely errored seconds. This parameter will also show the quarter-hour threshold value.

`Unavailable Seconds-Path`
This parameter shows the daily threshold for DS1 path unavailable seconds. This parameter will also show the quarter-hour threshold value.

`Code Violations-Path Far End`
This parameter shows the daily threshold for DS1 path code violations at the far end. This parameter will also show the quarter-hour threshold value. A negative threshold value indicates that the coding violation threshold is specified in terms of an equivalent bit error ratio (BER) of 10^n.

`Errored Seconds-Path Far End`
This parameter shows the daily threshold for DS1 path errored seconds at the far end. This parameter will also show the quarter-hour threshold value.

`Severely Errored Seconds-Path Far End`
This parameter shows the daily threshold for DS1 path severely errored seconds at the far end. This parameter will also show the quarter-hour threshold value.

`Unavailable Seconds-Path Far End`
This parameter shows the daily threshold for DS1 path unavailable seconds at the far end. This parameter will also show the quarter-hour threshold value.

A threshold of zero indicates that thresholding is disabled.

A negative threshold value indicates that the coding violation threshold is specified in terms of an equivalent Bit Error Ratio (BER) of 10^n.

This command may only be used if the `ds1pm` feature is enabled via the **`set-feat`** command. If this feature is not enabled, the following denial message will be displayed:

```
SSTP
/* Status, execution SToPped */
/* Command not available, feature disabled */
```

If this command is entered on a DDM-2000 system loaded with a release of software that does not currently support this feature, the following denial message will be displayed:

```
SSTP
/* Status, execution SToPped */
/* Command not available in this release */
```

RELATED COMMANDS

rtrv-feat

set-feat

set-pmthres-t1

NAME

rtrv-pmthres-t3: Retrieve Performance Monitoring Threshold T3

INPUT FORMAT

`rtrv-pmthres-t3`;

DESCRIPTION

This command displays the system's current DS3 performance parameter thresholds, as set by the **`set-pmthres-t3`** command.

Starting with FiberReach Release 3.1, this command is allowed if the shelf is equipped with 28-type OLIUs in Main and DS3 circuit packs in the Function unit slots.

In FiberReach Release 4.0, this command is allowed also if the shelf is equipped with 26/29-type OLIUs in Main and DS3 circuit packs in the Function unit slots.

NOTE:
When using the BBG4B or BBG19 circuit pack, this command will show the total number of TCAs associated with DS3 path performance monitoring parameters incoming from the fiber and the DSX-3. The TCAs associated with DS3 line performance monitoring parameters are reported also for the BBG4B. Finally, C-bit parity for Near End or Far End are reported for the BBG4B as well.

When using the BBG4 circuit pack, this command will show the total number of TCAs associated with DS3 path performance monitoring parameters incoming from the fiber only.

The output report appears on the following page.

NOTE:
All DS3 line parameters, in addition to DS3 C-bit parity and all other path parameters for the incoming signal from the DSX-3, are only applicable when a BBG4/BBG4B, BBG19 pack is active (in-service) in a function unit slot.

```
/* DS3 Performance Monitoring Thresholds Report
=====================================================================
   Parameter                                          Thresholds
                                                   Quarter      Day
                                                     Hour
=====================================================================
 Coding Violations-Line (CVL)                        n          n
 Errored Seconds-Line (ESL)                          n          n
 Severely Errored Seconds-Line (SESL)                n          n
 Severely Errored Frame Seconds (SEFS)               n          n
 P-bit Coding Violations-Path (PCV)                  n          n
 F&M bit Coding Violations-Path (FMCV)               n          n
 C-bit Coding Violations-Path (CP)                   n          n
 Errored Seconds-Path (ESP)                          n          n
 Severely Errored Seconds-Path (SESP)                n          n
 Unavailable Seconds-Path (UASP)                     n          n
 Severely Errored Frame Seconds-Far End (SEFSFE)     n          n
 C-bit Coding Violations-Path Far End (CPFE)         n          n
 Errored Seconds-Path Far End (ESPFE)                n          n
 Severely Errored Seconds-Path Far End (SESPFE)      n          n
 Unavailable Seconds-Path Far End (UASPFE)           n          n
 */
```

A threshold of zero indicates that thresholding is disabled.

The output parameters are:

`CVL` These parameters display the threshold for the coding violations count of the DS3 line B3ZS data. A negative value for this parameter indicates that the threshold is specified in terms of an equivalent bit error ratio (BER) of 10^{n}.

`ESL` These parameters display the threshold for the errored seconds count of the DS3 line with at least one B3ZS coding violation.

`SESL` These parameters display the threshold for the severely errored seconds count of the DS3 line with greater than 44 B3ZS coding violations.

`SEFS` These parameters display the threshold values for severely errored frame seconds. This is a path parameter that applies to the incoming DS3 signal from both the DSX-3 and the fiber.

`PCV` These parameters display the threshold for the DS3 P-bit coding violation counts. This is a path parameter that applies to the incoming DS3 signal from both the DSX-3 and the fiber. A negative threshold value indicates that the coding violation threshold is specified in terms of an equivalent BER of 10^n.

`FMCV` These parameters display the threshold for the DS3 F&M bit coding violation counts. This is a path parameter that applies to the incoming DS3 signal from both the DSX-3 and the fiber. A negative threshold value indicates that the coding violation threshold is specified in terms of an equivalent BER of 10^n.

`CP` These parameters display the threshold for the DS3 C-bit coding violation counts. This is a path parameter that applies to the incoming DS3 signal from both the DSX-3 and the fiber. A negative threshold value indicates that the coding violation threshold is specified in terms of an equivalent BER of 10^n.

`ESP` These parameters display the threshold for the DS3 P-bit, adjusted F&M bit, or C-bit errored seconds counts. This is a path parameter that applies to the incoming DS3 signal from both the DSX-3 and the fiber.

`SESP` These parameters display the threshold for the DS3 P-bit, adjusted F&M bit, or C-bit severely errored seconds counts. This is a path parameter that applies to the incoming DS3 signal from both the DSX-3 and the fiber.

`UASP` These parameters display the threshold for the DS3 P-bit, adjusted F&M bit, or C-bit unavailable seconds counts. This is a path parameter that applies to the incoming DS3 signal from both the DSX-3 and the fiber.

`SEFSFE` These parameters display the threshold values for the far-end DS3 C-bit severely errored frame seconds. This is a path parameter that applies to the incoming DS3 signal from both the DSX-3 and the fiber.

`CPFE` These parameters display the threshold for the DS3 far-end C-bit coding violation counts. This is a path parameter that applies to the incoming DS3 signal from both the DSX-3 and the fiber. A negative threshold value indicates that the coding violation threshold is specified in terms of an equivalent BER of 10^n.

ESPFE These parameters display the threshold for the DS3 far-end C-bit errored seconds counts. This is a path parameter that applies to the incoming DS3 signal from both the DSX-3 and the fiber.

SESPFE These parameters display the threshold for the DS3 far-end C-bit severely errored seconds counts. This is a path parameter that applies to the incoming DS3 signal from both the DSX-3 and the fiber.

UASPFE These parameters display the threshold for the DS3 far-end C-bit unavailable seconds counts. This is a path parameter that applies to the incoming DS3 signal from both the DSX-3 and the fiber.

RELATED COMMANDS

init-pm

rtrv-pm-t3

rtrv-pm-tca

set-pmthres-t3

set-t3

NAME

rtrv-pmthres-vt1: Retrieve Performance Monitoring Threshold VT1.5

INPUT FORMAT

`rtrv-pmthres-vt1`;

DESCRIPTION

This command displays the current VT1.5 path performance parameter thresholds set for a shelf by the **`set-pmthres-vt1`** command, and it is available only if the VT1.5 performance monitoring feature is enabled via the **`set-feat`** command.

The output report appears as follows:

```
/* VT1.5 Path Performance Monitoring Thresholds Report
====================================================================
Parameter                                        Thresholds
                                               Quarter  Day
                                                Hour
====================================================================
V5 Errored Seconds (V5ES)                       nnnn     nnn
V5 Severely Errored Seconds (V5SES)             nnnn     nnn
V5 Unavailable Seconds (V5UAS)                  nnnn     nnn
*/
```

In the report, a threshold of zero indicates that thresholding is disabled. A negative threshold value indicates that the coding violation threshold is specified in terms of an equivalent bit error ratio (BER) of 10^{n}.

The output parameters are:

`V5 Errored Seconds`	This parameter shows the quarter hour and daily threshold for VT1.5 errored seconds.
`V5 Severely Errored Seconds`	This parameter shows the quarter hour and daily threshold for VT1.5 severely errored seconds.
`V5 Unavailable Seconds`	This parameter shows the quarter hour and daily threshold for VT1.5 unavailable seconds of service.

This command may only be used if the `vtpm` feature is enabled via the **`set-feat`** command. If this feature is not enabled, the following denial message will be displayed:

```
SSTP
/* Status, execution SToPped */
/* Command not available, feature disabled */
```

If this command is entered on a DDM-2000 loaded with a release of software that does not currently support this feature, the following denial message will be displayed:

```
SSTP
/* Status, execution SToPped */
/* Command not available in this release */
```

RELATED COMMANDS

rtrv-feat

set-feat

set-pmthres-vt1

NAME

rtrv-secu: Retrieve Security

INPUT FORMAT

`rtrv-secu`;

DESCRIPTION

This command retrieves CIT and DCC ports security and timeout information.

Starting with FiberReach Release 3.0, this command will also report on the users who are currently logged into the Network Element via the CIT and DCC ports, as well as the users logged in to the NE via the X.25 PVCs and/or SVCs (**only** if local NE is a GNE). This X.25 section of the report will be displayed (in the TL1 section of the report) after the CIT and DCC information.

Starting with FiberReach Release 4.0, this command will report on the `porttype` of the addressed CIT port (whether used for TL1 or CIT access). The `baudrate` and `echo` (whether enabled or disabled) are reported as well.

For FiberReach Release 3.0, the output report appears as follows:

```
/* Port Security Configuration Report
====================================================================
Access       Security       Timeout,       Active
Link                        minutes        User
====================================================================
cit-1        lockout         0             LUC01
dcc          enabled        15             geo123
--------------------------------------------------------------------
TL1
___
Access       SNPA                          Active
Link                                       User
--------------------------------------------------------------------
dcc                                        user5
*/
```

For FiberReach Release 3.1 and later releases, the output report appears as follows:

```
/* Port Security Configuration Report
==================================================================
Access       Active         Security      Timeout
Link         User
==================================================================
cit-1        user11         enabled           0
------------------------------------------------------------------
dcc                         enabled           15
dcc                         enabled           15
```

For FiberReach Release 4.0 and later releases, the output report appears as follows:

```
/* Port Security Configuration Report
==================================================================
Access       Port      Baud  Echo      Active    Security  Timeout
Link         Type      Rate            User
==================================================================
cit-1        tl1       9600  enabled   user11    enabled   0
dcc                                               disabled  15
------------------------------------------------------------------
dcc                                     user1
*/
```

NOTE:
The top section of the report (CIT/DCC, and TL1 over CIT) and the bottom section (TL1 DCC) are separated by a dotted line.

The output parameters are:

`Access Link` Access link is the address of a CIT or DCC interface.
Valid Addresses: **`dcc, cit-1`**

Valid TL1 DCC Addresses (Starting with FiberReach Release 3.0):
`dcc` (when used for TL1 remote access to a non-GNE)

`Port Type` This parameter is available starting with FiberReach Release 4.0. It specifies whether the provisioned Address (**`cit-1`**) is being used for **`tl1`** or **`cit`** application. If the value reported under Access Link is **`cit-1`**, the reported value for this parameter can be **`tl1`** or **`cit`**. No

	porttype parameter value is reported when the Access Link is **dcc**. This will be designated by a " " (blank).
baudrate	This parameter is available starting with FiberReach Release 4.0. It specifies the baudrate in which TL1 messages are received/transmitted. The values for this parameter are: **1200**, **2400**, **4800**, **9600** (Default), and **19200**. This parameter is reported, only if Port Type is **tl1**; otherwise a " " (blank) is reported.
echo	This parameter is available starting with FiberReach Release 4.0. It specifies whether the character entered needs to be echoed back. The reported values are: **enabled** (default) or **disabled**. This parameter is reported only if Port Type is **tl1**; otherwise a " " (blank) is reported.
Active User	This parameter is available starting with FiberReach Release 3.0. This parameter reports on the user's login id that is currently logged into the NE via the communication port identified by the Access Link column. If no user is currently logged in at the time of the report, this parameter is reported as a dash ("-").
Security	Security shows whether security is enabled, disabled, or in lockout state on the listed CIT or DCC port. The valid values are enabled, disabled, or lockout. When security is enabled, a user must enter a valid login and password to begin a session. When security is in lockout state, only a privileged user is permitted to access the system through the locked out CIT/DCC ports.
Timeout	This parameter shows the time duration, in minutes, before an inactive session is terminated on a specified CIT or DCC interface. If timeout is zero (0), then there is no timeout.

`TL1`

This section is available starting with FiberReach Release 3.0. This section of the report will list the users logged in to the NE via the TL1 dcc. Starting with FiberReach Release 3.1, this section of the report will be displayed in the second (bottom) section underneath the dotted line (------), and it will include information on the addressed TL1 DCC information on the `Active User`. The `TL1` title for this section will be eliminated starting with this release.

NOTE:
Starting with FiberReach Release 4.0, the top section of the report includes (CIT/DCC, and/or TL1 over CIT) information, and the bottom section includes (TL1 DCC). Both sections of the report are separated by a dotted line.

This section of the report will display the following columns:

`Access Link`
See earlier description.

`Active User`
This parameter is available starting with FiberReach Release 3.0. This parameter reports the login id for a user that is currently logged into the NE via the communication port identified by the *`Address`* column. If no user is currently logged in at the time of the report, this parameter is reported as a blank.

RELATED COMMANDS

rtrv-lgn

set-secu

NAME

rtrv-state-eqpt: Retrieve State Equipment

INPUT FORMAT

`rtrv-state-eqpt`[:*`Address`*];

DESCRIPTION

This command displays slot, port, and protection switching state information for the network element (NE).

NOTE:
If slots 1 and 2 are equipped with different pack types (for example, during an upgrade), the report will include data for what is considered at the time as the valid system pack type.

The input parameter is:

`Address` Address identifies one or more slots. The default is **`all`** for all slots in the system.

Valid FiberReach Addresses: **`all, main-{1,2,all}, fn-{1,2,all}, ls-all, ls-{a,b,c,d}-{1,2,all}`**

The output report appears on the following page.

```
/* Equipment State Report
   ==========================================================
   Address   Circuit    Port     Switch     Switch
              Pack    State(s)   State     Priority
   ==========================================================
   address    pack       p         s       priority
   address    pack       p         s       priority
     .         .         .         .          .
     .         .         .         .          .
   ----------------------------------------------------------
   address    pack       p         s       priority
     .         .         .         .          .
     .         .         .         .          .
   address    pack       p         s       priority
*/
```

In the output report, slot types are separated by a row of dashes. Within each slot type, slots are listed in order of their addresses, with protection slots listed last. Slots for control circuit packs (SYSCTL, AUXCTL) are not listed in this report.

The output parameters are:

`Address` Address is the address of a slot.

`Circuit Pack`
Circuit pack is the circuit pack name. A hyphen (-) means not applicable or not equipped.

`Port State(s)`
The state of the signal, from the DSX or T1 interface for DS-1, or DS-3 signals (starting with FiberReach Release 3.1, and when equipped with DS3 circuit packs in Function unit slots), is reported.

Port State (p) may be blank or have one of the following values:

`i` (In-Service) In this state, the port is monitored for failures, and the appropriate alarm is generated if a failure is detected. To retire the alarm and transition the associated port to the `auto` state, the update function must be performed after the input signal is removed.

a (Automatic) In this state, the port will automatically be put `in-service` if a good signal is detected. This state is not allowed for OC-N signals.

n (Not Monitored)
In this state, the signal is not monitored or alarmed. The port will not automatically go to the `in-service` state when a signal is detected.

— Not applicable (not equipped).

The port state is always blank for timing circuits, for protection slots for 1x1 and 1xn protected circuit packs, and for OLIU circuit packs. Starting with FiberReach Release 3.1, the BBG19 (NMLI) circuit pack is supported. The BBG19 DS3 circuit pack is 0x1 protected and thus has independent port states for the service and protection slots. The port state is always a hyphen (`-`) for low-speed slots in the `auto` state.

`Switch State`
This indicates whether the circuit pack is active or standby, corresponding to the state of the protection switching relays. Switch state(s) may be one of the following:

`active` Each OLIU in the main slots is feeding its ring channels incoming from the fiber to the other side for pass-through connections and is sending drop channels to the function units (starting with FiberReach Release 3.1) and/or low-speed slots. Some or all of the received ring channels incoming from this OLIU may be active. This can be determined using the **`rtrv-state-path`** command on this system. Some or all of the transmitted ring

channels outgoing to the fiber may also be active. This can be determined by using the **`rtrv-state-path`** command on *all* remote systems.

`active-fn` For a main OLIU slot, this means that the ring path protection switching is currently being done on this pack, and this pack is choosing each active ring channel from either ring and sending it to the function units (starting with FiberReach Release 3.1) and/or low-speed slots.

For other pack types, active means the signal is being transmitted and received from this pack. Even if the pack is removed, the slot will remain active unless there is a protection circuit pack that service can be switched to.

`standby` The circuit pack or optical line is not currently active.

— Not applicable or not equipped.

For ring applications because of pass-through connections, the switch state will always be active for both main OLIUs. For function units provisioned for

`Switch Priority`

Switch priority is the currently active protection switch request. Only a higher priority protection switch request can cause a protection switch to be done. For ring applications, the switch priority in this report applies only to the equipment switching of the main to function unit signals. See the **`rtrv-state-path`** command for path protection switching information.

NOTE:
For 1X1 or 1+1 protected packs, the Switch Priority is displayed for both packs. The Switch Priority displayed for one pack is displayed for the other. This priority is applicable starting with FiberReach Release 3.1, when the shelf is equipped with DS3 circuit packs in the Function unit slots

Switch priority may be one of the following:

`inhibit` No protection switches will be done until the switch is reset.

`lockout of protection`
This prevents access to the protection pack for the group.

`lockout of service`
This prevents access to the protection circuit pack for the specified service slot.

`forced` No automatic or manual switches will be done until the forced switch is reset.

`APS-pack failure`
Automatic protection switching has occurred due to a circuit pack failure.

`APS-automatic lock`
Traffic is forced and held onto the protection pack, unable to revert to the service pack until midnight. This occurs following four automatic switches from service to protection during a 10-minute interval.

`manual` Traffic has been manually switched to protection.

— No manual or automatic switch requests are active.

For ring applications, the switch priority in this report applies only to the equipment switching of the main OLIUs to low-speed slots, or main OLIUs to Function unit slots (when equipped with DS3 circuit packs in Function unit slots). See the **`rtrv-state-path`** command for path protection switching information.

The switch priority is always blank for protection slots, with one exception. For 1xn protected slots, the protected slot may have a switch priority of `lockout of protection`.

The state of the timing reference is reported in the **rtrv-sync** command.

RELATED COMMANDS

rtrv-alm

rtrv-state-path

rtrv-sync

set-state-t1

set-state-t3

switch-fn

switch-ls

switch-sync

upd

NAME

rtrv-state-path: Retrieve State Path

INPUT FORMAT

`rtrv-state-path`[:*`Address`*];

DESCRIPTION

This command displays signal path state information for path-protected signals dropped at the network element (NE). To determine which of the transmitted ring channels outgoing to the fiber are active, it may be necessary to also use the **`rtrv-state-eqpt`** command on all remote systems.

Any application that is path protected is reported.

NOTE:
If slots 1 and 2 are equipped with different pack types (for example, during an upgrade), the report will include data for what is considered at the time as the valid system pack type.

Any application that is path protected is reported.

The input parameter is:

`Address` In FiberReach systems, *`address`* is any connected VT1.5 path. The default is **`all`** for all paths in the system.

If the shelf is equipped with 26-type OLIUs in Main unit slots, valid VT1.5 addresses are:
`all, {m1,m2}-1-{1-7,all}-{1-4,all}`

If the shelf is equipped with 26-type OLIUs in Main unit slots and DS3 circuit packs in the Function Unit slots (Release 4.0), valid STS-1 addresses are:
`all, {m1,m2}-1`

If the shelf is equipped with 28-type OLIUs in Main unit slots (in FiberReach 3.1, and later), the valid VT1.5 addresses are:
`m{1,2}-{1-3,all}-{1-7,all}-{1-4,all},all`

Starting with FiberReach Release 3.1, if the shelf is equipped with DS3 circuit packs in the Function unit slots, the valid STS-1 addresses for OC-3 are: **`m{1,2}-{1-3,all},all`**

If the shelf is equipped with 29-type (starting with FiberReach Release 4.0) OLIUs in its Main unit slots, the valid VT1.5 Main addresses are:
`m{1,2}-{1-12,all}-{1-7,all}-{1-4,all}`

The valid STS-1 Main addresses are:
`m{1,2}-{1-12,all}`

The output report appears as follows:

```
/* Path Protection Switch State Report
   ==============================================================
   ---------- Ring 1 -----------  ---------- Ring 2 -----------
   Address  Act   APS Condition   Address  Act   APS Condition
   ==============================================================
   address   x     condition      address   x    condition
   address   x     condition      address   x    condition
      .      .        .              .      .        .
      .      .        .              .      .        .
      .      .        .              .      .        .
   */
```

The output parameters are:

`Address` The `address` is any VT1.5 or STS-1 (if equipped with DS3 circuit packs in the Function unit slots) The report always displays both the Ring 1 and Ring 2 addresses.

`Act` This column indicates whether the associated Ring 1 path (receive into local main-1) [receive into local main-1 or fn-1 (Release 3.1 and later)] or Ring 2 path (receive into local main-2) Ring 2 path [receive into local main-2 or fn-2 (Release 3.1 and later)] is active.

This column may contain one of the following:

Y The path is provisioned as drop, and this side is active (path protection switching is allowed).

`(blank)` The path is provisioned as drop, and this side is in standby.

`APS Condition` This column lists the condition that caused the automatic protection switch to occur and appears on the path where the condition was detected. (The manual protection switch request is not shown because the system is nonrevertive.) The condition may be one of the following:

`signal failure`

`pack removal`

`pack failure`

`signal degrade`

Only manual or automatic protection switch (APS) requests that are higher priority than the currently active requests will cause a protection switch to occur. Currently, only the `manual` protection switch request is allowed, and because it is a lower priority than the APS

requests, only APS requests will appear in the report. The APS conditions will remain active while the condition that caused the switch still exists. When that failure clears, the APS condition is changed to blank if no other APS requests exist.

NOTE:
Whenever a VT1.5 cross-connection is made, the STS-1 path is actually terminated. When an STS-1 address is entered, this command does not report any STS-1 signals because individual VT1.5s within that STS-1 can be active on different rings. In general both rings are normally active.

To really know the state of VT cross-connected STS-1 signals, it is necessary to look at the states of all the constituent VT1.5 signals.

RELATED COMMANDS

rtrv-state-eqpt

switch-path-vt1

switch-path-sts1

NAME

rtrv-state-sts1: Retrieve State of STS-1 Channels

INPUT FORMAT

`rtrv-state-sts1`[:*`Address`*];

DESCRIPTION

This command retrieves STS-1 channel states.

NOTE 1:
The channel state will be reported when the path of the channel can be either switched or terminated.

NOTE 2:
If slots 1 and 2 are equipped with different pack types (for example, during and upgrade), the report will include data for what is considered at the time as the valid system pack type.

The input parameter is:

`Address` Address is the address of the STS-1 channels whose state is to be reported. The default is **`all`** STS-1 channels.

If the shelf is equipped with 26-type OLIUs in Main unit slots, the valid address is: **`m-1`**.

If the shelf is equipped with 28-type OLIUs in Main unit slots (in FiberReach 3.1, and later), the valid addresses are: **`m-{1-3,all}`**

If the shelf is equipped with 29-type (starting with FiberReach Release 4.0) OLIUs in both Main unit slots, the valid addresses are: **`m-{1-12,all}`**

The output report appears as follows.

```
/* STS-1 Channel State Report
================================================================
Address     Channel State
================================================================
m-1        AUTO
*/
```

NOTE:
An empty report is displayed if there are no cross-connections or if no channels are monitored (for example, pass-through cross-connections).

The output parameters are:

`Address` Address is the address of an STS-1 channel.

`Channel State` Channel State is the state of the STS-1 channel identified in the address field. It may have one of the following values:

- `auto` Automatic. There is not a good signal on this channel. (STS-1 AIS or STS-1 loss of pointer [LOP] condition may be present.) Alarm or status conditions associated with this channel are not reported. Performance monitoring is not done for the channel. If a good signal is detected on this channel, then the channel will be put in the `in-service` state automatically.
- `is` In-service. The channel is monitored. Alarm and status conditions are reported normally.
- `nmon` Not Monitored. The channel is not being monitored. Alarm and status conditions are not reported for this channel. Performance monitoring is not done for the channel. The channel will remain in this state until the state is changed (with the **`set-state-sts1`** command) or until the cross-connection involving this channel is deleted.

RELATED COMMANDS

dlt-crs-sts1

ent-crs-sts1

rtrv-crs-sts1

rtrv-state-vt1

set-state-sts1

upd

NAME

rtrv-state-vt1: Retrieve State of VT1.5 Channels

INPUT FORMAT

`rtrv-state-vt1`[:*`Address`*];

DESCRIPTION

This command retrieves VT1.5 channel states.

NOTE:
If slots 1 and 2 are equipped with different pack types (for example, during an upgrade), this report will include data for what is considered at the time as the valid system pack type.

The input parameter is:

`Address` Address is the address of VT1.5 channels whose state is to be reported. The default address is **`all`**.

If the shelf is equipped with 26-type OLIUs in Main unit slots, valid addresses are: **`m-1-all`**, **`m-1-{1-7}-{1-4,all}`**

If the shelf is equipped with 28-type OLIUs in Main unit slots (in FiberReach 3.1, and later), the valid addresses are:
`m-{1-3}-all, m-{1-3}-{1-7}-{1-4,all}`

If the shelf is equipped with 29-type (starting with FiberReach Release 4.0) OLIUs in its Main unit slots, the valid VT1.5 channel addresses are:
`main-{1-12,all}-{1-7,all}-{1-4,all}`.

The output report appears as follows. Only channels that are cross-connected will be displayed in the output report.

```
/* VT1.5 Channel State Report
================================================================
Address     Channel State
================================================================
m-1-1-1     auto
m-1-1-2     is
m-1-1-3     nmon
m-1-1-4     auto
*/
```

The output parameters are:

`Address` Address is the address of a VT1.5 channel.

`Channel State` Channel State is the state of the VT1.5 channel identified in the address field. It may have one of the following values:

- `auto` Automatic. There is not a good signal on this channel. (The VT AIS or a VT loss of pointer condition may be present.) Alarm or status conditions associated with this channel are not reported. Also, performance monitoring is not reported. If a good signal is detected on this channel, then the channel will be put in the `in-service` state automatically.
- `is` In-service. The channel is monitored. Alarm and status conditions are reported normally.
- `nmon` Not Monitored. The channel is not being monitored. Alarm and status conditions are not reported for this channel. Performance monitoring is not done for the channel. The channel will remain in this state until the state is changed (with the **`set-state-vt1`** command) or until the cross-connection involving this channel is deleted.

RELATED COMMANDS

dlt-crs-sts1

dlt-crs-vt1

ent-crs-sts1

ent-crs-vt1

rtrv-crs-sts1

rtrv-crs-vt1

rtrv-state-sts1

set-state-vt1

upd

NAME

rtrv-sts1: Retrieve STS1

INPUT FORMAT

`rtrv-sts1`[:*`Address`*];

DESCRIPTION

This command retrieves three types of provisioned parameters for STS-1 channels. The parameter types are:

- signal degrade alarm threshold
- signal fail alarm threshold
- alarm level for sa/nsa STS path AIS condition

NOTE:
If slots 1 and 2 are equipped with different pack types (for example, during an upgrade), this report will include data for what is considered at the time as the valid system pack type.

The input parameter is:

`Address` Address is the address of the STS-1 channels whose parameters are to be reported. The default is **`all`** STS-1 channels.

If the shelf is equipped with 26-type OLIUs in Main unit slots, valid addresses are: **`m-1`**.

If the shelf is equipped with 28-type OLIUs in Main unit slots (in FiberReach 3.1 and later), the valid addresses are: **`m-{1-3,all}`**

If the shelf is equipped with 29-type (starting with FiberReach Release 4.0) OLIUs in its Main unit slots, the valid addresses are: **`m-{1-12,all}`**

Only STS-1 channels that are cross-connected will be displayed in the output report.

When the command is entered with the default address of **`all`** the output report appears as follows:

```
/* STS1 Channel Provisioning Report
=====================================================
SignalDegrade = value
SignalFailure = value

STS-1 AIS Alarm Information
Address      AIS Alarm            AIS Alarm
           Service Affecting  Non Service Affecting
=====================================================
address         sa                nsa
address         sa                nsa
  .             .                 .
  .             .                 .
*/
```

If the address is anything but **`all`**, then the report appears as follows:

```
/* STS-1 Channel Provisioning Report
=====================================================
Address        AIS Alarm           AIS Alarm
           Service Affecting  Non Service Affecting
=====================================================
address        sa                    nsa
address        sa                    nsa
  .             .                     .
  .             .                     .
  .             .                     .
*/
```

The output parameters are:

`SignalDegrade` This is the signal degrade threshold value.

`SignalFailure` This is the signal failure threshold value.

`address` This is the address of the provisioned channel.

`AIS Alarm` One or more columns of information will show the AIS alarm values for service affecting (SA) and non-service affecting (NSA) alarms. SA alarms may have one of the following values:

`cr` Critical alarm (default for ring channels)

`na` Not alarmed, but reported

NSA alarms may have one of the following values:

`mn` Minor alarm (default)

`nr` Not alarmed and not reported.

RELATED COMMANDS

set-sts1

NAME

rtrv-sync: Retrieve Synchronization

INPUT FORMAT

`rtrv-sync`;

DESCRIPTION

This command displays the provisioning and operational information on the synchronization attributes of the DDM-2000, as set by the **`set-sync`** command.

The following pages show output reports for this command and explain the various fields on the reports. Output reports will vary according to the provisioned timing mode and the software release.

The following report is for FiberReach.

```
/* Synchronization Report
 ====================================================================
 Parameter                    Value(s)
 ====================================================================
 Sync Source (src)            address  timing_message


 Shelf Timing
   Provisioned Mode           mode
   Active Timing Mode         mode
   Active Circuit Pack        pack
   Active Reference/Line      ref
   Mode Switching (mdsw)      mode

Sync Message Information
   OC-N Line      Input Message     Output Message     Type
--------------------------------------------------------------------
   address          Message            Message         Type
   address          Message            Message         Type

*/
```

The output parameters for the reports are as follows. Some parameters may not apply to all the reports. The output parameters are:

`Sync Source` The sync source is the optical line provisioned from which shelf timing is derived.

`main-1`

`main-2`

The choices for Sync Source (except the dash) are followed by this message:

`for Shelf only` Sync Source is set for LineTimed shelf.

`Provisioned Mode`
Provisioned Mode is the provisioned synchronization mode. The valid values are:

`LineTimed` Timing derived from the OC-1 payload-carrying signal in the Main slots (when equipped with 26-type OLIUs in Main unit slots).

If the shelf is equipped with 28-type OLIUs in the Main unit slots (Release 3.1 and later), the timing is derived from the OC-3 payload carrying signal in the Main slots.

If the shelf is equipped with 29-type OLIUs in

Main (Release 4.0), the timing is derived from the OC-12 payload carrying signal in the Main slots.

`Active Timing Mode`

Active timing mode is the active timing synchronization mode of the system. The value may be any of the values listed previously in `Provisioned Mode` or one of the following:

`Holdover`	Timing generator is operating in holdover mode because the provisioned references are not available or because the system has been manually switched to holdover mode.
`No Timing`	Timing circuit packs have been removed.
?	Timing mode is unreadable.

`Active Circuit Pack`

Active Circuit Pack indicates which timing generator circuit pack is currently active. The value is `main-1`, `main-2`, or `-` (empty slot).

`Active Reference/Line`

Active Line is the active LineTimed reference for the timing generator. When Provisioned Mode is `LineTimed`, Active Line has the following values:

`main-1`, `main-2`, or `NA` (neither timing reference is active). When the active timing mode is `Holdover`, Active Line is the timing reference that will provide timing if the system switches out of holdover mode.

`Mode Switching`

Mode Switching indicates whether the mode switching for the timing generator is revertive or nonrevertive.

`Revertive`	Revertive mode switching. If the system is provisioned for revertive mode switching, it will automatically switch from holdover mode to the provisioned mode (`LineTimed`) when a good reference becomes available.
`Nonrevertive`	Nonrevertive mode switching. If the system is provisioned for nonrevertive mode, it will switch to holdover mode (as a result of

a timing reference failure) and remain in this mode until it is manually switched back to the provisioned timing mode by the **`switch-sync`** command.

`AIS` DS1 AIS is inserted if a failure exists that prohibits tracing of the DS1 output to the incoming optical line. It is also inserted due to certain incoming synchronization message quality levels on the active timing source.

— Indicates the slot is in the auto state.

? The circuit pack is unreadable, or slot is equipped and empty.

`Active Reference`

This shows the actual line that the DS1 timing output is being derived from, with the following values:

`Sync Message Information`

This heading identifies the section of the report where input and output messages used to determine the timing source quality are listed.

If the shelf is equipped with 28-type OLIUs in Main unit slots (in FiberReach 3.1 and later), or with 29-type OLIUs in Main unit slots (Release 4.0) this section of the report is available only if any of the optical interfaces have been provisioned for `kbyte` (default) or `Sbyte` sync messaging using the **`set-oc3`** (when equipped with 28-type OLIUs in Main) or **`set-oc12`** (when equipped with 29-type OLIUs in Main).

`OC-N Line`

This parameter identifies the addresses of optical interfaces that can carry sync messages.

`Input Message`

`disabled` Indicates that the field is not applicable (for example, if synchronization messaging is disabled).

? Indicates that the message is not readable (for example, due to a line failure).

This column identifies the `Kbyte` input message received on each optical interface line, and may have one of the following values:

`Don't Use` The interface is not suitable for synchronization timing (Quality Level 7).

`Timing Looped Back`
The network element connected to this interface is line-timed from it (Quality Level 7).

`Stratum 4` The interface is receiving timing from a Stratum 4 clock source (Quality Level 6).

`Internal Clock`
This interface is receiving timing from a system in holdover or free running (Quality Level 5). This is applicable to the DDM-2000 systems equipped with TGS (BBF2 or BBF2B) circuit packs.

`Stratum 3` The interface is receiving timing from a Stratum 3 clock source (Quality Level 4) or from a DDM-2000 system equipped with TG3 (BBF4) circuit packs that is either in holdover or free running.

`Stratum 2` The interface is receiving timing from a Stratum 2 clock source (Quality Level 3).

`Sync Quality Unknown`
This interface is receiving timing from a good quality clock source (Quality Level 2).

`Stratum 1` The interface is receiving timing from a Stratum 1 clock source (Quality Level 1).

`Output Message`
This identifies the output message sent out on each OC-N interface line. The valid values for this parameter are the same as those listed for `Input Message`.

`Type` Available in FiberReach Release 3.1 and later (if equipped with 28-type OLIUs in Main unit slots), or 29-type OLIUs in Main (FiberReach Release 4.0).

NOTE:
No Sync messaging of any type is provided for the 22-type in the Function unit slots and therefore, no data is provided for it in this column.

This column identifies the type of sync messaging the optical interface was provisioned for using the **`set-oc3`** and/or **`set-oc12`** command. The valid values are:

`Kbyte`

`Sbyte`

`disabled`

NOTE:
For OC-1 interfaces, this column will only display `Kbyte`.

For OC-3 or OC-12 interfaces in Main, this column will display either `Kbyte`, `Sbyte`, or `disabled`.

`Sync Autoreconfiguration`
This capability allows the system to choose the best timing source to use when it is provisioned for line timing. The valid values are **`enabled`** and **`disabled`**.

Sync Autoreconfig is **`disabled`** by default.

RELATED COMMANDS

rtrv-oc3

rtrv-state

set-sync

set-oc3

switch-sync

NAME

rtrv-trace-sts1: Retrieve Path Trace Characteristics

INPUT FORMAT

`rtrv-trace-sts1`:*`Address`*;

DESCRIPTION

This command retrieves the provisioned transmit and receive path traces for the STS cross-connected STS-1 channel. The command also outputs the actual receive path trace, and the status of the path trace.

NOTE:
For OC-3 in FiberReach (starting with Release 3.1) this feature is only applicable to the STS path terminated to a BBG4B circuit pack.

The input parameter is:

`Address` This is a STS-1 channel address of the SONET path terminating signal for which the path trace is assigned.
Valid Addresses (within OC-3 in FiberReach Release 3.1 and later): **`m-{1-3,all}`**

Valid 29-type (FiberReach Release 4.0) OLIU Addresses: **`m-{1-12,all}`**

Valid 26-type (FiberReach Release 4.0) OLIU Addresses: **`m-1`**

The output report appears as follows:

```
/* STS-1 Path Trace Report
==============================================================================
Address
Parameter Value
==============================================================================
m-1
Status: MISMATCH
INCTRC: ActualReceiveTraceWhichDoesNotMatchProvisionedReceiveTrace789123
EXPTRC: ProvisionedTransmitTraceyzabcdefghijklmnopqrstuvwxyz1234567891
TRC   : ProvisionedReceiveTracexyzabcdefghijklmnopqrstuvwxyz1234567891
------------------------------------------------------------------------------
m-2
Status: GOOD
INCTRC: AID2Receivelmnopqrstuvwxyzabcdefghijklmnopqrstuvwxyz
EXPTRC: AID2Transmitmnopqrstuvwxyzabcdefghijklmnopqrstuvwxyz
TRC   : AID2Receivelmnopqrstuvwxyzabcdefghijklmnopqrstuvwxyz
------------------------------------------------------------------------------
m-3
Status: MISMATCH
INCTRC:
EXPTRC: AID2Transmitmnopqrstuvwxyzabcdefghijklmnopqrstuvwxyz
TRC   : AID2Receivelmnopqrstuvwxyzabcdefghijklmnopqrstuvwxyz1234567891
------------------------------------------------------------------------------
*/
```

The output parameters are:

Address This is a channel address of the SONET path terminating signal for which the path trace is assigned.

Status STS path trace status. This is a status report of the incoming trace. For **rtrv-trace-sts1** messages, *status* may have one of the following values:

- *GOOD* — Good. This indicates that the *INCTRC* and the *EXPTRC* match.
- *MISMATCH* — Mismatch. This indicates that the *INCTRC* and the *EXPTRC* do not match.
- *UNAVAILABLE* — Unavailable. This indicates that there is no *INCTRC* because there has been a path interruption. This is also true for the STS path terminating to other than a BBG4B or BBG11B circut pack for which the path trace is unavailable.

INCTRC Incoming Path trace message. This indicates the incoming Path Trace (J1) content.

EXPTRC Expected incoming Path trace message. This indicates the expected Path Trace (J1) content.

TRC Outgoing Path trace message. This identifies the path trace message to be transmitted.

If the STS-1 channel for which the **`rtrv-trace-sts1`** command was issued is not available, the request will be denied with the following message:

```
SNVS
/* Status, Not in Valid State */
/* Address points to a non-existent channel. */
```

RELATED COMMANDS

set-pthtrc-sts1

NAME

rtrv-t1: Retrieve T1

INPUT FORMAT

rtrv-t1[:*Address*];

DESCRIPTION

This command displays the configuration information and attributes of one or more DS1 or T1 ports, as set by the **set-t1** command.

When this command is used in FiberReach Release 4.0 and later on a DS1 port that is associated with an IMA LAN circuit pack, dashes (-) will be displayed for all parameters except the Port Address, Alarm Level, Port State, PM Mode and Format.

The input parameter is:

Address Address identifies the DS1 or T1 port(s). One or more ports may be specified. The default address is **all**.

Valid Addresses (1x1 protected shelves):
all, {a,b,c,d}-1-{1-4,all}

Valid Addresses (1x7 protected shelves):
all, {a,b,c}-{1,2,all}-{1-4,all}
d-1-{1-4,all}

The BBF6 circuit pack supports 2 T1 ports. When addressing ports on a BBF6, only port numbers 1 and 2 are valid. Specifying **all** selects ports 1 and 2 only.

The output report appears as follows:

```
/* T1 Port Provisioning Report
=====================================================================
 Port    Line Coding    Alarm  AIS Failure   BPV   State  PM  Format
Address                 Level      Thrshld  to LOS       Mode
=====================================================================
a-1-1    ami (hw)         na   yes   -3       no     is   off   none
a-1-2    ami (hw)         na   yes   -3       no    auto  off   none
a-1-3    ami (hw)         na   yes   -3       no    auto  off   none
a-1-4    ami (hw)         na   yes   -3       no    auto  off   none
  .         .             .     .     .       .       .    .     .
  .         .             .     .     .       .       .    .     .
  .         .             .     .     .       .       .    .     .
*/
```

The output parameters are:

`Port Address` Port Address is the address of the DS1 or T1 port.

`Line Coding` Line Coding is the DS1 line coding which may have the value `ami` (alternate mark inversion) or `b8zs` (AMI with bipolar 8-zero substitution). If a previous **`set-t1`** command has set this parameter to a value that overrides the circuit pack switch setting, either of these values will be followed with the string "`override`." Otherwise, it will be followed by the string "`(hw)`" to indicate that the line coding for the port is determined by the hardware switches.

`Alarm Level` Alarm Level describes the alarm level for an incoming DS1 signal failure and may have one of the following values:

`MJ`	Major alarm
`MN`	Minor alarm
`NA`	No alarm

If the system is provisioned for and reporting no alarm but an alarm exists, the NE ACTY LED on the user panel will be illuminated and the fault LED on the circuit pack will flash The condition will be reported in the alarm and status report as a near-end activity.

`AIS` Alarm Indication Signal indicates whether an AIS is to be inserted toward the fiber when a loss of an incoming DS1 signal is detected. The values are `yes` and `no`.

NOTE:
When the "BPV to LOS" DLC parameter is set to `yes`, the AIS parameter is ignored. (An all zeros signal, not AIS, is transmitted to the far end even if the `AIS` parameter is set to `yes`.)

`Failure Thrshld` Failure threshold is the BER threshold in terms of a logarithm to the base 10. The value may be -8, -7, -6, or -3, corresponding to BERs of 10^{-8}, 10^{-7}, 10^{-6}, and 10^{-3}, respectively.

`BPVtoLOS` This column indicates whether an incoming DS1 signal failure (a bit error ratio above the threshold set by the failure threshold parameter) will be translated into an outgoing all-zeros signal at the far end. The values are `yes` and `no`.

`State` State is the state of the port. It may be one of the following:

- `is` In-service. A valid T1 signal from the DSX-1 or T1 interface that is being monitored.
- `auto` Automatic. The system is waiting for a valid T1 signal from the DSX-1 or T1 interface.
- `nmon` Not Monitored

`PM Mode` This column indicated the performance-monitoring (PM) mode of the DS1 or T1 interface and may be one of the following values:

- `on` DS1 PM enabled on this port
- `off` DS1 PM disabled on this port

`Format` This column indicates the PM format of the DS1 or T1 interface and may be one of the following values:

- `none` No DS1 PM possible on this port due to equipage (PM Mode always `off`.)
- `sf` Superframe
- `esf` Extended superframe, near-end and far-end

  The PM format of the DS1 interfaces on the IMA LAN circuit pack always has the value of `esf`.
- `esfn` Extended superframe, near-end only

RELATED COMMANDS

set-state-t1

set-t1

NAME

rtrv-t3: Retrieve T3

INPUT FORMAT

rtrv-t3[:*Address*];

DESCRIPTION

This command displays a port provisioning report for one or all DS3 ports, as set by the **set-t3** command.

Starting with FiberReach Release 3.1, this command is applicable ONLY if the shelf is equipped with 28-type OLIUs in Main and DS3 circuit packs in the Function unit slots.

In FiberReach Release 4.0, this command is applicable also if the shelf is equipped with 26/29-type OLIUs in Main and DS3 circuit packs in the Function unit slots.

The input parameter is:

Address Address identifies the DS3 ports. One port or all ports may be specified. The default address is **all**.

Valid DS3 Port Addresses (for BBG4 and BBG4B): **{f,all}**

Valid DS3 Port Addresses (for BBG19):
all, f-{1-2,all}

The output report appears as follows:

```
/* T3 Port Provisioning Report
=====================================================================
 Port    Mode   AIS   Alarm   Failure   State    PM     PM       PM
Address               Level  Threshold          Mode   Frame   Format
=====================================================================
address  mode   ais   alarm     fth     state   pmmd   frame     fmt
   .       .     .      .        .        .       .      .        .
   .       .     .      .        .        .       .      .        .
   .       .     .      .        .        .       .      .        .
   .       .     .      .        .        .       .      .        .
*/
```

The output parameters are:

`Port Address` Port Address is the address of the DS3 port

`Mode` Mode is the violation monitor removal mode of the DS3 signal. It may have one of the following values:

- `vmr` Monitor and remove DS3 P-bit errors (default value).
- `vm` Monitor but do not remove DS3 P-bit errors.
- `cc` Clear channel. Do not monitor or remove DS3 P-bit errors.

`AIS` AIS indicates whether or not a DS3 alarm indication signal (AIS) should be inserted. The value may be `yes` or `no`. When AIS is set to `yes`:

— DS3 AIS is inserted towards the DSX-3 upon detection of an OC-N loss of signal or STS path AIS incoming from the fiber.

— DS3 AIS is inserted towards the fiber upon detection of DS3 LOS incoming from the DSX-3.

NOTE:
AIS is always inserted if the violation monitor removal mode is provisioned for `vmr` or `vm`.

`Alarm Level` Alarm describes the alarm level for an incoming DS3 signal failure and has the following values:

- `CR` Critical alarm
- `MJ` Major alarm
- `MN` Minor alarm
- `NA` No alarm

If the system is provisioned for and reporting no alarm but an alarm exists, the NE ACTY LED on the user panel will be illuminated, and the fault LED on the circuit pack will flash. The condition will be reported in the

`Failure Threshold` Failure threshold is the BER threshold in terms of a logarithm to the base 10. The value may be either -6 or -3, corresponding to BERs of 10^{-6} and 10^{-3}, respectively.

`State` State is the state of the port with the values:

- `is` In-service. A valid T3 signal from the DSX-3 is being monitored.
- `auto` Automatic. The system is waiting for a valid T3 signal from the DSX-3.
- `nmon` Not Monitored

`PM Mode` This column shows the performance monitoring (PM) mode of the DS3 interface, and may be one of the following values:

- `on` DS3 PM enabled on this port (default value).
- `off` DS3 PM disabled on this port (PM data is not monitored or reported).
- — Indicates no DS3 path PM because `cc` was selected for `Mode`. The DS3 PM report will display the line PM data and dash lines (-) for both directions of the DS3 path PM data when a BBG4B or BBG19 pack is active (in-service) in a function unit slot.

`PM Frame` This parameter indicates the type of framing for the incoming DS3 signal from both the fiber and the DSX-3. It may have one of the following values:

- `m13` The incoming DS3 signal is in M13 framing type (default value).
- `cbit` The incoming DS3 signal is in C-bit framing type.
- — Indicates no DS3 path PM because `cc` was selected for `Mode`. The DS3 PM report will display the line PM data and dash lines (-) for both directions of the DS3 path PM data when a BBG4B or BBG19 pack is active (in-service) in a function unit slot.

`PM Format` This parameter indicates the type of path PMON that will appear in the DS3 PM report. This parameter will appear only if the `vmr` or `vm` mode has already been selected. This parameter may have one of the following values:

- `pbit` When this value is selected, the DS3 PM report will display counts of SEFS as well as DS3 P-bit CV, ES, SES, and UAS (default value).
- `fmbit` When this value is selected, the DS3 PM report will display counts of SEFS as well as DS3 adjusted F&M bit CV, ES, SES, and UAS.
- `cpbit` When this value is selected, the DS3 PM report will display counts of SEFS as well as DS3 CP-bit parity near-end and far-end CV, ES, SES, and UAS.
- — Indicates no DS3 path PM because `cc` was selected for `Mode`. The DS3 PM report will display the line PM data and dash lines (-) for both directions of the DS3 path PM data when a BBG4B or BBG19 pack is active (in-service) in a function unit slot.

RELATED COMMANDS

set-state-t3

set-t3

NAME

rtrv-tl1msgmap: Retrieve Message Map for Operation Systems

INPUT FORMAT

`rtrv-tl1msgmap;`

DESCRIPTION

This command displays the table that associates the OS Application Context Identifier (ACID) to TL1 autonomous message types. This allows the DDM-2000 network element to direct messages to the proper OS destination.

The output report appears as follows:

```
/* TL1 Autonomous Message Map
=====================================================================
    ACID                  ALM ENV CON DB  EVT PM  SW
=====================================================================
tl1Maintenance           | x | x | x |   | x | x | x |
tl1MemoryAdministration  |   |   |   | x |   |   |   |
tl1Test                  |   |   |   |   |   |   |   |
tl1PeerComm              |   |   |   |   |   |   |   |
tl1Other1                | x | x | x | x | x |   | x |
tl1Other2                |   |   |   |   |   |   |   |

      x - enabled
<blank> - disabled
*/
```

The output parameters are:

ACID ACID is the Application Context ID to be assigned to a particular SNPA or SubNetwork Point of Attachment on the x.25 channel. Each ACID defines the type of TL1 messages to be sent by the network element. Default MessageType mappings exist for ACIDs supported by DDM-2000. Supported ACID values are:

tl1Maintenance

tl1MemoryAdministration

tl1Other1

tl1Test

tl1PeerComm

tl1Other2.

msgtype MessageType is one of the supported classes of TL1 messages that the system generates. These message types are not sent to the OS unless they are enabled and associated to an ACID. The supported message types are:

ALM - REPT ALM

ENV - REPT ALM ENV

CON - REPT COND

DB - REPT DBCHG

EVT - REPT EVT

PM - REPT PM

SW - REPT SW

RELATED COMMANDS

ent-tl1msgmap

NAME

rtrv-ulsdcc-l3: Retrieve Upper Layer Section DCC - Layer 3

INPUT FORMAT

`rtrv-ulsdcc-l3`;

DESCRIPTION

NOTE:
This command page describes the functionality of the **`rtrv-ulsdcc-l3`** command in and FiberReach Release 3.0 and all later TARP releases.

This command is currently used to retrieve the parameters in Layers 3 through 7 of the OSI stack, many of which are provisioned by the **`ent-ulsdcc-l3`** command. Layer 3 parameters include the fields of the network service access point (NSAP) address and the enable/disable state of Level-2 IS-IS Routing.

The NSAP is a 20-byte address that provides unique identification for each network element. Only certain portions of this address are user-settable.

The output report appears as follows:

```
/* Upper Layer Section DCC Provisioning Report
=====================================================================
L3 NSAP address:
 idp    dfi org    res  rd   area  sys          sel   lv2is
 xxxxxx xx  xxxxxx xxxx xxxx xxxx  xxxxxxxxxxxx xx    e/d

*/
```

The output parameters are:

`L3 NSAP Address`

This is the 20-byte address assigned to a network element. This is only a string. Under this string, the following seven parameters that make up the NSAP address are identified:

`idp` Where "xxxxxx" indicates the 6-digit hexadecimal IDP field value of the local NE NSAP. This part of the NSAP address is assigned according to the International Standards Organization (ISO) standards. For

SONET systems, the value is set to `39840F` to indicate that U.S. American National Standards Institute (ANSI) is the registration authority responsible for the assignment of the NSAP address.

`dfi` Where "xx" indicates the 2-digit hexadecimal DFI field value of the local NE's NSAP. This part of the NSAP address specifies the format for the rest of the NSAP address. For SONET systems, the value is set to hex `0X80`. This is to specify that a format in alignment with GOSIP version 2 is to be used.

`org` Where "xxxxxx" indicates the 6-digit hexadecimal Organization Id field value of the local NE's NSAP. This part of the NSAP address contains the allocated hexadecimal company code assigned by the ANSI-administered USA Registration Authority for OSI Organization Ids.

`res` Where "xxxx" indicates the 4-digit hexadecimal Reserved field value of the local NE's NSAP. This part of the NSAP address currently has not been assigned a specific purpose by the SONET standards.

`rd` Where "xxxx" indicates the 4-digit hexadecimal Routing Domain field value of the local NE's NSAP. This field is user provisionable. However, until the standard use of this field is defined, this parameter should not be provisioned to a value other than its default value.

`area` Where "xxxx" indicates the 4-digit hexadecimal Routing Area field value of the local NE's NSAP. It is used to identify NEs in the same area. Where multiple areas are defined, IS-IS Level-2 Routing needs to be enabled to allow addressing across areas. This field is user provisionable.

`sys` Where "xxxxxxxxxxxx" indicates the 12-digit hexadecimal System Id field value of the local NE's NSAP. This part of the NSAP address is assigned by IEEE administrators to U.S.-manufactured systems to guarantee a globally-unique NSAP.

`sel` Where "xx" indicates the 2-digit hexadecimal Selector Id field value of the local NE's NSAP. This part of the NSAP address is used to differentiate multiple NSAP addresses within a system. The value of this field is not fixed, but is set in a PDU according to its usage; it is set to "AF" in hex when TARP is run over CLNP. IT has a value of "1D" in hex when TP4 is run over CLNP. IT may be set to "00" in hex for other uses. When retrieved and displayed, it will always be shown as "00" in hex.

`lv2is` This parameter indicates if the local NE is enabled as an IS-IS Level2 Router. Possible values are either e for enable or d for disable.

RELATED COMMANDS

dlt-ulsdcc-l4

ent-ulsdcc-l3

ent-ulsdcc-l4

NAME

rtrv-ulsdcc-l4: Retrieve Upper Layer Section DCC - Layer 4

INPUT FORMAT

rtrv-ulsdcc-l4[:**tdc_rpt=***tdc_rpt*];

DESCRIPTION

NOTE:
This command page describes the functionality of the **rtrv-ulsdcc-l4** command in and FiberReach Release 3.0 and all later TARP releases.

This command is used to retrieve the parameters in Layer 4 of the OSI stack, many of which are provisioned by the **ent-ulsdcc-l4** command. Layer 4 parameters include the TARP timers and TARP Data Cache provisioned parameters and the TARP Manual Adjacencies. the TARP TARP Data Cache information may be retrieved if its retrieval is enabled through the *tdc_rpt* parameter. The input parameter is:

`tdc_rpt` TARP Data Cache reporting; This parameter enables the retrieval of TARP Data Cache. Specifying this parameter will result in the TID, the NSAP address and the protocol address type to be retrieved and output for every entry in the TARP Data Cache for local NE.

This is an optional parameter and it can have the value of either *yes* or *no*. If a value of NULL (no value) is enetered, a value of *no* is assumed and the TARP Data Cache is not retrieved. The default value of this parameter is *no*.

After entering this command, the output report appears as follows:

```
/* Upper Layer Section DCC Provisioning Report
====================================================================
====================================================================
L4TM data:
 L4tlif  L4t1tm L4t2tm  L4t3tm  L4t4tm L4lftm
 xxxx    xxxx   xxxx    xxxx    xxxx   xxxx
--------------------------------------------------------------------
L4AJ NSAP data:
 idp    dfi org    res  rd  area  sys          sel
 xxxxxx xx  xxxxxx xxxx xxxx xxxx  xxxxxxxxxxxx xx
 xxxxxx xx  xxxxxx xxxx xxxx xxxx  xxxxxxxxxxxx xx

L4TDC data: L4etdc=enable
 L4tdctid=LT-DDM-2000
 xxxxxx xx  xxxxxx xxxx xxxx xxxx  xxxxxxxxxxxx xx
 L4tdctid=LT-DDM-2001
 xxxxxx xx  xxxxxx xxxx xxxx xxxx  xxxxxxxxxxxx xx
 L4tdctid=LT-DDM-2002
 xxxxxx xx  xxxxxx xxxx xxxx xxxx  xxxxxxxxxxxx xx
 L4tdctid=LT-DDM-2003
 xxxxxx xx  xxxxxx xxxx xxxx xxxx  xxxxxxxxxxxx xx
  .
  .
  .
  .
  .
  .
  .
  .
*/
```

The output parameters are:

`L4TM data` This is only a string and under this string, the following parameters are identified:

`L4tlif` This parameter reports on the TARP lifetime parameter in TARP PDUs originated by the local NE. The TARP lifetime specifies the maximum number of hops allowed for a TARP PDU. When this number of hops is exceeded, the TARP PDU will not be forwarded. This parameter may have a value in the range from 1 to 65535. The default value for this parameter is 100.

`L4t1tm` This parameter indicates the TARP Timer T1. T1 is the maximum time waiting for response to TARP Type 1 request PDU (search level 1 routing area). This parameter may have a value in the range from 1 to 3600 seconds. Its default value is 15 seconds.

`L4t2tm` This parameter indicates the TARP Timer T2. T2 is the maximum time waiting for response to TARP Type 2 request PDU (search outside of level 1 area). This parameter may have a value in the range from 1 to 3600 seconds. Its default value is 25 seconds.

`L4t3tm` This parameter indicates the TARP Timer T3. T3 is the maximum time waiting for response to Address resolution request (type 5, example: requesting the TID when the NSAP address is known). This parameter may have a value in the range from 1 to 3600 seconds. Its default value is 40 seconds.

`L4t4tm` This parameter indicates the TARP Timer T4. T4 starts when T2 expires. It is used for error recovery. This parameter may have a value in the range from 1 to 3600 seconds. Its default value is 20 seconds.

`L4lftm` This parameter indicates the TARP Loop Detection Buffer Flush Timer. It sets the time period for flushing the TARP Loop Detection Buffer. This parameter may have a value in the range from 1 to 1440 minutes. Its default value is 5 minutes.

`L4AJ NSAP` This header indicates that what follows is the 20-byte (40-digit hex) NSAP address of an entry in the TARP Manually Adjacent NE list. A maximum of two Manually Adjacent NEs can be assigned to an NE.

ajidp Where "xxxxxx" indicates the 6-digit hexadecimal IDP field value of the Manually Adjacent NE.

ajdfi Where "xx" indicates the 2-digit hexadecimal DFI field value of the Manually Adjacent NE.

ajorg Where "xxxxxx" indicates the 6-digit hexadecimal Organization field value of the Manually Adjacent NE.

ajres Where "xxxx" indicates the 4-digit hexadecimal Reserved field value of the Manually Adjacent NE.

ajrd Where "xxxx" indicates the 4-digit hexadecimal Routing Domain field value of the Manually Adjacent NE.

ajarea Where "xxxx" indicates the 4-digit hexadecimal Area field value of the Manually Adjacent NE.

ajsys Where "xxxxxxxxxxxx" indicates the 12-digit hexadecimal System ID field value of the Manually Adjacent NE.

ajsel Where "xx" indicates the 2-digit hexadecimal Selector field value of the Manually Adjacent NE, which is currently reported as "00".

`L4TDC data` This is only a string and under this string, the following parameters are identified:

L4etdc This parameter is used to Enable or Disable the TARP Data Cache. Possible values are either **enable** or **disable**. The default value is **enable**.

L4tdctid
This parameter indicates the Target Identifier (TID) portion of entry in the TARP Data Cache (TDC). This parameter has a maximum of 20 characters and it has no default value.

tdcidp Where "xxxxxx" indicates the 6-digit hexadecimal IDP field value of the NE that was manually entered into the TDC.

`tdcdfi` Where "xx" indicates the 2-digit hexadecimal DFI field value of the NE that was manually entered into the TDC.

`tdcorg` Where "xxxxxx" indicates the 6-digit hexadecimal NSAP's Organization Id field value of the NE that was manually entered into the TARP Data Cache. It specifies the allocated Network Services Provider Code assigned by the ANSI-administered USA Registration Authority for OSI Organization Names. The default value for this parameter is "000000" hex.

`tdcres` Where "xxxx" indicates the 4-digit hexadecimal NSAP's Reserved field value of the NE that was manually entered into the TARP Data Cache. This is a two byte (4-digit hex) NSAP Reserved field of the NE that is to be manually entered into the TDC. The default value for this parameter is the NSAP's Reserved field of local NE.

`tdcrd` Where "xxxx" indicates the 4-digit hexadecimal NSAP's Routing Domain field value of the NE that was manually entered into the TARP Data Cache. This is a 2 byte (4-digit hex) NSAP Routing Domain field of the NE to be manually entered into the TDC. The default value for this parameter is the NSAP's Routing Domain field of local NE.

`tdcarea` Where "xxxx" indicates the 4-digit hexadecimal NSAP's Routing Area field value of the NE that was manually entered into the TARP Data Cache. It identifies the Area within the Routing Domain to which the NSAP address belongs. This is a 2 byte (4-digit hex) NSAP Area field of the NE to be manually entered into the TDC. The default value for this parameter is the NSAP's Area field of local NE.

`tdcsys` Where "xxxxxxxxxxxx" indicates the 12-digit hexadecimal NSAP's System Id field value of the NE that was manually entered into the TARP Data Cache.

The default value for this parameter is the value of the System Identifier Area field of the local NE.

`tdcsel` Where "xx" indicates the 2-digit hexadecimal NSAP's Selector Id field value of the NE that was manually entered into the TARP Data Cache. This parameter is currently being reported as "00".

RELATED COMMANDS

ent-ulsdcc-l4

ent-ulsdcc-l3

dlt-ulsdcc-l3

dlt-ulsdcc-l4

NAME

rtrv-vt1: Retrieve VT1.5

INPUT FORMAT

`rtrv-vt1`[:*`Address`*];

DESCRIPTION

This command retrieves two types of provisioned parameters for VT1.5 channels. The parameter types are:

- Signal degrade alarm threshold
- Alarm level for sa/nsa VT1.5 path AIS condition (Reported only for Release 2.1 and later).

The input parameter is:

`Address` This parameter is available for Release 2.1 and later only. Address is the address of VT1.5 channels whose state is to be reported. The default is **`all`** addresses. If the shelf is equipped with 26-type OLIUs in Main unit slots, valid addressesare:
`m-1-{1-7,all}-{1-4,all}`

If the shelf is equipped with 28-type OLIUs in Main unit slots (in FiberReach 3.1 and later), valid addresses are:
`m-{1-3,all}-{1-7,all}-{1-4,all}`

If the shelf is equipped with 29-type (starting with FiberReach Release 4.0) OLIUs in its Main unit slots, the valid Main unit addresses are:
`m-{1-12,all}-{1-7,all}-{1-4,all}`

Only VT1.5 channels that are cross-connected will appear in the output report.

The output report appears as follows:

```
/* VT1.5 Channel Provisioning Report
============================================================
SignalDegrade = value

VT AIS Alarm Information
Address      AIS Alarm            AIS Alarm
           Service Affecting  Non Service Affecting
============================================================
address         sa                nsa
address         sa                nsa
  .             .                  .
  .             .                  .
  .             .                  .
*/
```

The VT AIS Alarm Information is reported only for Release 2.1 and later.

For Release 2.1 and later, a signal degrade value of zero (0) will not appear in the report. The output parameters are:

`SignalDegrade` This is the signal degrade threshold value.

`address` This is the VT1.5 address of the provisioned channel.

`AIS Alarm` One or more columns of information will show the AIS alarm values for service affecting (SA) and non-service affecting (NSA) alarms. SA alarms may have one of the following values:

`mj` Major alarm (default for ring channels)

`na` Not alarmed, but reported

NSA alarms may have one of the following values:

`mn` Minor alarm (default)

`nr` not alarmed and not reported

RELATED COMMANDS

set-vt1

NAME

set-attr-alm: Set Alarm Attribute

INPUT FORMAT

set-attr-alm[:**almdel=***AlarmDelay*][**,clrdel=***ClearDelay*][**,pmn=***PMN*];

DESCRIPTION

This command sets the alarm holdoff and clear delays.

The input parameters are:

almdel AlarmDelay is the delay for incoming signal and equipment failures. It sets an interval of time that a fault condition is present before an alarm is declared. The delay is in seconds, between 0 and 30, with a default value of 2.

> **NOTE:**
> If a signal degrade threshold is exceeded, the recovery interval for the signal degrade condition may be longer than the provisioned holdoff delay, and an alarm will result. For example, suppose an OC-3 interface with an alarm delay of 20 seconds and a signal degrade threshold of 10^{-6} has a signal degrade failure of 10 seconds. Since the recovery interval for a 10^{-6} error rate threshold is 15 seconds, the total length of the alarm condition (10 seconds of failure plus 15 seconds of recovery) will exceed the provisioned alarm delay of 20 seconds, and an alarm will be declared.

clrdel ClearDelay is the delay in time before an alarm can be declared to be clear. For equipment failures and signal failures (including AIS and FERF), the clear delay time interval begins when the alarm failure clears. For equipment failures, the delay is between 0 and 30 seconds, with a default value of 15 seconds. For signal failures, clear delay is fixed at 15 seconds.

pmn PMN is the Power Minor alarm level, which can be either minor (**MN**) or major (**MJ**). The default is Minor.

When input, this command will cause the following confirmation message to be displayed:

```
/* Caution! Alarm or maint. thresholds are affected by this command.
    You have selected the set-attr-alm command with these parameters:

    AlarmDelay = nn
    ClearDelay = nn */
    PMN = nn */

Execute? (y/n or CANcel/DELete to quit) =
```

RELATED COMMANDS

rtrv-attr-alm

NAME

set-attr-cont: Set Attribute Control

INPUT FORMAT

`set-attr-cont`:*`Address`*:**`desc=`***`Description`*;

DESCRIPTION

This command is used to provision (define) the name of the environmental control points.

The input parameters are:

`Address` Address identifies the control point to be provisioned. There is no default for this parameter.

Valid Addresses: **`cont-{1-4}`**

`desc` Description is a descriptive name for the control point. The description may be an alphanumeric string, upper- and lower-case with no spaces, up to 26 characters long. Symbolic characters may be included in the descriptive name of the control point.

The following symbolic characters have special meanings either for the CIT interface or for the X.25 TL1 interface and cannot be included in the description:

;	semicolon	*?*	question mark
@	at sign		space
\	back slash	*!*	exclamation point
:	colon	*=*	equal sign
"	double quote	*,*	comma

All control characters and special keys cannot be included in the description.

NOTE:
This command will be denied if entered in a system whose CO/RT parameter is set to CO (via the **`set-ne`** command). The following denial message will be displayed:

```
ENSI
/* Equipage, Not equipped for Setting specified Information */
/* Environmental controls can be provisioned only in RT systems. */
```

RELATED COMMANDS

rtrv-attr-cont

NAME

set-attr-env: Set Attribute Environment

INPUT FORMAT

set-attr-env:*Address*[:**alm=***Alarm*][,**almtype=***AlarmType*][,**desc=***Description*];

DESCRIPTION

This command is used to provision (set) the alarm level of the environmental input points. Active inputs appear as entries in the alarm and history reports of the local network element (NE) and generate autonomous TL1 messages through the gateway network element (GNE).

The input parameters are:

Address Address identifies the environmental point to be provisioned. There is no default value for this parameter.

Valid Addresses: **env-{1-15}**, **env-{all}**

NOTE:
The address **env-{all}** is allowed only when **alm** is the only parameter used for this command. The address **env-{all}** is not allowed when the **almtype** and/or **desc** parameters are used.

alm Alarm is the provisioned alarm level of the environmental input and has the following values:

- **cr** Critical alarm
- **mj** Major alarm
- **mn** Minor alarm (default)
- **na** Not alarmed, but reported.

almtype AlarmType. This parameter is used to classify the type of alarm. The description may be an alphanumeric string, upper- and lower-case with no spaces, up to 10 characters long. The original value of AlarmType is "Misc."

desc Description is a descriptive name for the point. The description may be an alphanumeric string, upper- and lowercase with no spaces, up to 26 characters long.

The following symbolic characters have special meanings either for the CIT interface or for the X.25/TL1 interface and cannot be included in the description:

;	semicolon	?	question mark
@	at sign		space
\	back slash	!	exclamation point
:	colon	=	equal sign
"	double quote	,	comma

All control characters and special keys cannot be included in the description.

NOTE:
This command will be denied if entered in a system that has the IO/RT parameter is set to CO (via the **set-ne** command). The following denial message will be displayed:

```
ENSI

/* Equipage, Not equipped for Setting specified Information */
/* Environmental alarms can be provisioned only in RT systems. */
```

RELATED COMMANDS

rtrv-attr-cont

rtrv-attr-env

rtrv-ne

set-attr-cont

NAME

set-date: Set Date and Time

INPUT FORMAT

set-date:[**date=***Date*][,**time=***Time*];

DESCRIPTION

This command sets the date and time. Executing this command will corrupt the current quarter hour and day performance-monitoring (PM) bins.

CAUTION:
If an **apply** *command is scheduled for execution (action=***install)**, the **set-date** command should NOT be issued before program installation is invoked and completed. The user is advised to wait until program installation is completed and the system is reset.

NOTE 1:
If security is enabled on any CIT or DCC port on a shelf, then this command is available to privileged users only for all CIT or DCC ports on the shelf.

NOTE 2:
In the event of a shelf reset, an automatic date and time recovery process takes place by reading the date and time from the remote shelf connected to the interface of the local shelf (in linear applications). In ring applications, the date and time data is recovered from the remote shelf connected to of the local shelf. In both linear and ring applications, if the automatic recovery fails, both date and time are set to default (**70-01-01** for date and **00:00:00** for time).

The input parameters are:

date Date is entered as six digits YYMMDD, where YY is the last two digits of the year, MM is the month, and DD is the day. Default is the current system day.

time Time is entered as six digits HHMMSS, where HH is hours (00-23), MM is minutes (00-59), and SS is seconds (00-59). Default is the current system time.

When input, this command will cause the following confirmation message to be displayed:

```
/*Caution! Execution of this command will corrupt the
    current quarterhour and current day performance monitoring data.
    You have selected the set-date command with these parameters:

    Date = YYMMDD
    Time = HHMMSS */

Execute? (y/n or CANcel/DELete to quit) =
```

RELATED COMMANDS

apply

NAME

set-feat: Set Feature

INPUT FORMAT

`set-feat`:**`feat=`***`Feature`*,**`act=`***`Action`*;

DESCRIPTION

This command enables a user to configure the network element for feature options that are licensed for use.

NOTE:
This command is available to privileged users only.

The input parameters are:

`feat` Feature is the feature option available to the user, and it may have one of the following values:

- `vtpm` This feature provides performance-monitoring of cross-connected VT1.5 services.
- `ds1pm` This feature provides performance-monitoring of cross-connected (dropped) DS1 services in ring systems.
- `banner` Starting with FiberReach Release 4.0, this feature allows a customer to display a user provisionable proprietary notice upon login in order to enhance system's security

`act` Action is the action the user wants to perform on the listed feature, and it may have one of the following values:

- `enabled` This enables a feature option. This action will also unblock the use of commands needed by this feature.
- `disabled` This disables a feature option. This action will also block the use of commands needed by this feature. The user may be required to reprovision the shelf before disabling a feature.

If a user fails to remove all equipment or reprovision parameters associated with a feature before disabling that feature, the command will be denied with the following message:

```
SNVS
/* Status, Not in Valid State */
/* System must be reprovisioned to disable <Feature>. */
```

If this command is entered and no main OLIUs are equipped, there is no place to store a backup copy of the feature options. Thus, the command will be denied with the following message:

```
EQWT
/* EQuipage, Wrong Type */
/* No change in provisioning - both main slots are unequipped */
```

Enabling a feature will cause the following confirmation message to be displayed:

```
/* ACCESS TO, AND USE OF THIS <feature> FEATURE IS PERMITTED ONLY
   IF SPECIFICALLY AND EXPRESSLY AUTHORIZED UNDER THE RELEVANT
   DDM-2000 SOFTWARE AGREEMENT BETWEEN LUCENT TECHNOLOGIES
   AND CUSTOMER.

   You have selected the set-feat command with the parameters:
   Feature = feature
   Action = action  */

Execute? (y/n or CANcel/DELete to quit) =
```

Disabling a feature will cause the following confirmation message to be displayed:

```
/* Caution! Execution of this command will disable all of the
   system capabilities associated with the <feature> feature
   and circuit packs which support that feature will no longer
   provide access to that feature.

   You have selected the set-feat command with these parameters:
   Feature = feature
   Action = action  */

Execute? (y/n or CANcel/DELete to quit) =
```

RELATED COMMANDS

rtrv-feat

NAME

set-fecom: Set Far-End Communications

INPUT FORMAT

set-fecom:*Address*[:**com=***Communications*][,**nsus=***NS/US*];

DESCRIPTION

This command enables or disables communication over the section data communication channels (DCC). A DCC is an embedded overhead communications channel in the SONET line used for end-to-end communications and maintenance. The DCC carries alarm, control, and status information between network elements (NEs).

NOTE:
This command is available to privileged users only.

Starting with Release 3.0, this command will complete successfully if it is executed during a remote login session.

The input parameters are:

Address Address identifies the address of the DCC.
Valid Addresses: **dcc-{m1,m2,all}**

Starting with FiberReach R4.0 and later, **dcc-m** is the only valid address when the Main OC-3 or OC-12 interface is set to the "identical" dcc mode with the **set-oc3** or **set-oc12** command.

com This parameter indicates whether communication over a specified DCC is enabled or disabled. The valid values are **enabled** or **disabled**. The default value is **enabled**.

nsus NetworkSide/UserSide (NS/US) is the identification of the DCC identity for the NE. Each DCC on the NE must define its NS/US identity in the OSI network. When the NS/US parameter is the same at both ends, an alarm is active. NetworkSide/UserSide may have the following parameter values:

ns Network Side (NS) defines this end of the DCC to be a network site. For DDM-2000 networks either termination of the DCC can be this value as long as the other termination is different. Default values are listed on the following page.

us User Side (US) defines this end of the DCC to be a user site. For DDM-2000 networks, either termination of the DCC can be this value as long as the other termination is different. Default values are listed on the following page.

The following chart shows default settings for the NS/US parameter:

Rings Applications	dcc-m1	dcc-m2
OC-1 OLIUs	us	ns
OC-3/OC-12 OLIUs	us	ns

For FiberReach Release 4.0 and later when the main OC-3 or OC-12 interface is provisioned for the identical DCC mode using the **`set-oc3`** or **`set-oc12`** commands the settings for both main interfaces is the same value with a default of **`us`**.

When this command is input, the following confirmation message will be displayed:

```
 /* Caution!  Network element access is affected by this command.
    You have selected the set-fecom command with these parameters:

    Address = address
    Communications = enabled
    NS/US = value */

Execute? (y/n or CANcel/DELete to quit) =
```

If the **nsus** parameter is changed, no NE reset will be caused and the following confirmation message will be displayed:

```
/* Caution!  Network Element access is affected by this command.
   You have selected the set-fecom command with these parameters:

   Address = address
   Communications = enabled
   NS/US = value */
```

RELATED COMMANDS

rtrv-fecom

rtrv-map-neighbor

rtrv-map-network

NAME

set-lgn: Set Login

INPUT FORMAT

`set-lgn`[:**`act=`***`Action`*];

DESCRIPTION

This command enters, edits, and deletes logins and passwords. Prior to the first use of this command, the 3 default logins are `LUC01`, `LUC02`, and `LUC03`. The default password is `DDM-2000`.

NOTE 1:
Some situations (for example, a software upgrade or a new circuit pack installation) may cause the default login to change. Users who may no longer gain system access with the `ATT`*XX* login should try `LUC`*XX*.

NOTE 2:
This command is available to privileged users only.

NOTE 3:
To enable security, a privileged user must execute the **`set-secu`** command. Creating logins and passwords does *not* automatically enable security.

A maximum of 100 (general, maintenance and reports-only user) logins is supported. When security is enabled, the following four types of users are permitted to access the system with a valid login and password:

`privileged user`	The privileged user may execute any commands, including restricted commands.
`general user`	The general user may execute any commands that are not restricted to privileged users.
`maintenance`	The maintenance user may only execute commands that access the system, extract reports, and execute maintenance functions through a specific set of commands. No privileged commands are allowed to be executed by maintenance users.
`reports-only`	The reports-only user may only execute commands that access the system and extract reports.

Starting with FiberReach Release 4.0, a total of 150 users will be allowed. 147 users can be distributed among *`general, maintenance,`* and/or *`reports-only`*. A maximum of 3 *`privileged`* users will still be allowed.

All users may use the **`set-passwd`** command to modify their own passwords.

The input parameters are:

`act` Action has one of the following values:

`enter` Enter a new login and password pair (default value). Login is a case-sensitive alphanumeric string consisting of a minimum of five and a maximum of ten alphabetic characters and/or numbers. When entering a new login, the type of user (`privileged user`, `general user`, `maintenance` or `reports-only`) must be specified and a password should also be assigned to the new user. A user may then use the **`set-passwd`** command to modify his/her own password after the login has been activated.

Password is a case-sensitive string of alphanumeric and symbolic characters. Password may have a minimum of six and a maximum of ten characters. Additionally, the password must include at least two numeric characters and one symbolic (non-alphabetic and non-numeric) character. The following symbolic characters have special meanings either for the User Interface or for the X.25 TL1 interface and cannot be included in a password:

;	semicolon		space
@	at sign	*?*	question mark
\	back slash	*!*	exclamation point
:	colon	*=*	equal sign
"	double quote	*,*	comma

Additionally, the following control characters and special keys CANNOT be included in a password:

<CR>	carriage return	*<tab>*	tab key
<bksp>	backspace key	*<esc>*	escape key
<del>	delete key		

`passwd_age`

Password Aging interval. Starting with FiberReach Release 4.0, this parameter specifies the period in days after which the user has to change his/her password. It can have a value between *7* and *999*, or *0*. A value of *0* disables the password aging feature (default).

`edit` Change an existing login and/or password

`passwd_age`
Password Aging interval: Starting with FiberReach Release 4.0, this parameter specifies the period in days after which the user has to change his/her password. It can have a value between *7* and *999*, or *0*. A value of *0* disables the password aging feature (default).

`delete` Delete an existing login.

The **`set-lgn`** command executes in prompt mode. Based on the action selected (enter, edit, or delete), different dialogs are displayed and the user is prompted for input. These dialogs are shown on the following pages, and the user input is indicated with bold type.

The following screen shows the dialog to enter a login:

```
set-lgn:act=enter;
enter the new login = new_login
enter password for new login = new_password
reenter password for new login = new_password
enter user type for this login = user_type

/* Caution! Network Element access is affected by this command.
   You have selected the set-lgn command with these parameters:

   Action = enter
   Login = new_login
   User Type = user_type */

Execute? (y/n or CANcel/DELete to quit) =
;
```

NOTE:
Passwords will not be displayed when they are entered.

Starting with FiberReach Release 4.0, the following screen shows the dialog to enter a login:

```
set-lgn:act=enter;
enter the new login = new_login
enter password for new login = new_password
reenter password for new login = new_password
enter user type for this login = user_type
enter password age for this login = passwd_age

/* Caution! Network Element access is affected by this command.
   You have selected the set-lgn command with these parameters:

   Action = enter
   Login = new_login
   User Type = user_type
   Password Age = passwd_age */

Execute? (y/n or CANcel/DELete to quit) =
;
```

NOTE:
For the password aging parameter, a user entry of <CR> initializes the value to **0**.

The following screen shows the dialog to edit a login:

```
set-lgn:act=edit;
enter the login to be changed = old_login
enter the new login = new_login
enter password for new login = new_password
reenter password for new login = new_password
enter user type for this login = user_type

/* Caution! Network Element access is affected by this command.
   You have selected the set-lgn command with these parameters:

   Action = edit
   Old Login = old_login
   New Login = new_login
   Old User Type = user_type
   New User Type = user_type  */

Execute? (y/n or CANcel/DELete to quit) =
;
```

Starting with FiberReach Release 4.0, the following screen shows the dialog to edit a login:

```
set-lgn:act=edit;
enter the login to be changed = old_login
enter the new login = new_login
enter password for new login = new_password
reenter password for new login = new_password
enter user type for this login = user_type
enter password age for this login = passwd_age

/* Caution! Network Element access is affected by this command.
   You have selected the set-lgn command with these parameters:

   Action = edit
   Old Login = old_login
   New Login = new_login
   Old User Type = user_type
   New User Type = user_type
   Password Age = passwd_age  */

Execute? (y/n or CANcel/DELete to quit) =
;
```

NOTE:
For the password aging parameter, a user entry of <CR> initializes the value to **0**.

The following screen shows the dialog to delete a login:

```
set-lgn:act=delete;
enter the login to be deleted = user_login
/* Caution! Network Element access is affected by this command.
   You have selected the set-lgn command with these parameters:

   Action = delete
   Login = user_login  */

Execute? (y/n or CANcel/DELete to quit) =
;
```

If the login value does not match the valid login definition (syntactically incorrect), the following message will appear:

```
/* Entry does not follow rules for logins. */
/* Logins must be 5 to 10 alphabetic characters and/or numbers;
   characters allowed are A..Z, a..z and/or 0..9 */
```

The user may try once again to enter a login. If the user enters a login that does not match the valid login definition, the following denial message will be displayed:

```
IDEI
/* Input, Data Entry Invalid */
/* Entry does not follow rules for passwords and logins. */
```

If the entered password value does not match the valid password definition (syntactically incorrect), the following message will appear:

```
/* Entry does not follow rules for passwords. */
/* Passwords must be 6 to 10 characters, with at least
   2 non alphabetic characters and additionally, at
   least 1 symbolic characters allowed are:  A..Z or a..z,
   0..9, all symbolic characters, EXCEPT the following:

     ;   semicolon        ?   question mark
     @   at sign             space
     :   colon            =   equal sign
     "   double quote     ,   comma
     \   back slash       !   exclamation point

*/
```

The user may try once again to enter a password. If the user enters a password that does not match the valid password definition, the following denial message will be displayed:

```
IDEI
/* Input, Data Entry Invalid */
/* Entry does not follow rules for passwords and logins. */
```

Privileged user logins can be edited to change the login name, password, or both. However, privileged logins cannot be deleted. If an attempt is made to delete a privileged user login, the following denial message will be displayed:

```
SDNC
/* Status, Data Not Consistent */
/* Privileged user logins cannot be deleted. */
```

If an attempt is made to add a privileged user login, the following message will keep displaying until a valid user type (general, maintenance, or reports-only) is entered:

```
/* Not a valid response */
/* Select from: */
   1. general
   2. maintenance
   3. reports-only
enter user type for this login [general] =
```

When a user selects the `edit` or `delete` option for a login but the login entered does not exist, the following message will be displayed:

```
IIUS
/* Input, Invalid USer identifier */
/* login <value> is unknown. */
```

If a user invokes this command with **`Action`**=`enter` and the entered login matches the login definition (syntactically correct) but *also* matches an already existing valid login, the attempt will be denied and the following denial message will be displayed:

```
IIUS
/* Input, Invalid USer identifier */
/* login <value> is unknown. */
```

If a user attempts to enter another login when the maximum supported logins already exists, the following denial message will appear:

```
SLEM
/* Status, List, Exceeds Maximum */
/* Maximum number of logins already exists.
   Cannot enter another login. */
```

Starting with FiberReach Release 4.0, if a Network Element receives an invalid value for the Password Age parameter, the following denial message will be displayed:

```
IDNV
/* Input, Data Not Valid */
/* Invalid Password Age value paswd_age. */
```

RELATED COMMANDS

rtrv-lgn

set-passwd

set-secu

NAME

set-link: Set CIT Link Configuration

INPUT FORMAT

`set-link:pg=`*`pagelength`*;

DESCRIPTION

This command sets the configuration of the current user's craft interface terminal (CIT) link.

The input parameter is:

`pg` PageLength is the vertical size of the displayed page in lines. The value may be an integer between 3 and 150 with a default of 24. If the page length is set to zero, no pager is used and system output is sent directly to the screen. The page length is set to the default value each time a new CIT session is started.

RELATED COMMANDS

rtrv-link

NAME

set-ne: Set Network Element

INPUT FORMAT

set-ne:tid=*TID*[,**cort=***CO/RT*][,**idle=***IdleChannelSignal*];
(For FiberReach Release 3.1 and earlier)

set-ne:tid=*TID*[,**rnestat=***RneStat*][,**almgrp=***AlarmGroup*]
[,**agne=***AGNE*][,**cort=***CO/RT*][,**idle=***IdleChannelSignal*];
(For FiberReach Release 4.0 and later)

DESCRIPTION

NOTE:
This command page describes the functionality of the **set-ne** command in FiberReach Release 3.0 and later FiberReach TARP releases.

This command sets the network element (NE) characteristics (parameters) of a DDM-2000.

NOTE:
If security is enabled on any CIT or DCC port on a shelf, then this command is available to privileged users only for all CIT or DCC ports on the shelf.

The input parameters are:

tid TID is a string of up to 20 characters, and may include upper- and lowercase letters, numbers, and the following characters: "-", "+", "%", "#", ".". Prior to the first use of this command, the initial value is **LT-DDM-2000**. The *TID* will be printed at the beginning of the output for all commands. For proper operation of TL1/X.25 OS interfaces, the *TID* must be unique for each NE.

NOTE 1:
Changing the TID (system name) does not change the network address, which is determined by the NSAP but does affect proper TL1 message reporting.

NOTE 2:
It is strongly recommended to change the default TIDs of all NEs in the subnetwork at systems startup.

CAUTION:
Changing the `TID` will cause all active TL1 logins to this NE to be dropped. New TL1 logins to this NE will have to be activated using the new TID value.

`rnestat` This parameter is valid starting with FiberReach Release 4.0. Remote NE Status (feature) can have a value of `enabled` or `disabled`. If this parameter has a value of `enabled`, the user will be prompted for **`almgrp`** and **`agne`**, as well as the other parameters; otherwise the user will not be prompted for **`almgrp`** and **`agne`**.

`almgrp` This parameter is valid starting with FiberReach Release 4.0. Alarm Group (AG) has a numeric value of `1` through `255`. All NEs in the subnetwork, whether nearby or not, that have the same AG number are members of the same group. All members of the AG will share NE Status information with each other but not with NEs of different alarm Groups. The default AG number for DDM-2000 is `255` and may not have to be changed if a single AG is desired.

`agne` This parameter is valid starting with FiberReach Release 4.0. AGNE (Alarm Gateway NE) has a value of `yes` or `no`, which indicates whether this system is an alarm gateway network element. The default value for this parameter is *no*. At least one AGNE is needed for each alarm group to support the message communications for NE Status features (FE activity, office alarms, miscellaneous discretes, local ACO and FE user panel status). Any member of the alarm group can be an AGNE but some may be preferred because of their position in the subnetwork or location near a maintenance center. Other NEs of the same alarm group may be provisioned as backup AGNEs if required. At least one NE in each alarm group must be designated as an **`agne`**. Network Elements without an AGNE can raise "AGNE communication failure" alarms (If the remote NE status feature is enabled).

`idle` IdleChannelSignal determines whether or not an AIS or Unequipped signal should be inserted toward the SONET line in VT1.5 and STS-1 channels that are not cross-connected. The value may be one of the following:

`ais` STS-1 or VT1.5 AIS is inserted towards the SONET line from SONET interfaces (OLIUs and STS1Es) if the channel is not cross-connected or if a low-speed slot is not equipped but the function unit is STS-1 cross-connected.

`unequipped` The STS-1 or VT1.5 Unequipped signal is inserted towards the SONET line from SONET interfaces (OLIUs and STS1Es) if the channel is not cross-connected or if

a low-speed slot is not equipped but the function unit is STS-1 cross-connected.

NOTE:
It is recommended that the user choose the `ais` option for this parameter, since all SONET equipment is capable of detecting and performing path protection switching when receiving a VT/STS AIS signal.

`cort` The CO/RT parameter for CO (Central Office) or RT (Remote Terminal) identifies the system as having characteristics of a CO or an RT. The values for CO/RT are `co` and `rt` with `rt` as the default value. The value of CO/RT controls the operation of the miscellaneous discretes, and the external fan control.

NOTE:
To optimize the performance of your network and simplify provisioning when the Remote NE Status fearture is enabled, it is stronly recommended that the following guidelines and rules are followed:

— If network partitioning is implemented, an Alarm Group should be restricted to a Level1 area (Multiple Alarm Groups are allowed within the same Level1 area).

— Multiple AGNEs can be defined in an Alarm Group.

— It is recommended to define a maximum of 2 AGNEs per Alarm Group.

— It is good practice to not define the same Alarm Group Id across different level1 areas.

Some of the command parameters are backed up on the main OLIU packs (tid, cort). Any attempt to provision any of these parameters with no main OLIU packs equipped will be denied with the following message:

```
SNVS
 /* Status, Not in Valid State */
 /* System must be equipped with at least one main OLIU circuit
    pack to provision selected parameters.  */
```

When this command is entered, the following confirmation message will be displayed:

```
/* Caution! Network Element access is affected by this command.

   You have selected the set-ne command with these parameters:

    TID = LT-DDM-2000
    IDLE = ais|unequipped
    idle = ais|unequipped

Execute? (y/n or CANcel/DELete to quit) =
```

Starting with FiberReach Release 4.0, when this command is entered and the `rnestat` feature is **`enabled`**, the following confirmation message will be displayed:

```
/* Caution! Network Element access is affected by this command.

   You have selected the set-ne command with these parameters:

    TID = LT-DDM-2000
    RneStat = enabled
    AlarmGroup = number
    AGNE = yes|no
    idleChannelSignal = ais|unequipped
    CO/RT = co|rt

Execute? (y/n or CANcel/DELete to quit) =
```

Changing the **`cort`** parameters will cause the network element to reset. Before these parameters are changed, the following caution message will be displayed prior to the confirmation message:

```
/* Caution!  Network Element access is affected by this command.

   Caution! When executed, this command causes the NE to
   restart the program.  This action will erase all of
   the performance monitoring data and the history file.
   If possible, it will reinitialize the date and time with
   the far end via the DCC.  Otherwise, the
   date and time will assume default values.
   You have selected the set-ne command with these parameters:
```

RELATED COMMANDS

reset

rlgn

rtrv-ne

rtrv-map-network

ent-ulsdcc-l3

ent-ulsdcc-l4

NAME

set-oc1: Set OC-1 Characteristics

INPUT FORMAT

set-oc1:*Address*[:**dgr=***SignalDegradeThreshold*]
[,**aisalm=***Alarm*];

DESCRIPTION

This command sets the characteristics (parameters) of a specified OC-1 line.

The input parameters are:

Address Address identifies the OC-1 line(s).

Valid OC-1 Addresses: **all, main-{1,2,all}**

dgr SignalDegradeThreshold specifies the signal degrade threshold as a BER in terms of a logarithm to the base 10. When this threshold is crossed, an alarm will be raised. The value of this parameter has a range of -9 to -5. The default value is -6.

> **NOTE:**
> The signal degrade value for both addresses of each OC-1 line pair *must* be the same. Therefore, any change to signal degrade for one address will automatically be made to the other by the software.

aisalm Alarm is the provisioned alarm level of the nonservice affecting (NSA) OC-1 line AIS and has the following values:

- **cr** Critical alarm
- **mj** Major alarm
- **mn** Minor alarm
- **na** Not alarmed, but reported (default).

When input, this command will cause the following confirmation request to be displayed (NonServiceAffecting AIS will be displayed for Release 2.1 and later):

```
/* Caution! Alarm or maint. thresholds and sync messages
   are affected by this command.
   You have selected the set-oc1 command with these parameters:

   Address = x
   SignalDegradeThreshold = -n

Execute? (y/n or CANcel/DELete to quit) =
```

RELATED COMMANDS

rtrv-oc1

NAME

set-oc3: Set OC-3 Characteristics

INPUT FORMAT

set-oc3::*Address*[:**dgr=***SignalDegradeThreshold*]
[,**syncmsg**=*SynchronizationMessaging][,***aisalm**=*Alarm];*
(FiberReach Release 3.1)

set-oc3:*Address*[:**dgr=***SignalDegradeThreshold*]
[,**syncmsg=***SynchronizationMessaging*][,**aisalm=***Alarm*][,**dcc=***DccMode*];
(FiberReach Release 4.0 and later)

DESCRIPTION

This command sets several characteristics (parameters) of a specified OC-3 line or line pair. This command requires the use of the 28G-U OLIU circuit packs in Main, and it is available in FiberReach Release 3.1, and later releases.

The input parameters are:

Address Address identifies the OC-3 line(s) or line pair(s).

If the shelf is equipped with 28-type OLIUs in Main unit slots (in FiberReach 3.1, and later), the valid addresses are:
main-{1,2,all},all

If the shelf is equipped with 22-type OLIUs in Function unit slots (in FiberReach 3.1 and later), the valid addresses are:
fn, all

dgr SignalDegradeThreshold specifies the signal degrade threshold as a BER in terms of a logarithm to the base 10. When this threshold is crossed, an alarm will be raised and automatic protection switching of the service line will be initiated. The value of this parameter has a range of -9 to -5. The default value is -6.
For ring releases, the signal degrade value for addresses of main-1 and main-2 *must* be the same. Therefore, any change to signal degrade for one address will automatically be made to the other by the software.

syncmsg This parameter is available in FiberReach Release 3.1 (when equipped with 28-type OLIU in the Main unit slots) and later (when equipped with 28/29-type OLIUs in the Main Unit slots).

NOTE:
In FiberReach Release 3.1 and later releases, there is no synchronization messaging of any type provisioned for the 22-type OLIU in the Function unit slots of the FiberReach shelf. Therefore, no data is provisioned for this parameter.

Synchronization messaging allows timing to be reconfigured in a network upon a node or fiber failure. This parameter has one of the following values:

`Kbyte` This is the default value. When this option is selected, both K2 and S1 byte sync messages are transmitted, but only K2 byte is received and interpreted for sync messaging.

`Sbyte` When this option is selected, only the S1 byte is sent and received for sync messaging. K2 byte will always send a "Don't Use" message.

NOTE:
To minimize the amount of time that DDM-2000 is in holdover mode when upgrading a ring network from **`Kbyte`** to **`Sbyte`** messages, it is recommended that the user first upgrade the nodes farthest away from the external timing source, and then proceed to nodes closer to the timing source.

`disabled` When this option is selected, interpretation of both K2 and S1 bytes will be disabled and hence a "Don't Use" message will be transmitted on both bytes at all times.

This parameter is not prompted for if the user enters a Main Address value.

`aisalm` Alarm is the provisioned alarm level of the NSA OC-3 line AIS and has the following values:

`cr` Critical alarm

`mj` Major alarm

`mn` Minor alarm

`na` Not alarmed, but reported (default).

`dcc` This parameter is only applicable to the Main OC-3 interface in R4.0 and later. DccMode is a parameter that configures an OC-3 ring interface to interwork with either a ring or 1+1 application. There are two valid values for this parameter, **`"distinct"`** (default) or **`"identical"`**. When configured for **`"distinct"`** a separate DCC data link (SONET embedded overhead channel) is assigned to each OC-3 line in the pair.

This is the configuration that supports ring interworking. To allow the OC-3 interface to interconnect to a 1+1 OC-3 interface at the far-end, the DccMode should be set to **`"identical"`**. In this

mode the transmit DCC bytes are copied or bridged on both OC-3 lines, and the K-bytes are configured for the 1+1 protection mode. In the receive direction only the DCC bytes from the active line are processed.

Assignment of this parameter always affects both OC-3 lines.

This parameter is not prompted for if the user enters a Function unit Address value.

If an attempt is made to execute this command, when a mix of incompatible OLIU packs exists in Main, the request will be denied with the following message:

```
SNVS
/* Status, Not in Valid State */
/* Both main slots must be equipped with compatible OLIU packs. */
```

When input, this command will cause the following confirmation request to be displayed:

```
/* Caution! Alarm or maint. thresholds and sync messages
   are affected by this command.
   You have selected the set-oc3 command with these parameters:

   Address = x
   SignalDegradeThreshold = -n
   NonServiceAffectingAIS= value

Execute? (y/n or CANcel/DELete to quit) =
```

Beginning with FiberReach Release 3.1 (when the shelf is equipped with 28-type OLIUs in Main unit slots), this command will cause the following confirmation request to be displayed:

```
/* Caution! Alarm or maint. thresholds and sync messages
   are affected by this command.
   You have selected the set-oc3 command with these parameters:

   Address = x
   SignalDegradeThreshold = -n
   SynchronizationMessaging = value
   NonServiceAffectingAIS= value */

Execute? (y/n or CANcel/DELete to quit) =
```

When this command is input in FiberReach Rlease 4.0 and later, the following confirmation request to be displayed:

```
/* Caution! Alarm or maint. thresholds and sync messages
   are affected by this command.
   You have selected the set-oc3 command with these parameters:

   Address = x
   SignalDegradeThreshold = -n
   SynchronizationMessaging = value
   NonServiceAffectingAIS= value
   DccMode = value */

Execute? (y/n or CANcel/DELete to quit) =
```

The **`DccMode`** parameter appears in R4.0 and later releases. The **`DccMode`** parameter confirmation only applies to Main slots.

RELATED COMMANDS

rtrv-oc3

rtrv-sync

NAME

set-oc12: Set OC-12 Characteristics

INPUT FORMAT

set-oc12:*Address*[:**dgr=***SignalDegrade*][,**syncmsg=***SynchronizationMessaging*] [,**aisalm=***Alarm*] [,**dcc=***DccMode*];

DESCRIPTION

This command sets the Signal Degrade (DGR) threshold, the line AIS alarm level and the Synch messaging status of the specified OC-12 line pair.

The input parameters are:

Address Address identifies the OC-12 line or line pair.

When the shelf is equipped with 29-type (starting with FiberReach Release 4.0) OLIU circuit packs in its Main unit slots, the valid Main unit addresses are:
main-{1,2,all},all

dgr SignalDegrade specifies the signal degrade threshold as a BER in terms of a logarithm to the base 10. The value of this parameter has a range of -5 to -9. The default value is -6. For ring releases, When using the 29-type OLIU circuit packs in the shelf's Main unit slots, the degrade values for main-1 and main-2 must be the same. Any change to one address will also be made automatically to the other by the software.

syncmsg Synchronization messaging allows timing to be reconfigured in a network upon a node or fiber failure. Parameter value is one of the following:

`Kbyte` This is the default value. When this option is selected, both K2 and S1 byte sync messages are transmitted, but only K2 byte is received and interpreted for sync messaging.

`Sbyte` When this option is selected, only the S1 byte is sent and received for sync messaging. K2 byte will always send a "Don't Use" message.

`disabled` When this option is selected, interpretation of both K2 and S1 bytes will be disabled and hence a "Don't Use" message will be transmitted on both bytes at all times.

`aisalm` For ring releases, the AIS alarm values for Main-1 and Main-2 (when using 29-type OLIU circuit packs in the Main unit slots) must be the same. Any change to one address will also be made automatically to the other by the software. Alarm is the provisioned alarm level of the non-service affecting (NSA) OC-12 line AIS and has the following values:

- `cr` Critical alarm
- `mj` Major alarm
- `mn` Minor alarm
- `na` Not alarmed, but reported (default)

`dcc` DccMode is a parameter that configures an OC-12 ring interface for interworking with either a ring or 1+1 application. There are two valid values for this parameter, **`"distinct"`** (default) or **`"identical"`**. When configured for **`"distinct"`** a separate DCC data link (SONET embedded overhead channel) is assigned to each OC-12 line in the pair. This is the configuration that supports ring interworking. To allow the OC-12 interface to interconnect to a 1+1 OC-12 interface at the far-end, the DccMode should be set to **`"identical"`**. In this mode the transmit DCC bytes are copied or bridged on both OC-12 lines, and the K-bytes are configured for the 1+1 protection mode. In the receive direction only the DCC bytes from the active line are processed. This parameter is only applicable to the Main OC-12 interface in R4.0 and later.

If an attempt is made to execute this command, when a mix of incompatible OLIU packs exists in Main, the request will be denied with the following message:

```
SNVS
/* Status, Not in Valid State */
/* Both main slots must be equipped with compatible OLIU packs. */
```

This command will cause the following confirmation request to be displayed:

```
/* Caution! Alarm or maint. thresholds are affected by this command.
    You have selected the set-oc12 command with these parameters:

      Address = x
      SignalDegradeThreshold = -n
      SynchronizationMessaging = x
      NonServiceAffectingAIS= value */
      DccMode = value

Execute? (y/n or CANcel/DELete to quit) =
```

The **`DccMode`** parameter appear in R4.0 and later releases.

RELATED COMMANDS

rtrv-oc12

rtrv-sync

NAME

set-passwd: Set Password

INPUT FORMAT

`set-passwd`;

DESCRIPTION

This command changes a user's password. All users can change their own passwords. Privileged users can change other users' passwords by using the **`set-lgn`** command.

Starting with FiberReach Release 4.0, this command is used also to change a user's password when his/her password expires.

The following screen shows the dialog to change a password. In the dialog, the user input is shown in bold type.

NOTE:
Passwords will not be displayed when they are entered.

```
   <set-passwd;

enter your old password = old_password
enter your new password = new_password
reenter your new password = new_password
;
```

There are no default values for the old and new passwords.

A valid password is a case-sensitive ASCII string containing a minimum of six and a maximum of ten characters. The password must also include at least two numeric characters and one symbolic (non-alphabetic and non-numeric) character. The following symbolic characters have special meanings either for the User Interface or for the x.25 TL1 interface and cannot be included in a password:

;	semicolon	*?*	question mark
@	at sign		space
:	colon	*=*	equal sign
"	double quote	*,*	comma
\	back slash	*!*	exclamation point

Additionally, the following control characters and special keys CANNOT be included in a password:

<CR>	carriage return	*<tab>*	tab key
<bksp>	backspace key	*<esc>*	escape key
<del>	delete key		

If the entered password value does not match the valid password definition (syntactically incorrect), the following message will be displayed:

```
/* Entry does not follow rules for passwords. */
/* Passwords must be 6 to 10 characters, with at least 2 non
   alphabetic characters and additionally, at least 1 symbolic.
   Characters allowed are:  A..Z or a..z, 0..9, all symbolic
   characters, EXCEPT the following:

         ;   semicolon        ?   question mark
         @   at sign              space
         :   colon            =   equal sign
         "   double quote     ,   comma
         \   back slash       !   exclamation point

*/

enter your new password:
```

The user may try once again to enter a password. If the user tries again to enter a password that does not match the valid password definition, the following denial message will be displayed:

```
IDEI
/* Input, Data Entry Invalid */
/* Entry does not follow rules for passwords and logins. */
```

If a user is changing a password and the password entered does not match the present valid password, it will be rejected and the user will be prompted to try again. The user is allowed only one retry. If the user attempts and fails a second time, the entry will be denied with the following message and the old password will remain in effect:

```
PIPW
/* Privilege, Illegal PassWord. */
/* The old password remains in effect. */
```

If the new password that a user enters when changing a password meets the password definition requirements (syntactically correct), but does not match on its two entries (`enter your new password`; `reenter your new password`), the following message will be displayed:

```
/* The first and second entries of new password did not match. */
```

The user may try once again to change the password. If the user fails a second time to match the two entries, the following denial message will be displayed and the old password will remain in effect:

```
IDNC
/* Input, Data Not Consistent */
/* First and second entries of new password did not match.
   The old password remains in effect. */
```

RELATED COMMANDS

rtrv-lgn

set-lgn

set-secu

NAME

set-pmthres-line: Set Performance Monitoring Threshold Line

INPUT FORMAT

`set-pmthres-line`:
[**QHB2CVOC12=***nnnnn*][,**DayB2CVOC12=***nnnnnn*]
[**QHB2CVOC3=***nnnnn*][,**DayB2CVOC3=***nnnnn*]
[,**QHB2CVOC1=***nnnnn*][,**DayB2CVOC1=***nnnnn*]
[,**QHB2ES=***nnn*][,**DayB2ES=***nnnnn*]
[,**QHB2ESA=***nnn*][,**DayB2ESA=***nnnnn*]
[,**QHB2ESB=***nnn*][,**DayB2ESB=***nnnnn*]
[,**QHB2SES=***nnn*][,**DayB2SES=***nnnnn*]
[,**QHB2UAS=***nnn*][,**DayB2UAS=***nnnnn*];

where *nnn....* is a numerical value in the range given in the following parameter descriptions.

NOTE:
Parameters are shown in uppercase letters for readability. Parameters may be entered in either upper- or lowercase letters.

DESCRIPTION

This command sets the performance parameter thresholds of:

- OC-1 lines, if the shelf is equipped with 26-type OLIUs in Main unit slots
- OC-3 lines (in FiberReach Release 3.1, and later), if the shelf is equipped with 28-type OLIUs in Main unit slots and 22-type OLIUs in the Function unit slots (in Release 3.1 and later).
- OC-12 lines, when the shelf is equipped with 29-type OLIUs in Main unit slots (in Release 4.0 and later)

This command activates and deactivates the processing of threshold crossings for performance parameters.

Entering a value of zero (0) for a parameter will disable thresholding for that parameter.

The input parameters are:

QHB2CVOC12 This parameter sets the threshold for the OC-12 coding violations count on a quarter-hourly basis. This parameter has a range of -10 through -7, corresponding to BERs of 10^{-10} through 10^{-7}, and an integer range of 0 through 55365. The default value is 5537. A negative value of this parameter indicates that the parity count threshold is specified in terms of an equivalent BER expressed as a logarithm to the base 10.

DayB2CVOC12 A positive value of this parameter sets the threshold for the OC-12 coding violation count on a daily basis. This parameter has a range of -10 through -7, corresponding to BERs of 10^{-10} through 10^{-7}, and an integer range of 0 through 5315040. The default value is 531504. A negative value of this parameter sets the parity count threshold in terms of an equivalent BER expressed as a logarithm to the base 10.

QHB2CVOC3 This parameter is available in FiberReach Release 3.1 and later releases. This parameter sets the threshold for the OC-3 coding violations count on a quarter-hourly basis. This parameter has a range of -10 through -7, corresponding to BERs of 10^{-10} through 10^{-7}, and an integer range of 0 through 13841. The default value is 1384. A negative value of this parameter indicates that the parity count threshold is specified in terms of an equivalent BER expressed as a logarithm to the base 10.

DayB2CVOC3 This parameter is available in FiberReach Release 3.1 and later releases A positive value of this parameter sets the threshold for the OC-3 coding violation count on a daily basis. This parameter has a range of -10 through -7, corresponding to BERs of 10^{-10} through 10^{-7}, and an integer range of 0 through 1328736. The default value is 132874. A negative value of this parameter sets the parity count threshold in terms of an equivalent BER expressed as a logarithm to the base 10.

QHB2CVOC1 This parameter sets the threshold for the OC-1 coding violations count on a quarter-hourly basis. This parameter has a range of -10 through -7, corresponding to BERs of 10^{-10} through 10^{-7}, and an integer range of 0 through 4613. The default value is 461. A negative value of this parameter indicates that the parity count threshold is specified in terms of an equivalent BER expressed as a logarithm to the base 10.

DayB2CVOC1 A positive value of this parameter sets the threshold for the OC-1 coding violation count on a daily basis. This parameter has a range of -10 through -7, corresponding to BERs of 10^{-10} through 10^{-7}, and an integer range of 0 through 442848. The default value is 44285. A negative value of this parameter sets the parity count threshold in terms of an equivalent BER expressed as a logarithm to the base 10.

QHB2ES This parameter sets the threshold for the ES type A count on a quarter-hourly basis. This parameter is an integer with range 0 through 900 and a default value of 40.

DayB2ES This parameter sets the threshold for the ES type A count on a daily basis. This parameter is an integer with range 0 through 65535 and default value of 900.

QHB2ESA This parameter sets the threshold for the ES type A count on a quarter-hourly basis. This parameter is an integer with range 0 through 900 and default value of 30.

DayB2ESA This parameter sets the threshold for the ES type A count on a daily basis. This parameter is an integer with range 0 through 65535 and default value of 90.

QHB2ESB This parameter sets the threshold for the ES type B count on a quarter-hourly basis. This parameter is an integer with range 0 through 900 and default value of 30.

DayB2ESB This parameter sets the threshold for the ES type B count on a daily basis. This parameter is an integer with range 0 through 65535 and default value of 90.

QHB2SES This parameter sets the threshold for the SES count on a quarter-hourly basis. This parameter is an integer with range 0 through 63 and default value of 20.

DayB2SES This parameter sets the threshold for the SES count on a daily basis. This parameter is an integer with range 0 through 4095 and default value of 60.

QHB2UAS This parameter sets the threshold for the UAS count on a quarter-hourly basis. This parameter is an integer with range 0 through 63 and default value of 30.

DayB2UAS This parameter sets the threshold for the UAS count on a daily basis. This parameter is an integer with range 0 through 4095 and default value of 90.

The following tables show the error counts equivalent to different BER thresholds for OC-1, OC-3 (available in Release 3.1 and later) and OC-12 (Release 4.0).

B2 OC12 Line Errors

BER Threshold	Equivalent 15 Min. Threshold (QHB2CVOC12)	Equivalent Day Threshold (DayB2CVOC12)
-7	55364	5315052
-8	5537	531505
-9	554	53151
-10	55	5315

B2 OC3 Line Errors

BER Threshold	Equivalent 15 Min. Threshold (QHB2CVOC3)	Equivalent Day Threshold (DayB2CVOC3)
-7	13841	1328736
-8	1384	132874
-9	138	13287
-10	14	1329

B2 OC1 Line Errors

BER Threshold	Equivalent 15 Min. Threshold (QHB2CVOC1)	Equivalent Day Threshold (DayB2CVOC1)
-7	4613	442848
-8	461	44285
-9	46	4428
-10	5	443

RELATED COMMANDS

init-pm

rtrv-pm-line

rtrv-pm-tca

rtrv-pmthres-line

set-pmthres-sect

NAME

set-pmthres-sect: Set Performance Monitoring Threshold Section

INPUT FORMAT

`set-pmthres-sect`:[**`Qhsefs=`***nn*][,**`Daysefs=`***nnnn*];

DESCRIPTION

This command sets the performance-monitoring thresholds of an OC-1 and OC-3 (available in Release 3.1 and later releases) sections, as well as activating and deactivating the processing of threshold crossings for performance parameters.

The input parameters are:

`Qhsefs` This parameter sets the threshold for SEFS on a quarter-hourly basis. This parameter is an integer with range of 0 through 63 and default value of 10. Entering a parameter value of zero (0) will disable thresholding for this parameter.

`Daysefs` This parameter sets the threshold for SEFS on a daily basis. This parameter is an integer with range of 0 through 4095 and a default value of 30. Entering a parameter value of zero (0) will disable thresholding for this parameter.

RELATED COMMANDS

init-pm

rtrv-pm-sect

rtrv-pm-tca

rtrv-pmthres-sect

NAME

set-pmthres-sts1: Set Performance Monitoring Threshold STS-1

INPUT FORMAT

`set-pmthres-sts1`:[**`QHB3CV=`***nnnn*][,**`DayB3CV=`***nnnnnn*][,**`QHB3ES=`***nnn*] [,**`DayB3ES=`***nnnnn*][,**`QHB3ESA=`***nnn*][,**`DayB3ESA=`***nnnnn*][,**`QHB3ESB=`***nnn*] [,**`DayB3ESB=`***nnnnn*][,**`QHB3SES=`***nn*][,**`DayB3SES=`***nnnn*][,**`QHB3UAS=`***nn*] [,**`DayB3UAS=`***nnnn*];

where *`nnn...`* is the numerical value given in the following parameter descriptions.

NOTE:
Parameters are shown in upper-case letters for readability. Parameters may be entered in either upper- or lower-case letters.

DESCRIPTION

This command provisions STS-1 path performance parameter thresholds as well as enabling and disabling the processing of threshold crossings for the various parameters. Entering a parameter value of zero (0) will disable thresholding for that parameter.

The input parameters are:

`QHB3CV` This parameter sets the threshold for the coding violations count on a quarter-hourly basis. A negative value of this parameter indicates that the parity count threshold is specified in terms of an equivalent BER expressed as a logarithm to the base 10. This parameter has a range of -10 through -7, corresponding to BERs of 10^{-10} through 10^{-7}, and an integer range of 0 through 4510. The default value is 451.

`DayB3CV` This parameter sets the threshold for the coding violations count on a daily basis. A negative value of this parameter indicates that the parity count threshold is specified in terms of an equivalent BER expressed as a logarithm to the base 10. This parameter has a range of -10 through -7, corresponding to BERs of 10^{-10} through 10^{-7}, and an integer range of 0 through 432960. The default value is 43296.

`QHB3ES` This parameter sets the threshold for errored seconds on a quarter-hourly basis. This parameter has an integer range of 0 through 900 and a default value of 40.

`DayB3ES` This parameter sets the threshold for errored seconds on a daily basis. This parameter has an integer range of 0 through 65535 and a default value of 900.

QHB3ESA This parameter sets the threshold for type A errored seconds on a quarter-hourly basis. A type A ES is a second with a single error. This parameter has an integer range of 0 through 900 and a default value of 30.

DayB3ESA This parameter sets the threshold for type A errored seconds on a daily basis. A type A ES is a second with a single error. This parameter has an integer range of 0 through 65535 and a default value of 90.

QHB3ESB This parameter sets the threshold for type B errored seconds on a quarter-hourly basis. A type B ES is a second with more than one error, but less than the number of errors in a severely errored second. This parameter has an integer range of 0 through 900 and a default value of 30.

DayB3ESB This parameter sets the threshold for type B errored seconds on a daily basis. A type B ES is a second with more than one error, but less than the number of errors in a severely errored second. This parameter has an integer range of 0 through 65535 and a default value of 90.

QHB3SES This parameter sets the threshold for the severely errored frame seconds count on a quarter-hourly basis. This parameter has an integer range of 0 through 63 and a default value of 20.

DayB3SES This parameter sets the threshold for the severely errored frame seconds count on a daily basis. This parameter has an integer range of 0 through 4095 and a default value of 60.

QHB3UAS This parameter sets the threshold for unavailable seconds on a quarter-hourly basis. This parameter has an integer range of 0 through 63 and a default value of 30.

DayB3UAS This parameter sets the threshold for unavailable seconds on a daily basis. This parameter has an integer range of 0 through 4095 and a default value of 90.

The following table shows the error counts equivalent to different BER thresholds.

B3 STS-1 Path Errors

BER Threshold	Equivalent 15 Min. Threshold (QHB3CV)	Equivalent Day Threshold (DayB3CV)
-7	4510	432960
-8	451	43296
-9	45	4330
-10	5	433

RELATED COMMANDS

init-pm

rtrv-pmthres-sts1

rtrv-pm-sts1

rtrv-pm-tca

NAME

set-pmthres-t1: Set Performance Monitoring Threshold T1

INPUT FORMAT

`set-pmthres-t1`:[**`QHESL=`***nnn*][**`DayESL=`***nnnnn*][,**`QHCVPSF=`***nnnnn*][,**`DayCVPSF=`***nnnnnnn*]
[,**`QHCVPESF=`***nnnnn*][,**`DayCVPESF=`***nnnnnnn*][,**`QHESP=`***nnn*][**`DayESP=`***nnnnn*]
[,**`QHSESP=`***nn*][,**`DaySESP=`***nnnn*][,**`QHUASP=`***nn*][,**`DayUASP=`***nnnn*]
[,**`QHCVPFE=`***nnnnn*][,**`DayCVPFE=`***nnnnnnn*][,**`QHESPFE=`***nnn*][,**`DayESPFE=`***nnnnn*]
[,**`QHSESPFE=`***nn*][,**`DaySESPFE=`***nnnn*][,**`QHUASPFE=`***nn*][,**`DayUASPFE=`***nnnn*]

where *nnn....* is a numerical value in the range given in the following parameter descriptions.

NOTE:
Parameters are shown in upper-case letters for readability. Parameters may be entered in either upper- or lower-case letters.

DESCRIPTION

This command sets DS1 path and line performance monitoring thresholds, and is available with the BBF3/BBF3B circuit pack. This command also enables and disables the processing of threshold crossing alerts (TCAs) for these parameters.

This command may only be used if the `ds1pm` feature is enabled via the **`set-feat`** command.

Entering a value of zero (0) for a parameter will disable thresholding for that parameter.

A negative integer threshold value indicates that the threshold is specified in terms of an equivalent Bit Error Ratio (BER) of 10^{n}.

The input parameters are:

`QHESL` This parameter sets the threshold for the errored second line (ESL) count on a quarter-hourly basis. This parameter is an integer with a range of 0 through 900 and a default value of 65.

`DayESL` This parameter sets the threshold for the errored second line (ESL) count on a daily basis. This parameter is an integer with a range of 0 through 65535 and a default value of 648.

`QHCVPSF` This parameter sets the threshold for the code violations path SF (CVPSF) count on a quarter-hourly basis. A negative value of this parameter indicates that the code violation count threshold is specified in terms of an equivalent BER expressed as a logarithm to the base 10. This parameter has a range of -7 through -5, corresponding to BERs of 10^{-7} through 10^{-5}, and an integer range of 0 through 16383. The default value is 72.

DayCVPSF This parameter sets the threshold for the code violations path SF (CVPSF) count on a daily basis. A negative value of this parameter indicates that the code violation count threshold is specified in terms of an equivalent BER expressed as a logarithm to the base 10. This parameter has a range of -8 through -5, corresponding to BERs of 10^{-8} through 10^{-5}, and an integer range of 0 through 1048575. The default value is 691.

QHCVPESF This parameter sets the threshold for the code violations path ESF (CVPESF) count on a quarter-hourly basis. A negative value of this parameter indicates that the code violation count threshold is specified in terms of an equivalent BER expressed as a logarithm to the base 10. This parameter has a range of -8 through -5, corresponding to BERs of 10^{-8} through 10^{-5}, and an integer range of 0 through 16383. The default value is 13296.

DayCVPESF This parameter sets the threshold for the code violations path ESF (CVPESF) count on a daily basis. A negative value of this parameter indicates that the code violation count threshold is specified in terms of an equivalent BER expressed as a logarithm to the base 10. This parameter has a range of -8 through -5, corresponding to BERs of 10^{-8} through 10^{-5}, and an integer range of 0 through 1048575. The default value is 132960.

QHESP This parameter sets the threshold for the errored second path (ESP) count on a quarter-hourly basis. This parameter is an integer with a range of 0 through 900 and a default value of 65.

DayESP This parameter sets the threshold for the errored second path (ESP) count on a daily basis. This parameter is an integer with a range of 0 through 65535 and a default value of 648.

QHSESP This parameter sets the threshold for the severely errored second path (SESP) count on a quarter-hourly basis. This parameter is an integer with a range of 0 through 63 and a default value of 10.

DaySESP This parameter sets the threshold for the severely errored second path (SESP) count on a daily basis. This parameter is an integer with a range of 0 through 4095 and a default value of 100.

QHUASP This parameter sets the threshold for the unavailable second path (UASP) count on a quarter-hourly basis. This parameter is an integer with a range of 0 through 63 and a default value of 10.

DayUASP This parameter sets the threshold for the unavailable second path (UASP) count on a daily basis. This parameter is an integer with a range of 0 through 4095 and a default value of 10.

QHCVPFE This parameter sets the threshold for the code violations path far-end (CVPFE) count on a quarter-hourly basis. A negative value of this parameter indicates that the code violation count threshold is specified in terms of an equivalent BER expressed as a logarithm to the base 10. This parameter has a range of -8 through -5, corresponding to BERs of 10^{-8} through 10^{-5}, and an integer range of 0 through 16383. The default value is 13296.

DayCVPFE This parameter sets the threshold for the code violations path far-end (CVPFE) count on a daily basis. A negative value of this parameter indicates that the code violation count threshold is specified in terms of an equivalent BER expressed as a logarithm to the base 10. This parameter has a range of -8 through -5, corresponding to BERs of 10^{-8} through 10^{-5}, and an integer range of 0 through 1048575. The default value is 132960.

QHESPFE This parameter sets the threshold for the errored second path far-end (ESPFE) count on a quarter-hourly basis. This parameter is an integer with a range of 0 through 900 and a default value of 65.

DayESPFE This parameter sets the threshold for the errored second path far-end (ESPFE) count on a daily basis. This parameter is an integer with a range of 0 through 65535 and a default value of 648.

QHSESPFE This parameter sets the threshold for the severely errored second path far-end (SESPFE) count on a quarter-hourly basis. This parameter is an integer with a range of 0 through 63 and a default value of 10.

DaySESPFE This parameter sets the threshold for the severely errored second path far-end (SESPFE) count on a daily basis. This parameter is an integer with a range of 0 through 4095 and a default value of 100.

QHUASPFE This parameter sets the threshold for the unavailable second path far-end (UASPFE) count on a quarter-hourly basis. This parameter is an integer with a range of 0 through 63 and a default value of 10.

DayUASPFE This parameter sets the threshold for the unavailable second path far-end (UASPFE) count on a daily basis. This parameter is an integer with a range of 0 through 4095 and a default value of 10.

The following tables show the error counts equivalent to different BER thresholds.

DS1 Coding Violations-Path (SF)

BER Threshold	Equivalent 15 Min. Threshold (**QHCVP**)	Equivalent Day Threshold (**DayCVP**)
-5	72	6912
-6	7	691
-7	1	69
-8	--	7

DS1 Coding Violations-Path (ESF)

BER Threshold	Equivalent 15 Min. Threshold (**QHCVP**)	Equivalent Day Threshold (**DayCVP**)
-5	13842	1328832
-6	1384	132883
-7	138	13288
-8	14	1329

This command may only be used if the `ds1pm` feature is enabled via the **`set-feat`** command. If this feature is not enabled, the following denial message will be displayed:

```
SSTP
/* Status, execution SToPped */
/* Command not available, feature disabled */
```

If this command is entered on a DDM-2000 loaded with a release of software that does not currently support this feature, the following denial message will be displayed:

```
SSTP
/* Status, execution SToPped */
/* Command not available in this release */
```

RELATED COMMANDS

rtrv-feat

rtrv-pmthres-t1

set-feat

NAME

set-pmthres-t3: Set Performance Monitoring Threshold T3

INPUT FORMAT

set-pmthres-t3:[**QHCVL=***nnnnn*][,**DayCVL=***nnnnnnn*][,**QHESL=***nnn*]
[,**DayESL=***nnnnn*][,**QHSESL=***nn*][,**DaySESL=***nnnn*][,**QHSEFS=***nn*]
[,**DaySEFS=***nnnn*][,**QHPCV=***nnnnn*][,**DayPCV=***nnnnnnn*]
[,**QHFMCV=***nnnnn*][,**DayFMCV=***nnnnnnn*][,**QHCP=***nnnnn*][,**DayCP=***nnnnnnn*]
[,**QHESP=***nnn*][,**DayESP=***nnnnn*][,**QHSESP=***nn*][,**DaySESP=***nnnn*]
[,**QHUASP=***nn*][,**DayUASP=***nnnn*][,**QHSEFSFE=***nn*][,**DaySEFSFE=***nnnn*]
[,**QHCPFE=***nnnnn*][,**DayCPFE=***nnnnnnn*][,**QHESPFE=***nnn*][,**DayESPFE=***nnnnn*]
[,**QHSESPFE=***nn*][,**DaySESPFE=***nnnn*][,**QHUASPFE=***nn*][,**DayUASPFE=***nnnn*];

where *nnn....* is a numerical value in the range given in the parameter description listed below.

NOTE:
Parameters are shown in upper-case letters for readability. Parameters may be entered in either upper- or lower-case letters.

DESCRIPTION

This command sets the performance parameter thresholds of a DS3 signal as well as activating and deactivating the processing of threshold crossings for error performance parameters. Entering a value of zero (0) for a parameter will disable thresholding for that parameter.

Starting with FiberReach Release 3.1, this command is allowed ONLY if the shelf is equipped with 28-type OLIUs in Main and DS3 circuit packs in the Function unit slots.

In FiberReach Release 4.0, this command is allowed also if the shelf is equipped with 26/29-type OLIUs in Main and DS3 circuit packs in the Function unit slots.

NOTE:
All DS3 line parameters (in addition to DS3 C-bit parity and all other path parameters for the incoming signal from the DSX-3) are only applicable when a BBG4/BBG4B or BBG19 (in Release 3.1 and later) pack is active (in-service) in a function unit slot.

The input parameters are:

QHCVL This parameter sets the threshold for the coding violations count on a quarter-hourly basis for the DS3 line B3ZS data. A negative value for this parameter indicates that the threshold is specified in terms of an equivalent BER expressed as a logarithm to the base 10. This parameter has a range of -10 through -7, corresponding

to BERs of 10^{-10} through 10^{-7}, and an integer range of 0 through 16383. The default value is 40.

DayCVL This parameter sets the threshold for the coding violations count on a daily basis for the DS3 line B3ZS data. A negative value for this parameter indicates that the threshold is specified in terms of an equivalent BER expressed as a logarithm to the base 10. This parameter has a range of -10 through -7, corresponding to BERs of 10^{-10} through 10^{-7}, and an integer range of 0 through 1048575. The default value is 3865.

QHESL This parameter sets the threshold for the errored seconds count on a quarter-hourly basis for the DS3 line with at least one B3ZS coding violation. This parameter has an integer range of 0 through 900 with a default value of 25.

DayESL This parameter sets the threshold for the errored seconds count on a daily basis for the DS3 line with at least one B3ZS coding violation. This parameter has an integer range of 0 through 65535 with a default value of 250.

QHSESL This parameter sets the threshold for the severely errored seconds count on a quarter-hourly basis for the DS3 line with greater than 44 B3ZS coding violations. This parameter has an integer range of 0 through 63 with a default value of 4.

DaySESL This parameter sets the threshold for the severely errored seconds count on a daily basis for the DS3 line with greater than 44 B3ZS coding violations. This parameter has an integer range of 0 through 4095 with a default value of 40.

QHSEFS This parameter sets the threshold for the severely errored frame seconds count on a quarter-hourly basis. This is a path parameter that applies to the incoming DS3 signal from both the DSX-3 and the fiber. This parameter has an integer range of 0 through 63 with a default value of 2.

DaySEFS This parameter sets the threshold for the severely errored frame seconds count on a daily basis. This is a path parameter that applies to the incoming DS3 signal from both the DSX-3 and the fiber. This parameter has an integer range of 0 through 4095 with a default value of 8.

QHPCV This parameter sets the threshold for the coding violations count on a quarter-hourly basis for the **pbit** type of format. The type is selected using the **set-t3** command. This is a path parameter that applies to the incoming DS3 signal from both the DSX-3 and the fiber. A negative value of this parameter indicates that the parity count threshold is specified in terms of an equivalent BER expressed as a logarithm to the base 10. This parameter has a range of -10 through -7, corresponding to BERs of 10^{-10} through 10^{-7}, and an integer range of 0 through 16383. The default value is 40.

DayPCV This parameter sets the threshold for the coding violations count on a daily basis for the **pbit** type of format. The type is selected using the **set-t3** command. This is a path parameter that applies to the incoming DS3 signal from both the DSX-3 and the fiber. A negative value of this parameter indicates that the parity count threshold is specified in terms of an equivalent BER expressed as a logarithm to the base 10. This parameter has a range of -10 through -7, corresponding to BERs of 10^{-10} through 10^{-7}, and an integer range of 0 through 1048575. The default value is 3820.

QHFMCV This parameter sets the threshold for the coding violations count on a quarter-hourly basis for the **fmbit** type of format. The type is selected using the **set-t3** command. This is a path parameter that applies to the incoming DS3 signal from both the DSX-3 and the fiber. A negative value of this parameter indicates that the parity count threshold is specified in terms of an equivalent BER expressed as a logarithm to the base 10. This parameter has a range of -10 through -7, corresponding to BERs of 10^{-10} through 10^{-7}, and an integer range of 0 through 16383. The default value is 40.

DayFMCV This parameter sets the threshold for the coding violations count on a daily basis for the **fmbit** type of format. The type is selected using the **set-t3** command. This is a path parameter that applies to the incoming DS3 signal from both the DSX-3 and the fiber. A negative value of this parameter indicates that the parity count threshold is specified in terms of an equivalent BER expressed as a logarithm to the base 10. This parameter has a range of -10 through -7, corresponding to BERs of 10^{-10} through 10^{-7}, and an integer range of 0 through 1048575. The default value is 3820.

QHCP This parameter sets the threshold for the coding violations count on a quarter-hourly basis for the near-end **cpbit** type of format. The type is selected using the **set-t3** command. This is a path parameter that applies to the incoming DS3 signal from both the DSX-3 and the fiber. A negative value of this parameter indicates that the parity count threshold is specified in terms of an equivalent BER expressed as a logarithm to the base 10. This parameter has a range of -10 through -7, corresponding to BERs of 10^{-10} through 10^{-7}, and an integer range of 0 through 16383. The default value is 40.

DayCP This parameter sets the threshold for the coding violations count on a daily basis for the near-end **cpbit** type of format. The type is selected using the **set-t3** command. This is a path parameter that applies to the incoming DS3 signal from both the DSX-3 and the fiber. A negative value of this parameter indicates that the parity count threshold is specified in terms of an equivalent BER expressed as a logarithm to the base 10. This

parameter has a range of -10 through -7, corresponding to BERs of 10^{-10} through 10^{-7}, and an integer range of 0 through 1048575. The default value is 3820.

QHESP This parameter sets the threshold for the errored seconds count on a quarter-hourly basis for **pbit**, **fmbit**, and **cpbit** type of formats. The type is selected using the **set-t3** command. This is a path parameter that applies to the incoming DS3 signal from both the DSX-3 and the fiber. This parameter has an integer range of 0 through 900, with a default value of 25.

DayESP This parameter sets the threshold for the errored seconds count on a daily basis for **pbit**, **fmbit**, and **cpbit** type of formats. The type is selected using the **set-t3** command. This is a path parameter that applies to the incoming DS3 signal from both the DSX-3 and the fiber. This parameter has an integer range of 0 through 65535 with a default value of 250.

QHSESP This parameter sets the threshold for the severely errored seconds count on a quarter-hourly basis for **pbit**, **fmbit**, and **cpbit** type of formats. The type is selected using the **set-t3** command. This is a path parameter that applies to the incoming DS3 signal from both the DSX-3 and the fiber. This parameter has an integer range of 0 through 63 with a default value of 4.

DaySESP This parameter sets the threshold for the severely errored seconds count on a daily basis for **pbit**, **fmbit**, and **cpbit** type of formats. The type is selected using the **set-t3** command. This is a path parameter that applies to the incoming DS3 signal from both the DSX-3 and the fiber. This parameter has an integer range of 0 through 4095, with a default value of 40.

QHUASP This parameter sets the threshold for the unavailable seconds count on a quarter-hourly basis for **pbit**, **fmbit**, and **cpbit** type of formats. The type is selected using the **set-t3** command. This is a path parameter that applies to the incoming DS3 signal from both the DSX-3 and the fiber. This parameter has an integer range of 0 through 63 with a default value of 10.

DayUASP This parameter sets the threshold for the unavailable seconds count on a daily basis for **pbit**, **fmbit**, and **cpbit** type of formats. The type is selected using the **set-t3** command. This is a path parameter that applies to the incoming DS3 signal from both the DSX-3 and the fiber. This parameter has an integer range of 0 through 4095 with a default value of 10.

QHSEFSFE This parameter sets the threshold for the severely errored frame seconds count on a quarter-hourly basis for the far-end **cpbit** type of format. The type is selected using the **set-t3** command. This parameter is monitored by reading the received X-bits in the DS3 C-bit parity frame. This is a path parameter that applies to the incoming DS3 signal from both the DSX-3 and the fiber. This parameter has an integer range of 0 through 63 with a default value of 2.

DaySEFSFE This parameter sets the threshold for the severely errored frame seconds count on a daily basis for the far-end **cpbit** type of format. The type is selected using the **set-t3** command. This parameter is monitored by reading the received X-bits in the DS3 C-bit parity frame. This is a path parameter that applies to the incoming DS3 signal from both the DSX-3 and the fiber. This parameter has an integer range of 0 through 4095, with a default value of 8.

QHCPFE This parameter sets the threshold for the coding violations count on a quarter-hourly basis for the far-end **cpbit** type of format. The type is selected using the **set-t3** command. This is a path parameter that applies to the incoming DS3 signal from both the DSX-3 and the fiber. A negative value of this parameter indicates that the parity count threshold is specified in terms of an equivalent BER expressed as a logarithm to the base 10. This parameter has a range of -10 through -7, corresponding to BERs of 10^{-10} through 10^{-7}, and an integer range of 0 through 16383. The default value is 40.

DayCPFE This parameter sets the threshold for the coding violations count on a daily basis for the far-end **cpbit** type of format. The type is selected using the **set-t3** command. This is a path parameter that applies to the incoming DS3 signal from both the DSX-3 and the fiber. A negative value of this parameter indicates that the parity count threshold is specified in terms of an equivalent BER expressed as a logarithm to the base 10. This parameter has a range of -10 through -7, corresponding to BERs of 10^{-10} through 10^{-7}, and an integer range of 0 through 1048575. The default value is 3820.

QHESPFE This parameter sets the threshold for the errored seconds count on a quarter-hourly basis for the far-end **cpbit** type of format. The type is selected using the **set-t3** command. This is a path parameter that applies to the incoming DS3 signal from both the DSX-3 and the fiber. This parameter has an integer range of 0 through 900 with a default value of 25.

DayESPFE This parameter sets the threshold for the errored seconds count on a daily basis for the far-end **cpbit** type of format. The type is selected using the **set-t3** command. This is a path parameter that applies to the incoming DS3 signal from both the DSX-3 and

the fiber. This parameter has an integer range of 0 through 65535 with a default value of 250.

QHSESPFE This parameter sets the threshold for the severely errored seconds count on a quarter-hourly basis for the far-end **cpbit** type of format. The type is selected using the **set-t3** command. This is a path parameter that applies to the incoming DS3 signal from both the DSX-3 and the fiber. This parameter has an integer range of 0 through 63 with a default value of 4.

DaySESPFE This parameter sets the threshold for the severely errored seconds count on a daily basis for the far-end **cpbit** type of format. The type is selected using the **set-t3** command. This is a path parameter that applies to the incoming DS3 signal from both the DSX-3 and the fiber. This parameter has an integer range of 0 through 4095 with a default value of 40.

QHUASPFE This parameter sets the threshold for the unavailable seconds count on a quarter-hourly basis for the far-end **cpbit** type of format. The type is selected using the **set-t3** command. This is a path parameter that applies to the incoming DS3 signal from both the DSX-3 and the fiber. This parameter has an integer range of 0 through 63 with a default value of 10.

DayUASPFE This parameter sets the threshold for the unavailable seconds count on a daily basis for the far-end **cpbit** type of format. The type is selected using the **set-t3** command. This is a path parameter that applies to the incoming DS3 signal from both the DSX-3 and the fiber. This parameter has an integer range of 0 through 4095 with a default value of 10.

The following tables show the error counts equivalent to different BER thresholds.

DS3 P-bit, F&M bit, and C-bit Coding Violations

BER Threshold	Equivalent 15 Min. Threshold (**QHCV**)	Equivalent Day Threshold (**DayCV**)
-7	3979	381972
-8	398	38197
-9	40	3820
-10	4	382

DS3 Line Coding Violations

BER Threshold	Equivalent 15 Min. Threshold (**QHCVL**)	Equivalent Day Threshold (**DayCVL**)
-7	4026	386519
-8	402	38651
-9	40	3865
-10	4	386

RELATED COMMANDS

init-pm

rtrv-pm-t3

rtrv-pm-tca

rtrv-pmthres-t3

set-t3

NAME

set-pmthres-vt1: Set Performance Monitoring Threshold VT1.5

INPUT FORMAT

`set-pmthres-vt1`:[**`QHV5ES=`***nnnnn*][,**`DayV5ES=`***nnnnnnn*][,**`QHV5SES=`***nnn*] [,**`DayV5SES=`***nnnnn*][,**`QHV5UAS=`***nnn*][,**`DayV5UAS=`***nnnnn*];

where *`nnn....`* is a numerical value in the range given in the following parameter descriptions.

NOTE:
Parameters are shown in upper-case letters for readability. Parameters may be entered in either upper- or lower-case letters.

DESCRIPTION

This command sets VT1.5 path performance monitoring thresholds. This command also enables and disables the processing of threshold crossing alerts (TCAs) for these parameters.

This command may only be used if the `vtpm` feature is enabled via the **`set-feat`** command. Entering a value of zero (0) for a parameter will disable thresholding for that parameter.

The input parameters are:

`QHV5ES` This parameter sets the threshold for the errored second (ES) count on a quarter-hourly basis. This parameter is an integer with a range of 0 through 900 and a default value of 40.

`DayV5ES` This parameter sets the threshold for the errored second (ES) count on a daily basis. This parameter is an integer with a range of 0 through 65535 and a default value of 900.

`QHV5SES` This parameter sets the threshold for the severely errored second (SES) count on a quarter-hourly basis. This parameter is an integer with a range of 0 through 63 and a default value of 20.

`DayV5SES` This parameter sets the threshold for the severely errored second (SES) count on a daily basis. This parameter is an integer with a range of 0 through 4095 and a default value of 60.

QHV5UAS This parameter sets the threshold for the unavailable second (UAS) count on a quarter-hourly basis. This parameter is an integer with a range of 0 through 63 and a default value of 30.

DayV5UAS This parameter sets the threshold for the unavailable second (UAS) count on a daily basis. This parameter is an integer with a range of 0 through 4095 and a default value of 90.

This command may only be used if the `vtpm` feature is enabled via the **`set-feat`** command. If this feature is not enabled, the following denial message will be displayed:

```
SSTP
/* Status, execution SToPped */
/* Command not available, feature disabled */
```

If this command is entered on a DDM-2000 loaded with a release of software that does not currently support this feature, the following denial message will be displayed:

```
SSTP
/* Status, execution SToPped */
/* Command not available in this release */
```

RELATED COMMANDS

rtrv-feat

rtrv-pmthres-vt1

set-feat

NAME

set-secu: Set Security

INPUT FORMAT

set-secu:*Address*[:[**sec=***Security*][,**to=***Timeout*]};

set-secu:*Address*[:[**porttype=***Porttype*][,**baudrate=***Baudrate*]
[,**echo**=*echo*][,**sec=***Security*][,**to=***Timeout*]];

DESCRIPTION

This command configures network element (NE) system security on each CIT and DCC interface. Starting with FiberReach Release 4.0, this command will also allow the user to receive and/or transmit TL1 messages from the front CIT port.

The three default logins are `LUC01`, `LUC02`, and `LUC03` (all upper-case letters). The default password is `DDM-2000`. Privileged users should change these defaults before enabling security or setting security to a lockout state.

NOTE:
This command is available to privileged users only.

The input parameters are:

address Address is the address of the CIT and/or DCC ports. There is no default address.

Valid Addresses: **dcc-all, cit-1**

porttype Specifies whether the provisioned Address **cit-1** (DCE port - front access) is used for *CIT* or *TL1* application. If the value of Address is **cit-1**, this parameter can have two possible values: **cit** or **tl1**. Default value is **cit**.

If a CIT port is provisioned to run TL1, up to 50 TL1 remote associations can be created on that CIT port.

NOTE 1:
If as a result of executing this command, the **porttype** parameter's value changes from/to **cit** to/from **tl1**, any active login session on the specified port will be terminated and the user(s) logged out including Privileged users and current users.

NOTE 2:
Once **cit-1** port is set to **tl1**, it needs to be reprovisioned to **cit** before the CIT program can be used again.

baudrate Specifies the baudrate in which TL1 messages are received/transmitted. The values for this parameter are: **1200**, **2400**, **4800**, **9600** (Default), and **19200**.

This parameter is prompted for, only if *porttype* parameter has the value of **tl1**.

NOTE:
If as a result of executing this command, the **baudrate** parameter's value changes, any active login session on the specified port will be terminated and the user(s) logged out; including Privileged users and current users.

echo Specifies whether the character entered needs to be echoed back or not. The values for this parameter are: **enabled**, or **disabled**. The default value is **enabled**.

This parameter is prompted for, ONLY if *porttype* parameter has the value of **tl1**.

sec Security determines whether security is enabled, disabled, or in lockout state on the specified CIT and DCC port(s). Enabling security requires users to enter a valid login and password pair to access the system via the specified CIT or DCC-all.

The values for this parameter are **enabled**, **disabled** (default value), and **lockout**.

When security is in lockout state, the only user type permitted to access the system through the locked out CIT/DCC port is a privileged user; all non-privileged users, even with a valid login and password pair, are not allowed to access the system.

NOTE 1:
When security is in the lockout state, non-privileged users are not deleted from the login/password database, but are simply blocked from accessing the system. Existing active login sessions initiated by non-privileged users are not affected (that is, not dropped) if security is set to **lockout**.

NOTE 2:
If the Address parameter is equal to **cit-1** and Porttype is equal to **tl1**, Security is *enabled* automatically. As a result, this parameter is not prompted for and will not show in the confirmation message.

`to` Timeout specifies the time, in minutes, before an inactive session on the specified port is automatically terminated. This has a value ranging from 0 to 120 minutes and a default value of 15 minutes. Setting this parameter to 0 will disable the timeout function.

Execution of this command for **security reasons** affects all subsequent attempts to establish login sessions but does not affect the currently active sessions.

When security is enabled, the following four types of users are permitted to access the system with a valid login and password:

`privileged` The privileged user may execute any commands, including restricted commands.

`general` The general user may execute any commands not restricted to privileged users.

`maintenance` The maintenance user may only execute commands that access the system, extract reports, and execute maintenance functions through a specific set of commands. This user may not execute any privileged commands.

`reports-only` The reports-only user may only execute commands that extract reports from the system and several other basic commands.

When security is enabled on a system, only the following commands may be executed by reports-only users:

- **`?`** (help)
- **`logout`** (logout)
- **`rlgn`** (remote login)
- **`set-passwd`** (set password)
- **`set-link`** (set link)
- **`^T`** (toggle)
- all **`rtrv`** commands except **`rtrv-lgn`** and **`rtrv-passwd`**.

In addition to **`set-secu`**, the commands **`init-sys`**, **`rtrv-lgn`**, **`set-fecom`**, **`set-feat`**, **`set-lgn`**, **`set-sync`**, **`rtrv-passwd`**, and **`rstr-passwd`** are restricted to privileged users only. The following commands also become restricted to privileged users only when security is enabled on a system:

- **`cpy-prog`** (copy program)
- **`ent-ulsdcc`** (enter upper layer section DCC)
- **`init-pm`** (initialize performance-monitoring)
- **`ins-prog`** (install program)
- **`reset`** (reset system software)
- **`set-date`** (set date)
- **`set-ne`** (set network element)
- **`ent-tl1msgmap`** (enter TL1 message map)

Entering the set-secu command to change the value of **`sec`** on a specified Address will cause the following confirmation message to be displayed:

```
/* Caution!  Network Element access is affected by this command.
   You have selected the set-secu command with these parameters:

   Address = address
   Security = security
   Timeout = n */

Execute? (y/n or CANcel/DELete to quit) =
```

Entering this command to change the value of `porttype` to *`tl1`*, will cause the following confirmation message to be displayed:

```
/* Caution!  Network Element access is affected by this command.
   All active sessions on the affected port will be terminated
   after command completion.
   You have selected the set-secu command with these parameters:

   Address = address
   Porttype = porttype
   Baudrate = baudrate
   Echo = echo
   Timeout = n */

Execute? (y/n or CANcel/DELete to quit) =
```

Entering this command to change the value of `porttype` from *`tl1`* to *`cit`*, will cause the following confirmation message to be displayed:

```
/* Caution!  Network Element access is affected by this command.
   All active sessions on the affected port will be terminated
   after command completion.
   You have selected the set-secu command with these parameters:

   Address = address
   Porttype = porttype
   Baudrate = baudrate
   Echo = echo
   Security = security
   Timeout = n */

Execute? (y/n or CANcel/DELete to quit) =
```

RELATED COMMANDS

rtrv-lgn

rtrv-secu

set-fecom

set-lgn

NAME

set-state-sts1: Set State of STS-1 Channels

INPUT FORMAT

set-state-sts1:*Address***:ps=***PrimaryState*;

DESCRIPTION

This command sets the states of STS-1 channels. It is used to turn on and off the monitoring of signal failures and maintenance signals for specified channels.

The input parameters are:

Address Address identifies the STS-1 channel(s). Valid addresses are:

If the shelf is equipped with 26-type OLIUs in Main unit slots, valid addresses are: **m-1**.

If the shelf is equipped with 28-type OLIUs in Main unit slots (in FiberReach 3.1 and later), the valid addresses are:
all, m-{1-3,all}

If the shelf is equipped with 29-type (starting with Release 4.0) OLIU circuit packs in its Main unit slots, valid Main unit Addresses are:
all,m-{1-12,all}

Channel states can be set for:

- STS-1 channels within OC-1, OC-3 or OC-12 interfaces that are cross-connected to DS3 or DS1 interfaces
- STS-1 channels that are dropped from an OC-3, OC-1 or OC-12 ring interface (29-type) in the Main unit slots to DS1, or DS3 interface (starting with FiberReach Release 3.1, and when equipped with DS3 circuit packs in the function unit slots).

ps PrimaryState is the channel state which may have one of the following values:

auto Set the channel state to automatic. Monitor the channel, but do not report alarm or status conditions. When a good signal is detected, automatically change the channel state to in-service and begin normal reporting of alarm and status conditions.

nmon Set the channel state to not monitored. Do not report alarm or status conditions for the channel. Do not change the channel state to in-service if a good signal is detected. The channel will remain in this state until the state is changed again with this command or until the

cross-connection involving this channel is deleted.

If a primary state of **nmon** is entered, the following message will be displayed:

```
/*  Channel(s) address will not be monitored or
    alarmed in this state */
```

The following confirmation message will be displayed after the command entry:

```
/* Caution!  Alarm or maint. thresholds are affected by this command.
   You have selected set-state-sts1 command with these parameters:

   Address = x
   PrimaryState = x  */

Execute? (y/n or CANcel/DELete to quit) =
```

If an attempt is made to execute this command when a mix of incompatible OLIU packs exists in Main, the request will be denied with the following message:

```
SNVS
/* Status, Not in Valid State */
/* Both main slots must be equipped with compatible OLIU packs. */
```

NOTE:
If an STS-1 address of **all** is provisioned, this command will skip silently all STS-1 channels that are cross-connected as passthrough, dropped not terminated, or not cross-connected at all.

RELATED COMMANDS

ent-crs-sts1

ent-crs-vt1

dlt-crs-sts1

dlt-crs-vt1

rtrv-crs-sts1

rtrv-state-sts1

set-state-vt1

upd

NAME

set-state-t1: Set T1 Port State

INPUT FORMAT

`set-state-t1:`*`Address`***`:ps=`***`PrimaryState`*;

DESCRIPTION

This command sets the state of DS1 or T1 ports. This command is used to turn on and off the alarm due to signal failures from a specified port.

The input parameters are:

`Address` Address identifies the DS1 or T1 port(s).

Valid Addresses (1x1 protected configuration): **`all, {a,b,c,d}-{1,all}-{1-4,all}`**

Valid Addresses (1x7 protected configuration): **`all, {a,b,c}-{1,2,all}-{1-4,all}, d-1-{1-4,all}`**

The BBF6 circuit pack supports 2 T1 ports. When addressing ports on a BBF6, only port numbers 1 and 2 are valid. Specifying **`all`** selects ports 1 and 2 only.

`ps` PrimaryState is the port state which may have one of the following values:

- **`auto`** Set state to be monitored for good signal at the specified port.
- **`nmon`** Set state to "not alarmed" (not monitored).

NOTE:
If a port is in the **`nmon`** state, it must be returned to the **`auto`** state (using this command) before any circuit packs associated with that port can be removed from the equipment list by the **`upd`** command.

If a primary state of **nmon** is entered, the following message will be displayed:

```
/*  Port(s) address will not be alarmed in this state */
```

The following confirmation message will be displayed after the command entry:

```
/* Caution!  Alarm or maint. thresholds are affected by this command.
   You have selected set-state-t1 command with these parameters:

   Address = x
   PrimaryState = x  */

Execute? (y/n or CANcel/DELete to quit) =
```

NOTE:
If an STS-1 address of **all** is provisioned, this command will skip silent ly all STS-1 channels or VTs within those STS-1 channels that are cross-connected a s passthrough, dropped not terminated or even not cross-connected at all.

RELATED COMMANDS

rtrv-t1

rtrv-state

upd

NAME

set-state-t3: Set T3 Port State

INPUT FORMAT

`set-state-t3:`*`Address`***`:ps=`***`PrimaryState`*;

DESCRIPTION

This command sets the state of one or more DS3 ports. This command is used to turn on and off the alarm due to signal failures from a specified port. Starting with FiberReach Release 3.1, this command is allowed ONLY if the shelf is equipped with 28-type OLIUs in Main and DS3 circuit packs in the Function unit slots.

In FiberReach Release 4.0, this command is allowed also if the shelf is equipped with 26/29-type OLIUs in Main and DS3 circuit packs in the Function unit slots.

The input parameters are:

`Address` Address identifies the DS3 port(s).

Valid DS3 Port Addresses (BBG4,BBG4B):**`f, all`**

Valid DS3 Port Addresses (BBG19): **`all, f-{1-2,all}`**

`ps` PrimaryState is the port state which may have one of the following values:

- **`auto`** Set state to be monitored for good signal at the specified port.
- **`nmon`** Set memory state to not-alarmed.

NOTE:
If a port is in the **`nmon`** state, it must be returned to the **`auto`** state, using this command, before any circuit packs associated with that port can be removed from the equipment list by the **`update`** command.

If a port state of **`nmon`** is entered, the following message will be displayed:

```
/*  Port(s) address will not be alarmed in this state */
```

The following confirmation message will be displayed after command entry:

```
/* Caution!  Alarm or maint. thresholds are affected by this command.
   You have selected the set-state-t3 command with these parameters:

   Address = x
   PrimaryState =x */

Execute? (y/n or CANcel/DELete to quit) =
```

RELATED COMMANDS

rtrv-state-eqpt

rtrv-t3

upd

NAME

set-state-vt1: Set State of VT1.5 Channels

INPUT FORMAT

`set-state-vt1:`*`Address`***`:ps=`***`PrimaryState`*;

DESCRIPTION

This command sets the states of VT1.5 channels within:

- OC-1 interfaces (if the shelf is equipped with 26-type OLIUs in Main unit slots)
- OC-3 interfaces (if the shelf is equipped with 28-type OLIUs in Main unit slots).
- OC-12 interfaces (when using 29G-U OLIU circuit packs)

This command is used to turn on and off the monitoring of signal failures and maintenance signals for specified channels.

Channel states can be set for VT1.5 channels within OC-1, OC-3 or OC-12 (Release 4.0) interfaces that are cross-connected to DS1 interfaces.

The input parameters are:

`Address` Address identifies the VT1.5 channel(s). If the shelf is equipped with 26-type OLIUs in Main unit slots, valid addresses are:
`m-1-all`, **`m-1-{1-7}-{1-4,all}`**

If the shelf is equipped with 28-type OLIUs in Main unit slots (in FiberReach 3.1 ,and later), the valid addresses are:
`m-{1-3,all}-{1-7}-{1-4,all}`

If the shelf is equipped with 29-type OLIU circuit packs in its Main unit slots, the valid Main unit addresses are:
`m-{1-12,all}-{1-7,all}-{1-4,all}`

`ps` PrimaryState is the channel state which may have one of the following values:

`auto` Set the channel state to automatic. Monitor the channel, but do not report alarm or status conditions. Do not do performance monitoring for this channel. When a good signal is detected, automatically change the channel state to in-service.

`nmon` Set the channel state to not monitored. Do not report alarm or status conditions for the channel. Do not do performance monitoring for this channel. Do not change the channel state to in-service if a good signal is detected. The channel will remain in this state until the state is changed again with this command or until the

cross-connection involving this channel is deleted.

If a primary state of **nmon** is entered, the following message will be displayed:

```
/* Channel(s) address will not be monitored or
   alarmed in this state */
```

The following confirmation message will be displayed after the command entry:

```
/* Caution!  Alarm or maint. thresholds are affected by this command.
   You have selected set-state-vt1 command with these parameters:

   Address = x
   PrimaryState = x  */

Execute? (y/n or CANcel/DELete to quit) =
```

If an attempt is made to execute this command, when a mix of incompatible OLIU packs exists in Main, the request will be denied with the following message:

```
SNVS
/* Status, Not in Valid State */
/* Both main slots must be equipped with compatible OLIU packs. */
```

NOTE:
If an STS-1 address of **all** is provisioned, this command will skip silently all STS-1 channels or VTs within those STS-1 channels that are cross-connected as passthrough, dropped not terminated or even not cross-connected at all.

RELATED COMMANDS

dlt-crs-vt1

ent-crs-vt1

rtrv-crs-vt1

rtrv-state-vt1

set-state-sts1

NAME

set-sts1: Set STS-1 Characteristics

INPUT FORMAT

set-sts1:*Address*:**dgr=***SignalDegrade*:**sfail=***SignalFailure*[,**nsa=***Alarm*] [,**sa=***Alarm*];

DESCRIPTION

This command provisions the following three types of parameters for STS-1 channels:

Signal Degrade Alarm Threshold:
This parameter is only provisioned for ring channels (for example, incoming STS-1 channels on optical linear extensions in ring systems are not monitored). Possible values are 10^{-5} through 10^{-9}, with a default value of 10^{-6}. Only the 26-type, 28-type and 29-type OLIU circuit packs support the provisionable signal degrade function.

Signal Fail Alarm Threshold:
This parameter is only provisioned for ring channels. Possible values are 10^{-3} and 10^{-6}, with a default value of 10^{-3}.

Alarm Level for SA/NSA STS Path AIS Condition:
The alarm level for both service affecting and non-service affecting path AIS conditions can be provisioned in Release 2.1 and later.

The input parameters are:

Address Address identifies the STS-1 channels.

If the shelf is equipped with 26-type OLIUs in Main unit slots, valid addresses are:
all, m-1

If the shelf is equipped with 28-type OLIUs in Main unit slots (in FiberReach 3.1, and later), the valid addresses are:
all, m-{1-3,all}

If the shelf is equipped with 29-type (FiberReach Release 4.0) OLIUs in its Main unit slots, the valid Main unit Addresses are:
m-{1-12,all} with 29-type OLIUs in Main

dgr *SignalDegrade* specifies a bit error rate (BER) threshold for the STS-1 channel in terms of a logarithm to base 10. When this threshold is crossed, an alarm will be raised and automatic protection switching to the STS-1 protection path will be initiated. The only valid address for the SignalDegrade parameter is **all**. For FiberReach, the signal degrade is an integer with range -5 through -9 and default or original value of -6.

sfail *SignalFailure* specifies the BER of the STS-1 channel in terms of a logarithm to the base 10. Meeting or exceeding this threshold in a "VT Path_Switched ring" is considered a signal fail condition, resulting in a VT AIS insertion and subsequently causing a VT path protection switching. The only valid address for the SignalFailure parameter is **all**. This parameter can have one of the following values:

- **-3** BER threshold resulting in VT AIS insertion in a "VT Path_switched ring" and causing the VT path protection switching (default).
- **-6** If provisioned, this BER threshold will result in VT AIS insertion in a "VT Path_Switched ring", and will cause a VT path protection switching.

nsa This parameter is available in FiberReach Release 2.1 and later. This parameter is the provisioned alarm level of the non-service affecting STS-1 path AIS and has the following values:

- **mn** Minor alarm (default)
- **nr** Not alarmed and not reported.

sa This parameter is the provisioned alarm level of the service affecting STS-1 path AIS and has the following values:

- **cr** Critical alarm (default for ring channels)
- **na** Not alarmed, but reported

If the signal degrade or signal fail threshold parameter is entered and the address used is any value other than **all** the command will be denied with the following message:

```
/* The only valid address for the signal degrade or the signal
   fail parameter is { all }.
   To set the signal degrade parameter enter
 set-sts1:all:dgr=value; */
```

Provisioning the AIS parameters requires that at least one VT cross-connection exist in the specified address range or the command will not execute, and the following message will be displayed.

```
SNVS
/* Status, Not in Valid State */
/* The specified path is not properly cross-connected. */
```

If an attempt is made to execute this command, when a mix of incompatible OLIU packs exists in Main, the request will be denied with the following message:

```
SNVS
/* Status, Not in Valid State */
/* Both main slots must be equipped with compatible OLIU packs. */
```

The following confirmation message will be displayed after the command entry:

```
/* Caution!  Alarm or maint. thresholds are affected by this command.
   You have selected the set-sts1 command with this parameter:

   SignalDegrade = <value>
   SignalFailure = <value>
   ServiceAffectingAIS = <value>
   NonServiceAffectingAIS = <value> */

   Execute? (y/n or CANcel/DELete to quit) =
```

NOTE:
If an STS-1 address of **`all`** is provisioned, this command will skip silently all STS-1 channels that are cross-connected as passthrough, dropped not terminated, or not cross-connected at all.

RELATED COMMANDS

rtrv-sts1

NAME

set-sync: Set Synchronization Characteristics

DESCRIPTION

CAUTION:
Execution of this command may affect service.

This command provisions the synchronization mode switching, synchronization source, when the 26-type, 28-type (Starting with FiberReach Release 3.1) or 29-type OLIUs (Starting with FiberReach Release 4.0) timing hardware is provisioned to be line timed.

For FiberReach, the only provisioned timing mode is line-timed from an incoming optical interface. This timing reference is used to generate all outgoing signals.

Use of this command may affect timing for other network elements of the timing network.

NOTE:
This command is available to privileged users only for all CIT or DCC ports on the shelf.

INPUT FORMAT

RING SYSTEMS - LINE TIMED

set-sync:[**mdsw=***ModeSwitching*][,**src=***SynchronizationSource*];

set-sync:[**mdsw=***ModeSwitching*][,**src=***SynchronizationSource*] [,**auto=***SyncAutoreconfiguration*];

(When equipped with 26-type, 28-type or 29-type OLIUs in Main. 28-type OLIUs are available starting with Release 3.1, and 29-type OLIUs are available starting with Release 4.0.)

The input parameters are:

`mdsw` ModeSwitching may have one of the following values:

`revertive` Revertive mode switching (default value).
If the system switches to holdover timing mode due to a failure of the timing references, it will automatically switch back to the provisioned timing mode (`LineTimed`) after one of the references becomes good.

`nonrevertive` Nonrevertive mode switching.
If the system switches to holdover timing mode due to a failure of the timing references, it will *not* automatically switch back to the provisioned timing mode (`LineTimed`) after the reference becomes good. The **`switch-sync`** command must be used to restore the system to the provisioned timing mode (`LineTimed`).

`src` SynchronizationSource. This parameter selects the line from which shelf line timing will be derived. This parameter may have one of the following values:

`main-1` (default)

`main-2`

`auto` This parameter is available with FiberReach 3.1 and later releases. SyncAutoreconfiguration allows the system to choose the best timing source to use when it is provisioned for Line Timing. The synchronization source selection is based on the synchronization messages received from the available timing (synchronization) sources. Automatic Protection Switching takes place to the standby timing source when the active source fails. The switch is nonrevertive, and there will not be an automatic switch back to the former timing reference.

When SyncAutoreconfiguration is enabled, the system automatically reconfigures between line timing sources. For FiberReach (starting with Release 3.1 and 4.0) **`main-1`** and **`main-2`** are the source options (if the shelf is equipped with 26, 28-type or 29-type OLIUs in Main unit slots).

NOTE:
When the shelf is equipped with 26-type OLIUs, *`auto`* is **`enabled`** by default. When the shelf is equipped with 28/29-type OLIUs, *`auto`* is **`disabled`** by default.

Use the **`switch-sync`** command to manually switch to the other timing source.

This parameter may have the following values:

`enabled` SyncAutoreconfiguration is active.

`disabled` SyncAutoreconfiguration is not active (default).

In FiberReach Release 3.1 and later, when sync messages are active (as set by the **`set-oc3`** and/or **`set-oc12`** command) and a user requests to set the timing source to a LineTime source which has a sync message that does not support timing, the command will be completed, but the following message will be displayed:

```
/* Source selected currently is unusable for timing.
   Timing will switch to holdover or if Sync Autoreconfiguration is
   enabled, timing may switch to other source. */
```

If this command is entered and both Main slots are empty, the command will be denied with the following message:

```
EQWT
/* EQuipage, Wrong Type */
/* No change in provisioning - both main slots are unequipped */
```

For SyncAutoreconfiguration, several other parameters must be set before this feature can be enabled. If these parameters are not set, the SyncAutoreconfiguration request will be denied with the following message:

```
SNVS
/* Status, Not in Valid State */
/* <message reason>
Sync Autoreconfiguration cannot be enabled */
```

Valid message reasons include the following:

- K byte messages disabled
- Sync messages disabled.

If an attempt is made to execute this command when a mix of incompatible OLIU packs exists in the Main slots, the request will be denied with the following message:

```
SNVS
/* Status, Not in Valid State */
/* Both main slots must be equipped with compatible OLIU packs. */
```

The following confirmation message will be displayed after command entry:

```
/* Caution!  Execution of this command may modify network
   synchronization and affect service.
   You have selected the set-sync command with these parameters:

   ModeSwitching = x
   SynchronizationSource = x

Execute? (y/n or CANcel/DELete to quit) =
```

Starting with FiberReach Release 3.1, if both Main unit slots are equipped with either 26 or 28-type OLIUs, the following confirmation message will be displayed after command entry:

```
/* Caution!  Execution of this command may modify network
   synchronization and affect service.
   You have selected the set-sync command with these parameters:

   ModeSwitching = x
   SynchronizationSource = x
   SyncAutoreconfiguration = x */

Execute? (y/n or CANcel/DELete to quit) =
```

The above confirmation message applies also if the Main slots are equipped with 29-type OLIUs (Release 4.0).

When SyncAutoreconfiguration is available and its value is being changed from **`enabled`** to **`disabled`**, the following confirmation message will be displayed after command entry:

```
/* Caution!  Execution of this command may modify network
   synchronization and affect service.  Executing this command with
   auto=disabled will disable autonomous selection of source for
   shelf timing.
   You have selected the set-sync command with these parameters:

   ModeSwitching = x
   SynchronizationSource = x
   SyncAutoreconfiguration = disabled */

Execute? (y/n or CANcel/DELete to quit) =
```

RELATED COMMANDS

rtrv-sync

set-oc3

set-oc12

switch-sync

NAME

set-t1: Set T1 Characteristics

INPUT FORMAT

set-t1:*address*[:**lc=***LineCode*][,**alm=***AlarmLevel*][,**fth=***FailureThreshold*] [,**dlc=***DLCBPVtoLOS*][,**ais=***AlarmIndicationSignal*][,**pmmd=***PMMode*] [,**fmt=***Format*];

DESCRIPTION

CAUTION:
Execution of this command may affect service.

This command sets the parameters of one or more DS1 or T1 ports. These characteristics include alarm levels, line coding, failure thresholds, and AIS conditions.

NOTE:
The DS1 protection circuit pack is automatically provisioned with all the same user-settable options as the service pack it protects, except for the line buildout (LBO) value (which is not provisioned via the CIT).

The input parameters are:

Address Address is the address of the DS1 or T1 port(s) to be provisioned. One port or more may be specified.

Valid Addresses (1x1 protected configurations): **all, {a,b,c,d}-all, {a,b,c,d}-1-{1-4,all}**

Valid Addresses (1x7 protected configurations): **all, {a,b,c,d}-all, {a,b,c}-{1,2}-{1-4,all} d-1-{1-4,all}**

The BBF6 circuit pack supports 2 T1 ports. When addressing ports on a BBF6, only port numbers 1 and 2 are valid. Specifying **all** selects ports 1 and 2 only.

lc LineCode is the DS1 line coding which may be one of the following:

ami	Alternate Mark Inversion (overrides the linecode switch)
b8zs	Bipolar with 8 Zero Substitution (overrides the linecode switch)
noOverride	No override of the linecode switch (default value).

If either **ami** or **b8zs** is selected, the line code will be set to the selected value and a software override will be active even if the selected value matches the current switch setting. While the software override is active, changes in the switch settings will not affect the line code. A software override will remain active until the set-t1 command is executed again and the **noOverride** option is selected or until the associated circuit pack is removed from the equipment list.

alm AlarmLevel sets the alarm level for an incoming DS1 Signal Failure and may be one of the following:

mj	Major Alarm
mn	Minor Alarm
na	No Alarm (default value).

If the system is provisioned for no alarm, the NE ACTY LED on the user panel will be illuminated, and the fault LED on the circuit pack will flash. The condition will be reported in the alarm and status report as a near-end activity.

fth FailureThreshold sets the failure threshold in terms of a logarithm to the base 10. The value may be -8, -7, -6, or -3, corresponding to BERs of 10^{-8}, 10^{-7}, 10^{-6}, and 10^{-3}, respectively. The default value is -3. When the failure threshold is crossed, an alarm will be raised and automatic protection switching of the service line will be initiated.

dlc (bpv) DLCBPVtoLOS determines whether an incoming DS1 signal failure (a bit error rate above the failure threshold set by the failure threshold parameter, **fth**) will be translated to an outgoing DS1 loss of signal (all zeros) at the far end. The value is either **yes** or **no**. The default value is **no**. Setting this parameter to **yes** permits a digital loop carrier system terminal (such as the SLC® 96 carrier system) to detect the loss of signal and initiate protection switching of the DS1. When the parameter is set to **yes**, the **ais** parameter is automatically set to no. (An all zeros signal, not AIS, is transmitted to the far end even if the **AIS** parameter is set to **yes**.)

ais AlarmIndicationSignal determines whether an AIS should be inserted towards the optical fiber when a loss of incoming DS1 signal is detected. The values are **yes** and **no**; the default value is **yes**. This parameter is ignored if the **bpv** parameter (described above) is set to **yes**.

pmmd This parameter sets the mode for ports supported by the DS1 performance-monitoring circuit pack. **Pmmd** is only used for performance-monitoring. Setting this parameter does not affect the transmitted or received signal. This parameter may be one of the following values:

- `off` DS1 PM turned off (default value)
- `on` DS1 PM turned on (only if CP type is BBF3, BBF9, BBF10 or BBF6).

fmt Format supports the PMMode parameter. It is available only if CP type is BBF3 or BBF6.

Also starting with OC-3 Release 15.0, this parameter will be applicable to the T1EXT (BBF6) circuit pack.

This parameter sets the format to be monitored by the DS1 performance-monitoring or T1EXT circuit pack. **Fmt** is only used for performance-monitoring. Setting this parameter does not affect the transmitted or received signal. This parameter may be one of the following values:

- `sf` Superframe
- `esf` Extended superframe, near-end and far-end. (default)
- `esfn` Extended superframe, near-end only.

If multiple addresses are specified, the following caution message will be displayed immediately before the confirmation request message:

```
/* Caution: This command addresses multiple objects within this
   system.  Selections other than CurrentValues will affect all
   addressed objects. */
```

The following confirmation message will be displayed after the command entry, when addressing packs without performance-monitoring capability:

```
/* Caution! Execution of this command may affect service.
   You have selected the set-t1 command with these parameters:

   Address = x
   LineCode = x
   AlarmLevel = x
   FailureThreshold = x
   DLCBPVtoLOS = x
   AlarmIndicationSignal = x */

Execute? (y/n or CANcel/DELete to quit) =
```

The following confirmation message will be displayed after the command entry when addressing packs with performance-monitoring capability or if addressing a group of packs using **`all`** in the address:

```
/* Caution! Execution of this command may affect service.
   You have selected the set-t1 command with these parameters:

   Address = x
   LineCode = x
   AlarmLevel = x
   FailureThreshold = x
   DLCBPVtoLOS = x
   AlarmIndicationSignal = x
   PMMode = x
   Format = x  */

Execute? (y/n or CANcel/DELete to quit) =
```

RELATED COMMANDS

rtrv-t1

set-state-t1

NAME

set-t3: Set T3 Characteristics

INPUT FORMAT

set-t3:*Address*:[**md=***Mode*][,**ais=***AlarmIndicationSignal*][,**alm=***AlarmLevel*] [,**fth=***FailureThreshold*][,**pmmd=***PMMode*][,**frame=***Frame*][,**fmt=***Format*];

DESCRIPTION

CAUTION:
Execution of this command may affect service.

This command sets the characteristic parameters of one or more DS3 ports. These characteristics include alarm levels, failure thresholds, AIS conditions, and performance monitoring.

Starting with FiberReach Release 3.1, this command is allowed ONLY if the shelf is equipped with 28-type OLIUs in Main and DS3 circuit packs in the Function unit slots.

In FiberReach Release 4.0, this command is allowed also if the shelf is equipped with 26/29-type OLIUs in Main and DS3 circuit packs in the Function unit slots.

The input parameters are:

Address Address is the address of the DS3 port(s) to be provisioned. One or all ports may be specified. Function groups equipped with BBG19 DS3 circuit packs have independent ports for each slot in the function group; however parameters provisioned for the function group are applied to both ports.

Valid DS3 Port Addresses (BBG4, BBG4B, BBG19): **{f,all}**

md Mode is the violation monitor removal mode of the DS3 signal. This parameter may have one of the following values:

- **vmr** Monitor and remove DS3 P bit errors (default value).
- **vm** Monitor but do not remove DS3 P bit errors.
- **cc** Clear channel — Do not monitor or remove DS3 P bit errors.

If this parameter is set to **vmr** or **vm**, the **ais** parameter will not be prompted for.

If this parameter is set to **cc**, the **pmmd**, **frame**, and **fmt** parameters will not be used. Also in this case, the **pmmd**, **frame**, and **fmt** parameters will keep their current values. The current values for both parameters will be available to be used whether the

value of **md** is set to `vm` or `vmr`.

ais AlarmIndicationSignal determines whether or not a DS3 AIS should be inserted. The value may be `yes` or `no`. When AIS is set to `yes`:

— DS3 AIS is inserted towards the DSX-3 upon detection of an OC-3 loss of signal or STS path AIS incoming from the fiber.

— DS3 AIS is inserted towards the fiber upon detection of DS3 LOS incoming from the DSX-3.

NOTE:
AIS is always inserted if the violation monitor removal mode is provisioned for `vmr` or `vm`.

NOTE:
If **md** value was set to `vmr` or `vm`, and it is set to `cc` the AIS always defaults to `off` value.

alm AlarmLevel sets the alarm level for an incoming DS3 Signal Failure and may be one of the following:

cr Critical Alarm

mj Major Alarm

mn Minor Alarm

na No Alarm

The default alarm level is critical. If the system is provisioned for no alarm and there is a loss-of-signal condition, the NE ACTY LED on the user panel will be illuminated, and the fault LED on the circuit pack will flash. The condition will be reported in the alarm

fth FailureThreshold sets the Failure Threshold in terms of a logarithm to the base 10. The value may be either -6 or -3, corresponding to BERs of 10^{-6} and 10^{-3}, respectively. The default value is -3. When the failure threshold is crossed, an alarm will be raised.

pmmd PMMode is only used for performance-monitoring (PM). Setting this parameter does not affect the transmitted or received signal. This parameter will appear only if the **vmr** or **vm** mode has already been selected. This parameter may be one of the following values:

on DS3 PM turned on. This is the default value.

off DS3 PM turned off. PM data is neither collected nor reported in this mode.

`frame` Frame is only used for performance-monitoring (PM) on the BBG4/BBG4B, BBG11/BBG11B, or BBG19 circuit packs. Setting this parameter does not affect the transmitted or received signal. This parameter will appear only if the **`vmr`** or **`vm`** mode has already been selected. This parameter may have one of the following values:

- **`m13`** The incoming DS3 signal from both the fiber and the dsx-3 is of the M13 framing type. This is the default value.
- **`cbit`** The incoming DS3 signal from both the fiber and the dsx-3 is of the C-bit framing type.

`fmt` Format supports the PMMode and Frame parameters and sets the type of PMON that will appear in the DS3 PM report. This parameter will appear only if the **`vmr`** or **`vm`** mode has already been selected. If the **`cc`** mode is selected, these parameters will not be visible to the user. This parameter may have one of the following values:

- **`pbit`** When this value is selected, the DS3 PM report will display counts of SEFS as well as DS3 P-bit CV, ES, SES, and UAS (default value). This option is valid for both **`frame`** types.
- **`fmbit`** When this value is selected, the DS3 PM report will provide counts of SEFS as well as DS3 adjusted F&M bit CV, ES, SES, and UAS. This option is valid for both **`frame`** types.
- **`cpbit`** When this value is selected, the DS3 PM report will provide counts of SEFS as well as DS3 CP-bit parity CV, ES, SES, and UAS for both near-end and far-end (FEBE) data. This option is valid ONLY for **`cbit`** type of **`frame`**.

The following confirmation message will be displayed after command entry

```
/* Caution! Execution of this command may affect service.
You have selected the set-t3 command with these parameters:

   Address = x
   Mode = x
   AlarmIndicationSignal = x
   AlarmLevel = x
   FailureThreshold = x
   PMMode = x
   Frame = x
   Format = x */

Execute? (y/n or CANcel/DELete to quit) =
```

NOTE:
The above display will only prompt for the alarm indication signal (AIS) if the Mode is set to `cc`. The above display will only prompt for the PMMode, Frame and Format if the Mode parameter is set to `vmr` or `vm`.

If the **`m13`** frame and **`cpbit`** format options have both been selected, the following denial message will be displayed:

```
/* <address> - invalid combination of frame and format --
provisioning unchanged */
```

The following confirmation message will be displayed after the command entry when addressing a group of packs using `all` in the address:

```
/* Caution! Execution of this command may affect service.
You have selected the set-t3 command with these parameters:

   Address = x
   Mode = x
   AlarmIndicationSignal = x
   AlarmLevel = x
   FailureThreshold = x
   PMMode = x
   Frame = x
   Format = x

Execute? (y/n or CANcel/DELete to quit) =
```

If multiple addresses are specified, the following caution message will be printed out immediately before the confirmation request message:

```
/* Caution: This command addresses multiple objects within this
system.  Selections other than CurrentValues will affect all
addressed objects. */
```

RELATED COMMANDS

rtrv-t3

set-state-t3

NAME

set-trace-sts1: Set STS Path Trace Characteristics

INPUT FORMAT

`set-trace-sts1`:*`Address`*[:EXPTRC=*`Expectedincomingpathtrace`*]
[,TRC=*`OutgoingPathTrace`*];

DESCRIPTION

This command assigns user-selectable alphanumeric character strings to the transmit and receive path trace fields of an STS cross-connected STS-1 signal. The allowed ASCII characters include the letters "A" through "Z" and "a" through "z", numbers "0" through "9", and the following special characters:

# (pound sign)	$ (dollar sign)
% (percent sign)	& (ampersand)
((open parenthesis)	) (close parenthesis)
+ (plus)	* (asterisk)
| (pipe)	- (hyphen)
[(open square bracket)	] (close square bracket)
{ (open bracket)	} (close bracket)
’ (apostrophe)	‘ (grave accent)
. (period)	/ (slash)
< (less than)	> (greater than).

Starting with FiberReach Release 3.1, this command is allowed ONLY if the shelf is equipped with 28-type OLIUs in Main and DS3 (BBG4B) circuit packs in the Function unit slots.

In FiberReach Release 4.0, this command is allowed also if the shelf is equipped with 26/29-type OLIUs in Main and DS3 (BBG4B) circuit packs in the Function unit slots.

NOTE:
This feature is only applicable to STS paths terminating to a BBG4B circuit pack.

The input parameters are:

Address This is a STS-1 channel address of the SONET path terminating signal for which the path trace is assigned.

Valid Addresses (within OC-3 in FiberReach Release 3.1 and later): **m-{1-3,all}**

If the shelf is equipped with 29-type (FiberReach Release 4.0) OLIU circuit packs in its Main unit slots, the valid Main unit addresses are: **m-{1-12}**

If the shelf is equipped with 26-type OLIU circuit packs in its Main unit slots, the valid Main unit addresses are: **m-1**

EXPTRC EXPTRC specifies the expected incoming path trace message. It is a string of 62 or less alphanumeric characters.

TRC TRC specifies the outgoing path trace message. It is a string of 62 or less alphanumeric characters.

If the channel is not cross-connected to a STS-1 PTE, the request will be denied with the following message:

```
SNVS
/* Status, Not in Valid State */
/* Valid cross-connection does not exist. STS Path trace cannot be set. */
```

If the STS-1 channel for which this command was issued is not available, the request will be denied with the following message:

```
SNVS
/* Status, Not in Valid State */
/* Address points to a non-existent channel. */
```

If an attempt is made to set the path trace for an STS path other than the one terminated to a DS3 (BBG4B) circuit pack, the request will be denied with the following message:

```
SNVS
/* Status, Not in Valid State */
/* Check the equipage. BBG4B for OC-3 or FiberReach,
   and BBG11B for OC-12 is required. */
```

If an attempt is made to execute this command, when a mix of incompatible OLIU packs exists in Main, the request will be denied with the following message:

```
SNVS
/* Status, Not in Valid State */
/* Both main slots must be equipped with compatible OLIU packs. */
```

When input, this command will cause the following confirmation request to be displayed:

```
/* You have selected the set-pthtrc command with these
   parameters:

   Address = address
   EXPTRC = message
   TRC = message

Execute? (y/n or CANcel/DELete to quit) =
```

RELATED COMMANDS

rtrv-trace-sts1

rtrv-crs-sts1

set-sts1

NAME

set-vt1: Set VT1.5 Characteristics

INPUT FORMAT

`set-vt1`:*`Address`*:**`dgr=`***`SignalDegrade`*[,**`nsa=`***`Alarm`*][,**`sa=`***`Alarm`*];

DESCRIPTION

This command provisions two type of parameters for VT1.5 channels. They are:

1. **Signal Degrade Alarm Threshold**
   This parameter is provisioned only for ring channels (that is, incoming VT1.5 channels on optical linear extensions in ring systems are not monitored). Possible values are 10^{-5} through 10^{-8}, with a default value of 10^{-6}. Only the 26, 28-type and 29-type OLIU circuit pack supports the provisionable signal degrade function.

2. **Alarm Level for SA/NSA VT Path AIS Condition**
   The alarm level for both service affecting and non-service affecting path AIS conditions can be provisioned in Release 2.1 and later.

The input parameters are:

`Address`

Address identifies the VT1.5 channels.

If the shelf is equipped with 26-type OLIUs in Main unit slots, valid addresses are:
`m-1-{1-7,all}-{1-4,all}, all` (Release 2.1 and later)

If the shelf is equipped with 28-type OLIUs in Main unit slots (in FiberReach 3.1 and later), the valid addresses are:
`m-{1-3,all}-{1-7,all}-{1-4,all}`

If the shelf is equipped with 29-type OLIUs in its Main unit slots, the valid Main unit Addresses are:
`m-{1-12,all}-{1-7,all}-{1-4,all}`

`dgr` SignalDegrade specifies the bit error ratio (BER) threshold for the VT1.5 signals in terms of a logarithm to the base 10. When this threshold is crossed, an alarm will be raised and automatic protection switching to the protection path will be initiated. For Release 2.1 and later, the only valid address for the SignalDegrade parameter is **`all`**.

The default or original value is 10^{-6}.

nsa This parameter is available in FiberReach release 2.1 and later. It is the provisioned alarm level of the non-service affecting VT path AIS and has the following values:

- **mn** Minor alarm (default)
- **nr** Not alarmed and not reported.

sa This parameter is available in FiberReach Release 2.1 and later. This is the provisioned alarm level of the service affecting VT path AIS and has the following values:

- **mj** Major alarm (default for ring channels)
- **na** Not alarmed, but reported

If the signal degrade parameter is entered and the address used is any value other than **all** the command will be denied with the following message:

```
/* The only valid address for the signal degrade parameter is { all }.
   To set the signal degrade parameter enter
 set-vt1:all:dgr=value; */
```

To provision the AIS parameters requires that at least one VT cross-connection exist in the specified address range or the command will not execute and the following message will be displayed.

```
SNVS
/* Status, Not in Valid State */
/* The specified path is not properly cross-connected. */
```

The following confirmation message will be displayed after command entry:

```
/* Caution!  Alarm or maint. thresholds are affected by this command.
   You have selected the set-vt1 command with these parameters: */

   SignalDegrade = <value> */
   ServiceAffectingAIS = <value>
   NonServiceAffectingAIS = <value> */

Execute? (y/n or CANcel/DELete to quit) =
```

If an attempt is made to execute this command, when a mix of incompatible OLIU packs exists in Main, the request will be denied with the following message:

```
SNVS
/* Status, Not in Valid State */
/* Both main slots must be equipped with compatible OLIU packs. */
```

NOTE:
If an STS-1 address of **`all`** is provisioned, this command will skip silently all STS-1 channels or VTs within those STS-1 channels that are cross-connected as passthrough, drop not terminated or even not cross-connected at all.

RELATED COMMANDS

rtrv-vt1

NAME

switch-fn: Protection Switch Function Unit

INPUT FORMAT

`switch-fn:`*`Address`*`:`**`pri=`***`Priority`*`;`

DESCRIPTION

CAUTION:
Execution of this command may affect service.

Starting with FiberReach Release 3.1, this command is allowed ONLY if the shelf is equipped with 28-type OLIUs in Main and DS3 (BBG4/BBG4B) circuit packs in the Function unit slots.

In FiberReach Release 4.0, this command is allowed also if the shelf is equipped with 26/29-type OLIUs in Main and DS3 (BBG4/BBG4B) circuit packs in the Function unit slots.

This command controls operation of function unit circuit pack protection switching when equipped with termination packs such as DS3 circuit packs. This command does not support the BBG19 circuit pack.

The input parameters for this command are:

`Address` Address of the function unit slot pair.

Valid Addresses: **`fn`**

`pri` Priority indicates the priority of the protection switching request and has the following values:

`reset`	Clear active external switch requests.
`inhibit`	Prevent further switches (automatic, manual, or forced) until the switch is reset.
`forced`	Switch to the standby slot, whether it is good or not, and prevent further switches (automatic or manual) until the switch is reset.
`manual`	Switch to the standby slot only if it is good.

After entering this command, the following confirmation message is displayed:

```
/* Caution! Execution of this command may affect service.
   You have selected the switch-fn command with these parameters:

   Address = x
   Priority = pri */

Execute? (y/n or CANcel/DELete to quit) =
```

If this command is executed with priority **`inhibit`** or **`forced`**, then automatic protection switching will be disabled until this command is executed again with priority **`reset`**.

RELATED COMMANDS

rtrv-state

switch-line

NAME

switch-ls: Protection Switch Low Speed

INPUT FORMAT

switch-ls:*Address*:**pri=***Priority*;

DESCRIPTION

CAUTION:
Execution of this command may affect service.

This command controls the operation of low-speed circuit pack protection switching.

The input parameters are:

Address The address of the low-speed slot(s). Addresses may either be a single low-speed slot (for example, **ls-a-l**) or all low-speed slots in a single group (for example, **ls-b-all**).

Valid Low-Speed Slot Addresses for **manual** and **forced**:
ls-{a,b,c,d}-1 (Note: **all** not allowed)

Valid Low-Speed Service Slot Addresses for **reset** and **lockout**:
ls-{a,b,c,d}-{1,all}
(1x1 low-speed protection configuration)
ls-all, ls-{a,b,c}-{1,2}, ls-d-{1}
(1x7 low-speed protection configuration)

Valid Low-Speed Protection Slot Addresses for **reset** and **lockout**:
ls-{a,b,c,d}-2 (Protection slot only with 1x1 low-speed protection)
ls-d-2 (Protection slot only with 1x7 low-speed protection)

pri Priority indicates the priority of the protection switching request and has the following values:

reset Clear active external switch requests (**lockout**, **forced**, or **manual**) and return any traffic on the protection slot to the service slot.

lockout Locks out protection switching requests (except the reset request). If the lockout is directed to the protection slot, any traffic that is currently on the protection line is unconditionally switched back to the service line and no traffic from any service line will be switched to the protection line. If the lockout is directed to a service slot, traffic on that service line that was previously switched to protection is unconditionally

switched back to the service line and no further traffic can be switched from that specific service line to the protection line. The lockout request for either condition will remain in effect until a low-speed protection switch reset is entered.

`forced` Force switch to the protection low-speed slot unless there is an outstanding lockout or forced switch request. For a forced switch, the address must be a single slot. The forced switch will remain in effect until a low-speed protection switch reset or lockout request is entered.

`manual` Manual switch to the protection low-speed slot only if the protection slot is good and not in use (service slot only). For a manual switch, the address must be a single slot. The failure or removal of a DS1 or T1EXT circuit pack, or a forced, lockout, or reset request will preempt a manual switch request.

If the protection switch request changes the protection switching condition to a condition lower or equal to the priority of the pre-existing protection switching condition, execution of this command will be denied with the following denial message:

```
SPSP
/* Status, Protection Switch Priority */
/* The CIT-initiated protection switch request has a lower priority
   than the existing protection switching condition. */
```

If an address of **`all`** is used with a priority of **`manual`**, the request will be denied with the following denial message:

```
IDNC
/* Input, Data Not Consistent */
/* Manual switch not allowed for multiple slots. */
```

If an address of **`all`** is used with a priority of **`forced`**, the request will be denied with the following denial message:

```
IDNC
/* Input, Data Not Consistent */
/* Forced switch not allowed for multiple slots. */
```

If a protection slot address is used with a priority of **`manual`**, the request will be denied with the following denial message:

```
IDNC
/* Input, Data Not Consistent */
/* Manual switch not allowed for protection slot. */
```

If a protection slot address is used with a priority of **`forced`**, the request will be denied with the following denial message:

```
IDNC
/* Input, Data Not Consistent */
/* Forced switch not allowed for protection slot. */
```

If the switch request would place service onto a slot currently holding a circuit pack type that is not allowed ("CP not allowed" alarm active), the request will be denied with the following denial message:

```
SPFA
/* Status, Protection unit FAiled */
```

If the switch request would place service onto a protection circuit pack type that cannot protect the service circuit pack, the request will be denied with the following denial message:

```
SSRD
/* Status, Switch Request Denied */
/* Protection circuit pack cannot protect the service circuit pack */
```

On entry, the following confirmation message is displayed:

```
/*Caution! Execution of this command may affect service.
  You have selected the switch-ls command with these parameters:

  Address = x
  Priority = x  */

Execute? (y/n or CANcel/DELete to quit) =
```

If this command is executed with priority **`lockout`** or **`forced`**, then automatic protection switching will be disabled until this command is executed again with priority **`reset`**.

RELATED COMMANDS

rtrv-state

rtrv-state-eqpt

NAME

switch-path-sts1: Switch Path STS-1

INPUT FORMAT

switch-path-sts1:*Address*:**pri=***Priority*;

DESCRIPTION

This command controls STS-1 path switching on path protected ring configurations. Path switching is always unidirectional (one-way).

This command is allowed if the shelf is equipped with 28-type (Release 3.1), 26-type or 29-type (Release 4.0) OLIUs in Main and all DS3 circuit packs (except BBG19) in the Function unit slots.

The input parameters are:

Address Address is the address of the STS-1 channel currently carrying dropped traffic. When this command is executed, traffic will be switched away from this path to the other path on the ring. There is no default for this parameter. Connections provisioned as 0x1 ring or 0x1 DS3 cannot be switched.

Valid OC-3 Addresses (28-type OLIU): **m{1,2}-{1-3,all}**
(Applicable to BBG4/BBG4B DS3 circuit packs)

Valid OC-12 Addresses: **m{1,2}-{1-12,all}**
(29G-U (Release 4.0 and later) OLIU in Main)

Valid OC-1 Addresses: **m{1,2}-1**
(29G-U (Release 4.0 and later) OLIU in Main)

pri Priority indicates the priority of the protection switch request. The one and only valid value is *manual*. This requests a switch from the addressed path to the standby path unless a path signal fail or path signal degrade exists on the standby path.

If the path address specified in the command is not equipped or the STS-1 channel is not drop, add/drop cross-connected, the command will be denied with the following message:

```
SNVS
/* Status, Not in Valid State */
/* The specified path is not equipped and/or cross-connected. */
```

The following message applies only if the Main unit slots of a shelf are equipped with 29G-U OLIU circuit packs. If the path address specified in the command is an STS-1 channel that is part of an STS-3c cross-connected channel, the command will be denied with the following message:

```
SNVS
/* Status, Not in Valid State */
/* The specified path is not properly cross-connected. */
```

If the addressed path is associated with a connection of type

- pass-through
- 0x1 ring

the command will be denied with the following message:

```
SNVS
/* Status, Not in Valid State */
/* The specified path cannot be switched. */
```

NOTE:
A pass-through path passes directly from the OC-N receiver to the OC-N transmitter. The service carried with this path is not dropped at this node.

If an equal or higher priority switch already exists on the addressed path, the command will be denied with the following message:

```
SPSP
/* Status, Protection Switch Priority */
/* Equal or higher priority switch exists */
```

If **-all** appears in the address and if an equal or higher priority switch already exists on some of the addressed paths, the path is part of an STS-3c cross-connected channel (only if Main unit slots are equipped with 29-type OLIUs) or if the path is VT1.5 add/drop cross-connected, the command will list these exceptions as follows:

```
/* sts1 address equal or higher priority switch exists
   sts1 address vt cross-connected signals exist
       .
*/
```

If **-all** appears in the address and the path is not equipped, not cross-connected, or is a pass-through, 0x1 ring connection, or 0X1 DS3 connection, the path will be silently skipped.

Since DDM-2000 path switching is unidirectional, the user will receive the following notification message immediately before the confirmation request:

```
/* The path protection switching request is unidirectional.
   It may be necessary to perform a switch-path-sts1 at the far end
   to switch both transmit and receive to the same path. */
```

After entering this command, the following confirmation message is displayed:

```
/* Caution! Execution of this command may affect service.
   You have selected the sw-path-sts1 command with these parameters:

   Address=
   Priority=        */

Execute? (y/n or CANcel/DELete to quit) =
```

RELATED COMMANDS

rtrv-crs-sts1

rtrv-crs-vt1

rtrv-state-eqpt

rtrv-state-path e

NAME

switch-path-vt1: Switch Path VT1.5

INPUT FORMAT

switch-path-vt1:*Address*:**pri=***Priority*;

DESCRIPTION

This command controls VT1.5 path switching on path protected ring configurations. Path switching is always unidirectional (one-way).

The input parameters are:

Address Address is the address of the VT1.5 path currently carrying drop or drop and continue traffic. When this command is executed, traffic will be switched away from this path to the other path on the ring. There is no default for this parameter.
Valid addresses are:
m{1,2}-1-all, m{1-2}-1-{1-7}-{1-4,all}

If the shelf is equipped with 26-type OLIUs in Main unit slots, valid addresses are:
m{1,2}-1-all, m{1,2}-1-{1-7}-{1-4,all}

If the shelf is equipped with 28-type OLIUs in Main unit slots (in FiberReach 3.1 and later), the valid addresses are:
m{1,2}-{1-3,all}-{1-7}-{1-4,all}

If the shelf is equipped with 29-type (Release 4.0 and later) OLIU in Main slots, the valid addresses are:
m{1,2}-{1-12,all}-{1-7,all}-{1-4,all}

pri Priority indicates the priority of the protection switch request. The one and only valid value is:

manual This parameter requests a switch from the addressed path to the standby path unless a path signal failure or path signal degrade exists on the standby path.

If the path address specified in the command is not equipped or VT1.5 cross-connected, the command will be denied with the following message:

```
SNVS
/* Status, Not in Valid State */
/* The specified path is not equipped and/or cross-connected. */
```

If the path address specified in the command is a pass-through path, the command will be denied with the following message:

```
SNVS
/* Status, Not in Valid State */
/* The specified path cannot be switched. */
```

NOTE:
A pass-through path passes directly from the OC-N receiver to the OC-N transmitter. The service carried with this path is not dropped at this node.

If an equal or higher priority switch already exists on the addressed path, the command will be denied with the following message:

```
SPSP
/* Status, Protection Switch Priority */
/* Equal or higher priority switch exists */
```

If **-all** appears in the address and if an equal or higher priority switch already exists on some of the addressed paths, the command will list these exceptions. If **-all** appears in the address and the path is STS-1 add/drop cross-connected, it will be listed as an exception.

```
/* vt address equal or higher priority switch exists
   vt address sts cross-connected signal exists
      .     .     .     .     .     .     .
      .     .     .     .     .     .     .
*/
```

Since DDM-2000 path switching is unidirectional, the user will receive the following notification message and confirmation request:

```
/* The path protection switching request is unidirectional.
   It may be necessary to perform a switch-path-vt1 at the far end
   to switch both transmit and receive to the same path. */


/* Caution! Execution of this command may affect service.
   You have selected the sw-path-vt1 command with these parameters:

   Address=
   Priority=        */

Execute? (y/n or CANcel/DELete to quit) =
```

RELATED COMMANDS

rtrv-state-eqpt

rtrv-state-path

NAME

switch-sync: Protection Switch Synchronization

INPUT FORMAT

`switch-sync`:**`s=`***`SyncFunction`*,**`pri=`***`Priority`*;

DESCRIPTION

CAUTION:
Execution of this command may affect service.

This command controls operation of the synchronization protection switching. This command lets the user control which synchronization reference is used and enables the user to switch a synchronization reference when needed.

The input parameters are:

`s` SyncFunction specifies the synchronization function and may be one of the following:

`mode`	Selects protection switching of timing mode. Specify only if the system is provisioned for `LineTimed`.
`circuitpack`	Selects protection switching of timing circuit packs. In Release 3.0 and later, FiberReach selects protection switching of the main OLIU circuit pack that is currently used as the line-timing source for the system to the other main OLIU circuit pack. This will also result in an "active-fn" main OLIU equipment switch.
`src`	Selects the optical line from which shelf line-timing will be derived. The SynchronizationSources that can be switched are **`main-1`** and **`main-2`**.

`pri` Priority indicates the priority of the protection switching request.

In FiberReach Release 3.0 and later, for a SyncFunction value of **`circuitpack`**, the priority (**`pri`**) value is:

`manual`	Switch from active timing circuit pack to standby timing circuit pack

For a SyncFunction value of **`mode`**, the priority (**`pri`**) values are:

`reset`	Clear any active manual switch. This will allow the system to switch back to `LineTimed` if the system is provisioned for non-revertive mode switching or if it has been manually switched to holdover mode.
`manual`	Switch from the provisioned timing mode, `LineTimed`, to holdover mode. The system will remain in holdover mode until the switch is reset.

For a SyncFunction value of **`src`**, the priority (**`pri`**) value is:

`manual`	Switch from the active SynchronizationSource to the standby source.

If no synchronization source switch can be completed due to the equippage of the alternate sources, the command will be denied with the following message:

```
EQWT
/* EQuipage, Wrong Type */
/* Alternate sync sources improperly equipped */
```

If this command is executed with `SyncFunction=`**`mode`**, then automatic protection switching will be disabled until this command is executed again with the same SyncFunction and with `Priority=`**`reset`**.

If an equal or higher priority switch (for example, **`pri`**=inhibit) already exists on the addressed path, the command will be denied with the following message:

```
SPSP
/* Status, Protection Switch Priority */
/* Equal or higher priority switch exists */
```

If the SyncFunction is **`src`** and the priority of **`reset`** or **`inhibit`** is entered, the request will be denied with one of the following denial messages:

```
IDNC
/* Input, Data Not Consistent */
/* Reset not allowed for source switching. */
```

or

```
IDNC
/* Input, Data Not Consistent */
/* Inhibit not allowed for source switching. */
```

If this command is entered and both timing slots are empty, the command will be denied and the following denial message will be displayed:

```
ENEQ
/* Equipage, Not EQuipped */
```

After entering this command, the following confirmation message is displayed:

```
/* Caution!  Execution of this command may affect service.
   You have selected the switch-sync command with these parameters:

   SyncFunction=s
   Priority=pri */

Execute? (y/n or CANcel/DELete to quit) =
```

RELATED COMMANDS

rtrv-state-eqpt

rtrv-sync

set-sync

NAME

test-alm: Test Office Alarms

INPUT FORMAT

`test-alm`:[**`md=`***`Mode`*][,**`r=`***`Repeat`*];

DESCRIPTION

This command tests the audible and visible office alarms and associated user panel LEDs.

The specific office alarm test turns on a specific alarm for 10 seconds and turns it off for 10 seconds, after which the office alarm reverts to its normal operation.

The general office alarm test cycles through the various alarm levels (CR, MJ, MN) at 4-second intervals as shown in the following table:

General Alarm Test

Step	Time (Seconds)	ALARM LEVEL CR	MJ	MN
1	0-4	*off*	*off*	*off*
2	4-8	ON	*off*	*off*
3	8-12	off	ON	*off*
4	12-16	*off*	*off*	ON
5	16-20	*off*	*off*	*off*

The alarm cutoff (ACO) button functions normally while this test is executing. Depressing ACO silences audible office alarms.

Input parameters are:

`md` Mode identifies the office alarm test to be performed. It takes the following values:

- **`all`** General test of all office alarms (default)
- **`cr`** Specific test of critical alarm
- **`mj`** Specific test of major alarm
- **`mn`** Specific test of minor alarm.

`r` Repeat specifies the number of times that Steps 2 through 4 should be repeated. It is an integer with a range of **`1`** through **`10`** and a default value of **`1`**.

This command can be aborted by pressing the "CANcel" or "DELete" key while the command is in progress.

The following denial message will be output if the test cannot be performed due to other activity in the system:

```
test-alm: DENY
SSRB
/* Status, System Resource Busy */
```

NAME

test-led: Test LED Indicators

INPUT FORMAT

`test-led`:[*`Address`*]:[**`r=`***`Repeat`*];

DESCRIPTION

This command activates circuit pack or user panel LEDs for 10 seconds on, then 10 seconds off, after which the LED reverts to normal operation. This command does not affect office alarms.

This test can also be done by pressing the alarm cutoff (ACO) button on the user panel.

The input parameters are:

`Address` This is the address of any slot(s) or **`userpanel`**, with a default value of **`all`**.

Valid Addresses:
`all, main-{1,2,all}, ls-{a,b,c,d,all}-{1,2,all}, sysctl, userpanel`

`fn-{1,2,all}` (For FiberReach R3.1 and later)

`r` Repeat specifies the number of times that the test should be repeated. It is an integer with the range **`1`** through **`10`** and a default value of **`1`**.

This command can be aborted by pressing the "CANcel" or "DELete" key while the command is in progress.

When this command is entered while an alarm test is in progress, the following denial message will be output if the test cannot be done due to other activity in the system.

```
test-led:address DENY
SSRB
/* Status, System Resources Busy */
```

NAME

test-sysctl: Test System Controllers

INPUT FORMAT

`test-sysctl;`

DESCRIPTION

This command causes the entire control system (system controller) to perform a self-test. If this command is entered while a transmission test (**`test-trmsn-t1`**) is in progress, the following denial message will be displayed:

```
SSRB
/* Status, System Resources Busy  */
```

At the end of the test, one of the following messages will be displayed.

If the test passes, the following message will be displayed:

```
test-sysctl: COMPLD
/* Controller Diagnostic Test Report
=================================================================
Test PASSED
*/
```

If the test fails, the following message is displayed, indicating that the controller circuit pack has failed:

```
test-sysctl: COMPLD
/* Controller Diagnostic Test Report
================================================================
SYSCTL CP FAILED
*/
```

In addition to a failure message, the Fault LED on the failed circuit pack and the Major alarm LED on the user panel will be illuminated, and the MJ office alarm will be activated.

NAME

test-trmsn-t1: Test Transmission T1

INPUT FORMAT

`test-trmsn-t1:`*`Address`***`:[dirn=`***`Direction`***`][,dur=`***`Duration`***`]`**;

DESCRIPTION

CAUTION:
Execution of this command will affect service. This command causes the insertion of a test signal on the selected channel in the MUX or DEMUX direction and will affect service on the selected channel.

This command sets up an automated transmission test for a low-speed DS1 or T1 port.

The test signal is a repetitive pattern which the system checks for bit errors. Only one channel is tested each time; multiple channels may not be tested simultaneously. Before this command is executed, the signal must be appropriately looped back. DDM-2000 checks for the presence of a loopback before beginning the test. If no loopback exists, the system will return a warning message before peforming the test.

This command is used for installation of new equipment and for maintenance.

The input parameters are:

`Address` Address of the DS1 or T1 port.

Valid Addresses (1x1 protected configuration):
`{a,b,c,d}-1-{1-4}`
Valid Addresses (1x7 protected configuration):
`{a,b,c}-{1,2}-{1-4}, d-1-{1-4,all)`

The BBF6 circuit pack supports 2 T1 ports. When addressing ports on a BBF6, only port numbers 1 and 2 are valid.

`dirn` Direction of the transmission test. This parameter has the following values:

- **`mux`** The test signal is inserted in the MUX direction (towards the optical fiber) as shown in Figure 11-4 on the following page. This is the default for this parameter.
- **`demux`** The test signal is inserted in the DEMUX direction (towards the DSX or T1 interface) as shown in Figure 11-5 on the following page.

dur Duration of the test in minutes. This value has a range of 1 through 120 with a default value of 1.

This command can be aborted by pressing the "CANcel" or "DELete" key while the command is in progress.

NOTE:
Loopbacks on the fiber when testing in the MUX direction will cause an "inconsistent DCC switches" alarm condition. The alarm should be ignored during the loopback testing. To avoid this alarm, the user may disable the DCC prior to performing this test.

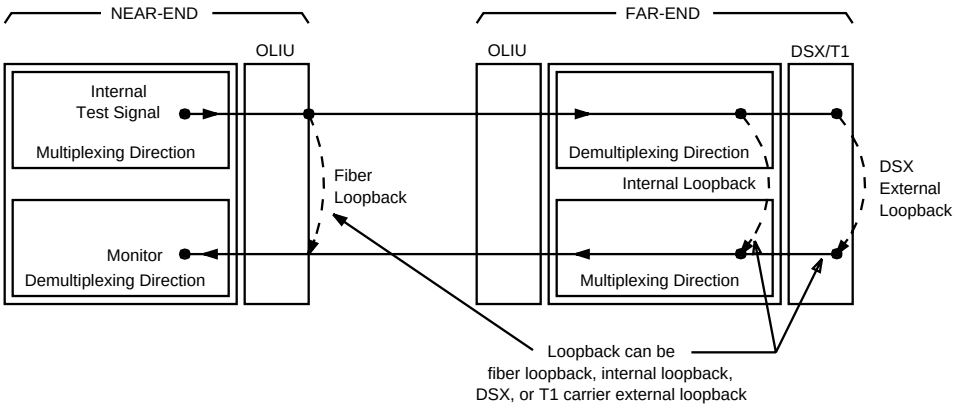

Figure 11-4. Automated Transmission Test of DS1 Signal in MUX Direction

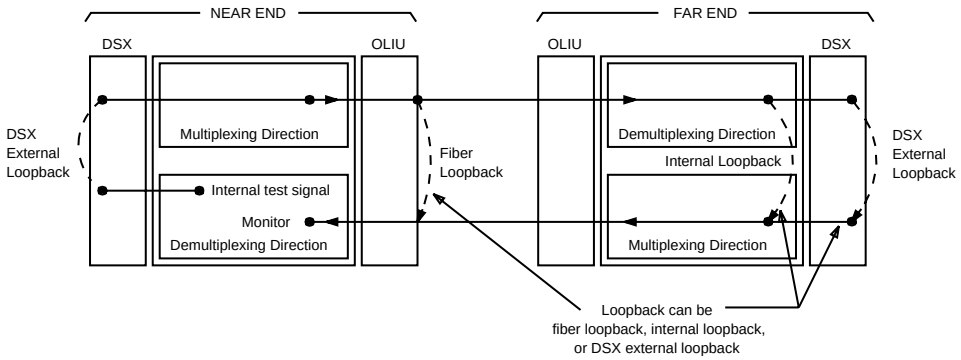

Figure 11-5. Automated Transmission Test of DS1 Signal in DEMUX Direction

This command displays the following output report:

```
/* DS1 Transmission Test Report
============================================================
DS1 Port = addr, Direction = dirn, Duration = dur minutes
============================================================
Elapsed       Errored
Time(sec)     Seconds
============================================================
 nnn            nnn
  .
  .
  .
 nnn            nnn
  */
```

The output parameters are:

`DS1 Port`	The address of the DS1 or T1 port
`Direction`	The direction of the transmission test
`Duration`	The duration of the test in minutes
`Elapsed Time`	Elapsed time of the test in seconds
`Errored Seconds`	Total number of errored seconds.

A question mark (?) as the rightmost character in the `Errored Seconds` indicates uncertain data because of a protection switch during the test.

If an equipment failure is detected during test, the following message is displayed:

```
/* Hardware failed - Test Aborted */
```

The system checks for presence of a loopback at the beginning of the test. If a loopback does not exist, the test continues and the following message appears before and after the report:

```
/* Preliminary hardware test indicates no loopback. */
```

If the test is interrupted or aborted, the following message is displayed:

```
/* Test Manually Aborted */
```

The following denial message will be displayed if the test cannot be performed due to other activity in the system:

```
SSRB
/* Status, System Resources Busy */
```

When this command is entered, the following confirmation message is displayed:

```
/* Establish appropriate loopbacks (manual or electronic)
   prior to test execution, if appropriate. */

/* Caution! Execution of this test may interrupt service.
   You have selected the test-trmsn-t1 command with these parameters:

   Address = x
   Direction = dirn
   Duration = dur */

Execute? (y/n or CANcel/DELete to quit) =
```

RELATED COMMANDS

opr-lpbk-t1

rls-lpbk-t1

NAME

test-trmsn-t3: Test Transmission T3

INPUT FORMAT

`test-trmsn-t3:`*`Address`***`:[dirn=`***`Direction`***`][,dur=`***`Duration`***`];`**

DESCRIPTION

CAUTION:
Execution of this command will affect service. This command causes the insertion of a test signal on the selected channel in the MUX or DEMUX direction and will affect service on the selected channel.

Starting with FiberReach Release 3.1, this command is allowed ONLY if the shelf is equipped with 28-type OLIUs in Main and DS3 circuit packs in the Function unit slots.

In FiberReach Release 4.0, this command is allowed also if the shelf is equipped with 26/29-type OLIUs in Main and DS3 circuit packs in the Function unit slots.

This command sets up an automated transmission test for a low-speed DS3 port. The direction of the test can be towards either the MUX (towards the optical fiber) or the DEMUX (towards the DSX) transmission directions. The test signal is a framed DS-3 signal which DDM-2000 checks for P-bit parity errors. Only one channel is tested each time; multiple channels may not be tested simultaneously. Before this command is executed, the signal must be appropriately looped back.

This command is used for installation of new equipment and for maintenance. In either case, the signal must be appropriately looped back.

If the test is run in the MUX direction and an external loopback is established at the far end, then the far end must be provisioned for clear channel (CC) mode with no AIS in order to test the entire transmission path. If an external loopback is used and the far end is provisioned for VMR Mode, only errors in the receive direction will be monitored.

If the test is run using a DS3 internal loopback, DDM-2000 automatically puts the path in clear channel mode while the loopback is active. When the loopback is released, the mode returns to its previous state.

DDM-2000 checks for the presence of a loopback before beginning the test. If no looback exists, the system will return a warning message before peforming the test.

NOTE 1:
Loopbacks on the fiber when testing in the MUX direction will cause an "inconsistent DCC switches" alarm condition. The alarm should be ignored during the loopback testing. To avoid this alarm, the user may disable the DCC prior to performing this test.

NOTE 2:
When the addressed port is on a BBG19 DS3 circuit pack, the cross-connection between the port and the OC-N ring is a 0x1 DS3 connection. This means that for a test in the MUX direction, the test signal is transmitted only on the outgoing fiber connected to one of the main OLIUs. Only the signal received via the same OLIU is monitored for errors. It is the user's responsibility to ensure that the far-end loopback causes the signal to return on the proper fiber interface.

The input parameters are:

Address Address of the DS3 port.
Valid DS3 Port Addresses (BBG4, BBG4B): **f**

Valid DS3 Port Addresses (BBG19): **f-{1-2}**

dirn Direction of the transmission test. This parameter has the following values:

- **mux** The test signal is inserted in the MUX direction and the received signal is monitored from the MUX direction (default) as shown in Figure 11-6.
- **demux** The test signal is inserted in the DEMUX direction and the received signal is monitored from the DEMUX direction as shown in Figure 11-7.

dur Duration of the test in minutes. This value has a range of 1 through 120 with a default value of 1.

This command can be aborted by pressing the "CANcel" or "DELete" key while the command is in progress.

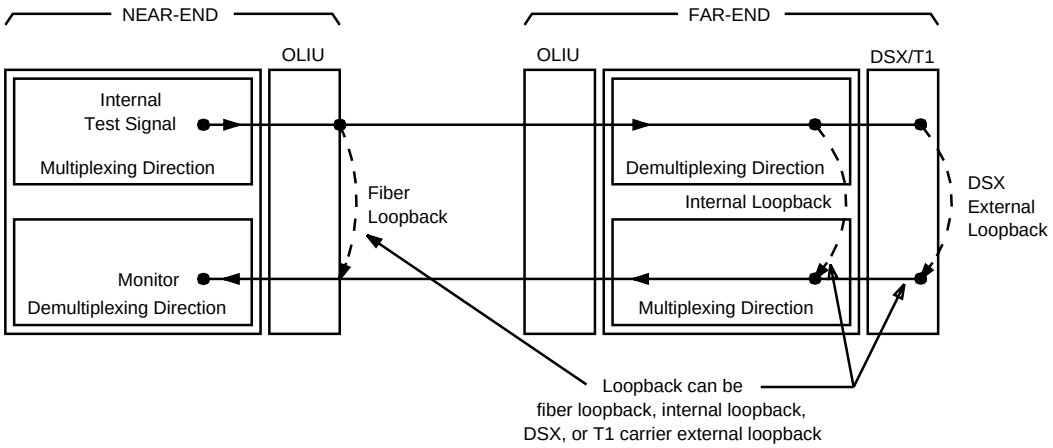

Figure 11-6. Automated Transmission Test of DS3 Signal in MUX Direction

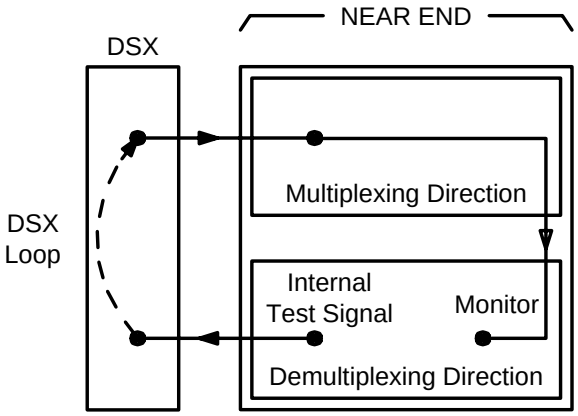

Figure 11-7. Automated Transmission Test of DS3 Signal in DEMUX Direction

This command displays the following output report:

```
/* DS3 Transmission Test Report
==============================================================
DS3 Port = addr, Direction = dirn, Duration = dur minutes
==============================================================
Elapsed       Errored
Time(sec)     Seconds
==============================================================
 n               n      Out Of Frame
 .               .
 .               .
 .               .
  */
```

The output parameters are:

`DS3 Port`	The address of the DS3 port
`Direction`	The direction of the transmission test
`Duration`	The duration of the test in minutes
`Elapsed Time`	Elapsed time of the test in seconds
`Errored Seconds`	Total number of errored seconds.

A question mark (`?`) as the rightmost character in the `Errored Seconds` column indicates uncertain data because of a protection switch during the test.

The message "Out Of Frame" appears in the report if an out-of-frame condition is detected during the test.

If an equipment failure is detected during the test, the following message is displayed:

```
/* Hardware Failed - Test Aborted */
```

The system checks for the presence of a loopback at the beginning of the test. If a loopback does not exist, the test continues and the following message appears before and after the report:

```
/* Preliminary hardware test indicates no loopback. */
```

If the test is interrupted or aborted, the following message is displayed:

```
/* Test Manually Aborted */
```

The following denial message will be output if the test cannot be performed due to other activity in the system:

```
SSRB
/* Status, System Resources Busy */
```

When this command is entered, the following confirmation message is displayed:

```
/* Establish appropriate loopbacks (manual or electronic)
   prior to test execution, if appropriate. */

/* Caution! Execution of this test may interrupt service.
   You have selected the test-trmsn-t3 command with these parameters:

   Address = x
   Direction = dirn
   Duration = dur */
Execute? (y/n or CANcel/DELete to quit) =
```

RELATED COMMANDS

opr-lpbk-t3

rls-lpbk-t3

rtrv-pm-t3

NAME

toggle: Toggle Between Local and Remote Sessions

INPUT FORMAT

^t (Press "**t**" while holding the CTRL key)

DESCRIPTION

This command toggles the user between the local and remote sessions. It provides a quick and easy way to switch from the local session to the remote session, while not terminating either one. The user must have established two valid sessions with network elements (NEs) in the local NE's subnetwork before this command executes successfully.

This command may be entered *only* between command executions; that is, *only* at the system prompt. If entered as a response to a parameter prompt, an error message will be displayed.

This command does not display a typical completion message. When entered, the TID for the NE switched to is displayed, followed by the date and time. This line is followed by a prompt from that system.

The following denial message will be output if the toggle cannot be performed.

```
SNVS
/* Status, Not in Valid State */
/* No remote login is active */
```

If the toggle request fails due to a far-end communication failure (after trying for 45 seconds or more), the following denial message will be displayed:

```
SROF
/* Status, Requested Operation Failed */
/* Far end Communication failure */
```

RELATED COMMANDS

logout

rlgn

NAME

upd: Update Equipment List

INPUT FORMAT

upd;

DESCRIPTION

CAUTION:
Execution of this command may affect service.

This command updates the system data base (as recorded in the nonvolatile memory) to reflect the existing hardware configuration and incoming signals.

This command can be executed either by pushing the Update/Initialize button, located on the SYSCTL circuit pack or by entering the command from the CIT. When the Update/Initialize button is pushed, a dot (.) will appear on the 7-segment display.

NOTE 1:
An **upd** may be performed at any time *except* before or during the 10-second window after powering up the System Controller (SYSCTL) while the critical (CR) LED is flashing.

NOTE 2:
The user should note that the critical LED light on the SYSCTL circuit pack will continue to flash after pressing the Update/Initialize button for a system reset. Do *not* reenter this command. The LED light will stop flashing after 10 seconds.

This command should be executed after the following:

- Removing a circuit pack — Activating the **upd** command following circuit pack removal deletes the circuit pack from the equipment list and clears the associated alarm. This command also changes the slot state to *auto*. Failure to update after removing a circuit pack will continue the "CP removed" alarm, which will become an "unexpected CP type", or similar alarm when a new and different type of circuit pack is placed in the slot. Performing the update at this later time will clear this alarm and provide default provisioning for the new circuit pack, provided the circuit pack is acceptable.
- Removing a signal input — When an incoming DS1 or T1 signal is removed, the system data base must be updated to reflect the change and clear the associated alarm.
- Removing an STS1 or VT1.5 AIS alarm for incoming channels.
- Changing a switch setting on a circuit pack — The **upd** command should be activated following switch setting changes on the BBF1/BBF1B DS1, BBF3 DS1PM, or BBF6 T1EXT circuit packs. This command enters the new settings into the system. Failure to update will cause an "unexpected CP switches" or "unexpected CP type" alarm, since the new switch settings do not agree with the switch settings already recorded in the system. Activating the update function will clear this alarm and make the new switch settings effective.
- Replacing Circuit Pack types — The user can "upgrade" from one type of circuit pack to another type in the following cases.

  Automatic Upgrades — no alarms occur and there is no need to update:

  1. For low-speed slots — from any BBF1/BBF1B to any other BBF1B/BBF1 type DS1 pack
  2. For 1+1 slot pairs — from older 26-type to enhanced 26-type OLIU packs.

  Manual Upgrades — "unexpected CP type" alarm or "protection CP different" alarm will occur, and an update must be done:

  1. For low-speed slots — from BBF1/BBF1B to BBF3 type DS1 packs
  2. For low-speed slots — from BBF3 to BBF1/BBF1B type DS1 packs

Following the documented upgrade procedures (slot 1 of 1x1 or 1+1 pairs), the old type circuit pack is removed and replaced with the new type circuit pack. Activating the update function will clear the alarm for new pack type and make the new circuit pack settings active.

ALARM RESTRICTIONS

Pressing the UPD button or issuing the **`update`** command will *not* change provisioning if the following alarms exist. The user will have to correct the alarmed condition before executing this command. These alarms are:

- illegal CP type
- CP not allowed -(*reason*)
- invalid CP switches.

SYSTEM RESTRICTIONS AND CORRECTIVE ACTIONS

Pressing the UPD button or issuing the **`update`** command will not retire a "CP removed", "unexpected CP type", or "unexpected CP switches" alarm or allow the system to accept the new provisioning request if certain system conditions exist. The user will have to correct the condition before updating the system.

If a restriction is detected, the following message will be displayed:

```
/* Address not equipped properly -- provisioning unchanged. */
```

The system restriction and corrective actions needed are:

- **Port status in NMON or IN SERVICE**
  If a low-speed circuit pack is removed before the incoming signal is removed or while the associated port or ports are in the *`nmon`* state, the system will not recognize that the service is no longer being carried on the port and will not remove the circuit pack from the equipment list. Note that this restriction does not apply to OLIU circuit packs in systems that support OC-N line states.
  Corrective Action: If the port is in the *`nmon`* state, it must be moved to the *`auto`* state, using the **`set-state-t1`** command, before the circuit pack can be removed and the system can be updated. If an incoming signal is present, it must first be removed, then the circuit pack can be removed, and the system can be updated.

- **Manual cross-connection exists**
  A manual cross-connection is entered into the system when an arrangement other than the default is desired and to support various applications.
  Corrective Action: The system will not recognize a circuit pack removal until the manual cross-connection to the addressed circuit pack is deleted. (See the **`dlt-crs-vt1`** and **`rtrv-crs-vt1`** commands for more information on manual cross-connections.)

For 1+1 or 1x1 slot pairs, one circuit pack of the pair can be removed as long as the other remains to support the cross-connection. For rings systems, the MAIN circuit packs are special and all cross-connections in the system must be deleted before the addressed circuit pack can be removed.

- **Upgrades from Slot 2**
  Upgrades from Slot 2 of a 1x1 or 1+1 pair are not permitted when Slot 1 is equipped.
  Corrective Action: The documented upgrade procedures to change one type of circuit pack for another require that the change first be made in slot 1 of a slot pair when slot 1 is equipped.

- **Timing Source removed**
  When the sync timing source is provisioned to be LineTimed and the addressed circuit pack is selected for timing, the slot state will not change to *auto*.
  Corrective Action: Insert an OLIU circuit pack that supports the timing selected or change the timing source.

- **Sync Autoreconfiguration Selected**
  When the sync timing is provisioned for Autoreconfiguration and the addressed circuit pack is one of the sources for timing, the slot state will not change to *auto*.
  Corrective Action: Insert an OLIU circuit pack that supports the timing selected or change the timing provisioning.

- **Change Time setting from Line to External**
  If a system's sync timing source switch from Line to External timing is attempted by changing the switches on the TGS pack to an External timing setting while leaving the sync timing in Autoreconfiguration mode *enabled*, the attempt to switch from Line to External Timing will fail.
  Corrective Action: In order to switch from Line to External timing, the user MUST ensure that in addition to setting the switches on the TGS pack to External timing, the Sync Autoreconfiguration parameter is set to *disabled*.

If a protection switch request of **`forced`**, **`inhibit`**, or **`lockout`** is specified to a slot that is now empty, entering the **`upd`** command may cause the protection switch to occur possibly affecting service. When this occurs, the following confirmation message will be displayed:

```
/* Caution!  Execution of the update command may interrupt
   service because of an active protection switch request on
   an empty slot.  It also updates the equipment list and
   initializes ALL parameters associated with empty slots. */

Execute? (y/n or CANcel/DELete to quit) =
```

RELATED COMMANDS

dlt-crs-vt1

rtrv-crs-sts1

rtrv-crs-vt1

rtrv-state-eqpt

rtrv-state-path

set-state-t1

Detailed Alarm and History Reports

This section provides details of the Retrieve Alarm and Retrieve History commands with explanations of specific output messages.

Each command includes an **INPUT FORMAT** part, providing the syntax for the command, and a **DESCRIPTION** part, providing the details of the command input and output parameters. Following the **DESCRIPTION** part is a table listing the output messages associated with each command and a description of each message.

NAME

rtrv-alm: Retrieve Alarm and Status

INPUT FORMAT

rtrv-alm[:alm=*AlarmLevel*];

DESCRIPTION

This command displays a report of active alarm and status conditions of the local network element. The report includes the source address of the alarm, as well as the date and time of the alarm, whether or not the condition is service affecting, and a short description of the condition.

The input parameter is:

alm AlarmLevel for which a report is desired. This parameter may have one of the following values:

all

cr

mj

mn

pmn

other

Alarms are listed from greatest to least severity. Within a severity level, newer alarms are listed first.

Example Alarm Report:

```
/* Active Alarms and Status Report
==============================================================
 Alarm       Source    Date   Time      Srv   Description
 Level       Address     Detected
==============================================================
 Condition   address   MM-DD HH:MM:SS   srv   description
                              .
                              .
                              .
 Condition   address   MM-DD HH:MM:SS   srv   description
*/
```

The output parameters are:

`Alarm Level` Alarm level is the alarm or status condition being reported. A status condition is named status if there is no user panel LED illuminated for that condition. An alarm condition is the name of the topmost LED on the user panel that is illuminated and may be one of the following conditions:

`CRITICAL`

`MAJOR`

`MINOR`

`PWR MINOR`

`abnormal (status LED)`

`ne-acty (status LED)`

`fe-acty (status LED)`

`status (no LED)`

`Source Address` Source address is the address of the event. An event source may be a slot, channel, port, or an operations interface. See Table 11-1 at the beginning of this chapter for the address of slots, ports, channels, and operations interfaces, respectively.

Refer to Table 11-1 for other source addresses.

`Date Detected` Month (MM) and day (DD) of the event.

`Time Detected` Time (Hours, Minute, Seconds) of event occurrence.

`Srv` Srv indicates whether the condition is service affecting or not, and may have the following values:

SA	Service affecting
NSA	Not service affecting
-	Not applicable for this condition (not service affecting).

`Description` Table 11-3 lists the meanings and likely causes of the conditions reported in the alarm and status report. For conditions with more than one possible cause, the most likely causes are listed first.

RELATED COMMANDS

rtrv-hsty

Table 11-3. RTRV-ALM Descriptions

Description	Meaning
`2nd CP reqd for BBF6`	The BBF6 (T1EXT) circuit packs require both function unit slots in the group to be equipped. A second circuit pack of the same type should be inserted in the empty function unit slot.
`–48V power/fuse failed`	A –48 volt power feeder or a fuse on the user panel has failed.
`–48V power/fuse FA|FB failed`	A –48 volt power feeder or a fuse on the user panel has failed. (FA or FB identifies failure if BBG8 controller used.)
`AC power failed`	The AC power supply to a remote terminal cabinet has failed.
`ACO active`	The parallel telemetry outputs and audible office alarms normally active due to the alarm conditions in the system are being suppressed. See the **`opr-aco`** command.
`AGNE communication failure`	A network element cannot establish communication with the alarm gateway network element (AGNE), or the AGNE cannot establish communication with a network element in the same alarm group. Use the **`rtrv-map-network`** command to determine if both network elements are in the same alarm group. In FiberReach Release 3.0 and later TARP releases, "AGNE communication failure" events will no longer be detected or reported. Starting with FiberReach 4.0, the remote NE status feature is reinstated. If this event is reported it means that a network element cannot establish communication with the alarm gateway network element (AGNE), or that the AGNE has lost communication with a network element in the same alarm group.
`APS - automatic lock`	The service associated with a DS1 or T1EXT CP has been automatically switched and locked onto the protection DS1 or T1EXT CP. The automatic protection switching (APS) lock will remain active until midnight. Cause: Four automatic switches of a single DS1 or T1EXT CP in 10 minutes, probably because of an intermittent failure of the DS1 or T1EXT CP.

Table 11-3. RTRV-ALM Descriptions (Contd)

Description	Meaning
`control`**n**	The specified environmental control point (miscellaneous discrete output) is active. Note: The actual message that appears in the alarm and status report for this condition can be provisioned; this is the default message. See the **`rtrv-attr-cont`** and **`set-attr-cont`** commands. Cause: The system was instructed to close the environmental control point by either a TBOS control point or by the closing of the corresponding environmental control input at the far end.
`CP not allowed-(eqpt)`	A DS1, DS1PM, or T1EXT CP is installed in a low-speed slot and has caused a protection mismatch between a service slot and a protection slot. Also for T1EXT in a Group 4 shelf, equipping the corresponding Function Units with BBG2 packs will cause this message.
`CP removed`	A CP previously installed in this system is removed. The CP should be replaced, or an "update" should be done to remove it from the system equipment list.
`DS1 CP failed`	Internal equipment failure of the specified DS1 CP.
`DS1 loopback`	A loopback (toward the optical fiber) is active on the specified T1 port. See the **`opr-lpbk-t1`** and **`rls-lpbk-t1`** commands.
`DS1 loopback (to fiber)`	A loopback (toward the optical fiber) is active on the specified T1 port. See the **`opr-lpbk-t1`** and **`rls-lpbk-t1`** commands.
`DS1 loopback (to DSX)`	A loopback (toward the DSX or T1 interface) is active on the specified T1 port. See the **`opr-lpbk-t1`** and **`rls-lpbk-t1`** commands.
`DS1 trmsn test IP`	A transmission test using the internal test signal generator and monitor is in progress on the specified T1 port. See the **`test-trmsn-t1`** command.
`DS1PM CP failed`	Internal equipment failure of the specified DS1PM CP.
`DS3 CP failed`	Internal equipment failure of the specified DS3 CP. Starting with FiberReach Release 3.1, this alarm is applicable if the Function unit is equipped with DS3 circuit packs.

Table 11-3. RTRV-ALM Descriptions (Contd)

Description	Meaning
`DS3 loopback (to Fiber)`	A loopback (toward the optical fiber) is active on the specified T3 port. Starting with FiberReach Release 3.1, this alarm is applicable if the Main unit slots are equipped with the 28-type OLIUs and the Function unit slots are equipped with DS3 circuit packs. See the **`opr-lpbk-t3`** and **`rls-lpbk-t3`** commands.
`DS3 loopback (to DSX)`	A loopback (toward the DSX) is active on the specified T3 port. Starting with FiberReach Release 3.1, this alarm is applicable if the Main unit slots are equipped with the 28-type OLIUs and the Function unit slots are equipped with DS3 circuit packs. See the **`opr-lpbk-t3`** and **`rls-lpbk-t3`** commands.
`DS3 trmsn test IP`	A transmission test using the internal test signal generator and monitor is in progress on the specified T3 port. Starting with FiberReach Release 3.1, this alarm is applicable if the Main unit slots are equipped with the 28-type OLIUs and the Function unit slots are equipped with DS3 circuit packs. See the **`test-trmsn-t3`** command.

Table 11-3. RTRV-ALM Descriptions (Contd)

Description	Meaning
`dormant/exec code mismatch`	This alarm condition is raised when the network element detects that it contains dormant software with a release number that does not match the release number of the executing software.
`environment`**n**	The specified environmental alarm point (miscellaneous discrete input) is active. The actual message that appears in the alarm and status report for this condition can be provisioned; this is the default message. See the **`rtrv-attr-env`** and **`set-attr-env`** commands.
`excessive holdover`	The system has been in holdover mode for more than 4 hours. This may cause degraded performance (high error rates) on the transmitted and/or received signals. Whenever this condition exists, the condition "`holdover mode active`" also exists. Likely Causes: See "`holdover mode active`."
`externalMinor`	The external minor alarm input (environmental alarm input 15) is active. Typically, this input will be connected to the power shelf and will indicate that the DC power or the cooling fan in a remote terminal cabinet has failed. The actual message that appears in the alarm and status report for this condition can be provisioned; this is the default message. See the **`rtrv-attr-env`** and **`set-attr-env`** commands.
`fan control relay failed`	The thermostat on the SYSCTL indicates that the cooling fan should be turned on, and the fan control relay on the SYSCTL CP failed to operate or the fan control relay output (backplane connector P62) does not connect to a fan. The system will continue to operate but might overheat if the SYSCTL controls a fan, leading to degraded or interrupted transmission and/or circuit pack failures. Likely causes: Telemetry output common pin on P62 is not grounded; SYSCTL CP failure.
`fan shelf failed`	The system has detected a failure of the DDM-2000 fan shelf. The system will continue to operate but it may overheat. The fan must be replaced within *4 hours* of the failure; otherwise service might be interrupted and/or circuit packs might fail. Likely causes: Filter needs replacing, a fan pack failed, fan shelf has lost one or both power feeders, or the fan shelf control board has failed.

Table 11-3. RTRV-ALM Descriptions (Contd)

Description	Meaning
`forced switch`	When associated with a line, this message means that the identified line is not selected as the active receiving line, and an automatic or manual protection switch to make this the active receiving line will not be done. The forced switch will remain in effect until the protection switch is reset, or a lockout or inhibit switch request is received. Note that switching is unidirectional (one-way). Because of this, the specified line might still be active (if the far end is selecting the specified line to receive traffic), and the far end might still be free to switch the line it is selecting to receive traffic. See the **`switch-line`** command. See the **`switch-ls`** command.

Table 11-3. RTRV-ALM Descriptions (Contd)

Description	Meaning
`holdover mode active`	The system is in holdover synchronization mode. Likely causes: a. The system was manually switched to holdover mode (with the **`switch-sync`** command) and the switch has not been reset b. The system automatically switched to holdover mode due to failure of the timing references, as follows: 1. The reference failures have not cleared. 2. The system is provisioned for nonrevertive synchronization mode switching. 3. The system is provisioned for line-timed operation and the optical line or OLIU circuit pack has failed, or a message indicating an upstream clock problem has been received on the sync message bits of the optical line. (See the **`rtrv-sync`** command.) 4. The system is provisioned for sync message signaling, but the upstream system from which it line-times has not been provisioned for sync message signaling. The condition can be cleared by provisioning both systems the same. (See the **`set-sync`** and **`rtrv-sync`** commands.) The condition can be cleared by repairing at least one of the timing references (if both are failed) and resetting synchronization mode protection switch with the command **`switch-sync:s=mode,pri=reset`**. In a central office system, the synchronization mode can also be reset with a TBOS control point.
`inc. (from DSX) DS1 LOS`	At least 128 consecutive zeros are received in the DS1 signal incoming from the DSX-1, or the energy at the DS1 input is below a preset threshold. Likely causes: Hard failure of upstream equipment or facility (towards the DSX-1). The DS1 input is disconnected at the backplane or the DSX-1; equipment is failed or removed at DSX-1.

Table 11-3. RTRV-ALM Descriptions (Contd)

Description	Meaning
`inc. (from DSX) DS1 sig fail`	The bit error ratio (BER) in the DS1 signal incoming from the DSX-1 exceeds the provisioned failure threshold, 10^{-3}, 10^{-6}, 10^{-7}, or 10^{-8}. Likely causes: Mismatch of line code (AMI/B8ZS); failure of upstream equipment or facility (towards the DSX-1); cross talk in office wiring; failure of the DS1 CP.
`inc. (from fiber) DS3 AIS`	The system has detected DS3 alarm indication signal (AIS) in the DEMUX direction (that is, coming from the fiber) for the specified DS3 signal. Starting with FiberReach Release 3.1, this alarm is applicable if the Main unit slots are equipped with the 28-type OLIUs and the Function unit slots are equipped with DS3 circuit packs. Likely causes: The incoming DS3 signal at the far end is failed, or DS3 AIS is received from the DSX-3 at the far end.
`inc. (from DSX) DS3 AIS`	The system has detected DS3 alarm indication signal (AIS) in the MUX direction (that is, coming from the DSX-3) for the specified DS3 signal. Likely cause: The incoming DS3 signal at the far end is failed.
`inc DS3 LOS`	At least 128 consecutive zeros were detected in the DS3 signal received from the DSX-3. Starting with FiberReach Release 3.1, this alarm is applicable if the Main unit slots are equipped with the 28-type OLIUs and the Function unit slots are equipped with DS3 circuit packs. Likely causes: Equipment failed or removed at DSX-3; DS3 input disconnected at the DSX-3 or at the DDM-2000 backplane.

Table 11-3. RTRV-ALM Descriptions (Contd)

Description	Meaning
`inc. (from fiber) DS3 OOF`	The system has detected a DS3 out-of-frame (OOF) condition in the DEMUX direction (that is, coming from the fiber) for the specified DS3 signal. This condition is reported only if the DS3 interface is provisioned in VM or VMR mode. Starting with FiberReach Release 3.1, this alarm is applicable if the Main unit slots are equipped with the 28-type OLIUs and the Function unit slots are equipped with DS3 circuit packs. See the **`set-t3`** and **`rtrv-t3`** commands. Likely causes: An out-of-frame DS3 signal incoming to the DSX-3 at the far end; failure of the DS3 CP at the far end or near end; the DS3 signal is looped at both ends.
`inc. (from DSX) DS3 sig. fail`	The bit error ratio (BER) in the incoming DS3 signal exceeds the provisioned failure threshold, 10^{-3} or 10^{-6}. Starting with FiberReach Release 3.1, this alarm is applicable if the Main unit slots are equipped with the 28-type OLIUs and the Function unit slots are equipped with DS3 circuit packs. Likely causes: Failure of the upstream equipment or facility (towards the DSX-3); cross talk in office wiring; unprotected failure of DS3 CP.
`inc. EC1 FERF`	The system has detected the EC-1 far-end receive failure (FERF) signal in the incoming EC-1 signal. Likely causes: The far end has detected an incoming signal failure on the specified EC-1 line. This may be caused by failure of the STS1E or 3STS1E CP at the near end, the STS1E or 3STS1E CP at the far end, or the transmit cable on the specified line.
`inc. OC12 FERF`	The system has detected the OC-12 far end receive failure (FERF) signal in the incoming OC-12 signal. Likely causes: The far end has detected an incoming signal failure on the specified OC-12 line. This may be caused by failure of the OLIU CP at the near end, the OLIU CP at the far end, or the transmit fiber on the specified line.
`inc. OC12 line AIS`	The system has detected OC-12 line alarm indication signal (AIS) on an incoming OC-12 line. Likely cause: Failure of an OLIU CP at the far end.

Table 11-3. RTRV-ALM Descriptions (Contd)

Description	Meaning
`inc. OC12 LOF`	The system has detected a loss-of-frame (LOF) condition in an incoming OC-12 signal. LOF is defined as an out-of-frame (OOF) condition (four consecutive errored STS-1 framing patterns) that lasts for at least 3 milliseconds. Likely causes: Failure of the OLIU CP at the near end, failure of the OLIU CP at the far end, or failure of the receive fiber.
`inc. OC12 LOS`	The system has detected a loss-of-signal (LOS) condition on the OC-12 line. Likely causes: Failure of the OLIU CP at near end, failure of the OLIU CP at far end, or failure of the receive fiber.
`inc. OC12 sig. degrade (BER)`	The bit error ratio (BER) in the specified OC-12 line exceeds the provisioned soft error threshold (10^{-9} to 10^{-5}) but is below the hard error threshold of 10^{-3}. Likely causes: Failure of the OLIU CP at the near end, failure of the OLIU CP at the far end, failure of the receive fiber, or optical attenuator is being used when it should not be, or is not being used when it should be.
`inc. OC12 sig. failed (BER)`	The bit error ratio (BER) in the received OC-12 signal exceeds 10^{-3}. Likely causes: Failure of the OLIU CP at the near end, failure of the receive fiber, or failure of the OLIU CP at the far end.
`inc. OC3 BER`	The bit error ratio (BER) in the received OC-3 signal exceeds 10^{-3}. Likely causes: Failure of the OLIU CP at the near end, failure of the receive fiber, or failure of the OLIU CP at the far end. Starting with FiberReach Release 3.1, this message is associated with the 28-type OLIU circuit packs in the Main unit slots, and 22-type OLIUs in the Function unit slots.

Table 11-3. RTRV-ALM Descriptions (Contd)

Description	Meaning
`inc. OC3 FERF`	The system has detected the OC-3 far end receive failure (FERF) signal in the incoming OC-3 signal. Likely causes: The far end has detected an incoming signal failure on the specified OC-3 line. This may be caused by failure of the OLIU CP at the near end, the OLIU CP at the far end, or the transmit fiber on the specified line. Starting with FiberReach Release 3.1, this message is associated with the 28-type OLIU circuit packs in the Main unit slots, and 22-type OLIUs in the Function unit slots.
`inc. OC3 LOF`	The system has detected a loss-of-frame (LOF) condition in an incoming OC-3 signal. LOF is defined as an out-of-frame (OOF) condition (five consecutive errored STS-1 framing patterns) that lasts for at least 3 milliseconds. Likely causes: Failure of the OLIU CP at the near end, failure of the OLIU CP at the far end, or failure of the receive fiber. Starting with FiberReach Release 3.1, this message is associated with the 28-type OLIU circuit packs in the Main unit slots, and 22-type OLIUs in the Function unit slots.
`inc. OC3 LOP STS1` *x*	The system has detected a loss-of-pointer (LOP) condition. A valid STS-1 pointer could not be found for eight consecutive frames in the identified STS-1 signal. Likely causes: If this condition occurs on the STS-1 on both OC-3 lines, the likely cause is an unprotected failure of a MXRVO or DS3 CP at the far end. If this condition occurs only on one OC-3 line, the likely cause is failure of the OLIU CP at the near end or far end.
`inc. OC3 LOS`	The system has detected loss-of-signal (LOS) condition on the OC-3 line. Likely causes: Failure of the OLIU CP at near end, failure of the OLIU CP at far end, or failure of the receive fiber. Starting with FiberReach Release 3.1, this message is associated with the 28-type OLIU circuit packs in the Main unit slots, and 22-type OLIUs in the Function unit slots.

Table 11-3. RTRV-ALM Descriptions (Contd)

Description	Meaning
`inc. OC3 line AIS`	The system has detected OC-3 line alarm indication signal (AIS) on an incoming OC-3 line. Likely cause: Failure of an OLIU CP at the far end. Starting with FiberReach Release 3.1, this message is associated with the 28-type OLIU circuit packs in the Main unit slots, and 22-type OLIUs in the Function unit slots.
`inc. OC3 sig. degrade (BER)`	The bit error ratio (BER) in the specified OC-3 line exceeds the provisioned soft error threshold (10^{-9} to 10^{-5}) but below the hard error threshold of 10^{-3}. Likely causes: Failure of the OLIU CP at the near end, failure of the OLIU CP at the far end, failure of the receive fiber, or incorrect setting of the optical power switch on the OLIU CP. Starting with FiberReach Release 3.1, this message is associated with the 28-type OLIU circuit packs in the Main unit slots, and 22-type OLIUs in the Function unit slots.
`inc. OC3 sig. failed (BER)`	The bit error ratio (BER) in the received OC-3 signal exceeds 10^{-3}. Likely causes: Failure of the OLIU CP at the near end, failure of the receive fiber, or failure of the OLIU CP at the far end. Starting with FiberReach Release 3.1, this message is associated with the 28-type OLIU circuit packs in the Main unit slots, and 22-type OLIUs in the Function unit slots.
`inc. OC1 FERF`	The system has detected the OC-1 far end receive failure (FERF) signal in the incoming OC-1 signal. Likely causes: The far end has detected an incoming signal failure on the specified OC-1 line. This may be caused by failure of the OLIU CP at the near end, the OLIU CP at the far end, or the transmit fiber on the specified line.
`inc. OC1 LOF`	The system has detected a loss-of-frame (LOF) condition in an incoming OC-1 signal. LOF is defined as an out-of-frame (OOF) condition (five consecutive errored STS-1 framing patterns) that lasts for at least 3 milliseconds. Likely causes: Failure of the OLIU CP at the near end, failure of the OLIU CP at the far end, or failure of the receive fiber.

Table 11-3. RTRV-ALM Descriptions (Contd)

Description	Meaning
`inc. OC1 LOS`	The system has detected loss-of-signal (LOS) condition on the OC-1 line. Likely causes: Failure of the OLIU CP at near end, failure of the OLIU CP at far end, or failure of the receive fiber.
`inc. OC1 line AIS`	The system has detected OC-1 line alarm indication signal (AIS) on an incoming OC-1 line. Likely cause: Failure of an OLIU CP at the far end.
`inc. OC1 sig. degrade (BER)`	The bit error ratio (BER) in the specified OC-1 line exceeds the provisioned soft error threshold (10^{-9} to 10^{-5}) but below the hard error threshold of 10^{-3}. Likely causes: Failure of the OLIU CP at the near end, failure of the OLIU CP at the far end, or failure of the receive fiber.
`inc. OC1 sig. failed (BER)`	The bit error ratio (BER) in the received OC-1 signal exceeds 10^{-3}. Likely causes: Failure of the OLIU CP at the near end, failure of the receive fiber, or failure of the OLIU CP at the far end.
`inc. STS1 AIS`	The system has detected an incoming STS-1 alarm indication signal (AIS) in the active OC-3 or OC-1 line. or DS3 AIS toward the DSX or T1 interface and transmitting STS-1 yellow back toward the fiber from which the AIS is being received. Likely causes: Incomplete or incorrect cross-connect provisioning in an end-to-end network; unprotected removal or failure of a DS3, MXRVO, STS1E, or OLIU CP at the far end; unprotected optical line failure. unprotected removal or failure of an OLIU CP at the far end; unprotected optical line failure.
`inc. STS1 LOP OC1` *x*	The system has detected a loss-of-pointer (LOP) condition. A valid STS-1 pointer could not be found for eight consecutive frames in the identified STS-1 signal. Likely causes: If this condition occurs on the STS-1 on both OC-1 lines, the likely cause is an unprotected failure of an MXRVO or an OLIU CP at the far end. If this condition occurs on only one OC-1 line, the likely cause is failure of the OLIU CP at the near end or far end.

Table 11-3. RTRV-ALM Descriptions (Contd)

Description	Meaning
`inc. STS1 LOP OC12` *x*	The system has detected a loss-of-pointer (LOP) condition. A valid STS-1 pointer could not be found for eight consecutive frames in the identified STS-1 signal. Likely causes: If this condition occurs on only one OC-12 line, the likely cause is failure of the OLIU CP at the near end or far end of the line. If the condition affects the same pointer in both OC-N lines of an OC-N interface, the cause could be an unprotected failure of an STS crossconnected circuit pack (DS3, MXRVO, TMUX, OLIU, STS1E) in the adjacent upstream network element. The problem could also be the result of a local or an upstream timing synchronization failure or invalid timing configuration.
`inc. STS1 LOP OC3` *x*	The system has detected a loss-of-pointer (LOP) condition. A valid STS-1 pointer could not be found for eight consecutive frames in the identified STS-1 signal. Starting with FiberReach Release 3.1, this alarm is applicable if the shelf is equipped with 28-type OLIU circuit packs in the Main unit slots, and 22-type OLIUs in Function unit slots (for Broadband applications). Likely causes: If this condition occurs on the STS-1 on both OC-3 lines, the likely cause is an unprotected failure of an MXRVO or a DS3 CP at the far end. If this condition occurs on only one OC-3 line, the likely cause is failure of the OLIU CP at the near end or far end.

Table 11-3. RTRV-ALM Descriptions (Contd)

Description	Meaning
`inc. STS1 sig. degrade (BER)`	For STS-1 path switched ring applications, the bit error ratio (BER) of the specified STS-1 signal exceeds the user-provisioned signal degrade threshold. Likely causes: Failure at a fiber or failure of an OLIU circuit pack at some point in the STS-1 path.
`inc. STS1 unequipped`	The system has detected the unequipped code (SONET path overhead signal code label byte=0) on an in-service STS-1 channel. Likely cause: An upstream STS-1 cross-connect has been deleted.
`inc. STS1 sig. failed (BER)`	For ring applications, the bit error ratio (BER) of the specified STS-1 signal exceeds the signal fail threshold (10^{-3}) or (10^{-6}). For VT1.5 path-switched rings, the system responds by inserting VT Path AIS in each pass-through VT contained in the STS-1. Locally, the system will select the VTs from the STS-1 on the other ring, as appropriate. Likely causes: Failure of the near end OLIU CP reporting the STS-1 failure, failure of the far end OLIU, or failure of the receive fiber if the OC-n is also reporting a failure.
`inc. STS1 yellow`	The system has detected an incoming STS-1 yellow signal inserted by the far-end path terminating equipment. Likely causes: Unprotected unidirectional failure of an OLIU CP or fiber at some point in the end-to-end path.

Table 11-3. RTRV-ALM Descriptions (Contd)

Description	Meaning
`inc. VT AIS`	The system has detected a VT path alarm indication signal (AIS) incoming from the active OC-n line. The system responds by transmitting DS1 AIS toward the DSX-1 or T1 interface and VT yellow back toward the fiber from which the AIS is being received. Likely causes: Incomplete or incorrect cross-connect provisioning in end-to-end network; unprotected removal or failure of a DS1 or T1EXT CP at the far end. In ring applications, a non-service affecting VT AIS alarm message may result from an upstream OLIU or fiber failure affecting only one ring direction. A VT yellow alarm message is not returned for a non-service affecting VT AIS.
`inc. VT LOP`	The system has detected a VT loss-of-pointer (LOP) condition. Likely causes: Unprotected failure of a DS1 or T1EXT CP at the near end; unprotected failure of a DS1 or T1EXT CP at the far end; unprotected failure of an MXRVO CP at the far end; unprotected failure of an OC1 CP at the near or far end; unprotected failure of a 2OC1 CP at the far end.
`inc. VT sig. degrade (BER)`	In a VT path switched ring, the system has detected a VT error rate that exceeds the provisioned threshold of 10^{-5} to 10^{-8}. The system selects a good VT signal from the other ring path. Likely causes: An OLIU circuit pack failure or a fiber failure at some point on the failed ring.

Table 11-3. RTRV-ALM Descriptions (Contd)

Description	Meaning
`inc. VT unequipped`	The system has detected the unequipped code (SONET path overhead VT signal code label byte=0) on an in-service VT1.5 channel. Likely cause: An upstream VT1.5 cross-connect has been deleted.
`inc. VT yellow`	The far end is detecting VT AIS or VT LOP and inserting VT yellow in its transmit signal. Likely causes: Unprotected unidirectional failure of a circuit pack or fiber at some point in the end-to-end path.
`inconsistent DCC values`	The "User/Network" parameter values are set the same at both ends of the DCC.
`inhibit auto. OS messages`	This message occurs when TL1 autonomous alarm reporting is inhibited by the TL1 **`inh-msg`** command. This message is cleared by enabling autonomous message reporting with the TL1 **`alw-msg`** command.
`lockout of protection`	When associated with a low-speed protection slot, this message means that no service slot in the entire low-speed group will be allowed to switch to protection. The lockout will remain in effect until the protection switch is reset. See the **`switch-ls`** command.
`lockout of service`	When associated with a low-speed service slot, this message means that the specified low-speed service slot is active and will not be switched to protection. The lockout will remain in effect until the protection switch is reset. See the **`switch-ls`** command.

Table 11-3. RTRV-ALM Descriptions (Contd)

Description	Meaning
`ls prot assembly removed`	The system has been reset with no low-speed protection assembly installed. This is not a valid system configuration. The user should install a low speed protection assembly and execute the reset function.
`ls prot mode not chgd-(crs)`	An attempt to change the low-speed protection mode has failed because all cross-connections terminating on low-speed ports were not removed. The user should remove all such cross-connections and execute the reset function.
`manual switch`	The specified DS1 or T1EXT CP is manually switched to protection. The manual switch will remain in effect until the protection switch is reset or until a failure occurs and an automatic switch preempts the manual switch. See the **`switch-ls`** command.
`manual sync. mode switch`	The synchronization mode has been manually switched to holdover or free-running and will remain in that mode until the switch request is reset. See the **`switch-sync`** command.
`OC12 connector failed`	The faceplate connector which carries the pass through channels between the OC12 interfaces on the 24-type or 29-type OLIUs has been removed or has failed.
`OLIU CP failed`	Internal equipment failure of the specified OLIU CP.
`program installation IP`	This system is being used to install software into another system. If this procedure is interrupted prior to completion, the remote systems' control circuit packs will likely become inoperable until another install program attempt is successful.
`protection CP different`	This message will only be seen when a FiberReach node is configured for 1x7 low-speed protection. The circuit pack in the protection slot is different from and will not protect all of the circuit packs in the service slots. If this is acceptable, execute the update function to clear the alarm. Otherwise, one or more of the service or protection circuit packs must be changed.

Table 11-3. RTRV-ALM Descriptions (Contd)

Description	Meaning
`section DCC channel failed`	The system cannot communicate with the far-end system through the SONET section data communications channel (DCC) Likely causes: SYSCTL or OHCTL CP failure, reset, or initialization at the far end; failed program installation at far end; program installation in progress at the far end; SYSCTL or OLIU CP failure at the near end.
`SYSCTL CP failed`	Internal equipment failure of the SYSCTL CP. The system has determined that some part of the SYSCTL CP has failed. Note that some types of failures cannot be reported since the SYSCTL CP cannot function under these conditions.
`SYSCTL standby boot fail`	Internal equipment failure of the SYSCTL circuit pack during a local or remote software download. Likely cause: SYSCTL circuit pack hardware failure.
`T1EXT CP failed`	Internal equipment failure of the specified T1EXT CP.
`unexpected CP present`	A circuit pack has been installed into the one of the function unit slots. The circuit pack should be removed from the shelf.
`unexpected CP switches`	When associated with the SYSCTL slot, this message means that an invalid switch setting has been selected on the CP, or that some of the unused switches are not in the prescribed position. For DS1 or T1EXT slots, this message means that a change in a circuit pack switch setting was made.
`unexpected CP type`	When associated with a low-speed slot, this message means that a different but supported circuit pack type (for example, BBF3) is inserted in a slot already provisioned.

NAME

rtrv-hsty:Retrieve History

INPUT FORMAT

`rtrv-hsty;`

DESCRIPTION

This command displays an event-history report. This report contains a list of the most recent system events. This report contains up to 500 events. The events are listed in last-in, first-out order and are date- and time-stamped.

The output report appears as follows:

```
/* Maintenance History Report
==============================================================
Date   Time     Sys.Alm.     Source      Event
                 Level                   Description
==============================================================
MM-DD HH:MM:SS  alarm        address     description
                  .
                  .
                  .
MM-DD HH:MM:SS  alarm        address     description
*/
```

The output parameters are:

`Date`	Month (MM) and day (DD) of the event.
`Time`	Time (hours, minute, seconds) of event occurrence. Time stamps reflect the time the entry is made. Entries are added to the history report BEFORE any applicable holdoff delays and AFTER any applicable clear delays.
`System Alarm Level`	Alarm level corresponds to the system alarm level at the time immediately after the event occurred. Alarm level is the level of the highest active or pending alarm/status condition. The alarm level is reported as if the holdoff delay was zero. Additionally, the alarm level column may show CR, MJ, MN, or PMN alarms for troubles that never really became alarms, since holdoff delays may prevent the troubles from reaching an alarm condition. The alarm level may be one of the following:

`CRITICAL`	Critical Alarm
`MAJOR`	Major Alarm
`MINOR`	Minor Alarm
`PWR MINOR`	Power Minor Alarm
`abnormal`	Abnormal condition
`ne-acty`	Near-End Activity
`fe-acty`	Far-End Activity This alarm level is not reported in TARP releases.
`status`	Status condition
—	No active alarm or status condition in the system.

`Source` The source of the event. An event source may be the entire system or a slot, a channel, or an operations interface. If security is enabled, it may also be a CIT or a login name. Refer to "Commands" and Table 11-1 at the beginning of this section for the addresses of lines, slots, ports, channels, and operations interfaces.

`Event Description` Table 11-4 lists the meaning and likely cause of each of the messages that appear in the maintenance history report.

In addition to the messages listed here, any of the messages that appear in the alarm and status report can appear in the history report to record the onset of alarm and status conditions.

Also, all CIT and TL1 commands that affect the state of the system (provisioning commands; protection switching commands; loopbacks; transmission, alarm, and telemetry tests) will appear in the report.

NOTE:
Any messages that appear in the RTRV-ALM report may also appear in the history report.

Table 11-4. RTRV-HSTY Descriptions

Description	Meaning
`-48V power/fuse good`	A failed -48 volt power feeder or a failed fuse on the user panel has been repaired.
`CP removed`	A circuit pack has been removed from the specified slot.
`AC power failed-FE clrd`	The AC power supply to a remote terminal cabinet has been restored.
`AC power good`	The AC power supply to the shelf has been restored.
`AGNE communication good`	An AGNE communication failure has been cleared. In FiberReach Release 3.0 and later TARP releases, this event will not appear in the history report anymore, since the "AGNE communication failure" is no longer detected in those releases.
`APS - CP failed`	An automatic protection switch was done because the system detected a circuit pack failure.
`APS - Fn failure`	This means that there exists at least one local Hairpin Add-Drop cross-connect established between Fn-X and Fn-Y, where Fn-X contains a 27G2-U OLIU circuit pack. An automatic protection switch on the Main circuit packs (CPs) was done because the system detected a circuit pack failure/removal of a 27G2-U in Fn-X-1/2, which caused the Main packs to switch as well. **NOTE:** The APS of Mains did not take place in this case because of a Main CP failure
`APS - OC3c Data intf failed`	An automatic protection switch was done because the system detected a failure of the OC3C data interface on the BBG21 circuit pack. Use the rtrv-state-eqpt command to view the current state of this circuit pack.
`APS - automatic lock reset`	The automatic protection switch lock for a DS1 or T1EXT circuit pack has been released.
`APS - sig. degraded`	An automatic protection switch was done because the system detected a degraded signal on the OC-N line or path.
`APS - sig. failed`	An automatic protection switch was done because the system detected a failure of the OC-N line or path (incoming AIS, loss of signal, or bit error rate higher than 10^{-3}).
`auto switch`	An automatic protection switch of a DS1 or T1EXT circuit pack is active. When the failure that caused the switch to be done clears, the switch will be reset automatically. Likely causes: Protected failure or removal of a DS1 or T1EXT CP.

Table 11-4. RTRV-HSTY Descriptions (Contd)

Description	Meaning
`auto sync. mode switch`	An automatic protection switch of the synchronization mode is active. When the failure that caused the switch to be done clears, the switch will be reset automatically if automatic mode switching is enabled. (See the **`set-sync`** and **`rtrv-sync`** commands.)
`CIT timeout`	A craft interface terminal (CIT) session was automatically terminated because there was no activity on the CIT for the provisioned time. (See the **`set-secu`** command.)
`control`**`n`** `rlsd`	The system has released the specified miscellaneous discrete environmental control because it has been requested to do so through the serial telemetry or discrete telemetry interface. This message will appear only in a remote terminal. Any name may be provisioned in place of the `control`**`n`** part of this message.
`cpy-prog compl.`	The software copy procedure has been completed. This message will show at the source NE.
`disconnect`	The craft interface terminal has been disconnected.
`dlt-ulsdcc compl.`	Starting with FiberReach Release 3.0 and later TARP releases, this event will indicate the deletion of provisionable parameters of Layer 4 (that is, deletion of TARP Adjacent NE from the Manual Adjacency list, deletion of a TARP Data Cache entry).
`DS1 CP good`	The failure of the specified circuit pack has cleared.
`DS1 CP inserted`	A circuit pack was inserted into the shelf.
`DS1 or T1 port in service`	A DS1 or T1 port was put in the in-service state. This happens automatically when an incoming signal is detected (coming from the DSX or T1 interface) unless the port has been provisioned to the "not monitored" state.
`DS1PM CP good`	The failure of the DS1PM circuit pack has cleared.

Table 11-4. RTRV-HSTY Descriptions (Contd)

Description	Meaning
`DS1PM CP inserted`	A DS1PM circuit pack was inserted into the shelf.
`DS3 CP good`	The failure of the DS3 CP has been cleared. This is applicable starting with FiberReach Release 3.1
`DS3 CP inserted`	A DS3 circuit pack was inserted into the shelf. This is applicable starting with FiberReach Release 3.1
`DS3 port in service`	A DS3 port was put in the in-service state. This happens automatically when an incoming signal is detected (coming from the DSX) unless the port has been provisioned to the not monitored state. Starting with FiberReach Release 3.1, this event is applicable if the Function unit slots are equipped with DS3 circuit packs.
`enable auto OS messages`	Autonomous OS message reporting has been enabled with the TL1 command **`alw-msg`**.
`environment`**`n`** `rlsd`	The specified miscellaneous discrete environment alarm input point has been released, indicating that an environmental alarm or status condition has cleared. This message will appear only in a remote terminal. Any name may be provisioned in place of the `environment`**`n`** part of this message.
`externalMinor clrd`	The external minor alarm condition has cleared.
`fan control relay good`	The fan control relay on the SYSCTL CP was failed but is now operating properly to turn on the fans.
`fan shelf good`	A fault on the fan shelf has been cleared.
`frequency error clrd`	The frequency offset failure has been cleared.

Table 11-4. RTRV-HSTY Descriptions (Contd)

Description	Meaning
`holdover mode clrd`	The system is no longer in holdover timing mode. It has switched from holdover mode to the provisioned timing mode (`LoopTimed`).
`inc. DS1 good`	A failure of the DS1 signal coming from the DSX or T1 interface is cleared. For IMA LAN, a failure of the DS1 signal coming from the (high speed) fiber is cleared.
`inc. (from fiber) DS3 AIS clrd`	The system is no longer detecting DS3 AIS (alarm indication signal) in the DEMUX direction (that is, coming from the fiber). Starting with FiberReach Release 3.1, this event is applicable if the Function unit slots are equipped with DS3 circuit packs.
`inc. DS3 good`	A failure of the DS3 signal coming from the DSX is cleared. Starting with FiberReach Release 3.1, this event is applicable if the Function unit slots are equipped with DS3 circuit packs.
`inc. (from fiber) DS3 OOF clrd`	A DS3 out-of-frame (OOF) condition in the DEMUX direction (coming from the fiber) is cleared. Starting with FiberReach Release 3.1, this event is applicable if the Function unit slots are equipped with DS3 circuit packs.
`inc. OC12 FERF clrd`	The system is no longer detecting the OC-12 far end receive failure (FERF) signal.
`inc. OC12 good`	A failure of the OC-12 signal from the DSX has been cleared.
`inc. OC12 LOP STS1 #`*x* `clrd`	The system is no longer detecting a loss-of-pointer (LOP) condition on the specified STS-1 signal.

Table 11-4. RTRV-HSTY Descriptions (Contd)

Description	Meaning
`inc. OC3 FERF clrd`	The system is no longer detecting the OC-3 far end receive failure (FERF) signal. This event is applicable starting with FiberReach 2.2 and 3.1, when the shelf is equipped with 28-type OLIUs in the Main unit slots.
`inc. OC3 good`	A failure of the OC-3 line has been cleared. This message is associated with the 28-type OLIUs in Main and is available in FiberReach 2.2, 3.1 and later.
`inc. OC3 LOP STS1 #`*x* `clrd`	The system is no longer detecting a loss-of-pointer (LOP) condition on the specified STS-1 signal.
`inc. OC3 sig. degrade clrd`	A failure of the specified OC-3 signal has cleared. OC-3 line AIS and/or OC-3 line FERF conditions may still be present on the specified OC-3 line. The OC-3 LOP condition may still be present for one or more of the STS-1 signals in the OC-3 line. This message is associated with the 28-type OLIUs in Main and is available in FiberReach 2.2, 3.1 and later.
`inc. OC3 line AIS clrd`	The system is no longer detecting the OC-3 alarm indication signal (AIS) on the specified OC-3 line. This message is associated with the 28-type OLIUs in Main and is available in FiberReach 2.2, 3.1 and later.
`inc. OC1 FERF clrd`	The system is no longer detecting the OC-1 far end receive failure (FERF) signal.
`inc. OC1 good`	A failure of the OC-1 line has been cleared.
`inc. OC1 sig. degrade clrd`	A failure of the specified OC-1 signal has cleared. OC-1 line AIS and/or OC-1 line FERF conditions may still be present on the specified OC-1 line. The OC-1 LOP condition may still be present for the STS-1 signal in the OC-1 line.
`inc. OC1 line AIS clrd`	The system is no longer detecting the OC-1 alarm indication signal (AIS) on the specified OC-1 line.

Table 11-4. RTRV-HSTY Descriptions (Contd)

Description	Meaning
`inc. STS1 AIS clrd`	The STS-1 alarm indication signal (AIS) is no longer being received. An upstream failure (in the MUX direction) has cleared.
`inc. STS1 LOP OC12` *`slot`* `clrd`	The system is no longer detecting a loss-of-pointer (LOP) condition on the specified STS-1 signal.
`inc. STS1 LOP OC3` *`slot`* `clrd`	The system is no longer detecting a loss-of-pointer (LOP) condition on the specified STS-1 signal. Starting with FiberReach Release 3.1, this event is applicable if the shelf is equipped with 28-type OLIUs in the Main unit slots, and 22-type OLIUs in the Function unit slots (used for 0X1 STS-3c).
`inc. STS1 LOP OC1` *`slot`* `clrd`	The system is no longer detecting a loss-of-pointer (LOP) condition on the specified STS-1 signal.
`inc. STS1 sig. degrade clrd`	A failure of the specified STS-1 signal has cleared.
`inc. STS1 sig. failed clrd`	A failure of the specified STS-1 signal has cleared.
`inc. STS1 unequipped clrd`	A failure of the specified STS-1 signal has cleared.
`inc. STS1 yellow clrd`	The STS-1 yellow signal is no longer being received.
`inc. VT AIS clrd`	The VT alarm indication signal (AIS) is no longer being received. A downstream failure (in the MUX direction) has cleared
`inc. VT LOP clrd`	A loss-of-pointer condition on the VT1.5 signal has been cleared.
`inc. VT sig. degrade clrd`	Failure of the specified VT1.5 signal has cleared.
`inc. VT unequipped clrd`	A failure of the specified VT1.5 signal has cleared.
`inc. VT yellow clrd`	The VT yellow signal is no longer being received from the fiber (in the DEMUX direction).
`ins-prog compl.`	The software installation procedure has been completed. This message will show at the source NE.

Table 11-4. RTRV-ALM Descriptions (Contd)

Description	Meaning
`login:` *`login_id`*	A login session with a user's login identification has been started on the specified CIT port. Starting with FiberReach Release 4.0, this is applicable to the TL1 X.25 port also.
`login:` *`login_id DENY`*	A login session was attempted but denied because of an invalid login and password pair, or the system was in Lockout state. Starting with FiberReach Release 4.0, this is applicable to the TL1 X.25 port also.
`logout:` *`login_id`*	A login session with a user's login identification has ended on the specified CIT port. Starting with FiberReach Release 4.0, this is applicable to the TL1 X.25 port also.
`logout:` *`login_id DISCONNECT`*	A login session with a user's login identification has ended by a disconnect on the specified CIT port. Starting with FiberReach Release 4.0, this is applicable to the TL1 X.25 port also.
`low speed prot mode chgd to 1x1`	The low-speed protection mode has been changed from 1x7 to 1x1. This was accomplished by changing the low speed protection assembly and executing a system reset.
`low speed prot mode chgd to 1x7`	The low-speed protection mode has been changed from 1x1 to 1x7. This was accomplished by changing the low speed protection assembly and executing a system reset.
`ls prot assembly removed clrd`	The alarm indicating that the system was reset with no low-speed protection assembly installed has been cleared.
`ls prot mode not chgd clrd`	The alarm indicating a failed attempt to change the low-speed protection mode has been cleared. If the low-speed protection mode has been changed, a separate history log event will document the change.

Table 11-4. RTRV-ALM Descriptions (Contd)

Description	Meaning
`main-{1,2} protection switch`	Equipment switching in a ring application has occurred due to equipment failure.
`OLIU CP good`	The failure of the specified circuit pack has cleared.
`OLIU CP inserted`	A circuit pack was inserted into the shelf.
`protection CP different clrd`	The alarm indicating that a low-speed protection slot contains a circuit pack that cannot protect all of the service slots has been cleared. Note that the condition that caused the alarm may not have been removed.
`remote session logout`	A remote CIT session (set up by the `rlgn` command) has been terminated. This may have been caused by normally logging out of the remotely accessed far end session, or once in the far end session, the user toggled back and logged out of the local session.
`remote TL1 session logout`	A remote TL1 session (set up by the `ACT-USER` command) has been terminated. This is caused by normally logging out of the remotely accessed far end TL1 session. (This is reported starting with FiberReach Release 4.0)
`remote TL1 session terminated`	A remote TL1 session (set up by the `ACT-USER` command) has been abnormally terminated. This may have been caused by a failure of the controller, or any other abnormal termination at the far end NE. (This is reported starting with FiberReach Release 4.0)
`remote session terminated`	A remote CIT session (set up by the `rlgn` command) has been abnormally terminated. This may have been caused by a failure of the controller, circuit pack failure, timeout, or any other abnormal termination at the far end NE.
`reset`	The system software program has been reset.
`rlgn:`*`login_id DENY`*	A remote login session was attempted but denied because of an invalid login and password pair, or the DCC connecting the remote system was in Lockout state.

Table 11-4. RTRV-HSTY Descriptions (Contd)

Description	Meaning
`section DCC channel good`	The failure of the SONET section data communications channel has cleared.
`STS1 channel in service`	An STS1 channel was put in the in-service state. This happens automatically when a "good" signal is detected on the channel (neither AIS, unequipped signal, nor "loss of pointer" condition is present), unless the channel has been provisioned to the "not monitored" state.
`switch reset`	— An automatic protection switch of a DS1 or T1EXT circuit pack been automatically reset. — The system has switched from holdover synchronization mode to the provisioned synchronization mode (`LoopTimed`). or — A manually initiated protection switch has been reset (by the **`switch-sync`**, or **`switch-ls`** command), or by removing a CP from the shelf.
`sysctl crs map recovered`	A read failure of the cross-connection data base occurred during restart, but the backup copy was recovered and is being used.
`sysctl crs map initialized`	A read failure of the cross-connection data base occurred during restart, and recovery using backup copies also failed. The cross-connection map was initialized.
`sysctl channel states initialized`	A read failure of the channel state data base occurred during restart, and recovery using backup copies also failed. The channel state data on SYSCTL was used.
`sysctl port states initialized`	A read failure of the port state data base occurred during restart, and the recovery using backup copies also failed. The port state data on SYSCTL was used.
`T1EXT CP good`	The failure of the specified circuit pack has cleared.
`T1EXT CP inserted` `TMUX CP good`	A circuit pack was inserted into the shelf. The failure of the TMUX CP has been cleared.
`TMUX CP inserted`	A TMUX circuit pack was inserted into the shelf.
`VT channel in service`	A VT channel was put in the in-service state. This happens automatically when a "good" signal is detected on the channel (neither AIS, unequipped signal, nor "loss of pointer" condition are present), unless the channel has been provisioned to the "not monitored" state.

A SONET Overview

A

Contents

Overview A-1

History A-1

Basic Purpose A-2

Technical Overview A-2

- SONET Signal Hierarchy A-2
- SONET Layers A-4
- SONET Frame Structure A-6
- Section Overhead A-6
- Line Overhead A-7
- Path Overhead A-8
  - STS-1 Path Overhead A-8
  - VT Path Overhead A-9
- SONET Multiplexing Procedure A-10
- SONET Demultiplexing Procedure A-12
- SONET Digital Multiplexing Schemes A-14
  - Asynchronous Multiplexing A-14
  - Synchronous Multiplexing A-15
- Virtual Tributary Signals A-15
- Concatenated Mode A-16

SONET Interface A-18

- SONET Payloads A-18
- Higher Rate Transport A-20

Conclusion A-20

Contents

A SONET Overview

A

Overview

This section briefly describes the Synchronous Optical Network (SONET).

History

In the early 1980s, the American National Standards Institute (ANSI) recognized the need for an optical signal standard for future broadband transmission. The ANSI T1X1 subcommittee began working on optical signal and interface standards in 1984. In 1985, Bellcore (now Telcordia Technologies) proposed a network approach to fiber system standardization to T1X1. The proposal suggested a hierarchical family of signals whose rates would be **integer multiples** of a basic modular signal. The proposal further suggested a synchronous multiplexing technique, leading to the coining of the term *Synchronous Optical NETwork* (SONET).

The International Telephone and Telegraph Consultative Committee (CCITT) first showed interest in 1986. Conferences held through 1987 and 1988 resulted in coordinated specifications for both the American National Standard (SONET) and the CCITT-International Standard, Synchronous Digital Hierarchy (SDH). Approval of both sets of standards occurred in late 1988.

Basic Purpose

The basic purpose of SONET is to provide a standard synchronous optical hierarchy with sufficient flexibility to accommodate digital signals that currently exist in today's network as well as those planned for the future.

SONET currently defines standard rates and formats and optical interfaces. These and other related issues continue to evolve through the ANSI committees. SONET ultimately will permit an optical midspan meet in a multivendor environment.

The American National Standard defines the following:

- Optical parameters (*ANSI** T1.106-1988)
- Electrical parameters (*ANSI* T1.102-1993 Draft)
- Multiplexing schemes to map existing digital signals (for example, DS1, DS2, and DS3) into SONET payload signals (*ANSI* T1.105-1991)
- Criteria for optical line automatic protection switch (APS) (*ANSI* T1.105-1991)
- Overhead channels to support standard operation, administration, maintenance, and provisioning (OAM&P) functions (*ANSI* T1.105-1991).

Technical Overview

SONET Signal Hierarchy

The SONET signal hierarchy is based on a basic "building block" frame called the synchronous transport signal - level 1 (STS-1), as shown in Figure A-1 on the following page. The STS-1 frame has a reoccurring rate of 8000 frames per second. Each frame is 125 microseconds.

The STS-1 frame consists of:

- 90 columns (each column is an 8-bit byte)
- 9 rows.

The STS-1 frame is transmitted serially starting from the left with row 1 column 1 on through column 90, then row 2 column 1 through 90, continuing on, row-by-row, until all 810 bytes (9 X 90) of the STS-1 frame have been transmitted.

Since each STS-1 frame consists of 810 bytes and each byte has 8 bits, the frame contains 6480 bits a frame. There are 8000 STS-1 frames per second, at the STS-1 signal rate of 51,840,000 (6480 X 8000) bits a second.

The first three columns in each of the nine rows carry the SECTION and LINE overhead bytes. Collectively, these 27 bytes are referred to as transport overhead.

The remainder of the frame, columns 4 through 90, is reserved for payload signals (for example, DS1, DS3, and path overhead) and is referred to as the STS-1 synchronous payload envelope (STS-1 SPE). The optical counterpart of the STS-1 is the optical carrier level 1 signal (OC-1), which is the result of a direct optical conversion. The electrical counterpart of the STS-1 is the electrical carrier level 1 signal (EC-1).

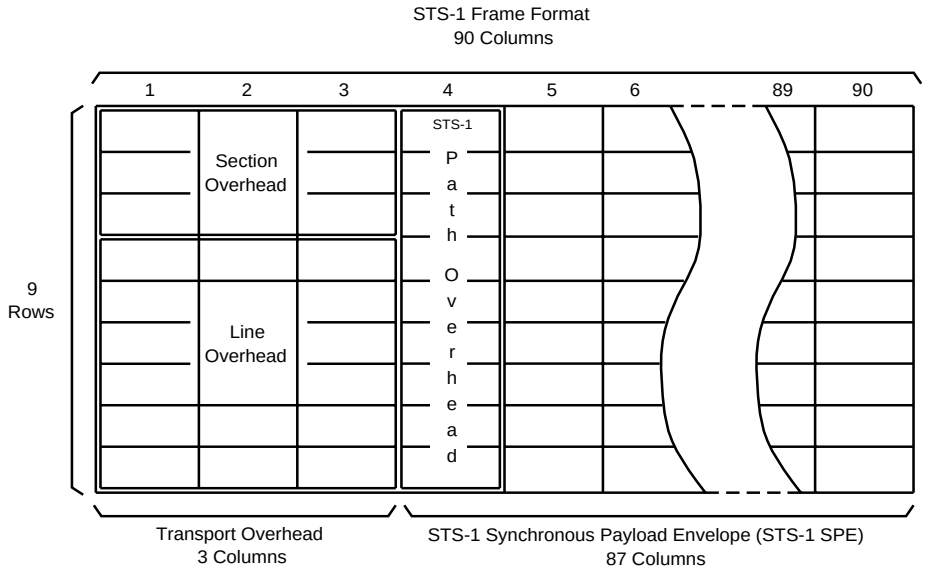

Figure A-1. SONET STS-1 Frame — Simplified Version

SONET Layers

SONET divides its processing functions into three layers. These three layers are associated with equipment that reflects the natural divisions in network spans. Figure A-2 shows these defined layers in a signal path. They include:

- **SECTION** and **Section Terminating Equipment** - the transmission spans between lightwave terminating equipment and the regenerators. The spans between the regenerators are also considered sections. Section terminating equipment provides regenerator functions and terminates the section overhead to provide single-ended operations and section performance monitoring.
- **LINE** and **Line Terminating Equipment** - the transmission span between terminating equipment (STS-1 cross-connections) that provides line performance monitoring. If there are no intervening repeaters, the line terminating equipment also functions as section terminating equipment.
- **STS-1 and VT Path** and **Path Terminating Equipment** - the transmission span for an end-to-end tributary (DS1 or DS3) signal that provides functions including signal labeling and path performance monitoring for signals as they are transported through a SONET network. STS-1 path terminating equipment can also provide cross-connections for lower rate (that is, DS1) signals. A virtual tributary (VT) is a sub-DS3 payload and is described later in more detail.

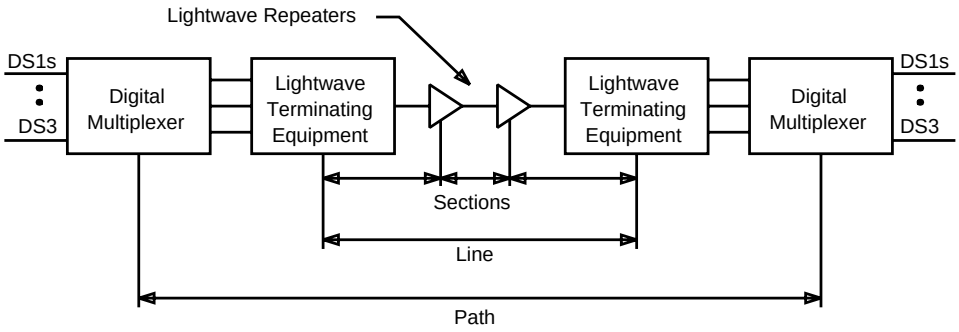

Figure A-2. Section, Line, and Path Definitions

Each SONET layer has a set of overhead bytes as shown in Figure A-3. These bytes carry information used by various network elements.

- **Section Overhead** contains information that is used by all SONET equipment including repeaters.
- **Line Overhead** is used by all SONET equipment except repeaters.
- **Path Overhead** is carried within the payload envelope.
  - — **STS-1 path overhead** remains with the STS-1 SPE until its asynchronous signal is extracted (for example, DS-3) or until its individual VT1.5 signals are demultiplexed.
  - — **VTN (N= 1.5, 2, 3, or 6) path overhead** remains with the VTN until its asynchronous signal is extracted.

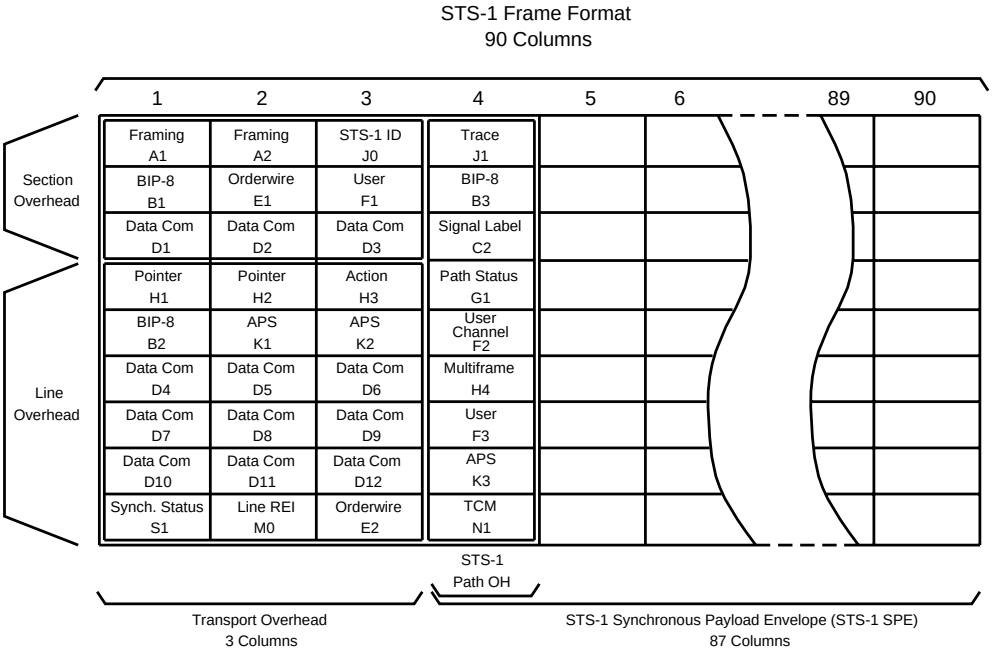

Figure A-3. SONET Frame Format

SONET Frame Structure

The following pages provide more detailed information on the function of various overhead bytes for each SONET layer.

Section Overhead

- Framing (A1, A2)
  - Provides framing for each STS-1.
- STS-1 ID (J0)
  - Provides the order of appearance in a byte-interleaved STS-*N* frame; for example, STS-1 #1, STS-1 #2.....STS-1 #48. In future applications, this byte will provide a section trace function. For information on STS-*N* signals, see the "Higher Rate Transport" part of this section.
- Section Bit-Interleaved Parity (BIP-8) (B1)
  - Provides SECTION performance monitoring and is calculated over all bits of the previous STS-*N* frame. Defined only for STS-1 #1 of an STS-*N* signal.
- Section Orderwire (E1)
  - Provides a local orderwire for voice communication channel between section terminating network elements, such as repeaters. Defined only for STS-1 #1 of an STS-*N* signal.
- Section User Channel (F1)
  - Set aside for the user's purpose. Defined only for STS-1 #1 of an STS-*N* signal.
- Section Data Communications Channel (D1, D2, D3)
  - Is a 192 kb/s message-based channel. Used for alarms, maintenance, control, monitoring, and other communication needs between section terminating equipment. Defined only for STS-1 #1 of an STS-*N* signal.

Line Overhead

- Line Pointer (H1, H2)
  - Two bytes indicate the offset in bytes between the pointer action byte (H3) and the first byte (J1) of the STS-1 synchronous payload envelope (SPE).
- Pointer Action (H3)
  - One byte is allocated for frequency justification.
- Line Bit-Interleaved Parity (BIP-8) (B2)
  - This byte is for line performance monitoring. This byte is provided in all STS-1 signals within an STS-*N* signal.
- Line Automatic Protection Switching (APS) (K1, K2)
  - Two bytes used for APS signaling between line level entities. In addition, bits 6, 7, and 8 of K2 are used for line alarm indication signal (AIS) and line far-end receive failure (FERF). Defined only for STS-1 #1 of an STS-*N* signal.
- Line Data Communications Channel (D4 - D12)
  - Is a 576 kb/s message-based channel.
- Synch. Status (S1)
  - In STS-1 #1, the S1 byte is for synchronization status messages, and only bits 5 through 8 are used.
- Line REI (M0)
  - The M0 byte is for STS-1 line far-end block error (FEBE), and only bits 5 through 8 are used.
- Line Orderwire (E2). Defined only for STS-1 #1 of an STS-*N* signal.
  - One byte is allocated to be used as an express orderwire between line terminating equipment.

Path Overhead

There are two types of path overheads:

— STS-1 path overhead

— VT path overhead.

STS-1 Path Overhead

The STS-1 path overhead is assigned to and remains with the STS-1 SPE until the payload is extracted and is used for functions that are necessary to transport all synchronous payload envelopes.

- STS-1 Path Trace (J1)
  - — Repetitively transmits a 64 byte, fixed length, string so that an STS-1 path receiving terminal can verify its continued connection to the intended transmitter.
- STS-1 Path Bit-Interleaved Parity (BIP-8) (B3)
  - — Provides each STS-1 path performance monitoring. This byte is calculated over all bits of the previous STS-1 SPE before scrambling.
- STS-1 Path Signal Labels (C2)
  - — Indicates the construction of the STS-1 SPE. A value of 00000000 indicates an unequipped STS-1 SPE. Values for various payload mappings are defined in TR-NWT-000253, Issue 2.
- STS-1 Path Status (G1)
  - — Conveys the STS-1 path terminating status, far end block errors (FEBE), and yellow alarm signal conditions back to an originating STS-1 path terminating equipment.
- STS-1 Path User Channel (F2, F3)
  - — User communication channel between Path elements.
- VT Multiframe Indicator (H4)
  - — Provides a general multiframe indicator for VT-structured payloads.
- STS-1 Path Automatic Protection Switching (K3)
  - — Path Automatic Protection Switching
- TCM - Tandem Connection Maintenance (N1)
  - — Bits 1-4 used for incoming error monitoring. Bits 5-8 used as communications channel.

VT Path Overhead

There is one byte of VT path overhead called V5. It occurs on every fourth frame; that is, 2000 times a second.

This byte provides for VT paths the same functions that B3, C2, and G1 provide for STS paths, namely:

- Error checking
- Signal label
- Path status.

The bit assignments of the VT path overhead are specified in the following list and are illustrated in Figure A-4:

— Bits 1 and 2 are used for error performance monitoring (BIP-2).

— Bit 3 is a VT path far-end-block-error (FEBE) indication that is sent back toward an originating VT PTE when errors are detected by the BIP-2.

— Bit 4 and Bit 8 are used for remote defect indication (RDI)

— Bits 5 through 7 provide a VT signal label.

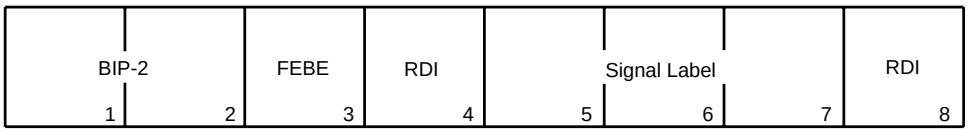

VT Path Signal Label Coding:

0 0 0	Unequipped
0 0 1	Equipped-Nonspecific

Figure A-4. VT Path Overhead Byte

SONET Multiplexing Procedure

SONET has provisions for multiplexing asynchronous DS1s, synchronous DS1s, and asynchronous DS3s. Refer to Figures A-5 and A-6.

The first stage in multiplexing is mapping the input DS1 or DS3 tributary. In the case of DS1 inputs, three time slots (DS0s) are added to the incoming signal thus becoming a VT1.5. An asynchronous DS1 that fully meets the specified rate is mapped into the VT1.5 SPE as clear channel input since no framing is needed.

- Each VT1.5 carries a single DS1 payload.
- Four VT1.5s are bundled into a VT group (VT-G).
- Seven VT-Gs are byte-interleaved into an STS-1 frame.

The VT-G to-STS-1 multiplex is a simple byte-interleaving process, so individual VT signals are easily observable within the STS-1. Thus, cross-connections and add/drop can be accomplished without the back-to-back multiplexing/multiplexing steps required by asynchronous signal formats. The structured VTs are now multiplexed into the STS-1 SPE, and the path, line, and section overhead are added. The final multiplexing, as shown in Figure A-5, provides the scrambled STS-*N* signal to the optical conversion stage.

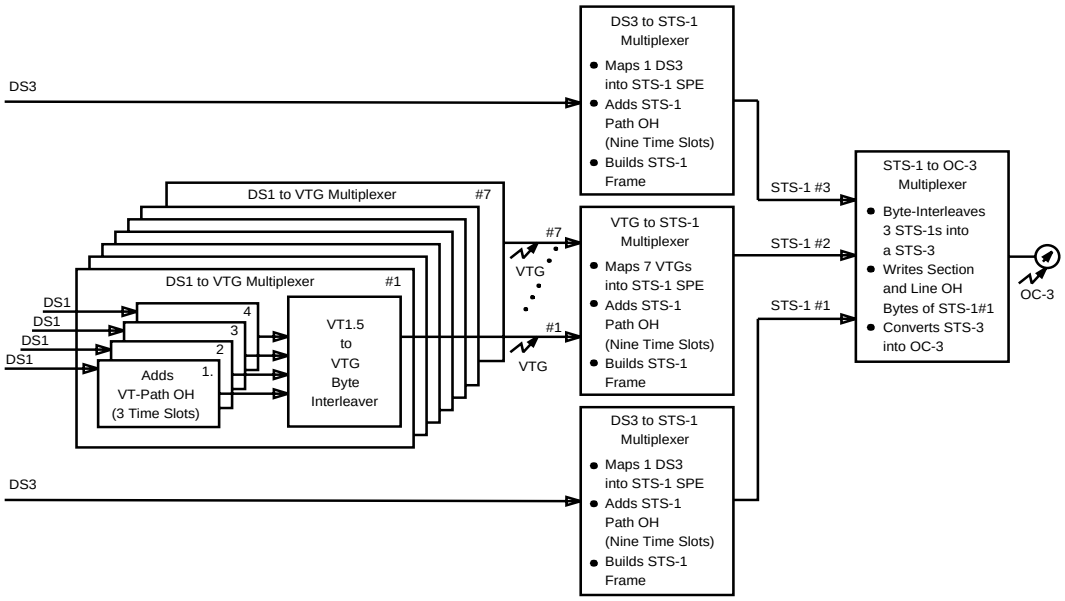

Figure A-5. SONET Multiplexing Procedure

SONET Demultiplexing Procedure

As shown in Figure A-6, demultiplexing is the inverse of multiplexing. The unscrambled STS-1 signal from the optical conversion stages is processed to extract the section and line overhead and accurately locate the SPE. The next stage processes the path overhead and demultiplexes the VTs. A standard DS3 signal will be provided to the asynchronous network after path overhead processing. For DS1 signals, the individual DS1 VTs are then processed to extract VT overhead and, via the VT pointer, accurately locate the DS1 SPE. Finally, desynchronization of the DS1 SPE provides a standard DS1 signal to the asynchronous network.

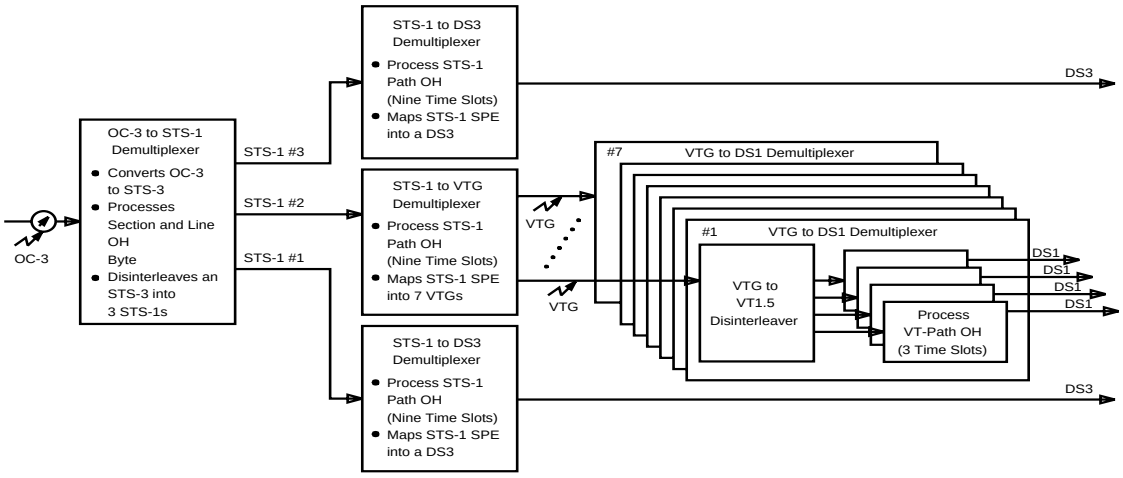

Figure A-6. SONET Demultiplexing Procedure

Two key points should be noted at this time. First, the SONET frame is a fixed time (125 µs) and no bit-stuffing is used. Second, as shown in Figure A-7, the synchronous payload envelope can *float* within the frame using byte-stuffing. This is to permit compensation for small variations in frequency between the clocks of the two systems that may occur if the systems are independently timed (plesiochronous timing). The SPE can also drift across the 125-µs frame boundary. SONET STS pointers are used to locate the SPE relative to the transport overhead.

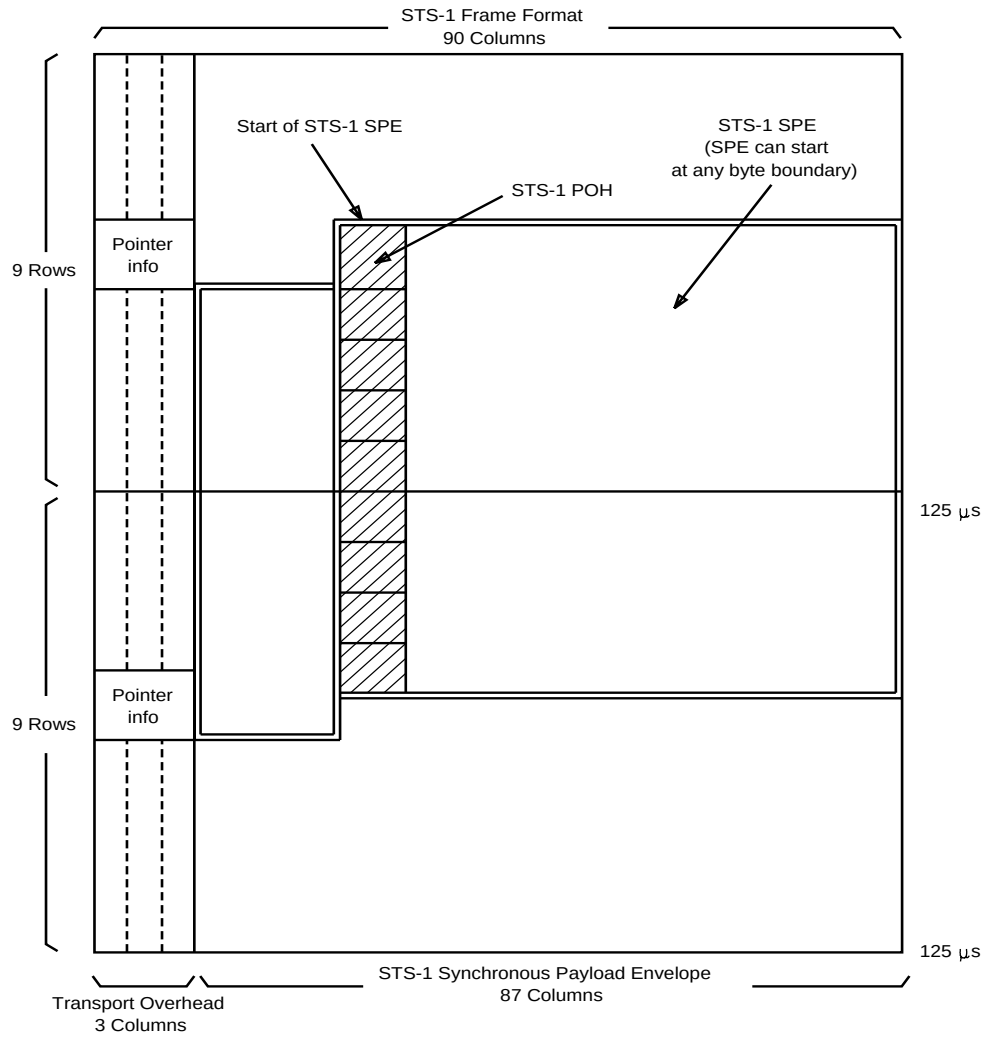

Figure A-7. STS-1 Synchronous Payload Envelope in Interior of STS-1 Frame

SONET Digital Multiplexing Schemes

Asynchronous Multiplexing

Currently, fiber optic facilities are primarily used to carry DS3 signals. The DS3 signal consists of a combination of the following payload signals:

- 28 DS1s
- 14 DS1Cs
- 7 DS2s.

Typically, 28 DS1 signals are multiplexed into a DS3 signal, using an M13 format. Refer to Figure A-8. M13 format is a process that includes bit-interleaving four DS1 into a DS2 signal and then bit-interleaving seven DS2 signals into a DS3. The DS3 rate is not a direct multiple of the DS1 or the DS2 rates due to the bit-stuffing synchronization technique used in asynchronous multiplexing.

Identification of DS0s contained in any DS-*N* signal, except DS1, is complex and DS0s cannot be directly extracted. Thus, an asynchronous DS3 signal must be demultiplexed down to the DS1 level to access and cross-connect DS0 and DS1 signals.

Another disadvantage of the M13 format is there is no end-to-end overhead channel for use by OAM&P groups.

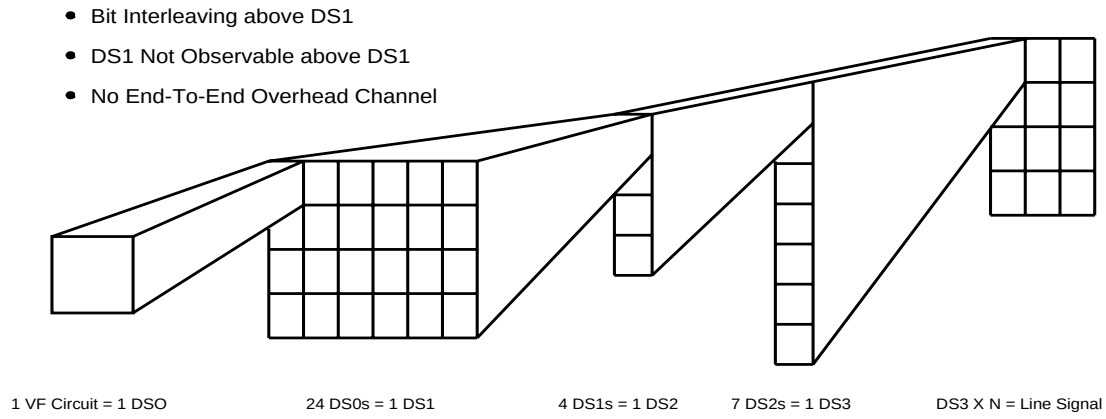

Figure A-8. Asynchronous Multiplexing

Synchronous Multiplexing

SONET's method of *byte-interleaving* DS1s to a higher signal rate permits economical extraction of a single DS1 without the need to demultiplex the entire STS-1 SPE. In addition, SONET provides overhead channels for use by OAM&P groups.

In SONET, a single asynchronous DS3 signal is mapped into an STS-1 SPE (Figure A-9).

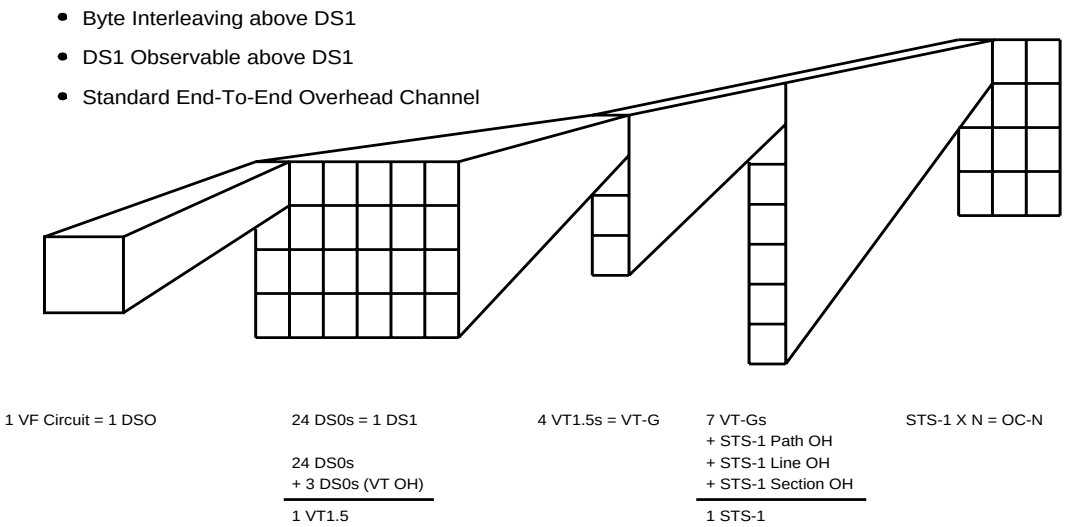

Figure A-9. Synchronous Multiplexing

Virtual Tributary Signals

Sub-DS3 asynchronous signals (DS1, DS1C, DS2 and E1) are *byte-interleaved* into a digital signal called a virtual tributary (VT). The VT is a structure designed for the transport and switching of sub-DS3 payloads. Like the STS-1 signal, the VT signal has a floating pointer that allows each VT SPE to move within the VT structure. There are four sizes of virtual tributaries (VT1.5, VT2, VT3, VT6). Higher rate payloads are transported as one or more concatenated STS-1 signals.

Concatenated Mode

For services requiring multiples of the STS-1 rate, STS-1 path payloads may be shared to create a single broadband payload called a concatenated STS-*N*c (OC-*N*c). STS-1 signals are mapped into an STS-*N*c SPE and transported as a concatenated STS-*N*c signal. This STS-*N*c signal can be carried by an STS-*N* or OC-*N* (or higher level) line signal.

The STS-*N* signal is multiplexed, switched, and transported through the network as a single entity. A concatenation indicator, used to show that the STS-1s of the STS-*N*c signal are linked together, is contained in the STS-1 payload pointer of all but the first STS-1. The line and section overhead is sent on the first STS-1 and the payload pointer for the first STS-1 is applied to all STS-1 signals in the concatenated signal.

Figure A-10 shows an example of an STS-3c SPE. It consists of 3 x 87 columns and 9 rows of bytes. The order of transmission is row by row, from left to right.

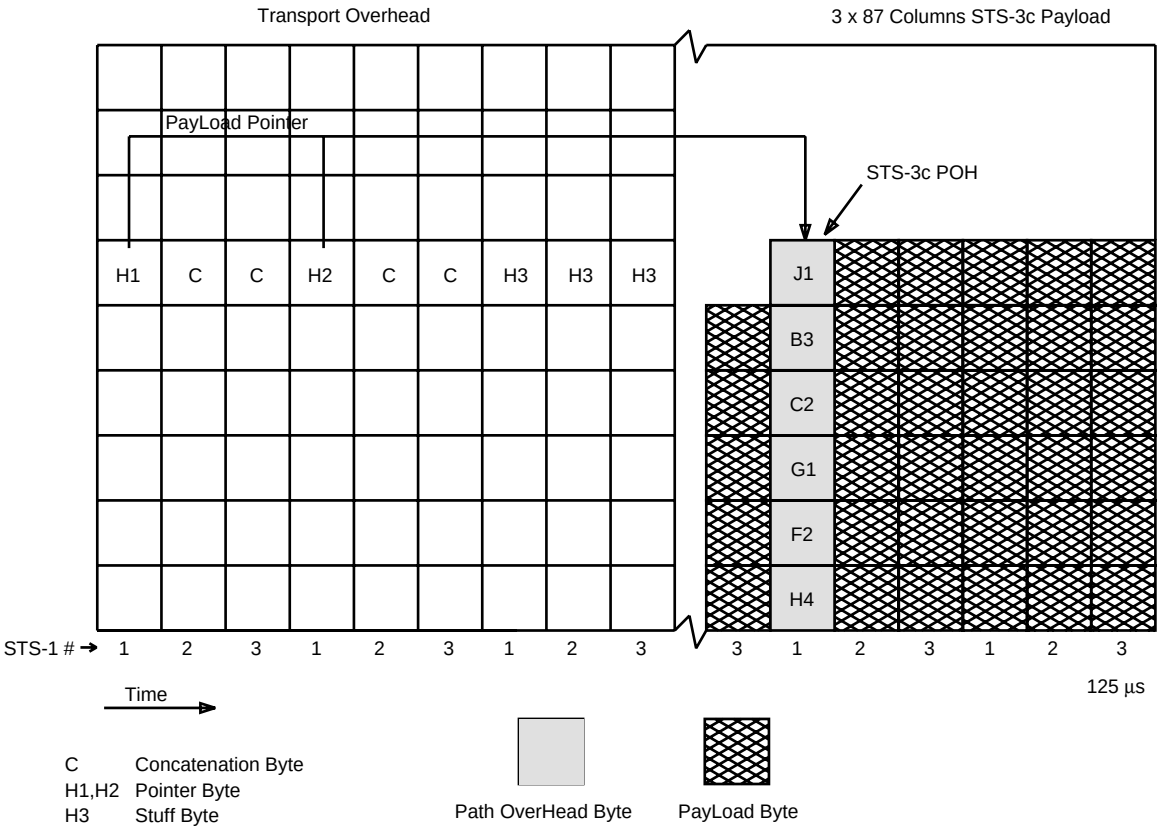

Figure A-10. STS-3c Concatenated Payload

SONET Interface

The SONET interface (Figure A-11) provides the optical midspan meet between SONET network elements. A SONET network element is the hardware and software that processes one or more layers of the SONET signal.

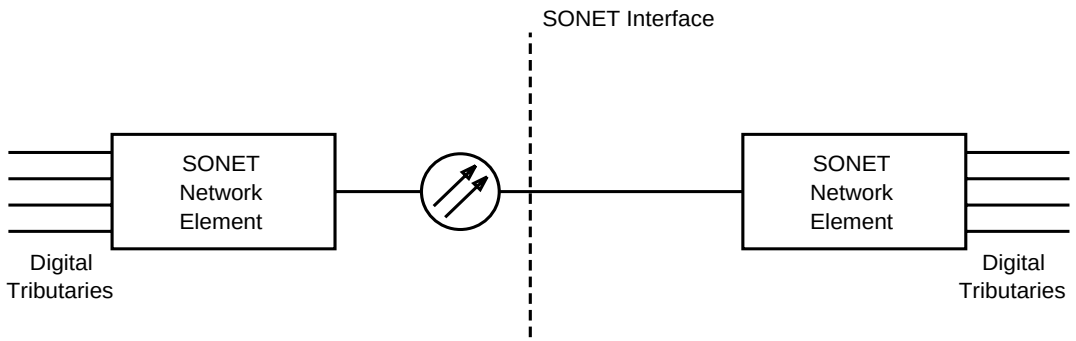

Standard optical interconnect at SONET interface

Family of standard rates at N X 51.84 Mb/s
[Synchronous Transport Signal (STS-1)]

Overhead channels defined for interoffice operations
and maintenance functions

Figure A-11. SONET Interface

SONET Payloads

Table A-1 shows the digital signals that can be transported as SONET payloads.

Table A-1. SONET Payloads

Input Tributary	Equivalent Channels	Rate	SONET Signal	Rate
DS1	24 DS0s	1.544 Mb/s	VT1.5	1.728 Mb/s
E1 (CEPT)	32 DS0s	2.048 Mb/s	VT2	2.304 Mb/s
DS1C	48 DS0s	3.152 Mb/s	VT3	3.456 Mb/s
DS2	96 DS0s	6.312 Mb/s	VT6	6.912 Mb/s
DS3	672 DS0s	44.736 Mb/s	STS-1	51.840Mb/s
DS4NA	2016 DS0s	139.624 Mb/s	STS-3c	150.336Mb/s
ATM		149.76 Mb/s	STS-3c	150.336Mb/s
FDDI		125.00 Mb/s	STS-3c	150.336Mb/s
Future payloads		up to 150 Mb/s		
Future broadband payloads		Greater than 150 Mb/s		

DS1 and DS3 signals are the most important of these signals in the current network. Broadband payloads, such as asynchronous transfer mode (ATM) and fiber distributed data interface (FDDI), with rates of 150 Mb/s and higher, are also important. Other payloads may be defined for specific applications.

Higher Rate Transport

Higher rate SONET signals are created by byte-interleaving *N* STS-1 to form an STS-*N* signal. The STS-*N* is then scrambled and converted to an optical carrier - level *N* (OC-*N*) signal. The OC-*N* has a line rate of exactly *N* times the OC-1 signal (see Table A-2).

Table A-2. SONET Transport Rates

OC Level	Line Rate (Mb/s)	Capacity
OC-1	51.84	28 DS1s or 1 DS3
OC-3	155.52	84 DS1s or 3 DS3s
OC-9	466.56	252 DS1s or 9 DS3s
OC-12	622.08	336 DS1s or 12 DS3s
OC-18	933.122	504 DS1s or 18 DS3s
OC-24	1244.16	672 DS1s or 24 DS3s
OC-36	1866.24	1008 DS1s or 36 DS3s
OC-48	2488.32	1344 DS1s or 48 DS3s

Conclusion

The intent of this section is to present a short overview of SONET. More detailed expositions can be found in various literature. An excellent description of SONET can be found in Reference 3.

REFERENCES

1. ANSI T1.106-1988 •American National Standard for Telecommunications - Digital Hierarchy Optical Interface Specifications, Single Mode,• and ANSI T1.105-1991 •American National Standard for Telecommunications - Digital Hierarchy Optical Rates and Formats Specification.•
2. CCITT Recommendations G.707, G.708, G.709.
3. R. Ballert and Y. C. Ching, •SONET: Now It's the Standard Optical Network,• *IEEE Communications Magazine*, Vol. 27, No. 3 (March 1989): 8-15.
4. ANSI T1.102-1993 Draft •American National Standard for Telecommunications - Digital Hierarchy Electrical Interface Specifications.•

Glossary

0x1
See Ring (0x1) Low-Speed Interface.

1+1
The 1+1 protection switching architecture protects against failures of the optical transmit/receive equipment and their connecting fiber facility. One bidirectional interface (two fibers plus associated OLIUs on each end) is designated "service," and the other is designated "protection." In each direction, identical signals are transmitted on the service and protection lines ("dual-fed"). The receiving equipment monitors the incoming service and protection lines independently, and selects traffic from one line (the "active" line) based on performance criteria and technician/OS control. In 1+1 both service and protection lines could be active at the same time. Also referred to as linear (1+1) low speed interface.

1xN, 1x1
1xN protection switching pertains to circuit pack protection that provides a redundant signal path through the DDM-2000 (it does not cover protection switching of an optical facility; see "1+1"). In 1xN switching, a group of N service circuit packs share a single spare protection circuit pack. 1x1 is a special case of 1xN, with N=1. In 1x1 only one is active at a time.

2B1Q
2 - Binary, 1 - Quaternary. This means that the input voltage level can be one of 4 distinct levels (**Note:** 0 Volts is not a valid voltage under this scheme). These levels are called Quaternaries. Each quaternary represents 2 data bits, since there are 4 possible ways to represent 2 bits.

A

ABN
Abnormal (status condition)

ACO
Alarm Cutoff — A pushbutton switch available on the user panel that can be used to retire an audible office alarm.

ACO/TST
Alarm Cutoff and Test — The name of a pushbutton on the user panel.

Active
Active identifies a 1+1 protected OC-N line which is currently selected by the receiver at either end as the payload carrying signal or a 1x1 or 1xn protected circuit pack that is currently carrying service. (See Standby.)

ADM
Add/Drop Multiplexer

AGNE
Alarm Gateway Network Element — A defined NE in an alarm group through which members of the alarm group exchange information.

AIS
Alarm Indication Signal — A code transmitted downstream in a digital network that shows that an upstream failure has been detected and alarmed.

AMI
Alternate Mark Inversion — A line code that employs a ternary signal to convey binary digits, in which successive binary ones are represented by signal elements that are normally of alternating, positive and negative polarity but equal in amplitude, and in which binary zeros are represented by signal elements that have zero amplitude.

ANSI
American National Standards Institute

APS
Automatic Protection Switch

ARM
Access Resource Module

AS&C
Alarm, Status, and Control

ASCII
American Standard Code for Information Interchange — A standard 8-bit code used for exchanging information among data processing systems and associated equipment.

ASN.1
Abstract Syntax Notation 1

ASNE
Alarm Server Network Element

ATM
Asynchronous Transfer Mode

Auto
Automatic — One possible state of a DS1 or DS3 port. In this state, the port will automatically be put "in service" if a good signal is detected coming from the DSX panel.

Automatic Protection Switch
A protection switch that occurs automatically in response to an automatically detected fault condition.

Automatic Synchronization Reconfiguration
A feature that allows another synchronization source to be automatically selected and the synchronization source provisioning to be automatically reconfigured in the event of a synchronization source failure or network synchronization change, for example, a fiber cut.

AUXCTL
Auxiliary Control — The name of the slot to the left of the SYSCTL slot on the DDM-2000 OC-3 and FiberReach wideband shelves and to the right of the SYSCTL slot on the DDM-2000 OC-12 shelf.

Available Time
In performance monitoring, the 1-second intervals.

B

B3ZS
Bipolar 3-Zero Substitution — A line coding method that replaces a string of three zeros with a sequence of symbols having some special characteristic.

B8ZS
Bipolar 8-Zero Substitution — A line coding method that replaces a string of eight zeros with a sequence of symbols having some special characteristic.

Backbone Ring
A host ring

BDFB
Battery Distribution and Fuse Bay

BER
Bit Error Ratio — The ratio of bits received in error to the total bits sent.

BIP
Bit Interleaved Parity — A method of error monitoring over a specified number of bits, that is, BIP-3 or BIP-8.

BITS
Building Integrated Timing Supply — A single clock that provides all the DS1 and DS0 synchronization references required by clocks in a building.

BRI
Basic Rate Interface

Broadband
Any communications channel with greater bandwidth than a voice channel; sometimes used synonymously with wideband.

C

CC
Clear Channel — A provisionable mode for the DS3 output that causes parity violations not to be monitored or corrected before the DS3 signal is encoded.

CCITT
International Telephone and Telegraph Consultative Committee — An international advisory committee under United Nations' sponsorship that has composed and recommended for adoption worldwide standards for international communications. Recently changed to the International Telecommunications Union Telecommunications Standards Sector (ITU-TSS).

CD-ROM
Compact Disk, Read Only Memory

CDTU
Channel and Drop Test Unit

CEV
Controlled Environment Vault

Channel
A logical signal within a port. For example, for an EC-1 port, there is one STS-1 channel and sometimes 28 VT1.5 channels. See Port.

Channel State Provisioning
A feature that allows a user to suppress reporting of alarms and events during provisioning by supporting multiple states (automatic, in-service and not monitored) for VT1.5 and STS-1 channels. See Port State Provisioning.

CIT
Craft Interface Terminal

CLF
Carrier Line Failure Status

CLK
Clock

CMISE
Common Management Information Service Element

CMOS
Complementary Metal Oxide Semiconductor

CO
Central Office

COT
Central Office Terminal

CP
Circuit Pack

CPE
Customer Premises Equipment

CR
Critical (alarm status)

CSA
Carrier Serving Area

CSU
Channel Service Unit

CS&O
Customer Support and Operations

CV
Coding Violation (a performance-monitoring parameter)

CVFE
Coding Violation Far-End — An indication returned to the transmitting terminal that an errored block has been detected at the receiving terminal.

D

DACS III-2000
Digital Access and Cross-Connect System that provides clear channel switching at either the DS3 or the STS-1 rates, eliminating the need for manual DSXs.

DACS IV-2000
Digital Access and Cross-Connect System that provides electronic DS3/STS-1 or DS1/VT1.5 cross-connect capability, eliminating the need for manual DSXs.

DCC
Data Communications Channel — The embedded overhead communications channel in the SONET line. It is used for end-to-end communications and maintenance. It carries alarm, control, and status information between network elements in a SONET network.

DCE
Data Communications Equipment — In a data station, the equipment that provides the signal conversion and coding between the data terminal equipment (DTE) and the line. The DCE may be separate equipment or an integral part of the DTE or of intermediate equipment. A DCE may perform other functions usually performed at the network end of the line.

DDM-Plus
Lucent’s optical and electrical DS1 transport system. DDM-Plus transports up to four DS1s per pair of optical fiber and can provide T1 extension over existing copper wires.

DDM-1000
Lucent's Dual DS3 Multiplexer — A digital multiplexer that multiplexes DS1, DS1C, or DS2 signals into a DS3 signal or a 90 Mb/s or 180 Mb/s optical signal.

DDM-2000
Lucent's next generation network multiplexers that multiplex DS1, DS3, or EC-1 inputs into EC-1, OC-1, OC-3, or OC-12 outputs.

Default Provisioning
The parameter values that are preprogrammed as shipped from the factory.

Demultiplexing
A process applied to a multiplexed signal for recovering signals combined within it and for restoring the distinct individual channels of these signals.

DEMUX
Demultiplexer — "The DEMUX direction" is from the fiber toward the DSX.

Digital Multiplexer
Equipment that combines by time-division multiplexing several digital signals into a single composite digital signal.

DLC
Digital Loop Carrier

DPLL
Digital Phase-Locked Loop

DRI
Dual Ring Interworking — Two ring networks interconnected at two common nodes.

Drop and Continue
A technique that allows redundant signal appearances at two central offices in a DRI network, allowing protection against central office failures.

DS1
Digital Signal Level 1 (1.544 M/bs)

DS1 Circuit Pack
The DS1 interface circuit pack interfaces to the DSX-1 panel.

DS3
Digital Signal Level 3 (44.736 M/bs)

DS3 Circuit Pack
The DS3 circuit pack interfaces to the DSX-3 panel.

DSn
Digital Signal Rate n — One of the possible digital signal rates at DDM-2000 OC-3 and OC-12 interfaces: DS1 (1.544 Mb/s) or DS3 (44.736 Mb/s).

DSNE
Directory Services Network Element — A designated network element that is responsible for administering a database that maps network element names (TIDs) to addresses [NSAPs (network service access points)] in an OSI subnetwork. There can be one DSNE per ring. There can also be a GNE.

DSX
Digital Cross-Connect Panel — A panel designed to interconnect equipment that operates at a designated rate. For example, a DSX-3 interconnects equipment operating at the DS3 rate.

DSXBIU
Digital Signal Cross-Connect Backplane Interface Unit

DT
Distant Terminal

DTE
Data Terminating Equipment — That part of a data station that serves as a data source (originates data for transmission), a data sink (accepts transmitted data), or both.

Dual 0x1 Cross-Connection
In a single-homed application, the DDM-2000 OC-3/OC-12 Multiplexer uses a dual 0x1 cross-connection to map the VT1.5 channels between the DDM-2000 FiberReach OC-3 and the DDM-2000

OC-12 rings. This dual 0x1 architecture means that the VT1.5 path switching is one in the DDM-2000 FiberReach and not in the host DDM-2000. Individual DS1 signals within an STS-1 can therefore be dropped to DDM-2000 OC-3 shelves at several nodes around the ring. See Single 0x1.

Dual Homing
In DDM-2000 FiberReach, a network topology in which two OC-3 shelves serve as DDM-2000 FiberReach Multiplexer hosts supporting up to twelve OC-1 rings. Each DDM-2000 FiberReach Multiplexer ring is interconnected between the two separate hosts. Two *SLC*-2000 Access Systems serving as DDM-2000 FiberReach hosts can support up to four OC-1 rings. See Single Homing.

E

EC-1, EC-n
Electrical Carrier — The basic logical building block signal with a rate of 51.840 Mb/s for an EC-1 signal and a rate of n times 51.840 Mb/s for an EC-n signal. An EC-1 signal can be built in two ways: A DS1 can be mapped into a VT1.5 signal and 28 VT1.5 signals multiplexed into an EC-1 (VT1.5 based EC-1), or a DS3 can be mapped directly into an EC-1 (DS3 based EC-1).

ECI
Equipment Catalog Item — The bar code number on the faceplate of each circuit pack used by some inventory systems.

EEPROM
Electrically Erasable Programmable Read-Only Memory

EIA
Electronic Industries Association

EMC
Electromagnetic Compatibility

EMI
Electromagnetic Interference

EOOF
Excessive Out of Frame

EPROM
Erasable Programmable Read-Only Memory

EQ
Equipped (memory administrative state)

ES
Errored Seconds — A performance monitoring parameter. ES "type A" is a second with exactly one error; ES "type B" is a second with more than one and less than the number of errors in a severely errored second for the given signal. ES by itself means the sum of the type A and type B ESs.

ESD
Electrostatic Discharge

ESF
Extended Super Frame (format for DS1 signal)

EST
Environmental Stress Testing

F

FCC
Federal Communications Commission

FDDI
Fiber Distribution Data Interface

FE
Far-End — Any other network element in a maintenance subnetwork other than the one the user is at or working on. Also called remote.

FE-ACTY
Far End Activity — An LED on the user panel.

FEBE
Far End Block Error — An indication returned to near-end transmitting node that an errored block has been detected at the far end.

FE ID
Far End Identification — The 7-segment display on the faceplate of the SYSCTL circuit pack.

FEPROM
Flash EPROM — A new technology that combines the non-volatility of EPROM with the in-circuit reprogrammability of EEPROM (electrically-erasable PROM.)

FERF
Far-End Receive Failure — An indication returned to a transmitting terminal that the receiving terminal has detected an incoming section failure.

FE SEL
Far End Select — An LED on the user panel.

FIT
Failures in /10^9 hours of operation.

Free Running
An operating condition of a clock in which its local oscillator is not locked to an internal synchronization reference and is using no storage techniques to sustain its accuracy.

FT-2000
Lucent's SONET OC-48 Lightwave System

Function Unit
Refers to any one of a number of different circuit packs that can reside in the A, B, or C function unit slots on the DDM-2000 OC-3 Multiplexer, or in the A, B, C, or D function unit slots of the DDM-2000 OC-12 Multiplexer.

G

GCNS-2000
Lucent's Gigabit Cell Network Switch

GNE
Gateway Network Element — A network element that has an active X.25 link. Can also be a DSNE.

GR
Telcordia Technologies General Requirement

Group
The eight slots that may be equipped.

GTP
General Telemetry Processor

GUI
Graphical User Interface

H

Hairpin Routing
A cross-connection between Function Units; for example, Function Unit C to Function Units A or B. Cross-connections go through Main, but no bandwidth or time slots are taken from the backbone ring. Eliminates need for another shelf.

HDSL
High Data Rate Digital Subscriber Line

HECI
Humans Equipment Catalog Item

Holdover
An operating condition of a network element in which its local oscillator is not locked to any synchronization reference but is using storage techniques to maintain its accuracy with respect to the last known frequency comparison with a synchronization reference.

I

IC
Internal Clock — Used in synchronization messaging.

ID
Identifier — See Shelf ID and Site ID.

IEC
International Electrotechnology Commission

IMF
Infant Mortality Factor

INC
Incoming Status

INCM
A parallel telemetry point used to indicate incoming low-speed failures.

I/O
Input/Output

IP
Internetwork Protocol

IR
Intermediate Reach — A term used to describe distances of from 15 to 40 km between optical transmitter and receiver without regeneration. See LR (Long Reach).

IS
In Service — One possible state of a DS1, DS3, or EC-1 port. Other possible states are "auto" (automatic) and "nmon" (not monitored).

ISCI
Intershelf Control Interface

ISI
Intershelf Interface

ISDN
Integrated Services Digital Network

IS-3
An intraoffice short reach proprietary interface provided by the 21D/21D-U and 22D-U optical line interface units.

ISO
International Standards Organization — See OSI.

ITU-TSS
International Telecommunication Union — Telecommunication Standardization Sector

IVHS
Intelligent Vehicle Highway System

J

Jitter
Timing jitter is defined as short-term variations of the significant instants of a digital signal from their ideal positions in time.

L

LAN
Local Area Network

LAPD
Link Access Procedure "D"

LBO
Line Build Out — An equalizer network between the DDM-2000 OC-3 and OC-12 Multiplexers and the DSX panel. It guarantees the proper signal level and shape at the DSX panel.

LCN
Local Communications Network

LEC
Local Exchange Carrier

LED
Light Emitting Diode — Used on a circuit pack faceplate to show failure (red) or service state. It is also used to show the alarm and status condition of the system.

Line Timing
The capability to directly derive clock timing from an incoming OC-N signal while providing the user the capability to provision whether switching to an alternate OC-N from a different source (as opposed to entering holdover) will occur if the OC-N currently used as the timing reference for that NE becomes unsuitable as a reference. For example, intermediate nodes in a linear network are line timed. See Loop Timing.

Local
See NE (Near-End).

Locked Cross-Connection
This is a variation of the ring cross-connection that allows the user to lock the path selector to a specified rotation of the ring. Any signal received from the other rotation of the ring is ignored.

LOF
Loss of Frame — A failure to synchronize to an incoming signal.

Loop Timing
Loop timing is a special case of line timing. It applies to NEs that have only one OC-N interface. For example, terminating nodes in a linear network are loop timed. See Line Timing.

LOP
Loss of Pointer — A failure to extract good data from an STS-1 payload.

LOS
Loss of Signal — The complete absence of an incoming signal.

LR
Long Reach — A term used to describe distances of 40 km or more between optical transmitter and receiver without regeneration. See IR (Intermediate Reach).

LS
Low Speed

M

Main
Slots on the DDM-2000 shelf in which the OLIU circuit packs are installed.

Maintenance Subnetwork
A maintenance subnetwork consists of a CO (or gateway network element), a local DDM-2000 and all remote DDM-2000s connected via SONET DCC that are enabled.

Midspan Meet
The capability to interface between two lightwave terminals of different vendors. This applies to high-speed optical interfaces.

MD
Mediation Device

MJ
Major Alarm

MM
Multimode

MML
huMan-Machine Language defined by ITU-TSS, formerly CCITT.

MN
Minor Alarm

MPEG
Moving Picture Experts Group

MSDT
Multi-Services Distant Terminal

MTBF
Mean Time Between Failures

MTBMA
Mean Time Between Maintenance Activities

Multiplexing
The process of combining several distinct digital signals into a single composite digital signal.

Mult
Multiplying — The cascading of signals in a bay. In the MULT mode, the DS1 external reference can be cascaded to other shelves in a bay using Mult cables. Normally starting with the bottom shelf (Number 1) and working towards the top of the bay.

MUX
Multiplex

MXBIU
Multiplexer and Backplane Interface Unit

MXRVO Circuit Pack
The MXRVO circuit pack multiplexes seven VT-G signals from the DS1 circuit packs to an STS-1 signal for connection to the OLIU circuit packs.

N

NE
Near-End — The network element the user is at or working on. Also called local.

NE
Network Element — The basic building block of a telecommunications equipment within a telecommunication network that meets SONET standards. Typical internal attributes of a network element include: one or more high- and low-speed transmission ports, built-in intelligence, synchronization and timing capability, access interfaces for use by technicians and/or operation systems. In addition, a network element may also include a time slot interchanger.

NE-ACTY
Near End Activity — An LED on the user panel.

NEBS
Network Equipment-Building System

nm
Nanometer (10^{-9} meters)

NMA
Network Monitoring and Analysis — An operations system designed by Telcordia Technologies which is used to monitor network facilities.

NMON
Not Monitored — A provisioning state for equipment that is not monitored or alarmed.

NMLI
Native Mode LAN Interface external to the DDM-2000 FiberReach multiplexer.

Node
In SONET a node is a line terminating element.

Non-Revertive
A protection switching mode in which, after a protection switch occurs, the equipment remains in its current configuration after any failure conditions that caused a protection switch to occur clear or after any external switch commands are reset. (See Revertive.)

NRZ
Nonreturn to Zero

NSA
Not Service Affecting

NSAP
Network Services Access Point — An address that identifies a network element. Used for maintenance subnetwork communication using the OSI protocol.

NTF
No Trouble Found

O

OAM&P
Operations, Administration, Maintenance, and Provisioning

OC, OC-n
Optical Carrier — The optical signal that results from an optical conversion of an STS signal; that is, OC-1 from STS-1 and OC-n from STS-n.

OC-1
Optical Carrier Level 1 Signal (51.84 Mb/s)

OC-3
Optical Carrier Level 3 Signal (155 Mb/s)

OC-3c (STS-3c)
Optical Carrier Level 3 Concatenated Signal — Low-speed broadband signal equivalent to three STS-1s linked together with a single path overhead.

OC-12
Optical Carrier Level 12 Signal (622 Mb/s)

OHCTL
The overhead controller circuit pack provides user access to the SONET overhead channels.

OLIU
Optical Line Interface Unit

OOF
Out of Frame

OOL
Out of Lock

Operations Interface
Any interface that provides information on the system performance or control. These include the equipment LEDs, user panel, CIT, office alarms, and all telemetry interfaces.

OPS/INE
Operations System/Intelligent Network Element

OS
Operations System — A central computer-based system used to provide operations, administration, and maintenance functions.

OSMINE
Operations Systems Modifications for the Integration of Network Elements

OSI
Open Systems Interconnection — Referring to the OSI reference model, a logical structure for network operations standardized by the International Standards Organization (ISO).

OSGNE
Operations System Gateway Network Element — An OSGNE serves as a single interface to the OS for NEs in the same subnetwork using X.25 interfaces.

OSP
Outside Plant

P

Pass Through
Paths that are cross-connected directly across an intermediate node in a ring network.

P-bit
Performance Bit

PC
Personal Computer

PCU
Power Converter Unit

PID
Program Identification

PINFET
Positive Intrinsic Negative Field Effect Transistor

PJC
Pointer Justification Count

Plesiochronous Network
A network that contains multiple maintenance subnetworks, each internally synchronous and all operating at the same nominal frequency, but whose timing may be slightly different at any particular instant. For example in SONET networks, each timing traceable to their own Stratum 1 clock are considered plesiochronous with respect to each other.

PLL
Phased-Locked Loop

PM
Performance Monitoring — Measures the quality of service and identifies degrading or marginally operating systems (before an alarm would be generated).

PMN
Power Minor Alarm

POH
Path Overhead

POP
Points of Presence

Port
The physical, electrical, or optical interface on a system. For example, DS1, DS3, EC-1, OC-3, and OC-12. See Channel.

Port State Provisioning
A feature that allows a user to suppress alarm reporting and performance monitoring during provisioning by supporting multiple states (automatic, in-service and not monitored) for low speed ports. See Channel State Provisioning.

POTS
Plain Old Telephone Service

Proactive Maintenance
Refers to the process of detecting degrading conditions not severe enough to initiate protection switching or alarming, but indicative of an impending signal fail or signal degrade defect (for example, performance monitoring).

Protection Line
As defined by the SONET standard, the protection line is the pair of fibers (one transmit and one receive) that carry the SONET APS channel (K1 and K2 bytes in the SONET line overhead). On a DDM-2000 FiberReach system, a *protection* line is a pair of fibers that terminate on an OLIU circuit pack in the `main` slot. (See Service Line.)

PRM
Performance Report Message

PROTN
Protection

Product Family 2000
Lucent's line of SONET standard network products providing total network solutions.

PRS
Primary Reference Source

PSU
Power Supply Unit

PVC
Permanent Virtual Circuit

PWR
Power

R

RAM
Random Access Memory

Reactive Maintenance
Refers to detecting defects/failures and clearing them.

Remote
See FE (Far-End).

REN
Ringer Equivalent Number

Revertive
A protection switching mode in which, after a protection switch occurs, the equipment returns to the nominal configuration (that is, the service equipment is active, and the protection equipment is standby) after any failure conditions that caused a protection switch to occur clear or after any external switch commands are reset. (See Non-Revertive.)

RGU
Ringing Generator Unit

Ring
A configuration of nodes comprised of network elements connected in a circular fashion. Under normal conditions, each node is interconnected with its neighbor and includes capacity for transmission in either direction between adjacent nodes. Path switched rings use a head-end bridge and tail-end switch. Line switched rings actively reroute traffic over a protection line.

Ring (0x1) Low Speed Interface
Formerly referred to as dual 0x1 or single 0x1. In ring applications, the DDM-2000 OC-3 and OC-12 Multiplexers use a 0x1 interface meaning both fibers carry service as opposed to a linear (1+1) low speed interface where one fiber is used for service and the other for protection. See 1+1.

RPP
Reliability Prediction Procedure — Described in Telcordia Technologies TR-NWT-00032.

RT
Remote Terminal — An unstaffed equipment enclosure that may have a controlled or uncontrolled environment.

RTAC
Lucent's Regional Technical Assistance Center (1-800-225-RTAC)

RZ
Return to Zero

S

SA
Service Affecting

SCADA
Supervisory Control and Data Acquisition

SD
Signal Degrade

SDH
Synchronous Digital Hierarchy

Self-Healing
Ring architecture in which two or more fibers are used to provide route diversity. Node failures only affect traffic dropped at the failed node.

SEFS
Severely Errored Frame Seconds

SEO
Single-Ended Operations — The maintenance capability that provides remote access to all DDM-2000 systems from a single location over the DCC.

Service Line
On a DDM-2000 FiberReach system, a service (or "working") line is a pair of fibers (one transmit and one receive) that terminate on an OLIU circuit pack in the **`main`** slot. As defined by the SONET standard, the SONET APS channel is not defined on a service (or "working") line. (See Protection Line.)

SES
Severely Errored Seconds — This performance monitoring parameter is a second in which a signal failure occurs, or more than a preset amount of coding violations (dependent on the type of signal) occurs.

SF
Super Frame (format for DS1 signal)

Shelf ID
A switch settable parameter with values of from 1 to 8. Used to log into a selected shelf in a bay using the CIT.

SID
System Identification

Single 0x1 Cross-Connection
In a dual-homed application, the DDM-2000 OC-3/OC-12 Multiplexer uses a single 0x1 cross-connection to map the VT1.5 channels between the DDM-2000 FiberReach OC-1 and the DDM-2000 OC-3/OC-12 rings. This single 0x1 architecture maps low speed to high speed on a specified ring rotation. The high speed to low speed drop is made on the same specified ring with no path switching. Protection is provided at the VT1.5 end points. See Dual 0x1.

Single Homing
In DDM-2000 FiberReach, a network topology in which a single OC-3 shelf serves as a DDM-2000 FiberReach Multiplexer host supporting up to six OC-1 rings. A *SLC*-2000 Access System serving as a host can support up to two OC-1 rings. See Dual Homing.

Site ID
A switch settable parameter with values of from 1 to 8. Displayed on SYSCTL circuit pack to indicate to which site the user panel alarms and LEDs apply.

SLIM
Subscriber Loop Interface Module

SM
Single Mode

SONET
Synchronous Optical Network

SPE
Synchronous Payload Envelope

SPOTS
Super POTS

SQU
Sync Quality Unknown. Used in synchronization messaging.

SRD
Software Release Description

Standby
Standby identifies a 1+1 protected OC-N line which is not currently selected by the receiver at either end as the payload carrying signal, or a 1x1 or 1xn protected circuit pack that is not currently carrying service. (See Active.)

Star Topology
For DDM-2000 FiberReach, this refers to a configuration of multiple point-to-point OC-1 extensions from a single DDM-2000 OC-3/OC-12 Multiplexer.

Status
The indication of a short-term change in the system.

STS, STS-n
Synchronous Transport Signal — The basic logical building block signal with a rate of 51.840 Mb/s for an STS-1 signal and a rate of n times 51.840 Mb/s for an STS-n signal.

STS-1 SPE
STS-1 Synchronous Payload Envelope — A 125-microsecond frame structure composed of STS path overhead and the STS-1 payload.

STS-3c
Synchronous Transport Level 3 Concatenated Signal — See OC-3c.

Subnetwork
Group of SONET network elements that share a SONET data communications channel.

Synchronization Messaging
SONET synchronization messaging is used to communicate the quality of network timing, internal timing status, and timing states throughout a subnetwork.

SYSCTL
The system controller circuit pack that provides overall administrative control of the terminal.

T

T1EXT
T1 Carrier Extension Circuit Pack

T1X1 and T1M1
The *ANSI* committees responsible for telecommunications standards.

TA
Telcordia Technologies Technical Advisory

TABS
Telemetry Asynchronous Byte Serial (Protocol)

TARP
Target Address Resolution Protocol

TBOS
Telemetry Byte-Oriented Serial (Protocol) — Defines one physical interface for direct connection between the telemetry remote and the monitored equipment. An RS-422 port is used to provide the operations system with sufficient alarm and status information to localize a problem to a given DDM-2000 and to determine the severity of the problem.

TCA
Threshold-Crossing Alert — A condition set when a performance-monitoring counter exceeds a user-selected threshold. A TCA does not generate an alarm but is available on demand through the CIT and is shown by TBOS and causes a message to be sent to NMA via the X.25/TL1 interface.

TCVCXO
Temperature-Compensated Voltage-Controlled Crystal Oscillator — A highly stable and accurate clock source used in the DDM-2000 TGS circuit pack.

TGS
The timing generator circuit pack generates clock signals for distribution to the transmit circuits. It operates in the free-running, loop-timing, phase-lock, and holdover modes.

TID
Target Identifier — The Telcordia Technologies name for the system name.

TL1
Transaction Language 1 — A Telcordia Technologies machine-to-machine communications language that is a subset of ITU-TSS, formerly CCITT's, human-machine language.

TLB
Timing Looped Back — Used in synchronization messaging.

TOP
Task Oriented Practice

TR
Telcordia Technologies Technical Requirement

TSA
Time Slot Assignment

TSI
Time Slot Interchange

TSO
Technical Support Organization — Supports RTAC and the customers.

U

UAS
Unavailable Seconds. In performance monitoring, the count of seconds in which a signal is declared failed or, in which, 10 consecutively severely errored seconds (SES) occurred, until the time when 10 consecutive non-SES occur.

Unidirectional
A protection switching mode in which the system at each end of an optical span monitors both service and protection lines and independently chooses the best signal (unless overridden by an equipment failure or by an external request, such as a forced switch or lockout). In a system that uses unidirectional line switching, both the *service* and *protection* lines may be *active* simultaneously, with one line carrying traffic in one direction and the other line carrying traffic in the other direction. The K1 and K2 bytes in the SONET line overhead are used to convey to the far end which line the near end receiver has chosen, so that an "active" indication may be made at the far end.

UOC
Universal Optical Connector — Receptacles on the faceplate of some OLIUs that accept ST, SC, or FC connectors.

UPD/INIT
A pushbutton on the user panel.

V

V-DT
Virtual-Distant Terminal

VF
Voice Frequency

VLSI
Very Large Scale Integration — Refers to very complex state of the art integrated circuits.

VM
Violation Monitor — A mode of the DS3 circuit pack in which it will monitor but not remove P-bit parity violations on the DS3 signal received from the fiber.

VMR
Violation, Monitor, and Removal — A mode of the DS3 circuit pack in which it will monitor and remove P-bit parity violations on the DS3 signal received from the fiber.

V-MSDT
Virtual Multi-Services Distant Terminal

VONU
Virtual Optical Network Unit

VT
Virtual Tributary — A structure designed for transport and switching of a sub-DS3 payload.

VT1.5
A 1.728 Mb/s virtual tributary

VT-G
Virtual Tributary Group — A 9-row by 12-column SONET structure (108 bytes) that carries one or more VTs of the same size. Seven VT groups (756 bytes) are byte-interleaved within the VT-organized STS-1 synchronous payload envelope.

W

WAN
Wide Area Network

Z

Zero Code Suppression
A technique used to reduce the number of consecutive zeros in a line-codes signal (B3ZS for DS3 signals and B8ZS for DS1 signals).

Index

Numerics

177A Retainer Card
  Description, 7-29
22D-U OLIU, 7-2, 10-13
22F/22F-U/22F2-U OLIU, 7-2, 10-17
22G-U/22G2-U/22G3-U/22G4-U OLIU, 7-2, 10-18
22-Type OLIUs
  Circuit Pack Description, 7-66
  Quick Reference Summary, 7-73
26G2-U OLIU, 7-2, 10-22
  Quick Reference Summary, 7-81
28G-U/28G2-U OLIU, 7-2, 10-27, 10-48
  Circuit Pack Description, 7-82
  Network Topologies, 2-25
  Quick Reference Summary, 7-88
  Service Application Release 3.1, 2-39
  Service Applications Release 2.2, 2-34
29G-U OLIU, 7-2, 10-31
29H-U OLIU, 7-2, 10-32
29-Type OLIU
  Circuit Pack Description, 7-89
  Network Topologies, 2-26
  Service Applications Release 4.0, 2-43
2B+D ISDN service, 8-63

A

ABN LED, 6-10
Access
  CIT Ports, 9-5
  Front, 3-1, 9-22
  Modem, 9-5
  Terminal, 6-2, 9-5
ACO
  Indicator, 10-52
ACO LED, 6-10
ACO/TST Pushbutton, 6-11
ACTIVE Indicator, 6-13, 10-52
ACTIVE LED on Rings, 9-21
Administration, 8-1
  Controller Maintenance and Memory Administration, 8-7
  Data Base Backup and Restoral, 8-3
  ITM SNC, 8-4
  Narrowband Shelf, 8-58
  Remote Software Download and Copy, 8-2
  Security, 8-4, 8-58
  Service Affecting Actions, 8-8
  Software Compatibility, 8-6
  Software Downloads and Upgrades, 8-58
  Software Upgrades, 8-2
  Version Recognition, 8-1
  Wideband Shelf, 8-1, 8-2
AIS, 9-14
Alarms, 6-10
  Delay, 6-13, 9-13
  LEDs, 6-11, 9-4
  Office, 6-13
  Reports, 9-38
  Status, 9-38
Applications, 5-14
  DDM-2000 FiberReach Service Applications, 2-28
  Dual Wire Center, 2-14
  Dual-Homed Access Via a Backbone Ring, 2-13
  Enhanced Routing, 2-20
  Integrated Narrowband Business Carrier Access, 2-54
  Intelligent Vehicle Highway System, 2-62
  Intelligent Vehicle Highway System (IVHS), 2-62
  Locked STS-3c Broadband Services, 8-56
  Network Topologies, 2-9
  Single Homing to Linear DDM-2000 OC-3 Networks, 2-16
  Single-Homed Access via Backbone Ring, 2-10
  Stand-Alone OC-1 Ring/Hub Networks, 2-17
  Summary, 2-1
  Teleprotection and SCADA Communications for Electric Utilities, 2-64
AUA413, 7-91
AUA421, 7-91
  Channel and Drop Test Unit, 4-12
AUA432, 7-91
  Power Converter Unit, 4-10
Audiences of Document, Intended, xli
Automatic Synchronization Reconfiguration, 9-21

B

BBF1B, 7-1, 10-2
  DS1 Circuit Pack Description, 7-15
  DS1 Quick Reference Summary, 7-20
BBF3/BBF3B, 7-1, 10-3
  DS1PM Circuit Pack Description, 7-22
  DS1PM Quick Reference Summary, 7-28
BBF6, 7-1
  T1 EXT Circuit Pack Description, 7-38
  T1EXT, 10-8
  T1EXT Quick Reference Summary, 7-45
BBF8, 7-1, 10-11
  HDSL Quick Reference Summary, 7-61
  High Data-Rate Digital Subscriber Line Circuit Pack Description, 7-54
BBG19, 3-28, 7-1, 10-7

DS3 Data Services Interface Circuit Pack Description, 7-46
DS3 Quick Reference Summary, 7-52
BBG4/BBG4B, 3-26, 7-1, 10-5
DS3 Circuit Pack Description, 7-30
DS3 Circuit Packs, 7-35
DS3 Quick Reference Summary, 7-36
BBG8/BBG8B, 7-1
SYSCTL Circuit Pack Description, 7-3
SYSCTL Quick Reference Summary, 7-9
Brownout Protection, 7-7

C

Canadian Standards Association, 10-56
Carrier Assembly, 3-9
C-Bit, 9-27, 9-28
CDTU
Circuit Pack Description, 7-93
Channel and Drop Test Unit, AUA421
Narrowband Shelf, 4-12
Channel Unit
Circuit Pack Descriptions, 7-96
Provisioning, Narrowband Shelf, 8-61
Virtual Slot Concept, NBS, 8-65
Circuit Packs
177A Retainer Card, 7-29
22-Type OLIUs, 7-66
26G2-U OLIU, 7-75
28G-U/28G2-U OLIU, 7-82
29G-U/29H-U, 7-89
Automatic Provisioning, 8-10
BBF1B, 7-15
BBF3/BBF3B DS1PM, 7-22
BBF6 T1 EXT, 7-38
BBF8 HDSL, 7-54
BBG19 DS3 Data Service, 7-46
BBG4/BBG4B DS3, 7-30
BBG8/BBG8B SYSCTL, 7-3
CDTU, 7-93
Channel Unit, Narrowband Shelf, 7-96
Control, 7-2
Descriptions, 7-1
DS1, 7-15
DSXBIU, 7-94
ECC2 User Panel, 7-11
Faceplate Indicators, 6-8
Faceplate LEDs, 9-4
Keyed, 3-7
Keying, 3-7
Narrowband Shelf, 7-91
Optical Interface, 7-64
PCU, 7-92
RGU, 7-92
SYSCTL, 7-2
Universal Optical Connector, 7-62
Wideband Shelf, 7-1
Circuit Packs, Control, 7-2
ECC2, 7-1
Circuit Packs, Transmission
BBF1B, 7-1
BBF3/BBF3B, 7-1
BBF6, 7-1
BBF8, 7-1
BBG19, 7-1
BBG4/BBG4B, 7-1
CIT, 6-2
Access, 6-2
Access Modem, 6-2
Compatible Modems, 10-51
Interfaces, 6-2
Local Access, 6-2
PC as a CIT, 6-6
Ports, 9-5
Remote Access Using DCC, 6-6
Using PC as, 6-6
Clear Delay, 6-13, 9-13
Comments
Document, lxxi
Connectors
Optical, 3-1
Control Circuit Packs, 7-2
Wideband Shelf, 4-6
Control Pushbuttons
ACO/Test and UPD/INIT, 6-11, 9-4
Controller Maintenance, 8-7
CPro-2000
Graphical User Interface and Provisioning Tool, 6-7, 10-51
Craft Interface Terminals, 9-5, 10-49
See CIT, 6-2
Cross-Connection
Add/Drop for DS3, 8-27
Basic DS3, 8-53
DS3 Locked, 8-54
Examples, 8-41, 8-43, 8-45, 8-47, 8-49, 8-51, 8-53, 8-54, 8-55
for Release 3.1 and Later, 8-52
Locked, 8-30
Manual Procedure, 8-35
Manual STS-3c, 8-29
Pass-Through, 8-28
Pass-Through for STS-1, 8-29
Provisioning, 8-22
Ring Provisioning, 8-22
STS-3c, 8-55
Termination/Drop, 8-23
Cross-Connections, Manual
Procedure, 8-35
Customer Technical Support, lxvi

CV-P Coding Violations, 9-33
CV-PFE Coding Violations, 9-33

D

Data Base Backup and Restoral, 8-3
Data Communications Channel, 9-1
Data Networking
  DS3 Data Services, 2-28
Data Services Interface, 3-28
DCC
  Provisioning, 8-12
  Remote Access Using DCC, 6-6
DDM-2000 Drawings
  FiberReach, lxii
  OC-12, lxiv
  OC-3, lxiii
Delay, 10-46
  Alarm, 6-13, 9-13
Demultiplexing, 5-2
Digital Data Performance, 10-49
Directory Services Network Element (DSNE), 9-40
Discretes
  Miscellaneous, 6-16
Documentation
  Comments, lxxi
  Electronic, lxxii
  Ordering, lxx
  Related, lv
  Support, lxix
Documents
  Ordering Documents, lxx
Drawings
  DDM-2000 OC-3, lxii
DS0 Services, 2-54
DS1
  Line Parameters, 9-37
  Line Performance Monitoring
    ES-L Errored Seconds, 9-37
  Low-Speed (BBF1B), 10-2
  Path Parameters, 9-33
  Performance Monitoring, 9-25
  Service and T1 Extensions, Wideband Shelf Configuration, 3-22
  Services, 2-9, 2-54, 3-26
  Services, Wideband Shelf Configuration, 3-17
  Transmission Interface, 5-1
  Transport Configuration with SLC LineReach Access System, 2-60
DS1/DS1PM Circuit Packs
  Wideband Shelf, 4-6
DS-1/T1 Multiplexing and Mapping, 8-9
DS1PM Low-Speed (BBF3/BBF3B), 10-3
DS3
  Data Services Interface (BBG19), 10-7
  Data Services, Data Networking, 2-28
  Data Services, Protected
    Using BBG4B Circuit Packs, 2-31
  Data Services, Unprotected, Using BBG19 Circuit Packs, 2-30
  Interface, BBG4/BBG4B, 3-26
  Line, 9-28
  Low-Speed (BBG4/BBG4B), 10-5
  Parameters, 9-34
  Path, 9-35
  Path PM, 9-27
  Performance Monitoring, 9-27, 9-34
  Performance Monitoring, C-Bit, 9-27
  Performance Monitoring, P-Bit, 9-27
  Performance Monitoring. F&M-Bit, 9-27
  Services, 3-26
DSXBIU
  Circuit Pack Description, 7-94
  Narrowband Shelf, 4-10
Dual-Homed Access via a Backbone Ring, 2-13
Dual-Homed Path-Switched Ring Example, 8-42
Dual-Homed Ring Interworking Application, 9-19

E

Earthquake Requirements, 10-55
ECC2, 7-1
  User Panel Circuit Pack Description, 7-11
Electrostatic Discharge, li
EMC Requirements, 3-7, 10-55
Environmental Alarms, 6-16
Environmental Controls, 6-16
Environmental Specifications, WBS, 10-55
Equipment
  Indicators, 6-12, 10-52
  Protection, Low-Speed, 9-21
ESD Considerations, li

F

F, 9-27
F&M-Bit, 9-27
Faceplate Indicators, 6-8
Faceplate LEDs, Circuit Pack, 9-4
Fan
  Alarm, 10-55
  Cooling, 10-55
Fault
  Detection, Isolation, and Reporting, 9-13
  Indicator, 10-52

LED, 9-4
FAULT Indicators, 6-12
FAULT LEDs, 4-12
FE ACTY LED, 6-10
FE SEL Pushbutton, 6-10
FERF, 9-14
FHB2, 7-91
FHB2 Digital Signal Cross-Connect Backplane Interface Unit
Narrowband Shelf, 4-10
FiberReach Multiplexer
Access to X.25 Port, 6-14
Application Types, 2-2
Applications Summary, 2-1
Basic Description, 1-3
Carrier Assembly, 3-9
Narrowband Shelf, 1-4 3-31
Narrowband Shelf Channel Unit Plug-Ins, 3-34 7-96
Network Topologies, 2-9 2-25
Power Architecture, 4-2
Release 2.2, 1-7
Release 3.0, 1-8
Release 3.1, 1-9
Release 4.0, 1-10
Release Descriptions, 1-7
Releases, 1-7
Reliability, 10-59
Service Applications, 2-28
SLC LineReach Access System, 1-5
Wall-Mount Distant Terminal, 3-10
Wideband Shelf, 1-3 3-1
FiberReach Release 4.0
Remote NE Status Features, xliii
Fire Resistance, 10-55
Frame Structure
SONET, A-6
Fuses, 10-56 10-64
Shelf, 10-56 10-64

G

Grounding Jacks, lii

H

Hairpin Local Drop Routing, 2-24
Hairpin Local Drop Routing Example, 8-50
Hardened
Uncontrolled Environments, 10-55
HDSL, 2-43
Application, 2-32
Interface (BBF8), 10-11
Lightning and Surge Protection Assembly, 3-15
Services, 3-25
Heat Baffles, 10-55
High Data-rate Subscriber Line
See HDSL, 2-32
Holdoff Delay, 6-13 9-13
Holdover Timing Mode, 9-22

I

Indicators, 6-13
ACTIVE, 6-13
Equipment, 6-12 10-52
Faceplate, 6-8
FAULT, 6-12
Fault, 6-12
User Panel, 10-52
Infant Mortality, 10-60
Inservice Upgrades, 9-10
Instructions
Safety, xlvi
Integrated Narrowband Business Carrier Access, 2-54
Integration
Wideband and Narrowband Shelves, 5-6
with Dual Wire Center Applications, 2-14
Intelligent Vehicle Highway System (IVHS), 2-62
Interfaces
Craft Interface Terminal, 10-49
Office Alarms, 10-53
Operations, 10-49
Interfaces and Multiplexing, 5-1
Intermediate Reach OC-3 Interface (22F2-U OLIUs), 10-17
ISDN 2B+D Service, 8-63
ITM SNC, 6-15 8-4

J

Jumpers
Lightguide, 10-12

L

LAN/WAN
Data Networking, 2-28 2-32
Laser Classifications, xlvii
Class I, xlvii
Layers
SONET, A-4
LEDs, 4-12

Alarms, 6-11
Circuit Pack Fault, 9-4
User Panel, 6-10, 6-11, 9-4
Lightguide Jumpers, 10-12
Line Coding Violations (B2 Parity), 9-29
Locked Cross-Connection, 8-30
Long Reach OC-1 Interface (26G2-U/27G-U/27G2-U OLIUs), 10-22
Long Reach OC-12 Interface (29G-U OLIU), 10-31
Long Reach OC-12 Interface (29H-U OLIU), 10-32
Long Reach OC-3 Interface (22G-U/22G2-U/22G3-U/22G4-U OLIUs), 10-18
Long Reach OC-3 Interface (28G-U/28G2-U OLIU), 10-27
Loopbacks, 9-22
DS1, 9-22
Optical, 9-22
Low-Speed Equipment Protection, 9-21
Lucent 2000 Product Family, 1-1

M

Maintenance
Automatic Diagnostics, 9-13
Craft Interface Terminal, 9-5
Fault Detection, Isolation and Reporting, 9-13
History Reports, 9-39
Loopbacks and Testing, 9-22
Operations System (OS) Interface, 9-6
Operations Tier 1, 9-4
Operations Tier 2, 9-5
Operations Tier 3, 9-6
Proactive, 9-23
Signaling, 9-10
Single-Ended Philosophy, WBS, 9-1
Three-Tiered Operation, 9-3
User Panel and Faceplate LEDs, 9-4
Wideband Shelf, 9-1
Memory Administration, 8-7
Messages
TL1, 6-14
Miscellaneous Discretes, 9-6
User-Definable, 6-16, 10-53
Mixing
OC-3 Optical Interface, 10-36
Modems, 10-51
Compatible, 10-51
Multiplexing
Asynchronous, SONET, A-14
Concatenated Mode, SONET, A-16
Digital Schemes, SONET, A-14
SONET, A-6
Synchronous, SONET, A-15
Multiplexing and Mapping
OC-1 Path Protected Ring Application, 8-35
Multi-Vendor OI, xlii, 9-7

N

Narrowband Business Carrier Access, 2-54
Narrowband Shelf, 3-31, 7-91
–48 V Battery Powering, 4-6
Administration, 8-58
Channel Unit Plug-Ins, 7-96
Channel Units, 3-34
Circuit Packs, 7-91
Configurations, 2-48
FiberReach Multiplexer, 1-4
Front View, 3-32
Interfaces, 5-4
Multiplexing, 5-4
Octet Mode, 8-61
Operations Interfaces, 6-1
Power Minor Alarm, 4-13
Power Options, 4-8
Provisioning, 8-61
Quad Mode, 8-61
Rear View, 3-33
Transmission Circuit Packs, 4-10
Typical Applications, 2-48
Wall Distant Terminal Powering, 4-4, 4-9
NE ACTY LED, 6-10
Network Bay and Cabinet Mounting (WBS), 10-54
Network Monitoring and Analysis, 6-14
Network Topologies, 2-9, 2-25
Dual-Homed Access via a Backbone Ring, 2-13
Integration with Dual Wire Center Applications, 2-14
Single Homing to Linear DDM-2000 OC-3 Networks, 2-16
Single-Homed Access via Backbone Ring, 2-10
Stand-Alone OC-1 Ring/Hub Networks, 2-17
Network Topology
28G-U/28G2-U, 2-25
29-Type, 2-26
NSAP Provisioning, 8-16

O

OC-1, 2-9
OC-1 and OC-3 VT1.5 Single-Homed Path-Switched Ring, 8-38
OC-1 Path Protected Ring Application Example, 8-35
OC-1 Ring Hairpin Routing, Dual-Homed, 2-23
OC-1 Ring Hairpin Routing, Dual-Homed Example, 8-48
OC-1 Ring Hairpin Routing, Single-Homed, 2-22
OC-1 Ring Hairpin Routing, Single-Homed Example, 8-46

OC-1 Ring Pass-Through, 2-21
OC-1 Ring Pass-Through Example, 8-44
OC-1/OC-3 Section Parameters, 9-28
OC-1/OC-3/OC-12 Line Parameters, 9-29
OC-1/OC-3/OC-12 Transmission Interface, 5-1
OC-12
  Network Topology, 2-25
OC-3
  Network Topology, 2-25
OC-3 Optical Interface Mixing, 10-36
OC-3 Rate Interface (22D-U OLIUs), 10-13
OC-3 Rate Interface, Intra-Office (IS-3), 10-13
OC-3/OC-1 Path Switched Ring (0x1), 9-17
Octet, 8-65
Octet Mode
  Narrowband Shelf, 8-61
Office Alarms, 6-13
Office Alarms Interfaces, 10-53
OLIU Circuit Packs
  Wideband Shelf, 4-6
ONU
  Narrowband Shelf Provisioning, 8-61
Operation System Interface Availability, 10-60
Operations Interface Tests, 9-23
Operations Interfaces, 6-1 10-49
Operations Interworking (OI)
  Provisioning, 8-12
Operations System (OS) Interface, 9-6
Operations System/Intelligent Network Element, 6-14
Operations Tier 1, 9-4
Operations Tier 2, 9-5
Operations Tier 3, 9-6
OPS/INE, 6-14
Optical Connector, 3-1
  Universal, 10-36
Optical Interface, 7-62
  Circuit Packs, 7-64
  OC-3 Mixing, 10-36
  STS-3c 0x1, 2-45
Optical Interfaces, 7-2
  Specifications, 10-12
Optical Module Maintenance Objective, 10-60

P

Panel, Front, 3-7
Parameters
  CIT Selectable, 8-18
  Hardware Switch Selectable, 8-17
  Performance, 9-28
  Selectable, 8-17
Path Protection Switching
  Rings, 9-14
P-Bit, 9-27
PCU
  Circuit Pack Description, 7-92
Performance
  Jitter, 10-44
  Signal, 10-44
  Transient, 10-46
  Wander, 10-44
Performance Monitoring, 9-23 10-47
  Adjusted F&M Bit, 9-27
  C-Bit, 9-28
  Data Storage and Reports, 9-37
  DS1, 9-25
  DS1 Line Parameters, 9-37
  DS1 Path, 9-26
  DS1 Path Parameters, 9-33
  DS1/DS3 Line and Path and DS3 Path, 9-24
  DS3, 9-27
  DS3 Line, 9-28 9-36
  DS3 Parameters, 9-34
  DS3 Path, 9-27
  DS3 Performance Monitoring, 9-34
  During Failed Conditions, 9-37
  OC-1/OC-3 Section Parameters, 9-28
  OC-1/OC-3/OC-12 Line Parameters, 9-29
  Parameter Thresholds, 9-37
  P-Bit, 9-27
  Performance Parameters, 9-28
  Performance Status Report, 9-39
  Reports, 9-39
  STS-1 Path Parameters, 9-31
  Thresholds, 10-47
  VT, 9-25
  VT1.5 Path Parameters, 9-32
Personal Computer for Software Download
  Specifications, 10-50
Pointer Justification Count, 9-30
Power, 4-1
  Converters, Wideband Shelf, 4-1
  Dissipation (NBS), 10-64
  Dissipation (WBS), 10-56
  Distribution, 4-14
  Distribution, Wideband Shelf, 4-3
  Feeders, Wideband Shelf, 4-1
  Loss Restart, 10-46
Power Architecture
  Wideband Shelf, 4-2
Power Converter Unit, AUA432
  Narrowband Shelf, 4-10
Power Options
  Narrowband Shelf, 4-8
Power Supply Unit, BGW1
  Narrowband Shelf, 4-10
Proactive Maintenance, 9-23
Program Flash-EPROM, 7-5
Protection Architectures
  Wideband Shelf, 5-4

Protection Switching, 9-14 10-45
Equipment, 9-21
Ring Networks, 10-45
Synchronization Reference, 9-21
Provisioning, 8-1
AIS or Unequipped Provisioning, 8-12
Automatic Provisioning on Circuit Pack Replacement, 8-10
Channel State, 8-11
CPro-2000, 10-51
Cross-Connection, 8-22
DCC, 8-12
Default Provisioning, 8-9
Feature Packaging, 8-10
ISDN 2B+D in NBS, 8-63
Line State Provisioning, 8-12
Manual Cross-Connection Procedure, 8-35
Narrowband Shelf, 8-61
Narrowband Shelf Channel Units, 8-61
NSAP, 8-16
OC-1 and OC-3 VT1.5 Single-Homed Path Switched Ring, 8-38
Open Systems Interconnection, 8-10
Operations Interworking, 8-12
OSI, 8-10
Port State, 8-11
Remote Provisioning, 8-10
Reports, 9-38
Ring Cross-Connection, 8-22
TARP, 8-16
Wideband Shelf, 8-9
Provisioning Tool, SNC-2000 CPro, 6-7
Purpose of Document, xli
Pushbutton
ACO/TST, 6-11
Combinations, 6-12
FE SEL, 6-10
UPD/INIT, 6-11
PWR ON Indicator, 10-52
PWR ON LED, 6-10

Q

Quad Mode, Narrowband Shelf, 8-61

R

Reissue Reason, xlii
22G4-U OLIU, xlii
29G-U/29H-U OLIUs, xlii
BBF6 T1EXTwith T1 Loopback, xlii
DCC Provisioning on Main Slots, xlii
FiberReach Multiplexer Release 4.0, xlii
OC-3 Release 13.0 and Later, xlii
Provisioning of Asynchronous CIT Port, xlii
Remote Alarm Status, xlii
STS-3c 0X1with 29-Type in Main, xlii
Reliability
of FiberReach Multiplexer, 10-59
Predictions, 10-61
Remote NE Status Features
Remote CIT Alarm Reports, xliii
Remote Office Alarms, xliii
Reports, 9-38
Alarm and Statuses, 9-38
Database Change Transmission to OS, 9-39
Equipment, 9-40
Maintenance History, 9-39
Network Map, 9-40
Path State, 9-40
Performance Monitoring, 9-39
Performance Status Report, 9-39
Provisioning, 9-38
State, Circuit Packs, 9-39
TCA Summary, 9-39
Requirements
Earthquake, 10-55
EMC, 10-55
Power, 10-56
Power (NBS), 10-64
Restart
Power Loss, 10-46
Retainer Card
177A Retainer, 7-29
RGU
Circuit Pack Description, 7-92
Ring Networks, 10-45
Ring Topologies, 2-3
OC-12 Path Switched Ring, 2-7
Ringing Generator Units
Narrowband Shelf, 4-11
Rings
ACTIVE LED on, 9-21
Cross-Connection Provisioning, 8-22
Dual-Homed Ring Interworking Application, 9-19
OC-1 and OC-3 VT1.5 Single-Homed Path Switched Ring, 8-38
OC-3/OC-1 Path Switched Ring (0x1), 9-17
OC-3/OC-1 Ring Interworking, 9-17
Path Protection Scheme, 9-15
Path Protection Switching, 9-14
Single-Homed Interworking Application, 9-18
Status of ACTIVE LED on, 9-21
Routing
Hairpin Local Drop, 2-24
OC-1 Ring Hairpin Routing, Dual-Homed, 2-23
OC-1 Ring Hairpin Routing, Single-Homed, 2-22

OC-1 Ring Pass-Through, 2-21
Routing, Enhanced, 2-20

S

Safety
Cautions, xlvi
Dangers, xlvi
Enclosed Systems Precautions, xlviii
ESD Considerations, li
Grounding Jacks, lii
Instructions, xlvii, liii, liv
Labels, xlvi
Laser Information, xlvi
Lasers and Eye Damage, xlvii
Lightwave Guidelines, xlvi
Lightwave Precautions, xlviii
Lightwave Safety Guidelines, xlvi
Product Labels, xlvi
Surge Protection Shelf, l
T1EXT Lightning Shelf, l
Unenclosed Systems Precautions, l
Warnings, xlvi
Wrist Straps, lii
SCADA, 2-64
Secured-Area Telecommunication Applications Cabinet
See STAC System, 3-37
Security, 8-4, 8-58
Administration, 8-4
Service Affecting Actions, 8-8
Service Applications
Using 28-Type OLIU for Release 2.2, 2-34
Using 28-Type OLIU for Release 3.1, 2-39
Using 29-Type OLIU Release 4.0, 2-43
Service Provisioning
FiberReach Narrowband Shelf ONU, 8-61
Shelf
Circuit Pack Keying, 3-7
Configurations, 3-1
Craft Interface Port, 9-5
Descriptions, 3-1
Front Access, 3-1
Fuses, 10-56, 10-64
Signal Performance, 10-44
Signaling Mode, 10-49
Single Homing to Linear DDM-2000 OC-3 Networks, 2-16
Single-Homed Access via Backbone Ring, 2-10
Single-Homed Interworking Application, 9-18
Single-Homed Path-Switched Ring Example, 8-38
SLC LineReach Access System, 1-5 2-60
SLC-2000 Access System
Basic Description, 1-2
Software and Circuit Pack Compatibility, 8-15
Software Compatibility, 8-6 8-14
Software Download
Personal Computer Specifications, 10-50
Software Download and Copy, Remote, 8-2
Software Downloads and Upgrades, 8-58
Software Upgrades, 8-2
SONET
Demultiplexing Procedure, A-11 A-12
Digital Multiplexing Schemes, A-14
Frame Structure, A-6
Higher Rate Transport, A-20
History, A-1
Interface, A-18
Layers, A-4
Line Overhead, A-7
Multiplexing, A-6
Multiplexing Procedure, A-10
Overhead Bytes, 10-44
Path Overhead, A-8
Payloads, A-18
Purpose, A-2
Section Overhead, A-6
Signal Hierarchy, A-2
Transport (SLC LineReach), 2-60
Transport, Integrated Configuration, 2-60
Virtual Tributary Signals, A-15
Sparing Guidelines, 10-39
Specifications
22D-U OLIUs, 10-13
22F/22F-U/22F2-U OLIU, 10-17
22G-U/22G2-U/22G3-U/22G4-U OLIUs, 10-18
26G2-U OLIU, 10-22
28G-U/28G2-U OLIU, 10-27
29G-U OLIU, 10-31
29H-U OLIU, 10-32
CPro-2000 Graphical User Interface and Provisioning Tool, 10-51
Craft Interface Terminal, 10-49
Delay, 10-46
Digital Data Performance, 10-49
DS1 Low-Speed (BBF1B), 10-2
DS1PM Low-Speed (BBF3/BBF3B), 10-3
DS3 Low-Speed (BBG19), 10-7
DS3 Low-Speed (BBG4/4B), 10-5
DS3 Low-Speed (BBG4/BBG4B), 10-5
Electrical Interfaces, 10-2
Environmental, 10-55
Equipment Indicators, 10-52
External Transmission Interfaces, OC-3, 10-1
HDSL Interface (BBF8), 10-11
Lightguide Jumpers, 10-12
Lucent 2000 Product Family OI, 10-53
Miscellaneous Discrete, 10-53
Modems, 10-51
Narrowband Shelf, 10-64
OC-3 Optical Interface Mixing, 10-36
Office Alarms, 10-53

Operations Interfaces, 10-49
Optical Interfaces, 10-12
Performance Monitoring, 10-47
Personal Computer for Software Download, 10-50
Physical, 10-54
Physical (NBS), 10-64
Protection Switching, 10-45
Signal Performance, 10-44
Signaling, 10-49
Signaling Mode, 10-49
Sparing Guidelines, 10-39
T1 Carrier Low-Speed (BBF6 T1EXT), 10-8
Terminal-to-Terminal Voice-Frequency Transmission, 10-65
TL1/X.25 Interface, 10-53
Transmission Specifications (NBS), 10-65
Universal Optical Connectors, 10-42
User Panel, 10-52
Wander/Jitter, 10-44
Specifications,Technical, 10-1
STAC System, 3-37
Construction, 3-38
Reliability, 3-38
Stand-Alone OC-1 Ring/Hub Networks, 2-17
STS Pointer Justification Coun, 9-30
STS Pointer Justification Count, 9-30
STS-1 Path Coding Violations (B3 Parity), 9-31
STS-1 Path Parameters, 9-31
STS-3c 0 X1
Wideband Shelf Configuration, 3-30
STS-3c 0X1 Optical Interface, 2-45
Subnetwork, SONET, Definition, 9-2
Supervisory Control and Data Acquisition Communications for Electric Utilities, 2-64
Support
Customer Support and Operations, lxviii
Document Comments, lxxi
Documentation, lxix
Engineering and Installation Services, lxviii
Technical for Customer, lxvi
Transmission Systems Technical Support Services, lxix
Switch Settings
BBF1B DS1 Circuit Pack, 7-18
BBF3/BBF3B DS1PM Circuit Pack, 7-26
BBF6 T1EXT Circuit Pack, 7-43
BBF8 Circuit Pack, 7-60
BBG19 DS3 Circuit Pack, 7-51
BBG4B DS3 Circuit Pack, 7-35
DS1 Circuit Pack, 7-18
Switching
Protection, 9-14, 10-45
Synchronization, 5-1, 5-7
External Timing/Line Timing Configuration, 5-9
Free Running/Line Timed Network, 5-7
Line Timing, 5-7
Line Timing/Line Timing Configuration, 5-11
Manual Timing Pack Switch, 5-7
Subnetwork Configurations, 5-7
Subnetwork configurations, 5-7
Timing Distribution, 5-12
Synchronization Messaging, 5-14, 9-21
Automatic Synchronization Reconfiguration, 5-14
Examples, 5-17
Feature Details and Options, 5-15
Provisioning Integrity, 5-15
Reconfiguration in an Access Ring, 5-17
Synchronization Reference Protection, 9-21
SYSCTL, 7-1
System
Introduction, 1-1

T

T1 Carrier Low-Speed (BBF6 T1EXT), 10-8
T1 Extensions, 3-19
Lightning and Surge Protection Assembly, 3-15
Wideband Shelf, 3-19
T1 Extensions and DS1 Service
Wideband Shelf Configuration, 3-22
T1 Services, 2-9, 2-54
T1 Transmission Interface, 5-2
T1EXT Lightning Shelf, l
TARP, xlii, 9-7
Provisioning, 8-16
Technical Specifications, 10-1
Technical Support, Customer, lxvi
Teleprotection for Electric Utilities, 2-64
Tests
Automated Installation, 9-23
Loopbacks, 9-22
Manual, 9-23
Operations Interface, 9-23
Test Signal Generators, 9-23
Transmission, 9-23
Three-Tiered Operations, 9-3
Threshold Crossing Alert (TCA), 9-37
Thresholds
Performance Monitoring, 10-47
TIDs, 9-40
Timing Mode
Holdover, 9-22
TL1/X.25, 9-6
Interface, 6-14, 10-53
Messages, 6-14
Transient Performance, 10-46
Transmission, 5-1
Availability, 10-59
Demultiplexing, 5-2
Interface, 5-1
Multiplexing, 5-2

Optical Interface, 7-62
Specifications (NBS), 10-65
Start-Up on Signal Application, 10-46
Transmission and Architecture, 5-2
Transmission Circuit Packs
Narrowband Shelf, 4-10
Transmission Interface
DS1, 5-1
OC-1/OC-3/OC-12, 5-1
T1, 5-2
Transmission Specifications
Multiparty and FSR Channel Units, 10-68
VF Channel Units with Adjustable Settings, 10-72
Transmission Tests, 9-23

U

Uncontrolled Environments
Hardened, 10-55
Underwriters Laboratories, Specifications, 10-56
Universal Optical Connector, 10-36
Universal Optical Connectors, 7-62 10-42
UPD/INIT Pushbutton, 6-11
Upgrades, 9-10
Inservice, 9-10
Software, 9-10
User Panel, 6-8
Indicators, 10-52
LEDs, 6-10 ,6-11 9-4
Wideband Shelf, 3-7
User Panel and Faceplate Interfaces, 6-8
User Panel and Faceplate LEDs, 9-4
User-Definable Miscellaneous Discretes, 10-53
USPNL, 7-1

V

Version Recognition, 8-1
Administration, 8-1
VIrtual Channel Unit Slot Concept (NBS), 8-65
VT
Performance Monitoring, 9-25
VT1.5 Path Parameters, 9-32

W

Wall Distant Terminal, 3-10
Powering, 4-4
Powering, Narrowband Shelf, 4-9
Wall Mount Enclosure Options, 3-11
Wander/Jitter, 10-44
Wideband Shelf
-48 V Battery Powering, 4-1
Administration, 8-1
Circuit Packs, 7-1
Configuration, 3-16
Configurations, 2-9
Description, 3-1
DS1 Services, 3-17
DS1/DS1PM Circuit Pack, 4-6
FiberReach Multiplexer, 1-3
Front Panel, 3-7 3-8
HDSL Services, 3-25
Interfaces, 5-2
Maintenance, 9-1
Multiplexing, 5-2
OLIU Circuit Packs, 4-6
Operations Interfaces, 6-1
Optical Connectors, 3-1
Physical Characteristics, 10-54
Plug-Ins, 3-14
Power Architecture, 4-2
Protection Architectures, 5-4
Provisioning, 8-9
Specifications, 10-1
SYSCTL Circuit Pack, 4-6
T1 Extensions, 3-19
T1 Extensions and DS1 Service, 3-22
Transmission Circuit Packs, 4-6
Wall Distant Terminal Powering, 4-4
Wrist Straps, Iii
Static Control, Iii

Lucent Technologies
Bell Labs Innovations

DDM-2000 FiberReach Multiplexer Wideband/Narrowband Shelf TARP Release 3 and Later

User/Service Manual (TOP)
Volume II

363-206-305
Issue 3
June 2000

Copyright © 2000 Lucent Technologies.
All Rights Reserved
Printed in U.S.A.

This material is protected by the copyright laws of the United States and other countries. It may not be reproduced, distributed or altered in any fashion by any entity, including other Lucent Technologies Business Units or Divisions, without the expressed written consent. For permission to reproduce or distribute, please contact your local Lucent Technologies Account Executive or Product Development Manager.

Notice

Every effort was made to ensure that the information in this document was complete and accurate at the time of printing. However, information is subject to change.

Mandatory Customer Information

Interference Information: Part 15 of Federal Communications Commission (FCC) Rules.

NOTE: This equipment has been tested and found to comply with the limits for a Class A digital device, pursuant to Part 15 of the FCC Rules. These limits are designed to provide reasonable protection against harmful interference when the equipment is operated in a commercial environment. This equipment generates, uses, and can radiate radio frequency energy, and, if not installed and used in accordance with the instruction manual, may cause harmful interference to radio communications. Operation of this equipment in a residential area is likely to cause harmful interference in which case the user will be required to correct the interference at his own expense.

Security Statement

In rare instances, unauthorized individuals make connections to the telecommunications network through the use of remote access features. In such event, applicable tariffs require that the customer pay all network charges for traffic. Lucent Technologies cannot be responsible for such charges and will not make any allowance or give any credit for charges that result from unauthorized access.

Trademarks

5ESS, DACScan, LGX, Safari, SLC, ST, SPQ, and Western Electric are registered trademarks of Lucent Technologies.
LineReach is a trademark of Lucent Technologies.
ANSI is a registered trademark of American National Standards Institute, Inc.
Common Language is a registered trademark and CLEI, CLLI, CLCI, and CLFI are trademarks of Bell Communications Research, Inc.
Gateway 2000 is a registered trademark of Gateway 2000, Inc.
Hayes is a registered trademark, and V-Series is a trademark of Hayes Microcomputer Products, Inc.
HP is a registered trademark of Hewlett-Packard Company
Microsoft, MS-DOS and Windows NT are registered trademarks of Microsoft Corporation.
National Electrical Code is a registered trademark of the National Fire Protection Association, Inc.
NEC is a registered trademark of Nippon DenkiKabushiki Kaisha
NFPA is a registered trademark of National Fire Protection Association, Inc.
PairGain is a registered trademark of PairGain Technologies, Inc.
Paradyne and Safari are registered trademarks of AT&T.
Penril is a registered trademark of Penril Corporation.
PROCOMM is a registered trademark of Datastorm Technologies, Inc.
Raynet is a registered trademark of Raychem Corporation.
Rides is a registered trademark of Ericcson Raynet.
SUN is a registered trademark of SUN Microsystems, Inc. in the United States and other countries.
SPARC is a registered trademark of SPARC International, Inc. licensed exclusively to SUN Microsystems, Inc. All SPARC trademarks are used under license and are trademarks or registered trademarks of SPARC International, Inc. in the United States and other countries Products bearing SPARC trademarks are based upon an architecture developed by Sun Microsystems, Inc.
SPOTS CU is a registered trademark of AT&T.
Styrofoam is a registered trademark of The Dow Chemical Company

TITAN is a trademark of Tellabs, Inc.
Toshiba is a registered trademark of Kabushiki Kaisha Toshiba.
UL is a registered trademark of Underwriter's Laboratories.
UNIX is a registered trademark in the United States and other countries licensed exclusively through X/Open Company Limited.

Warranty

Lucent Technologies provides a 5-year limited warranty for this product. For more information, consult your local Account Executive.

Document Ordering Information

The ordering number for this document is 363-206-305. To order this document, call 1-888-582-3688. For more ordering information, refer to "How to Order Documents" in the Section "About this Document."

Customer Assistance and Technical Support

The Lucent Technologies Regional Technical Assistance Center (RTAC) provides a technical assistance telephone number which is monitored 24 hours a day. To receive technical assistance, simply call 1-800-225-RTAC.

Documentation Support Telephone Number

Lucent Technologies provides a telephone number for customers to report errors or to ask questions about the information in this document. The support telephone number is 1-800-645-6759. To order documents, see “Document Ordering Information Products.

Developed by Lucent Technologies Network Systems Customer Training and Information Products.

How Are We Doing?

Title: *DDM-2000 FiberReach Multiplexer, Wideband/Narrowband Shelf, TARP Release 3 and Later, User Service Manual (TOP) - Volume ll*

Identification No.: 363-206-305 Issue No.: 3 Date: June 2000

Lucent Technologies welcomes your feedback on this Customer Information Product (CIP). Your comments can be of great value in helping us improve our CIPs.

1. Please rate the effectiveness of this CIP in the following areas:

	Excellent	Good	Fair	Poor	Not Applicable
Ease of Use					//////////////////
Clarity					//////////////////
Completeness					//////////////////
Accuracy					//////////////////
Organization					//////////////////
Appearance					//////////////////
Examples					
Illustrations					
Overall Satisifaction					//////////////////

2. Please check the ways you feel we could improve this CIP.

❒ Improve the overview/introduction
❒ Improve the table of contents
❒ Improve the organization
❒ Include more figures
❒ Add more examples
❒ Add more detail
❒ Make it more concise/brief
❒ Add more step-by-step procedures/tutorials
❒ Add more troubleshooting information
❒ Make it less technical
❒ Add more/better quick reference aids
❒ Improve the index

Please provide details for the suggested improvement. _____

_____

3. What did you like most about this CIP?

_____

_____

4. Feel free to write any comments below or on an attached sheet.

_____

_____

_____

_____

If we may contact you concerning your comments, please complete the following:

Name: _____ Telephone Number: _____

Company/Organization: _____ Date: _____

Address: _____

When you have completed this form, please fold, tape and return to address on back
or Fax to: 910 727-3043.

---------- Do Not Cut — Fold Here And Tape ----------

NO POSTAGE
NECESSARY
IF MAILED
IN THE
UNITED STATES

Lucent Technologies
Bell Labs Innovations

BUSINESS REPLY MAIL

FIRST CLASS PERMIT NO. 1999 GREENSBORO, NC

POSTAGE WILL BE PAID BY ADDRESSEE

DOCUMENTATION SERVICES
2400 Reynolda Road
Winston-Salem, NC 27199-2029

How Are We Doing?

Title: *DDM-2000 FiberReach Multiplexer, Wideband/Narrowband Shelf, TARP Release 3 and Later, User/Service Manual (TOP) - Volume ll*

Identification No.: 363-206-305 Issue No.: 3 Date: June 2000

Lucent Technologies welcomes your feedback on this Customer Information Product (CIP). Your comments can be of great value in helping us improve our CIPs.

1. Please rate the effectiveness of this CIP in the following areas:

	Excellent	Good	Fair	Poor	Not Applicable
Ease of Use					//////////////////
Clarity					//////////////////
Completeness					//////////////////
Accuracy					//////////////////
Organization					//////////////////
Appearance					//////////////////
Examples					
Illustrations					
Overall Satisifaction					//////////////////

2. Please check the ways you feel we could improve this CIP.

❒ Improve the overview/introduction
❒ Improve the table of contents
❒ Improve the organization
❒ Include more figures
❒ Add more examples
❒ Add more detail
❒ Make it more concise/brief
❒ Add more step-by-step procedures/tutorials
❒ Add more troubleshooting information
❒ Make it less technical
❒ Add more/better quick reference aids
❒ Improve the index

Please provide details for the suggested improvement. _____

_____

3. What did you like most about this CIP?

_____

_____

4. Feel free to write any comments below or on an attached sheet.

_____

_____

_____

_____

If we may contact you concerning your comments, please complete the following:

Name: _____ Telephone Number: _____

Company/Organization: _____ Date: _____

Address: _____

When you have completed this form, please fold, tape and return to address on back
or Fax to: 910 727-3043.

---------- Do Not Cut — Fold Here And Tape ----------

NO POSTAGE
NECESSARY
IF MAILED
IN THE
UNITED STATES

Lucent Technologies
Bell Labs Innovations

BUSINESS REPLY MAIL

FIRST CLASS PERMIT NO. 1999 GREENSBORO, NC

POSTAGE WILL BE PAID BY ADDRESSEE

DOCUMENTATION SERVICES
2400 Reynolda Road
Winston-Salem, NC 27199-2029

Operation and Maintenance (TOP)
Wideband Shelf

Overview 1

TOP Section Organization 1

How to Use This TOP Section 2

- Screen Display and Panel Stamping Fonts 3
- DDM-2000 FiberReach Installation 4

Safety Instructions 4

- Product Safety Labels 4

Lightwave Safety Guidelines 5

- General Laser Information 5
- Lasers and Eye Damage 5
- Classification of Lasers 6
- Lightwave Safety Precautions 6
- Safety Precautions for Enclosed Systems 7
- Safety Precautions for Unenclosed Systems 8

Electrostatic Discharge (ESD) Considerations 9

General Safety Instructions 11

Installation Safety Instructions 12

Operation and Maintenance (TOP)
Wideband Shelf

Overview

This section supports operation and maintenance of the DDM-2000 FiberReach Multiplexer Wideband Shelf. It includes the following five separate tabs:

- Acceptance — Yellow tab
- System Turnup/Circuit Order — Orange tab
- Operation — Green tab
- Trouble Clearing — Red tab
- Detailed Level Procedures — Blue tab.

TOP Section Organization

The **Acceptance** tab covers procedures to check the shelf or system after the shelf has been equipped or after the system has been established.

The **System Turnup/Circuit Order** tab includes procedures for the following:

a. Equipping (turning up) a shelf in a looped back condition for the first time

b. Establishing an end-to-end system after the shelf has been equipped

c. Establishing initial end-to-end DS1, T1, DS3, OC-3c, or HDSL service

d. Adding or discontinuing DS1/T1, DS3, or HDSL service to an in-service system

e. Adding a new shelf to existing configurations

f. Upgrading software to a new release

g. Establishing OC-1 single-homed or dual-homed FiberReach access via DDM-2000 OC-3 or OC-12 backbone ring

h. Establishing stand-alone OC-1 FiberReach access via DDM-2000 OC-3 host

i. Changing protection configuration from 1X1 to 1X7 or 1X7 to 1X1 (out of service)

j. Establishing single-homed FiberReach OC-3 access via DDM-2000 OC-12 backbone ring

k. Establishing dual-homed FiberReach OC-3 access via DDM-2000 OC-12 backbone ring

l. Establishing single-homed FiberReach OC-3 or OC-12 access via FT-2000 OC-48 backbone ring

m. Establishing dual-homed FiberReach OC-3 or OC-12 access via FT-2000 OC-48 backbone ring

n. Add new DDM-2000 FiberReach node operating at an OC-3 rate to an OC-3 ring

o. Establishing FiberReach OC-3 linear extension via DDM-2000 OC-3 or OC-12 backbone ring

p. Establishing FiberReach OC-3 or OC-12 linear extension via WaveStar TDM 2.5G OC-48 or 10G OC-192 backbone ring

q. Establishing FiberReach single-homed OC-3 or OC-12 access via WaveStar TDM 2.5G OC-48 or 10G OC-192 backbone ring

r. Establishing FiberReach dual-homed OC-3 or OC-12 access via WaveStar TDM 2.5G OC-48 or 10G OC-192 backbone ring

The **Operation** tab covers procedures for operating the system, such as connecting and using the craft interface terminal (CIT), displaying alarm and status conditions, installing a new generic program, etc.

The **Trouble Clearing** tab covers alarms and trouble reports.

The **Detailed Level Procedures** (DLP) tab contains all of the DLPs, beginning with DLP-500, used in this manual.

How to Use This TOP Section

To find the instructions for performing acceptance, system turnup/circuit order, operation, or trouble clearing tasks, proceed as follows:

1. Find your job in the Task Index under the appropriate colored tab and go to the referenced procedure (for example: **Acceptance IXL-001**). Or you may use the Master Task Index (**IXL-001**) in this introduction.
2. Turn to the indicated director level, detail level, or trouble-clearing procedure listed under the "**GO TO**" column for the task being performed.

Procedures in this TOP are of three types:

a. Non-Trouble-Clearing Procedures (**NTP**) — a director level procedure that lists normal work items to perform other than trouble clearing.

b. Trouble Analysis Procedure (**TAP**) — a director level procedure that contains step-by-step trouble-clearing instructions to locate and/or fix troubles.

c. Detailed Level Procedures (**DLP**) — a detailed level procedure that contains step-by-step instructions.

All procedures in each section of this TOP are in numerical order, regardless of the type of procedure (see Table 1). Table 1, which lists all the procedures used in this TOP, is provided as a reference only. It should not be used alone in finding instructions for performing tasks.

3. Perform all the items in the director-level procedure in the indicated order unless it sends you to another director-level procedure. When you complete a director-level procedure, you have finished the task. Where more detailed information is required, you will be sent to a **DLP-( )**. You may also be sent to a DLP by another DLP. All DLPs are in the **Detailed Level Procedures** tab section of this manual.
4. **IMPORTANT**: Unless otherwise directed, when you complete a DLP, you **MUST** return to the procedure that sent you there.

5. **IMPORTANT**: Unless otherwise directed, if one director-level procedure sends you to another director-level procedure, you should not return to the first director-level procedure after you complete the second.
6. Sometimes you will be asked to verify that things have occurred. This may take the form of a formal statement of the expected response. At other times, the instructions will merely state *verify that ...* .

   If the expected response is not observed and a specific trouble clearing reference is not made, you should reference the trouble analysis procedures under the **Trouble Clearing** tab to clear the trouble.
7. When performing tests or procedures using a CIT and system commands, you should refer to the "Commands and Reports" section of this manual for a description of the command, its parameters, and the output messages associated with the command.
8. If a procedure refers to software releases, for example Release 2 or later, it refers to all releases with a numerical value of 2 or higher.
9. If you need assistance in clearing a trouble after completing all the applicable trouble-clearing procedures in this section, contact your local or regional maintenance assistance group. The telephone number for the Lucent Technologies Regional Technical Assistance Center (RTAC) is 1-800-225-RTAC.

Circuit packs being returned for repair should be sent to the following address:

Lucent Technologies
Returned Goods Dept.
Dept. JC0221210
1600 Osgood Street
North Andover, MA 01845

Telephone: (978) 960-5179

Facsimile: (978) 960-1705

Screen Display and Panel Stamping Fonts

The procedures in this manual use a monospace font to identify actual text on a screen or a response displayed from the system. A **bold** font identifies panel stamping, such as alarm names or circuit pack names. Also, the **bold** font is used throughout this manual for emphasis.

DDM-2000 FiberReach Installation

363-206-310, *DDM-2000 FiberReach Multiplexer Installation Manual*, is available for customers planning to install the equipment themselves. To acquire this manual, refer to "How to Order Documents" in the **About This Document** tab.

Lucent Technologies recommends that ONLY designated Lucent Technologies cables be used with DDM-2000 FiberReach. Failure to use these cables will void the product warranty.

Safety Instructions

Product Safety Labels

These instructions involve lasers, lightwave optical cable and connectors, and precautions when handling circuit packs to prevent damage from electrostatic discharge. The appropriate user/service manual contains admonishments in the form of **DANGERS, WARNINGS,** and **CAUTIONS** that must be followed at all times.

These admonishments have the following definitions:

- **DANGER** indicates the presence of a hazard that *will* cause death or severe personal injury if the hazard is not avoided.
- **WARNING** indicates the presence of a hazard that *can* cause death or severe personal injury if the hazard is not avoided.
- **CAUTION** indicates the presence of a hazard that *will* or *can* cause minor personal injury or property damage if the hazard is not avoided. The caution is also used for property-damage-only accidents. This includes equipment damage, loss of software, or service interruption.

The alert symbol appears throughout these products and the appropriate user/service manual to alert the user to the presence of important operating and maintenance (servicing) instructions for the DDM-2000 FiberReach.

Lightwave Safety Guidelines

General Laser Information

Lightwave/lightguide systems, their associated test sets, and similar operating systems use semiconductor laser transmitters that emit light at wavelengths between approximately 800 nanometers and 1600 nanometers. The emitted light is above the red end of the visible spectrum, which is normally not visible to the human eye. Although radiant energy at near-infrared wavelengths is officially designated invisible, some people can see the shorter wavelength energy even at power levels several orders of magnitude below any that have been shown to cause injury to the eye.

Conventional lasers can produce an intense beam of monochromatic light. The term monochromaticity means a single wavelength output of pure color that may be visible or invisible to the eye. A conventional laser produces a small-size beam of light, and because the beam size is small, the power density (also called irradiance) is very high. Consequently, lasers and laser products are subject to federal and applicable state regulations as well as international standards for their safe operation.

A conventional laser beam expands very little over distance or is said to be very well collimated. Thus, conventional laser irradiance remains relatively constant over distance. However, lasers used in lightwave systems have a large beam divergence, typically 10 to 20 degrees. Here, irradiance obeys the inverse square law (doubling the distance reduces the irradiance by a factor of 4) and rapidly decreases over distance.

Lasers and Eye Damage

Light energy emitted by laser and high-radiance LEDs in the 400-1400nm range may cause eye damage if absorbed by the retina. When a beam of light enters the eye, the eye magnifies and focuses the energy, magnifying the irradiance. The irradiance of energy that reaches the retina is approximately 10^5 or 100,000 times that at the cornea and, if sufficiently intense, may cause a retinal burn.

The damage mechanism at the wavelengths used in telecommunications is thermal in origin (that is, damage caused by heating). Therefore, a specific amount of energy is required for a definite time to heat an area of retinal tissue. Damage is not instantaneous. It occurs only when one looks at the light sufficiently long enough that the product of the retinal irradiance and the viewing time exceeds the damage threshold. Light energies above 1400 nm would cause surface and skin burns and do not affect the retinal area.

Classification of Lasers

Manufacturers of lasers and laser products in the U.S. are regulated by the Food and Drug Administration's Center for Devices and Radiological Health (FDA/CDRH) under 21 CFR 1040. These regulations require manufacturers to certify each laser or laser product as belonging to one of four major Classes — Class I, II, IIa, IIIa, IIIb, or IV. Lasers are classified according to the accessibly emission limits and their potential for causing injury. Lightwave systems are generally classified as Class I, because, under normal operating conditions, all energized laser transmitting circuit packs are terminated on optical fibers which enclose the laser energy with fiber sheath, forming a protective housing. Also, covers are in place over the circuit pack shelves.

Lightwave Safety Precautions

In its normal operating mode, a lightwave system is totally enclosed and presents no risk of eye injury. It is a Class I system under the FDA/CDRH scheme.

The lightguide cables that interconnect various components of a lightwave system can disconnect or break, and may expose people to lightwave emission. Also, certain measures and maintenance procedures may expose the technician to emission from the semiconductor laser during installation and servicing. Unlike more familiar laser devices, such as solid-state and gas lasers, the emission pattern of a semiconductor laser results in a highly divergent beam. In a divergent beam, the irradiance (power intensity) decreases rapidly with distance. The greater the distance, the less energy will enter the eye and the less potential risk for eye injury.

Inadvertently viewing an unterminated fiber or damaged fiber with the unaided eye at distances greater than 5 to 6 inches normally will not cause eye injury provided the power in the fiber is less than a few mW at the shorter wavelengths and higher at the longer wavelengths. However, damage may occur if an optical instrument such as a microscope, magnifying glass, or eye loupe is used to stare at the energized fiber end.

CAUTION:
Use of controls or adjustments or performance of procedures other than those specified herein may result in hazardous laser radiation exposure.

Safety Precautions for Enclosed Systems

Under normal operating conditions, lightwave transmission systems are completely enclosed; nonetheless, the following precautions should be observed:

1. Because of the potential for eye damage, technicians should neither disconnect any lightwave cable nor splice and stare into the optical connectors terminating the cables.
2. Under no circumstances shall lightwave/lightguide operations be performed by a technician before satisfactorily completing an approved training course.
3. Since viewing lightwave emission directly with an optical instrument, such as an eye loupe, greatly increases the risk of eye damage, an appropriate label must appear in plain view on the front of the main frame or lightguide termination/interconnection equipment. The safety label (Figure 1) shall read as follows:

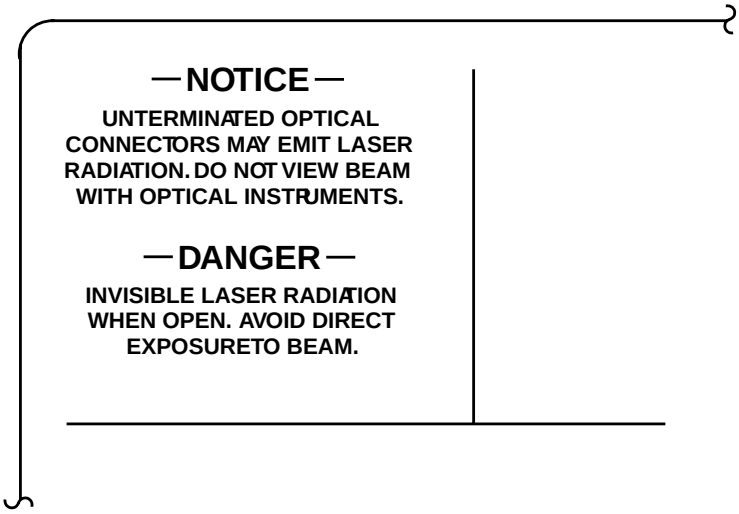

Figure 1. Safety Label

Safety Precautions for Unenclosed Systems

During service, maintenance, or restoration, a lightwave transmission system is considered unenclosed. Under these conditions, follow these practices:

1. Only authorized, trained personnel shall be permitted to do service, maintenance, and restoration. Avoid exposing the eye to emissions from unterminated, energized optical connectors at close distances. Connectors associated with lightwave regenerators are recessed, which limits exposure distance. However, technicians removing or replacing regenerators should not stare or look directly into the vacant regenerator slot with optical instruments or magnifying lenses. (Normal eyewear or indirect viewing instruments are not considered magnifying lenses or optical instruments.)
2. Only authorized, trained personnel shall use the lightwave test equipment during installation or servicing since this equipment contains semiconductor lasers. (Some examples of lightguide test equipment are OTDRs, Hand-Held Loss Test Sets, and Feature Finders.)
3. Under no circumstances shall any personnel scan a fiber with an optical test set without verifying that all lightwave sources on the fiber are turned off.
4. All unauthorized personnel shall be excluded from the immediate area of lightwave transmission systems during installation and service.

Consult ANSI Z136.1 American National Standard for Safe Use of Lasers for guidance on the safe use of lasers in the workplace.

Electrostatic Discharge (ESD) Considerations

CAUTION:
Industry experience has shown that all integrated circuit packs can be damaged by static electricity that builds up on work surfaces and personnel. The static charges are produced by various charging effects of movement and contact with other objects. Dry air allows greater static charges to accumulate. Higher potentials are measured in areas with low relative humidity, but potentials high enough to cause damage can occur anywhere.

The following precautions should be observed when handling circuit packs in order to prevent damage by ESD:

- Assume all circuit packs contain solid state electronic components that can be damaged by ESD. Use only Lucent Technologies manufactured UL recognized circuit packs specified in the appropriate user/service manual in this system.
- When handling circuit packs (storing, inserting, removing, etc.) or when working on the backplane, always wear a grounded wrist strap or wear a heel strap and stand on a grounded, static-dissipating floor mat. If a static-dissipating floor mat is used, be sure that it is clean.
- Handle all circuit packs by the faceplate or latch and by the top and bottom outermost edges. Never touch the components, conductors, or connector pins.
- Observe warning labels on bags and cartons. Whenever possible, do not remove circuit packs from antistatic packaging until ready to insert them into slots.
- If possible, open all circuit packs at a static-safe work position, using properly grounded wrist straps and static-dissipating table mats. If a static-dissipating table mat is used, be sure that it is clean.
- Always store and transport circuit packs in static-safe packaging. Shielding is not required unless specified.
- Keep all static-generating materials such as food wrappers, plastics, and Styrofoam®* containers away from all circuit packs. Upon removal from the bay, immediately put circuit packs into static-safe packages.
- Whenever possible, maintain relative humidity above 20 percent.

To reduce the possibility of ESD damage, shelves are equipped with grounding jacks to enable personnel to ground themselves using wrist straps (see Figure 2) while handling circuit packs or working on a shelf(s). The jacks for connection of wrist straps are located at the lower right-hand corner of each shelf and are labeled. When grounding jacks are not provided, an alligator clip adapter enables connection to bay frame ground.

* Registered trademark of the Dow Chemical Company.

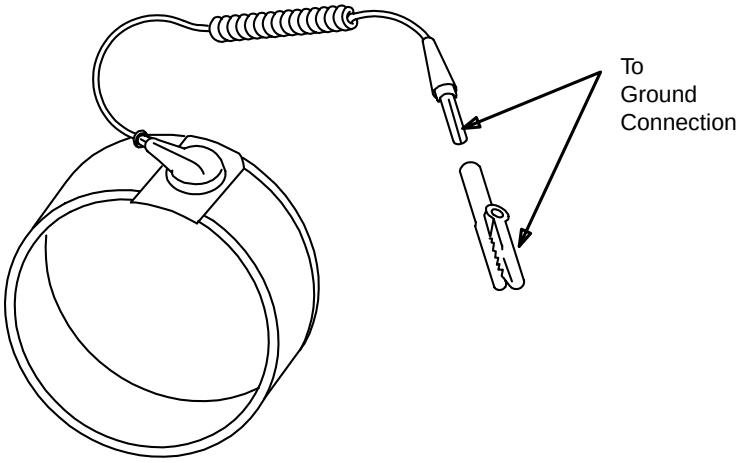

Figure 2. Static Control Wrist Strap

General Safety Instructions

GENERAL SAFETY INSTRUCTIONS

1. Read and understand all instructions.
2. Follow all warnings and instructions marked on the product.
3. Do not place this product on an unstable cart, stand, or table. The product may fall, causing serious damage to the product.
4. Slots and openings in this product's back or bottom are provided for ventilation. To protect it from overheating, these openings must not be blocked or covered. This product should not be placed in a built-in installation unless proper ventilation is provided. For information on proper ventilation requirements, consult the "Equipment Installation Considerations" section of 363-206-310, *DDM-2000 FiberReach Multiplexer Installation Manual*.
5. This product should be operated only from the type of power source indicated on the marking label. For information on proper electrical distribution and power requirements, refer to the "Power" and "Technical Specifications" sections of the appropriate user/service manual.
6. Never push objects of any kind into this product through cabinet slots as they may touch dangerous voltage points or short out parts that could result in a risk of fire or electrical shock. Never spill liquid of any kind on the product.
7. To reduce the risk of electrical shock, do not disassemble this product. Service should be performed by trained personnel only. Opening or removing covers and/or circuit packs may expose you to dangerous voltages or other risks. Incorrect reassembly can cause electrical shock when the unit is subsequently used.

   CAUTION:
   Disconnect two (2) power connections when removing power from the system.

8. Use only Lucent Technologies manufactured UL-recognized circuit packs. Recognized circuit packs are listed in the appropriate user/service manual.

SAVE THESE INSTRUCTIONS.

Installation Safety Instructions

INSTALLATION SAFETY INSTRUCTIONS

1. Read and understand all instructions.
2. Installation and maintenance procedures must be followed and performed by trained personnel only.
3. All DS1 interfaces should not leave the building premises unless connected to telecommunication devices providing primary or secondary protection, as applicable.
4. For information on proper mounting instructions, consult 363-206-310, *DDM-2000 FiberReach Multiplexer Installation Manual*.
5. Never install telecommunication wiring during a lightning storm.
6. Never install telecommunication connections in wet locations.
7. Never touch uninsulated telecommunication wires or terminals unless the telecommunication line has been disconnected at the DS1 interface.
8. Use caution when installing or modifying telecommunication lines.

SAVE THESE INSTRUCTIONS.

Master Task Index
Operation and Maintenance

ABN Indication — Clear . . . . . Trouble Clearing: TAP-109

CIT — Activate Optional System Features . . . . . Detailed Level Procedure: DLP-512

CIT — Connect and Establish Session . . . . . Detailed Level Procedure: DLP-521

CIT — Enable or Disable System Security
and/or Edit, Delete, or Enter a User's Login . . . . Detailed Level Procedure: DLP-500

DS1 Service — Add New
(Group Already in Service) . . . . . Circuit Order: NTP-006

T1 Service — Add New
(Low-Speed Slots Already in Service) . . . . . Circuit Order: NTP-014

HDSL Service — Add New
(Group Already in Service) . . . . . Circuit Order: NTP-018

DS1 Service — Discontinue . . . . . Circuit Order: NTP-005

DS3 Service — Discontinue . . . . . Circuit Order: NTP-026

T1 Service — Discontinue . . . . . Circuit Order: NTP-015

HDSL Service — Discontinue . . . . . Circuit Order: NTP-019

DS1 Service — Establish Initial End-to-End
(Group Equipped but Not in Service) . . . . . System Turnup: NTP-004

DS3 Service — Establish Initial End-to-End
(Group Equipped but Not in Service) . . . . . System Turnup: NTP-025

T1 Service — Establish Initial End-to-End
(Low-Speed Slot Equipped but Not in Service . . System Turnup: NTP-013

OC-3c Service — Establish . . . . . System Turnup: NTP-016

HDSL Service — Establish Initial
(Group Equipped but Not in Service) . . . . . System Turnup: NTP-017

FAULT LED Indication (Flashing) — Clear . . . . . Trouble Clearing: TAP-110

LEDs — Test. . . . . Detailed Level Procedure: DLP-509

NE ACTY Alarm Only — Clear . . . . . Trouble Clearing: TAP-117

SYSCTL — Install BBG8/BBG8B
New Shelf. . . . . Detailed Level Procedure: DLP-539

SYSCTL — Replace BBG8/BBG8B
In Service. . . . . Detailed Level Procedure: DLP-501

Accept DDM-2000 FiberReach Multiplexer
Shelf (Looped Back) — Wideband. . . . . Acceptance: NTP-003

Accept End-to-End DDM-2000 System
(Wideband) . . . . . Acceptance: NTP-004

Accept DDM-2000 FiberReach Multiplexer
(Equipped) — Wideband (Overview) . . . . . Acceptance: NTP-002

Add New DDM-2000 FiberReach Node
To a Dual Homed OC-1/OC-3/OC-12
Ring Off an OC-3/OC-12/OC-48/OC-192 Ring . Circuit Order: NTP-002

Add New DDM-2000 FiberReach OC-3 or
OC-12 Node To an OC-3 or OC-12 Ring . . . . . Circuit Order: NTP-024

Add New DS1 Service — Group
Already in Service . . . . . Circuit Order: NTP-006

Add New T1 Service — Low Speed
Slots Already in Service. . . . . Circuit Order: NTP-014

Add New HDSL Service — Group
Already in Service . . . . . Circuit Order: NTP-018

Alarm — Critical (CR) — Clear . . . . . Trouble Clearing: TAP-101

Alarm — Major (MJ) — Clear . . . . . Trouble Clearing: TAP-102

Alarm — Minor (MN) — Clear . . . . . Trouble Clearing: TAP-112

Alarm — NE ACTY Only — Clear . . . . . Trouble Clearing: TAP-117

Alarm — Power Minor (PMN) — Clear . . . . . Trouble Clearing: TAP-104

Change DS1 Protection Bus Module (1X1 or
1X7) — Low-Speed Slots Out-of-Service . . . . . Circuit Order: NTP-012

Copy Diskettes (Floppy Disks) and
Make Backups . . . . . Detailed Level Procedure: DLP-534

Critical (CR) Alarm — Clear. . . . . Trouble Clearing: TAP-101

Discontinue DS1 Service . . . . . Circuit Order: NTP-005

Discontinue T1 Service . . . . . Circuit Order: NTP-015

Discontinue DDM-2000 FiberReach Node (Shelf)
From DDM-2000 OC-3 Path Switched Ring . . . Circuit Order: NTP-003

Diskettes (Floppy Disks) —
Copy and Make Backups . . . . . Detailed Level Procedure: DLP-534

Equipment DDM-2000 FiberReach Wideband
Shelf (Looped Back) . . . . . System Turnup: NTP-007

Establish FiberReach OC-3 Release 4 Linear
Extension via DDM-2000 OC-3 Release 15
Backbone Ring . . . . . System Turnup: NTP-030

Establish FiberReach OC-3 Release 4
Linear Extension via DDM-2000 OC-12
Backbone Ring . . . . . System Turnup: NTP-031

Establish FiberReach OC-3 or OC-12
Release 4 Linear Extension via FT-2000
OC-48 Backbone Ring . . . . . System Turnup: NTP-032

Establish FiberReach OC-3 or OC-12
Release 4 Linear Extension via WaveStar
TDM 2.5G OC-48 or 10G OC-192
Backbone Ring . . . . . System Turnup: NTP-034

Establish OC-1 Dual-Homed FiberReach
Access via DDM-2000 OC-3 or OC-12
Backbone Ring . . . . . System Turnup: NTP-009

Establish FiberReach Single-Homed Release 4
OC-3 or OC-12 Access via WaveStar
TDM 2.5G OC-48 or 10G OC-192
Backbone Ring . . . . . System Turnup: NTP-035

Establish FiberReach Dual-Homed Release 4
OC-3 or OC-12 Access via WaveStar
TDM 2.5G OC-48 or 10G OC-192
Backbone Ring . . . . . System Turnup: NTP-036

Establish Single-Homed FiberReach OC-3
Access via DDM-2000 OC-12 Backbone Ring . . System Turnup: NTP-020

Establish Single-Homed FiberReach OC-3 or
OC-12 Access via FT-2000 OC-48 Backbone
Ring . . . . . System Turnup: NTP-021

Establish Dual-Homed FiberReach OC-3 or
OC-12 Access via FT-2000 OC-48 Backbone
Ring . . . . . System Turnup: NTP-022

Establish Dual-Homed FiberReach OC-3
Access via DDM-2000 OC-12 Backbone Ring . . System Turnup: NTP-023

Establish Initial End-to-End DS1 Service
(Group Equipped but Not in Service) . . . . . System Turnup: NTP-004

Establish Initial End-to-End T1 Service
(Low-Speed Slot Equipped but Not in Service . . System Turnup: NTP-013

Establish DDM-2000 OC-3c (STS-3c) Service . System Turnup: NTP-016

Establish Initial HDSL Service — Group
Equipped But Not in Service . . . . . System Turnup: NTP-017

Establish Initial End-to-End DS3 Service —
Group Equipped But Not in Service . . . . . System Turnup: NTP-025

Establish Remote Login . . . . . Detailed Level Procedure: DLP-522

Establish OC-1 Single-Homed FiberReach
Access via DDM-2000 OC-3 or OC-12
Backbone Ring. . . . . System Turnup: NTP-008

Establish Stand-Alone FiberReach Access
via DDM-2000 OC-3 Host Shelf. . . . . System Turnup: NTP-010

Discontinue End-to-End DS1 Service . . . . . Circuit Order: NTP-005

Discontinue End-to-End DS3 Service . . . . . Circuit Order: NTP-026

Discontinue End-to-End HDSL Service . . . . . Circuit Order: NTP-019

Discontinue End-to-End T1 Service. . . . . Circuit Order: NTP-015

Generic Program — Install New . . . . . Detailed Level Procedure: DLP-525

Generic Software Version Identification
(Retrieve) . . . . . Detailed Level Procedure: DLP-531

Install SYSCTL BBG8/BBG8B . . . . . Detailed Level Procedure: DLP-539

Replace SYSCTL BBG8/BBG8B . . . . . Detailed Level Procedure: DLP-501

Install DS1/DS1PM Circuit Packs . . . . . Detailed Level Procedure: DLP-508

Install HDSL Circuit Packs . . . . . Detailed Level Procedure: DLP-540

Install DS3 Circuit Packs . . . . . Detailed Level Procedure: DLP-546

Install OLIU Circuit Packs . . . . . Detailed Level Procedure: DLP-504

Install T1EXT Circuit Packs . . . . . Detailed Level Procedure: DLP-507

Install DS1 Protection Bus Module (1X1 or
1X7) — System Out-of-Service . . . . . Circuit Order: NTP-011

Install New Generic Program
Network Element Software
New Shelf Installation
Only BBG8/BBG8B SYSCTL Installed. . . . . Detailed Level Procedure: DLP-525

Install New Generic Program
Network Element Software
Local Shelf Download
In-Service System . . . . . Detailed Level Procedure: DLP-536

Install New Generic Program
Network Element Software
Remote Shelf Download
In-Service System . . . . . Detailed Level Procedure: DLP-537

Login — Establish Remote . . . . . Detailed Level Procedure: DLP-522

Maintenance Philosophy . . . . . Trouble Clearing: TAD-100

Major (MJ) Alarm — Clear . . . . . Trouble Clearing: TAD-102

Minor (MN) Alarm — Clear . . . . . Trouble Clearing: TAP-112

Obtain Equipment,
Check Software,
Prepare and Connect PC . . . . . Detailed Level Procedure: DLP-541

Out Of Sevice UpgradeFrom 26-Type
to 28-Type or 29-Type OLIU Circuit Packs . . . . . Detailed Level Procedure: DLP-543

Option Settings — Check (Set) . . . . . Detailed Level Procedure: DLP-513

Circuit Pack — Replace (Reference Only) . . . . . Detailed Level Procedure: DLP-523

Power Minor (PMN) Alarm — Clear . . . . . Trouble Clearing: TAP-104

Remote Login — Establish . . . . . Detailed Level Procedure: DLP-522

Replace Circuit Pack (Reference Only) . . . . . Detailed Level Procedure: DLP-523

Replace BBG8/BBG8B Circuit Pack -
In Service . . . . . Detailed Level Procedure: DLP-501

Service — Discontinue DS1 . . . . . Circuit Order: NTP-005

Service — Discontinue T1 . . . . . Circuit Order: NTP-015

Service — Discontinue DS3 . . . . . Circuit Order: NTP-026

Service — Discontinue HDSL . . . . . Circuit Order: NTP-019

Service — Establish Initial End-to-End DS1
(Group Equipped But Not in Service) . . . . . System Turnup: NTP-004

Service — Establish Initial End-to-End T1
(Low-Speed Slot Equipped But Not in Service) . System Turnup: NTP-013

Service — Establish Initial End-to-End DS3
(Group Equipped But Not in Service) . . . . . System Turnup: NTP-025

Service — Establish Initial HDSL
(Group Equipped But Not in Service) . . . . . System Turnup: NTP-017

Service — Establish DDM-2000 OC-3c
OC-3c (STS-3c) Service . . . . . System Turnup: NTP-016

Shelf — Add DDM-2000 FiberReach Node
To an OC-1/OC-3/OC-12 Ring Off an
OC-3/OC-12/OC-48/OC-192 Ring . . . . . Circuit Order: NTP-002

Shelf — Add New DDM-2000 FiberReach
OC-3 or OC-12 Node To an OC-3 or
OC-12 Ring . . . . . Circuit Order: NTP-024

Shelf — Equip DDM-2000 FiberReach Wideband
Shelf (Looped Back) . . . . . System Turnup: NTP-007

Software Version ID — Retrieve . . . . . Detailed Level Procedure: DLP-531

Test LEDs. . . . . Detailed Level Procedure: DLP-509

Test (Accept) DDM-2000 FiberReach Multiplexer
(Looped Back) — Wideband . . . . . Acceptance: NTP-003

Test (Accept) End-to-End DDM-2000 System
(Network) . . . . . Acceptance: NTP-004

Test (Accept) DDM-2000 FiberReach
Multiplexer (Equipped) — Overview. . . . . Acceptance: NTP-002

Trouble Report — Clear . . . . . Trouble Clearing: TAP-105

Rear Access to the Wall DT Cabinet . . . . . Detailed Level Procedure: DLP-542

Upgrade DDM-2000 OC-3 Ring Network
With FiberReach Shelves to OC-12
Ring Network - In Service . . . . . System Turnup: NTP-033

Numerical List of TOP Procedures

Table A – Numerical List of TOP Procedure (Note)

Acceptance Tab	
IXL-001	Acceptance Task Index
NTP-002	Overview of Acceptance (Test) Procedures for DDM-2000 FiberReach Multiplexer (Equipped) — Wideband
NTP-003	Test (Accept) DDM-2000 FiberReach Multiplexer Shelf (Looped Back) — Wideband
NTP-004	Test (Accept) End-to-End DDM-2000 System (Network) — Wideband Shelf
System Turnup/Circuit Order Tab	
IXL-001	Task Index — System Turnup/Circuit Order
NTP-002	Add New DDM-2000 FiberReach Node to a Dual Homed OC-1/OC-3/OC-12 RIng Off an OC-3/OC-12/OC-48/OC-192 Ring
NTP-003	Discontinue DDM-2000 FiberReach Node (Shelf) From Path Switched Ring Network
NTP-004	Establish Initial End-to-End DS1 Service (Group Equipped but Not in Service)
NTP-005	Discontinue End-to-End DS1 Service
NTP-006	Add New DS1 Service
NTP-007	Equip DDM-2000 FiberReach Wideband Shelf (Looped Back)
NTP-008	Establish OC-1 Single-Homed FiberReach Access via DDM-2000 OC-3 or OC-12 Backbone Ring
NTP-009	Establish OC-1 Dual-Homed FiberReach Access via DDM-2000 OC-3 or OC-12 Backbone Ring
NTP-010	Establish OC-1 Stand Alone FiberReach Access via DDM-2000 OC-3 Host Shelf
NTP-011	Install DS1 Protection Bus Module (1X1 or 1X7) System Out-of-Service
NTP-012	Change DS1 Protection Bus Module (1X1 or 1X7) Low-Speed Slots Out-of-Service
NTP-013	Establish Initial End-to End T1 Service (Low-Speed Slot Equipped but Not in Service)
NTP-014	Add New T1 Service
NTP-015	Discontinue End-to-End T1 Service
NTP-016	Establish DDM-2000 OC-3c (STS-3c) Service

Table A – Numerical List of TOP Procedure (Note)

System Turnup/Circuit Order Tab (Contd)	
NTP-017	Establish Initial HDSL Service (Group Equipped But Not in Service)
NTP-018	Add New HDSL Service (Group Already in Service)
NTP-019	Discontinue End-to-End HDSL Service
NTP-020	Establish Single-Homed FiberReach OC-3 Access via DDM-2000 OC-12 Backbone Ring
NTP-021	Establish Single-Homed FiberReach OC-3 or OC-12 Access via FT-2000 OC-48 Backbone Ring
NTP-022	Establish Dual-Homed FiberReach OC-3 or OC-12 Access via FT-2000 OC-48 Backbone Ring
NTP-023	Establish Dual-Homed FiberReach OC-3 Access via DDM-2000 OC-12 Backbone Ring
NTP-024	Add New DDM-2000 FiberReach OC-3 or OC-12 Node To an OC-3 or OC-12 Ring
NTP-025	Establish Initial End-to-End DS3 Service (Group Equipped But Not in Service)
NTP-026	Discontinue End-to-End DS3 Service
NTP-027	Unused
NTP-028	Unused
NTP-029	Unused
NTP-030	Establish FiberReach OC-3 Release 4 Linear Extension via DDM-2000 OC-3 Release 15 Backbone Ring
NTP-031	Establish FiberReach OC-3 Release 4 Linear Extension via DDM-2000 OC-12 Backbone Ring
NTP-032	Establish FiberReach OC-3 or OC-12 Release 4 Linear Extension via FT-2000 OC-48 Backbone Ring
NTP-033	Upgrade DDM-2000 OC-3 Ring Network With FiberReach OC-3 Shelves to OC-12 Ring Network In Service
NTP-034	Establish FiberReach OC-3 or OC-12 Release 4 Linear Extension via WaveStar TDM 2.5G OC-48 or 10G OC-192 Backbone RIng

Table A – Numerical List of TOP Procedure (Note)

System Turnup/Circuit Order Tab (Contd)	
NTP-035	Establish FiberReach Single-Homed Release 4 OC-3 or OC-12 Access via WaveStar TDM 2.5G OC-48 or 10G OC-192 Backbone RIng
NTP-036	Establish FiberReach Dual-Homed Release 4 OC-3 or OC-12 Access via WaveStar TDM 2.5G OC-48 or 10G OC-192 Backbone RIng
Operations Tab	
IXL-001	Task Index
Trouble Clearing Tab	
TAD-100	Maintenance Philosophy
IXL-001	Task Index
TAP-101	Clear Critical (CR) Alarm
TAP-102	Clear Major (MJ) Alarm
TAP-103	Clear Multiple Failure
TAP-104	Clear Power Minor (PMN) Alarm
TAP-105	Clear Trouble Report
TAP-106	Isolate and Clear Failure
TAP-107	Clear Far End Alarm Using Craft Terminal Interface (CIT)
TAP-108	Clear Obscure Failure Condition
TAP-109	Clear Abnormal (ABN) Indication
TAP-110	Clear Flashing FAULT LED Indication
TAP-111	Clear OLIU or Fiber Trouble Path Protected Ring/1+1 Linear Extensions
TAP-112	Clear Minor (MN) Alarm
TAP-113	Clear Obscure Minor (MN) Alarm
TAP-114	Clear External Minor Alarm at RT
TAP-115	Clear LED Test Trouble
TAP-116	Clear Trouble During Network Element Program Upgrade
TAP-117	Clear NE ACTY Alarm Only
TAP-118	Clear STS/VT AIS Alarm Conditions
TAP-119	Clear Brownout Conditions - Flashing L in FE ID Display

Table A – Numerical List of TOP Procedure (Note)

Detailed Level Procedures (DLP) Tab	
DLP-500	Enable or Disable System Security and/or Edit, Delete, or Enter a User's Login
DLP-501	Replace BBG8/BBG8B SYSCTL - In Service
DLP-502	Replace ECC1/ECC2 User Panel (USPNL) In Service
DLP-503	Install/Remove Lightguide Buildout
DLP-504	Install OLIU Circuit Packs
DLP-505	Connect Optical Loop
DLP-506	DDM-2000 FiberReach Receiver Sensitivity Test
DLP-507	Install T1EXT Circuit Packs
DLP-508	Install DS1/DS1PM Circuit Packs
DLP-509	Perform LED Test
DLP-510	Perform DS1 Transmission Test
DLP-511	Remove –48 V DC User Panel Fuse
DLP-512	Activate Optional System Features Using CIT
DLP-513	Set Circuit Pack Options
DLP-514	Perform Optical Fiber Connections and Verification of Optical Facility
DLP-515	Perform End-to-End OC-1, OC-3, or OC-12 Optical Line Test
DLP-516	Check Local Office Alarms
DLP-517	Perform OC-3c (STS-3c) Transmission Test
DLP-518	Make VT1.5 (DS1) or STS1 (DS3) Cross-Connections Using CIT Single OC-3 or OC-12 Ring Configuration
DLP-519	Test Protection Switching Function
DLP-520	Condition DS1/DS1PM Circuit Pack/Port for New DS1 Service
DLP-521	Connect CIT and Establish Session
DLP-522	Establish Remote Login
DLP-523	Replace Circuit Pack
DLP-524	Install User Panel and Check –48 V DC Office Battery
DLP-525	Install Software Generic Program Network Element Software New Shelf Installation Only BBG8/BBG8B SYSCTL Installed
DLP-526	Make VT1.5 (DS1) or STS1 Cross-Connections Using CIT Single/Dual Homing OC3/OC1 or OC-12/OC-1 Ring Configuration

Table A – Numerical List of TOP Procedure (Note)

Detailed Level Procedures (DLP) Tab (Contd)	
DLP-527	Clean Optical Fibers, Connectors, and Lightguide Buildouts (LBOs)
DLP-528	Make VT1.5 (DS1) Cross-Connections Using CIT Stand-Alone OC3/OC1 Ring Configuration
DLP-529	Check 197A BATTERY LOAD TEST SET
DLP-530	Make Cross-Connections Using CIT Single Homing/Linear Extensions or Dual Homing OC-48/OC-3/12 and OC-192/OC-3/12 Ring Configuration
DLP-531	Retrieve Generic Software Version ID
DLP-532	Perform Test of RT Batteries Using 197A BATTERY LOAD TEST SET
DLP-533	Introduction to the PC
DLP-534	Copy Diskettes and Make Backups
DLP-535	Make Cross-Connections Using CIT Single Homing/Linear Extensions or Dual Homing OC-12/OC-3 Ring Configuration
DLP-536	Install New Software Generic Program Network Element Software Local Shelf Download - In-Service System
DLP-537	Install New Software Generic Program Network Element Software Remote Shelf Download - In-Service System
DLP-538	Condition T1EXT Circuit Pack/Port for New T1 Service
DLP-539	Install BBG8/BBG8B SYSCTL — New Shelf
DLP-540	Install HDSL Circuit Packs
DLP-541	Obtain Equipment, Check Software, Prepare and Connect PC for Software Download
DLP-542	Rear Access to the Wall DT Cabinet
DLP-543	Out Of Service Upgrade From 26-Type to 28-Type or 29-Type OLIU Circuit Packs
DLP-544	Provision STS-1 Path Trace
DLP-545	Perform DS3 Transmission Test
DLP-546	Install DS3 Circuit Packs

Note: Table A is provided as a reference only, and should not be used alone in finding instructions for performing tasks.

Acceptance Task Index

FIND YOUR JOB IN THE LIST BELOW . . . . . THEN GO TO

Acceptance Procedures (Shelf Equipped)

NOTE:
The following procedures are for use in testing the DDM-2000 FiberReach Multiplexer after another organization has equipped it. The procedures test the DDM-2000 FiberReach shelf *after* all circuit packs have been installed and the shelf is looped back or after a system has been established end-to-end. They are not intended to be used for initial system turnup or in establishing an end-to-end system. System Turnup procedures are found in this manual under the **System Turnup/Circuit Order** tab.

Overview of Acceptance (Test) Procedures for DDM-2000 FiberReach Multiplexer (Equipped) — Wideband) . . . . . Acceptance: NTP-002

Test (Accept) DDM-2000 FiberReach Multiplexer Shelf (Looped-Back) — Wideband. . . . . Acceptance: NTP-003

Test (Accept) End-to-End DDM-2000 System (Network) — Wideband Shelf . . . . . Acceptance: NTP-004

Acceptance Procedures (Shelf Unequipped)

NOTE:
Procedures for installing and testing DDM-2000 FiberReach system bays, shelves, and cables are found in 363-206-310, *DDM-2000 FiberReach Multiplexer Installation Manual*.

Overview of Acceptance (Test) Procedures for DDM-2000 FiberReach Multiplexer (Equipped) — Wideband

DO ITEMS BELOW IN ORDER LISTED . . . . FOR DETAILS, GO TO

1. **WARNING:**
Unterminated optical connectors may emit invisible laser radiation. Eye damage may occur if beam is viewed directly or with improper optical instruments. Avoid direct exposure to the beam.

CAUTION:
DDM-2000 FiberReach circuit packs contain static sensitive components which can be damaged by electrostatic discharge. A static ground wrist strap must be worn when handling the circuit packs. See electrostatic discharge considerations in **Trouble Clearing: TAD-100***.*

NOTE:
This procedure is an overview of acceptance procedures that may be performed on the DDM-2000 FiberReach Multiplexer. It assumes that the DDM-2000 FiberReach shelf has been installed and equipped with circuit packs. It also assumes that the shelf is being tested (accepted) by an organization that *did not* install it. This procedure is for reference only. It contains a list of items that may be performed in doing acceptance of a shelf and is not intended to be done in sequence.

Verify that office battery has been applied to the shelf. (**PWR ON A** and **B** LEDs lit on User Panel.) **DLP-524**

DO ITEMS BELOW IN ORDER LISTED	FOR DETAILS, GO TO
2. Set (check) circuit pack option switch settings, if required.	**DLP-513**
3. Test (accept) DDM-2000 FiberReach Multiplexer shelf (looped back) [**Acceptance: NTP-003**].	
4. Test (accept) DDM-2000 FiberReach optical span [**Acceptance: NTP-004**].	
5. If required, perform DS1 transmission tests on each DS1/T1 port.	**DLP-510**
6. If required, perform DS3 transmission tests on each DS3 port.	**DLP-545**
7. Verify/set option settings using **`rtrv-ne/set-ne:`**	
8. Verify/set option settings using **`rtrv-()/set-():`**	**DLP-512**

Test (Accept) DDM-2000 FiberReach Multiplexer Shelf (Looped-Back) — Wideband

DO ITEMS BELOW IN ORDER LISTED . . . . FOR DETAILS, GO TO

1. **WARNING:**
Unterminated optical connectors may emit invisible laser radiation. Eye damage may occur if beam is viewed directly or with improper optical instruments. Avoid direct exposure to the beam.

CAUTION:
DDM-2000 FiberReach circuit packs contain static sensitive components which can be damaged by electrostatic discharge. A static ground wrist strap must be worn when handling the circuit packs. See electrostatic discharge considerations in **Trouble Clearing: TAD-100***.*

NOTE:
This test is to be performed if the DDM-2000 FiberReach is being tested or accepted by an organization that did not install it.

NOTE:
It is assumed that the DDM-2000 FiberReach is installed, powered, equipped, and free of alarms. If it was not left in that condition, notify the organization that installed the DDM-2000 FiberReach that they have not completed the installation or use **Trouble Clearing: IXL-001**.

NOTE:
If the DDM-2000 FiberReach fails to respond in the indicated manner, you should refer the trouble to the organization that installed the DDM-2000 FiberReach or use **Trouble Clearing: IXL-001**.

DO ITEMS BELOW IN ORDER LISTED . . . . . FOR DETAILS, GO TO

NOTE:
The **`rtrv-( )`** commands (**`rtrv-ne`**, **`rtrv-ocl`**, **`rtrv-oc3`**, **`rtrv-sync`**, **`rtrv-tl`**, or **`rtrv-t3`**) may be used to retrieve switch settings except for LBO settings on **DS1, T1EXT**, and **DS3** circuit packs.

Verify correct circuit packs have been installed and option switches have been set correctly, if not already performed.

DLP-513

---

2. **NOTE:**
If the **ACO/TEST** pushbutton is depressed longer than 2 seconds, the **SYSCTL** display will scroll through the software version code and all LEDs will remain lit until the code is displayed.

NOTE:
Software must be installed for this test. If software has not been installed, the letter **"P"** will be displayed in the 7-segment **FE ID** display. If software has not been installed, refer problem to the organization that installed the shelf.

Depress and hold the **ACO/TEST** pushbutton on the User Panel. Verify that all User Panel and circuit pack LEDs and the **SYSCTL** display light. Verify proper version of software is installed.

DLP-509

---

3. Release the **ACO/TEST** pushbutton. Verify that all LEDs on the DDM-2000 go off.

DO ITEMS BELOW IN ORDER LISTED . . . . FOR DETAILS, GO TO

4. **NOTE:**
An `inconsistent DCC values` alarm will occur when the **OLIUs** are looped back. To clear the alarm during a fiber loopback, use the **`set-fecom:`***`address`***`:com=disable`** command to disable the DCC.

Install **OLIU** optical loops between their respective **IN** and **OUT** optical connectors. **DLP-505**

5. **CAUTION:**
The **`init-sys:all`** *command should* **NOT** *be used on an in-service system.*

NOTE:
A craft interface terminal (CIT) is required to access the optional features of the DDM-2000 FiberReach.

NOTE:
During installation and/or initial testing, provisionable parameters may have been set which need to be reset to their default values. STS1 and/or VT1.5 cross-connections may have been made which should be deleted before the system is placed in service. The **`init-sys:all`** command may be used to reset all provisionable parameters and cross-connections to default values.

NOTE:
An `inconsistent DCC` values alarm will occur when the **`init-sys:all`** command is executed. To clear the alarm, use the **`set-fecom:address:com=disable`** command to disable the DCC.

If required, use the command **`init-sys:all`** to reset provisionable parameters to default values.

DO ITEMS BELOW IN ORDER LISTED . . . . . FOR DETAILS, GO TO

6. **NOTE:**
   If the shelf has not been equipped for the required low-speed protection mode, refer trouble to the organization that installed the shelf or use procedures of **NTP-011** to install the correct protection mode assembly.

   Use **`rtrv-eqpt`** command to verify shelf is equipped for low-speed protection mode required (*`Low speed protection mode: 1X1`* or *`1X7`*). Verify proper protection mode designation strip label has been placed on the front of the shelf on the middle designation strip between the **LOW SPEED** slots.

---

7. **NOTE:**
   These procedures assume that the DDM-2000 FiberReach has been connected to the DSX-( ) cross-connect points, as required. **DS1**, **T1EXT**, and/or **DS3** circuit packs must be inserted, as required, before performing these tests.

   Perform transmission and cross-connect tests for each group, as required. Refer any failures to organization that installed the DDM-2000 FiberReach. **DLP-510**

---

8. **NOTE:**
   A craft interface terminal (CIT) is required to access the optional features of the DDM-2000 FiberReach. Refer to the "Commands and Reports" section, and use the **`rtrv-( )`** commands to determine the existing options.

   Activate optional features that you require at this time. **DLP-512**

---

9. After each shelf in the network has been tested, the DDM-2000 FiberReach will be ready for end-to-end testing [**Acceptance: NTP-004**].

Test (Accept) End-to-End DDM-2000 System (Network) — Wideband Shelf

DO ITEMS BELOW IN ORDER LISTED . . . . FOR DETAILS, GO TO

1. **WARNING:**
Unterminated optical connectors may emit invisible laser radiation. Eye damage may occur if beam is viewed directly or with improper optical instruments. Avoid direct exposure to the beam.

CAUTION:
DDM-2000 FiberReach multiplexer circuit packs contain static sensitive components which can be damaged by electrostatic discharge. A static ground wrist strap must be worn when handling the circuit packs. See electrostatic discharge considerations in **Trouble Clearing: TAD-100***.*

NOTE:
This test is to be performed if the DDM-2000 FiberReach multiplexer is being tested or accepted by an organization that did not install it.

NOTE:
It is assumed that the DDM-2000 FiberReach multiplexer is installed and running in an end-to-end network configuration and each shelf has previously been tested in a looped-back configuration.

NOTE:
If the DDM-2000 FiberReach multiplexer fails to respond in the indicated manner, refer the trouble to the organization that installed the multiplexer or use **Trouble Clearing: IXL-001**.

DO ITEMS BELOW IN ORDER LISTED . . . . . FOR DETAILS, GO TO

Determine the optical loss of the optical facility from office records or by making the required measurements.

2. **NOTE:**
   The **`rtrv-map-network`** command may be used to retrieve a map of the network, including the systems in the network and how they are connected.

   Ensure all DDM-2000 FiberReach shelves (**OLIUs**) in the network have been properly connected to the optical facility. Verify the integrity of each optical span. **DLP-514**

3. Use **`rtrv-sync`** command at each DDM-2000 FiberReach node to verify proper timing options. Each DDM-2000 FiberReach node in the network should be set for *`LineTimed`*.

4. **CAUTION:**
   The **`init-sys:all`** *command should NOT be used on an in-service system.*

   NOTE:
   During installation and/or initial testing, provisionable parameters may have been set which need to be reset to default values. VT1.5 (DS1) cross-connections may have been made which should be deleted before the system is placed in service. The **`init-sys:all`** command will reset all provisionable parameters and cross-connections to default values. Some parameters will have to be set again later before service is established.

   NOTE:
   An `inconsistent DCC values` alarm will occur when the init-sys:all command is executed, if the far-end communications has not been enabled at both ends of the system using the **`set-fecom:`** command.

   If required, use the command **`init-sys:all`** to reset provisionable parameters to default values.

DO ITEMS BELOW IN ORDER LISTED	FOR DETAILS, GO TO
5. **NOTE:** The section data communication channel (DCC), used for far- end communications, must be enabled at each network element (shelf) for the end-to-end line test to work. Default condition for the DCC channel is "enabled." If it has been disabled, use the **`set-fecom:`** command **at each shelf** to enable far-end communications. **NOTE:** The **`rlgn`** command can be used to log in to each shelf at optical span being tested. Perform end-to-end OC-1, OC-3, or OC-12 line test on all optical spans. Report any failures to the organization that installed the DDM-2000 FiberReach shelf.	**DLP-515**
6. Perform end-to-end DS1 transmission test in the **mux** direction, if required.	**DLP-510**
7. Perform end-to-end DS3 transmission test in the **mux** direction, if required	**DLP-545**
8. Check local office alarm interface as required.	**DLP-516**
9. Test protection switching function, if required.	**DLP-519**
10. The system is ready for service to be established.	
11. Activate optional features as required.	**DLP-512**

Task Index
System Turnup/Circuit Order

FIND YOUR JOB IN THE LIST BELOW . . . . . THEN GO TO

Equipment Required for Shelf Turnup

1. AT&T PC 6300 compatible personal computer with MS-DOS* Release 2.1 or later. Used for loading software.
2. Proper software release for system configuration you have.
3. **FS1E-E-02** lightguide jumpers for looping shelf **OLIUs**.

Initial Shelf Turnup and Establishing End-to-End System

NOTE:
These procedures are used to equip DDM-2000 FiberReach shelves, establish end-to-end FiberReach/OC-3 or OC-12 networks, and establish initial end-to-end DS1, T1, DS3, HDSL, and/or OC-3c service after all necessary bay, shelf, and cable installation has been done.

Low-Speed Protection Mode — Install/Change

Install DS1 Protection Bus Module (1X1 or 1X7)
System Out-of-Service . . . . . Circuit Order: NTP-011

Change DS1 Protection Bus Module (1X1 or 1X7)
Low-Speed Slots Out-of-Service . . . . . Circuit Order: NTP-012

Shelf — Equipping (Looped Back)

Equip DDM-2000 FiberReach Wideband Shelf
(Looped Back) . . . . . System Turnup: NTP-007

* Registered trademark of Microsoft Corporation

System — Establish End-to-End

Establish OC-1 Single-Homed FiberReach Access
via DDM-2000 OC-3 or OC-12 Backbone Ring . . . . . System Turnup: NTP-008

Establish OC-1 Dual-Homed FiberReach Access
via DDM-2000 OC-3 or OC-12 Backbone Ring . . . . . System Turnup: NTP-009

Establish OC-1 Stand-Alone FiberReach Access
via DDM-2000 OC-3 Host Shelf . . . . . System Turnup: NTP-010

Establish DDM-2000 OC-3c (STS3c) Service . . . . . System Turnup: NTP-016

Establish Single-Homed FiberReach OC-3
Access via DDM-2000 OC-12 Backbone Ring . . . . . System Turnup: NTP-020

Establish Single-Homed FiberReach OC-3 or OC-12
Access via FT-2000 OC-48 Backbone Ring . . . . . System Turnup: NTP-021

Establish Dual-Homed FiberReach OC-3 or OC-12
Access via FT-2000 OC-48 Backbone Ring . . . . . System Turnup: NTP-022

Establish Dual-Homed FiberReach OC-3
Access via DDM-2000 OC-12 Backbone Ring . . . . . System Turnup: NTP-023

Establish FiberReach OC-3 Release 4
Linear Extension via DDM-2000 OC-3
Release 15 Backbone Ring . . . . . System Turnup: NTP-030

Establish FiberReach OC-3 Release 4
Linear Extension via DDM-2000 OC-12
Backbone Ring. . . . . System Turnup: NTP-031

Establish FiberReach OC-3 or OC-12 Release 4
Linear Extension via FT-2000 OC-48
Backbone Ring. . . . . System Turnup: NTP-032

Establish FiberReach OC-3 or OC-12 Release 4
Linear Extension via WaveStar TDM 2.5G OC-48
or 10G OC-192 Backbone Ring. . . . . System Turnup: NTP-034

Establish FiberReach Single-Homed Release 4 OC-3
or OC-12 Access via WaveStar TDM 2.5G OC-48
or 10G OC-192 Backbone Ring. . . . . System Turnup: NTP-035

Establish FiberReach Dual-Homed Release 4 OC-3
or OC-12 Access via WaveStar TDM 2.5G OC-48
or 10G OC-192 Backbone Ring. . . . . System Turnup: NTP-036

Service — Establish Initial DS1/T1/HDSL

Establish Initial End-to-End DS1 Service
(Group Equipped But Not in Service) . . . . . System Turnup: NTP-004

Establish Initial End-to-End T1 Service
(Low-Speed Slot Equipped But Not in Service) . . . . . System Turnup: NTP-013

Establish Initial HDSL Service
(Group Equipped But Not in Service . . . . . System Turnup: NTP-017

Service — Establish OC-3c (STS-3c)

Establish DDM-2000 OC-3c (STS-3c) Service. . . . . System Turnup: NTP-016

Service — Establish Initial DS3

Establish Initial End-to-End DS3 Service
(Group Equipped But Not in Service) . . . . . System Turnup: NTP-025

Shelf/Span — Adding New

Add DDM-2000 FiberReach Node to a
Dual Homed OC-1/OC-3/OC-12 Ring Off
an OC-3/OC-12/OC-48/OC-192 Ring . . . . . Circuit Order: NTP-002

Add DDM-2000 FiberReach OC-3 or OC-12 Node
To an OC-3 or OC-12 Ring . . . . . Circuit Order: NTP-024

Service — Adding New DS1/T1/HDSL

Add New DS1 Service . . . . . Circuit Order: NTP-006

Add New T1 Service. . . . . Circuit Order: NTP-014

Add New HDSL Service

(Group Already in Service) . . . . . Circuit Order: NTP-018

Service — Discontinue DS1/T1/HDSL

Discontinue End-to-End DS1 Service . . . . . Circuit Order: NTP-005

Discontinue End-to-End T1 Service . . . . . Circuit Order: NTP-015

Discontinue End-to-End HDSL Service . . . . . Circuit Order: NTP-019

Service — Discontinue DS3

Discontinue End-to-End DS3 Service . . . . . Circuit Order: NTP-026

Shelf (Node) — Discontinue

Discontinue DDM-2000 FiberReach Node (Shelf)
From Path Switched Ring Network . . . . . Circuit Order: NTP-003

Upgrades

Upgrade DDM-2000 OC-3 Ring Network With
FiberReach OC-3 Shelves to OC-12 Ring Network
In Service. . . . . Circuit Order: NTP-033

Add New DDM-2000 FiberReach Node to a Dual Homed OC-1/OC-3/OC-12 Ring Off an OC-3/OC-12/OC-48/OC-192 Ring

DO ITEMS BELOW IN ORDER LISTED . . . . FOR DETAILS, GO TO

1. **CAUTION:**
DDM-2000 circuit packs contain static sensitive components which can be damaged by electrostatic discharge. A static ground wrist strap must be worn when handling the circuit packs. See electrostatic discharge considerations in **Trouble Clearing: TAD-100**.

NOTE:
This procedure assumes that the DDM-2000 is in service and a new RT site (shelf) is being added to the Path Switched Ring configuration (see Figure 1).

NOTE:
It is assumed that optical loops are installed on the new shelf, that the new shelf has been tested in a looped-back configuration, and that the proper release of software has been loaded [**System Turnup: NTP-007**].

NOTE:
FiberReach nodes operating at an OC-1 rate require two **26-Type OLIU**s in the **MAIN** slots of the FiberReach shelf.

NOTE:
FiberReach nodes operating at an OC-3 rate require two **28-Type OLIU**s in the **MAIN** slots of the FiberReach shelf.

NOTE:
FiberReach nodes operating at an OC-12 rate require two **29-Type OLIU**s in the **MAIN** slots of the FiberReach shelf.

NOTE:
The **28-Type** and **29-Type OLIU**s require a faceplate interconnect cable assembly, [comcode 847721271].

DO ITEMS BELOW IN ORDER LISTED . . . . FOR DETAILS, GO TO

NOTE:
All shelves in the same network must have the same or compatible software releases.

NOTE:
This procedure requires information from other sites in the network, either through remote modem connection or by having a technician at the neighboring site.

NOTE:
If the DDM-2000 fails to respond in the indicated manner, refer to **Trouble Clearing: IXL-001**.

Use the **`rtrv-alm:`** command to verify that no alarms, locks, loops, or switches are present.

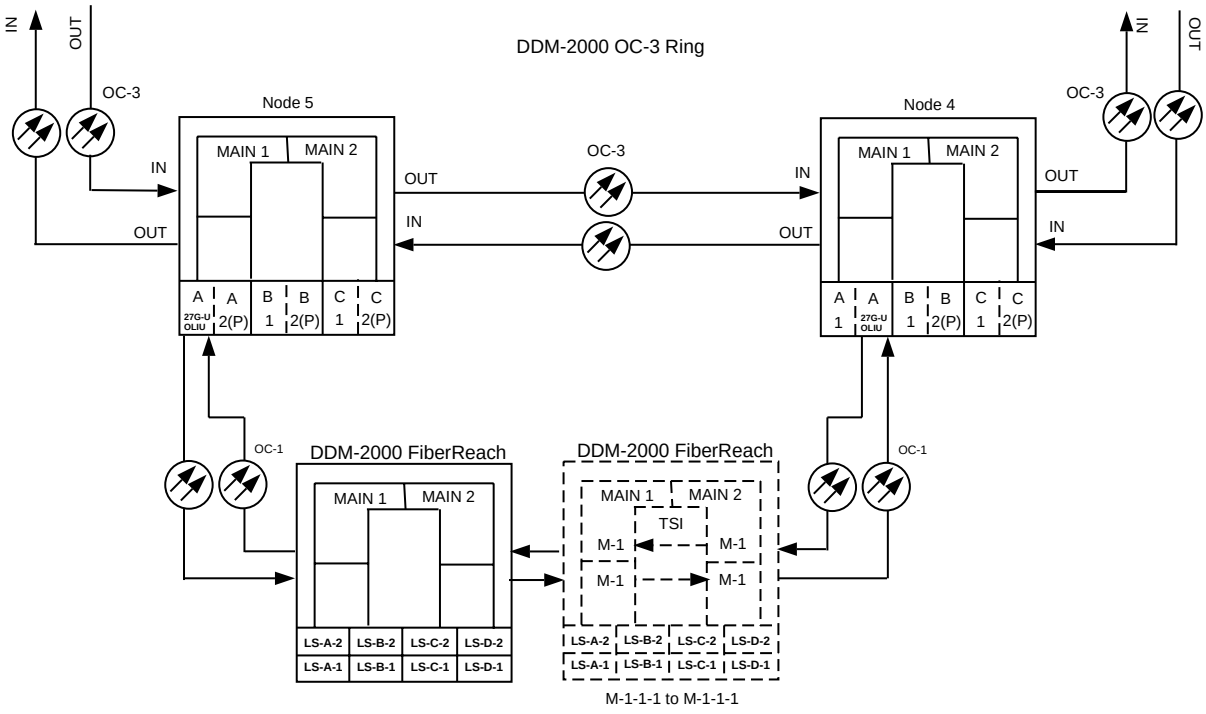

Figure 1 – Adding an RT (Node) to an Existing Ring Network

DO ITEMS BELOW IN ORDER LISTED . . . . FOR DETAILS, GO TO

2. Notify maintenance center that alarms will be generated.

3. Use the **`set-fecom:`** command to set the User Side/Network Side parameters.

4. **NOTE:**
   It may be helpful to make a sketch of the network to visualize the cross-connections required.

   Use **`rtrv-map-network:`** and **`rtrv-map-neighbor:`** commands to determine systems (sites) in the network and how they are connected to each other.

5. From office records or by using the **`rtrv-crs-vt1:all`** command at any site, determine the existing cross-connections.

6. **CAUTION:**
   Critical or Major alarms will be generated if pass-through cross-connections are not made on the new shelf before splicing it into the network.

   NOTE:
   In ring configurations, you should use the following rules in establishing cross-connections in each ring:

   1. All drop connections (including DRI, if present) from the same STS-1 timeslot must be provisioned the same, either all VT1.5 or STS-1.
   2. If all 28 VT1.5s (DS1s) in an STS-1 are being passed through at a node in a VT1.5 path-switched ring, then the cross-connection may be provisioned as either a pass-through STS-1 or VT1.5. However, if you anticipate dropping VT1.5s from the pass-through node in the future, you should provision the pass-throughs as VT1.5 cross-connections.
   3. On STS-1 path-switched rings, all nodes in the ring must be provisioned as STS-1 cross-connections.

DO ITEMS BELOW IN ORDER LISTED . . . . . FOR DETAILS, GO TO

NOTE:
Up to 28 DS1s may be terminated in an OC-1 ring network. Once a DS1 is terminated, that timeslot must be reserved in both directions around the ring to the far end. Therefore, if a DS1 is terminated (cross-connected) on a near-end and far-end terminating shelf, it must also be pass-through cross-connected in every shelf in the network. (See "Cross-Connection Provisioning" in the "Administration and Provisioning" section of this manual for more information on cross connections.)

Use the **`ent-crs-vt1:`** command at the new shelf to make all required *pass-through* cross-connections (for example, **`ent-crs-vt1:m-1-1-1,m-1-1-1`**). Pass-through cross-connections must be made at the new shelf to correspond to each terminating cross-connection present on every shelf in the ring network (see Figure 1).

---

7. **WARNING:**
Unterminated optical connectors may emit invisible laser radiation. Eye damage may occur if beam is viewed directly or with improper optical instruments. Avoid direct exposure to the beam.

CAUTION:
An automatic protection switch service hit may occur when the correct optical fibers are cut. Cutting the wrong fiber lines will cause a service interruption.

At the point where the new DDM-2000 FiberReach shelf will be added, use local procedures to cut the two fiber lines connecting existing shelves and condition the fiber for connection to the new shelf.

---

8. **NOTE:**
Cutting the main sync source will cause the line-timed node to go into *holdover*.

Verify that only `minor nsa OC-1/OC-3/OC-12 LOS` and `nsa inc. VT/STS1 AIS` alarms are present at each end of the fiber cut.

DO ITEMS BELOW IN ORDER LISTED	FOR DETAILS, GO TO
9. At new shelf, remove **OLIU** optical loops.	
10. Determine the optical loss of the optical facility from office records or by making the required measurements.	
11. Connect one pair of optical fibers from an adjacent shelf (site) to new shelf **MAIN-1 OLIU**. Ensure that the correct fibers are connected to the proper **OLIU** (**MAIN-2** in one node to **MAIN-1** in an adjacent node[new shelf].)	**DLP-514**
12. **NOTE:** If the report in this step indicates wrong fiber connections or no connection, verify that *fecom* is ON (**`rtrv-fecom:`**) and check fiber integrity. Use **`rtrv-map-neighbor:`** command to verify proper fiber connections have been made to the adjacent node.	
13. Connect optical fibers from the other adjacent shelf (site) to new shelf **MAIN-2 OLIU**. Ensure that the correct fibers are connected to the proper **OLIU** (**MAIN-2** in one node[new shelf] to **FN-( )-2(P)**, **LS INTFC ( )**, or **PORT ( ) OUT/IN** in an adjacent node.)	**DLP-514**
14. **NOTE:** If the report in this step indicates wrong fiber connections or no connection, verify that *fecom* is ON (**`rtrv-fecom:`**) and check fiber integrity. Use **`rtrv-map-neighbor:`** command to verify proper fiber connections have been made to the adjacent node.	
15. Verify that all alarm and status conditions clear. If `nsa inc. VT AIS` alarm is present and no `inc. OC-1/OC-3/OC-12 LOS` alarm, check that all pass-through cross-connections have been properly made using the **`rtrv-crs-vt1:`** command. If `nsa inc. STS AIS` alarm is present and no `inc. OC-1/OC-3/OC-12 LOS` alarm, check that all pass-through cross-connections have been properly made using the **`rtrv-crs-sts1:`** command.	

DO ITEMS BELOW IN ORDER LISTED. . . . .FOR DETAILS, GO TO

16. **NOTE:**
The **`rtrv-sync:`** command retrieves the `Synchronization Report`. This report displays the provisioning and operational information on the synchronization attributes of the DDM-2000. See the "Commands and Reports" section of this manual for a description of the **`rtrv-sync:`** command format.

Use the **`rtrv-sync:`** command to obtain the `Synchronization Report` and verify if Sync Autoreconfiguration is enabled. Use the **`set-sync:`** command to enable the Sync Autoreconfiguration parameter, if required.

---

17. Use the **`rtrv-ne:`** command at each site to verify no duplicate TID settings exist. If duplicates exist, determine new settings and use the **`set-ne:`** command to make new settings.

---

18. **NOTE:**
FT-2000 OC-48 with Releases 8.1 through 9.1, DDM-2000 OC-3/OC-12 shelves with Release 15 and FiberReach OC-1/OC-3/OC-12 shelves with Release 4 software support AGNE(s) and alarm groups. WaveStar TDM 2.5G OC-48 and 10G OC-192, DDM-2000 OC-12 shelves with Release 7 or 13 and FiberReach OC-3 shelves with Release 3 software do **not** support these features and will **not** appear in the alarm groups of a network with mixed software.

NOTE:
The Remote NE Status (**`rnestat`**) parameter of the **`set-ne:`** command must be enabled prior to designating the AGNE(s) and alarm group numbers.

DO ITEMS BELOW IN ORDER LISTED . . . . FOR DETAILS, GO TO

NOTE:
Shelves may be designated as an alarm gateway network element (AGNE) and assigned an alarm group number. (Default alarm group number is 255.) At least one AGNE is required per alarm group. One primary AGNE and one backup per alarm group is recommmended. For a network greater than 16 nodes, the AGNE and TL1 GNE should be on separate nodes. The AGNE parameter of the **`set-ne:`** command may have been set to yes on each new shelf during shelf turnup procedures to suppress an `AGNE communication failure` alarm.

Use the **`set-ne:`** command to designate the AGNE(s) and alarm group numbers, as required.

---

19. **NOTE:**
Shelves that are part of a subnetwork being partitioned into multiple sreas require that the NSAP*AREA* field and level 2 IS-IS routing parameters of the **`ent-ulsdcc-l3`** command be set. See Section 11 “Commands and Reports” in 363-206-285, *DDM-2000 OC-3 Multiplexer, TARP Release 13 and Later, User/Service Manual - Volume I* and this manual, for an explanation of the command parameters and 824-102-144, *Lucent Technologies 2000 Product Family, Operations Interworking Guide for TARP Releases*, for an explanation of the engineering rules for subnetworking partitioning.

Use the **`ent-ulsdcc-l3`** command to designate the NSAP*AREA* field and level 2 IS-IS routing, as required.

---

20. Perform end-to-end OC-1/OC-3/OC-12 optical line test on optical spans being established. **DLP-515**

DO ITEMS BELOW IN ORDER LISTED . . . . . FOR DETAILS, GO TO

21. **NOTE:**
Proper cross-connections must be made at each shelf to establish the complete end-to-end path for the DS1/DS3 port being tested. After one path (ring1 or ring2) has been tested, use the **`sw-path-vt1/sts1:`** command at both ends to test the other ring path.

Perform end-to-end single ring DS1/DS3 transmission test for the circuits being added, as required.

A.	Single Ring DS1 Test	**DLP-510**
B.	Single Ring DS3 Test	**DLP-511**

22. The system is ready for service to be established.
Initial DS1 Service [**System Turnup: NTP-004**]
Initial T1 Service [**System Turnup: NTP-013**]
Initial HDSL Service [**System Turnup: NTP-017**]
Initial DS3 Service [**System Turnup: NTP-025**]
STS-3c Service [**System Turnup: NTP-016**]

Discontinue DDM-2000 FiberReach Node (Shelf) From Path Switched Ring Network

DO ITEMS BELOW IN ORDER LISTED . . . . FOR DETAILS, GO TO

1. **CAUTION:**
   DDM-2000 circuit packs contain static sensitive components which can be damaged by electrostatic discharge. A static ground wrist strap must be worn when handling the circuit packs. See electrostatic discharge considerations in **Trouble Clearing: TAD-100**.

   NOTE:
   The craft interface terminal (CIT) or **`rtrv-map-network:`** and **`rtrv-map-neighbor:`** commands may be used to retrieve a map of the SONET network, including a list of the systems in the network and how they are connected. The **`rtrv-crs-vt1:`** or **`rtrv-crs-sts1:`** command may be used to retrieve VT1.5 (DS1) or STS-1 (DS3) cross-connections within the DDM-2000 system.

   Use **`rtrv-alm:`** command to verify no alarms, locks, loops, or switches are present.

2. Determine which DDM-2000 node (shelf) is being discontinued.

3. Verify that optical line loss budget will not be exceeded by removing this node.

DO ITEMS BELOW IN ORDER LISTED . . . . . FOR DETAILS, GO TO

4. At the shelf being discontinued and all associated terminating shelves, ensure service (signals) has been removed from the service being discontinued.

   Discontinue DS1 Service [**Circuit Order: NTP-005**]

   Discontinue T1 Service [**Circuit Order: NTP-015**]

   Discontinue HDSL Service [**Circuit Order: NTP-019**]

   Discontinue DS3 Service [**Circuit Order: NTP-025**]

5. **CAUTION:**
   Removal of wrong fiber connections will result in a service interruption. Ensure you remove only the fiber connections for the optical span being discontinued.

   NOTE:
   The following operations will activate office alarms. The audible alarm may be suppressed by depressing the **ACO** button.

   Remove optical fiber connections from **MAIN OLIUs** in node (shelf) being discontinued.

6. Reconnect the optical fibers, bypassing the node just removed. Ensure all alarms in the ring configuration are off. If alarms are present, verify fiber connections and integrity.

7. If the removed shelf is not to be left powered, power down the shelf per local procedures then proceed to Step 10. Otherwise, continue with Step 8.

8. If **OLIU** circuit packs are not removed, connect optical fiber loops to **OLIUs**. **DLP-505**

DO ITEMS BELOW IN ORDER LISTED . . . . FOR DETAILS, GO TO

9. **NOTE:**
   The **UPD/INIT** pushbutton on the **SYSCTL** is recessed to prevent its accidental operation. You will need a small pointed object, such as a ball-point pen to operate it.

   If any circuit packs were removed, momentarily depress the **UPD/INIT** button on the **SYSCTL** or use the **upd** command to update the DDM-2000 internal equipment list.

10. Verify that all alarms go off.

Establish Initial End-to-End DS1 Service (Group Equipped but Not In Service)

DO ITEMS BELOW IN ORDER LISTED . . . . FOR DETAILS, GO TO

1. **CAUTION:**
DDM-2000 circuit packs contain static sensitive components which can be damaged by electrostatic discharge. A static ground wrist strap must be worn when handling the circuit packs. See electrostatic discharge considerations in **Trouble Clearing: TAD-100**.

NOTE:
The FiberReach and host system must be established before continuing with this procedure. If all the nodes of the network have not been equipped and installed, refer to **System Turnup/Circuit Order: IXL-001** for procedures to equip the DDM-2000 shelves and establish the system.

NOTE:
This procedure assumes that **DS1/DS1PM** circuit packs have already been installed during initial shelf turnup and circuit packs have been installed during initial shelf turnup at the other DS1 terminating end(s) of the circuit. If the terminating end is in another system, it is assumed that the appropriate installation and connections have been made to that system. If the appropriate circuit packs have not been installed and the system is in service on other groups, refer to **System Turnup/Circuit Order: IXL-001** for procedures to add a new group for DS1 service.

NOTE:
If the DDM-2000 fails to respond in the indicated manner, refer to **Trouble Clearing: IXL-001**.

Verify that no LEDs or alarms are activated. If any LEDs or alarms are activated, refer to **Trouble Clearing: IXL-001** and follow the appropriate trouble-clearing procedure.

DO ITEMS BELOW IN ORDER LISTED . . . . . FOR DETAILS, GO TO

2. **NOTE:**
   The **`rtrv-eqpt:`** command retrieves the `Equipage and Version Report`. This report lists the circuit pack type and version information for one or more slots. See the "Commands and Reports" section of this manual for a description of the **`rtrv-eqpt:`** command format.

   At each FiberReach terminating end, use the **`rtrv-eqpt:`** command to obtain the `Equipage and Version Report` and verify that the proper service and protection (if required) **DS1/DS1PM** circuit packs have been installed in LOW-SPEED group(s) being put into service.

3. At the DS1 terminating node(s) of the circuit being established, determine which DS1 port(s) is to be put into service and what options are to be selected.

4. **NOTE:**
   The **`rtrv-t1:`** command retrieves the `T1 Port Provisioning Report`. This report lists information about each DS1 port. This information includes attributes set by the **`set-t1:`** command. See the "Commands and Reports" section of this manual for a description of the **`rtrv-t1:`** command format.

   At each DS1 terminating node, use the **`rtrv-t1:`** command to obtain the `T1 Port Provisioning Report` and verify the hardware and software option settings.

DO ITEMS BELOW IN ORDER LISTED . . . . FOR DETAILS, GO TO

5. **NOTE:**
Standard DS1 transmitter sources are designed to terminate in a nominal 100-ohm impedance. This termination is usually provided by the receiving equipment. When not connected to receiving equipment (that is, idle or unterminated), DS1 transmitter equipment should terminate in a 100-ohm load. When connecting through DSX equipment, this can be accomplished with terminating plugs available from the DSX manufacturer. Any alternative method may be used resulting in 100-ohms across the TIP and RING of the DS1 circuit output while in an idle state. Failure to terminate DS1 outputs may result in violation of FCC Part 15 emission requirements and possibly interfere with other electronic equipment. Also, AIS should be turned off (using the **`set-t1:address:ais=no`** command) on any DS1 circuit that is not in service.

NOTE:
For the 1X1 protection configuration, circuit packs are protected on a one-to-one basis. For example, if protection is required for a DS1 circuit pack in a service **LS-**[**A-1, B-1, C-1,** or **D-1**] slot, a **DS1** circuit pack must be installed in the protection **LS-**[**A-2, B-2, C-2,** or **D-2**] slot. If **BBF3 DS1PM** circuit packs are installed in service slots, then a **BBF3 DS1PM** circuit pack must be installed in the protection slot if protection is required.

NOTE:
For the 1X7 protection configuration, the circuit pack type installed in the **LS-D-2** slot is the only circuit pack type that is protected. In a 1X7 protection configuration, **177A** Apparatus Blank cards are required in unequipped LOW-SPEED slots.

At each DS1 terminating node, set option switches and install **DS1/DS1PM** circuit pack(s), as required. **DLP-508**

DO ITEMS BELOW IN ORDER LISTED . . . . . FOR DETAILS, GO TO

6. At each DS1 terminating node, use the **`set-t1:`** command to set the characteristics of the DS1 port of the circuit being established.

7. At each DS1 terminating node, make the appropriate cable connection(s) to the DS1 cross-connect point(s) or equivalent connection point(s) for the circuit being added.

8. Verify that no LEDs or alarms are activated. If any LEDs or alarms are activated, refer to **Trouble Clearing: IXL-001** and follow the appropriate trouble-clearing procedure.

9. **NOTE:**
   DS1 cross-connections have to be made at each shelf to configure the transmission path for each DS1 circuit being established. Either terminating (drop) cross-connections are made at terminating nodes and pass-through cross-connections are made at intermediate nodes.

   NOTE:
   The following commands may be used to delete, enter, and retrieve cross-connections: **`dlt-crs-vt1`**, **`ent-crs-vt1`**, and **`rtrv-crs-vt1`**. See the "Commands and Reports" section of this manual for a description of commands. See "Cross-Connection Provisioning" in the "Administration and Provisioning" section of this manual for more information on cross-connection provisioning.

   Determine the necessary cross-connections for each node from the work order or circuit order.

DO ITEMS BELOW IN ORDER LISTED . . . . FOR DETAILS, GO TO

10. Make necessary VT1.5/STS1 cross-connections at each node in the network.

    A. Single/Dual Homed OC-3 or OC-12/OC-1 Configuration **DLP-526**

    B. Single/Dual Homed OC- 12/OC-3 Configuration **DLP-535**

    C. Single/Dual Homed OC- 48 or OC-192/OC-3 or OC-12 Configuration **DLP-530**

    D. Stand Alone OC-3/OC-1 Ring Configuration **DLP-528**

11. **NOTE:**
    For a DS1 circuit in a path protected ring network, the **`sw-path-( ):address`** command must be used at the terminating nodes to switch the active VT1.5 (DS1) path to repeat this test on the other path(s).

    Perform DS1 end-to-end transmission test for each circuit being put into service, as required. **DLP-510**

12. Use the **`rtrv-state:`** command to determine the port state of the DS1 port(s) of the circuit being established.

13. **NOTE:**
    If a port is in the *nmon (n)* state, the signal is not monitored or alarmed. The port will not automatically go to the *in service (i)* state when a signal is detected as it will in the *auto (a)* state. In the *nmon* state, the port must be returned to the *auto* state, using the **`set-state-t1:`** command, to turn on monitoring of signal failures and before any circuit packs associated with that port can be removed from the equipment list by the **upd** command.

    Use the **`set-state-t1:`** command to set the port state of the DS1 port(s) of the circuit being established.

14. If **BBF3 DS1PM** circuit packs are installed and the optional *ds1pm* performance monitoring feature is to be used, use the **`set-feat:feat=ds1pm,act=enable`** command to enable the feature.

Discontinue End-to-End DS1 Service

DO ITEMS BELOW IN ORDER LISTED . . . . FOR DETAILS, GO TO

1. **CAUTION:**
   DDM-2000 circuit packs contain static sensitive components which can be damaged by electrostatic discharge. A static ground wrist strap must be worn when handling the circuit packs. See electrostatic discharge considerations in **Trouble Clearing: TAD-100**.

   NOTE:
   Standard DS1 transmitter sources are designed to terminate in a nominal 100-ohm impedance. This termination is usually provided by the receiving equipment. When not connected to receiving equipment (that is, idle or unterminated), DS1 transmitter equipment should terminate in a 100-ohm load. When connecting through DSX equipment, this can be accomplished with terminating plugs available from the DSX manufacturer. Any alternative method may be used resulting in 100-ohms across the TIP and RING of the DS1 circuit output while in an idle state. Failure to terminate DS1 outputs may result in violation of FCC Part 15 emission requirements and possibly interfere with other electronic equipment. Also, AIS should be turned off (using the **`set-t1:`***address***`:ais=no`** command) on any DS1 circuit that is not in service.

   Determine which DS1 ports are to be discontinued and verify no alarms exist on the system.

2. Notify maintenance center that alarms will be generated while performing this procedure.

DO ITEMS BELOW IN ORDER LISTED . . . . . FOR DETAILS, GO TO

3. **NOTE:**
   The following operation may activate the office major, minor, or no alarm. The audible alarm may be suppressed by depressing the **ACO** button.

   NOTE:
   One of the terminating nodes for the DS1 service may be equipped with **STS1E** circuit packs to provide an EC-1 interface for the DS1 service.

   At the DSX-1 at the DS1 terminating nodes, remove the DS1 signals associated with the port(s) being discontinued. (**FAULT** LEDs begin flashing on **DS1/DS1PM** circuit pack with signals removed.)

4. **NOTE:**
   The **UPD/INIT** pushbutton on the **SYSCTL** is recessed to prevent its accidental operation. You will need a small pointed object such as a ball-point pen to operate it.

   Momentarily depress the **UPD/INIT** button on the **SYSCTL** at the DS1 terminating nodes or use the **`upd`** command to update the equipment list. (Flashing **FAULT** LEDs go off.)

5. Use the **`rtrv-state-eqpt:`** command to verify that the correct port(s) has been changed from *in-service* (i) to *auto* (a) state.

6. **CAUTION:**
   Removing the wrong cross-connections may cause service interruption.

   From work order or **`rtrv-crs-()`** command, determine the cross-connections for circuit being discontinued.

DO ITEMS BELOW IN ORDER LISTED . . . . FOR DETAILS, GO TO

7. **NOTE:**
DS1 LOW-SPEED slots cannot be unequipped without an alarm until all port cross-connections are removed. The cross-connections must be removed first before removing circuit packs. In a ring configuration, remove the cross-connections from the terminating nodes first, then remove the pass-through cross-connections at the intermediate nodes. A Major alarm may occur when the first cross-connection at the terminating node is deleted and clear when the other terminating cross-connection is deleted.

NOTE:
The following commands may be used to delete, enter, and retrieve cross-connections at the FiberReach shelf: **`dlt-crs-vt1`**, **`ent-crs-vt1`**, and **`rtrv-crs-vt1`**. See the "Commands and Reports" section of this manual for a description of commands. See "Cross-Connection Provisioning" in the "Administration and Provisioning" section of this manual for more information on cross-connections.

Use the **`dlt-crs-vt1:`** command to delete the terminating (drop) node cross-connections for all DS1 service being removed, if required.

---

8. **NOTE:**
If other nodes in the DS1 path being discontinued are not DDM-2000 FiberReach nodes, use the documentation for the other systems to delete the necessary cross-connections, if required.

Use the **`dlt-crs-vt1:`** command to delete the pass-through cross-connections at each nonterminating node for all DS1 service being removed, if required.

DO ITEMS BELOW IN ORDER LISTED . . . . . FOR DETAILS, GO TO

9. **NOTE:**
   If a port is in the *nmon (n)* state, the signal is not monitored or alarmed. The port will not automatically go to the *in service (i)* state when a signal is detected as it will in the *auto (a)* state. In the *nmon* state, the port must be returned to the *auto* state, using the **`set-state-t1:`** command, to turn on monitoring of signal failures and before any circuit packs associated with that port can be removed from the equipment list by the `upd` command.

   If circuit packs are going to be removed, use the **`rtrv-state-t1:`**/**`set-state-t1:`** command to verify/set the port state of the DS1 ports to auto.

   If circuit packs are **not** going to be removed, use the **`set-state-t1:`** command to set the port state of the DS1 port(s) to *auto* or *nmon*, as required.

10. If all four DS1 ports on the **DS1/DS1PM** circuit pack are being discontinued, you may remove the **DS1/DS1PM** circuit pack, if required.

11. If circuit packs have been removed, momentarily depress the **UPD/INIT** button on the **SYSCTL** or use the `upd` command to update the DDM-2000 internal equipment list.

12. If the FiberReach shelf is equipped for 1X7 protection mode and circuit packs have been removed, install **177A** Apparatus Blank cards into empty low-speed slots.

13. Verify all alarms are off.

Add New DS1 Service

DO ITEMS BELOW IN ORDER LISTED . . . . FOR DETAILS, GO TO

1. **CAUTION:**
DDM-2000 FiberReach circuit packs contain static sensitive components which can be damaged by electrostatic discharge. A static ground wrist strap must be worn when handling the circuit packs. See electrostatic discharge considerations in **Trouble Clearing: TAD-100.**

NOTE:
This procedure assumes that a new DS1 port or **DS1/DS1PM** circuit pack is being added to a DDM-2000 FiberReach shelf that is already in service. It also assumes that **STS1E** circuit packs have been installed if the other end is an EC-1 interface.

NOTE:
For the 1X1 protection configuration, circuit packs are protected on a one-to-one basis. For example, if protection is required for a DS1 circuit pack in a service **LS-**[**A-1**, **B-1**, **C-1**, or **D-1**] slot, a **DS1** circuit pack must be installed in the protection **LS-**[**A-2**, **B-2**, **C-2**, or **D-2**] slot. If **BBF3 DS1PM** circuit packs are installed in service slots, then a **BBF3 DS1PM** circuit pack must be installed in the protection slot if protection is required.

NOTE:
For the 1X7 protection configuration, the circuit pack type installed in the **LS-D-2** slot is the only circuit pack type that is protected. In a 1X7 protection configuration, **177A** Apparatus Blank cards are required in unequipped LOW-SPEED slots.

DO ITEMS BELOW IN ORDER LISTED . . . . . FOR DETAILS, GO TO

NOTE:
Standard DS1 transmitter sources are designed to terminate in a nominal 100-ohm impedance. This termination is usually provided by the receiving equipment. When not connected to receiving equipment (that is, idle or unterminated), DS1 transmitter equipment should terminate in a 100-ohm load. When connecting through DSX equipment, this can be accomplished with terminating plugs available from the DSX manufacturer. Any alternative method may be used resulting in 100-ohms across the TIP and RING of the DS1 circuit output while in an idle state. Failure to terminate DS1 outputs may result in violation of FCC Part 15 emission requirements and possibly interfere with other electronic equipment. Also, AIS should be turned off (using the **`set-t1:`***address***`:ais=no`** command) on any DS1 circuit that is not in service.

NOTE:
If the DDM-2000 FiberReach fails to respond in the indicated manner, refer to **Trouble Clearing: IXL-001**.

Determine which DS1 ports/slots are to be put into service and what options are to be selected.

2. Verify that no LEDs or alarms are activated. If any LEDs or alarms are activated, refer to **Trouble Clearing: IXL-001** and follow the appropriate trouble-clearing procedure.

DO ITEMS BELOW IN ORDER LISTED . . . . FOR DETAILS, GO TO

3. ⚠ **CAUTION:**
To minimize "hits" on in-service ports on **DS1/DS1PM** *circuit packs having a port added, it is recommended that a CIT be used to manually switch (using the* **`switch-ls`** *command) the DS1 to protection if the* **DS1/DS1PM** *circuit pack is removed or to set channel options without removing the circuit pack.*

⚠ **CAUTION:**
If the protection **DS1/DS1PM** *circuit pack is not available for a protection switch, removing a service* **DS1/DS1PM** *circuit pack will interrupt service on all ports on that circuit pack. If a CIT is available, use the* **`rtrv-state`** *command to check the status of the protection switch.*

Condition **DS1/DS1PM** circuit pack or port for new DS1 service being added. **DLP-520**

4. At each DS1 terminating node, use the **`set-t1:`** command to set the characteristics of the DS1 port being established, if not already performed.

5. At each DS1 terminating node, make the appropriate cable connection(s) to the DS1 cross-connect point(s) or equivalent connection point(s) for the circuit(s) being added.

6. Verify that no LEDs or alarms are activated. If any LEDs or alarms are activated, refer to **Trouble Clearing: IXL-001** and follow the appropriate trouble-clearing procedure.

DO ITEMS BELOW IN ORDER LISTED . . . . . FOR DETAILS, GO TO

7. **NOTE:**
   To configure the transmission path for each DS1 circuit being established, terminating (drop) cross-connections or "drop and continue" cross-connections must be made at terminating nodes and pass-through cross-connections made at intermediate nodes.

   NOTE:
   In ring configurations, you should use the following rules in establishing cross-connections in each ring:

   1. All drop connections (including DRI, if present) from the same STS-1 timeslot must be provisioned the same, either all VT1.5 or STS-1.
   2. If all 28 VT1.5s (DS1s) in an STS-1 are being passed through at a node in a VT1.5 path-switched ring, then the cross-connection may be provisioned as either a pass-through STS-1 or VT1.5. However, if you anticipate dropping VT1.5s from the pass-through node in the future, you should provision the pass-throughs as VT1.5 cross-connections.
   3. On STS-1 path-switched rings, all nodes in the ring must be provisioned as STS-1 cross-connections.

   NOTE:
   The following commands may be used to convert, delete, enter, and retrieve cross-connections: **`dlt-crs-sts1`**, **`dlt-crs-vt1`**, **`ent-crs-sts1`**, **`ent-crs-vt1`**, **`rtrv-crs- sts1`**, and **`rtrv-crs-vt1`**. See the "Commands and Reports" section of this manual for a description of commands. See "Cross-Connection Provisioning" in the "Administration and Provisioning" section of this manual for more information on cross-connection provisioning.

   Determine the necessary cross-connections for each node from the work order or circuit order.

DO ITEMS BELOW IN ORDER LISTED . . . . FOR DETAILS, GO TO

8. Make necessary VT1.5/STS1 cross-connections for each node in the network.

   A. Single/Dual Homed OC-3/OC-1 Configuration **DLP-526**

   B. Single/Dual Homed OC-12/OC-3 Configuration **DLP-535**

   C. Single/Dual Homed OC-48/OC-3 or OC-12 Configuration **DLP-530**

   D. Stand Alone OC-3/OC-1 Ring Configuration **DLP-528**

9. For a DS1 circuit in a path protected ring network, the **`sw-path-( ):`***address* command must be used at the terminating nodes to switch the active VT1.5 (DS1) path to repeat this test on the other path(s).

   Perform DS1 end-to-end transmission test for each circuit being put into service. **DLP-510**

10. Use the **`rtrv-state:`** command to determine the port state of the DS1 port(s) of the circuit being established.

11. **NOTE:**
    If a port is in the *nmon (n)* state, the signal is not monitored or alarmed. The port will not automatically go to the *in service (i)* state when a signal is detected as it will in the *auto (a)* state. In the *nmon* state, the port must be returned to the *auto* state, using the **`set-state-t1:`** command, to turn on monitoring of signal failures and before any circuit packs associated with that port can be removed from the equipment list by the `upd` command.

    Use the **`set-state-t1:`** command to set the port state of the DS1 port(s) of the circuit being established.

12. If **BBF3 DS1PM** circuit packs are installed and the optional *ds1pm* performance monitoring feature is to be used, use the **`set-feat:feat=ds1pm,act=enable`** command to enable the feature.

Equip DDM-2000 FiberReach Wideband Shelf (Looped Back)

DO ITEMS BELOW IN ORDER LISTED . . . . FOR DETAILS, GO TO

1. **WARNING:**
Unterminated optical connectors may emit invisible laser radiation. Avoid direct exposure to the beam. Do not view beam with optical instruments. Use of controls or adjustments or performance of procedures other than those specified herein may result in hazardous radiation exposure.

CAUTION:
DDM-2000 FiberReach circuit packs contain static sensitive components which can be damaged by electrostatic discharge. A static ground wrist strap must be worn when handling the circuit packs. See electrostatic discharge considerations in **Trouble Clearing: TAD-100***.*

NOTE:
This procedure assumes that all hardwired installation and testing of the unequipped DDM-2000 FiberReach shelf has been done. It also assumes that power is applied to the shelf (**PWR ON** LED(s) lit on User Panel).

NOTE:
Some of the circuit packs have option switches which must be set before they are installed.

Verify proper protection bus module (1X1 or 1X7) has been installed and the proper low-speed designation strip label is placed on the middle designation strip located between the low-speed slots on front of shelf. If the shelf has not been equipped for the required low-speed protection mode, refer trouble to the organization that installed the shelf or use procedures of **NTP-011** to install the correct protection mode assembly.

2. Install User Panel and check –48 V DC power, if required. **DLP-524**

DO ITEMS BELOW IN ORDER LISTED . . . . . FOR DETAILS, GO TO

3. **NOTE:**
If system software has not been previously installed in the **SYSCTL**, it must be installed [**DLP-525**] after the **SYSCTL** is installed.

Install **BBG8/BBG8B SYSCTL** circuit pack. **DLP-539**

4. **NOTE:**
As additional circuit packs are installed, office alarms may be activated, accompanied by flashing **FAULT** LEDs on some of the circuit packs. This is a normal condition at this stage of the procedure. You can momentarily depress the **TST** pushbutton to retire office alarms.

Install **OLIU** circuit packs. **DLP-504**

5. **NOTE:**
The **26G-U/26G2-U OLIU** requires a 15 dB LBO for loopback testing. The **29G-U/29H-U OLIU** requires a 10 dB LBO for loopback testing.

NOTE:
If fecom is enabled, an `inconsistent DCC values` alarm will occur when the **OLIUs** are looped back. Normally, the alarm occurs when the network side/user side parameters at both ends of the DCC are set the same. To clear the alarm during a fiber loopback, use the **`set-fecom:`***address***`:com=disable`** command to disable the DCC.

Install **OLIU** optical loops. **DLP-505**

DO ITEMS BELOW IN ORDER LISTED . . . . . FOR DETAILS, GO TO

6. **NOTE:**
Standard DS1 transmitter sources are designed to terminate in a nominal 100-ohm impedance. This termination is usually provided by the receiving equipment. When not connected to receiving equipment (that is, idle or unterminated), DS1 transmitter equipment should terminate in a 100-ohm load. When connecting through DSX equipment, this can be accomplished with terminating plugs available from the DSX manufacturer. Any alternative method may be used resulting in 100-ohms across the TIP and RING of the DS1 circuit output while in an idle state. Failure to terminate DS1 outputs may result in violation of FCC Part 15 emission requirements and possibly interfere with other electronic equipment. Also, AIS should be turned off (using the **`set-t1:`***address***`:ais=no`** command) on any DS1 circuit that is not in service.

NOTE:
For the 1X1 protection configuration, circuit packs are protected on a one-to-one basis. For example, if protection is required for a **DS1** (**T1EXT**) circuit pack in a service **LS-**[**A-1**, **B-1**, **C-1**, or **D-1**] slot, a **DS1** (**T1EXT**) circuit pack must be installed in the protection **LS-**[**A-2**, **B-2**, **C-2**, or **D-2**] slot. If **BBF3 DS1PM** circuit packs are installed in service slots, then a **BBF3 DS1PM** circuit pack must be installed in the protection slot if protection is required.

NOTE:
For the 1X7 protection configuration, the circuit pack type installed in the **LS-D-2** slot is the only circuit pack type that is protected. In a 1X7 protection configuration, **177A** Apparatus Blank cards are required in unequipped LOW SPEED slots.

Install service and protection **BBF1( ) DS1** or **BBF3 DS1PM** circuit packs (if required). **DLP-508**

---

7. Install service and protection **BBF6 T1EXT** circuit packs (if required). **DLP-507**

DO ITEMS BELOW IN ORDER LISTED . . . . . FOR DETAILS, GO TO

8. If this is a 1X7 protection configuration, install **177A** Apparatus Blank cards in any unequipped LOW SPEED slot.

---

9. **NOTE:**
   A maximum of three **BBF8 HDSL** circuit packs, including a protection circuit pack, can be installed in any one LOW SPEED Group.

   Install **BBF8 HDSL** circuit packs (if required). **DLP-540**

---

10. Install **BBG4/BBG4B/BBG19 DS3** circuit packs (if required) **DLP-546**

---

11. **CAUTION:**
    The command **`init-sys:all`** *may affect service. It should never be used on an in-service system. It should be used only after a shelf has been equipped to reset all provisionable parameters and cross-connections to their default values.*

    NOTE:
    An `inconsistent DCC values` alarm will occur when the **`init-sys:all`** command is executed because "fecom" becomes enabled again. To clear the alarm, use the **`set-fecom:`***address***`:com=disable`** command to disable the DCC.

    Use the **`init-sys:all`** command to initialize all provisionable parameters to their original default values.

---

12. Use **`rtrv-eqpt`** command to verify shelf is equipped for low speed protection mode required (low-speed protection mode: 1X1 or 1X7).

---

13. Perform an LED test. **DLP-509**

DO ITEMS BELOW IN ORDER LISTED . . . . . FOR DETAILS, GO TO	
14. **NOTE:** This procedure assumes that the DDM-2000 FiberReach high speed signals are looped back [manual optical (**OLIU**) loopback].	
A. Perform local (looped back) DS1 transmission test.	**DLP-510**
B. Perform local (looped back) DS3 transmission test.	**DLP-545**
15. **NOTE:** This procedure assumes that the DDM-2000 FiberReach has been connected to the low-speed DSX cross-connection as required.	
A. Perform local wiring DS1 cross-connect test (looped back).	**DLP-510**
B. Perform local wiring DS3 cross-connect test (looped back).	**DLP-545**
16. Perform DDM-2000 FiberReach OC-1, OC-3, or OC-12 receiver sensitivity test (if required). Optional test.	**DLP-506**
17. Check office alarm interface as required.	**DLP-516**
18. Check telemetry interface as required.	**DLP-518**
19. Test protection switching function, if required.	**DLP-519**

DO ITEMS BELOW IN ORDER LISTED . . . . FOR DETAILS, GO TO

20. **CAUTION:**
The command **`init-sys:all`** *may affect service. It should never be used on an in-service system. It should be used only after a shelf has been equipped to reset all provisionable parameters and cross-connections to their default values.*

NOTE:
An `inconsistent DCC values` alarm will occur when the **`init-sys:all`** command is executed because "fecom" becomes enabled again. To clear the alarm, use the **`set-fecom:`***address***`:com=disable`** command to disable the DCC.

Use the **`init-sys:all`** command to initialize all provisionable parameters to their original default values.

---

21. **NOTE:**
A craft interface terminal (CIT) is required to access the optional features of the DDM-2000 FiberReach, such as system name, security and logins, date and time, far-end communications (fecom), etc.

NOTE:
If you choose to make VT1 cross-connections at this time using the **`ent-crs-( )`** commands, alarm activity will result when optical fiber loops are removed for end-to-end system testing.

Activate system features as required from work order or office records.

DO ITEMS BELOW IN ORDER LISTED . . . . . FOR DETAILS, GO TO

22. After all shelves in the network have been tested, you can establish the end-to-end DDM-2000 FiberReach OC-1, OC-3, or OC-12 subnetwork.

A.	Single-Homed OC-1 Access via DDM-2000 OC-3 or OC-12 Backbone Ring	**NTP-008**
B.	Dual-Homed OC-1 Access via DDM-2000 OC-3 or OC-12 Backbone Ring	**NTP-009**
C.	Stand Alone OC-1 Access via DDM-2000 OC-3 Host	**NTP-010**
D.	Single-Homed OC-3 Access via DDM-2000 OC-12 Backbone Ring	**NTP-020**
E.	Single-Homed OC-3 or OC-12 Access via FT-2000 OC-48 Backbone Ring	**NTP-021**
F.	Dual-Homed OC-3 or OC-12 Access via FT-2000 OC-48 Backbone Ring	**NTP-022**
G.	Dual-Homed OC-3 Access via DDM-2000 OC-12 Backbone Ring	**NTP-023**
H.	OC-3 Release 4 Linear Extension via DDM-2000 OC-3 Release 15 Backbone Ring	**NTP-030**
I.	OC-3 Release 4 Linear Extension via DDM-2000 OC-12 Backbone Ring	**NTP-031**
J.	OC-3/OC-12 Release 4 Linear Extension via FT-2000 OC-48 Backbone Ring	**NTP-032**
K.	OC-3/OC-12 Release 4 Linear Extension via WaveStar TDM 2.5G OC-48 or 10G OC-192 Backbone Ring	**NTP-034**
L.	OC-3/OC-12 Release 4 Single-Homed Access via WaveStar TDM 2.5G OC-48 or 10G OC-192 Backbone Ring	**NTP-035**
M.	OC-3/OC-12 Release 4 Dual-Homed Access via WaveStar TDM 2.5G OC-48 or 10G OC-192 Backbone Ring	**NTP-036**

Establish OC-1 Single-Homed FiberReach Access via DDM-2000 OC-3 or OC-12 Backbone Ring

DO ITEMS BELOW IN ORDER LISTED . . . . FOR DETAILS, GO TO

1. **WARNING:**
Unterminated optical connectors may emit invisible laser radiation. Avoid direct exposure to the beam. Do not view beam with optical instruments. Use of controls or adjustments or performance of procedures other than those specified herein may result in hazardous radiation exposure.

CAUTION:
DDM-2000 circuit packs contain static sensitive components which can be damaged by electrostatic discharge. A static ground wrist strap must be worn when handling the circuit packs. See electrostatic discharge considerations in **Trouble Clearing: TAD-100**.

NOTE:
If the DDM-2000 fails to respond in the indicated manner, refer to **Trouble Clearing: IXL-001**.

NOTE:
It is assumed the DDM-2000 FiberReach shelves have been equipped and tested (**System Turnup: NTP-007**). It is also assumed that all DDM-2000 OC-3 shelves in the system have passed the looped transmission test(s) and the DDM-2000 OC-3/OC-12 ring has been established (363-206-285, *DDM-2000 OC-3 Multiplexer, TARP Release 13 and Later, User/Service Manual (TOP) — Volume II*, **System Turnup: NTP-016**).

Determine the network configuration (for example, see Figure 1).

DO ITEMS BELOW IN ORDER LISTED . . . . . FOR DETAILS, GO TO

2. Verify that the DDM-2000 OC-3 host shelf is equipped with Release 13 or 15 software. Verify that the DDM-2000 FiberReach hosted shelf is equipped with Release 3 or 4 software. If not equipped with proper software, upgrade the DDM-2000 OC-3 host shelf and/or the FIberReach hosted shelf with the proper software.

3. Determine the optical loss of each optical span from office records or by making the required measurements.

4. **NOTE:**
   The User Side/Network Side parameters of the **`set-fecom:`** command must be set opposite at each end of the optical spans (for example, see Figures 2 and 3).

   Use the **`rtrv-fecom`**/**`set-fecom`** command to verify/set User Side/Network Side parameters at each end of optical span being established.

5. **NOTE:**
   The **`rtrv-sync:`** command retrieves the `Synchronization Report`. This report displays the provisioning and operational information on the synchronization attributes of the DDM-2000. See the "Commands and Reports" section of this manual for a description of the **`rtrv-sync:`** command format.

   Use the **`rtrv-sync:`** command to obtain the `Synchronization Report` and verify if Sync Autoreconfiguration is enabled. Use the **`set-sync:`** command to enable the Sync Autoreconfiguration parameter, if required.

6. Verify no duplicate TID settings exist. The **`rtrv-ne:`** command may be used at each shelf in the network to display settings. If duplicates exist, determine new settings and use the **`set-ne`** command to make new settings.

DO ITEMS BELOW IN ORDER LISTED . . . . FOR DETAILS, GO TO

7. **NOTE:**
An OC-3 host shelf with Release 15 and FiberReach OC-1 hosted shelf with Release 4 software will support AGNE(s) and alarm groups. An OC-3 host shelf with Release 13 and FiberReach hosted shelf with Release 3 software will **not** support these features and they will **not** appear in the alarm groups of a network with mixed software.

NOTE:
The Remote NE Status (**`rnestat`**) parameter of the **`set-ne:`** command must be enabled prior to designating the AGNE(s) and alarm group numbers.

NOTE:
FiberReach shelves may be designated as an alarm gateway network element (AGNE) and assigned an alarm group number. (Default alarm group number is 255.) At least one AGNE is required per alarm group. One primary AGNE and one backup per alarm group is recommmended. For a network greater than 16 nodes, the AGNE and TL1 GNE should be on separate nodes. The AGNE parameter of the **`set-ne:`** command may have been set to yes on each new shelf during shelf turnup procedures to suppress an `AGNE communication failure` alarm.

Use the **`set-ne:`** command to designate the AGNE(s) and alarm group numbers, as required.

---

8. **NOTE:**
Only **one** remote FiberReach OC-1 shelf is allowed in this single-homed configuration.

DO ITEMS BELOW IN ORDER LISTED . . . . . FOR DETAILS, GO TO

NOTE:
This single-homed ring configuration requires that the **FN-( )-1 OLIU** on the OC-3 shelf connect to the **MAIN-1 OLIU** at the FiberReach shelf. The **MAIN-2 OLIU** at the FiberReach shelf on the OC-1 ring connects to **FN-( )-2(P) OLIU** on the OC-3 shelf. See Figure 1. This procedure will establish the ring configuration starting from the OC-3/OC-12 host node to the FiberReach node, then from the FiberReach node back to the host OC-3/OC-12 node.

At the near end, remove the optical loop from the **27-Type OLIU** OC-1 line (**1** or **2(P)**) (for example in Figure 1, OC-3 shelf **FN-A-1**, OC-1 line **1**) associated with the optical span being established. At the other end of the optical span, remove the optical loop from the associated **26-Type OLIU** (for example, in Figure 1, FiberReach **MAIN-1 OLIU**).

---

9. **NOTE:**
The section data communication channel (DCC), used for far- end communications, must be enabled at each network element (shelf) optical interface being tested in order for the end-to-end line tests to work. Default condition for the DCC channel is "enabled." If it has been disabled, use the **`set-fecom`** command **at each shelf** to enable far-end communications.

At each shelf, use the **`set-fecom:`***address***`:com=enabled`** command to ensure far-end communications (fecom) is enabled.

---

10. Perform optical fiber connections and verification of the integrity of the optical span being established. **DLP-514**

DO ITEMS BELOW IN ORDER LISTED . . . . FOR DETAILS, GO TO

11. **NOTE:**
    Shelves that are part of a subnetwork being partitioned into multiple sreas require that the NSAP*AREA* field and level 2 IS-IS routing parameters of the **`ent-ulsdcc-l3`** command be set. See Section 11 “Commands and Reports” in 363-206-285, *DDM-2000 OC-3 Multiplexer, TARP Release 13 and Later, User/Service Manual - Volume I* and this manual, for an explanation of the command parameters and 824-102-144, *Lucent Technologies 2000 Product Family, Operations Interworking Guide for TARP Releases*, for an explanation of the engineering rules for subnetworking partitioning.

    Use the **`ent-ulsdcc-l3`** command to designate the NSAP*AREA* field and level 2 IS-IS routing, as required.

12. **NOTE:**
    The **`rtrv-pm-line`** command in the following procedure displays performance monitoring data associated with the OC-1 lines terminated on the system.

    Perform end-to-end OC-1 line test. **DLP-535**

13. Repeat this procedure for all OC-1 optical spans being established in the DDM-2000 OC-3/OC-1 network. Ensure that the last optical span connected to the OC-3 host shelf is connected to an **OLIU** in the opposite slot as the one in the first OC-1 span (for example, slot **1** for the first span and slot **2(P)** for the second span).

14. The system is ready for initial service to be established.
    Initial DS1 Service [**System Turnup: NTP-004**]
    Initial T1 Service [**System Turnup: NTP-013**]
    Initial HDSL Service [**System Turnup: NTP-017**]
    Initial DS3 Service [**System Turnup: NTP-025**]
    STS-3c Service [**System Turnup: NTP-016**]

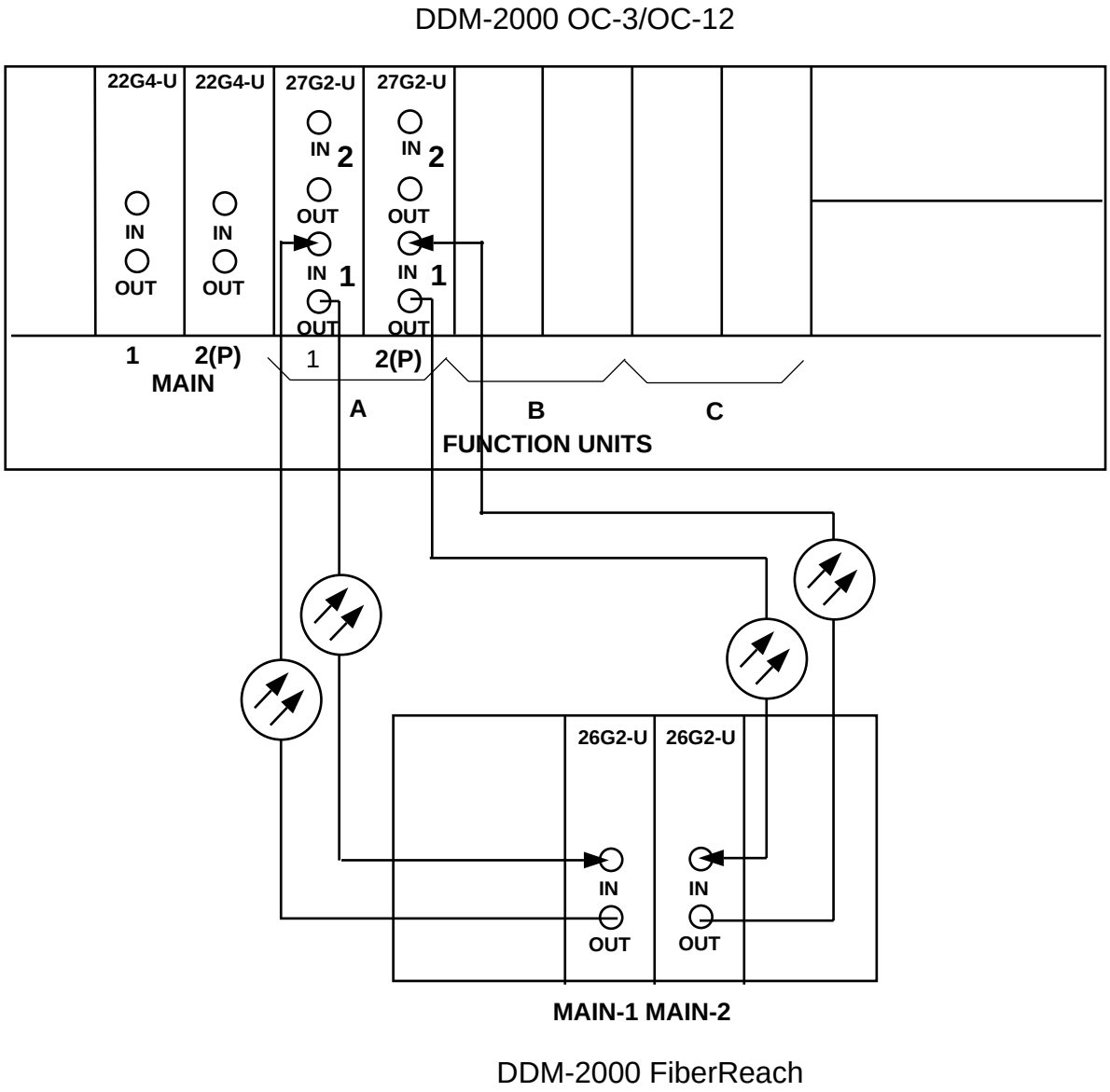

Figure 1 – Example Single-Home Ring Configuration Connections

DDM-2000 OC-3 DCC Network Side (NS)/User Side (US) Defaults (set-fecom:nsus=ns/us)								
22-Type OLIUs	**MAIN-1** dcc-m1	**MAIN-2** dcc-m2	**FN-A** dcc-a		**FN-B** dcc-b		**FN-C** dcc-c	
	US	NS	NS		NS		NS	
27-Type OLIUs	**MAIN-1** dcc-m1-1 dcc-m1-2	**MAIN-2** dcc-m2-1 dcc-m2-2	**FN-A-1** dcc-a1-1 dcc-a1-2	**FN-A-2** dcc-a2-1 dcc-a2-2	**FN-B-1** dcc-b1-1 dcc-b1-2	**FN-B-2** dcc-b2-1 dcc-b2-2	**FN-C-1** dcc-c1-1 dcc-c1-2	**FN-C-2** dcc-c2-1 dcc-c2-2
	US	NS	NS	US	NS	US	NS	US

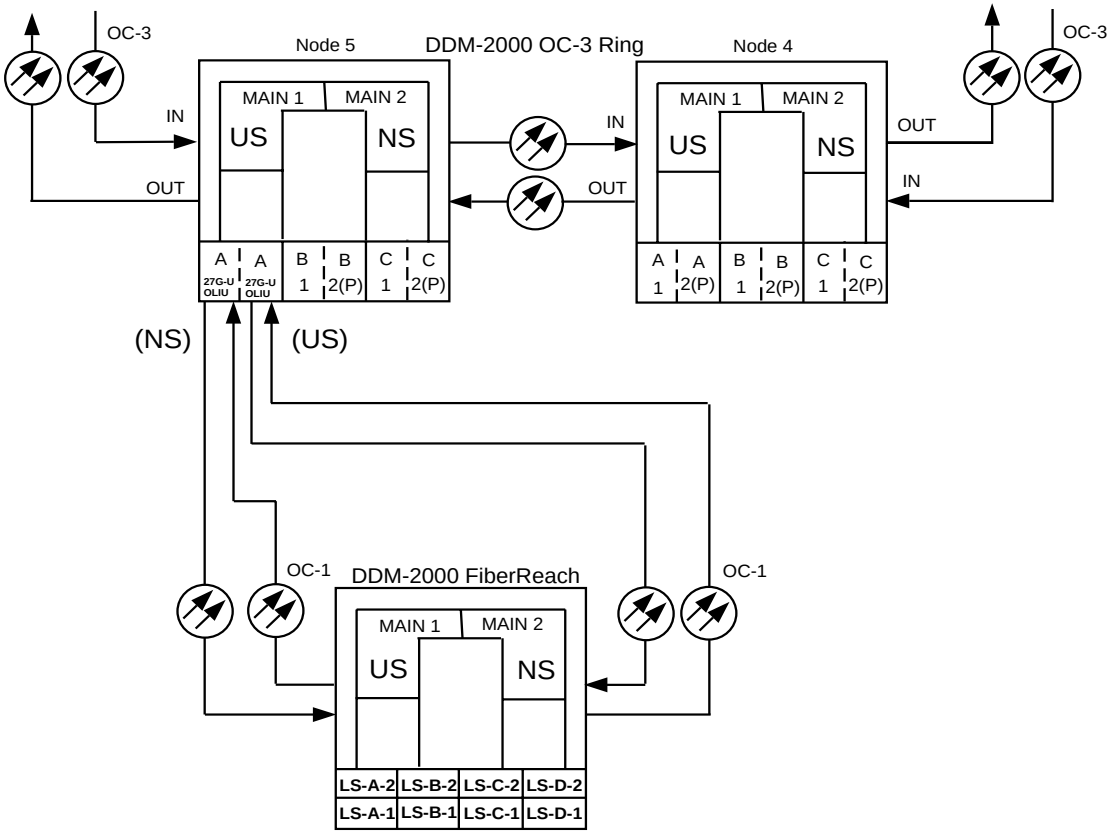

DDM-2000 FiberReach DCC Network Side (NS)/User Side (US) Defaults (set-fecom:nsus=ns/us)		
26-Type OLIUs	**MAIN-1** dcc-m1	**MAIN-2** dcc-m2
	US	NS

Figure 2 – Example of User Side/Network Side Value Settings (OC-3 Ring)

DDM-2000 OC-12 DCC Network Side (NS)/User Side (US) Defaults (set-fecom:nsus=ns/us)								
24/29-Type OLIUs	**MAIN-1** dcc-m1	**MAIN-2** dcc-m2	**FN-A** dcc-a		**FN-B** dcc-b		**FN-C** dcc-c	
	US	NS	NS		NS		NS	
27-Type OLIUs	**MAIN-1** dcc-m1-1 dcc-m1-2	**MAIN-2** dcc-m2-1 dcc-m2-2	**FN-A-1** dcc-a1-1 dcc-a1-2	**FN-A-2** dcc-a2-1 dcc-a2-2	**FN-B-1** dcc-b1-1 dcc-b1-2	**FN-B-2** dcc-b2-1 dcc-b2-2	**FN-C-1** dcc-c1-1 dcc-c1-2	**FN-C-2** dcc-c2-1 dcc-c2-2
	US	NS	NS	US	NS	US	NS	US

OC-12 Path Switched Ring with OC-3 Shelves with OC-12 Optics

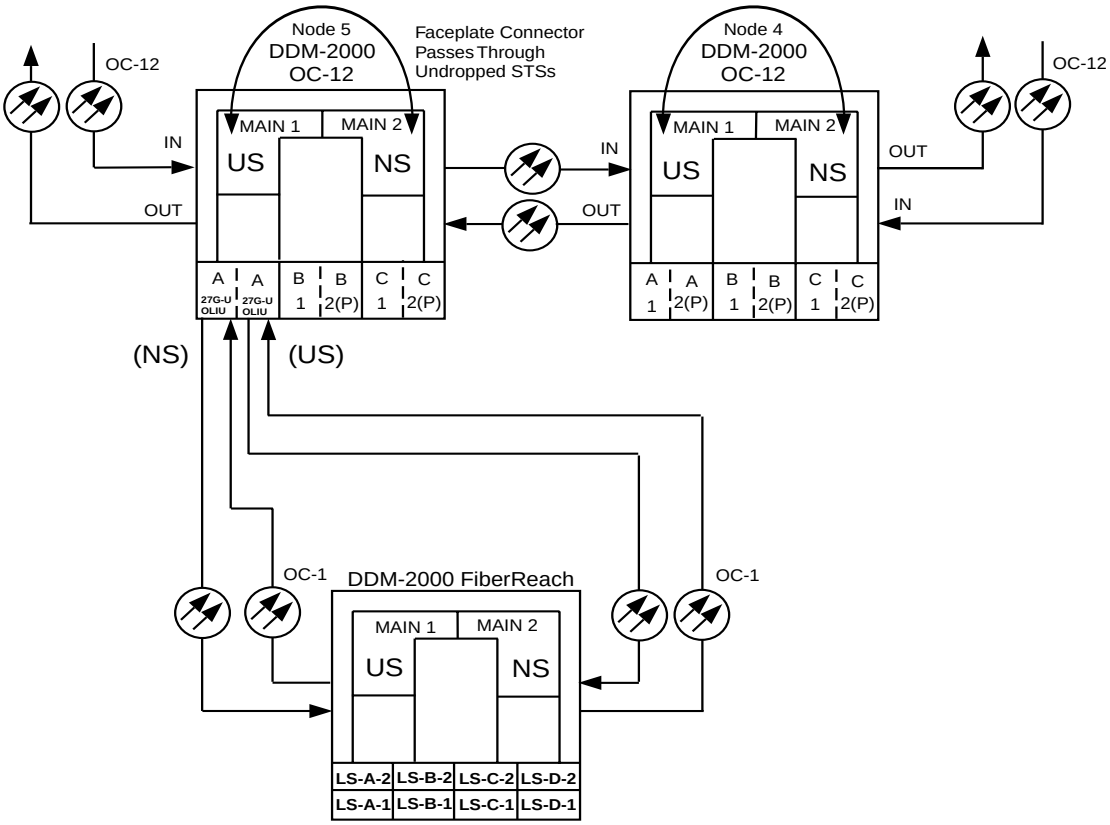

DDM-2000 FiberReach DCC Network Side (NS)/User Side (US) Defaults (set-fecom:nsus=ns/us)		
26-Type OLIUs	**MAIN-1** dcc-m1	**MAIN-2** dcc-m2
	US	NS

Figure 3 – Example of User Side/Network Side Value Settings (OC-12 Ring)

Establish OC-1 Dual-Homed FiberReach Access via DDM-2000 OC-3 or OC-12 Backbone Ring

DO ITEMS BELOW IN ORDER LISTED . . . . FOR DETAILS, GO TO

1. **WARNING:**
Unterminated optical connectors may emit invisible laser radiation. Avoid direct exposure to the beam. Do not view beam with optical instruments. Use of controls or adjustments or performance of procedures other than those specified herein may result in hazardous radiation exposure.

CAUTION:
DDM-2000 circuit packs contain static sensitive components which can be damaged by electrostatic discharge. A static ground wrist strap must be worn when handling the circuit packs. See electrostatic discharge considerations in **Trouble Clearing: TAD-100**.

NOTE:
If the DDM-2000 fails to respond in the indicate

NOTE:
It is assumed the DDM-2000 FiberReach shelves have been equipped and tested (**System Turnup: NTP-007**). It is also assumed that all DDM-2000 OC-3 shelves in the system have passed the looped transmission test(s) and the DDM-2000 OC-3 or OC-12 ring has been established (363-206-285, *DDM-2000 OC-3 Multiplexer, TARP Release 13 and Later, User/Service Manual (TOP) — Volume II*, **System Turnup: NTP-016**).

Determine the network configuration (for example, see Figures 1, 2, 3, and 4).

DO ITEMS BELOW IN ORDER LISTED. . . . . FOR DETAILS, GO TO

2. Verify that the DDM-2000 OC-3 host shelves (for example, Figures 1 and 2, nodes 4 and 5) are equipped with Release 13 or 15 software. Verify that the DDM-2000 FiberReach hosted shelf is equipped with Release 3 or 4 software. If not equipped with proper software, upgrade the DDM-2000 OC-3 host shelf and/or the FIberReach hosted shelf with the proper software.

3. Determine the optical loss of each optical span from office records or by making the required measurements.

4. **NOTE:**
   The Network Side/User Side parameters of the **`set-fecom:`** command must be set opposite at each end of the optical spans. For example, see Figures 5 and 6.

   Use the **`rtrv-fecom`**/**`set-fecom`** command to verify/set "Network Side/User Side" parameters at each end of OC-1 optical span being established.

5. **NOTE:**
   The **`rtrv-sync:`** command retrieves the `Synchronization Report`. This report displays the provisioning and operational information on the synchronization attributes of the DDM-2000. See the "Commands and Reports" section of this manual for a description of the **`rtrv-sync:`** command format.

   Use the **`rtrv-sync:`** command to obtain the `Synchronization Report` and verify if Sync Autoreconfiguration is enabled. Use the **`set-sync:`** command to enable the Sync Autoreconfiguration parameter, if required.

6. Verify no duplicate TID settings exist. The **`rtrv-ne:`** command may be used at each shelf in the network to display settings. If duplicates exist, determine new settings and use the **`set-ne:`** command to make new settings.

DO ITEMS BELOW IN ORDER LISTED . . . . FOR DETAILS, GO TO

7. **NOTE:**
OC-3 host shelves with Release 15 and FiberReach OC-1 hosted shelves with Release 4 software support AGNE(s) and alarm groups. OC-3 host shelves with Release 13 and FiberReach hosted shelves with Release 3 software do **not** support these features and will **not** appear in the alarm groups of a network with mixed software.

NOTE:
The Remote NE Status (**`rnestat`**) parameter of the **`set-ne:`** command must be enabled prior to designating the AGNE(s) and alarm group numbers.

NOTE:
FiberReach shelves may be designated as an alarm gateway network element (AGNE) and assigned an alarm group number. (Default alarm group number is 255.) At least one AGNE is required per alarm group. One primary AGNE and one backup per alarm group is recommmended. For a network greater than 16 nodes, the AGNE and TL1 GNE should be on separate nodes. The AGNE parameter of the **`set-ne:`** command may have been set to yes on each new shelf during shelf turnup procedures to suppress an `AGNE communication failure` alarm.

Use the **`set-ne:`** command to designate the AGNE(s) and alarm group numbers, as required.

8. **NOTE:**
Multiple shelves are allowed in the dual-homed configuration.

DO ITEMS BELOW IN ORDER LISTED . . . . . FOR DETAILS, GO TO

NOTE:
In dual homing configurations, **OLIU** circuit packs must be installed in the correct slots in the host OC-3/OC-12 nodes to support the direction of traffic required. For example, see Figures 1 and 2. In Figures 1 and 2, if a **27-Type OLIU** is installed in Node 5, **FUNCTION UNITS** GROUP **A**, slot **1**, traffic will be routed toward Node 6 when cross-connections are made. The other end of the associated OC-1 ring must be connected to a **27-Type OLIU** installed in slot **2(P)** of the **FUNCTION UNITS** GROUP **( )** being used to terminate the OC-1 line (for example, Node 4 in Figures 1 and 2). Traffic from Node 4 will then be directed toward Node 3 when cross-connections are made. In Figures 3 and 4, note that all traffic from the FiberReach shelf will be directed to Node 7 because of the slot positions that terminate the OC-1 line.

NOTE:
A dual-homed ring configuration requires that the first FiberReach **MAIN-1 OLIU** connect to **FUNCTION UNITS ( ) 1 OLIU** on one host OC-3 shelf. The last FiberReach **MAIN-2 OLIU** connects to the **FUNCTION UNITS ( ) 2(P) OLIU** on the other host OC-3 shelf. Intermediate FiberReach shelves on the same OC-1 ring connect from **MAIN-2 OLIU** at one FiberReach shelf to the **MAIN-1 OLIU** at an adjacent FiberReach shelf (node). For example, see Figures 7 and 8. This procedure will establish the ring configuration starting from one OC-3/OC-12 host node (near end) and continuing to an adjacent FiberReach node, then to the next FiberReach node until the final connection is made from the last FiberReach node to the remaining OC-3/OC-12 host node.

NOTE:
All unused ports on the **27-Type OLIU** must be set to nmon with the **`set-state-oc1`** command.

DO ITEMS BELOW IN ORDER LISTED . . . . FOR DETAILS, GO TO

At the near end OC-3/OC-12 host node, remove the optical loop from the **27-Type OLIU** OC-1 line (**1** or **2(P)**) being used for the OC-1 ring configuration (for example, in Figures 7 and 8, OC-3 shelf Node 5, slot **FUNCTION UNITS A 1**, OC-1 line 1). At the other end of the optical span being established, remove the optical loop from the associated **26-Type OLIU** (for example, in Figures 7 and 8, FiberReach **MAIN-1 OLIU**).

---

9. **NOTE:**
The section data communication channel (DCC), used for far-end communications, must be enabled at each network element (shelf) optical interface being tested in order for the end-to-end line tests to work. Default condition for the DCC channel is "enabled." If it has been disabled, use the **`set-fecom`** command **at each shelf** to enable far-end communications.

At each shelf, use the **`set-fecom:`***address***`:com=enabled`** command to ensure far-end communications (fecom) is enabled.

---

10. Perform optical fiber connections and verification of the integrity of the optical span being established. **DLP-514**

---

11. **NOTE:**
Shelves that are part of a subnetwork being partitioned into multiple sreas require that the NSAP*AREA* field and level 2 IS-IS routing parameters of the **`ent-ulsdcc-l3`** command be set. See Section 11 “Commands and Reports” in 363-206-285, *DDM-2000 OC-3 Multiplexer, TARP Release 13 and Later, User/Service Manual - Volume I* and this manual, for an explanation of the command parameters and 824-102-144, *Lucent Technologies 2000 Product Family, Operations Interworking Guide for TARP Releases*, for an explanation of the engineering rules for subnetworking partitioning.

Use the **`ent-ulsdcc-l3`** command to designate the NSAP*AREA* field and level 2 IS-IS routing, as required.

DO ITEMS BELOW IN ORDER LISTED . . . . . FOR DETAILS, GO TO

12. **NOTE:**
    The **`rtrv-pm-line`** command in the following procedure displays performance monitoring data associated with the OC-1 lines terminated on the system.

    Perform end-to-end OC-1 line test. **DLP-535**

13. Repeat this procedure for all OC-1 optical spans being established in the DDM-2000 OC-3 or OC-12/OC-1 network. Ensure that the last optical span connected to the OC-3 host shelf is connected to an **OLIU** in the opposite slot as the one in the first host OC-3 shelf (for example, slot **2(P)** at one node and slot **1** at the other node).

14. The dual-homed FiberReach access network is now is ready for initial service to be established.
    Initial DS1 Service [**System Turnup: NTP-004**]
    Initial T1 Service [**System Turnup: NTP-013**]
    Initial HDSL Service [**System Turnup: NTP-017**]
    Initial DS3 Service [**System Turnup: NTP-025**]
    STS-3c Service [**System Turnup: NTP-016**]

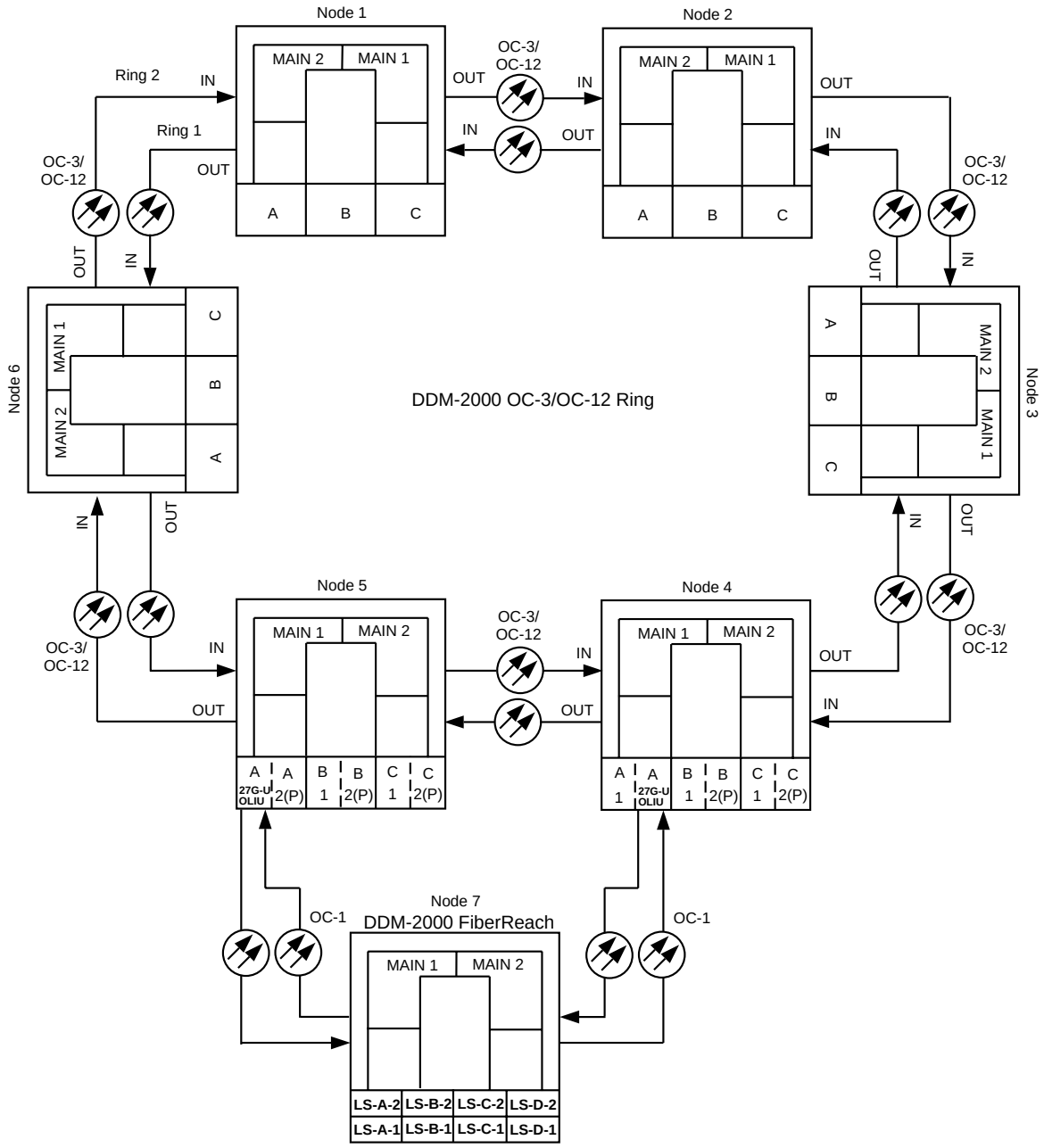

Figure 1 – Example Dual-Homed OC-1/OC-3 Ring Configuration

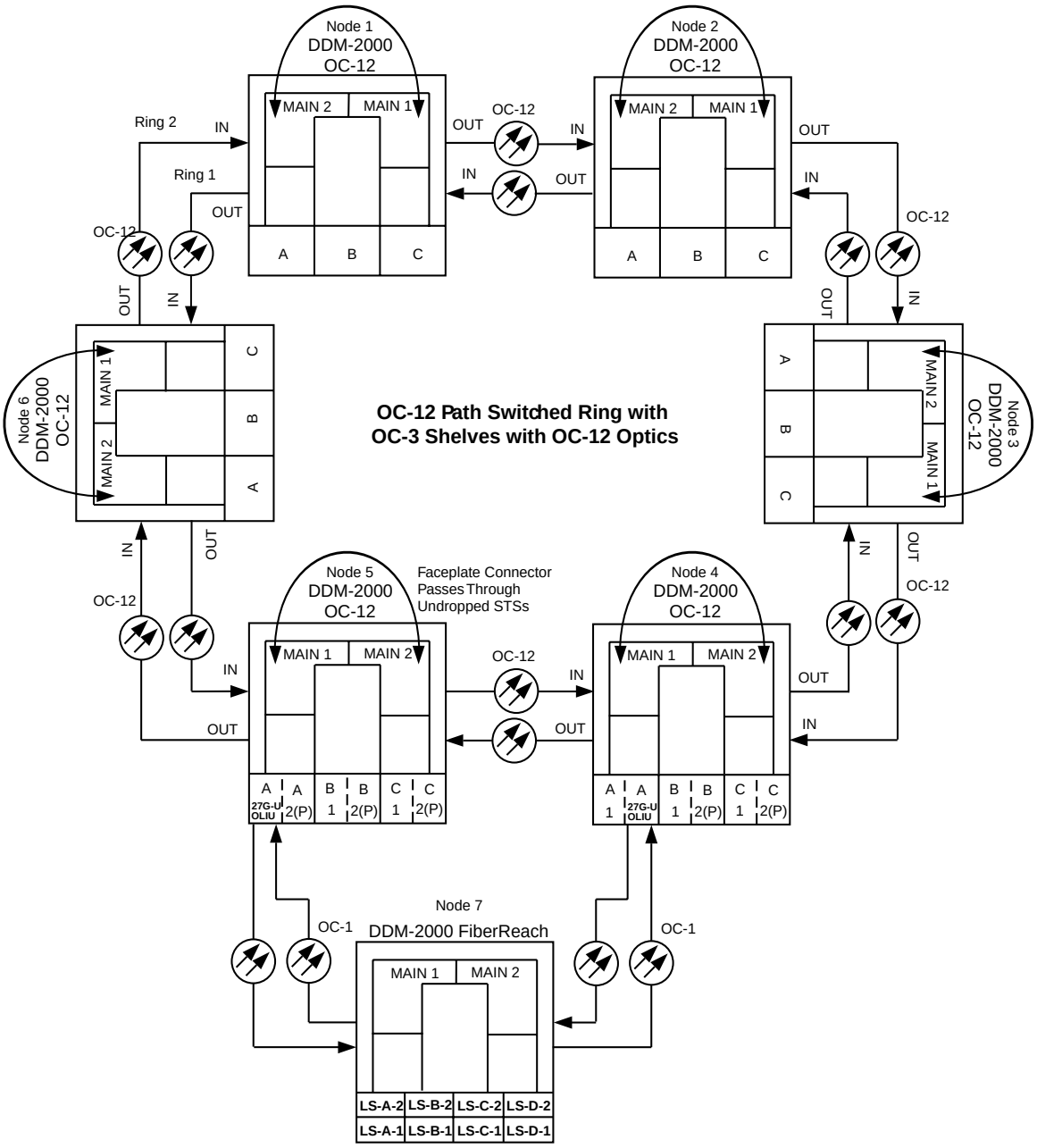

Figure 2 – Example Dual-Homed OC-1/OC-12 Ring Configuration

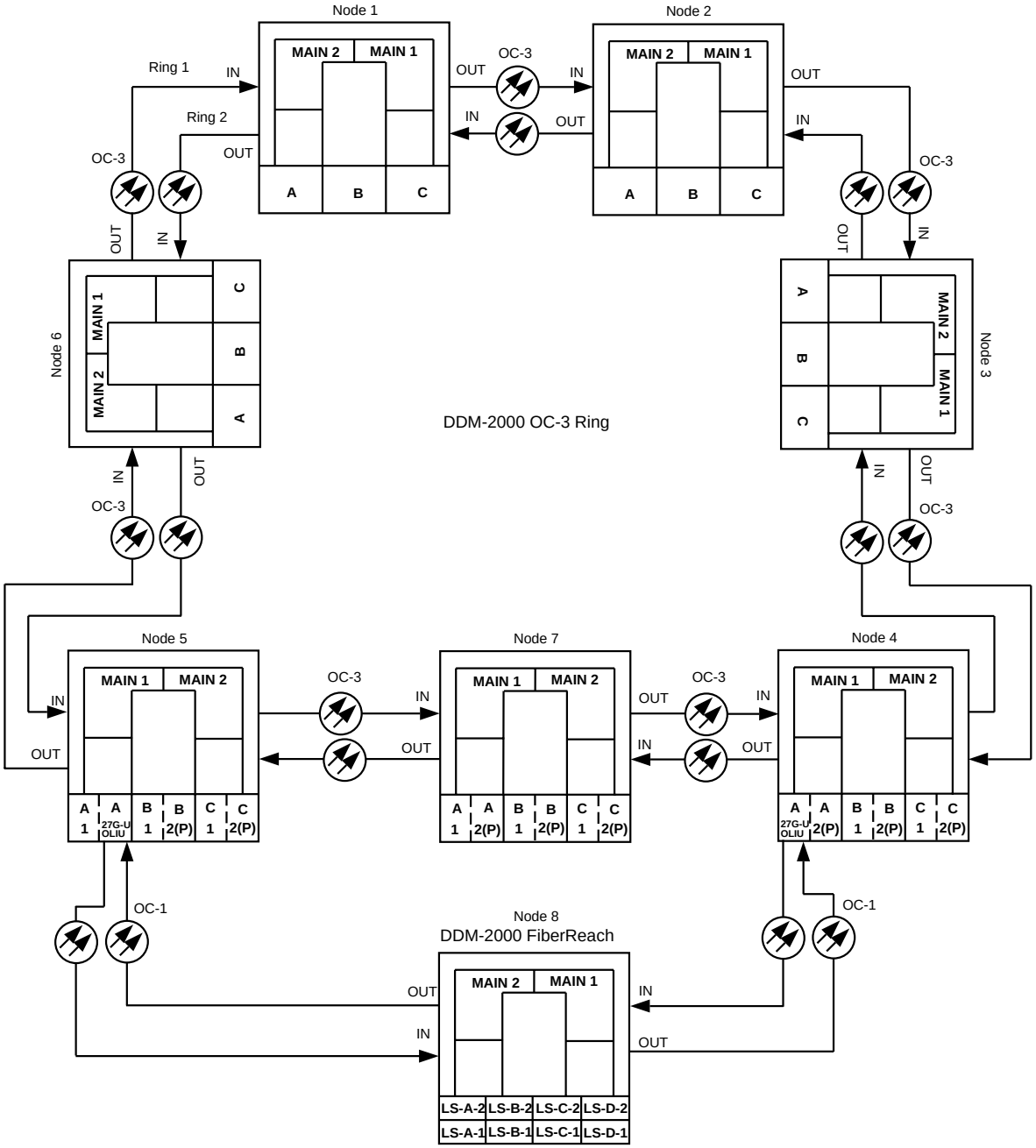

Figure 3 – Example Dual-Homed OC-1/OC-3 Ring Configuration

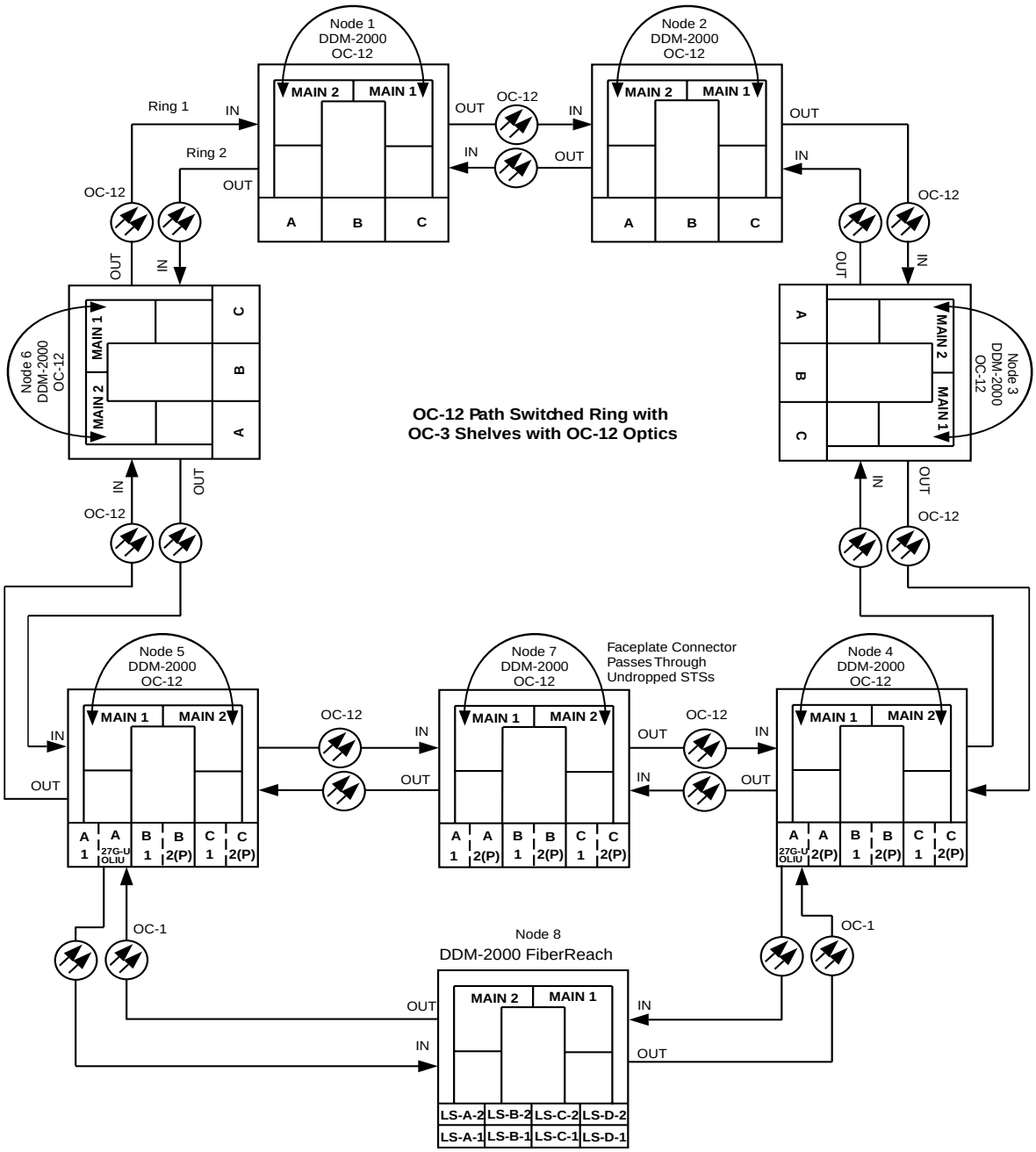

Figure 4 – Example Dual-Homed OC-1/OC-12 Ring Configuration

DDM-2000 OC-3 DCC Network Side (NS)/User Side (US) Defaults (set-fecom:nsus=ns/us)								
22-Type OLIUs	**MAIN-1** dcc-m1	**MAIN-2** dcc-m2	**FN-A** dcc-a		**FN-B** dcc-b		**FN-C** dcc-c	
	US	NS	NS		NS		NS	
27-Type OLIUs	**MAIN-1** dcc-m1-1 dcc-m1-2	**MAIN-2** dcc-m2-1 dcc-m2-2	**FN-A-1** dcc-a1-1 dcc-a1-2	**FN-A-2** dcc-a2-1 dcc-a2-2	**FN-B-1** dcc-b1-1 dcc-b1-2	**FN-B-2** dcc-b2-1 dcc-b2-2	**FN-C-1** dcc-c1-1 dcc-c1-2	**FN-C-2** dcc-c2-1 dcc-c2-2
	US	NS	NS	US	NS	US	NS	US

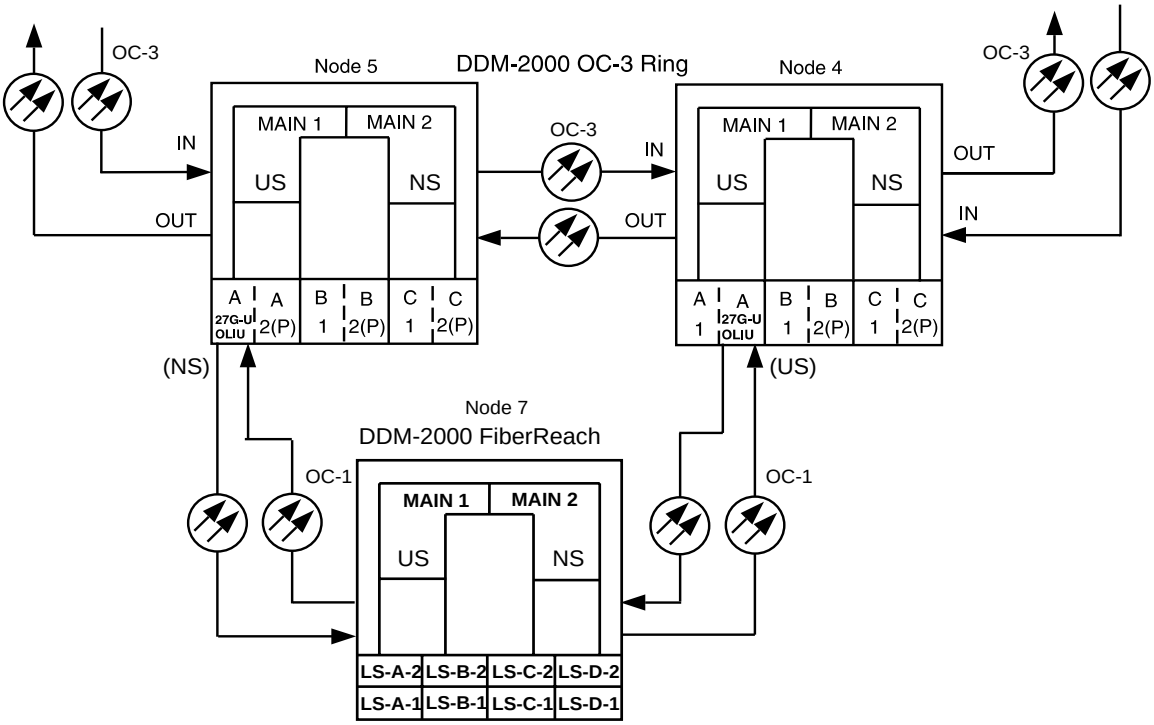

DDM-2000 FiberReach OC-1 DCC Network Side (NS)/User Side (US) Defaults (set-fecom:nsus=ns/us)		
26-Type OLIUs	**MAIN-1** dcc-m1	**MAIN-2** dcc-m2
	US	NS

Figure 5 – Example of User Side/Network Side Value Settings (OC-3 Ring)

DDM-2000 OC-12 DCC Network Side (NS)/User Side (US) Defaults (set-fecom:nsus=ns/us)								
24/29-Type OLIUs	**MAIN-1** dcc-m1	**MAIN-2** dcc-m2	**FN-A** dcc-a		**FN-B** dcc-b		**FN-C** dcc-c	
	US	NS	NS		NS		NS	
27-Type OLIUs	**MAIN-1** dcc-m1-1 dcc-m1-2	**MAIN-2** dcc-m2-1 dcc-m2-2	**FN-A-1** dcc-a1-1 dcc-a1-2	**FN-A-2** dcc-a2-1 dcc-a2-2	**FN-B-1** dcc-b1-1 dcc-b1-2	**FN-B-2** dcc-b2-1 dcc-b2-2	**FN-C-1** dcc-c1-1 dcc-c1-2	**FN-C-2** dcc-c2-1 dcc-c2-2
	US	NS	NS	US	NS	US	NS	US

OC-12 Path Switched Ring with
OC-3 Shelves with OC-12 Optics

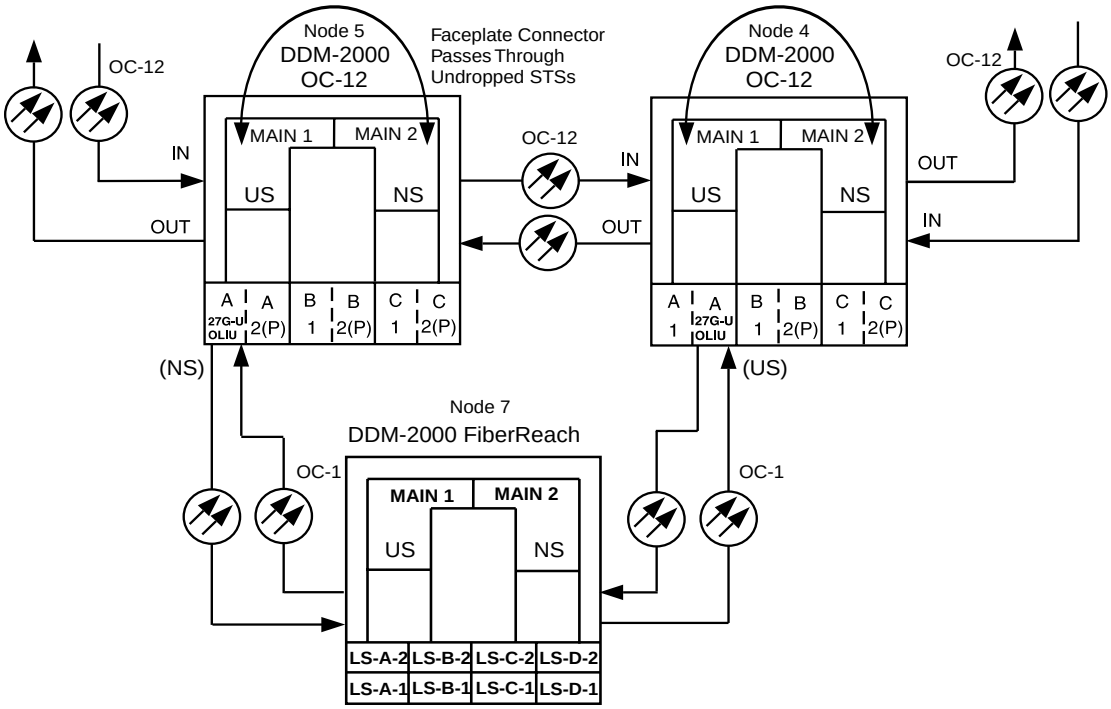

DDM-2000 FiberReach OC-1 DCC Network Side (NS)/User Side (US) Defaults (set-fecom:nsus=ns/us)		
26-Type OLIUs	**MAIN-1** dcc-m1	**MAIN-2** dcc-m2
	US	NS

Figure 6 – Example of User Side/Network Side Value Settings (OC-12 Ring)

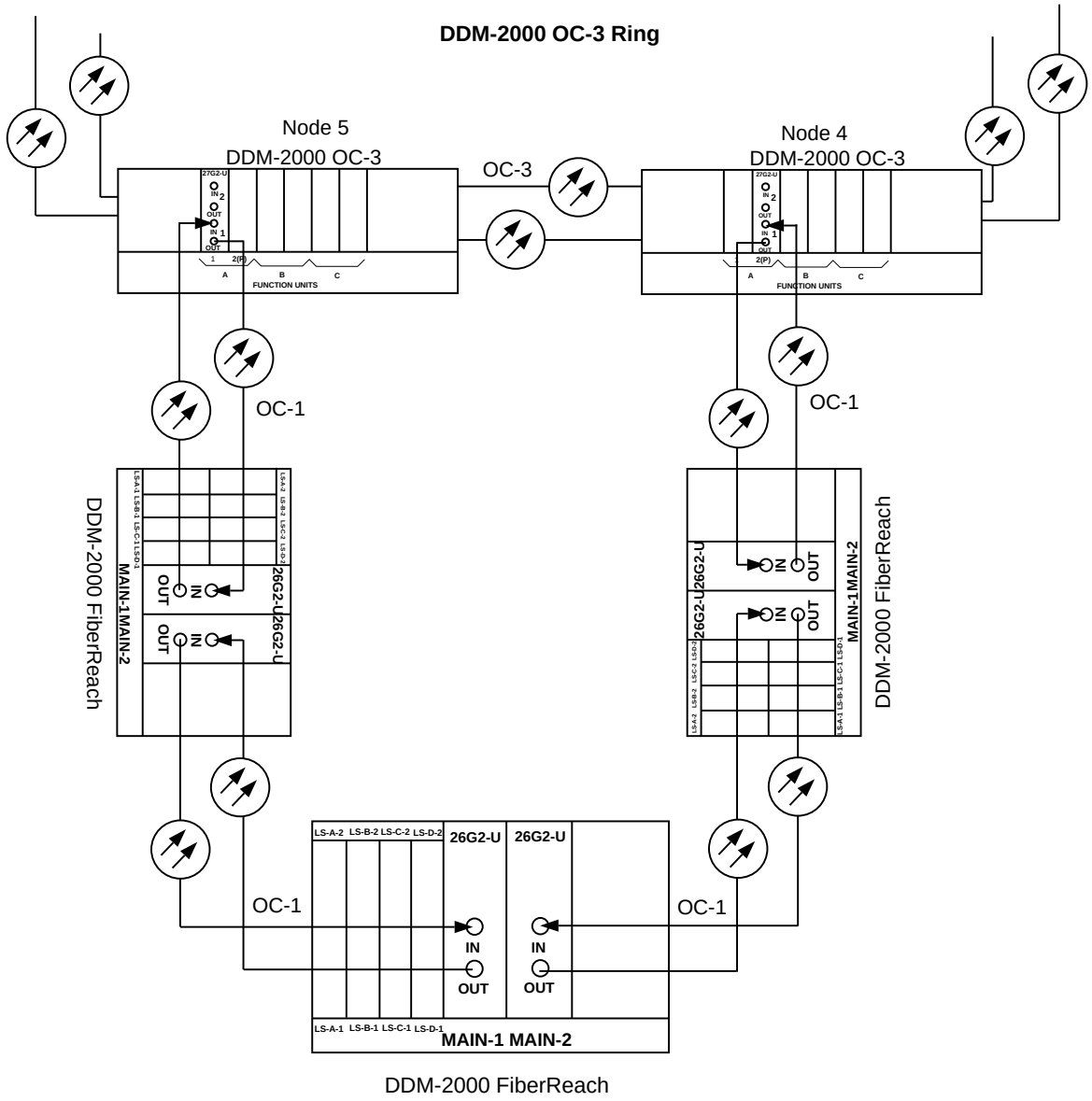

Figure 7 – Example of Dual-Homed OC-1/OC-3 Ring Configuration Connections

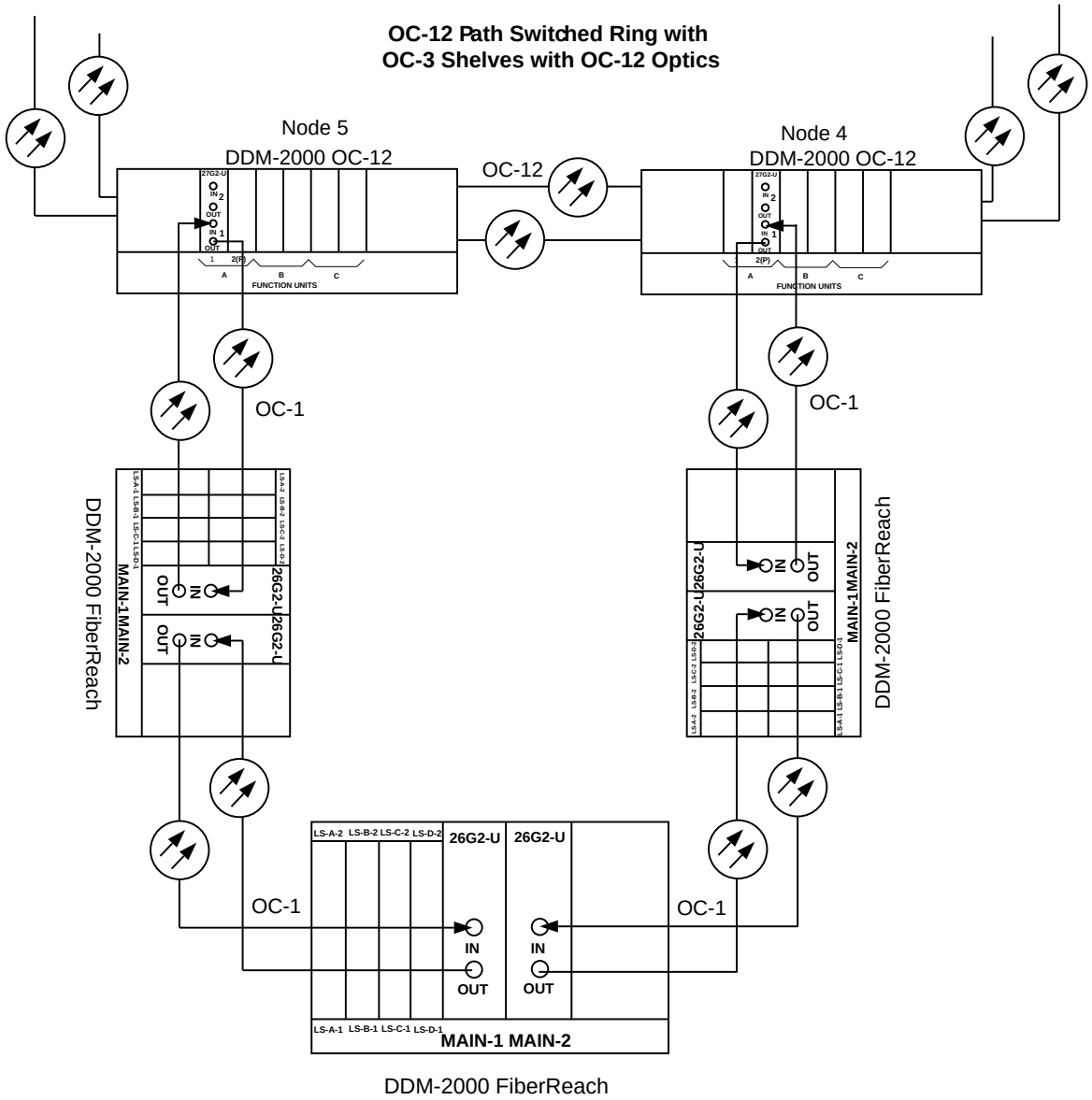

Figure 8 – Example of Dual-Homed OC-1/OC-12 Ring Configuration Connections

Establish OC-1 Stand-Alone FiberReach Access via DDM-2000 OC-3 Host Shelf

DO ITEMS BELOW IN ORDER LISTED . . . . FOR DETAILS, GO TO

1. **WARNING:**
Unterminated optical connectors may emit invisible laser radiation. Avoid direct exposure to the beam. Do not view beam with optical instruments. Use of controls or adjustments or performance of procedures other than those specified herein may result in hazardous radiation exposure.

CAUTION:
DDM-2000 circuit packs contain static sensitive components which can be damaged by electrostatic discharge. A static ground wrist strap must be worn when handling the circuit packs. See electrostatic discharge considerations in **Trouble Clearing: TAD-100**.

NOTE:
If the DDM-2000 fails to respond in the indicated manner, refer to **Trouble Clearing: IXL-001**.

NOTE:
It is assumed that the DDM-2000 FiberReach shelf in the system has passed the looped transmission test(s) (**System Turnup: NTP-007**). It is also assumed the DDM-2000 OC-3 shelves have been equipped and tested (363-206-285, *DDM-2000 OC-3 Multiplexer, TARP Release 13 and Later, User/Service Manual (TOP) — Volume II*, **System Turnup: NTP-016**).

Determine the network configuration (for example, see Figure 1).

DO ITEMS BELOW IN ORDER LISTED . . . . . FOR DETAILS, GO TO

2. Verify that the host DDM-2000 OC-3 shelf is equipped with Release 13 or 15 software. Verify that the hosted DDM-2000 FiberReach shelf is equipped with Release 3 or 4 software. If not equipped with the proper software, upgrade with the proper software.

3. Determine the optical loss of each optical span from office records or by making the required measurements.

4. **NOTE:**
   The Network Side/User Side parameters of the **`set-fecom:`** command must be set opposite at each end of the optical spans. For example, see Figure 2.

   Use the **`rtrv-fecom`**/**`set-fecom`** command to verify/set "Network Side/User Side" parameters at each end of optical span being established.

5. **NOTE:**
   The **`rtrv-sync:`** command retrieves the `Synchronization Report`. This report displays the provisioning and operational information on the synchronization attributes of the DDM-2000. See the "Commands and Reports" section of this manual for a description of the **`rtrv-sync:`** command format.

   Use the **`rtrv-sync:`** command to obtain the `Synchronization Report` and verify if Sync Autoreconfiguration is enabled. Use the **`set-sync:`** command to enable the Sync Autoreconfiguration parameter, if required.

6. Verify no duplicate TID settings exist. The **`rtrv-ne:`** command may be used at each shelf in the network to display settings. If duplicates exist, determine new settings and use the **`set-ne:`** command to make new settings.

DO ITEMS BELOW IN ORDER LISTED . . . . FOR DETAILS, GO TO

7. **NOTE:**
OC-3 shelves with Release 15 and FiberReach OC-1 shelves with Release 4 software support AGNE(s) and alarm groups. OC-3 shelves with Release 13 and FiberReach shelves with Release 3 software do **not** support these features and will **not** appear in the alarm groups of a network with mixed software.

NOTE:
The Remote NE Status (**`rnestat`**) parameter of the **`set-ne:`** command must be enabled prior to designating the AGNE(s) and alarm group numbers.

NOTE:
FiberReach shelves may be designated as an alarm gateway network element (AGNE) and assigned an alarm group number. (Default alarm group number is 255.) At least one AGNE is required per alarm group. One primary AGNE and one backup per alarm group is recommmended. For a network greater than 16 nodes, the AGNE and TL1 GNE should be on separate nodes. The AGNE parameter of the **`set-ne:`** command may have been set to yes on each new shelf during shelf turnup procedures to suppress an `AGNE communication failure` alarm.

Use the **`set-ne:`** command to designate the AGNE(s) and alarm group numbers, as required.

---

8. **CAUTION:**
Stand-alone OC-3 shelves can be timed from an external source, set as free-running, or line timed from **FUNCTION UNITS C** slot. Stand-alone OC-3 shelves cannot be line timed from the **MAIN** slots. Therefore, if the OC-3 shelf is to be line timed, the **`set-sync:src=fn-c`** must be used to derive timing from the **FUNCTION UNITS C** slot.

NOTE:
At the OC-3 shelf, if line timing mode is specified or external timing mode is specified but the timing reference was not available at shelf turnup, the **TGS/TG3** option switches are probably set for *free running*. Before the end-to-end system is established, the specified timing mode must be set on the **TGS/TG3** circuit packs.

DO ITEMS BELOW IN ORDER LISTED . . . . . FOR DETAILS, GO TO

NOTE:
If the option switch setting is changed, an update must be done by momentarily depressing the **UPD/INIT** button on the **SYSCTL** after the **TGS/TG3** circuit packs are reinstalled.

NOTE:
If external timing is selected and the **NE ACTY** LED remains lighted after the **TGS/TG3** circuit pack is reinserted, use the CIT and the **`rtrv-sync`** command to check the operational mode of the system. If the mode is `Holdover` instead of `External`, check that the incoming timing references are connected. Also check `Mode Switching` (revertive or nonrevertive) and the external `DS1 Line Code/Format` switch settings.

Set timing mode on **TGS/TG3** circuit packs to the timing mode specified in work order or office records. Use the **`set-sync:`** command to set the OC-3 synchronization source, if required, (363-206-285, *DDM-2000 OC-3 Multiplexer, TARP Release 13 and Later, User/Service Manual (TOP) — Volume II,* **Detailed Level Procedures: DLP-513**).

---

9. **NOTE:**
This stand-alone ring configuration requires that the **MAIN 1 OLIU** on the OC-3 shelf connect to the **MAIN-2 OLIU** at the first FiberReach shelf from the OC-3 shelf. **MAIN-1 OLIU** at the FiberReach shelf (node) connects to the **MAIN-2 OLIU** at an adjacent FiberReach shelf (node). The **MAIN-1 OLIU** at the last FiberReach shelf on the OC-1 ring connects to **MAIN 2(P) OLIU** on the host OC-3 shelf. See Figure 1. This procedure will establish the ring configuration starting from the OC-3 host node (near-end) to the first FiberReach node, then continuing to the next node until the final connection is made from the last FiberReach node back to the host OC-3 node.

NOTE:
All unused ports on the **27-Type OLIU** must be set to *nmon* with the **`set-state-oc1`** command.

DO ITEMS BELOW IN ORDER LISTED . . . . FOR DETAILS, GO TO

At the near end, remove the optical loop from the **27-Type OLIU** OC-1 line (**1** or **2**) (for example in Figure 1, OC-3 shelf **MAIN 1**, OC-1 line 1) associated with the optical span being established. At the other end of the optical span, remove the optical loop from the associated **26-Type OLIU** (for example, in Figure 1, FiberReach **MAIN-2 OLIU**).

10. Perform optical fiber connections and verification of the integrity of the optical span being established. **DLP-514**

11. **NOTE:**
Shelves that are part of a subnetwork being partitioned into multiple sreas require that the NSAP*AREA* field and level 2 IS-IS routing parameters of the **`ent-ulsdcc-l3`** command be set. See Section 11 “Commands and Reports” in 363-206-285, *DDM-2000 OC-3 Multiplexer, TARP Release 13 and Later, User/Service Manual - Volume I* and this manual, for an explanation of the command parameters and 824-102-144, *Lucent Technologies 2000 Product Family, Operations Interworking Guide for TARP Releases*, for an explanation of the engineering rules for subnetworking partitioning.

Use the **`ent-ulsdcc-l3`** command to designate the NSAP*AREA* field and level 2 IS-IS routing, as required.

12. **NOTE:**
The **`rtrv-pm-line`** command in the following procedure displays performance monitoring data associated with the OC-1 lines terminated on the system.

Perform end-to-end OC-1 line test. **DLP-535**

13. Repeat this procedure for all OC-1 optical spans back to the host OC-3 shelf.

DO ITEMS BELOW IN ORDER LISTED . . . . . FOR DETAILS, GO TO

14. The system is now is ready for initial service to be established.
    Initial DS1 Service [**System Turnup: NTP-004**]
    Initial T1 Service [**System Turnup: NTP-013**]
    Initial HDSL Service [**System Turnup: NTP-017**]
    Initial DS3 Service [**System Turnup: NTP-025**]
    STS-3c Service [**System Turnup: NTP-016**]

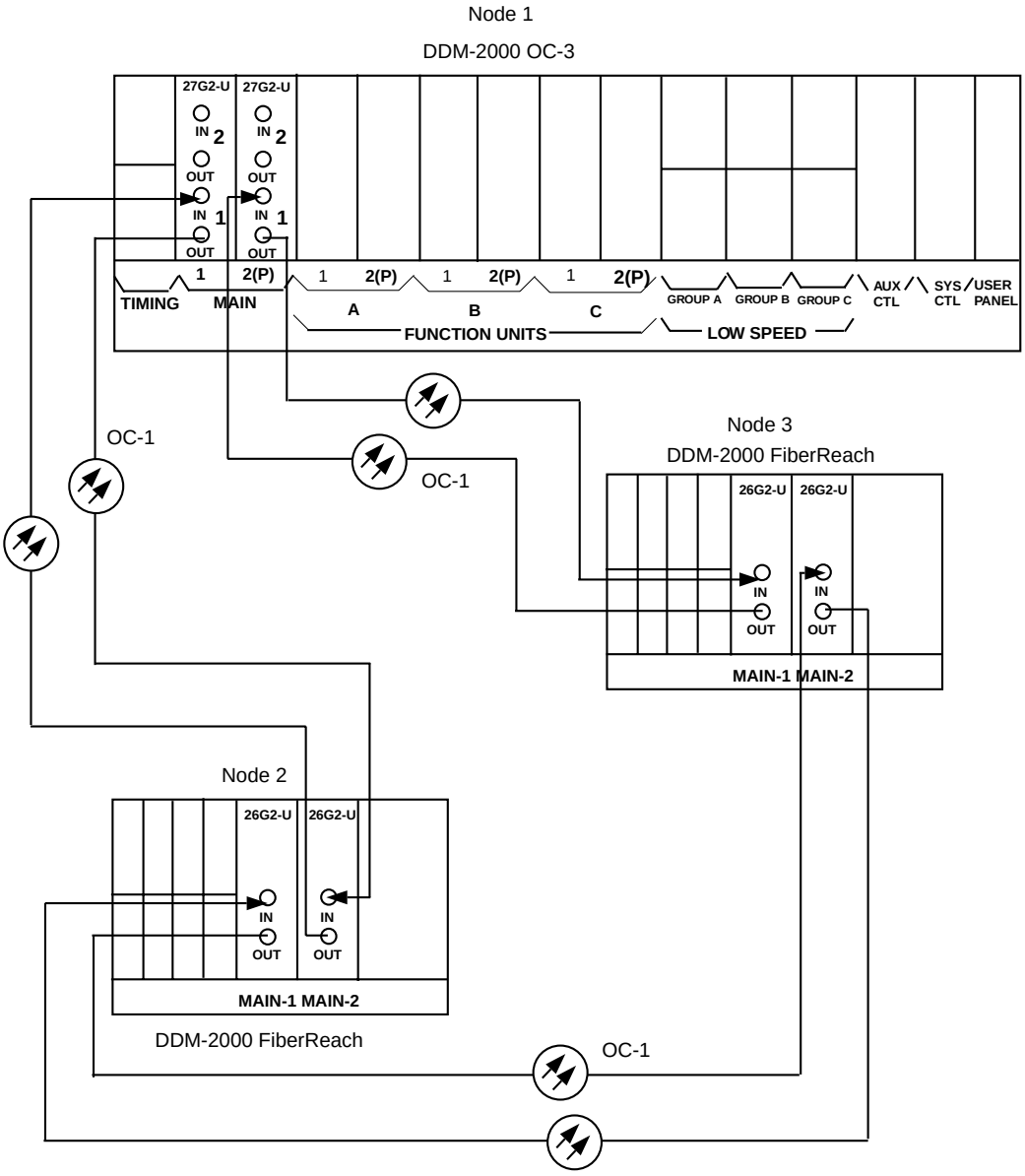

Figure 1 – Example of Stand-Alone OC3/OC1 Configuration Connections

DDM-2000 OC-3 DCC Network Side (NS)/User Side (US) Defaults (set-fecom:nsus=ns/us)								
22-Type OLIUs	**MAIN-1** dcc-m1	**MAIN-2** dcc-m2	**FN-A** dcc-a		**FN-B** dcc-b		**FN-C** dcc-c	
	US	NS	NS		NS		NS	
27-Type OLIUs	**MAIN-1** dcc-m1-1 dcc-m1-2	**MAIN-2** dcc-m2-1 dcc-m2-2	**FN-A-1** dcc-a1-1 dcc-a1-2	**FN-A-2** dcc-a2-1 dcc-a2-2	**FN-B-1** dcc-b1-1 dcc-b1-2	**FN-B-2** dcc-b2-1 dcc-b2-2	**FN-C-1** dcc-c1-1 dcc-c1-2	**FN-C-2** dcc-c2-1 dcc-c2-2
	US	NS	NS	US	NS	US	NS	US

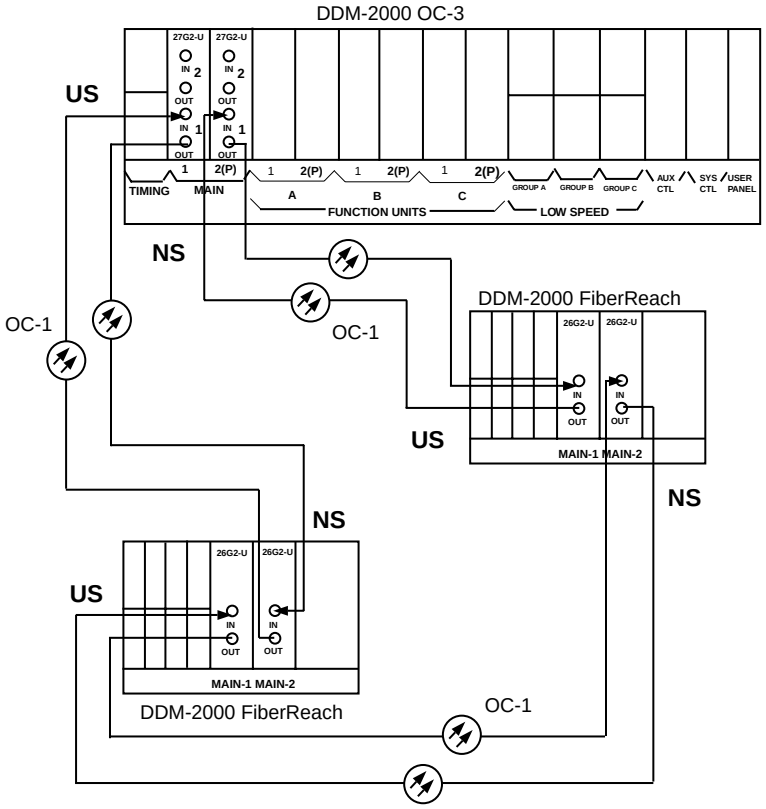

DDM-2000 FiberReach DCC Network Side (NS)/User Side (US) Defaults (set-fecom:nsus=ns/us)		
26-Type OLIUs	**MAIN-1** dcc-m1	**MAIN-2** dcc-m2
	US	NS

Figure 2 – Example of User Side/Network Side Value Settings

Install DS1 Protection Bus Module (1X1 or 1X7) System Out-of-Service

DO ITEMS BELOW IN ORDER LISTED . . . . FOR DETAILS, GO TO

1. **NOTE:**
   This procedure is used to verify/install the proper DS1 protection bus module (Release 2.0 or later) prior to mounting the FiberReach shelf. If the system is already in service and the protection mode is being changed, use the procedures of **NTP-012** instead of this procedure. A 1X1 or 1X7 protection bus module must be installed for proper shelf operation and to provide the kind of low-speed protection desired.

   Determine which protection bus module [847578390 (1X1) or 847578416 (1X7)] is required.

2. **CAUTION:**
   Use caution when removing the small screws used to mount the protection assembly cover. A magnetic screwdriver will speed the removal and installation of the screws.

   See Figure 1. At right rear of shelf, remove the metal protection assembly cover by removing the four mounting screws.

3. If a protection bus module is already installed, verify it is the proper module. If a protection bus module is not installed, insert the proper module into connector **P2**. (The connector is keyed to ensure proper insertion.)

4. Reinstall the metal protection assembly cover.

DO ITEMS BELOW IN ORDER LISTED . . . . . FOR DETAILS, GO TO

5. If the proper protection bus module was already installed, verify the proper low-speed designation strip label is placed on the middle designation strip located between the LOW SPEED slots on front of shelf. If the proper designation strip label is not attached to the middle designation strip, peel off the label backing and place the proper label on the middle designation strip at the front of the shelf. See Figure 2.

6. If the protection mode is **1X7**, low-speed cables must be connected from **J50, J51, J52**, and **J53** to the DSX-1 or DS1 Interconnect Assembly. If the protection mode is 1X1, you must not connect the low-speed cables to **J52** and **J53**. See Figure 1.

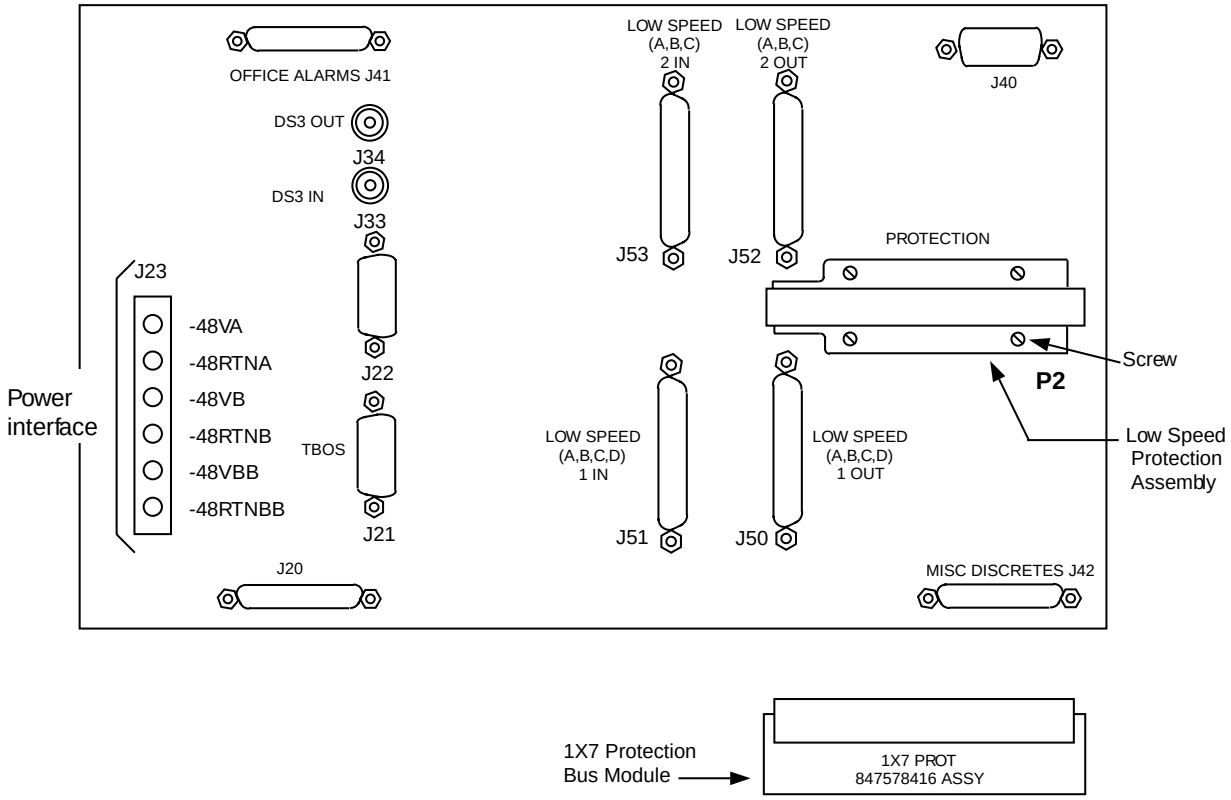

Figure 1 – FiberReach Protection Bus Module (1X1 or 1X7) Installation

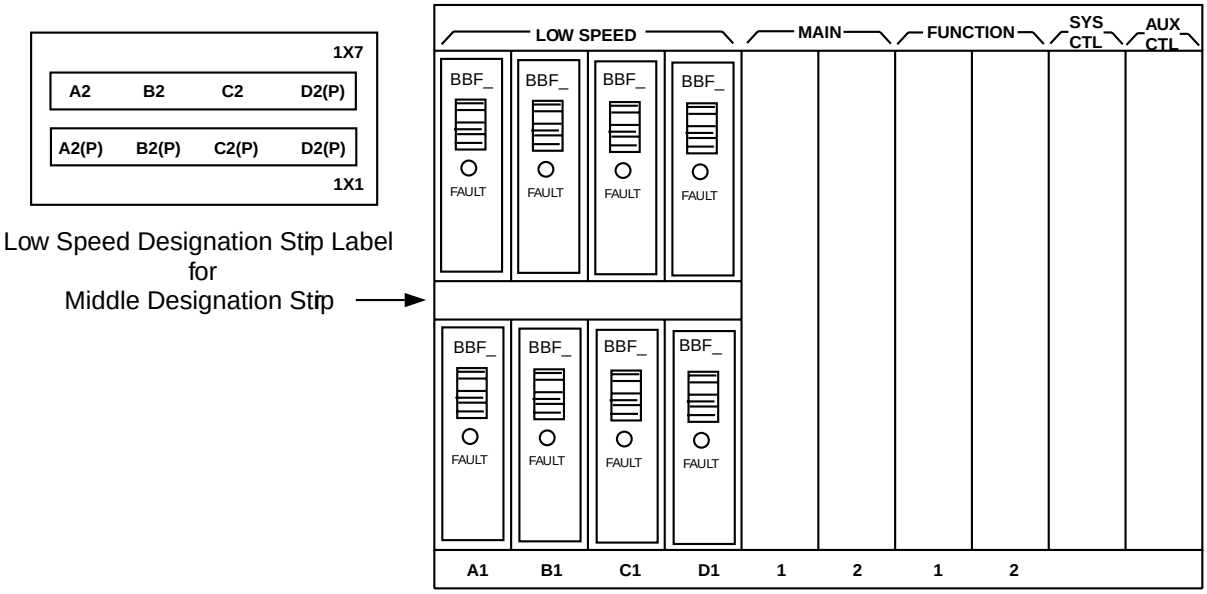

Figure 2 – FiberReach Protection Mode Label Position

Change DS1 Protection Bus Module (1X1 or 1X7) Low-Speed Slots Out-of-Service

DO ITEMS BELOW IN ORDER LISTED	FOR DETAILS, GO TO
1. **CAUTION:** *This procedure can only be performed with the FiberReach LOW SPEED slots out of service.* **NOTE:** This procedure is used to change the low speed protection mode of a FiberReach wideband shelf to 1X1 or 1X7 (Release 2.0 or later). The LOW SPEED DS1 slots must be taken out of service before performing this procedure. If the shelf has not been mounted, use the procedures of **NTP-011** instead of this procedure. Determine which protection bus module [847578390 (1X1) or 847578416 (1X7)] is required.	
2. Remove all low-speed DS1/T1 service (signals) from the FiberReach shelf.	**NTP-005**
3. Clear all active external protection switch requests (locked, forced, or manual) using the **`switch-ls:`***`address`***`:pri=reset`** command.	
4. Remove all low-speed loopbacks using the **`rls-lpbk-t1:`** command.	
5. Delete all low-speed cross-connections using the **`dlt-crs-vt1:`** command.	
6. Remove all low-speed **DS1/DS1PM/T1EXT** circuit packs.	

DO ITEMS BELOW IN ORDER LISTED . . . . . FOR DETAILS, GO TO

7. ⚠ **CAUTION:**
   Use caution when removing the small screws used to mount the protection assembly cover. A magnetic screwdriver will speed the removal and installation of the screws.

   See Figure 1. At right rear of shelf, remove the metal protection assembly cover by removing the four mounting screws.

8. Remove existing protection bus module. Insert the new module into connector **P2**. (The connector is keyed to ensure proper insertion.)

9. Reinstall the metal protection assembly cover.

10. If the protection mode is **1X7**, low-speed cables must be connected from **J50**, **J51**, **J52,** and **J53** to the DSX-1 or DS1 Interconnect Assembly. If the protection mode is **1X1**, you **must not** connect the low-speed cables to **J52** and **J53**. See Figure 1.

11. Peel off the label backing from the protection mode designation label. Place the label on the middle designation strip located between the LOW SPEED slots on front of shelf. See Figure 2.

12. Reset the shelf (unplug and reseat **SYSCTL** or use **`reset`** command).

13. Use **`rtrv-eqpt`** command to verify that the low-speed protection mode has been changed (`Low speed protection mode: 1X1 or 1X7`).

14. The system is now ready for service to be established.
    Initial DS1 Service [**System Turnup: NTP-004**]
    Initial T1 Service [**System Turnup: NTP-013**]
    Initial HDSL Service [**System Turnup: NTP-017**]

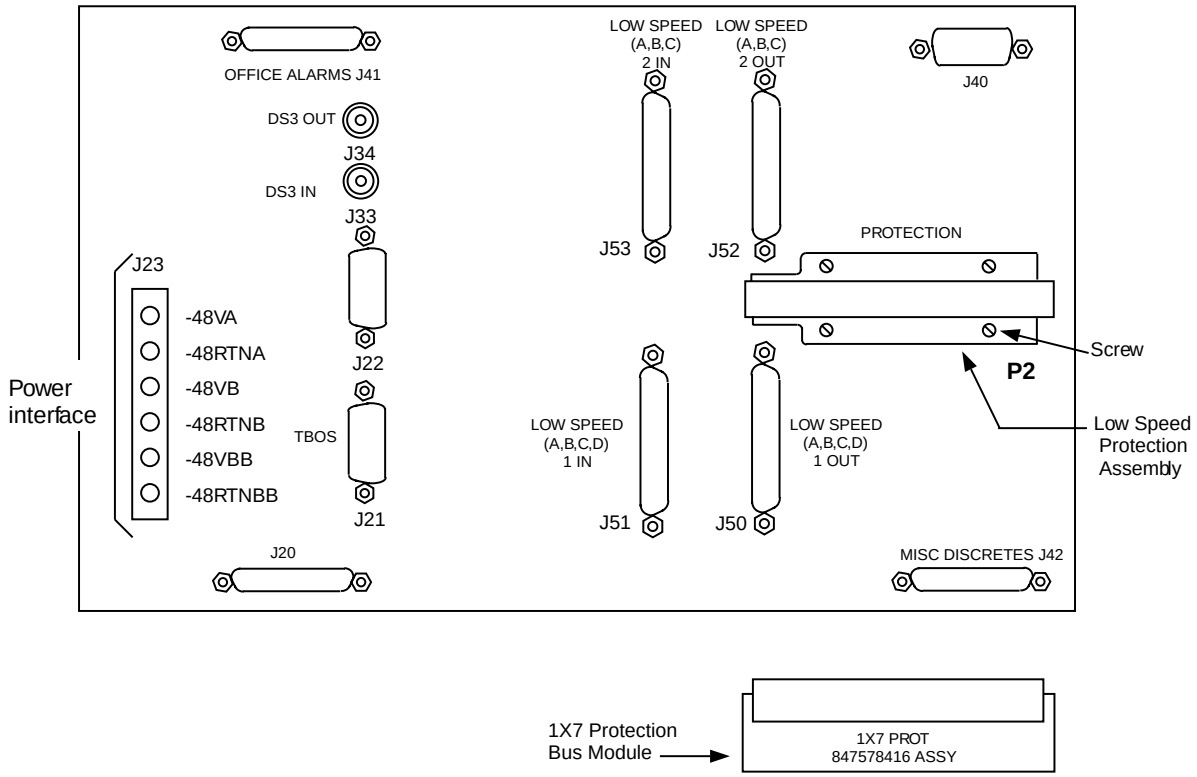

Figure 1 – FiberReach Protection Bus Module (1X1 or 1X7) Installation

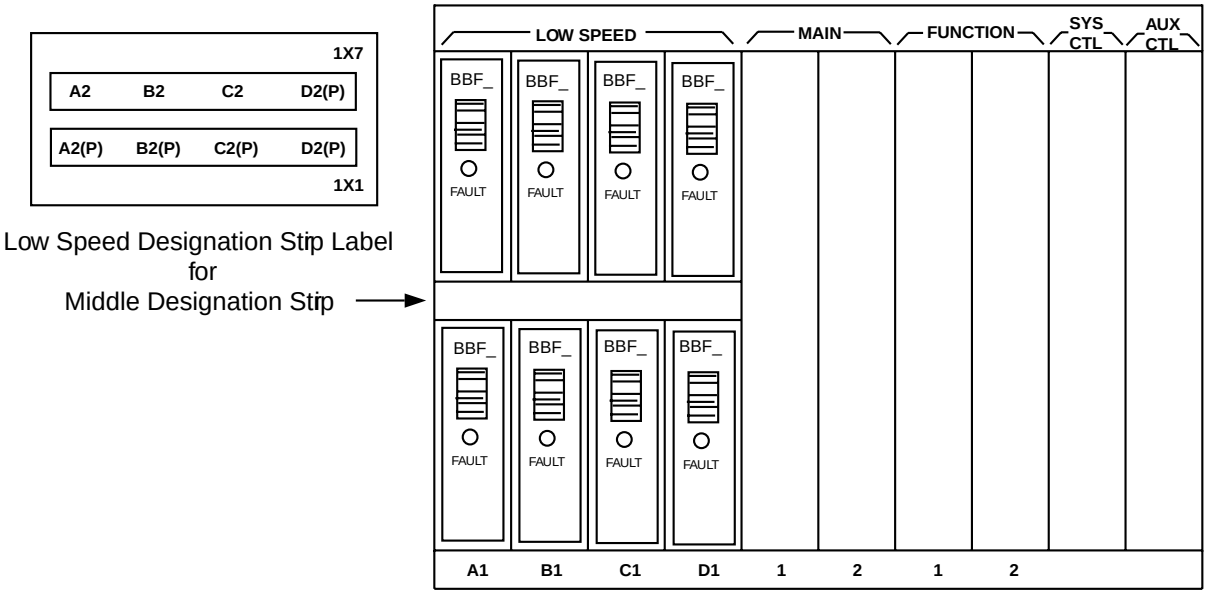

Figure 2 – FiberReach Protection Mode Label Position

Establish Initial End-to-End T1 Service (Low-Speed Slot Equipped But Not in Service)

DO ITEMS BELOW IN ORDER LISTED . . . . FOR DETAILS, GO TO

1. **CAUTION:**
DDM-2000 circuit packs contain static sensitive components which can be damaged by electrostatic discharge. A static ground wrist strap must be worn when handling the circuit packs. See electrostatic discharge considerations in **Trouble Clearing: TAD-100**.

NOTE:
The FiberReach and host system must be established before continuing with this procedure. If all the nodes of the network have not been equipped and installed, refer to **System Turnup/Circuit Order: IXL-001** for procedures to equip the DDM-2000 shelves and establish the system.

NOTE:
This procedure assumes that **T1EXT** circuit packs have already been installed during initial shelf turnup and circuit packs have been installed during initial shelf turnup at the other T1 terminating end(s) of the circuit. If the terminating end is in another system, it is assumed that the appropriate installation and connections have been made to that system. If the appropriate circuit packs have not been installed and the system is in service on other groups, refer to **System Turnup/Circuit Order: IXL-001** for procedures to add new T1 service.

NOTE:
If the DDM-2000 fails to respond in the indicated manner, refer to **Trouble Clearing: IXL-001**.

Verify that no LEDs or alarms are activated. If any LEDs or alarms are activated, refer to **Trouble Clearing: IXL-001** and follow the appropriate trouble-clearing procedure.

DO ITEMS BELOW IN ORDER LISTED . . . . . FOR DETAILS, GO TO

2. **NOTE:**
   The **`rtrv-eqpt:`** command retrieves the `Equipage and Version Report`. This report lists the circuit pack type and version information for one or more slots. See the "Commands and Reports" section of this manual for a description of the **`rtrv-eqpt:`** command format.

   At each FiberReach terminating end, use the **`rtrv-eqpt:`** command to obtain the `Equipage and Version Report` and verify that the proper service and protection (if required) **T1EXT** circuit packs have been installed in LOW SPEED slot(s) being put into service.

3. At the T1 terminating node(s) of the circuit being established, determine which T1 port(s) is to be put into service and what options are to be selected.

4. **NOTE:**
   The **`rtrv-t1:`** command retrieves the `T1 Port Provisioning Report`. This report lists information about each T1 port. This information includes attributes set by the **`set-t1:`** command. See the "Commands and Reports" section of this manual for a description of the **`rtrv-t1:`** command format.

   At each T1 terminating node, use the **`rtrv-t1:`** command to obtain the `T1 Port Provisioning Report` and verify the hardware and software option settings.

5. At each T1 terminating node, use the **`set-t1:`** command to set the characteristics of the T1 port of the circuit being established.

6. At each T1 terminating node, make the appropriate cable connection(s) to the DS1 interconnect assembly, cross- connect point(s), or equivalent connection point(s) for the circuit being added.

DO ITEMS BELOW IN ORDER LISTED . . . . FOR DETAILS, GO TO

7. Verify that no LEDs or alarms are activated. If any LEDs or alarms are activated, refer to **Trouble Clearing: IXL-001** and follow the appropriate trouble-clearing procedure.

8. **NOTE:**
   DS1 cross-connections have to be made at each shelf to configure the transmission path for each T1 circuit being established. Either terminating (drop) cross-connections are made at terminating nodes and pass-through cross-connections are made at intermediate nodes.

   NOTE:
   The following commands may be used to delete, enter, and retrieve cross-connections: **`dlt-crs-vt1`**, **`ent-crs-vt1`**, and **`rtrv-crs-vt1`**. See the "Commands and Reports" section of this manual for a description of commands. See "Cross- Connection Provisioning" in the "Administration and Provisioning" section of this manual for more information on cross-connection provisioning.

   Determine the necessary cross-connections for each node from the work order or circuit order.

9. Make necessary VT1.5/STS1 cross-connections at each node in the network.

   A. Single/Dual Homed OC-3 or OC-12/OC-1 Configuration **DLP-526**

   B. Stand Alone OC-3/OC-1 Ring Configuration **DLP-528**

   C. Single/Dual OC-48 or OC-192/OC-3 or OC-12 Ring Configuration **DLP-530**

   D. Single/Dual OC-12/OC-3 Ring Configuration **DLP-535**

DO ITEMS BELOW IN ORDER LISTED . . . . . FOR DETAILS, GO TO

10. **NOTE:**
    For a DS1 circuit in a path protected ring network, the **`sw-path-( ):address`** command must be used at the terminating nodes to switch the active VT1.5 (DS1) path to repeat this test on the other path(s).

    Perform DS1 end-to-end transmission test for each circuit being put into service, as required. **DLP-510**

11. Use the **`rtrv-state:`** command to determine the port state of the DS1 port(s) of the circuit being established.

12. **NOTE:**
    If a port is in the *nmon (n)* state, the signal is not monitored or alarmed. The port will not automatically go to the *in service (i)* state when a signal is detected as it will in the *auto (a)* state. In the nmon state, the port must be returned to the auto state, using the **`set-state-t1:`** command, to turn on monitoring of signal failures and before any circuit packs associated with that port can be removed from the equipment list by the upd command.

    Use the **`rtrv-state-t1/set-state-t1:`** command to verify/set the port state of the T1 port(s) of the circuit being established.

Add New T1 Service

DO ITEMS BELOW IN ORDER LISTED . . . . FOR DETAILS, GO TO

1. **CAUTION:**
DDM-2000 FiberReach circuit packs contain static sensitive components which can be damaged by electrostatic discharge. A static ground wrist strap must be worn when handling the circuit packs. See electrostatic discharge considerations in **Trouble Clearing: TAD-100***.*

NOTE:
This procedure assumes that a new T1 port or **T1EXT** circuit pack is being added to a DDM-2000 FiberReach shelf that is already in service. It also assumes that **STS1E** circuit packs have been installed if the other end is an EC-1 interface.

NOTE:
For the 1X1 protection configuration, circuit packs are protected on a one-to-one basis. For example, if protection is required for a **T1EXT** circuit pack in a service **LS -**[**A-1**, **B-1**, **C-1**, or **D-1**] slot, a **T1 EXT** circuit pack must be installed in the protection **LS-**[**A-2**, **B-2**, **C-2**, or **D-2**] slot.

NOTE:
For the 1X7 protection configuration, the circuit pack type installed in the **LS-D-2** slot is the only circuit pack type that is protected. In a 1X7 protection configuration, **177A** Apparatus Blank cards are required in unequipped LOW SPEED slots.

DO ITEMS BELOW IN ORDER LISTED . . . . . FOR DETAILS, GO TO

NOTE:
Standard T1 transmitter sources are designed to terminate in a nominal 100-ohm impedance. This termination is usually provided by the receiving equipment. When not connected to receiving equipment (that is, idle or unterminated), T1 transmitter equipment should terminate in a 100-ohm load. When connecting through DSX equipment, this can be accomplished with terminating plugs available from the DSX manufacturer. Any alternative method may be used resulting in 100-ohms across the TIP and RING of the T1 circuit output while in an idle state. Failure to terminate T1 outputs may result in violation of FCC Part 15 emission requirements and possibly interfere with other electronic equipment. Also, AIS should be turned off (using the **`set-t1:`***`address`***`:ais=no`** command) on any T1 circuit that is not in service.

NOTE:
If the DDM-2000 FiberReach fails to respond in the indicated manner, refer to **Trouble Clearing: IXL-001**.

Determine which T1 ports/slots are to be put into service and what options are to be selected.

2. Verify that no LEDs or alarms are activated. If any LEDs or alarms are activated, refer to **Trouble Clearing: IXL-001** and follow the appropriate trouble-clearing procedure.

DO ITEMS BELOW IN ORDER LISTED . . . . FOR DETAILS, GO TO

3. **CAUTION:**
To minimize "hits" on in-service ports on **T1EXT** *circuit packs having a port added, it is recommended that a CIT be used to manually switch (using the* **`switch-ls:`** *command) the T1 to protection if the* **T1EXT** *circuit pack is removed or to set channel options without removing the circuit pack.*

CAUTION:
If the protection **T1EXT** *circuit pack is not available for a protection switch, removing a service* **T1EXT** *circuit pack will interrupt service on all ports on that circuit pack. If a CIT is available, use the* **`rtrv-state:`** *command to check the status of the protection switch.*

Condition **T1EXT** circuit pack for new T1 service being added. **DLP-538**

4. At each T1 terminating node, use the **`set-t1:`** command to set the characteristics of the T1 port being established, if not already performed.

5. At each T1 terminating node, make the appropriate cable connection(s) to the DS1 interconnect assembly, cross connect, or equivalent connection point(s) for the circuit(s) being added.

6. Verify that no LEDs or alarms are activated. If any LEDs or alarms are activated, refer to **Trouble Clearing: IXL-001** and follow the appropriate trouble-clearing procedure.

DO ITEMS BELOW IN ORDER LISTED . . . . . FOR DETAILS, GO TO

7. **NOTE:**
   To configure the transmission path for each T1 circuit being established, terminating (drop) cross-connections or "drop and continue" cross-connections must be made at terminating nodes and pass-through cross-connections made at intermediate nodes.

   NOTE:
   In ring configurations, you should use the following rules in establishing cross-connections in each ring:

   1. All drop connections (including DRI, if present) from the same STS-1 timeslot must be provisioned the same, either all VT1.5 or STS-1.
   2. If all 28 VT1.5s (DS1s) in an STS-1 are being passed through at a node in a VT1.5 path-switched ring, then the cross- connection may be provisioned as either a pass-through STS-1 or VT1.5. However, if you anticipate dropping VT1.5s from the pass-through node in the future, you should provision the pass-throughs as VT1.5 cross-connections.
   3. On STS-1 path-switched rings, all nodes in the ring must be provisioned as STS-1 cross-connections.

   NOTE:
   The following commands may be used to convert, delete, enter, and retrieve cross-connections: **`dlt-crs-sts1`**, **`dlt-crs-vt1`**, **`ent-crs-sts1`**, **`ent-crs-vt1`**, **`rtrv-crs-sts1`**, and **`rtrv-crs-vt1`**. See the "Commands and Reports" section of this manual for a description of commands. See "Cross-Connection Provisioning" in the "Administration and Provisioning" section of this manual for more information on cross-connection provisioning.

   Determine the necessary cross-connections for each node from the work order or circuit order.

DO ITEMS BELOW IN ORDER LISTED . . . . FOR DETAILS, GO TO

8. Make necessary VT1.5/STS1 cross-connections at each node in the network.

   A. Single/Dual Homed OC-3 or OC-12/OC-1 Configuration **DLP-526**

   B. Stand Alone OC-3/OC-1 Ring Configuration **DLP-528**

   C. Single/Dual OC-48 or OC-192/OC-3 or OC-12 Ring Configuration **DLP-530**

   D. Single/Dual OC-12/OC-3 Ring Configuration **DLP-535**

---

9. **NOTE:**
   For a T1 circuit in a path protected ring network, the **`sw-path-( ):`***`address`* command must be used at the terminating nodes to switch the active VT1.5 (DS1) path to repeat this test on the other path(s).

   Perform DS1 end-to-end transmission test for each circuit being put into service.

---

10. Use the **`rtrv-state:`** command to determine the port state of the T1 port(s) of the circuit being established.

---

11. **NOTE:**
    If a port is in the *nmon (n)* state, the signal is not monitored or alarmed. The port will not automatically go to the *in service (i)* state when a signal is detected as it will in the *auto (a)* state. In the *nmon* state, the port must be returned to the *auto* state, using the **`set-state-t1:`** command, to turn on monitoring of signal failures and before any circuit packs associated with that port can be removed from the equipment list by the `upd` command.

    Use the **`set-state-t1:`** command to set the port state of the T1 port(s) of the circuit being established.

Discontinue End-to-End T1 Service

DO ITEMS BELOW IN ORDER LISTED . . . . FOR DETAILS, GO TO

1. **CAUTION:**
   DDM-2000 circuit packs contain static sensitive components which can be damaged by electrostatic discharge. A static ground wrist strap must be worn when handling the circuit packs. See electrostatic discharge considerations in **Trouble Clearing: TAD-100***.*

   NOTE:
   Standard T1 transmitter sources are designed to terminate in a nominal 100-ohm impedance. This termination is usually provided by the receiving equipment. When not connected to receiving equipment (that is, idle or unterminated), T1 transmitter equipment should terminate in a 100-ohm load. When connecting through DSX equipment, this can be accomplished with terminating plugs available from the DSX manufacturer. Any alternative method may be used resulting in 100-ohms across the TIP and RING of the T1 circuit output while in an idle state. Failure to terminate T1 outputs may result in violation of FCC Part 15 emission requirements and possibly interfere with other electronic equipment. Also, AIS should be turned off (using the **`set-t1:`***`address`***`:ais=no`** command) on any T1 circuit that is not in service.

   Determine which T1 ports are to be discontinued and verify no alarms exist on the system.

2. Notify maintenance center that alarms will be generated while performing this procedure.

DO ITEMS BELOW IN ORDER LISTED . . . . . FOR DETAILS, GO TO

3. **NOTE:**
   The following operation may activate the office major, minor, or no alarm. The audible alarm may be suppressed by depressing the **ACO** button.

   NOTE:
   One of the terminating nodes for the T1 service may be equipped with **STS1E** circuit packs to provide an EC-1 interface for the DS1 service.

   At the DS1 interconnect assembly, cross connect, or equivalent sssembly at the T1 terminating nodes, remove the T1 signals associated with the port(s) being discontinued. (**FAULT** LEDs begin flashing on **T1EXT** circuit pack with signals removed.)

4. **NOTE:**
   The **UPD/INIT** pushbutton on the **SYSCTL** is recessed to prevent its accidental operation. You will need a small pointed object such as a ball-point pen to operate it.

   Momentarily depress the **UPD/INIT** button on the **SYSCTL** at the DS1 terminating nodes or use the **`upd`** command to update the equipment list. (Flashing **FAULT** LEDs go off.)

5. Use the **`rtrv-state-eqpt:`** command to verify that the correct port(s) has been changed from *in-service (i)* to *auto (a)* state.

6. **CAUTION:**
   Removing the wrong cross-connections may cause service interruption.

   From work order or **`rtrv-crs-( )`** command, determine the cross-connections for circuit being discontinued.

DO ITEMS BELOW IN ORDER LISTED . . . . FOR DETAILS, GO TO

7. **NOTE:**
T1 LOW-SPEED slots cannot be unequipped without an alarm until all port cross-connections are removed. The cross-connections must be removed first before removing circuit packs. In a ring configuration, remove the cross-connections from the terminating nodes first, then remove the pass-through cross-connections at the intermediate nodes. A Major alarm may occur when the first cross-connection at the terminating node is deleted and clear when the other terminating cross-connection is deleted.

NOTE:
The following commands may be used to delete, enter, and retrieve cross-connections at the FiberReach shelf: **`dlt-crs-vt1`**, **`ent-crs-vt1`**, and **`rtrv-crs-vt1`**. See the "Commands and Reports" section of this manual for a description of commands. See "Cross-Connection Provisioning" in the "Administration and Provisioning" section of this manual for more information on cross-connections.

Use the **`dlt-crs-vt1:`** command to delete the terminating (drop) node cross-connections for all T1 service being removed, if required.

8. **NOTE:**
If other nodes in the T1 path being discontinued are not DDM-2000 FiberReach nodes, use the documentation for the other systems to delete the necessary cross-connections, if required.

Use the **`dlt-crs-vt1:`** command to delete the pass-through cross-connections at each nonterminating node for all DS1 service being removed, if required.

DO ITEMS BELOW IN ORDER LISTED . . . . . FOR DETAILS, GO TO

9. **NOTE:**
   If a port is in the *nmon (n)* state, the signal is not monitored or alarmed. The port will not automatically go to the *in service (i)* state when a signal is detected as it will in the *auto (a)* state. In the *nmon* state, the port must be returned to the auto state, using the **`set-state-t1:`** command, to turn on monitoring of signal failures and before any circuit packs associated with that port can be removed from the equipment list by the upd command.

   If circuit packs are going to be removed, use the **`rtrv-state-t1:/set-state-t1:`** command to verify/set the port state of the T1 ports to *auto*.

   If circuit packs are **not** going to be removed, use the **`set-state-t1:`** command to set the port state of the T1 port(s) to *auto* or *nmon*, as required.

10. If both T1 ports on the **T1EXT** circuit pack are being discontinued, you may remove the **T1EXT** circuit pack, if required.

11. If circuit packs have been removed, momentarily depress the **UPD/INIT** button on the **SYSCTL** or use the upd command to update the DDM-2000 internal equipment list.

12. If the FiberReach shelf is equipped for 1X7 protection mode and circuit packs have been removed, install **177A** Apparatus Blank cards into empty low speed slots.

13. Verify all alarms are off.

Establish DDM-2000 OC-3c (STS-3c) Service

DO ITEMS BELOW IN ORDER LISTED . . . . FOR DETAILS, GO TO

1. **WARNING:**
Unterminated optical connectors may emit invisible laser radiation. Eye damage may occur if beam is viewed directly or with improper optical instruments. Avoid direct exposure to the beam.

CAUTION:
DDM-2000 circuit packs contain static sensitive components which can be damaged by electrostatic discharge. A static ground wrist strap must be worn when handling the circuit packs. See electrostatic discharge considerations in ***Trouble Clearing: TAD-100****.*

NOTE:
It is assumed that the DDM-2000 FiberReach has been properly equipped and has passed the looped transmission test(s) [**System Turnup: NTP-007**]. It is also assumed that the end-to-end OC-3 or OC-12 optical spans have been established.

NOTE:
It is assumed that the DDM-2000 FiberReach shelf is colocated with the broadband terminal equipment which is connected to the **OLIU**s in the DDM-2000 FiberReach Function Units **FN-( )** slots.

NOTE:
Is is assumed that **28/29-Type OLIU**s are installed in the **MAIN** and **22-Type OLIU**s are installed in Function Units **FN-( )** slots for OC-3c service and that the **OLIU**s in Function Units **FN-( )** slots are looped back at the terminating ends. Low-Speed Group **LS-( )-( )** slots are not equipped when the DDM-2000 FiberReach shelf is equipped for OC-3c service.

DO ITEMS BELOW IN ORDER LISTED	FOR DETAILS, GO TO
Verify **22-Type OLIU** circuit packs are installed in Function Units **FN-( )** slots.	
2. Use the **`ent-crs-sts3c`**: command at each shelf to make the following STS3c cross-connections. For example, **`ent-crs-sts3c:m-1,f-1`** (**28-Type OLIU**) or **`ent-crs-sts3c:m-7,f-1`** (**29-Type OLIU**).	
3. Determine the optical loss of the OC-3c span from the DDM-2000 FiberReach to the broadband terminating equipment.	
4. Remove optical loops from **OLIU**s in Function Units **FN-( )** slots and the broadband terminating equipment.	
5. Install LBOs on the **22-Type OLIU**s in the Function Units **FN-( )** slots to agree with the loss of the optical span to the broadband terminating equipment.	
6. Reinstall OLIUs (if removed) and connect the optical cables from the DDM-2000 FiberReach to the broadband terminating equipment.	
7. Perform an OC-3c transmission test using a SONET test set, if required.	**DLP-517**

Establish Initial HDSL Service (Group Equipped But Not in Service)

DO ITEMS BELOW IN ORDER LISTED . . . . FOR DETAILS, GO TO

1. **CAUTION:**
DDM-2000 circuit packs contain static sensitive components which can be damaged by electrostatic discharge. A static ground wrist strap must be worn when handling the circuit packs. See electrostatic discharge considerations in ***Trouble Clearing: TAD-100****.*

NOTE:
The OC-3/OC-12 system must be established before continuing with this procedure. If all the nodes of the network have not been equipped and installed, refer to **System Turnup/Circuit Order: IXL-001** for procedures to equip the DDM-2000 shelves and establish the system.

NOTE:
If the DS1 terminating end(s) are in a DDM-2000 OC-3 shelf, this procedure assumes that **MXRVO** circuit packs have already been installed during initial shelf turnup and either **MXRVO** or **STS1E** circuit packs have been installed during initial shelf turnup at the other DDM-2000 OC-3/OC-12 terminating end(s) of the circuit. If the terminating end is in another system, it is assumed that the appropriate installation and connections have been made to that system.

NOTE:
If the DDM-2000 fails to respond in the indicated manner, refer to Trouble Clearing: IXL-001.

Verify that no LEDs or alarms are activated. If any LEDs or alarms are activated, refer to Trouble Clearing: IXL-001 and follow the appropriate trouble-clearing procedure.

DO ITEMS BELOW IN ORDER LISTED . . . . . FOR DETAILS, GO TO

2. **NOTE:**
   The **`rtrv-eqpt:`** command retrieves the `Equipage and Version Report`. This report lists the circuit pack type and version information for one or more slots. See the "Commands and Reports" section of this manual for a description of the **`rtrv-eqpt:`** command format.

   If a DDM-2000 OC-3 shelf is the terminating end, use the **`rtrv-eqpt:`** command to obtain the `Equipage and Version Report` and verify that the proper service and protection (if required) **MXRVO** (**STS1E**) circuit packs have been installed in group(s) (**FUNCTION UNITS A**, **B**, or **C**) being put into service.

3. At the HDSL terminating node(s) of the circuit being established, determine which HDSL port(s) is to be put into service and what options are to be selected.

4. At each HDSL terminating node, set option switches and install HDSL circuit pack(s), as required. **DLP-540**

5. **NOTE:**
   No DS1 slot locations should be left empty in Low-Speed Groups equipped with **HDSL** circuit packs.

   NOTE:
   When a **HDSL** circuit pack is switched to protection, removal of any other **HDSL** circuit pack or **177A** Retainer Card in the same Low-Speed Group will result in a loss of service to the protected **HDSL** and the removed **HDSL** circuit pack.

   NOTE:
   177A Retainer Cards are used to disconnect the cross-connect wiring associated with unused service DS1 slot locations from the DDM-2000's internal protection bus.

   Install **177A** Retainer Cards into all unused service **DS1** slots in Low-Speed Groups equipped with **HDSL** circuit packs.

6. At each HDSL terminating node, make the appropriate cable connection(s) to the HDSL cross-connect point(s) or equivalent connection point(s) for the circuit being added.

DO ITEMS BELOW IN ORDER LISTED . . . . FOR DETAILS, GO TO

7. Verify that no LEDs or alarms are activated. If any LEDs or alarms are activated, refer to **Trouble Clearing: IXL-001** and follow the appropriate trouble-clearing procedure.

8. If one of the terminating nodes is a DDM-2000 OC-3 shelf equipped with **STS1E** circuit packs for an EC-1 interface to support services being established, establish initial EC-1 low-speed interface [**NTP-034**] in 363-206-285, *DDM-2000 OC-3 Multiplexer, TARP Release 13 and Later, User/Service Manual (TOP) - Volume II*.

9. **NOTE:**
   Ring releases support only manual VT1.5 and STS-1 cross-connections. Manual STS-1 and/or DS1 cross-connections have to be made at each shelf to configure the transmission path for each circuit being established. Either terminating (drop) cross-connections or "drop and continue" cross- connections are made at terminating nodes and pass-through cross-connections are made at intermediate nodes.

   NOTE:
   In ring configurations, you should use the following rules in establishing cross-connections in each ring:

   1. All drop connections (including DRI, if present) from the same STS-1 timeslot must be provisioned the same, either all VT1.5 or STS-1.
   2. If all 28 VT1.5s (DS1s) in an STS-1 are being passed through at a node in a VT1.5 path-switched ring, then the cross- connection may be provisioned as either a pass-through STS-1 or VT1.5. However, if you anticipate dropping VT1.5s from the pass-through node in the future, you should provision the pass-throughs as VT1.5 cross-connections.
   3. On STS-1 path-switched rings, all nodes in the ring must be provisioned as STS-1 cross-connections.

DO ITEMS BELOW IN ORDER LISTED . . . . . FOR DETAILS, GO TO

NOTE:
The following commands may be used to convert, delete, enter, and retrieve cross-connections: **`dlt-crs-sts1`**, **`dlt-crs-vt1`**, **`ent-crs-sts1`**, **`ent-crs-vt1`**, **`rtrv-crs-sts1`**, and **`rtrv-crs-vt1`**. See the "Commands and Reports" section of this manual for a description of commands. See "Cross- Connection Provisioning" in the "Administration and Provisioning" section of this manual for more information on cross-connection provisioning.

Determine the necessary cross-connections for each node from the work order or circuit order.

10. Make necessary VT1.5/STS1 cross-connections at each node in the network:

A.	Single-Ring Configuration	**DLP-518**
B.	Single/Dual OC-3 or OC-12/OC-1 FiberReach Configuration	**DLP-526**
C.	Stand-Alone OC-3/OC-1 FiberReach Configuration	**DLP-528**
D.	Single/Dual OC-48 or OC-192/OC-3 or OC-12 FiberReach Configuration	**DLP-530**
E.	Single/Dual OC-12/OC-3 FiberReach Configuration	**DLP-535**
F.	Dual-Ring Interworking (DRI) Configuration in 363-206-285, *DDM-2000 OC-3 Multiplexer, TARP Release 13 and Later, User/Service Manual (TOP) - Volume II,* **DLP-550**.	

DO ITEMS BELOW IN ORDER LISTED . . . . FOR DETAILS, GO TO

11. **NOTE:**
For a DS1 circuit in a path protected ring network, the **`sw-path-( ):address`** command must be used at the terminating nodes [and dual ring interworking (DRI) nodes in a DRI ring network] to switch the active VT1.5 (DS1) path to repeat this test on the other path(s).

Perform DS1 end-to-end transmission test for each circuit being put into service, as required:

A. FiberReach Configurations **DLP-510**

B. Dual-Ring Interworking (DRI) Configuration in 363-206-285, *DDM-2000 OC-3 Multiplexer, TARP Release 13 and Later, User/Service Manual (TOP) - Volume II,* **DLP-554**.

12. Use the **`rtrv-state-eqpt:`** command to determine the port state of the DS1 port(s) of the circuit being established.

13. **NOTE:**
If a port is in the *nmon (n)* state, the signal is not monitored or alarmed. The port will not automatically go to the *in service (i)* state when a signal is detected as it will in the *auto (a)* state. In the nmon state, the port must be returned to the *auto* state, using the **`set-state-t1:`** command, to turn on monitoring of signal failures and before any circuit packs associated with that port can be removed from the equipment list by the upd command.

Use the **`set-state-t1:`** command to set the port state of the DS1 port(s) of the circuit being established.

14. Use PairGain procedures to access the faceplate RS-232 interface and set HDSL link management features for each port being provisioned.

Add New HDSL Service
(Group Already In Service)

DO ITEMS BELOW IN ORDER LISTED . . . . FOR DETAILS, GO TO

1. **CAUTION:**
DDM-2000 circuit packs contain static sensitive components which can be damaged by electrostatic discharge. A static ground wrist strap must be worn when handling the circuit packs. See electrostatic discharge considerations in **Trouble Clearing: TAD-100**.

NOTE:
This procedure assumes that the DDM-2000 FiberReach is in service and that a new **HDSL** port or HDSL circuit pack is being added to a Low-Speed Group that is already in service. It also assumes that **STS1E** circuit packs have been installed if the other end is an EC-1 interface. If proper circuit packs have not been installed and the system is in service on other groups, refer to **System Turnup/Circuit Order: IXL-001** in 363-206-285, *DDM-2000 OC-3 Multiplexer, TARP Release 13 and Later, User/Service Manual (TOP) - Volume II*, for procedures to add a new group (**MXRVO** or **STS1E**).

NOTE:
A maximum of three **BBF8 HDSL** circuit packs, including a protection circuit pack, can be installed in the LOW SPEED Group.

NOTE:
If the DDM-2000 fails to respond in the indicated manner, refer to **Trouble Clearing: IXL-001**.

Determine which HDSL ports/slots are to be put into service and what options are to be selected.

DO ITEMS BELOW IN ORDER LISTED . . . . . FOR DETAILS, GO TO

2. Verify that no LEDs or alarms are activated. If any LEDs or alarms are activated, refer to **Trouble Clearing: IXL-001** and follow the appropriate trouble-clearing procedure.

3. **CAUTION:**
   No service DS1 Low-Speed slots should be left empty in a group equipped with **HDSL** *circuit packs.*

   If a new **HDSL** circuit pack is being installed, remove **177A** Retainer Card from DS1 slot being equipped, then set option switches and install new **HDSL** circuit pack. **DLP-540**

4. At each HDSL terminating node, use the **`set-t1:`** command to set the characteristics of the DS1 port being established, if not already performed.

5. At each HDSL terminating node, make the appropriate cable connection(s) to the cross-connect point(s) or equivalent connection point(s) for the circuit(s) being added.

6. Verify that no LEDs or alarms are activated. If any LEDs or alarms are activated, refer to **Trouble Clearing: IXL-001** and follow the appropriate trouble-clearing procedure.

7. **NOTE:**
   Ring releases support only manual VT1.5 and STS-1 cross-connections. Manual STS-1 and/or DS1 cross-connections have to be made at each shelf to configure the transmission path for each DS1 circuit being established. Either terminating (drop) cross-connections or "drop and continue" cross-connections are made at terminating nodes and pass- through cross-connections are made at intermediate nodes.

DO ITEMS BELOW IN ORDER LISTED . . . . FOR DETAILS, GO TO

NOTE:
In ring configurations, you should use the following rules in establishing cross-connections in each ring:

1. All drop connections (including DRI, if present) from the same STS-1 timeslot must be provisioned the same, either all VT1.5 or STS-1.
2. If all 28 VT1.5s (DS1s) in an STS-1 are being passed through at a node in a VT1.5 path-switched ring, then the cross-connection may be provisioned as either a pass-through STS-1 or VT1.5. However, if you anticipate dropping VT1.5s from the pass-through node in the future, you should provision the pass-throughs as VT1.5 cross-connections.
3. On STS-1 path-switched rings, all nodes in the ring must be provisioned as STS-1 cross-connections.

NOTE:
The following commands may be used to convert, delete, enter, and retrieve cross-connections: **`dlt-crs-sts1`**, **`dlt-crs-vt1`**, **`ent-crs-sts1`**, **`ent-crs-vt1`**, **`rtrv-crs-sts1`**, and **`rtrv-crs-vt1`**. See the "Commands and Reports" section of this manual for a description of commands. See "Cross-Connection Provisioning" in the "Administration and Provisioning" section of this manual for more information on cross-connection provisioning.

Determine the necessary cross-connections for each node from the work order or circuit order.

DO ITEMS BELOW IN ORDER LISTED . . . . . FOR DETAILS, GO TO

8. Make necessary VT1.5/STS1 cross-connections at each node in the network:

   A. Single-Ring Configuration **DLP-518**
   B. Single/Dual OC-3 or OC-12/OC-1 FiberReach Configuration **DLP-526**
   C. Stand-Alone OC-3/OC-1 FiberReach Configuration **DLP-528**
   D. Single/Dual OC-48 or OC-192/OC-3 or OC-12 FiberReach Configuration **DLP-530**
   E. Single/Dual OC-12/OC-3 FiberReach Configuration **DLP-535**

   F. Dual-Ring Interworking (DRI) Configuration in 363-206-285, *DDM-2000 OC-3 Multiplexer, TARP Release 13 and Later, User/Service Manual (TOP) - Volume II,* **DLP-550**.

---

9. **NOTE:**
   For a DS1 circuit in a path protected ring network, the **`sw-path-( ):address`** command must be used at the terminating nodes [and dual ring interworking (DRI) nodes in a DRI ring network] to switch the active VT1.5 (DS1) path to repeat this test on the other path(s).

   Perform DS1 end-to-end transmission test for each circuit being put into service, as required:

   A. FiberReach Configurations **DLP-510**

   B. Dual-Ring Interworking (DRI) Configuration in 363-206-285, *DDM-2000 OC-3 Multiplexer, TARP Release 13 and Later, User/Service Manual (TOP) - Volume II*, **DLP-554**.

---

10. Use the **`rtrv-state-eqpt:`** command to determine the port state of the DS1 port(s) of the circuit being established.

DO ITEMS BELOW IN ORDER LISTED . . . . FOR DETAILS, GO TO

11. **NOTE:**
    If a port is in the *nmon(n)* state, the signal is not monitored or alarmed. The port will not automatically go to the *in service(i)* state when a signal is detected as it will in the *auto(a)* state. In the *nmon* state, the port must be returned to the *auto* state, using the **`set-state-t1:`** command, to turn on monitoring of signal failures and before any circuit packs associated with that port can be removed from the equipment list by the upd command.

    Use the **`set-state-t1:`** command to set the port state of the DS1 port(s) of the circuit being established.

12. Use PairGain Technologies procedures to access the faceplate RS-232 interface and set HDSL link management features for each port being provisioned.

Discontinue End-to-End HDSL Service

DO ITEMS BELOW IN ORDER LISTED . . . . FOR DETAILS, GO TO

1. **CAUTION:**
   DDM-2000 circuit packs contain static sensitive components which can be damaged by electrostatic discharge. A static ground wrist strap must be worn when handling the circuit packs. See electrostatic discharge considerations in **Trouble Clearing: TAD-100***.*

   Determine which HDSL ports are to be discontinued and verify no alarms exist on the system.

2. **NOTE:**
   The following operation may activate the office major, minor, or no alarm. The audible alarm may be suppressed by depressing the **ACO** button.

   At the cross-connect point for the HDSL terminating nodes, remove the HDSL signals associated with the port(s) being discontinued. (**FAULT** LEDs begin flashing on **HDSL** circuit pack with signals removed.)

3. **NOTE:**
   The **UPD/INIT** pushbutton on the **SYSCTL** is recessed to prevent its accidental operation. You will need a small pointed object, such as a ball-point pen, to operate it.

   Momentarily depress the **UPD/INIT** button on the **SYSCTL** at the HDSL terminating nodes or use the upd command to update the equipment list. (Flashing **FAULT** LEDs go off.)

4. Use the **`rtrv-state-eqpt:`** command to verify that the right port has been changed from *in-service*(i) to *auto*(a) state.

DO ITEMS BELOW IN ORDER LISTED . . . . FOR DETAILS, GO TO

5. **CAUTION:**
Removing the wrong cross-connection may cause service interruption. Use the **`rtrv-crs-( )`** *command to determine the proper cross-connections.*

From work order or **`rtrv-crs-( )`** command, determine the DS1 (VT1.5) cross-connections for circuit being discontinued.

---

6. **NOTE:**
DS1 LOW SPEED slots cannot be unequipped without an alarm until all port cross-connections are removed. The cross-connections must be removed first before removing circuit packs. In a ring configuration, remove the cross-connections from the terminating nodes first, then remove the pass-through cross-connections at the intermediate nodes. A Major alarm may occur when the first cross-connection at the terminating node is deleted and clear when the other terminating cross-connection is deleted.

NOTE:
In ring configurations, the following rules are used in establishing cross-connections in each ring:

1. All drop connections (including DRI, if present) from the same STS-1 timeslot must be provisioned the same, either all VT1.5 or STS-1.
2. If all 28 VT1.5s (DS1s) in an STS-1 are being passed through at a node in a VT1.5 path-switched ring, then the cross-connection may be provisioned as either a pass-through STS-1 or VT1.5. However, if you anticipate dropping VT1.5s from the pass-through node in the future, you should provision the pass-throughs as VT1.5 cross-connections.
3. On STS-1 path-switched rings, all nodes in the ring must be provisioned as STS-1 cross-connections.

DO ITEMS BELOW IN ORDER LISTED . . . . .FOR DETAILS, GO TO

NOTE:
The following commands may be used to convert, delete, enter, and retrieve cross-connections: **`dlt-crs-vt1`**, **`dlt-crs-sts1`**, **`ent-crs-vt1`**, **`ent-crs-sts1`**, **`rtrv-crs-vt1`**, and **`rtrv-crs-sts1`**. See the "Commands and Reports" section of this manual for a description of commands. See "Cross-Connection Provisioning" in the "Administration and Provisioning" section of this manual for more information on cross-connections.

Use the **`dlt-crs-vt1:`** command to delete the terminating (drop) node cross-connections for all HDSL service being removed, if required.

---

7. Use the **`dlt-crs-vt1:`** command to delete the pass-through cross-connections at each nonterminating node for all DS1/HDSL service being removed, if required.

---

8. If both HDSL ports on the **HDSL** circuit pack are being discontinued, you may remove the **HDSL** circuit pack, if required.

---

9. If *all* **HDSL** circuit packs in the Low Speed Group are removed, you may remove the protection **HDSL** circuit pack, if required.

---

10. **CAUTION:**
No service DS1 Low Speed *slots should be left empty in groups equipped with protection* **HDSL** *circuit packs.*

NOTE:
177A Retainer Cards are used to disconnect the cross-connect wiring associated with unused service DS1 slot locations from the DDM-2000's internal protection bus.

Install **177A** Retainer Card(s), as required, into the DS1 slot(s) for the **HDSL** circuit pack(s) removed.

DO ITEMS BELOW IN ORDER LISTED . . . . . FOR DETAILS, GO TO

11. **NOTE:**
    If a port is in the *nmon(n)* state, the signal is not monitored or alarmed. The port will not automatically go to the *in service(i)* state when a signal is detected as it will in the *auto(a)* state. In the *nmon* state, the port must be returned to the *auto* state, using the **`set-state-t1:`** command, to turn on monitoring of signal failures and before any circuit packs associated with that port can be removed from the equipment list by the upd command.

    If circuit packs have been removed, momentarily depress the **UPD/INIT** button on the **SYSCTL** or use the upd command to update the DDM-2000 internal equipment list.

    If circuit packs have *not* been removed, use the **`set-state-t1:`** command to set the port state of the DS1 port(s) to *auto* or *nmon*, as required.

12. Verify all alarms are off.

Establish Single-Homed FiberReach OC-3 Access via DDM-2000 OC-12 Backbone Ring

DO ITEMS BELOW IN ORDER LISTED . . . . FOR DETAILS, GO TO

1. **WARNING:**
Unterminated optical connectors may emit invisible laser radiation. Avoid direct exposure to the beam. Do not view beam with optical instruments. Use of controls or adjustments or performance of procedures other than those specified herein may result in hazardous radiation exposure.

CAUTION:
DDM-2000 circuit packs contain static sensitive components which can be damaged by electrostatic discharge. A static ground wrist strap must be worn when handling the circuit packs. See electrostatic discharge considerations in **Trouble Clearing: TAD-100**.

NOTE:
FiberReach nodes operating at an OC-3 rate require two **28-Type OLIU**s in the **MAIN** slots of the FiberReach shelf.

NOTE:
The **28-Type OLIU**s require a faceplate interconnect cable assembly, [comcode(847721271].

NOTE:
If the DDM-2000 fails to respond in the indicated manner, refer to **Trouble Clearing: IXL-001**.

DO ITEMS BELOW IN ORDER LISTED . . . . . FOR DETAILS, GO TO

NOTE:
It is assumed that all DDM-2000 OC-12 shelves in the system have passed the looped transmission test(s) (363-206-295, *DDM-2000 OC-12 Multiplexer,TARP Release 7, User/Service Manual (TOP) - Volume II*, **System Turnup: NTP-002** or 363-206-285, *DDM-2000 OC-3 Multiplexer,TARP Release 13 and Later, User/Service Manual (TOP) - Volume II*, **System Turnup: NTP-016**) and the DDM-2000 OC-12 ring has been established (363-206-295, *DDM-2000 OC-12 Multiplexer, TARP Release 7, User/Service Manual (TOP) - Volume II*, **System Turnup: NTP-020** or 363-206-285, *DDM-2000 OC-3 Multiplexer,TARP Release 13 and Later, User/Service Manual (TOP) - Volume II*, **System Turnup: NTP-022**). It is also assumed the DDM-2000 FiberReach shelves have been equipped and tested, **System Turnup: NTP-007**.

Determine the network configuration (for example, see Figure 1).

2. Verify that the DDM-2000 OC-12 host shelf is equipped with TARP Release 7 or 13/15 ring software. If not equipped with TARP Release 7 or 13/15 software, upgrade the DDM-2000 OC-12 host shelf with proper software. Verify that the DDM-2000 FiberReach hosted shelf is equipped with TARP Release 3 or 4 ring software. **DLP-531**

3. Determine the optical loss of each optical span from office records or by making the required measurements. **DLP-514**

4. **NOTE:**
The **`rtrv-eqpt:`** command retrieves the `Equipage and Version Report`. This report lists the circuit pack type and version information for one or more slots. See the "Commands and Reports" section of this manual for a description of the **`rtrv-eqpt:`** command format.

DO ITEMS BELOW IN ORDER LISTED . . . . FOR DETAILS, GO TO

NOTE:
If work order or office records do not specify **OLIU** types, refer to 363-206-200, *DDM-2000 OC-3 and OC-12 Multiplexers, Applications, Planning, and Ordering Guide* and/or this manual, for a description of **OLIU** circuit packs and applications. Optical line power measurements and/or office records must be used to verify that the span length can be supported.

At the host OC-12 node, verify/install **OLIU** circuit packs in **FUNCTION UNITS** (**A**, **B**, **C**, or **D**) slots being used for OC-3 access.

---

5. **NOTE:**
If fecom is enabled, an `inconsistent DCC values` alarm will occur when the **OLIUs** are looped back. Normally, the alarm occurs when the user/network parameters at both ends of the DCC are set the same. To clear the alarm during a fiber loopback, use the **`set-fecom:`***address:***`com=disable`** command to disable the DCC.

   At OC-12 shelf, connect optical loops for **FUNCTION UNITS OLIUs** just installed.

---

6. **NOTE:**
The Network Side (NS)/User Side (US) parameters of the **`set-fecom:`** command must be set opposite at each end of the optical spans. For example, see Figure 2.

   Use the **`rtrv-fecom/set-fecom`** command to verify/set "Network Side/User Side" parameters at each end of optical span being established.

---

7. What Release of software is installed in the OC-12 host shelf?
   If Release 7 or 15 software is installed, continue with Step 8.
   If Release 13 software is installed, proceed to Step 9.

DO ITEMS BELOW IN ORDER LISTED. . . . .FOR DETAILS, GO TO

8. Use the **`rtrv-oc3/set-oc3`** command at the OC-12 host shelf to verify/set application (*app*) parameter for the OC-12 **FUNCTION UNITS** slots being used for this single-homed configuration. For example, **`set-oc3:fn-a,app=0X1`**.

9. What Release of software is installed in the FiberReach OC-3 hosted shelf?
   If Release 4 software is installed, continue with Step 10.
   If Release 3 software is installed, proceed to Step 11.

10. Use the **`rtrv-oc3/set-oc3`** command at the remote FiberReach OC-3 shelf to verify/set application (*dcc*) parameter for the OC-3 **MAIN** slots being used for this single-homed OC-3. For example,
    `set-oc3:main-1,dcc=`*`distinct`* and
    `set-oc3:main-2,dcc=`*`distinct`*.

11. Use the **`set-sync:`** command to provision the synchronization mode switching, synchronization source, and output mode of timing signals when the **28-Type OLIU**s hardware is provisioned to be line-timed. See the "Commands and Reports" section of this manual for a description of the **`set-sync:`** command format.

12. **NOTE:**
    If line timing mode is specified or external timing mode is specified but the timing reference was not available at the OC-12 shelf turnup, the **TGS/TG3** option switches are probably set for *free running*. Before this configuration is established, the specified timing mode must be set on the **TGS/TG3** circuit packs.

    NOTE:
    If the option switch setting is changed, an update must be done by momentarily depressing the **UPD/INIT** button on the **SYSCTL** after the **TGS/TG3** circuit packs are reinstalled.

DO ITEMS BELOW IN ORDER LISTED . . . . FOR DETAILS, GO TO

NOTE:
If external timing is selected and the **NE ACTY** LED remains lighted after the **TGS/TG3** circuit pack is reinserted, use the CIT and the **`rtrv-sync:`** command to check the operational mode of the system. If the mode is `Holdover` instead of `External`, check that the incoming timing references are connected. Also check `Mode Switching` (revertive or nonrevertive) and the external `DS1 Line Code/Format` switch settings.

Set timing mode on OC-12 **TGS/TG3** circuit packs to the timing mode specified in work order or office records. (363-206-295, *DDM-2000 OC-12 Multiplexer, TARP Release 7, User/Service Manual (TOP) - Volume II*, **DLP- 510** or 363-206-285, *DDM-2000 OC-3 Multiplexer, TARP Release 13 and Later, User/Service Manual (TOP) - Volume II*, **DLP- 513**)

---

13. **NOTE:**
If Kbyte or Sbyte (sync messaging) is enabled for the OC-3 **MAIN-1** and **MAIN-2** optical interfaces at any node in the OC-3 ring, it **must** be enabled at all nodes in the OC-3 ring and in the **FUNCTION UNITS** slots of the host OC-12 shelf.

NOTE:
The **`rtrv-oc3:`** command retrieves the `OC-3 Line Provisioning Report`. This report displays the provisioned configuration of OC-3 lines. See the "Commands and Reports" section of 363-206-295, *DDM-2000 OC-12 Multiplexer, TARP Release 7, User/Service Manual - Volume I,* 363-206-285, *DDM-2000 OC-3 Multiplexer, TARP Release 13 and Later, User/Service Manual - Volume I,* and this manual, for a description of the **`rtrv-oc3:`** command format.

Use the **`rtrv-oc3:`** command to obtain the `OC-3 Line Provisioning Report` and verify if Kbyte/Sbyte is enabled. Use the **`set-oc3:`** command to enable the Kbyte/Sbyte parameter, if required.

DO ITEMS BELOW IN ORDER LISTED. . . . . FOR DETAILS, GO TO

14. **NOTE:**
If Sync Autoreconfiguration is enabled, Kbyte/Sbyte must also be enabled.

NOTE:
The **`rtrv-sync:`** command retrieves the `Synchronization Report`. This report displays the provisioning and operational information on the synchronization attributes of the DDM-2000. See the "Commands and Reports" section of 363-206-295, *DDM-2000 OC-12 Multiplexer, TARP Release 7, User/Service Manual - Volume I,* 363-206-285, *DDM-2000 OC-3 Multiplexer, TARP Release 13 and Later, User/Service Manual - Volume I,* and this manual, for a description of the **`rtrv-sync:`** command format.

Use the **`rtrv-sync:`** command to obtain the `Synchronization Report` and verify if Sync Autoreconfiguration is enabled. Use the **`set-sync:`** command to enable the Sync Autoreconfiguration parameter, if required.

15. Verify no duplicate TID settings exist. The **`rtrv-ne:`** command may be used at each shelf in the network to display settings. If duplicates exist, determine new settings and use the **`set-ne:`** command to make new settings.

DO ITEMS BELOW IN ORDER LISTED . . . . FOR DETAILS, GO TO

16. **NOTE:**
OC-12 host shelves with Release 15 and FiberReach OC-3 hosted shelves with Release 4 software support AGNE(s) and alarm groups. OC-12 host shelves with Release 7 or 13 and FiberReach hosted shelves with Release 3 software do **not** support these features and will **not** appear in the alarm groups of a network with mixed software.

NOTE:
The Remote NE Status (**`rnestat`**) parameter of the **`set-ne:`** command must be enabled prior to designating the AGNE(s) and alarm group numbers.

NOTE:
Shelves may be designated as an alarm gateway network element (AGNE) and assigned an alarm group number. (Default alarm group number is 255.) At least one AGNE is required per alarm group. One primary AGNE and one backup per alarm group is recommmended. For a network greater than 16 nodes, the AGNE and TL1 GNE should be on separate nodes. The AGNE parameter of the **`set-ne:`** command may have been set to yes on each new shelf during shelf turnup procedures to suppress an `AGNE communication failure` alarm.

Use the **`set-ne:`** command to designate the AGNE(s) and alarm group numbers, as required.

DO ITEMS BELOW IN ORDER LISTED. . . . . FOR DETAILS, GO TO

17. **NOTE:**
Only **one** remote FiberReach OC-3 shelf is allowed in this single-homed configuration.

NOTE:
A single-homed ring configuration requires that the **FUNCTION UNITS ( ) 1 OLIU** on the OC-12 shelf connect to the **MAIN-1 OLIU** at the FiberReach OC-3 shelf. The **MAIN-2 OLIU** at the FiberReach shelf on the OC-3 ring connects to **FUNCTION UNITS ( ) 2(P) OLIU** on the host OC-12 shelf. See Figure 1. This procedure will establish the ring configuration starting from the OC-12 host node to the FiberReach OC-3 node, then from the FiberReach OC-3 node back to the host OC-12 node.

At the near end, remove the optical loop from the **OLIU** (for example in Figure 1, Node 5 OC-12 shelf **FUNCTION UNITS A 1**) associated with the optical span being established. At the other end of the optical span, remove the optical loop from the associated **28-Type OLIU** (for example, in Figure 1, Node 7 FiberReach shelf **MAIN-1 OLIU**).

---

18. **NOTE:**
The section data communication channel (DCC), used for far end communications, must be enabled at each network element (shelf) optical interface being tested in order for the end-to-end line tests to work. Default condition for the DCC channel is "enabled". If it has been disabled, use the **`set-fecom:`** command **at each shelf** to enable far end communications.

At each shelf, use the **`set-fecom:`***`address`***`:com=enabled`** command to ensure far end communications (fecom) is enabled.

DO ITEMS BELOW IN ORDER LISTED . . . . FOR DETAILS, GO TO

19. **NOTE:**
Shelves that are part of a subnetwork being partitioned into multiple areas require that the NSAP*AREA* field and level 2 IS-IS routing parameters of the **`ent-ulsdcc-l3`** command be set. See Section 11 “Commands and Reports” in 363-206-295, *DDM-2000 OC-12 Multiplexer, TARP Release 7, User/Service Manual - Volume I*, 363-206-285, *DDM-2000 OC-3 Multiplexer, TARP Release 13 and Later, User/Service Manual - Volume I* , and this manual, for an explanation of the command parameters and 824-102-144, *Lucent Technologies 2000 Product Family, Operations Interworking Guide for TARP Releases*, for an explanation of the engineering rules for subnetworking partitioning.

Use the **`ent-ulsdcc-l3`** command to designate the NSAP*AREA* field and level 2 IS-IS routing, as required.

20. Perform optical fiber connections and verification of the integrity of the optical span being established. **DLP-514**

21. **NOTE:**
The **`rtrv-pm-line:`** command in the following procedure displays performance monitoring data associated with the OC-3 lines terminated on the system.

Perform end-to-end OC-3 line test. **DLP-515**

22. Repeat this procedure for all OC-3 optical spans being established in the DDM-2000 OC-12/OC-3 network. Ensure that the last optical span connected to the OC-12 host shelf is connected to an **OLIU** in the opposite slot as the one in the first OC-3 span (for example, slot **1** for the first span and slot **2(P)** for the second span).

DO ITEMS BELOW IN ORDER LISTED . . . . . FOR DETAILS, GO TO

23. **NOTE:**
Establishing service requires that the proper slots in each terminating node be properly equipped with the correct circuit pack(s) for the type of service being established. It also requires numerous cross connections in each of the nodes representing the path of the required service. Additionally, transmission tests should be performed to verify the continuity and quality of the established circuit.

The single-homed DDM-2000 FiberReach access network is now ready for initial service to be established.
Initial DS1 Service [**System Turnup: NTP-004**]
Initial T1 Service [**System Turnup: NTP-013**]
Initial HDSL Service [**System Turnup: NTP-017**]
Initial DS3 Service [**System Turnup: NTP-025**]
STS-3c Service [**System Turnup: NTP-016**]

.

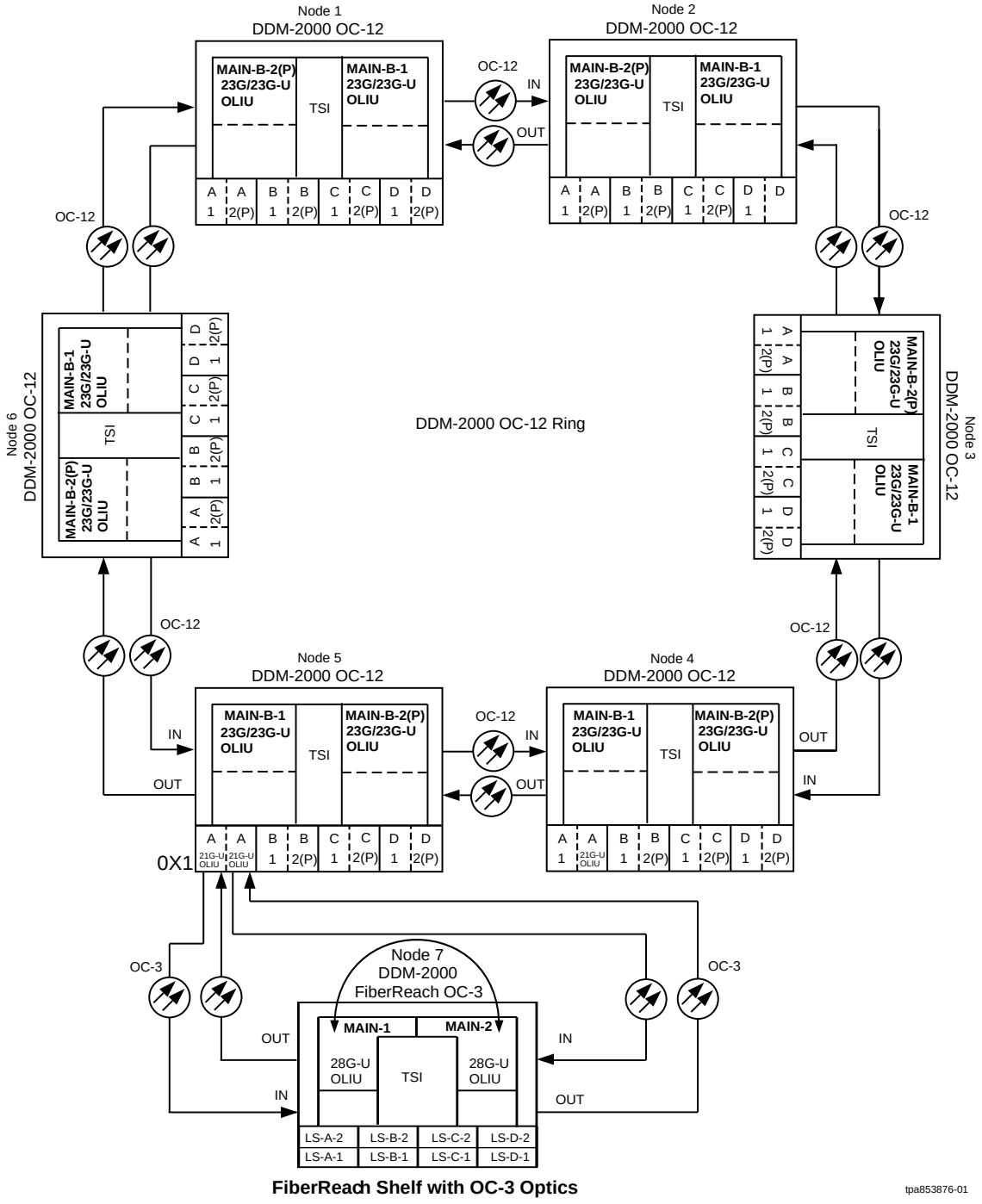

Figure 1 – Example OC-3 Single-Home Ring Configuration Connections

DDM-2000 OC-12 DCC Network Side (NS)/User Side (US) Defaults (set-fecom:nsus=ns/us)								
21-Type OLIUs (0X1, 1+1 or video)	**FN-A-1** dcc-a1	**FN-A-2** dcc-a2	**FN-B-1** dcc-b1	**FN-B-2** dcc-b2	**FN-C-1** dcc-c1	**FN-C-2** dcc-c2	**FN-D-1** dcc-d1	**FN-D-2** dcc-d2
	NS	US	NS	US	NS	US	NS	US
23-Type OLIUs	**MAIN-B-1** dcc-mb1		**MAIN-B-2(P)** dcc-mb2					
	US		NS					

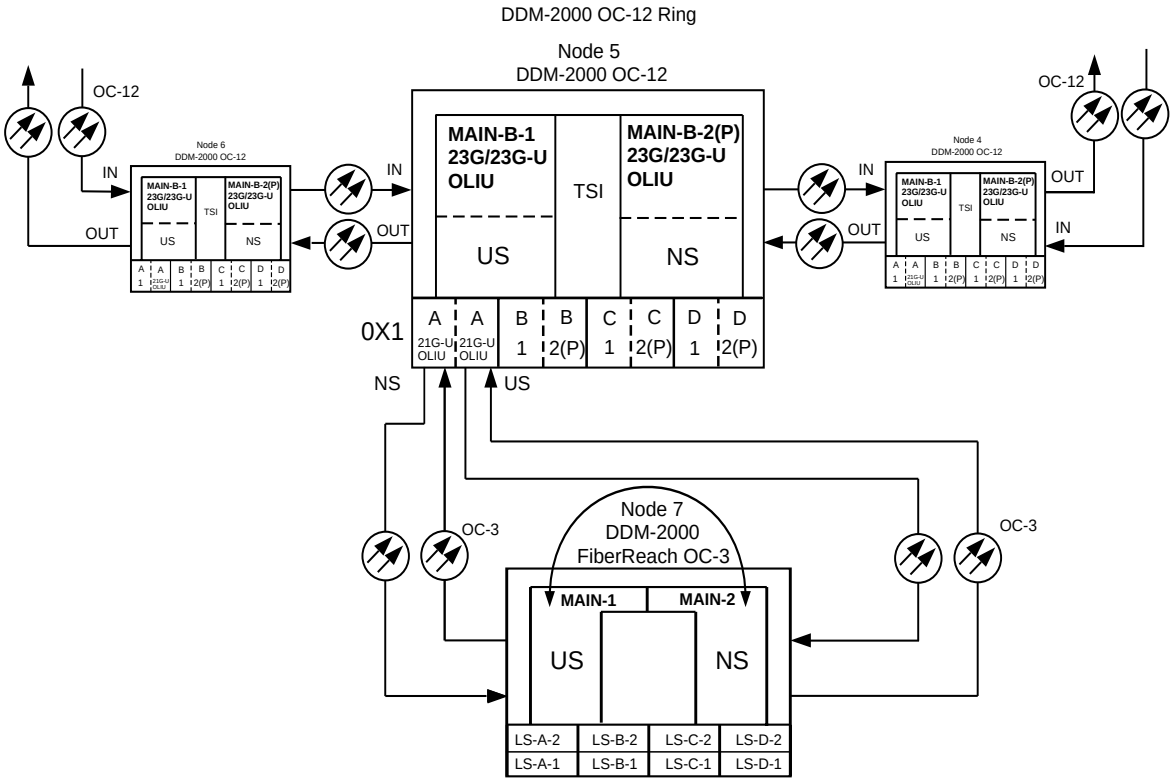

FiberReach Shelf with OC-3 Optics

DDM-2000 FiberReach OC-3 DCC Network Side (NS)/User Side (US) Defaults (set-fecom:nsus=ns/us)		
28-Type OLIUs	**MAIN-1** dcc-m1	**MAIN-2** dcc-m2
	US	NS

tpa853877-01

Figure 2 – Example of User Side/Network Side Value Settings

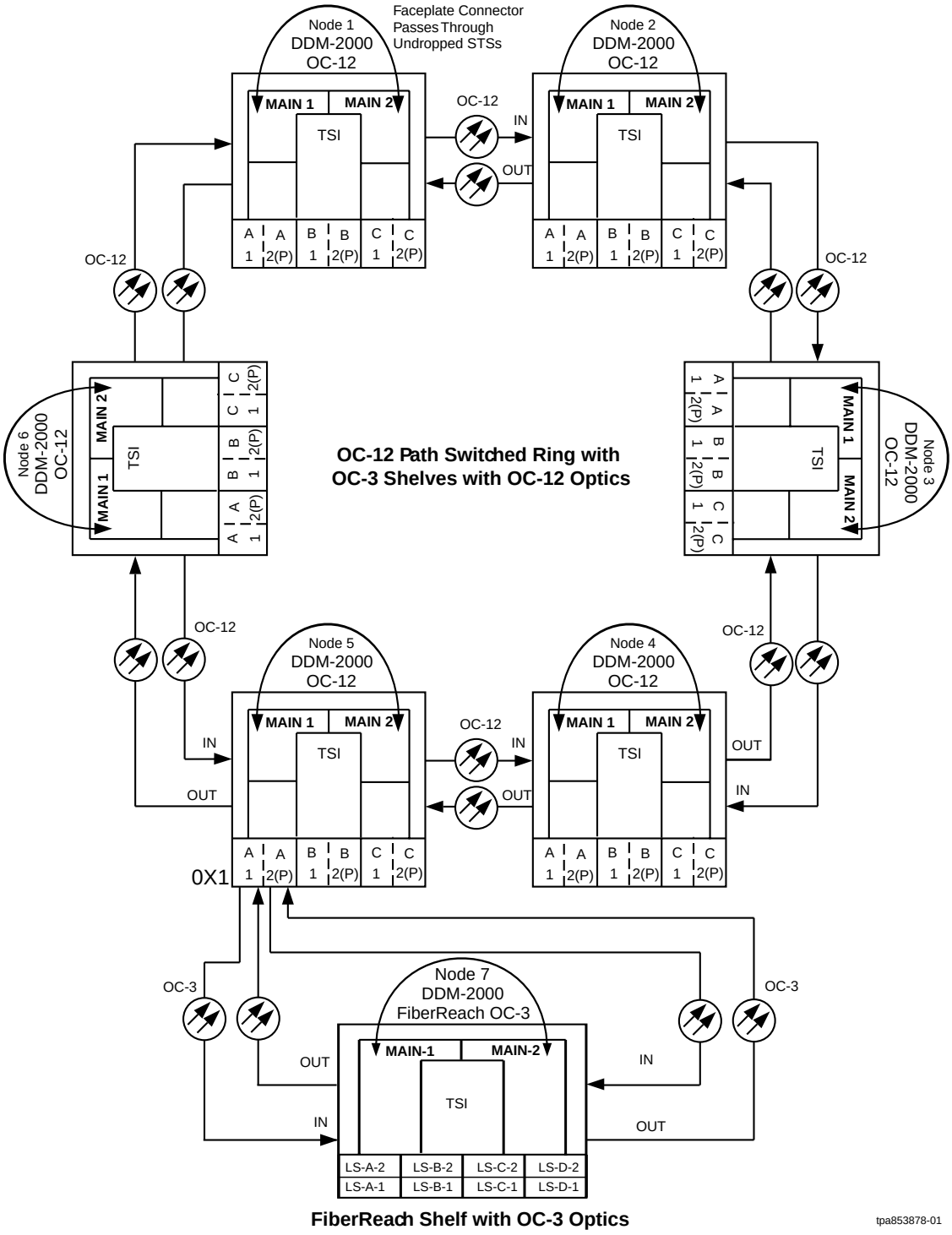

Figure 3 – Example of OC-3 Single-Home Ring Configuration Connections

DDM-2000 OC-12 DCC Network Side (NS)/User Side (US) Defaults (set-fecom:nsus=ns/us)						
22-Type OLIUs (0X1 or 1+1)	**FN-A-1** dcc-a1	**FN-A-2** dcc-a2	**FN-B-1** dcc-b1	**FN-B-2** dcc-b2	**FN-C-1** dcc-c1	**FN-C-2** dcc-c2
	NS	US	NS	US	NS	US
29-Type OLIUs	**MAIN-1** dcc-m1	**MAIN-2** dcc-m2				
	US	NS				

OC-12 Path Switched Ring with OC-3 Shelves with OC-12 Optics

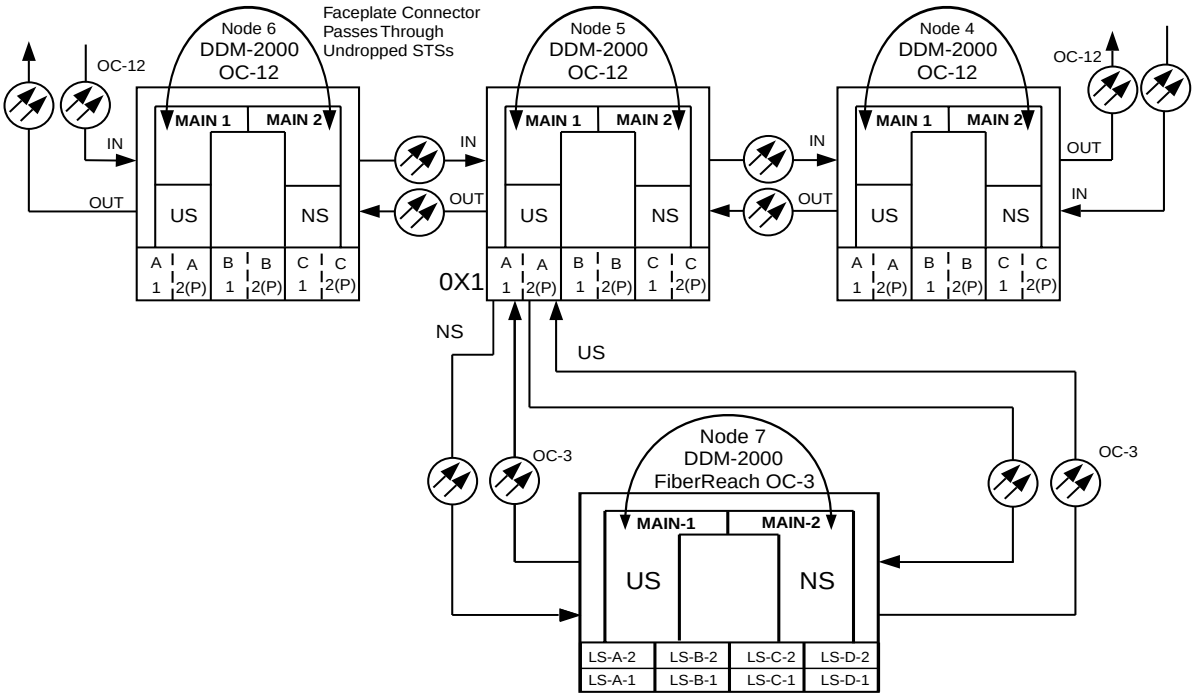

FiberReach Shelf with OC-3 Optics

DDM-2000 FiberReach OC-3 DCC Network Side (NS)/User Side (US) Defaults (set-fecom:nsus=ns/us)		
28-Type OLIUs	**MAIN-1** dcc-m1	**MAIN-2** dcc-m2
	US	NS

tpa853879-01

Figure 4 – Example of User Side/Network Side Value Settings

Establish Single-Homed FiberReach OC-3 or OC-12 Access via FT-2000 OC-48 Backbone Ring

DO ITEMS BELOW IN ORDER LISTED . . . . FOR DETAILS, GO TO

1. **WARNING:**
Unterminated optical connectors may emit invisible laser radiation. Avoid direct exposure to the beam. Do not view beam with optical instruments. Use of controls or adjustments or performance of procedures other than those specified herein may result in hazardous radiation exposure.

CAUTION:
DDM-2000 circuit packs contain static sensitive components which can be damaged by electrostatic discharge. A static ground wrist strap must be worn when handling the circuit packs. See electrostatic discharge considerations in **Trouble Clearing: TAD-100***.*

NOTE:
FiberReach nodes operating at an OC-3 rate require two **28-Type OLIU**s in the **MAIN** slots of the FiberReach shelf.

NOTE:
FiberReach nodes operating at an OC-12 rate require two **29-Type OLIU**s in the **MAIN** slots of the FiberReach shelf.

NOTE:
The **28-Type** and **29-Type OLIU**s require a faceplate interconnect cable assembly, [comcode 847721271].

NOTE:
If the DDM-2000 fails to respond in the indicated manner, refer to **Trouble Clearing: IXL-001**.

NOTE:
It is assumed that the FT-2000 in the system have passed local tests and the FT-2000 ring has been established. It is also assumed the DDM-2000 FiberReach shelves have been equipped and tested [**System Turnup: NTP-007**].

DO ITEMS BELOW IN ORDER LISTED . . . . . FOR DETAILS, GO TO

NOTE:
This procedure is used to establish a single-homed DDM-2000 FiberReach OC-3/ OC-12 ring connection to an FT-2000 ring (See Figure 1). Other configurations may have to be established to obtain your final configuration. See **NTP-022** for dual-homed configurations from the FT-2000 low speed interface (**LS INTFC**) ports.

Determine the network configuration (for example, see Figure 1).

2. Verify that the host FT-2000 OC-48 shelf is equipped with TARP Release 8.1 or later ring software. If not equipped with TARP Release 8.1 or later software, upgrade the FT-2000 OC-48 host shelf with proper software. Verify that the DDM-2000 FiberReach shelves are equipped with TARP Release 3 (OC-3) or Release 4 (OC-3 or OC-12) ring software.

3. Determine the optical loss of each optical span from office records or by making the required measurements.

4. At FT-2000, verify/provision the FT-2000 low speed OC-3/OC-12 slots Protection Mode (from OC-3/OC-12) Parameter to "*0X1*" (See **`CONFIGURATION-Set-OC3`** or **`CONFIGURATION-Set-OC12`** command in 365-575-103, *FT-2000 OC-48 Lightwave System, Release 8.1 Through 9.1, User/Service Manual)*.

5. At FT-2000 shelf, verify/assign DCC channels to FT-2000 low speed OC-3/OC-12 slots. (See **`CONFIGURATION-Enter-Assignment-DCC`** command in 365-575-103, *FT-2000 OC-48 Lightwave System, Release 8.1 Through 9.1, User/Service Manual)*.

DO ITEMS BELOW IN ORDER LISTED . . . . FOR DETAILS, GO TO

6. **NOTE:**
   FAULT LEDs will not go off until fibers are connected to the DDM.

   Add OC-3/IS-3 Low Speed Circuit Pack(s), NTP-010 or **Add OC-12 Low Speed Circuit Pack(s), NTP-012** at the host FT-2000 shelves. (365-575-103, *FT-2000 OC-48 Lightwave System, Release 8.1 Through 9.1, User/Service Manual)*.

7. What Release of software is installed in the FiberReach shelf?
   If Release 4 software is installed, continue with Step 8.
   If Release 3 software is installed, proceed to Step 9.

8. Use the **`rtrv-oc3/set-oc3`** or **`rtrv-oc12/set-oc12`** command at the remote DDM-2000 FiberReach shelf to verify/set application (*dcc*) parameter for the OC-3/OC-12 **MAIN** slots being used for this OC-3/OC-12 single-homed configuration. For example,
   `set-oc3:main-1,dcc=`*`distinct`* and
   `set-oc3:main-2,dcc=`*`distinct`* or
   `set-oc12:main-1,dcc=`*`distinct`* and
   `set-oc12:main-2,dcc=`*`distinct`*.

9. **NOTE:**
   This procedure will establish the OC-3/OC-12 ring configuration starting from the FT-2000 host node to the OC-3/OC-12 node, then from the OC-3/OC-12 node back to the host FT-2000 node.

   NOTE:
   The Network Side (NS)/User Side (US) parameters of the OC-3/OC-12 **`set-fecom:`** command and the FT-2000 DCC orientation must be set opposite at each end of the optical spans. For example, see Figures 2 and 3.

   Use the **`rtrv-fecom/set-fecom`** command at the DDM-2000 FiberReach or the **`CONFIGURATION-Enter-Assignment-DCC`** command at the FT-2000 to verify/set "Network Side/User Side" parameters at each end of all optical spans being established.

DO ITEMS BELOW IN ORDER LISTED . . . . . FOR DETAILS, GO TO

10. Use the **`set-sync:`** command to provision the synchronization mode switching, synchronization source, and output mode of timing signals when the **28-Type** or **29-Type OLIU**s hardware is provisioned to be line-timed. See the “Commands and Reports” section of this manual for a description of the **`set-sync:`** command format.

---

11. **NOTE:**
    If Kbyte or Sbyte (sync messaging) is enabled for the OC-3/OC-12 **`MAIN-1`** and **`MAIN-2`** optical interfaces on the OC-3/OC-12 ring, it **must** be enabled at all nodes in the FT-2000 ring.

    NOTE:
    The **`rtrv-oc3:`** `or` **`rtrv-oc12:`** command retrieves the `OC-3 Line Provisioning Report` or `OC-12 Line Provisioning Report`. This report displays the provisioned configuration of OC-3/OC-12 lines. See the "Commands and Reports" section of this manual for a description of the **`rtrv-oc3:`** `or` **`rtrv-oc12:`** command format.

    Use the **`rtrv-oc3:`** `or` **`rtrv-oc12:`** command to obtain the `OC-3 Line Provisioning Report` or `OC-12 Line Provisioning Report` and verify if Kbyte/Sbyte is enabled. Use the **`set-oc3:`** or **`set-oc12:`** command to enable the Kbyte/Sbyte parameter, if required.

DO ITEMS BELOW IN ORDER LISTED . . . . FOR DETAILS, GO TO

12. **NOTE:**
    If Sync Autoreconfiguration is enabled, Kbyte/Sbyte must also be enabled.

    NOTE:
    The **`rtrv-sync:`** command retrieves the `Synchronization Report`. This report displays the provisioning and operational information on the synchronization attributes of the DDM-2000. See the "Commands and Reports" section of this manual for a description of the **`rtrv-sync:`** command format.

    Use the **`rtrv-sync:`** command to obtain the `Synchronization Report` and verify if Sync Autoreconfiguration is enabled. Use the **`set-sync:`** command to enable the Sync Autoreconfiguration parameter, if required.

13. Verify no duplicate TID settings exist. The **`rtrv-ne:`** command may be used at each shelf in the network to display settings. If duplicates exist, determine new settings and use the **`set-ne`** command to make new settings.

14. **NOTE:**
    FT-2000 host shelves with Releases 8.1 through 9.1 and FiberReach OC-3/OC-12 hosted shelves with Release 4 software support AGNE(s) and alarm groups. FiberReach hosted shelves with Release 3 software do **not** support these features and will **not** appear in the alarm groups of a network with mixed software.

    NOTE:
    The Remote NE Status (**`rnestat`**) parameter of the **`set-ne:`** command must be enabled prior to designating the AGNE(s) and alarm group numbers.

DO ITEMS BELOW IN ORDER LISTED . . . . FOR DETAILS, GO TO

NOTE:
Shelves may be designated as an alarm gateway network element (AGNE) and assigned an alarm group number. (Default alarm group number is 255.) At least one AGNE is required per alarm group. One primary AGNE and one backup per alarm group is recommmended. For a network greater than 16 nodes, the AGNE and TL1 GNE should be on separate nodes. The AGNE parameter of the **`set-ne:`** command may have been set to yes on each new shelf during shelf turnup procedures to suppress an `AGNE communication failure` alarm.

Use the **`set-ne:`** command to designate the AGNE(s) and alarm group numbers, as required.

---

15. **NOTE:**
Only **one** remote FiberReach OC-3/OC-12 shelf is allowed in this single-homed configuration.

NOTE:
If auto reconfiguration is enabled, the FiberReach shelf that will connect to the FT-2000 via the **MAIN-1** should be the first of the FiberReach ring to connect to the FT-2000. If the FiberReach shelf connecting to FT-2000 via **MAIN-2** is connected first, the FiberReach shelf will remain in holdover until the FiberReach shelf is connected to the FT-2000 via **MAIN-1**.

At the near end, remove the optical loop from the **MAIN OLIU** (for example in Figures 2 and 3, OC-3/ OC-12 node **MAIN-1**) associated with the optical span being established. At the other end of the optical span, remove the optical loop from the associated FT-2000 Optical Interface (for example, in Figures 2 and 3, FT-2000 **LS INTFC 1A** slot).

DO ITEMS BELOW IN ORDER LISTED . . . . FOR DETAILS, GO TO

16. **NOTE:**
The section data communication channel (DCC), used for far end communications, must be enabled at each network element (shelf) optical interface being tested in order for the end-to-end line tests to work. Default condition for the DCC channel is "enabled". If it has been disabled, use the **`set-fecom:`** command **at each shelf** to enable far end communications.

At each FiberReach shelf, use the **`set-fecom:`***`address`***`:com=enabled`** command to ensure far end DCC communications (fecom) is enabled.

At each FT-2000 shelf, use the **`SECURITY-Set-Far End Communications:`** command to ensure far end DCC communications (fecom) is enabled.

---

17. **NOTE:**
FiberReach shelves that are part of a subnetwork being partitioned into multiple areas require that the NSAP*AREA* field and level 2 IS-IS routing parameters of the **`ent-ulsdcc-l3`** command be set. See Section 11 “Commands and Reports” in this manual for an explanation of the command parameters. FT-2000 shelves that are part of a subnetwork being partitioned into multiple areas require that the L3 Area Address and Level 2 IS parameters of the **`CONFIGURATION-Set-ULSDCC-L3`** command be set. See 365-575-103, *FT-2000 OC-48 Lightwave System*, Releases 8.1 Through 9.1, *User/Service Manual*, for an explanation of the command parameters. See 824-102-144, *Lucent Technologies 2000 Product Family, Operations Interworking Guide for TARP Releases*, for an explanation of the engineering rules for subnetwork partitioning.

DO ITEMS BELOW IN ORDER LISTED . . . . FOR DETAILS, GO TO

At the FiberReach shelf, use the **`ent-ulsdcc-l3`** command to designate the NSAPAREA field and level 2 IS-IS routing, as required.

At the FT-2000 shelf, use the **`CONFIGURATION-Set-ULSDCC-L3`** command to designate the L3 Area address and Level 2 IS parameters, as required.

---

18. Perform optical fiber connections and verification of the integrity of the optical span being established. **DLP-514**

---

19. **NOTE:**
The **`rtrv-pm-line`** command in the following procedure displays performance monitoring data associated with the OC-3/OC-12 lines terminated on the system.

Perform end-to-end OC-3/OC-12 line test. **DLP-515**

---

20. Repeat this procedure for all OC-3/OC-12 optical spans being established in the FT-2000 to FiberReach OC-3/OC-12 network. Ensure that the last optical span connected to the FT-2000 host shelf is connected to an **OLIU** in the opposite slot as the one in the first OC-3 span (for example, slot **1A** for the first span and slot **1B** for the second span).

---

21. **NOTE:**
Establishing service requires that the proper slots in each terminating node be properly equipped with the correct circuit pack(s) for the type of service being established. It also requires numerous cross connections in each of the nodes representing the path of the required service. Additionally, transmission tests should be performed to verify the continuity and quality of the established circuit.

The single-homed FiberReach OC-3 or OC-12 access network is now ready for initial service to be established.
Initial DS1 Service [**System Turnup: NTP-004**]
Initial T1 Service [**System Turnup: NTP-013**]
Initial HDSL Service [**System Turnup: NTP-017**]
Initial DS3 Service [**System Turnup: NTP-025**]
STS-3c Service [**System Turnup: NTP-016**]

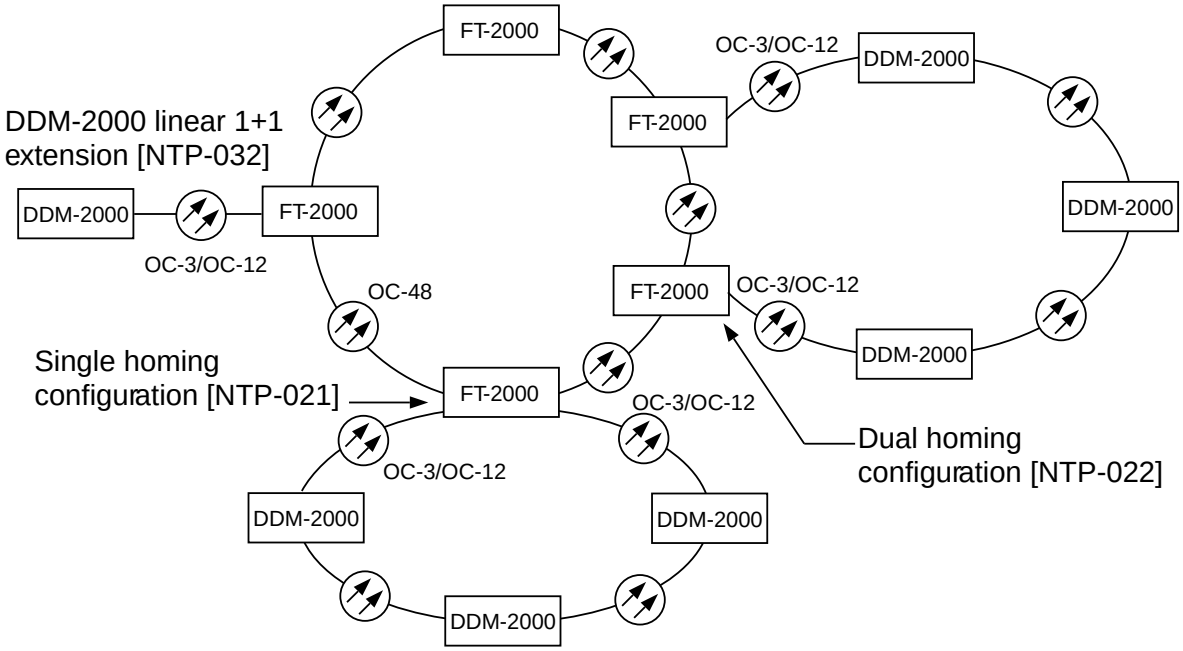

Figure 1 – Example of FT-2000 OC-48/DDM-2000 FiberReach at OC-3/OC-12 Rate Configurations

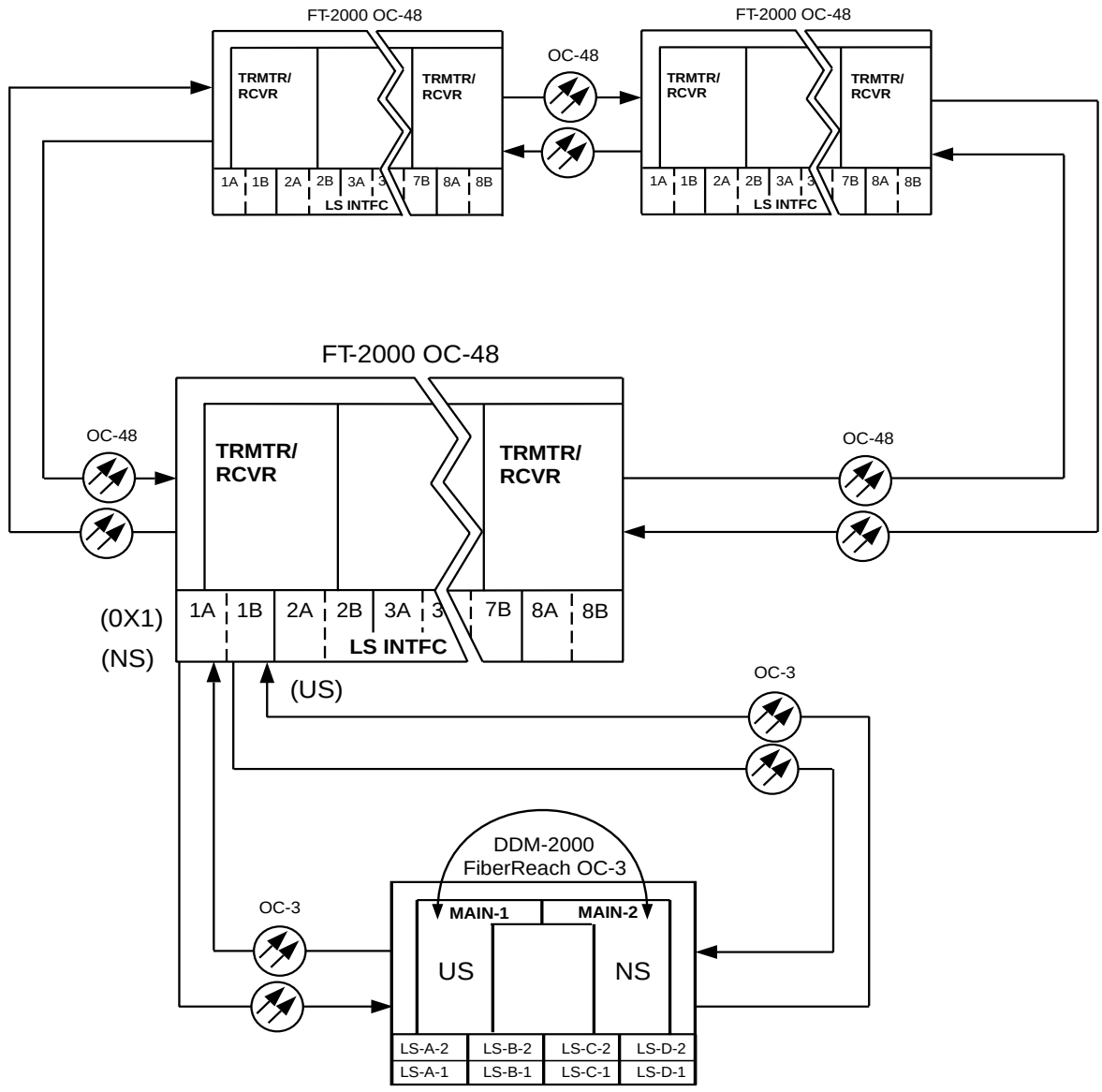

FiberReach Shelf with OC-3 Optics

DDM-2000 FiberReach OC-3 DCC Network Side (NS)/User Side (US) Defaults (set-fecom:nsus=ns/us)		
28-Type OLIUs	**MAIN-1** dcc-m1	**MAIN-2** dcc-m2
	US	NS

Figure 2 – Example of OC-3 Single-Homed User Side/Network Side Value Settings

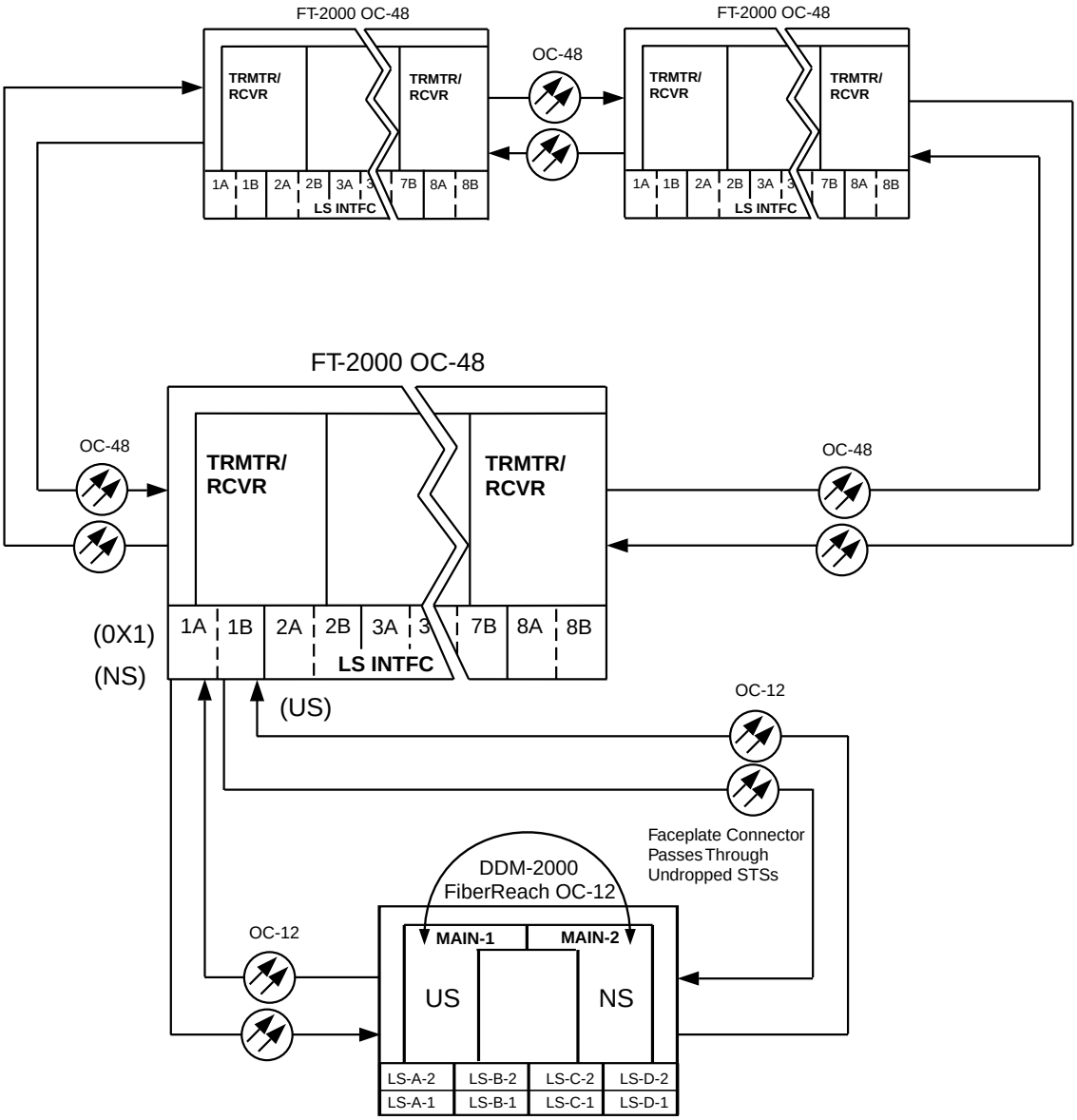

FiberReach Shelf with OC-12 Optics

DDM-2000 FiberReach OC-12 DCC Network Side (NS)/User Side (US) Defaults (set-fecom:nsus=ns/us)		
29-Type OLIUs	**MAIN-1** dcc-m1	**MAIN-2** dcc-m2
	US	NS

Figure 3 – Example of OC-12 Single-Homed User Side/Network Side Value Settings

Establish Dual-Homed FiberReach OC-3 or OC-12 Access via FT-2000 OC-48 Backbone Ring

DO ITEMS BELOW IN ORDER LISTED . . . . FOR DETAILS, GO TO

1. **WARNING:**
Unterminated optical connectors may emit invisible laser radiation. Avoid direct exposure to the beam. Do not view beam with optical instruments. Use of controls or adjustments or performance of procedures other than those specified herein may result in hazardous radiation exposure.

CAUTION:
DDM-2000 circuit packs contain static sensitive components which can be damaged by electrostatic discharge. A static ground wrist strap must be worn when handling the circuit packs. See electrostatic discharge considerations in **Trouble Clearing: TAD-100***.*

NOTE:
FiberReach nodes operating at an OC-3 rate require two **28-Type OLIU**s in the **MAIN** slots of the FiberReach shelf.

NOTE:
FiberReach nodes operating at an OC-12 rate require two **29-Type OLIU**s in the **MAIN** slots of the FiberReach shelf.

NOTE:
The **28-Type** and **29-Type OLIU**s require a faceplate interconnect cable assembly, [comcode 847721271].

NOTE:
If the DDM-2000 fails to respond in the indicated manner, refer to **Trouble Clearing: IXL-001**.

NOTE:
It is assumed that the FT-2000 in the system have passed local tests and the FT-2000 ring has been established. It is also assumed the DDM-2000 FiberReach shelves have been equipped and tested [**System Turnup: NTP-007**].

DO ITEMS BELOW IN ORDER LISTED . . . . . FOR DETAILS, GO TO

NOTE:
This procedure is used to establish a dual-homed FiberReach OC-3/OC-12 ring connection to an FT-2000 ring (See Figure 1). Other configurations may have to be established to obtain your final configuration. See **NTP-021** for single-homed from the FT-2000 low-speed interface (**LS INTFC**) ports.

Determine the network configuration (for example, see Figure 1.)

2. Verify that the host FT-2000 OC-48 shelves are equipped with TARP Release 8.1 or later ring software. If not equipped with TARP Release 8.1 or later software, upgrade the FT-2000 OC-48 host shelves with proper software. Verify that the DDM-2000 FiberReach shelves are equipped with TARP Release 3 (OC-3) or Release 4 (OC-3 or OC-12) ring software.

3. Determine the optical loss of each optical span from office records or by making the required measurements.

4. At FT-2000, verify/provision the FT-2000 low speed OC-3/OC-12 slots Protection Mode (from OC-3/OC-12) Parameter to "*0X1*" (See **`CONFIGURATION-Set-OC3`** or **`CONFIGURATION-Set-OC12`** command in 365-575-103, *FT-2000 OC-48 Lightwave System, Release 8.1 Through 9.1, User/Service Manual)*.

5. At FT-2000 shelf, verify/assign DCC channels to FT-2000 low speed OC-3/OC-12 slots. (See **`CONFIGURATION-Enter-Assignment-DCC`** command in 365-575-103, *FT-2000 OC-48 Lightwave System, Release 8.1 Through 9.1, User/Service Manual)*.

6. **NOTE:**
   FAULT LEDs will not go off until fibers are connected to the DDM.

   Add OC-3/IS-3 Low Speed Circuit Pack(s), NTP-010 or **Add OC-12 Low Speed Circuit Pack(s), NTP-012** at the host FT-2000 shelves. (365-575-103, *FT-2000 OC-48 Lightwave System, Release 8.1 Through 9.1, User/Service Manual)*.

DO ITEMS BELOW IN ORDER LISTED . . . . FOR DETAILS, GO TO

7. What Release of software is installed in the FiberReach shelf?
   If Release 4 software is installed, continue with Step 8.
   If Release 3 software is installed, proceed to Step 9.

8. Use the **`rtrv-oc3/set-oc3`** or **`rtrv-oc12/set-oc12`** command at the remote DDM-2000 FiberReach shelf to verify/set application (*dcc*) parameter for the OC-3/OC-12 **MAIN** slots being used for this OC-3/OC-12 single-homed configuration. For example,
   `set-oc3:main-1,dcc=`*`distinct`* and
   `set-oc3:main-2,dcc=`*`distinct`* or
   `set-oc12:main-1,dcc=`*`distinct`* and
   `set-oc12:main-2,dcc=`*`distinct`*.

9. **NOTE:**
   This procedure will establish the OC-3/OC-12 ring configuration starting from one FT-2000 host node (far end) to the first OC-3/OC-12 node (near end), then continuing to the next OC-3/OC-12 node until the final connection is made from the last OC-3/OC-12 node to the other host FT-2000 node.

   NOTE:
   The Network Side (NS)/User Side (US) parameters of the DDM-2000 OC-3/OC-12 **`set-fecom:`** command and the FT-2000 DCC orientation must be set opposite at each end of the optical spans. For example, see Figures 2 and 3.

   Use the **`rtrv-fecom`** command at the DDM-2000 to retrieve DCC parameters. Use **`set-fecom:nsus=`***`NS/US`* command at the DDM-2000 to set “Network Side (NS)/User Side (US)” parameters at each end of all optical spans being established. Use the **`CONFIGURATION-Enter-Assignment-DCC`** command at the FT-2000 to assign DCC channels.

DO ITEMS BELOW IN ORDER LISTED. . . . . FOR DETAILS, GO TO

10. Use the **`set-sync:`** command to provision the synchronization mode switching, synchronization source, and output mode of timing signals when the **28-Type** or **29-Type OLIU**s hardware is provisioned to be line-timed. See the “Commands and Reports” section of this manual for a description of the **`set-sync:`** command format.

---

11. **NOTE:**
    If Kbyte or Sbyte (sync messaging) is enabled for the OC-3/OC-12 **`MAIN-1`** and **`MAIN-2`** optical interfaces at any node in the OC-3/OC-12 ring, it **must** be enabled at all nodes in the OC-3/OC-12 ring.

    NOTE:
    The **`rtrv-oc3:`** or **`rtrv-oc12:`** command retrieves the `OC-3 Line Provisioning Report` or `OC-12 Line Provisioning Report.` This report displays the provisioned configuration of OC-3/OC-12 lines. See the "Commands and Reports" section of this manual for a description of the **`rtrv-oc3:`** or **`rtrv-oc12:`** command format.

    Use the **`rtrv-oc3:`** or **`rtrv-oc12:`** command to obtain the `OC-3 Line Provisioning Report` or `OC-12 Line Provisioning Report` and verify if Kbyte/Sbyte is enabled. Use the **`set-oc3:`** or **`set-oc12:`** command to enable the Kbyte/Sbyte parameter, if required.

---

12. **NOTE:**
    If Sync Autoreconfiguration is enabled, Kbyte/Sbyte must also be enabled.

    NOTE:
    If Sync Autoreconfiguration is enabled at any line-timed OC-3/OC-12 node in a ring, it **must** be enabled at all line-timed OC-3/OC-12 nodes of a ring.

    NOTE:
    The **`rtrv-sync:`** command retrieves the `Synchronization Report.` This report displays the provisioning and operational information on the synchronization attributes of the DDM-2000. See the "Commands and Reports" section of this manual for a description of the **`rtrv-sync:`** command format.

DO ITEMS BELOW IN ORDER LISTED . . . . FOR DETAILS, GO TO

Use the **`rtrv-sync:`** command to obtain the `Synchronization Report` and verify if Sync Autoreconfiguration is enabled. Use the **`set-sync:`** command to enable the Sync Autoreconfiguration parameter, if required.

13. Verify no duplicate TID settings exist. The **`rtrv-ne:`** command may be used at each shelf in the network to display settings. If duplicates exist, determine new settings and use the **`set-ne:`** command to make new settings.

14. **NOTE:**
FT-2000 host shelves with Releases 8.1 through 9.1 and FiberReach OC-3/OC-12 hosted shelves with Release 4 software support AGNE(s) and alarm groups. FiberReach hosted shelves with Release 3 software do **not** support these features and will **not** appear in the alarm groups of a network with mixed software.

NOTE:
The Remote NE Status (**`rnestat`**) parameter of the **`set-ne:`** command must be enabled prior to designating the AGNE(s) and alarm group numbers.

NOTE:
Shelves may be designated as an alarm gateway network element (AGNE) and assigned an alarm group number. (Default alarm group number is 255.) At least one AGNE is required per alarm group. One primary AGNE and one backup per alarm group is recommmended. For a network greater than 16 nodes, the AGNE and TL1 GNE should be on separate nodes. The AGNE parameter of the **`set-ne:`** command may have been set to yes on each new shelf during shelf turnup procedures to suppress an `AGNE communication failure` alarm.

Use the **`set-ne:`** command to designate the AGNE(s) and alarm group numbers, as required.

DO ITEMS BELOW IN ORDER LISTED . . . . . FOR DETAILS, GO TO

15. **NOTE:**
Multiple FiberReach OC-3/OC-12 shelves are allowed in this dual-homed configuration.

NOTE:
If auto reconfiguration is enabled, the FiberReach shelf that will connect to the FT-2000 via the **MAIN-1** should be the first of the FiberReach ring to connect to the FT-2000. If the FiberReach shelf connecting to FT-2000 via **MAIN-2** is connected first, the FiberReach shelf will remain in holdover as will all other subsequent FiberReach shelves in the ring until the shelf connecting to the FT-2000 via **MAIN-1** is connected.

At the near end, remove the optical loop from the **MAIN OLIU** (for example in Figure 2, OC-3/OC-12 node 1 **MAIN-1**) associated with the optical span being established. At the other end of the optical span, remove the optical loop from the associated FT-2000 Optical Interface (for example, in Figures 2 and 3, FT-2000 **LS INTFC 1A** slot).

---

16. **NOTE:**
The section data communication channel (DCC), used for far end communications, must be enabled at each network element (shelf) optical interface being tested in order for the end-to-end line tests to work. Default condition for the DCC channel is "enabled". If it has been disabled, use the **`set-fecom`**: command at each shelf to enable far end communications.

At each FiberReach shelf, use the **`set-fecom:`***address***`:com=enabled`** command to ensure far end DCC communications (fecom) is enabled.

At each FT-2000 shelf, use the **`SECURITY-Set-Far End Communications:`** command to ensure far end DCC communications (fecom) is enabled.

DO ITEMS BELOW IN ORDER LISTED . . . . FOR DETAILS, GO TO

17. **NOTE:**
FiberReach shelves that are part of a subnetwork being partitioned into multiple areas require that the NSAP*AREA* field and level 2 IS-IS routing parameters of the **`ent-ulsdcc-l3`** command be set. See Section 11 “Commands and Reports” in this manual for an explanation of the command parameters. FT-2000 shelves that are part of a subnetwork being partitioned into multiple areas require that the L3 Area Address and Level 2 IS parameters of the **`CONFIGURATION-Set-ULSDCC-L3`** command be set. See 365-575-103, *FT-2000 OC-48 Lightwave System, Releases 8.1 Through 9.1, User/Service Manual*, for an explanation of the command parameters. See 824-102-144, *Lucent Technologies 2000 Product Family, Operations Interworking Guide for TARP Releases*, for an explanation of the engineering rules for subnetwork partitioning.

At the DDM-2000 shelf, use the **`ent-ulsdcc-l3`** command to designate the NSAPAREA field and level 2 IS-IS routing, as required.

At the FT-2000 shelf, use the **`CONFIGURATION-Set-ULSDCC-L3`** command to designate the L3 Area address and Level 2 IS parameters, as required.

---

18. Perform optical fiber connections and verification of the integrity of the optical span being established. **DLP-514**

---

19. **NOTE:**
The **`rtrv-pm-line`** command in the following procedure displays performance monitoring data associated with the OC-3/OC-12 lines terminated on the system.

Perform end-to-end OC-3/OC-12 line test. **DLP-515**

---

20. Repeat this procedure for all OC-3/OC-12 optical spans being established in the FiberReach OC-3/OC-12 network. Ensure that the last optical span connected to the FT-2000 host shelf is connected to an Optical Interface Unit in the opposite slot as the one in the first host FT-2000 shelf (for example, slot **1A** at one node and slot **8B** at the other node).

DO ITEMS BELOW IN ORDER LISTED . . . . . FOR DETAILS, GO TO

21. **NOTE:**
Establishing service requires that the proper slots in each terminating node be properly equipped with the correct circuit pack(s) for the type of service being established. It also requires numerous cross connections in each of the nodes representing the path of the required service. Additionally, transmission tests should be performed to verify the continuity and quality of the established circuit.

The dual-homed FiberReach OC-3/OC-12 access network is now ready for initial service to be established.
Initial DS1 Service [**System Turnup: NTP-004**]
Initial T1 Service [**System Turnup: NTP-013**]
Initial HDSL Service [**System Turnup: NTP-017**]
Initial DS3 Service [**System Turnup: NTP-025**]
STS-3c Service [**System Turnup: NTP-016**]

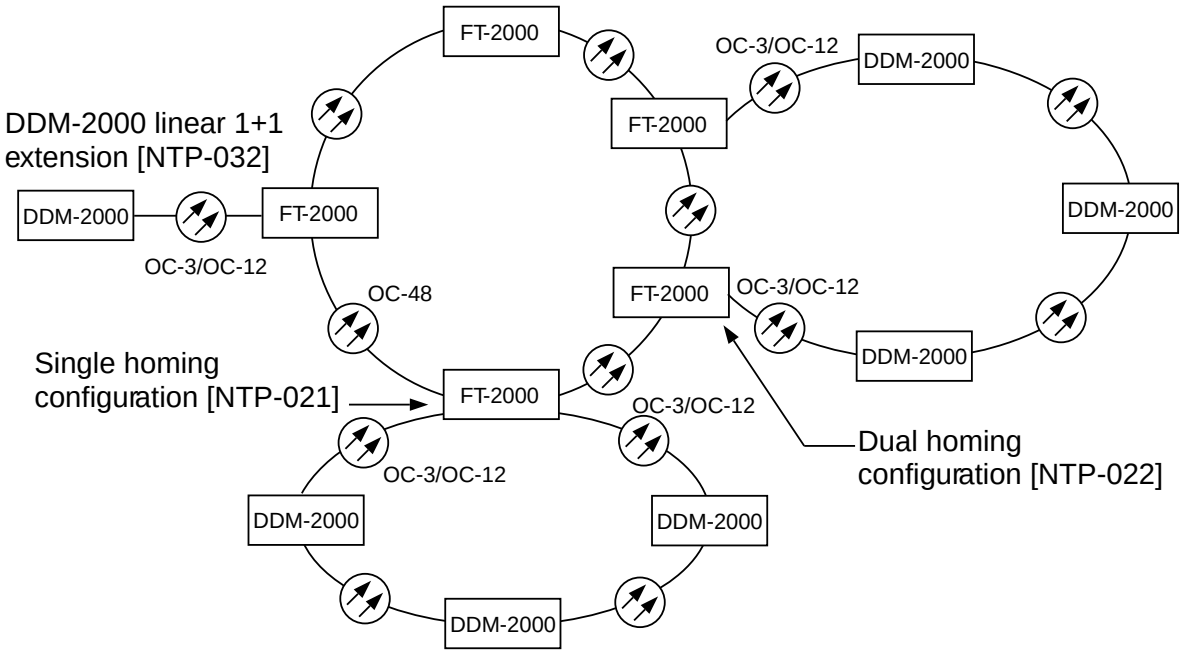

Figure 1 – Example of FT-2000 OC-48/DDM-2000 FiberReach at OC-3/OC-12 Rate Configurations

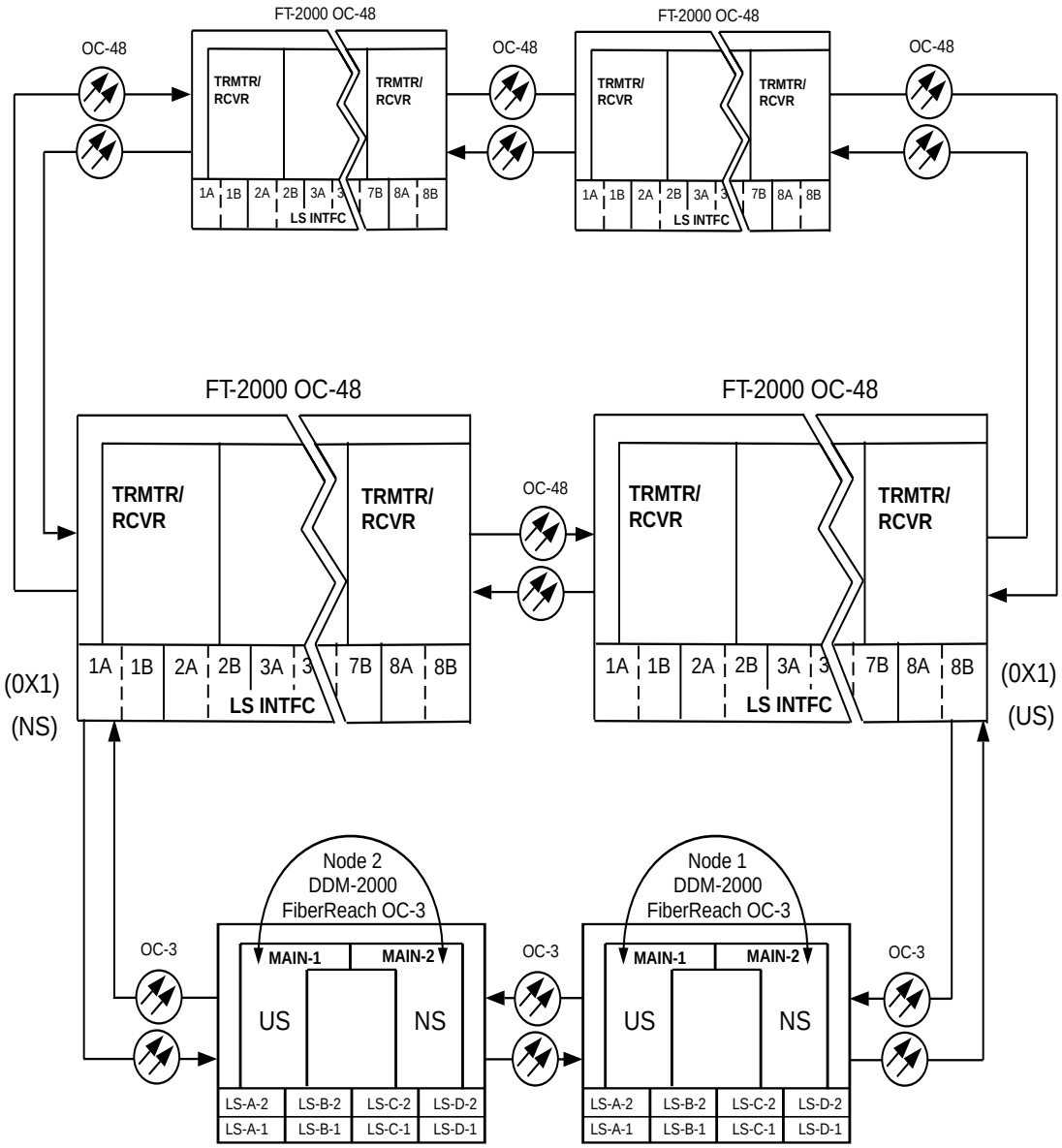

Figure 2 – Example of OC-3 Dual-Homed User Side/Network Side Value Settings

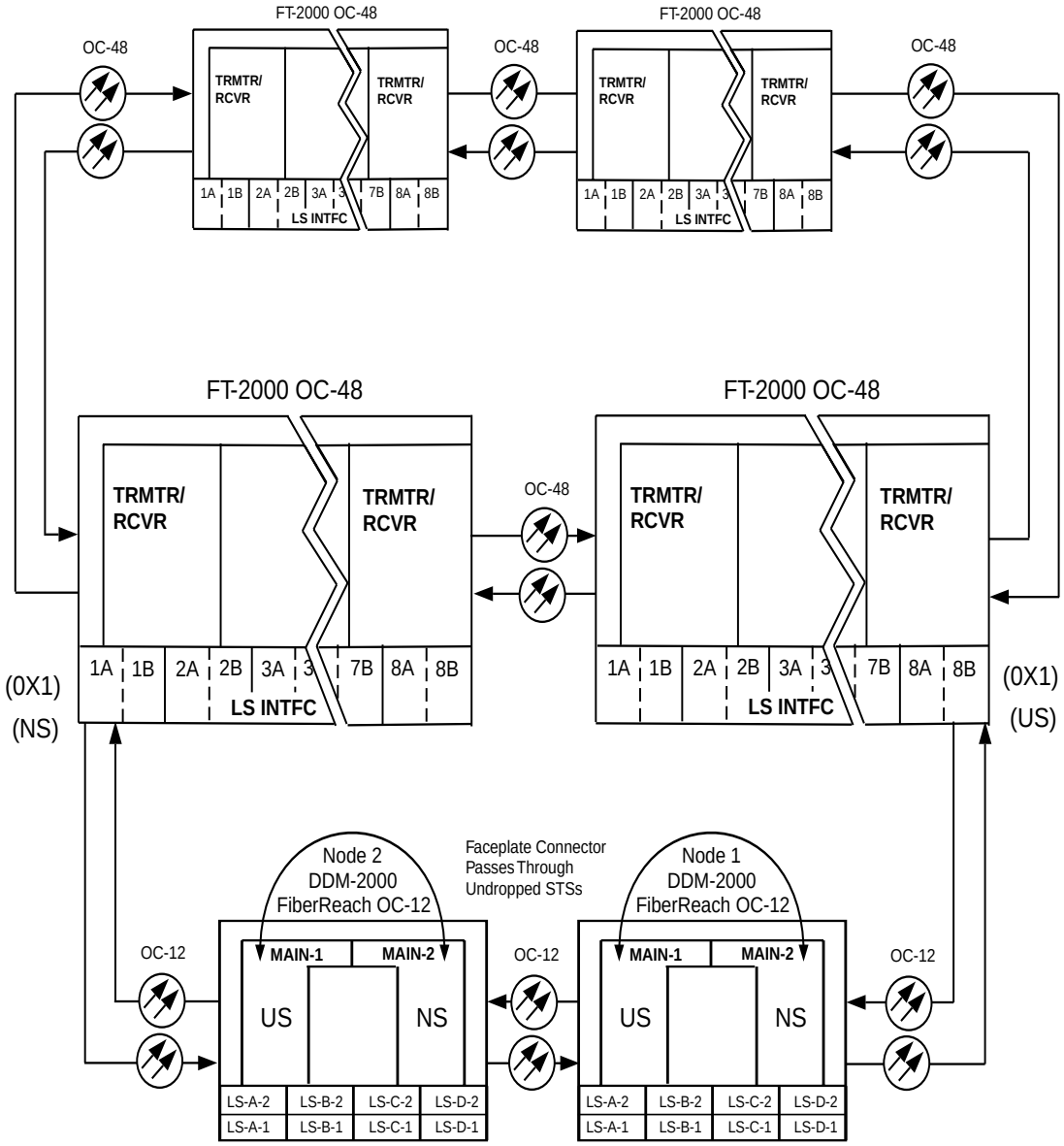

FiberReach Shelf with OC-12 Optics

DDM-2000 FiberReach OC-12 DCC Network Side (NS)/User Side (US) Defaults (set-ecom:nsus=ns/us)		
29-Type OLIUs	**MAIN-1** dcc-m1	**MAIN-2** dcc-m2
	US	NS

Figure 3 – Example of OC-12 Dual-Homed User Side/Network Side Value Settings

Establish Dual-Homed FiberReach OC-3 Access via DDM-2000 OC-12 Backbone Ring

DO ITEMS BELOW IN ORDER LISTED . . . . FOR DETAILS, GO TO

1. **WARNING:**
Unterminated optical connectors may emit invisible laser radiation. Avoid direct exposure to the beam. Do not view beam with optical instruments. Use of controls or adjustments or performance of procedures other than those specified herein may result in hazardous radiation exposure.

CAUTION:
DDM-2000 circuit packs contain static sensitive components which can be damaged by electrostatic discharge. A static ground wrist strap must be worn when handling the circuit packs. See electrostatic discharge considerations in **Trouble Clearing: TAD-100**.

NOTE:
FiberReach nodes operating at an OC-3 rate require two **28-Type OLIU**s in the **MAIN** slots of the FiberReach shelf.

NOTE:
The **28-Type OLIU**s require a faceplate interconnect cable assembly, [comcode(847721271].

NOTE:
If the DDM-2000 fails to respond in the indicated manner, refer to **Trouble Clearing: IXL-001**.

DO ITEMS BELOW IN ORDER LISTED . . . . . FOR DETAILS, GO TO

NOTE:
It is assumed that all DDM-2000 OC-12 shelves in the system have passed the looped transmission test(s) (363-206-295, *DDM-2000 OC-12 Multiplexer,TARP Release 7, User/Service Manual (TOP) - Volume II*, **System Turnup: NTP-002** or 363-206-285, *DDM-2000 OC-3 Multiplexer,TARP Release 13 and Later, User/Service Manual (TOP) - Volume II*, **System Turnup: NTP-016**) and the DDM-2000 OC-12 ring has been established (363-206-295, *DDM-2000 OC-12 Multiplexer, TARP Release 7, User/Service Manual (TOP) - Volume II*, **System Turnup: NTP-020** or 363-206-285, *DDM-2000 OC-3 Multiplexer,TARP Release 13 and Later, User/Service Manual (TOP) - Volume II*, **System Turnup: NTP-022**). It is also assumed the DDM-2000 FiberReach shelves have been equipped and tested, **System Turnup: NTP-007**.

Determine the network configuration (for example, see Figures 1, 2, 5, and 6.)

---

2. Verify that the DDM-2000 OC-12 host shelf is equipped with TARP Release 7 or 13/15 ring software. If not equipped with TARP Release 7 or 13/15 software, upgrade the DDM-2000 OC-12 host shelf with proper software. Verify that the DDM-2000 FiberReach hosted shelf is equipped with TARP Release 3 or 4 ring software. **DLP-531**

---

3. Determine the optical loss of each optical span from office records or by making the required measurements.

---

4. **NOTE:**
The **`rtrv-eqpt:`** command retrieves the `Equipage and Version Report`. This report lists the circuit pack type and version information for one or more slots. See the "Commands and Reports" section of this manual for a description of the **`rtrv-eqpt:`** command format.

DO ITEMS BELOW IN ORDER LISTED . . . . FOR DETAILS, GO TO

NOTE:
If work order or office records do not specify **OLIU** types, refer to 363-206-200, *DDM-2000 OC-3 and OC-12 Multiplexers, Applications, Planning and Ordering Guide* and this User/Service Manual, for a description of **OLIU** circuit packs and applications. Optical line power measurements and/or office records must be used to verify that the span length can be supported.

At the host OC-12 nodes, verify/install **OLIU** circuit packs in **FUNCTION UNITS** (**A**, **B**, **C**, or **D**) slots being used for OC-3 access.

---

5. **NOTE:**
If fecom is enabled, an `inconsistent DCC values` alarm will occur when the **OLIUs** are looped back. Normally, the alarm occurs when the user/network parameters at both ends of the DCC are set the same. To clear the alarm during a fiber loopback, use the **`set-fecom:`***address***`:com=disable`** command to disable the DCC.

   At OC-12 shelves, connect optical loops for **FUNCTION UNITS OLIU**s just installed.

---

6. **NOTE:**
The Network Side (NS)/User Side (US) parameters of the **`set-fecom:`** command must be set opposite at each end of the optical spans. For example, see Figures 3, 4, 7, and 8.

   Use the **`rtrv-fecom/set-fecom`** command to verify/set "Network Side/User Side" parameters at each end of OC-3 optical span being established.

---

7. What Release of software is installed in the OC-12 host shelf?
   If Release 7 or 15 software is installed, continue with Step 8.
   If Release 13 software is installed, proceed to Step 9.

DO ITEMS BELOW IN ORDER LISTED. . . . .FOR DETAILS, GO TO

8. Use the **`rtrv-oc3/set-oc3`** command at the OC-12 host shelf to verify/set application (*app*) parameter for the OC-12 **FUNCTION UNITS** slots being used for this single-homed configuration. For example, **`set-oc3:fn-a,app=0X1`**.

9. What Release of software is installed in the FiberReach OC-3 hosted shelf?
   If Release 4 software is installed, continue with Step 10.
   If Release 3 software is installed, proceed to Step 11.

10. Use the **`rtrv-oc3/set-oc3`** command at the remote FiberReach OC-3 shelf to verify/set application (*dcc*) parameter for the OC-3 **MAIN** slots being used for this single-homed OC-3. For example,
    `set-oc3:main-1,dcc=`*`distinct`* and
    `set-oc3:main-2,dcc=`*`distinct`*.

11. Use the **`set-sync:`** command to provision the synchronization mode switching, synchronization source, and output mode of timing signals when the **28-Type OLIU** hardware is provisioned to be line-timed. See the “Commands and Reports” section of this manual for a description of the **`set-sync:`** command format.

DO ITEMS BELOW IN ORDER LISTED . . . . FOR DETAILS, GO TO

12. **NOTE:**
If line timing mode is specified or external timing mode is specified but the timing reference was not available at the OC-12 shelf turnup, the **TGS/TG3** option switches are probably set for *free running*. Before this configuration is established, the specified timing mode must be set on the **TGS/TG3** circuit packs.

NOTE:
If the option switch setting is changed, an update must be done by momentarily depressing the **UPD/INIT** button on the **SYSCTL** after the **TGS/TG3** circuit packs are reinstalled.

NOTE:
If external timing is selected and the **NE ACTY** LED remains lighted after the **TGS/TG3** circuit pack is reinserted, use the CIT and the **`rtrv-sync:`** command to check the operational mode of the system. If the mode is `Holdover` instead of `External`, check that the incoming timing references are connected. Also check `Mode Switching` (revertive or nonrevertive) and the external `DS1 Line Code/Format` switch settings.

Set timing mode on OC-12 **TGS/TG3** circuit packs to the timing mode specified in work order or office records. (363-206-295, *DDM-2000 OC-12 Multiplexer, TARP Release 7, User/Service Manual (TOP) - Volume II*, **DLP- 510** or 363-206-285, *DDM-2000 OC-3 Multiplexer, TARP Release 13 and Later, User/Service Manual (TOP) - Volume II*, **DLP- 513**)

DO ITEMS BELOW IN ORDER LISTED . . . . . FOR DETAILS, GO TO

13. **NOTE:**
If Kbyte or Sbyte (sync messaging) is enabled for the FiberReach OC-3 **MAIN-1** and **MAIN-2** optical interfaces at any node in the OC-3 ring, it **must** be enabled at all nodes in the OC-3 ring and in the **FUNCTION UNITS** slots of the host OC-12 shelf.

NOTE:
The **`rtrv-oc3:`** command retrieves the `OC-3 Line Provisioning Report`. This report displays the provisioned configuration of OC-3 lines. See the "Commands and Reports" section of 363-206-295, *DDM-2000 OC-12 Multiplexer, TARP Release 7, User/Service Manual - Volume I,* 363-206-285, *DDM-2000 OC-3 Multiplexer, TARP Release 13 and Later, User/Service Manual - Volume I,* and this manual, for a description of the **`rtrv-oc3:`** command format.

Use the **`rtrv-oc3:`** command to obtain the `OC-3 Line Provisioning Report` and verify if Kbyte/Sbyte is enabled. Use the **`set-oc3:`** command to enable the Kbyte/Sbyte parameter, if required.

---

14. **NOTE:**
If Sync Autoreconfiguration is enabled, Kbyte/Sbyte must also be enabled.

NOTE:
If Sync Autoreconfiguration is enabled at any line-timed OC-3 node in a ring, it **must** be enabled at all line-timed OC-3 nodes of a ring.

DO ITEMS BELOW IN ORDER LISTED . . . . FOR DETAILS, GO TO

NOTE:
The **`rtrv-sync:`** command retrieves the `Synchronization Report`. This report displays the provisioning and operational information on the synchronization attributes of the DDM-2000. See the "Commands and Reports" section of 363-206-295, *DDM-2000 OC-12 Multiplexer, TARP Release 7, User/Service Manual - Volume I,* 363-206-285, *DDM-2000 OC-3 Multiplexer, TARP Release 13 and Later, User/Service Manual - Volume I,* and this manual, for a description of the **`rtrv-sync:`** command format.

Use the **`rtrv-sync:`** command to obtain the `Synchronization Report` and verify if Sync Autoreconfiguration is enabled. Use the **`set-sync:`** command to enable the Sync Autoreconfiguration parameter, if required.

15. Verify no duplicate TID settings exist. The **`rtrv-ne:`** command may be used at each shelf in the network to display settings. If duplicates exist, determine new settings and use the **`set-ne`** command to make new settings.

DO ITEMS BELOW IN ORDER LISTED . . . . . FOR DETAILS, GO TO

16. **NOTE:**
OC-12 host shelves with Release 15 and FiberReach OC-3 hosted shelves with Release 4 software support AGNE(s) and alarm groups. OC-12 host shelves with Release 7 or 13 and FiberReach hosted shelves with Release 3 software do **not** support these features and will **not** appear in the alarm groups of a network with mixed software.

NOTE:
The Remote NE Status (**`rnestat`**) parameter of the **`set-ne:`** command must be enabled prior to designating the AGNE(s) and alarm group numbers.

NOTE:
Shelves may be designated as an alarm gateway network element (AGNE) and assigned an alarm group number. (Default alarm group number is 255.) At least one AGNE is required per alarm group. One primary AGNE and one backup per alarm group is recommmended. For a network greater than 16 nodes, the AGNE and TL1 GNE should be on separate nodes. The AGNE parameter of the **`set-ne:`** command may have been set to yes on each new shelf during shelf turnup procedures to suppress an `AGNE communication failure` alarm.

Use the **`set-ne:`** command to designate the AGNE(s) and alarm group numbers, as required.

DO ITEMS BELOW IN ORDER LISTED . . . . FOR DETAILS, GO TO

17. **NOTE:**
Multiple FiberReach OC-3 shelves are allowed in this dual-homed configuration.

NOTE:
In dual homing configurations, **OLIU** circuit packs must be installed in the correct **FUNCTION UNITS** slots in the host OC-12 nodes to support the direction of traffic required. For example, see Figures 1, 2, 5, and 6. In Figures 1 and 5, if an OLIU is installed in Node 5, **FUNCTION UNITS** group **A**, slot **1**, traffic will be routed toward Node 6 when cross connections are made. The other end of the associated OC-3 ring must be connected to an **OLIU** installed in slot **2(P)** of the **FUNCTION UNITS** group ( ) being used to terminate the OC-3 line (for example, Node 4 in Figures 1 and 5). Traffic from Node 4 will then be directed toward Node 3 when cross-connections are made. In Figures 2 and 6, note that all traffic from the OC-3 shelf will be directed to Node 8 because of the slot positions that terminate the OC-3 line.

NOTE:
A dual-homed ring configuration requires that the first FiberReach OC-3 **MAIN-1 OLIU** connect to **FUNCTION UNITS ( ) 1 OLIU** on one host OC-12 shelf. The last FiberReach OC-3 **MAIN-2 OLIU** connects to the **FUNCTION UNITS ( ) 2(P) OLIU** on the other host OC-12 shelf. Intermediate FiberReach OC-3 shelves on the same FiberReach OC-3 ring connect from **MAIN-2 OLIU** at one FiberReach OC-3 shelf to the **MAIN-1 OLIU** at an adjacent FiberReach OC-3 shelf (node). For example, see Figures 3 and 5. This procedure will establish the ring configuration starting from one OC-12 host node (near end) and continuing to an adjacent FiberReach OC-3 node, then to the next FiberReach OC-3 node until the final connection is made from the last FiberReach OC-3 node to the remaining OC-12 host node.

DO ITEMS BELOW IN ORDER LISTED . . . . . FOR DETAILS, GO TO

NOTE:
Unused optical connectors on **OLIU**s should remain looped until optical line connections are made.

At the near end OC-12 host node, remove the optical loop from the **FUNCTION UNITS OLIU** being used for the OC-3 ring configuration (for example, in Figures 3 and 5, OC-12 shelf Node 5, slot **FUNCTION UNITS A 1**) At the other end of the optical span being established, remove the optical loop from the associated **28-Type OLIU** (for example, in Figures 3 and 5, FiberReach OC-3 shelf Node 7 **MAIN-1 OLIU**.

---

18. **NOTE:**
The section data communication channel (DCC), used for far end communications, must be enabled at each network element (shelf) optical interface being tested in order for the end-to-end line tests to work. Default condition for the DCC channel is "enabled". If it has been disabled, use the **`set-fecom:`** command **at each shelf** to enable far end communications.

At each shelf, use the **`set-fecom:`***address***`:com=enabled`** command to ensure far end communications (fecom) is enabled.

---

19. **NOTE:**
Shelves that are part of a subnetwork being partitioned into multiple sreas require that the NSAP*AREA* field and level 2 IS-IS routing parameters of the **`ent-ulsdcc-l3`** command be set. See Section 11 “Commands and Reports” in 363-206-295, *DDM-2000 OC-12 Multiplexer, TARP Release 7, User/Service Manual - Volume I* and this manual, for an explanation of the command parameters and 824-102-144, *Lucent Technologies 2000 Product Family, Operations Interworking Guide for TARP Releases*, for an explanation of the engineering rules for subnetworking partitioning.

Use the **`ent-ulsdcc-l3`** command to designate the NSAP*AREA* field and level 2 IS-IS routing, as required.

DO ITEMS BELOW IN ORDER LISTED . . . . FOR DETAILS, GO TO

20. Perform optical fiber connections and verification of the integrity of the optical span being established. **DLP-514**

21. **NOTE:**
    The **`rtrv-pm-line`** command in the following procedure displays performance monitoring data associated with the OC-3 lines terminated on the system.

    Perform end-to-end OC-3 line test. **DLP-515**

22. Repeat this procedure for all OC-3 optical spans being established in the DDM-2000 OC-12/OC-3 network. Ensure that the last optical span connected to the OC-12 host shelf is connected to an **OLIU** in the opposite slot as the one in the first host OC-12 (for example in Figures 3 and 5, slot **1** at one host node and slot **2(P)** at the other host node).

23. **NOTE:**
    Establishing service requires that the proper slots in each terminating node be properly equipped with the correct circuit pack(s) for the type of service being established. It also requires numerous cross connections in each of the nodes representing the path of the required service. Additionally, transmission tests should be performed to verify the continuity and quality of the established circuit.

    The dual-homed DDM-2000 OC-3 access network is now ready for initial service to be established.
    Initial DS1 Service [**System Turnup: NTP-004**]
    Initial T1 Service [**System Turnup: NTP-013**]
    Initial HDSL Service [**System Turnup: NTP-017**]
    Initial DS3 Service [**System Turnup: NTP-025**]
    STS-3c Service [**System Turnup: NTP-016**]

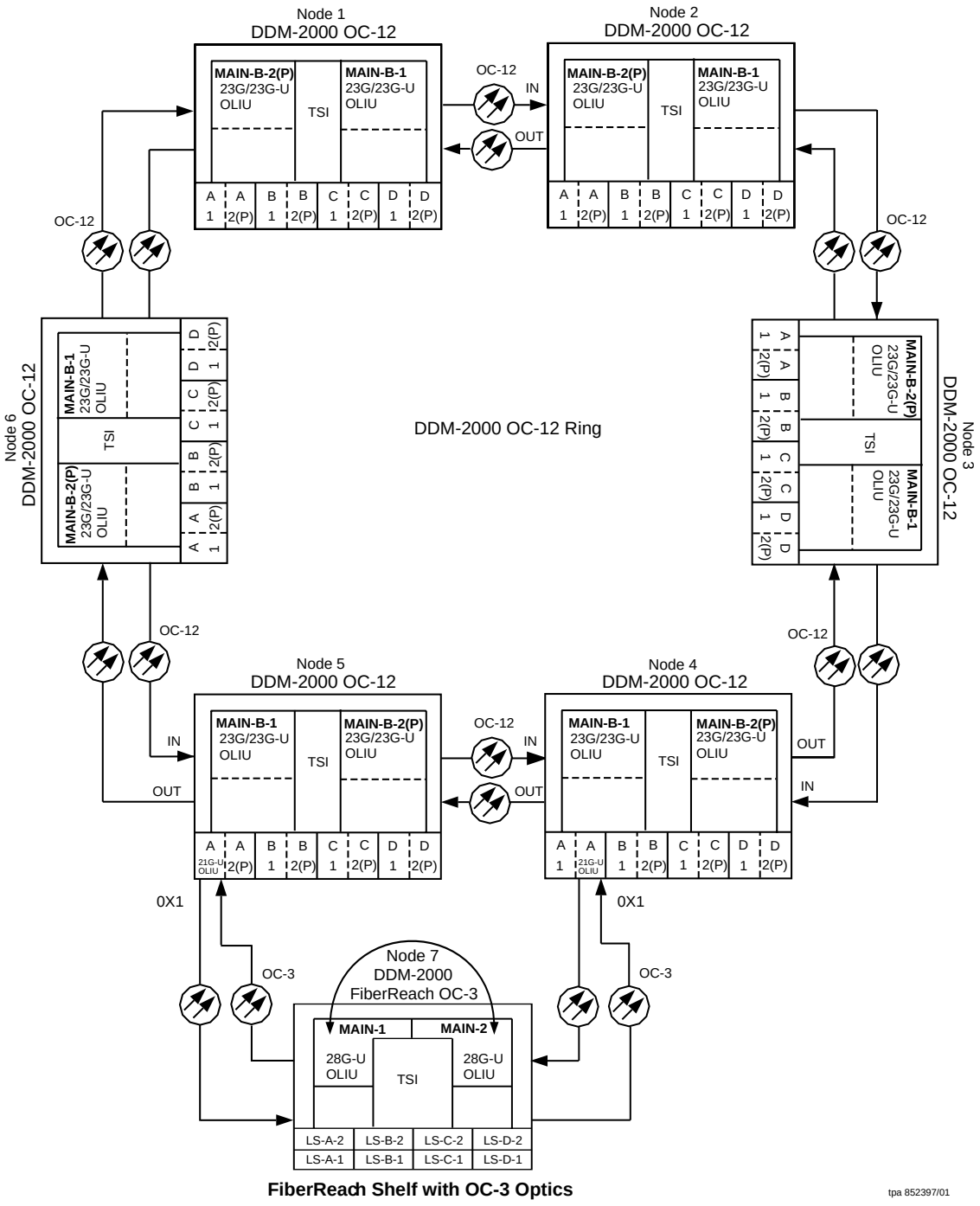

Figure 1 – Example 1 of Dual-Homed FiberReach at OC-3 Rate/OC-12 Ring Configuration

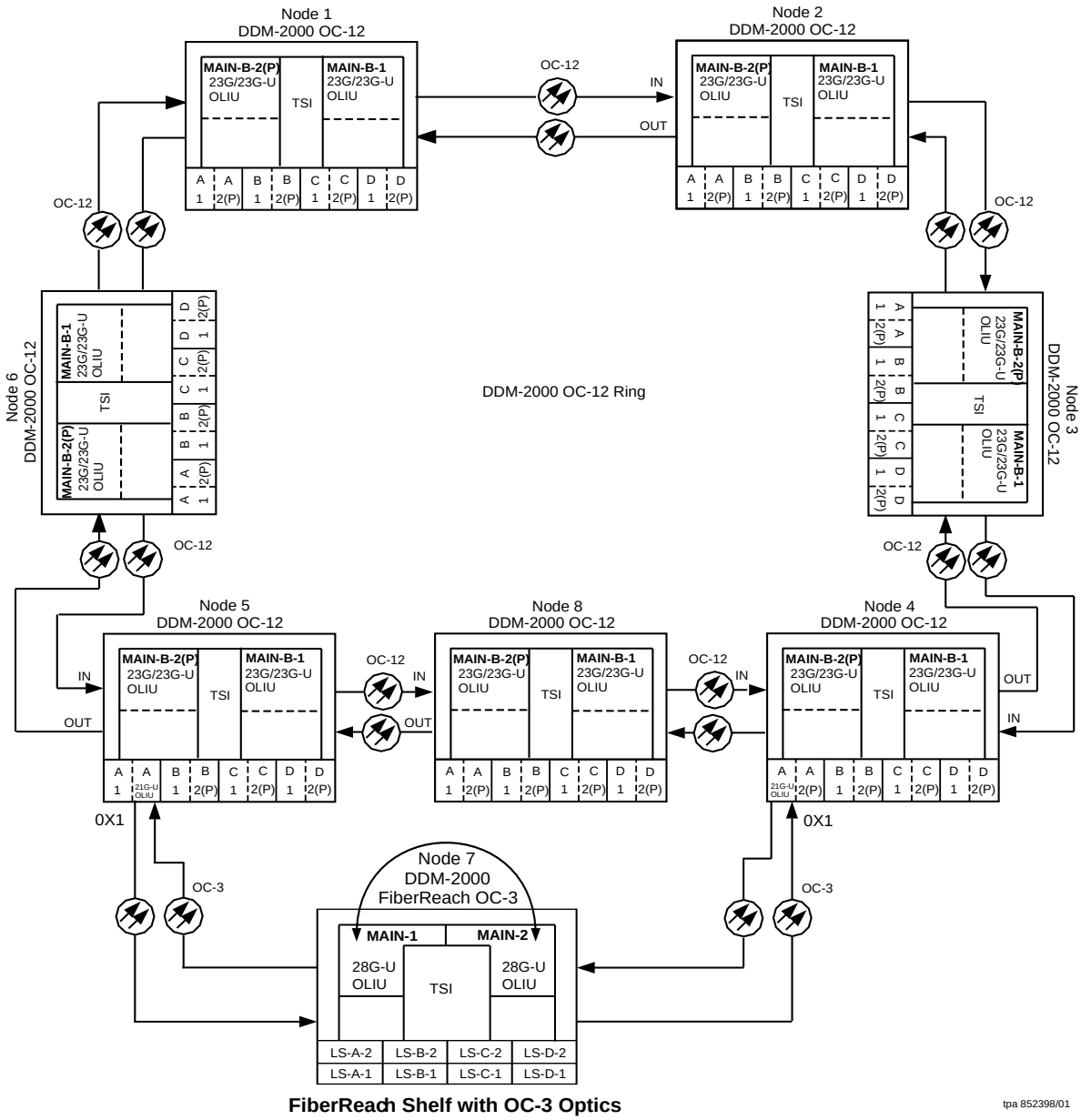

Figure 2 – Example 2 of Dual-Homed FiberReach at OC-3 Rate/OC-12 Ring Configuration

DDM-2000 OC-12 DCC Network Side (NS)/User Side (US) Defaults (set-fecom:nsus=ns/us)								
21-Type OLIUs (0X1 or video)	**FN-A-1** dcc-a1	**FN-A-2** dcc-a2	**FN-B-1** dcc-b1	**FN-B-2** dcc-b2	**FN-C-1** dcc-c1	**FN-C-2** dcc-c2	**FN-D-1** dcc-d1	**FN-D-2** dcc-d2
	NS	US	NS	US	NS	US	NS	US
23-Type OLIUs	**MAIN-B-1** dcc-mb1		**MAIN-B-2(P)** dcc-mb2					
	US		NS					

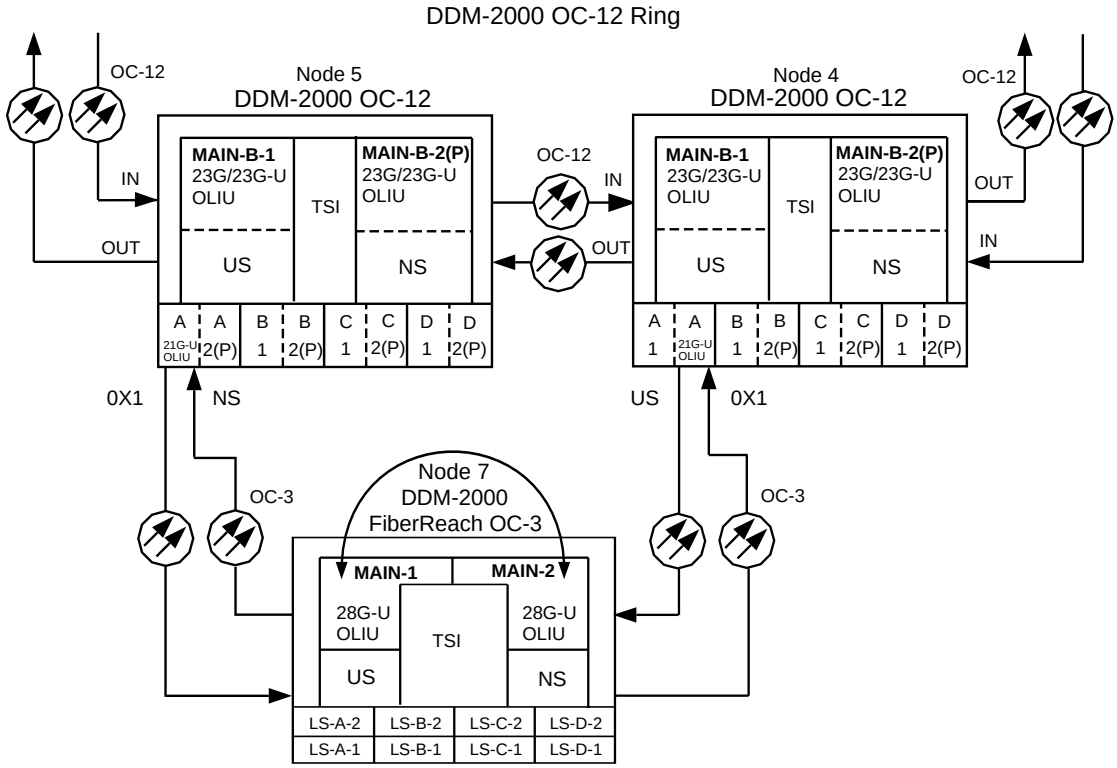

FiberReach Shelf with OC-3 Optics

DDM-2000 FiberReach OC-3 DCC Network Side (NS)/User Side (US) Defaults (set-fecom:nsus=ns/us)		
28-Type OLIUs	**MAIN-1** dcc-m1	**MAIN-2** dcc-m2
	US	NS

tpa 852399/01

Figure 3 – Example 1 of User Side/Network Side Value Settings

DDM-2000 OC-12 DCC Network Side (NS)/User Side (US) Defaults (set-fecom:nsus=ns/us)								
21-Type OLIUs (0X1 or video)	**FN-A-1** dcc-a1	**FN-A-2** dcc-a2	**FN-B-1** dcc-b1	**FN-B-2** dcc-b2	**FN-C-1** dcc-c1	**FN-C-2** dcc-c2	**FN-D-1** dcc-d1	**FN-D-2** dcc-d2
	NS	US	NS	US	NS	US	NS	US
23-Type OLIUs	**MAIN-B-1** dcc-mb1		**MAIN-B-2(P)** dcc-mb2					
	US		NS					

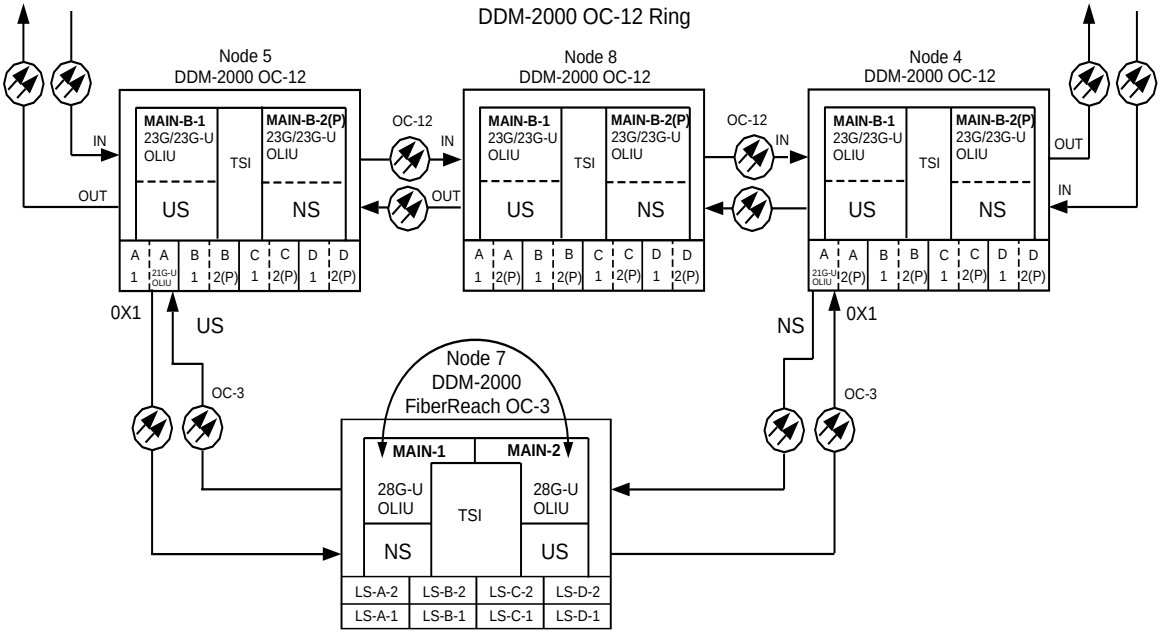

FiberReach Shelf with OC-3 Optics

DDM-2000 FiberReach OC-3 DCC Network Side (NS)/User Side (US) Defaults (set-fecom:nsus=ns/us)		
28-Type OLIUs	**MAIN-1** dcc-m1	**MAIN-2** dcc-m2
	US	NS

Figure 4 – Example 2 of User Side/Network Side Value Settings

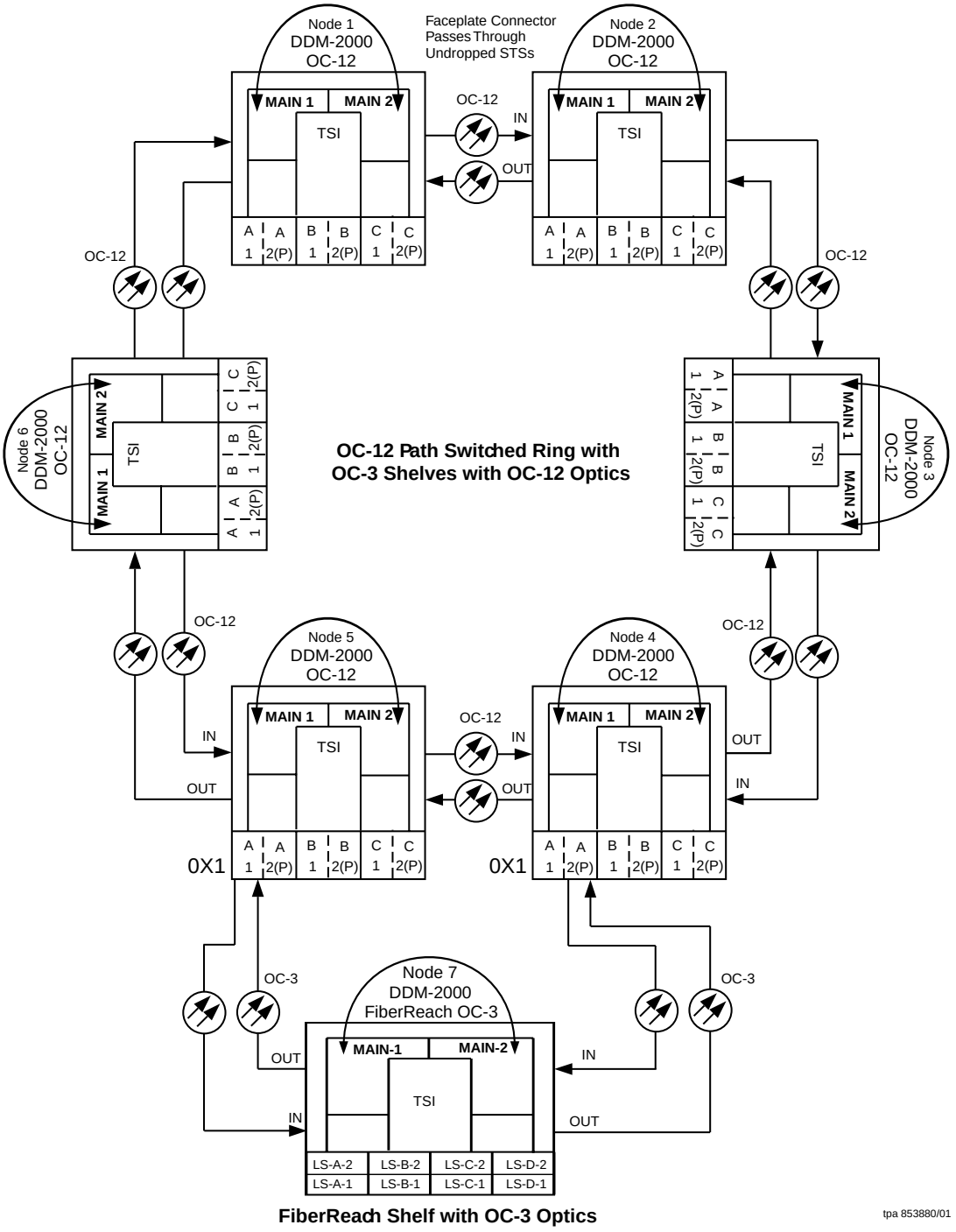

Figure 5 – Example Dual-Homed OC-3/OC-12 Ring Configuration

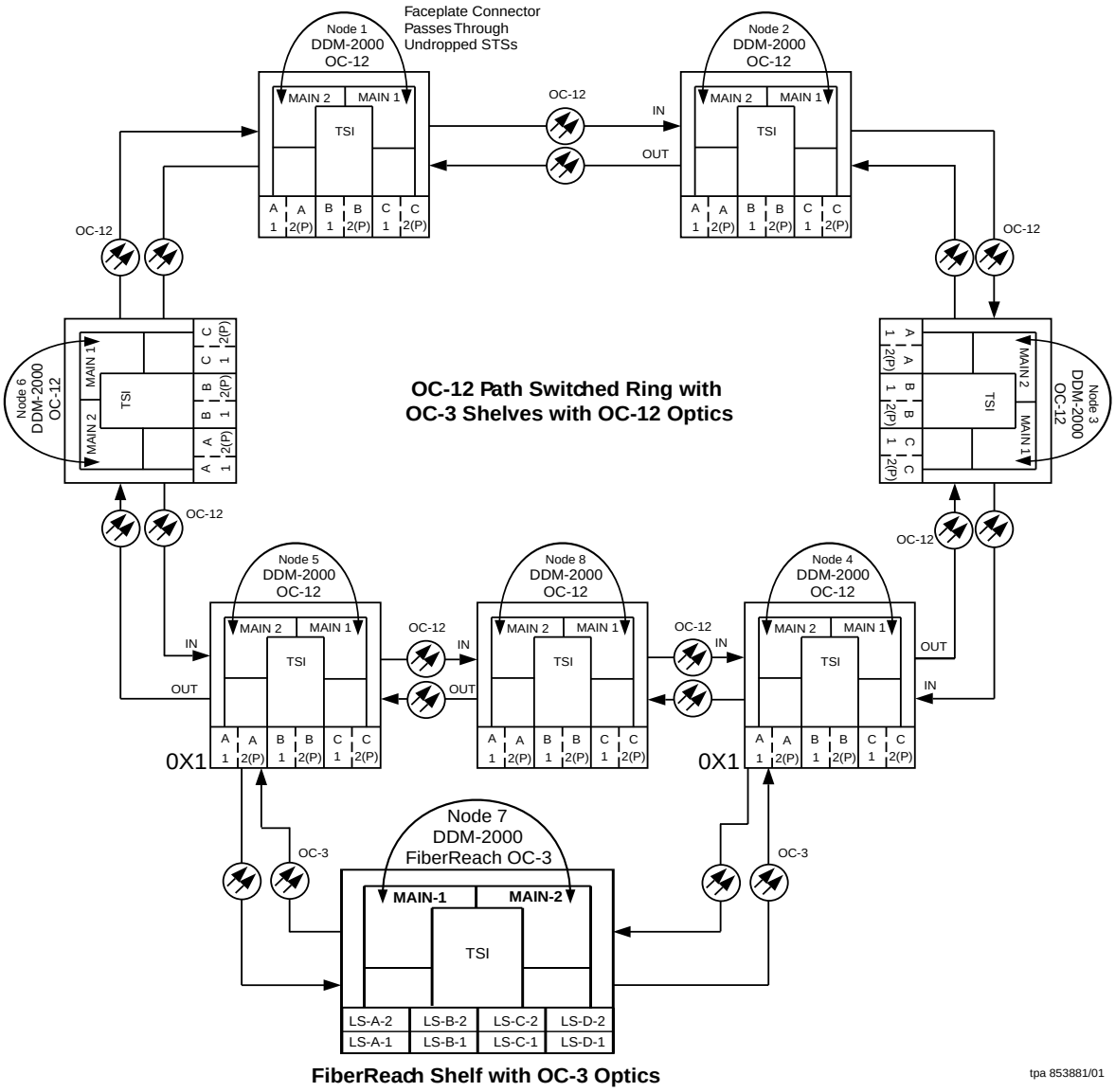

Figure 6 – Example Dual-Homed OC-3/OC-12 Ring Configuration

DDM-2000 OC-12 DCC Network Side (NS)/User Side (US) Defaults (set-fecom:nsus=ns/us)						
22-Type OLIUs (0X1)	**FN-A-1** dcc-a1	**FN-A-2** dcc-a2	**FN-B-1** dcc-b1	**FN-B-2** dcc-b2	**FN-C-1** dcc-c1	**FN-C-2** dcc-c2
	NS	US	NS	US	NS	US
29-Type OLIUs	**MAIN-1** dcc-m1	**MAIN-2** dcc-m2				
	US	NS				

OC-12 Path Switched Ring with OC-3 Shelves with OC-12 Optics

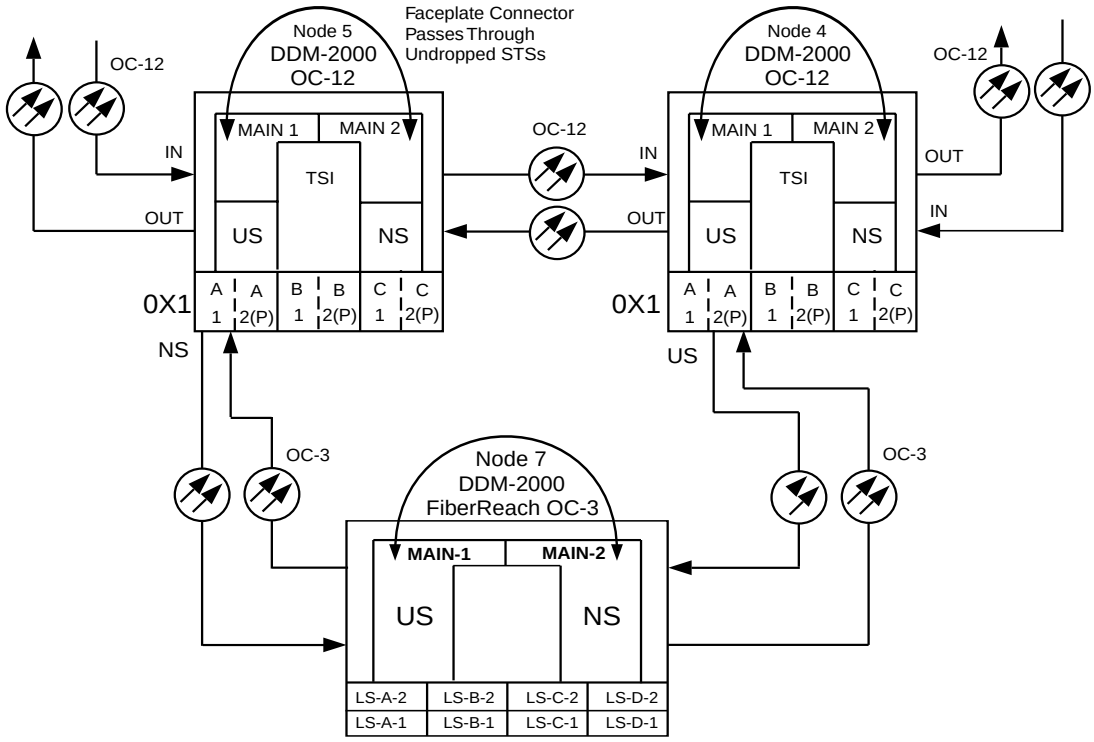

FiberReach Shelf with OC-3 Optics

DDM-2000 FiberReach OC-3 DCC Network Side (NS)/User Side (US) Defaults (set-fecom:nsus=ns/us)		
28-Type OLIUs	**MAIN-1** dcc-m1	**MAIN-2** dcc-m2
	US	NS

tpa 853882/01

Figure 7 – Example 3 of User Side/Network Side Value Settings

DDM-2000 OC-12 DCC Network Side (NS)/User Side (US) Defaults (set-fecom:nsus=ns/us)						
22-Type OLIUs (0X1)	**FN-A-1** dcc-a1	**FN-A-2** dcc-a2	**FN-B-1** dcc-b1	**FN-B-2** dcc-b2	**FN-C-1** dcc-c1	**FN-C-2** dcc-c2
	NS	US	NS	US	NS	US
29-Type OLIUs	**MAIN-1** dcc-m1	**MAIN-2** dcc-m2				
	US	NS				

OC-12 Path Switched Ring with OC-3 Shelves with OC-12 Optics

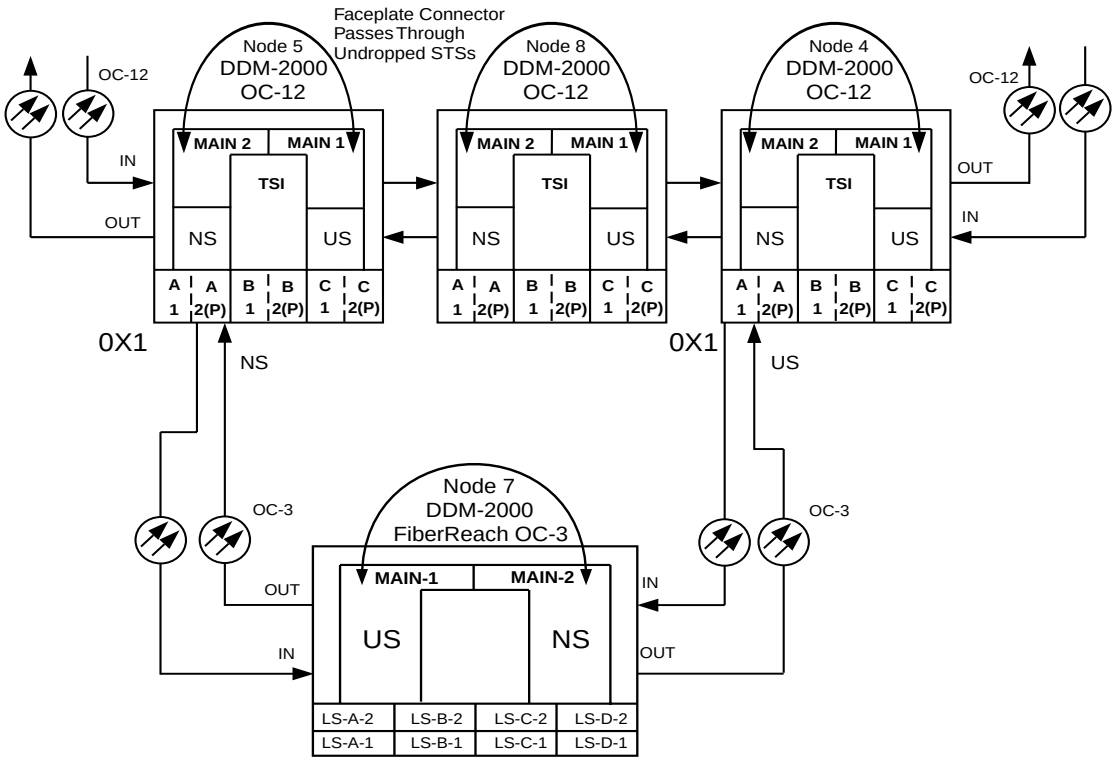

FiberReach Shelf with OC-3 Optics

DDM-2000 FiberReach OC-3 DCC Network Side (NS)/User Side (US) Defaults (set-fecom:nsus=ns/us)		
28-Type OLIUs	**MAIN-1** dcc-m1	**MAIN-2** dcc-m2
	US	NS

tpa 853883/01

Figure 8 – Example 4 of User Side/Network Side Value Settings

Add New DDM-2000 FiberReach OC-3 or OC-12 Node To an OC-3 or OC-12 Ring

DO ITEMS BELOW IN ORDER LISTED . . . . FOR DETAILS, GO TO

1. **CAUTION:**
DDM-2000 circuit packs contain static sensitive components which can be damaged by electrostatic discharge. A static ground wrist strap must be worn when handling the circuit packs. See electrostatic discharge considerations in ***Trouble Clearing: TAD-100****.*

NOTE:
This procedure assumes that the DDM-2000 is in service and a new FiberReach node operating at an OC-3 or OC-12 rate is being added to the Path Switched OC-3 or OC-12 Ring configuration. (See Figure 1.)

NOTE:
It is assumed that optical loops are installed on the new shelf, that the new shelf has been properly equipped and tested in a looped-back configuration, and that the proper release of software has been loaded. [DDM-2000 FiberReach **System Turnup: NTP-007**.]

NOTE:
All shelves in the same network must have the same or compatible software releases.

NOTE:
This procedure requires information from other sites in the network, either through remote modem connection or by having a technician at the neighboring site.

NOTE:
FiberReach nodes operating at an OC-3 rate require two **28-Type OLIU**s in the **MAIN** slots of the FiberReach shelf.

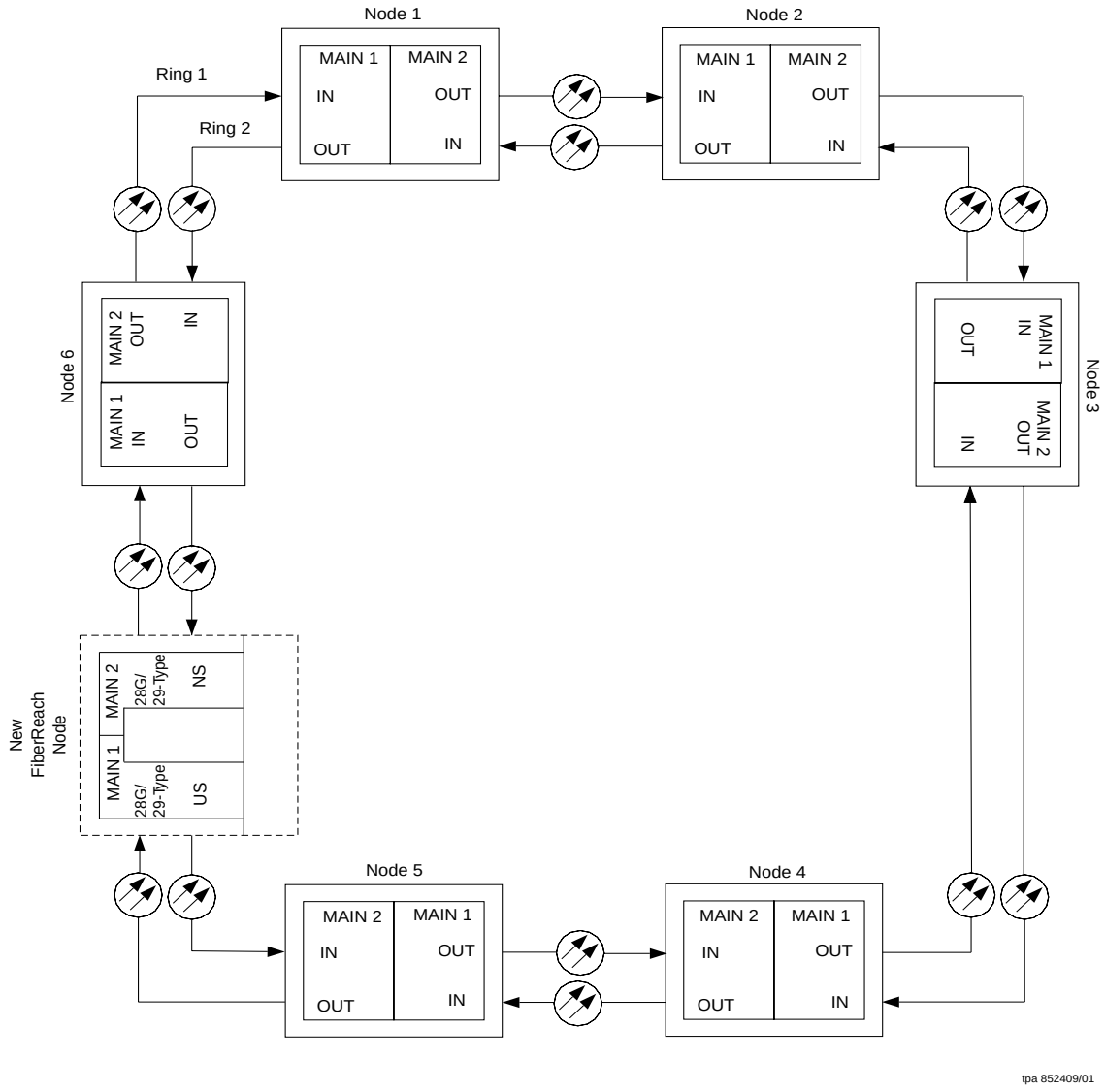

Figure 1 – Adding an RT (Node) to an Existing OC-3 or OC-12 Ring Network

DO ITEMS BELOW IN ORDER LISTED . . . . FOR DETAILS, GO TO

NOTE:
FiberReach nodes operating at an OC-12 rate require two **29-Type OLIU**s in the **MAIN** slots of the FiberReach shelf.

NOTE:
The **28-Type** and **29-Type OLIU**s require a faceplate interconnect cable assembly, [comcode 847721271].

NOTE:
If the DDM-2000 fails to respond in the indicated manner, refer to **Trouble Clearing: IXL-001**.

Use the **`rtrv-alm`** command to verify that no alarms, locks, loops, or switches are present.

2. Notify maintenance center that alarms will be generated.

3. **NOTE:**
It may be helpful to make a sketch of the network to visualize the cross-connections required.

Use **`rtrv-map-network:`** and **`rtrv-map-neighbor:`** commands to determine systems (sites) in the network and how they are connected to each other.

4. From office records or by using the **`rtrv-crs-vt1:all`** or **`rtrv-crs-sts1:all`** command at any site, determine the existing cross-connections.

5. **CAUTION:**
Critical or Major alarms will be generated if pass-through cross-connections are not made on the new shelf before splicing it into the network.

DO ITEMS BELOW IN ORDER LISTED . . . . . FOR DETAILS, GO TO

NOTE:
In ring configurations, you should use the following rules in establishing cross-connections in each ring:

1. All drop connections (including DRI, if present) from the same STS-1 timeslot must be provisioned the same, either all VT1.5 or STS-1.
2. If all 28 VT1.5s (DS1s) in an STS-1 are being passed through at a node in a VT1.5 path-switched ring, then the cross- connection may be provisioned as either a pass-through STS-1 or VT1.5. However, if you anticipate dropping VT1.5s from the pass-through node in the future, you should provision the pass-throughs as VT1.5 cross-connections.
3. On STS-1 path-switched rings, all nodes in the ring must be provisioned as STS-1 cross-connections.

NOTE:
Up to 84 DS1s may be terminated in a ring network. Once a DS1 is terminated, that timeslot must be reserved in both directions around the ring to the far end. Therefore, if a DS1 is terminated (cross-connected) to a function group on a near-end and far-end terminating shelf, it must also be pass-through cross-connected in every shelf in the network. See "Cross-Connection Provisioning" in the "Administration and Provisioning" section of this manual for more information on cross connections.

Use the **`ent-crs-vt1:`** or **`ent-crs-sts1:`** command at the new shelf to make all required *pass-through* cross-connections (for example, **`ent-crs-vt1:m-1-1-1,m-1-1-1`** or **`ent-crs-sts1:m-1,m-1`**). Pass-through cross-connections must be made at the new shelf to correspond to each terminating cross- connection present on every shelf in the ring network. (See Figure 1.)

DO ITEMS BELOW IN ORDER LISTED . . . . FOR DETAILS, GO TO

6. **NOTE:**
If Kbyte or Sbyte (sync messaging) is enabled for the OC-3/OC-12 **`MAIN-1`** and **`MAIN-2`** optical interfaces at any node in the OC-3/OC-12 ring, it **must** be enabled at all nodes in the OC-3/OC-12 ring.

NOTE:
The **`rtrv-oc3:`** or **`rtrv-oc12:`** command retrieves the `OC-3 Line Provisioning Report` or `OC-12 Line Provisioning Report.` This report displays the provisioned configuration of OC-3/OC-12 lines. See the "Commands and Reports" section of this manual for a description of the **`rtrv-oc3:`** or **`rtrv-oc12:`** command format.

Use the **`rtrv-oc3:`** or **`rtrv-oc12:`** command to obtain the `OC-3 Line Provisioning Report` or `OC-12 Line Provisioning Report` and verify if Kbyte/Sbyte is enabled. Use the **`set-oc3:`** or **`set-oc12:`** command to enable the Kbyte/Sbyte parameter, if required.

---

7. **NOTE:**
If Sync Autoreconfiguration is enabled, Kbyte/Sbyte must also be enabled.

NOTE:
If Sync Autoreconfiguration is enabled at any line-timed node in a ring, it **must** be enabled at all line-timed nodes of a ring.

NOTE:
The **`rtrv-sync:`** command retrieves the `Synchronization Report.` This report displays the provisioning and operational information on the synchronization attributes of the DDM-2000. See the "Commands and Reports" section of this manual for a description of the **`rtrv-sync:`** command format.

Use the **`rtrv-sync:`** command to obtain the `Synchronization Report` and verify if Sync Autoreconfiguration is enabled. Use the **`set-sync:`** command to enable the Sync Autoreconfiguration parameter, if required.

DO ITEMS BELOW IN ORDER LISTED . . . . FOR DETAILS, GO TO

8. **WARNING:**
Unterminated optical connectors may emit invisible laser radiation. Eye damage may occur if beam is viewed directly or with improper optical instruments. Avoid direct exposure to the beam.

CAUTION:
An automatic protection switch service hit may occur when the correct optical fibers are cut. Cutting the wrong fiber lines will cause a service interruption.

At the point where the new DDM-2000 shelf will be added, use local procedures to cut the two fiber lines connecting existing shelves and condition the fiber for connection to the new shelf.

---

9. **NOTE:**
Cutting the main sync source will cause the line-timed node to go into *holdover*.

Verify that only `minor nsa OC-3/OC-12 LOS` and `nsa inc. VT/STS1 AIS` alarms are present at each end of the fiber cut.

---

10. **NOTE:**
If line timing mode is specified or external timing mode is specified but the timing reference was not available at the OC-3/OC-12 shelf turnup, the **TGS/TG3** option switches are probably set for *free running*. Before this configuration is established, the specified timing mode must be set on the **TGS/TG3** circuit packs.

NOTE:
If the option switch setting is changed, an update must be done by momentarily depressing the **UPD/INIT** button on the **SYSCTL** after the **TGS/TG3** circuit packs are reinstalled.

DO ITEMS BELOW IN ORDER LISTED . . . . FOR DETAILS, GO TO

NOTE:
If external timing is selected and the **NE ACTY** LED remains lighted after the **TGS/TG3** circuit pack is reinserted, use the CIT and the **`rtrv-sync`** command to check the operational mode of the system. If the mode is `Holdover` instead of `External`, check that the incoming timing references are connected. Also check `Mode Switching` (revertive or nonrevertive) and the external `DS1 Line Code/Format` switch settings.

Set timing mode on OC-12 **TGS/TG3** circuit packs to the timing mode specified in work order or office records. (363-206-295, *DDM-2000 OC-12 Multiplexer, TARP Release 7, User/Service Manual (TOP) - Volume II*, **DLP- 510** or 363-206-285, *DDM-2000 OC-3 Multiplexer, TARP Release 13 and Later, User/Service Manual (TOP) - Volume II*, **DLP- 513**)

11. Use the **`set-sync:`** command to provision the synchronization mode switching, synchronization source, and output mode of timing signals when the **28-Type** or **29-Type OLIU**s hardware is provisioned to be line-timed. See the “Commands and Reports” section of this manual for a description of the **`set-sync:`** command format.

12. **NOTE:**
    The Network Side/User Side parameters of the **`set-fecom:`** command must be set opposite at each end of the optical spans.

    Use the **`rtrv-fecom/set-fecom`** command to verify/set "Network Side/User Side" parameters at each end of optical span being established.

13. At new shelf, remove **OLIU** optical loops.

14. Determine the optical loss of the optical facility from office records or by making the required measurements.

DO ITEMS BELOW IN ORDER LISTED. . . . . FOR DETAILS, GO TO

15. Connect one pair of optical fibers from an adjacent shelf to new FiberReach shelf **MAIN-1 OLIU**. Ensure that you connect the fibers correctly [From adjacent OC-3/OC-12 shelf **MAIN 2(P) OLIU** or FiberReach shelf **MAIN-2 OLIU** to new OC-3/OC-12 shelf **MAIN 1 OLIU** or FiberReach shelf **MAIN-1 OLIU**]. **DLP-514**

16. **NOTE:**
    If the report in this step indicates wrong fiber connections or no connection, verify that *fecom* is ON (**`rtrv-fecom:`**) and check fiber integrity.

    Use **`rtrv-map-neighbor:`** command to verify proper fiber connections have been made to the adjacent node.

17. Connect one pair of optical fibers from an adjacent shelf to new FiberReach shelf **MAIN-2 OLIU**. Ensure that you connect the fibers correctly [From adjacent OC-3/OC-12 shelf **MAIN 1 OLIU** or FiberReach **MAIN-1 OLIU** to new OC-3/OC-12 shelf **MAIN 2(P) OLIU** or FiberReach shelf **MAIN-2 OLIU** shelf. **DLP-514**

18. **NOTE:**
    If the report in this step indicates wrong fiber connections or no connection, verify that *fecom* is ON (**`rtrv-fecom:`**) and check fiber integrity.

    Use **`rtrv-map-neighbor:`** command to verify proper fiber connections have been made to the adjacent node.

19. Verify that all alarm and status conditions clear. If `nsa inc. VT AIS` alarm is present and no `inc. OC-3/OC-12 LOS` alarm, check that all pass-through cross-connections have been properly made using the **`rtrv-crs-vt1:`** command. If `nsa inc. STS AIS` alarm is present and no `inc. OC-3/OC-12 LOS` alarm, check that all pass-through cross-connections have been properly made using the **`rtrv-crs-sts1:`** command.

DO ITEMS BELOW IN ORDER LISTED . . . . FOR DETAILS, GO TO

20. Verify no duplicate TID settings exist. The **`rtrv-ne:`** command may be used at each shelf in the network to display settings. If duplicates exist, determine new settings and use the **`set-ne:`** command to make new settings.

---

21. **NOTE:**
OC-3/OC-12 shelves with Release 15 and FiberReach OC-3/OC-12 shelves with Release 4 software support AGNE(s) and alarm groups. OC-12 shelves with Release 7 or 13 and FiberReach OC-3 shelves with Release 3 software do **not** support these features and will **not** appear in the alarm groups of a network with mixed software.

NOTE:
The Remote NE Status (**`rnestat`**) parameter of the **`set-ne:`** command must be enabled prior to designating the AGNE(s) and alarm group numbers.

NOTE:
Shelves may be designated as an alarm gateway network element (AGNE) and assigned an alarm group number. (Default alarm group number is 255.) At least one AGNE is required per alarm group. One primary AGNE and one backup per alarm group is recommmended. For a network greater than 16 nodes, the AGNE and TL1 GNE should be on separate nodes. The AGNE parameter of the **`set-ne:`** command may have been set to yes on each new shelf during shelf turnup procedures to suppress an `AGNE communication failure` alarm.

Use the **`set-ne:`** command to designate the AGNE(s) and alarm group numbers, as required.

DO ITEMS BELOW IN ORDER LISTED . . . . . FOR DETAILS, GO TO

22. **NOTE:**
Shelves that are part of a subnetwork being partitioned into multiple areas require that the NSAP*AREA* field and level 2 IS-IS routing parameters of the **`ent-ulsdcc-l3`** command be set. See Section 11 “Commands and Reports” in 363-206-285, *DDM-2000 OC-3 Multiplexer, TARP Release 13 and Later, User/Service Manual - Volume I* and this manual, for an explanation of the command parameters and 824-102-144, *Lucent Technologies 2000 Product Family, Operations Interworking Guide for TARP Releases*, for an explanation of the engineering rules for subnetworking partitioning.

Use the **`ent-ulsdcc-l3`** command to designate the NSAP*AREA* field and level 2 IS-IS routing, as required.

---

23. Perform end-to-end OC-3/OC-12 optical line test on optical spans being established. **DLP-515**

---

24. **NOTE:**
Proper cross-connections must be made at each shelf to establish the complete end-to-end path for the DS1/DS3/EC-1 port being tested. After one path (ring1 or ring2) has been tested, use the **`sw-path-( ):`** command at both ends to test the other ring path.

Perform appropriate end-to-end transmission test for the circuits being added, as required. Refer to the DDM-2000 OC-3 User/Service Manual (TOP) for the following procedure

A. Single Ring DS1 Test **DLP-510**

B. Single Ring DS3 Test **DLP-511**

C. Dual Ring Interworking (DRI) DS1 Test in 363-206-285, *DDM-2000 OC-3 Multiplexer, TARP Release 13 and Later, User/Service Manual (TOP) - Volume II*, **DLP-554**

DO ITEMS BELOW IN ORDER LISTED . . . . FOR DETAILS, GO TO

D. Dual Ring Interworking (DRI) DS3 Test in 363-206-285, *DDM-2000 OC-3 Multiplexer, TARP Release 13 and Later, User/Service Manual (TOP) - Volume II*, **DLP-553**

E. Dual Ring Interworking (DRI) DS3 Test in 363-206-295, *DDM-2000 OC-12 Multiplexer, TARP Release 7, User/Service Manual (TOP) - Volume II*, **DLP-553**

25. The system is ready for initial service to be established.
    Initial DS1 Service [**System Turnup: NTP-004**]
    Initial T1 Service [**System Turnup: NTP-013**]
    Initial HDSL Service [**System Turnup: NTP-017**]
    Initial DS3 Service [**System Turnup: NTP-025**]
    STS-3c Service [**System Turnup: NTP-016**]

Establish Initial End-to-End DS3 Service (Group Equipped But Not In Service)

DO ITEMS BELOW IN ORDER LISTED . . . . FOR DETAILS, GO TO

1. **CAUTION:**
DDM-2000 circuit packs contain static sensitive components which can be damaged by electrostatic discharge. A static ground wrist strap must be worn when handling the circuit packs. See electrostatic discharge considerations in ***Trouble Clearing: TAD-100****.*

NOTE:
The OC-1, OC-3, or OC-12 system must be established before continuing with this procedure. If all nodes of the network have not been equipped and installed, refer to **System Turnup/Circuit Order**: **IXL-001** for procedures to equip the DDM-2000 shelves, and to establish a system.

NOTE:
This procedure assumes that **DS3** circuit packs have already been installed during the initial shelf turnup at the DS3 terminating end(s) of the circuit and **DS3** (FiberReach shelf), **STS1E** (OC-3 shelf), or **3STS1E** (OC-12 shelf) circuit packs have been installed during initial shelf turnup at the other terminating end of the circuit. If the appropriate circuit packets have not been installed and the system is in service on other groups, refer to **System Turnup/Circuit Order**: **IXL-001** in this User/Service Manual for procedures to add a new DS3 group for DS3 service.

NOTE:
If the DDM-2000 fails to respond in the indicated manner, refer to **Trouble Clearing: IXL-001**.

At the DS3 terminating node(s) of the circuit being established, determine which DS3 port is to be put into service and what options are to be selected.

DO ITEMS BELOW IN ORDER LISTED . . . . . FOR DETAILS, GO TO

2. **NOTE:**
   The **`rtrv-eqpt:`** command retrieves the Equipage and Version Report. This report lists the circuit pack type and version information for one or more slots. See the Commands and Reports section of this manual for a description of the **`rtrv-eqpt:`** command.

   Use **`rtrv-eqpt:`** command to obtain the `Equipage and Version Report` and verify that the service and protection (if required) DS3 circuit packs have been installed in the Function Units slots being put into service.

3. **NOTE:**
   The **`rtrv-t3:`** command retrieves the `T3 Port Provisioning Report`. This report lists information about each DS3 port. This information includes attributes set by the **`set-t3:`** command. See the Commands and Reports section of this User/Service Manual for a description of the **`rtrv-t3:`** command.

   Use the **`rtrv-t3:`** command to obtain the `T3 Port Provisioning Report` and verify the software option settings.

4. Verify the line build out (LBO) option jumpers are installed as required and reinstall **DS3** circuit packs. **DLP-513**

5. Make the appropriate cable connection(s) to the DS3 cross-connect point(s) or equivalent connection point(s) for the circuit being added.

6. Verify that no LEDs or alarms are activated. If any LEDs or alarms are activated, refer to **Trouble Clearing: IXL-001** and follow the appropriate trouble clearing procedure.

7. If one of the terminating nodes is equipped with **STS1E** or **3STS1E** circuit packs for an EC-1 interface to support DS3 services being established, establish initial EC-1 low speed interface in 363-206-285, *DDM-2000 OC-3 Multiplexer, TARP Release 13 and Later, User/Service Manual (TOP) - Volume II*, **NTP-034** or 363-206-295, *DDM-2000 OC-12 Multiplexer, TARP Release 7, User/Service Manual (TOP) - Volume II*, **NTP-023**.

DO ITEMS BELOW IN ORDER LISTED . . . . FOR DETAILS, GO TO

8. **NOTE:**
Ring releases support only manual VT1.5 and STS-1 cross-connections. manual STS-1 and/or DS1 cross-connections have to be made at each shelf to configure the transmission path for each DS3/DS1 circuit being established. Either terminating (drop) cross-connections or “drop and continue” cross-connections are made at intermediate nodes.

NOTE:
In ring configurations, you should use the following rules in establishing cross-connections in each ring:

1. All drop connections (including DRI, if present) from the same STS-1 timeslot must be provisioned the same, either all VT1.5 or STS-1.
2. If all 28 VT1.5s (DS1s) in an STS-1 are being passed through at a node in a VT1.5 path-switched ring, then the cross- connection may be provisioned as either a pass-through STS-1 or VT1.5. However, if you anticipate dropping VT1.5s from the pass-through node in the future, you should provision the pass-throughs as VT1.5 cross-connections.
3. On STS-1 path-switched rings, all nodes in the ring must be provisioned as STS-1 cross-connections.

NOTE:
The following commands may be used to delete, enter, and retrieve STS-1 cross connections in a path protected ring network: **`dlt-crs-sts1`**, **`ent-crs-sts1`**, and **`rtrv-crs-sts1`**. See the Commands and Reports section of this User/Service Manual for a description of commands

Determine the necessary STS-1 cross connections for each node from the work order or circuit order

DO ITEMS BELOW IN ORDER LISTED . . . . . FOR DETAILS, GO TO	
9. Make necessary STS-1 cross-connections for each node in the network.	
A. Single-Ring Configuration	**DLP-518**
B. Single/Dual OC-48 or OC-192/OC-3 or OC-12 Configuration	**DLP-530**
C. Single/Dual OC-12/OC-3 Configuration	**DLP-535**
D. Single/Dual OC-3 or OC-12/OC-1 Configuration	**DLP-526**
E. Dual Ring Interworking (DRI) Configuration in 363-206-285, *DDM-2000 OC-3 Multiplexer, TARP Release 13 and Later, User/Service Manual (TOP) - Volume II*, **DLP-550**	
F. Dual Ring Interworking (DRI) Configuration in 363-206-295, *DDM-2000 OC-12 Multiplexer, TARP Release 7, User/Service Manual (TOP) - Volume II*, **DLP-549**	

DO ITEMS BELOW IN ORDER LISTED . . . . FOR DETAILS, GO TO

10. **NOTE:**
For a DS3 circuit in a path protected ring network, the **`sw-path-sts1:`** address command must be used at the terminating nodes [and dual ring interworking (DRI) nodes in a DRI ring network] to switch the active STS-1 (DS3) path to repeat this test on the other path(s).

Perform DS3 end-to-end transmission test for each circuit being put into service (optional).

A. Single-Ring Configuration **DLP-545**

B. Single/Dual Homing Ring Configuration **DLP-545**

C. Dual Ring Interworking (DRI) Configuration in 363-206-285, *DDM-2000 OC-3 Multiplexer, TARP Release 13 and Later, User/Service Manual (TOP) - Volume II*, **DLP-553**

D. Dual Ring Interworking (DRI) Configuration in 363-206-295, *DDM-2000 OC-12 Multiplexer, TARP Release 7, User/Service Manual (TOP) - Volume II*, **DLP-553**

---

11. Use the **`set-t3:`** command to set the characteristics of the DS3 port of the circuit being established.

---

12. Use the **`rtrv-state-eqpt:`** command to determine the port state of the DS3 port of the circuit being established.

DO ITEMS BELOW IN ORDER LISTED . . . . . FOR DETAILS, GO TO

13. **NOTE:**
If a port is in the *nmon(n)* state, the signal is not monitored or alarmed. The port will not automatically go to the *in service(i)* state when a signal is detected as it will in the *auto(a)* state. In the *nmon* state, the port must be returned to the *auto* state, using the **set-state-t3:** command, to turn on monitoring of signal failures and before any circuit packs associated with that port can be removed from the equipment list by the **upd** command.

Use the s**et-state-t3:** command to set the port state of the DS3 port of the circuit being established.

Discontinue End-to-End DS3 Service

DO ITEMS BELOW IN ORDER LISTED . . . . FOR DETAILS, GO TO

1. **CAUTION:**
   DDM-2000 circuit packs contain static sensitive components which can be damaged by electrostatic discharge. A static ground wrist strap must be worn when handling the circuit packs. See electrostatic discharge considerations in ***Trouble Clearing: TAD-100****.*

   Determine which DS3 group is to be discontinued and verify no alarms exist on the system.

2. **NOTE:**
   The following operation may activate the office critical, major, or minor alarm. The audible alarm may be suppressed by depressing the **ACO** pushbutton (**`opr-aco`** command).

   At the DSX-3/STSX cable cross-connect point at the terminating (drop) nodes, remove the DS3 service (signal) from the DS3 group being discontinued. (**FAULT** LED flashes on **DS3** circuit packs with signal removed).

3. **NOTE:**
   The **UPD/INIT** pushbutton on the **SYSCTL** is recessed to prevent its accidental operation. You will need a small pointed object such as a ball-point pen.

   At the terminating drop nodes, momentarily depress the **UPD/INIT** pushbutton on the **SYSCTL** circuit pack or use the upd command to update the equipment list. (Flashing **FAULT** LEDs go off.)

DO ITEMS BELOW IN ORDER LISTED . . . . . FOR DETAILS, GO TO

4. If a craft interface terminal (CIT) is available, use the **`rtrv-state-eqpt:`** command to verify that the right port has been changed from *in-service(i)* to *auto(a)* state at the terminating nodes.

5. From the work order of **`rtrv-crs-sts1:`** command, determine the cross-connections for the circuit being discontinued. Use the **`rtrv-crs-sts1:`** command at each node in the ring network to obtain the `STS-1 Cross Connect Report`.

6. **CAUTION:**
   Removal of the wrong cross-connect may interrupt service.

   NOTE:
   DS3 slots cannot be unequipped without an alarm until all cross-connections are removed. The cross-connections must be removed first before removing circuit packs. In ring configurations, remove the cross-connections from the terminating (drop) nodes first, then remove the pass-through cross-connections at the non-terminating nodes, if required. A critical alarm may occur when the first cross-connection at the terminating node is deleted and clear when the other terminating cross-connection is deleted.

   NOTE:
   In ring configurations, you should use the following rules in establishing cross-connections in each ring:

   1. All drop connections (including DRI, if present) from the same STS-1 timeslot must be provisioned the same, either all VT1.5 or STS-1.
   2. If all 28 VT1.5s (DS1s) in an STS-1 are being passed through at a node in a VT1.5 path-switched ring, then the cross- connection may be provisioned as either a pass-through STS-1 or VT1.5. However, if you anticipate dropping VT1.5s from the pass-through node in the future, you should provision the pass-throughs as VT1.5 cross-connections.
   3. On STS-1 path-switched rings, all nodes in the ring must be provisioned as STS-1 cross-connections.

DO ITEMS BELOW IN ORDER LISTED . . . . FOR DETAILS, GO TO

NOTE:
The following commands may be used to delete, enter, and retrieve STS-1 cross connections: **`dlt-crs-sts1`**, **`ent-crs-sts1`**, and **`rtrv-crs-sts1`**. See the Commands and Reports section of this User/Service Manual for a description of commands.

At the terminating (drop) nodes, use the **`dlt-crs-sts1:`** command to delete the STS-1 cross connections for the DS3 being discontinued, if required.

7. Use the **`dlt-crs-sts1:`** command to delete the pass-through STS-1 cross connections at each non-terminating node for the DS3 service being removed, if required.

8. Remove the **DS3** circuit packs associated with the Function Units slots being discontinued, if required.

9. **NOTE:**
If a port is in the *nmon(n)* state, the signal is not monitored or alarmed. The port will not automatically go to the *in service(i)* state when a signal is detected as it will in the *`auto(a)`* state. In the *nmon* state, the port must be returned to the *auto* state, using the **`set-state-t3:`** command, to turn on monitoring of signal failures and before any circuit packs associated with that port can be removed from the equipment list by the **upd** command.

   If circuit pack(s) was removed, momentarily depress the **UPD/INIT** pushbutton on the **SYSCTL** or use the **upd** command to update the DDM-2000 internal equipment list.

   If circuit pack(s) was not removed, use **`set-state-t3:`** command to set state of **DS3** circuit pack to “not monitored” (*nmon*).

10. Verify that all alarms go off.

Unused

Unused

Unused

Establish FiberReach OC-3 Release 4 Linear Extension via DDM-2000 OC-3 Release 15 Backbone Ring

DO ITEMS BELOW IN ORDER LISTED . . . . FOR DETAILS, GO TO

1. **WARNING:**
Unterminated optical connectors may emit invisible laser radiation. Avoid direct exposure to the beam. Do not view beam with optical instruments. Use of controls or adjustments or performance of procedures other than those specified herein may result in hazardous radiation exposure.

CAUTION:
DDM-2000 circuit packs contain static sensitive components which can be damaged by electrostatic discharge. A static ground wrist strap must be worn when handling the circuit packs. See electrostatic discharge considerations in **Trouble Clearing: TAD-100***.*

NOTE:
FiberReach nodes operating at an OC-3 rate require two **28-Type OLIU**s in the **MAIN** slots of the FiberReach shelf.

NOTE:
The **28-Type OLIU**s require a faceplate interconnect cable assembly, [comcode 847721271].

NOTE:
If the DDM-2000 fails to respond in the indicated manner, refer to **Trouble Clearing: IXL-001**.

NOTE:
It is also assumed the DDM-2000 OC-3 Release 15 shelves have been equipped and tested, (363-206-285, *DDM-2000 OC-3 Multiplexer, TARP Release 13 and Later, User/Service Manual (TOP)—Volume II),* **System Turnup: NTP-016** and the OC-3 ring has been established, as required, **System Turnup: NTP-022**. It is assumed that all DDM-2000 FiberReach OC-3 shelves in the system have passed the looped transmission test(s), **System Turnup: NTP-007**.

DO ITEMS BELOW IN ORDER LISTED	FOR DETAILS, GO TO
Determine the network configuration (for example, see Figure 1.)	
2. Verify that the host DDM-2000 host OC-3 shelf is equipped with TARP Release 15 ring software. If not equipped with TARP Release 15 software, upgrade the DDM-2000 OC-3 host shelf with proper software. Verify that the DDM-2000 FiberReach OC-3 shelf is equipped with TARP Release 4 ring software.	**DLP-531**
3. Determine the optical loss of each optical span from office records or by making the required measurements.	
4. **NOTE:** The **`rtrv-eqpt:`** command retrieves the `Equipage and Version Report`. This report lists the circuit pack type and version information for one or more slots. See the Commands and Reports section of this manual for a description of the **`rtrv-eqpt:`** command format. **NOTE:** If work order or office records do not specify **OLIU** types, refer to 363-206-200, *DDM-2000 OC-3 and OC-12 Multiplexers, Applications, Planning, and Ordering Guide,* 363-206-300, *DDM-2000 FiberReach Multiplexer, Applications, Planning, and Ordering Guide,* 363-206-285, *DDM-2000 OC-3 Multiplexer, TARP Release 13 and Later, User/Service Manual—Volume I,* and/or 363-206-305, *FiberReach Multiplexer, Wideband/Narrowband Shelf, TARP Release 3 and Later, User/Service Manual—Volume I* for a for a description of **OLIU** circuit packs and applications. Optical line power measurements and/or office records must be used to verify that the span length can be supported. At the host OC-3 node, verify/install **OLIU** circuit packs in **FUNCTION UNITS** slots (**A**, **B**, or **C**) being used for linear extension OC-3 access.	

DO ITEMS BELOW IN ORDER LISTED . . . . FOR DETAILS, GO TO

5. **NOTE:**
   If fecom is enabled, an `inconsistent DCC values` alarm will occur when the **OLIU**s are looped back. Normally, the alarm occurs when the user/network parameters on the **OHCTL**s at both ends of the DCC are set the same. To clear the alarm during a fiber loopback, use the **`set-fecom:`***`address`***`:com=disable`** command to disable the DCC.

   At host OC-3 shelf, connect optical loops for **FUNCTION UNITS OLIU**s just installed.

6. **NOTE:**
   The Network Side (NS)/User Side (US) parameters of the **`set-fecom:`** command must be set opposite at each end of the optical spans. For example, see Figure 2.

   Use the **`rtrv-fecom/set-fecom`** command to verify/set Network Side/User Side parameters at each end of optical span being established.

7. Use the **`rtrv-oc3/set-oc3`** command at the host OC-3 shelf to verify/set application (*app*) parameter for the OC-3 **FUNCTION UNITS** slots being used for this OC-3 linear extension. For example, **`set-oc3:fn-a,app=`***`1+1`*.

8. Use the **`rtrv-oc3/set-oc3`** command at the remote FiberReach OC-3 shelf to verify/set application (*dcc*) parameter for the OC-3 **MAIN** slots being used for this OC-3 linear extension. For example,
   `set-oc3:main-1,dcc=`*`identical`* and
   `set-oc3:main-2,dcc=`*`identical`*.

9. **NOTE:**
   If line timing mode is specified or external timing mode is specified but the timing reference was not available at the host OC-3 shelf turnup, the **TGS/TG3** option switches are probably set for *free running*. Before this configuration is established, the specified timing mode must be set on the **TGS/TG3** circuit packs.

DO ITEMS BELOW IN ORDER LISTED . . . . . FOR DETAILS, GO TO

NOTE:
If the option switch setting is changed, an update must be done by momentarily depressing the **UPD/INIT** button on the **SYSCTL** after the **TGS/TG3** circuit packs are reinstalled.

NOTE:
If external timing is selected and the **NE ACTY** LED remains lighted after the **TGS/TG3** circuit pack is reinserted, use the CIT and the **`rtrv-sync`** command to check the operational mode of the system. If the mode is `Holdover` instead of `External`, check that the incoming timing references are connected. Also check `Mode Switching` (revertive or nonrevertive) and the external `DS1 Line Code/Format` switch settings.

Set timing mode on **TGS/TG3** circuit packs in host OC-3 shelf to the timing mode specified in work order or office records. (363-206-285, *DDM-2000 OC-3 Multiplexer, TARP Release 13 and Later, User/Service Manual (TOP) - Volume II*, **DLP-513**)

---

10. **NOTE:**
If Kbyte or Sbyte (sync messaging) is enabled for the OC-3 **MAIN 1** and **MAIN 2(P)** optical interfaces at any node in the OC-3 ring, it **must** be enabled at all nodes in the OC-3 ring and in the **FUNCTION UNITS** slots of the host OC-3 shelf. It must be enabled for the FiberReach linear extension OC-3 shelf **MAIN-1** and **MAIN-2** optical interfaces.

NOTE:
The **`rtrv-oc3:`** command retrieves the `OC-3 Line Provisioning Report`. This report displays the provisioned configuration of OC-3 lines. See the Commands and Reports section in Volume I of this manual and 363-206-285, *DDM-2000 OC-3 Multiplexer, TARP Release 13 and Later, User/Service Manual—Volume I* for a description of the **`rtrv-oc3:`** command format.

Use the **`rtrv-oc3:`** command to obtain the `OC-3 Line Provisioning Report` and verify if Kbyte/Sbyte is enabled. Use the **`set-oc3:`** command to enable the Kbyte/Sbyte parameter, if required.

DO ITEMS BELOW IN ORDER LISTED . . . . FOR DETAILS, GO TO

11. **NOTE:**
If Sync Autoreconfiguration is enabled, Kbyte/Sbyte must also be enabled.

NOTE:
The **`rtrv-sync:`** command retrieves the `Synchronization Report`. This report displays the provisioning and operational information on the synchronization attributes of the DDM-2000. See the Commands and Reports section in Volume I of this manual and 363-206-285, *DDM-2000 OC-3 Multiplexer, TARP Release 13 and Later, User/Service Manual—Volume I* for a description of the **`rtrv-sync:`** command format.

Use the **`rtrv-sync:`** command to obtain the `Synchronization Report` and verify if Sync Autoreconfiguration is enabled. Use the **`set-sync:`** command to enable the Sync Autoreconfiguration parameter, if required.

---

12. **NOTE:**
Two or more shelves in the same network **cannot** have the same system name or TID (set by the **`set-ne:`** command).

Verify no duplicate TID settings exist. The **`rtrv-ne:`** command may be used at each shelf in the network to display settings. If duplicates exist, determine new settings and use the **`set-ne:`** command to make new settings.

DO ITEMS BELOW IN ORDER LISTED . . . . FOR DETAILS, GO TO

13. **NOTE:**
The Remote NE Status (**`rnestat`**) parameter of the **`set-ne:`** command must be enabled prior to designating the AGNE(s) and alarm group numbers.

NOTE:
Shelves may be designated as an alarm gateway network element (AGNE) and assigned an alarm group number. (Default alarm group number is 255.) At least one AGNE is required per alarm group. One primary AGNE and one backup per alarm group is recommmended. For a network greater than 16 nodes, the AGNE and TL1 GNE should be on separate nodes. The AGNE parameter of the **`set-ne:`** command may have been set to yes on each new shelf during shelf turnup procedures to suppress an `AGNE communication failure` alarm.

Use the **`set-ne:`** command to designate the AGNE(s) and alarm group numbers, as required.

---

14. **NOTE:**
Only **one** remote FiberReach OC-3 shelf is allowed in this linear-extension configuration.

NOTE:
This OC-3 linear extension requires that the **FUNCTION UNITS ( ) 1 OLIU** on the host OC-3 shelf connect to the **MAIN-1 OLIU** at the FiberReach OC-3 shelf. **MAIN-2 OLIU** at the FiberReach OC-3 shelf (node) connects to **FUNCTION UNITS ( ) 2(P) OLIU** on the host OC-3 shelf. See Figure 1. This procedure will establish the OC-3 linear extension starting from the host OC-3 node to the FiberReach OC-3 node and back to the host OC-3 node.

At the near end, remove the optical loop from the **OLIU** (for example in Figure 1, Node 5 OC-3 shelf **FUNCTION UNITS A 1**) associated with the optical span being established. At the other end of the optical span, remove the optical loop from the associated **28-Type OLIU** (for example, in Figure 1, Node 7 FiberReach OC-3 shelf **MAIN-1 OLIU**).

DO ITEMS BELOW IN ORDER LISTED . . . . FOR DETAILS, GO TO

15. **NOTE:**
The section data communication channel (DCC), used for far end communications, must be enabled at each network element (shelf) optical interface being tested in order for the end-to-end line tests to work. Default condition for the DCC channel is "enabled". If it has been disabled, use the **`set-fecom:`** command **at each shelf** to enable far end communications.

At each shelf, use the **`set-fecom:`***`address`***`:com=enabled`** command to ensure far end communications (fecom) is enabled.

---

16. Perform optical fiber connections and verification of the integrity of the optical span being established. **DLP-514**

---

17. **NOTE:**
Shelves that are part of a subnetwork being partitioned into multiple areas require that the NSAP*AREA* field and level 2 IS-IS routing parameters of the **`ent-ulsdcc-l3:`** command be set. See Section 11, Commands and Reports in Volume I of this manual and 363-206-285, *DDM-2000 OC-3 Multiplexer, TARP Release 13 and Later, User/Service Manual—Volume I*, for an explanation of the command parameters and 824-102-144, *Lucent Technologies 2000 Product Family, Operations Interworking Guide For TARP Releases*, for an explanation of the engineering rules for subnetwork partitioning.

Use the **`ent-ulsdcc-l3:`** command to designate the NSAP*AREA* field and level 2 IS-IS routing, as required.

---

18. **NOTE:**
The **`rtrv-pm-line:`** command in the following procedure displays performance monitoring data associated with the OC-3 lines terminated on the system.

Perform end-to-end OC-3 line test. **DLP-515**

DO ITEMS BELOW IN ORDER LISTED . . . . . FOR DETAILS, GO TO

19. Repeat this procedure for all OC-3 optical spans being established in the DDM-2000 OC-3 network. Ensure that the last optical span connected to the OC-3 host shelf is connected to an **OLIU** in the opposite slot as the one in the first OC-3 span (for example, slot **1** for the first span and slot **2(P)** for the second span).

20. **NOTE:**
    Establishing service requires that the proper slots in each terminating node be properly equipped with the correct circuit pack(s) for the type of service being established. It also requires numerous cross connections in each of the nodes representing the path of the required service. Additionally, transmission tests should be performed to verify the continuity and quality of the established circuit.

    The OC-3 linear extension is now ready for initial service to be established.
    Initial DS1 Service [**System Turnup: NTP-004**]
    Initial T1 Service [**System Turnup: NTP-013**]
    Initial HDSL Service [**System Turnup: NTP-017**]
    Initial DS3 Service [**System Turnup: NTP-025**]
    STS-3c Service [**System Turnup: NTP-016**]

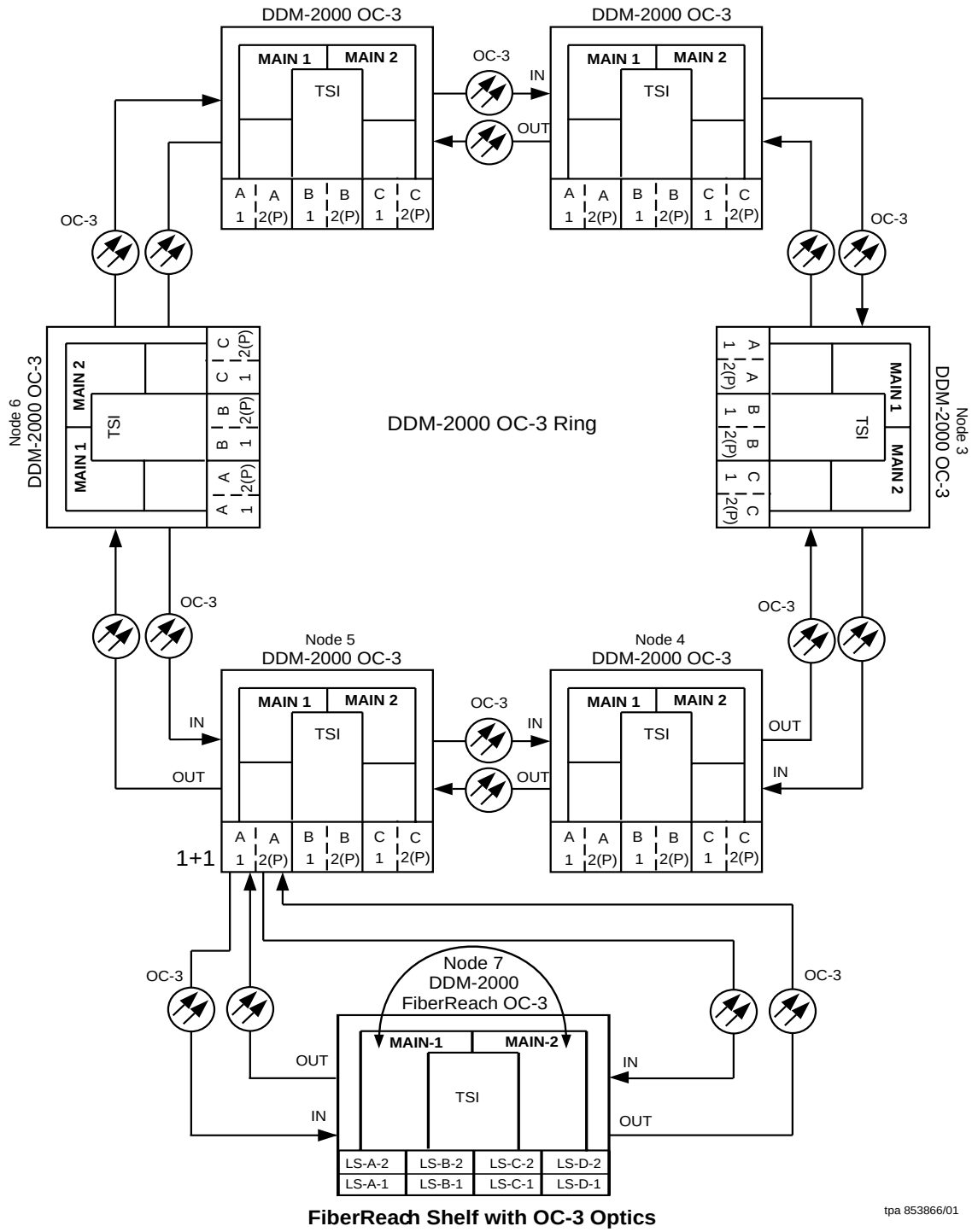

Figure 1 – Example OC-3 Linear Extension Connections

DDM-2000 OC-3 DCC Network Side (NS)/User Side (US) Defaults (set-fecom:nsus=ns/us)								
22-Type OLIUs (0X1 or 1+1)	**MAIN-1** dcc-m1	**MAIN-2** dcc-m2	**FN-A-1** dcc-a1	**FN-A-2** dcc-a2	**FN-B-1** dcc-b1	**FN-B-2** dcc-b2	**FN-C-1** dcc-c1	**FN-C-2** dcc-c2
	US	NS	NS	US	NS	US	NS	US

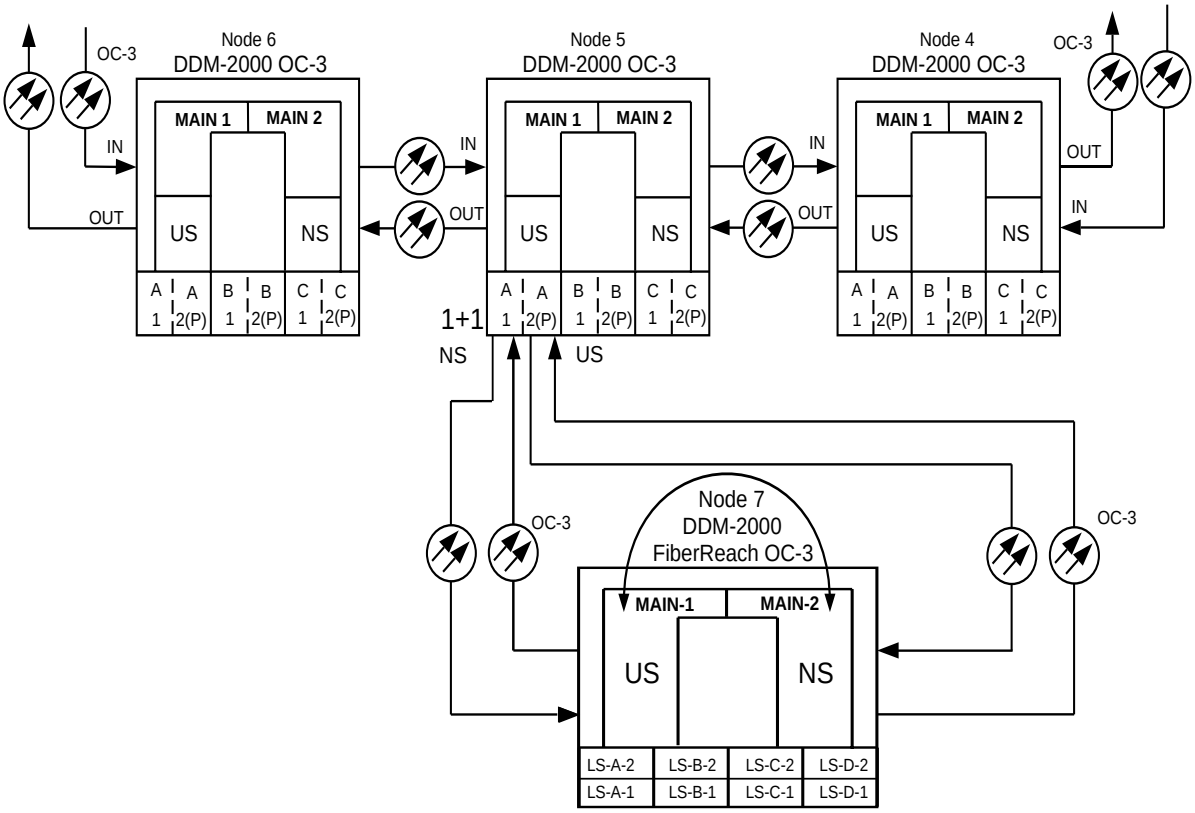

FiberReach Shelf with OC-3 Optics

DDM-2000 FiberReach OC-3 DCC Network Side (NS)/User Side (US) Defaults (set-fecom:nsus=ns/us)		
28-Type OLIUs	**MAIN-1** dcc-m1	**MAIN-2** dcc-m2
	US	NS

tpa 853865/01

Figure 2 – Example of User Side/Network Side Value Settings

Establish FiberReach OC-3 Release 4 Linear Extension via DDM-2000 OC-12 Backbone Ring

DO ITEMS BELOW IN ORDER LISTED . . . . FOR DETAILS, GO TO

1. **WARNING:**
Unterminated optical connectors may emit invisible laser radiation. Avoid direct exposure to the beam. Do not view beam with optical instruments. Use of controls or adjustments or performance of procedures other than those specified herein may result in hazardous radiation exposure.

CAUTION:
DDM-2000 circuit packs contain static sensitive components which can be damaged by electrostatic discharge. A static ground wrist strap must be worn when handling the circuit packs. See electrostatic discharge considerations in **Trouble Clearing: TAD-100***.*

NOTE:
FiberReach nodes operating at an OC-3 rate require two **28-Type OLIU**s in the **MAIN** slots of the FiberReach shelf.

NOTE:
The **28-Type OLIU**s require a faceplate interconnect cable assembly, [comcode 847721271].

NOTE:
If the DDM-2000 fails to respond in the indicated manner, refer to **Trouble Clearing: IXL-001**.

DO ITEMS BELOW IN ORDER LISTED . . . . . FOR DETAILS, GO TO

NOTE:
It is assumed that all DDM-2000 OC-12 shelves in the system have passed the looped transmission test(s) and the DDM-2000 OC-12 ring has been established, as required (363-206-295, *DDM-2000 OC-12 Multiplexer, TARP Release 7, User/Service Manual (TOP)—Volume II),* **System Turnup: NTP-002** and **NTP-020**. It is also assumed the DDM-2000 OC-3 Release 15 shelves have been equipped and tested, (363-206-285, *DDM-2000 OC-3 Multiplexer, TARP Release 13 and Later, User/Service Manual (TOP)—Volume II),* **System Turnup: NTP-016** and the OC-3 and/or OC-12 ring has been established, as required, **System Turnup: NTP-022**. It is assumed that all DDM-2000 FiberReach OC-3 shelves in the system have passed the looped transmission test(s), **System Turnup: NTP-007**.

Determine the network configuration (for example, see Figure 1 or Figure 3.)

---

2. Verify that the host DDM-2000 OC-12 shelf is equipped with TARP Release 7 or Release 15 ring software. If not equipped with TARP Release 7 or Release 15 software, upgrade the DDM-2000 OC-12 host shelf with proper software. Verify that the DDM-2000 FiberReach OC-3 shelf is equipped with TARP Release 4 ring software. **DLP-531**

---

3. Determine the optical loss of each optical span from office records or by making the required measurements.

---

4. **NOTE:**
The **`rtrv-eqpt:`** command retrieves the `Equipage and Version Report`. This report lists the circuit pack type and version information for one or more slots. See the Commands and Reports section of this manual for a description of the **`rtrv-eqpt:`** command format.

DO ITEMS BELOW IN ORDER LISTED . . . . FOR DETAILS, GO TO

NOTE:
If work order or office records do not specify **OLIU** types, refer to 363-206-200, *DDM-2000 OC-3 and OC-12 Multiplexers, Applications, Planning, and Ordering Guide,* 363-206-300, *DDM-2000 FiberReach Multiplexer, Applications, Planning, and Ordering Guide,* 363-206-285, *DDM-2000 OC-3 Multiplexer, TARP Release 13 and Later, User/Service Manual—Volume I,* 363-206-295, *DDM-2000 OC-12 Multiplexer, TARP Release 7, User/Service Manual—Volume I, and/or* 363-206-305, *FiberReach Multiplexer, Wideband/Narrowband Shelf, TARP Release 3 and Later, User/Service Manual—Volume I* for a for a description of **OLIU** circuit packs and applications. Optical line power measurements and/or office records must be used to verify that the span length can be supported.

At the host OC-12 node, verify/install **OLIU** circuit packs in **FUNCTION UNITS** slots (**A**, **B**, **C**, or **D**) being used for OC-3 access.

---

5. **NOTE:**
If fecom is enabled, an `inconsistent DCC values` alarm will occur when the **OLIU**s are looped back. Normally, the alarm occurs when the user/network parameters on the **OHCTL**s at both ends of the DCC are set the same. To clear the alarm during a fiber loopback, use the **`set-fecom:`***`address`***`:com=disable`** command to disable the DCC.

At host OC-12 shelf, connect optical loops for **FUNCTION UNITS OLIU**s just installed.

---

6. **NOTE:**
The Network Side (NS)/User Side (US) parameters of the **`set-fecom:`** command must be set opposite at each end of the optical spans. For example, see Figure 2.

Use the **`rtrv-fecom/set-fecom`** command to verify/set Network Side/User Side parameters at each end of optical span being established.

DO ITEMS BELOW IN ORDER LISTED. . . . . FOR DETAILS, GO TO

7. Use the **`rtrv-oc3/set-oc3`** command at the host OC-12 shelf to verify/set application (*app*) parameter for the OC-12 **FUNCTION UNITS** slots being used for this OC-3 linear extension. For example, **`set-oc3:fn-a,app=`***`1+1`*.

8. Use the **`rtrv-oc3/set-oc3`** command at the remote FiberReach OC-3 shelf to verify/set application (*dcc*) parameter for the OC-3 **MAIN** slots being used for this OC-3 linear extension. For example,
`set-oc3:main-1,dcc=`*`identical`* and
`set-oc3:main-2,dcc=`*`identical`*.

9. **NOTE:**
If line timing mode is specified or external timing mode is specified but the timing reference was not available at the host OC-12 shelf turnup, the **TGS/TG3** option switches are probably set for *free running*. Before this configuration is established, the specified timing mode must be set on the **TGS/TG3** circuit packs.

NOTE:
If the option switch setting is changed, an update must be done by momentarily depressing the **UPD/INIT** button on the **SYSCTL** after the **TGS/TG3** circuit packs are reinstalled.

NOTE:
SYSCTL after the **TGS/TG3** circuit packs are reinstalled.

NOTE:
If external timing is selected and the **NE ACTY** LED remains lighted after the **TGS/TG3** circuit pack is reinserted, use the CIT and the **`rtrv-sync:`** command to check the operational mode of the system. If the mode is `Holdover` instead of `External`, check that the incoming timing references are connected. Also check `Mode Switching` (revertive or nonrevertive) and the external `DS1 Line Code/Format` switch settings.

DO ITEMS BELOW IN ORDER LISTED . . . . FOR DETAILS, GO TO

Set timing mode on **TGS/TG3** circuit packs to the timing mode specified in work order or office records. (OC-12 Shelf Reference: 363-206-295, *DDM-2000 OC-12 Multiplexer, TARP Release 7, User/Service Manual (TOP)—Volume II*, **DLP-510** or 363-206-285, *DDM-2000 OC-3 Multiplexer, TARP Release 13 and Later, User/Service Manual (TOP)—Volume II*, **DLP-513**).

10. **NOTE:**
If Kbyte or Sbyte (sync messaging) is enabled for the OC-12 **MAIN 1**(**MAIN-B-1**) and **MAIN 2(P)** (**MAIN-B-2(P)**) optical interfaces at any node in the OC-12 ring, it **must** be enabled at all nodes in the OC-12 ring and in the **FUNCTION UNITS** slots of the host OC-12 shelf. It **must** be enabled at the **MAIN-1** and **MAIN-2** slots for the DDM-2000 FiberReach OC-3 shelf used for the linear extension.

NOTE:
The **`rtrv-oc3:`** and **`rtrv-oc12:`** commands retrieve the `OC-3 Line Provisioning Report` and `OC-12 Line Provisioning Report`. This report displays the provisioned configuration of OC-3/OC-12 lines. See the Commands and Reports section in Volume I of this manual and 363-206-295, *DDM-2000 OC-12 Multiplexer, TARP Release 7, User/Service Manual—Volume I* or 363-206-285, *DDM-2000 OC-3 Multiplexer, TARP Release 13 and Later, User/Service Manual—Volume I* for a description of the **`rtrv-oc3:`** and **`rtrv-oc12:`** command format.

Use the **`rtrv-oc3:`** and **`rtrv-oc12:`** commands to obtain the `OC-3 Line Provisioning Report` and `OC-12 Line Provisioning Report` and verify if Kbyte/Sbyte is enabled. Use the **`set-oc3:`** and **`set-oc12:`** command to enable the Kbyte/Sbyte parameter, if required.

DO ITEMS BELOW IN ORDER LISTED. . . . . FOR DETAILS, GO TO

11. **NOTE:**
If Sync Autoreconfiguration is enabled, Kbyte/Sbyte must also be enabled.

NOTE:
The **`rtrv-sync:`** command retrieves the `Synchronization Report`. This report displays the provisioning and operational information on the synchronization attributes of the DDM-2000. See the Commands and Reports section in Volume I of this manual and 363-206-295, *DDM-2000 OC-12 Multiplexer, TARP Release 7, User/Service Manual—Volume I* or 363-206-285, *DDM-2000 OC-3 Multiplexer, TARP Release 13 and Later, User/Service Manual—Volume I* for a description of the **`rtrv-sync:`** command format.

Use the **`rtrv-sync:`** command to obtain the `Synchronization Report` and verify if Sync Autoreconfiguration is enabled. Use the **`set-sync:`** command to enable the Sync Autoreconfiguration parameter, if required.

---

12. **NOTE:**
Two or more shelves in the same network **cannot** have the same system name or TID (set by the **`set-ne:`** command).

Verify no duplicate TID settings exist. The **`rtrv-ne:`** command may be used at each shelf in the network to display settings. If duplicates exist, determine new settings and use the **`set-ne:`** command to make new settings.

DO ITEMS BELOW IN ORDER LISTED . . . . FOR DETAILS, GO TO

13. **NOTE:**
OC-12 host shelves with Release 15 and FiberReach OC-3 hosted shelves with Release 4 software support AGNE(s) and alarm groups. OC-12 host shelves with Release 7 software do **not** support these features and will **not** appear in the alarm groups of a network with mixed software.

NOTE:
The Remote NE Status (**`rnestat`**) parameter of the **`set-ne:`** command must be enabled prior to designating the AGNE(s) and alarm group numbers.

NOTE:
Shelves may be designated as an alarm gateway network element (AGNE) and assigned an alarm group number. (Default alarm group number is 255.) At least one AGNE is required per alarm group. One primary AGNE and one backup per alarm group is recommmended. For a network greater than 16 nodes, the AGNE and TL1 GNE should be on separate nodes. The AGNE parameter of the **`set-ne:`** command may have been set to yes on each new shelf during shelf turnup procedures to suppress an `AGNE communication failure` alarm.

Use the **`set-ne:`** command to designate the AGNE(s) and alarm group numbers, as required.

---

14. **NOTE:**
Only **one** remote FiberReach OC-3 shelf is allowed in this linear-extension configuration.

NOTE:
This OC-3 linear extension requires that the **FUNCTION UNITS ( ) 1 OLIU** on the OC-12 shelf connect to the **MAIN-1 OLIU** on the FiberReach OC-3 shelf. The **MAIN-2 OLIU** on the FiberReach OC-3 shelf connects to **FUNCTION UNITS ( ) 2(P) OLIU** on the host OC-12 shelf. See Figure 1. This procedure will establish the linear extension configuration from the OC-12 host node to the FiberReach OC-3 node.

DO ITEMS BELOW IN ORDER LISTED . . . . . FOR DETAILS, GO TO

At the near end, remove the optical loop from the **OLIU** (for example in Figure 1, Node 5 OC-12 shelf **FUNCTION UNITS A 1**) associated with the optical span being established. At the other end of the optical span, remove the optical loop from the associated **28-Type OLIU** (for example, in Figure 1, Node 7 FiberReach OC-3 shelf **MAIN-1 OLIU**).

---

15. **NOTE:**
The section data communication channel (DCC), used for far end communications, must be enabled at each network element (shelf) optical interface being tested in order for the end-to-end line tests to work. Default condition for the DCC channel is "enabled". If it has been disabled, use the **`set-fecom:`** command **at each shelf** to enable far end communications.

At each shelf, use the **`set-fecom:`***`address`***`:com=enabled`** command to ensure far end communications (fecom) is enabled.

---

16. Perform optical fiber connections and verification of the integrity of the optical span being established. **DLP-514**

---

17. **NOTE:**
Shelves that are part of a subnetwork being partitioned into multiple areas require that the NSAP*AREA* field and level 2 IS-IS routing parameters of the **`ent-ulsdcc-l3:`** command be set. See Section 11, Commands and Reports in Volume I of this manual and 363-206-285, *DDM-2000 OC-3 Multiplexer, TARP Release 13 and Later, User/Service Manual—Volume I* or 363-206-295, *DDM-2000 OC-12 Multiplexer, TARP Release 7, User/Service Manual—Volume I*, for an explanation of the command parameters and 824-102-144, *Lucent Technologies 2000 Product Family, Operations Interworking Guide For TARP Releases*, for an explanation of the engineering rules for subnetwork partitioning.

Use the **`ent-ulsdcc-l3:`** command to designate the NSAP*AREA* field and level 2 IS-IS routing, as required.

DO ITEMS BELOW IN ORDER LISTED . . . . FOR DETAILS, GO TO

18. **NOTE:**
    The **`rtrv-pm-line:`** command in the following procedure displays performance monitoring data associated with the OC-3 lines terminated on the system.

    Perform end-to-end OC-3 line test. **DLP-515**

19. Repeat this procedure for all OC-3 optical spans being established in the DDM-2000 OC-12/OC-3 network. Ensure that the last optical span connected to the OC-12 host shelf is connected to an **OLIU** in the opposite slot as the one in the first OC-3 span (for example, slot **1** for the first span and slot **2(P)** for the second span).

20. **NOTE:**
    Establishing service requires that the proper slots in each terminating node be properly equipped with the correct circuit pack(s) for the type of service being established. It also requires numerous cross connections in each of the nodes representing the path of the required service. Additionally, transmission tests should be performed to verify the continuity and quality of the established circuit.

    The FiberReach OC-3 linear extension is now ready for initial service to be established.
    Initial DS1 Service [**System Turnup: NTP-004**]
    Initial T1 Service [**System Turnup: NTP-013**]
    Initial HDSL Service [**System Turnup: NTP-017**]
    Initial DS3 Service [**System Turnup: NTP-025**]
    STS-3c Service [**System Turnup: NTP-016**]

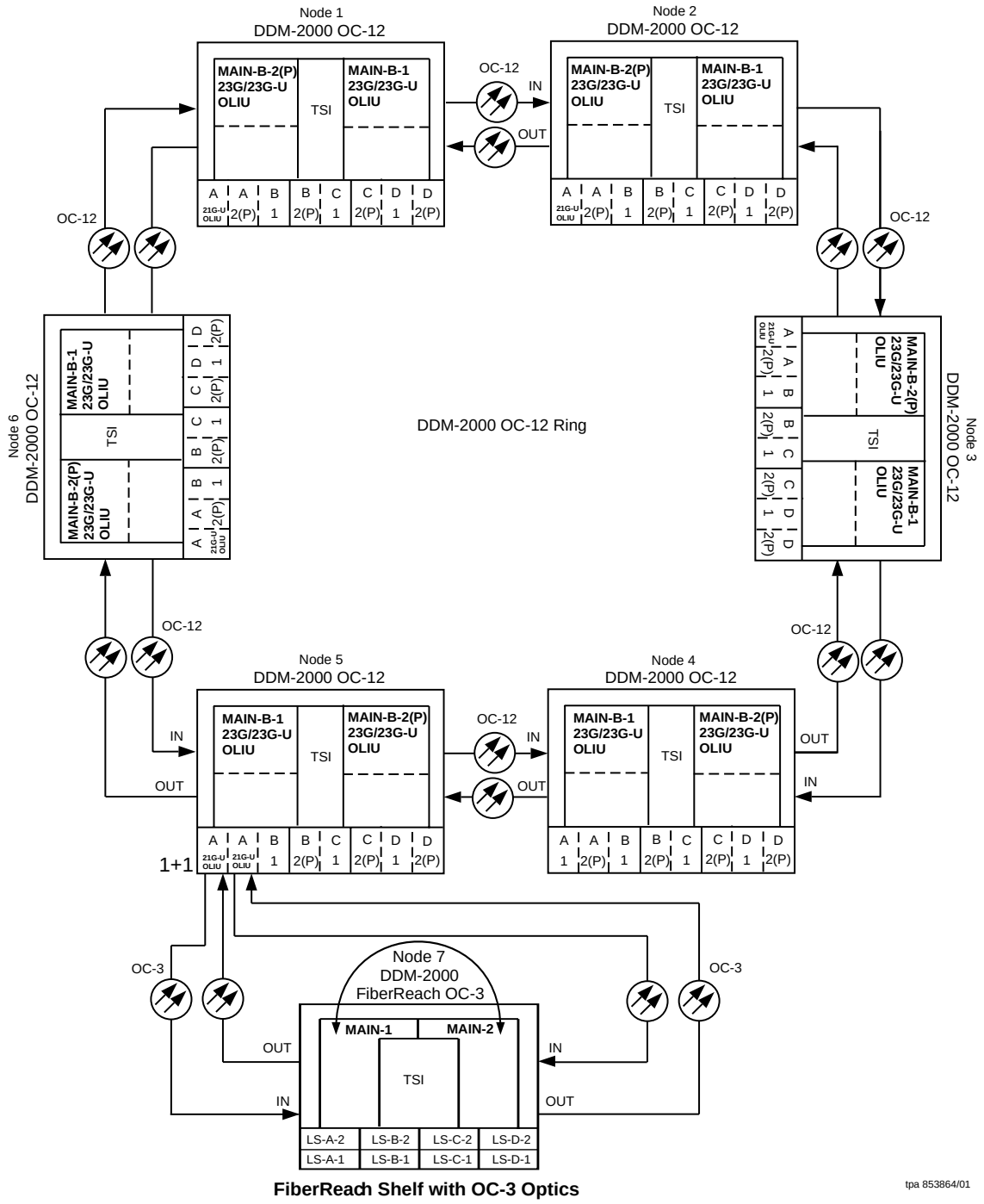

Figure 1 – Example OC-3 Linear Extension Connections

DDM-2000 OC-12 DCC Network Side (NS)/User Side (US) Defaults (set-fecom:nsus=ns/us)								
21-Type OLIUs (0X1, 1+1 or video)	**FN-A-1** dcc-a1	**FN-A-2** dcc-a2	**FN-B-1** dcc-b1	**FN-B-2** dcc-b2	**FN-C-1** dcc-c1	**FN-C-2** dcc-c2	**FN-D-1** dcc-d1	**FN-D-2** dcc-d2
	NS	US	NS	US	NS	US	NS	US
23-Type OLIUs	**MAIN-B-1** dcc-mb1		**MAIN-B-2** dcc-mb2					
	US		NS					

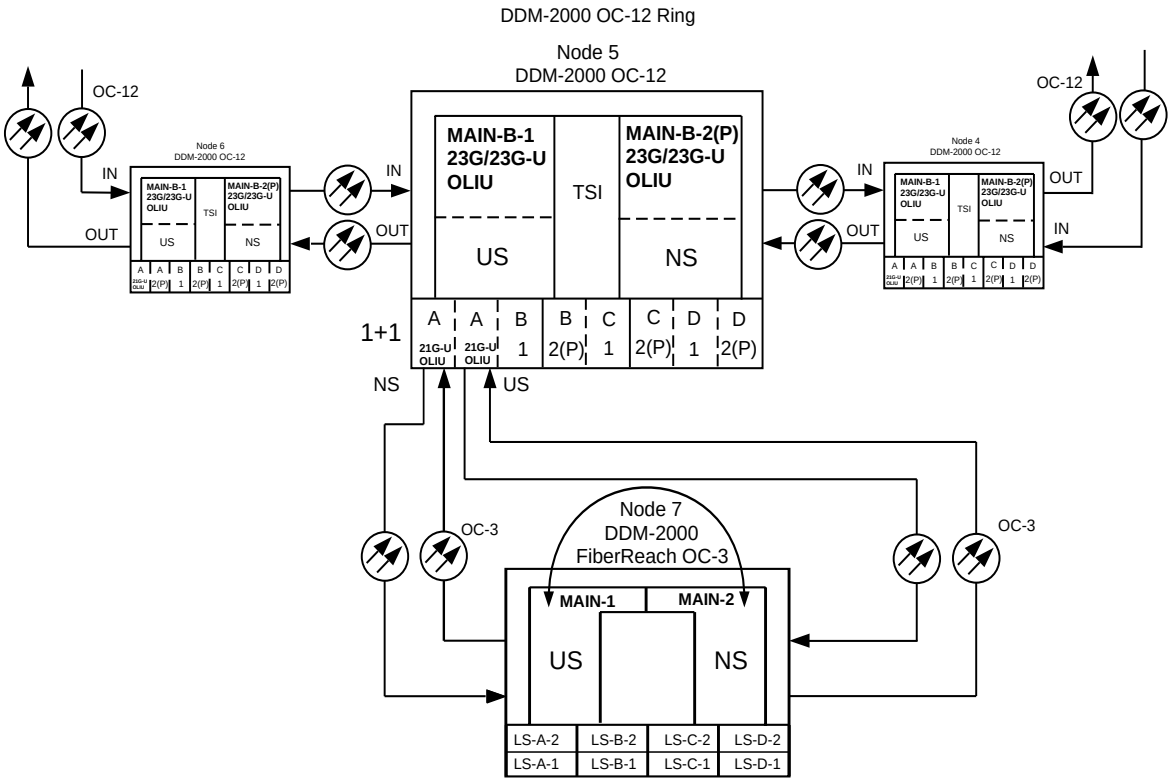

FiberReach Shelf with OC-3 Optics

DDM-2000 FiberReach OC-3 DCC Network Side (NS)/User Side (US) Defaults (set-fecom:nsus=ns/us)		
28-Type OLIUs	**MAIN-1** dcc-m1	**MAIN-2** dcc-m2
	US	NS

Figure 2 – Example of User Side/Network Side Value Settings

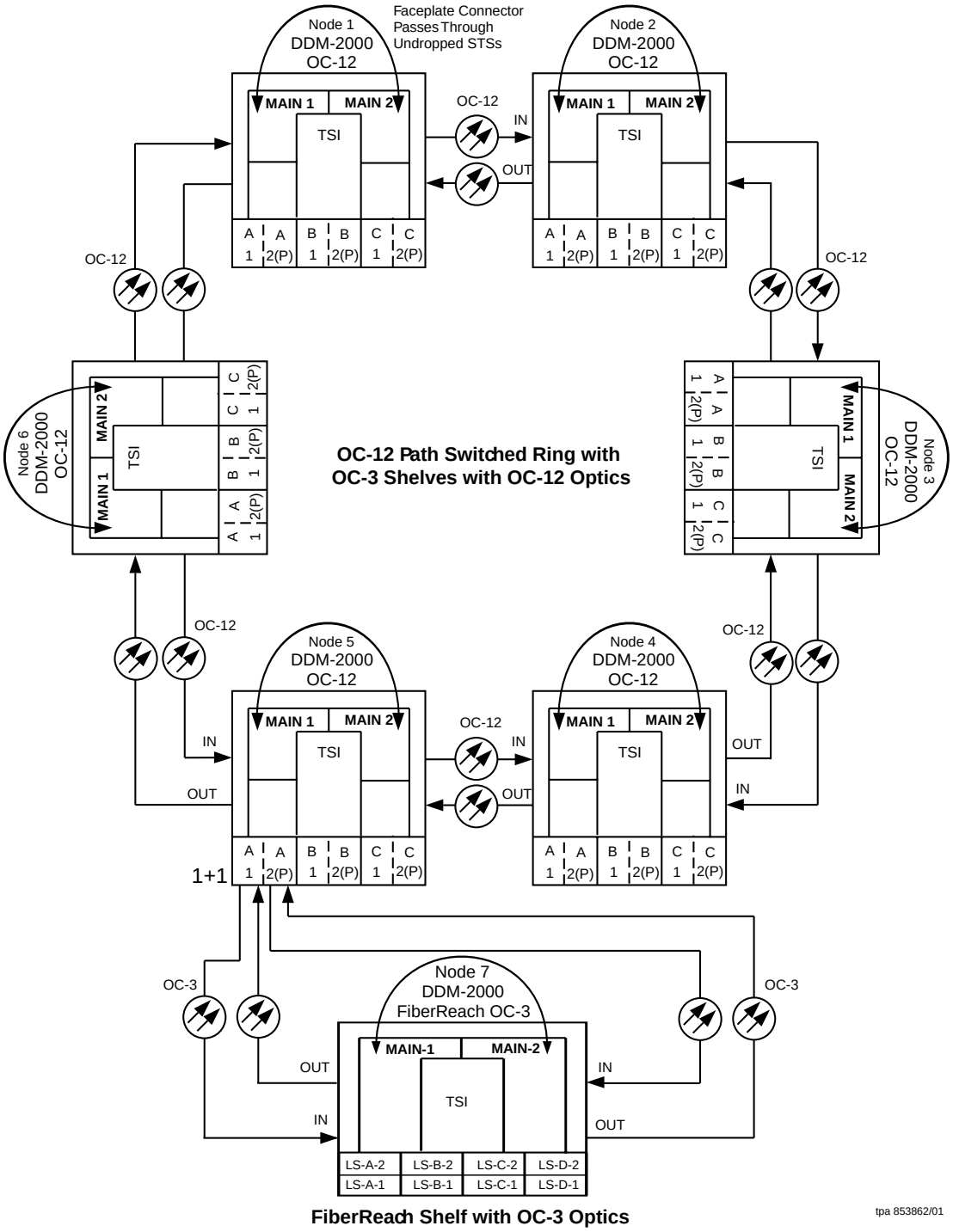

Figure 3 – Example OC-3 Linear Extension Configuration Connections

DDM-2000 OC-12 DCC Network Side (NS)/User Side (US) Defaults (set-fecom:nsus=ns/us)						
22-Type OLIUs (0X1 or 1+1)	**FN-A-1** dcc-a1	**FN-A-2** dcc-a2	**FN-B-1** dcc-b1	**FN-B-2** dcc-b2	**FN-C-1** dcc-c1	**FN-C-2** dcc-c2
	NS	US	NS	US	NS	US
29-Type OLIUs	**MAIN-1** dcc-m1	**MAIN-2** dcc-m2				
	US	NS				

OC-12 Path Switched Ring with OC-3 Shelves with OC-12 Optics

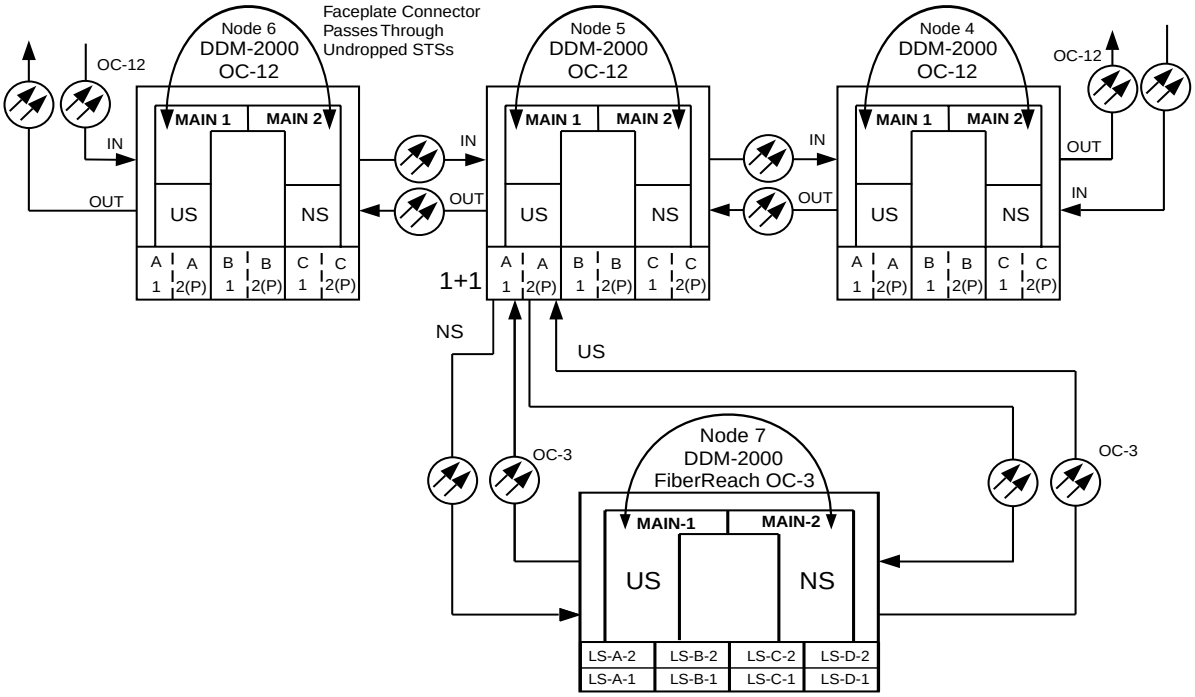

FiberReach Shelf with OC-3 Optics

DDM-2000 FiberReach OC-3 DCC Network Side (NS)/User Side (US) Defaults (set-fecom:nsus=ns/us)		
28-Type OLIUs	**MAIN-1** dcc-m1	**MAIN-2** dcc-m2
	US	NS

tpa 853861/01

Figure 4 – Example of User Side/Network Side Value Settings

Establish FiberReach OC-3 or OC-12 Release 4 Linear Extension via FT-2000 OC-48 Backbone Ring

DO ITEMS BELOW IN ORDER LISTED . . . . FOR DETAILS, GO TO

1. **WARNING:**
Unterminated optical connectors may emit invisible laser radiation. Avoid direct exposure to the beam. Do not view beam with optical instruments. Use of controls or adjustments or performance of procedures other than those specified herein may result in hazardous radiation exposure.

CAUTION:
DDM-2000 circuit packs contain static sensitive components which can be damaged by electrostatic discharge. A static ground wrist strap must be worn when handling the circuit packs. See electrostatic discharge considerations in **Trouble Clearing: TAD-100***.*

NOTE:
FiberReach nodes operating at an OC-3 rate require two **28-Type OLIU**s in the **MAIN** slots of the FiberReach shelf.

NOTE:
FiberReach nodes operating at an OC-12 rate require two **29-Type OLIU**s in the **MAIN** slots of the FiberReach shelf.

NOTE:
The **28-Type** and **29-Type OLIU**s require a faceplate interconnect cable assembly, [comcode 847721271].

NOTE:
If the DDM-2000 fails to respond in the indicated manner, refer to **Trouble Clearing: IXL-001**.

NOTE:
It is assumed that FT-2000 shelves in the system have passed local tests and the FT-2000 ring has been established. It is also assumed the DDM-2000 FiberReach shelves have been equipped and tested, **System Turnup: NTP-007**).

DO ITEMS BELOW IN ORDER LISTED . . . . . FOR DETAILS, GO TO

NOTE:
This procedure is used to establish an OC-3/OC-12 linear extension connection to an FT-2000 ring (See Figure 1). Other configurations may have to be established to obtain your final configuration.

Determine the network configuration (for example, see Figure 1.)

2. Verify that the host FT-2000 OC-48 shelf is equipped with TARP Release 8.1 or later ring software. If not equipped with Release 8.1 or later software, upgrade the FT-2000 OC-48 host shelf with proper software. Verify that the DDM-2000 FiberReach shelves are equipped with TARP Release 4 ring software. **DLP-531**

3. Determine the optical loss of each optical span from office records or by making the required measurements.

4. At FT-2000, verify/provision the FT-2000 low speed OC-3/OC-12 slots Protection Mode (from OC-3/OC-12) Parameter to "*1+1*" (See **`CONFIGURATION-Set-OC3`** or **`CONFIGURATION-Set-OC12`** command in 365-575-103, *FT-2000 OC-48 Lightwave System, Release 8.1 Through 9.1, User/Service Manual)*.

5. At FT-2000 shelf, verify/assign DCC channels to FT-2000 low speed OC-3/OC-12 slots. (See **`CONFIGURATION-Enter-Assignment-DCC`** command in 365-575-103, *FT-2000 OC-48 Lightwave System, Release 8.1 Through 9.1, User/Service Manual)*.

6. **NOTE:**
   FAULT LEDs will not go off until fibers are connected to the DDM.

   Add OC-3/IS-3 Low Speed Circuit Pack(s), NTP-010 or **Add OC-12 Low Speed Circuit Pack(s), NTP-012** at the host FT-2000 shelves. (365-575-103, *FT-2000 OC-48 Lightwave System, Release 8.1 Through 9.1, User/Service Manual)*.

DO ITEMS BELOW IN ORDER LISTED . . . . FOR DETAILS, GO TO

7. Use the **`rtrv-oc3/set-oc3`** or **`rtrv-oc12/set-oc12`** command at the remote DDM-2000 FiberReach shelf to verify/set application (*dcc*) parameter for the OC-3/OC-12 **MAIN** slots being used for this OC-3/OC-12 linear extension. For example,
`set-oc3:main-1,dcc=`*`identical`* and
`set-oc3:main-2,dcc=`*`identical`* or
`set-oc12:main-1,dcc=`*`identical`* and
`set-oc12:main-2,dcc=`*`identical`*.

---

8. **NOTE:**
This procedure will establish the OC-3/OC-12 linear extension starting from the FT-2000 host node to the OC-3/OC-12 node, then back to the host FT-2000 node.

NOTE:
The Network Side (NS)/User Side (US) parameters of the OC-3/OC-12 **`set-fecom:`** command and the FT-2000 DCC orientation must be set opposite at each end of the optical spans. For example, see Figure 2.

Use the **`rtrv-fecom/set-fecom`** command at the DDM-2000 or the **`CONFIGURATION-Enter-Assignment-DCC`** command at the FT-2000 to verify/set Network Side/User Side parameters at each end of all optical spans being established.

---

9. **NOTE:**
If Kbyte or Sbyte (sync messaging) is enabled for the FiberReach OC-3/OC-12 **`MAIN-1`** and **`MAIN-2`** optical interfaces on the OC-3/OC-12 linear extension, it **must** be enabled at all nodes in the FT-2000 ring.

NOTE:
The **`rtrv-oc3:`** or **`rtrv-oc12:`**command retrieves the `OC-3 Line Provisioning Report` or `OC-12 Line Provisioning Report`. This report displays the provisioned configuration of OC-3/OC-12 lines. See the Commands and Reports section of this manual for a description of the **`rtrv-oc3:`** or **`rtrv-oc12:`** command format.

DO ITEMS BELOW IN ORDER LISTED. . . . . FOR DETAILS, GO TO

Use the **`rtrv-oc3:`** or **`rtrv-oc12:`** command to obtain the `OC-3 Line Provisioning Report` or `OC-12 Line Provisioning Report` and verify if Kbyte/Sbyte is enabled. Use the **`set-oc3:`** or **`set-oc12:`** command to enable the Kbyte/Sbyte parameter, if required.

---

10. **NOTE:**
    If Sync Autoreconfiguration is enabled, Kbyte/Sbyte must also be enabled.

    NOTE:
    The **`rtrv-sync:`** command retrieves the `Synchronization Report`. This report displays the provisioning and operational information on the synchronization attributes of the DDM-2000. See the Commands and Reports section of this manual for a description of the **`rtrv-sync:`** command format.

    Use the **`rtrv-sync:`** command to obtain the `Synchronization Report` and verify if Sync Autoreconfiguration is enabled. Use the **`set-sync:`** command to enable the Sync Autoreconfiguration parameter, if required.

---

11. **NOTE:**
    Two or more shelves in the same network **cannot** have the same system name or TID (set by the **`set-ne:`** command).

    Verify no duplicate TID settings exist. The **`rtrv-ne:`** command may be used at each shelf in the network to display settings. If duplicates exist, determine new settings and use the **`set-ne:`** command to make new settings.

DO ITEMS BELOW IN ORDER LISTED . . . . FOR DETAILS, GO TO

12. **NOTE:**
The Remote NE Status (**`rnestat`**) parameter of the **`set-ne:`** command must be enabled prior to designating the AGNE(s) and alarm group numbers.

NOTE:
Shelves may be designated as an alarm gateway network element (AGNE) and assigned an alarm group number. (Default alarm group number is 255.) At least one AGNE is required per alarm group. One primary AGNE and one backup per alarm group is recommmended. For a network greater than 16 nodes, the AGNE and TL1 GNE should be on separate nodes. The AGNE parameter of the **`set-ne:`** command may have been set to yes on each new shelf during shelf turnup procedures to suppress an `AGNE communication failure` alarm.

Use the **`set-ne:`** command to designate the AGNE(s) and alarm group numbers, as required.

---

13. **NOTE:**
Only **one** remote FiberReach OC-3/OC-12 shelf is allowed in this linear-extension configuration.

NOTE:
If Sync Autoreconfiguration is enabled, the DDM-2000 FiberReach shelf **MAIN-1** should be the connected first to the FT-2000. If the DDM-2000 FiberReach shelf connecting to FT-2000 via **MAIN-2(P)** is connected first, the DDM-2000 FiberReach shelf will remain in holdover until the **MAIN-1** is connected.

At the near end, remove the optical loop from the **MAIN 28-Type** or **29-Type OLIU** (for example in Figure 2, OC-3/OC-12 node 2 **MAIN-1**) associated with the optical span being established. At the other end of the optical span, remove the optical loop from the associated FT-2000 **OLIU** (for example, in Figure 2, FT-2000 **LS INTFC 1A** slot).

DO ITEMS BELOW IN ORDER LISTED. . . . .FOR DETAILS, GO TO

14. **NOTE:**
The section data communication channel (DCC), used for far end communications, must be enabled at each network element (shelf) optical interface being tested in order for the end-to-end line tests to work. Default condition for the DCC channel is "enabled". If it has been disabled, use the **`set-fecom:`** command **at each shelf** to enable far end communications.

At each DDM-2000 FiberReach shelf, use the **`set-fecom:`***`address`***`:com=enabled`** command to ensure far end DCC communications (fecom) is enabled.

At each FT-2000 shelf, use the **`SECURITY-Set-Far End Communications:`** command to ensure far end DCC communications (fecom) is enabled.

---

15. Perform optical fiber connections and verification of the integrity of the optical span being established. **DLP-514**

---

16. **NOTE:**
DDM-2000 shelves that are part of a subnetwork being partitioned into multiple areas require that the NSAP*AREA* field and level 2 IS-IS routing parameters of the **`ent-ulsdcc-l3:`** command be set. See Section 11, Commands and Reports in Volume I of this manual for an explanation of the command parameters. FT-2000 shelves that are part of a subnetwork being partitioned into multiple areas require that the L3 Area Address and Level 2 IS parameters of the **`CONFIGURATION-Set-ULSDCC-L3`** command be set. See 365-575-103, *FT-2000 OC-48 Lightwave System, Release 8.1 Through 9.1, User/Service Manual*, for an explanation of the command parameters. See 824-102-144, *Lucent Technologies 2000 Product Family, Operations Interworking Guide For TARP Releases*, for an explanation of the engineering rules for subnetwork partitioning.

DO ITEMS BELOW IN ORDER LISTED . . . . FOR DETAILS, GO TO

At the DDM-2000 FiberReach shelf, use the **`ent-ulsdcc-l3:`** command to designate the NSAP*AREA* field and level 2 IS-IS routing, as required.

At the FT-2000 shelf, use the **`CONFIGURATION-Set-ULSDCC-L3`** command to designate the L3 Area address and Level 2 IS parameters, as required.

---

17. **NOTE:**
    The **`rtrv-pm-line:`** command in the following procedure displays performance monitoring data associated with the OC-3/OC-12 lines terminated on the system.

    Perform end-to-end OC-3/OC-12 line test. **DLP-515**

---

18. Repeat this procedure for the OC-3/OC-12 optical span being established in the FT-2000 to FiberReach OC-3/OC-12 network. Ensure that the last optical span connected to the FT-2000 host shelf is connected to an **OLIU** in the opposite slot as the one in the first OC-3 span (for example, slot **1A** for the first span and slot **1B** for the second span).

---

19. **NOTE:**
    Establishing service requires that the proper slots in each terminating node be properly equipped with the correct circuit pack(s) for the type of service being established. It also requires numerous cross connections in each of the nodes representing the path of the required service. Additionally, transmission tests should be performed to verify the continuity and quality of the established circuit.

    The FiberReach OC-3/OC-12 linear extension is now ready for initial service to be established.
    Initial DS1 Service [**System Turnup: NTP-004**]
    Initial T1 Service [**System Turnup: NTP-013**]
    Initial HDSL Service [**System Turnup: NTP-017**]
    Initial DS3 Service [**System Turnup: NTP-025**]
    STS-3c Service [**System Turnup: NTP-016**]

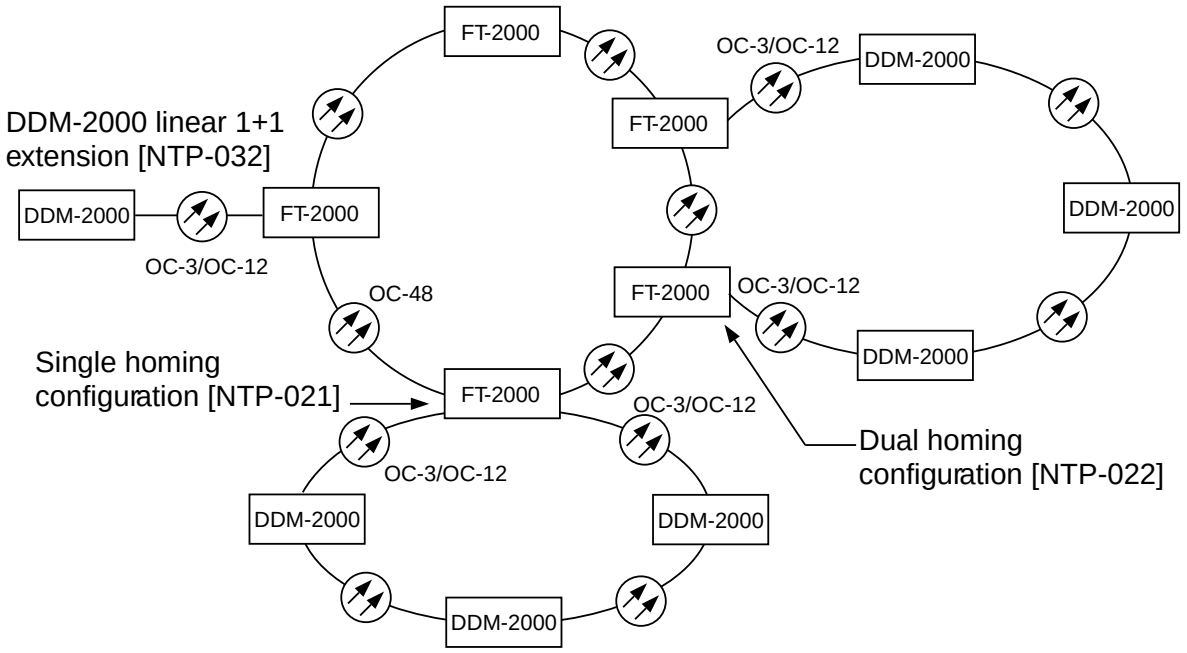

Figure 1 – Example FT-2000 OC-48/DDM-2000 FiberReach OC-3 or OC-12 Configurations

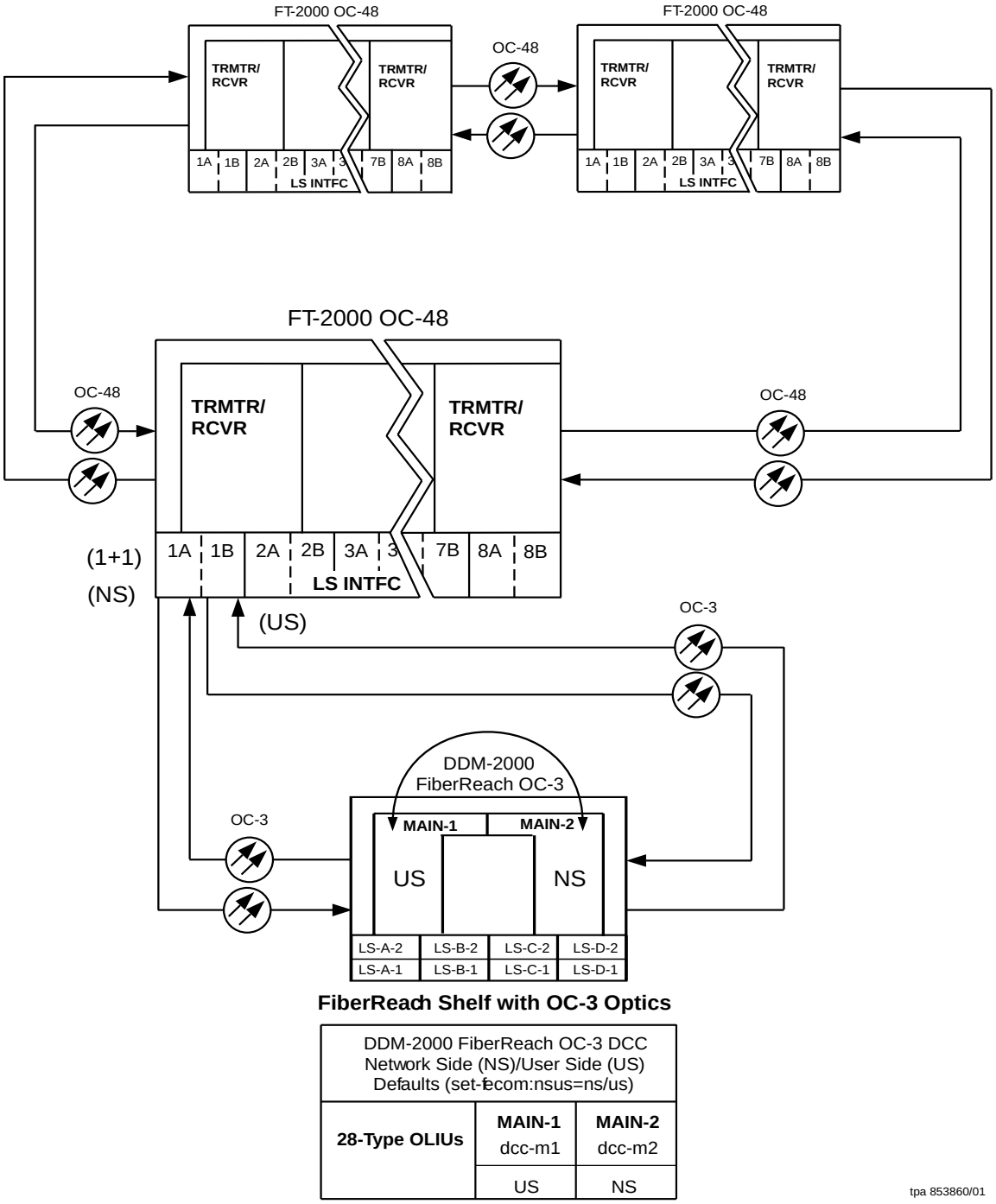

Figure 2 – Example of OC-3 Linear Extension User Side/Network Side Value Settings

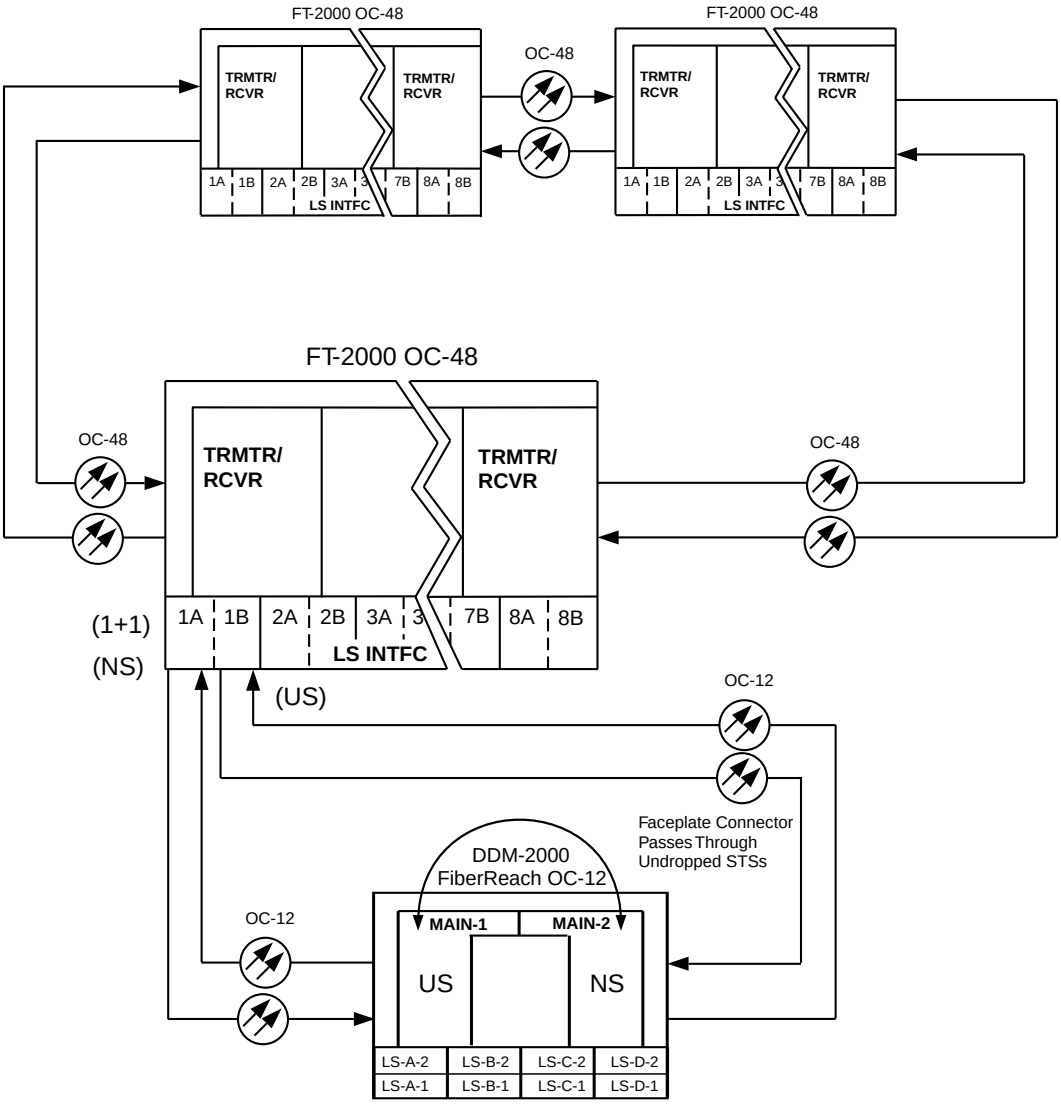

FiberReach Shelf with OC-12 Optics

DDM-2000 FiberReach OC-12 DCC Network Side (NS)/User Side (US) Defaults (set-ecom:nsus=ns/us)		
29-Type OLIUs	**MAIN-1** dcc-m1	**MAIN-2** dcc-m2
	US	NS

Figure 3 – Example of OC-12 Linear Extension User Side/Network Side Value Settings

Upgrade DDM-2000 OC-3 Ring Network With FiberReach OC-3 Shelves to OC-12 Ring Network In Service

DO ITEMS BELOW IN ORDER LISTED . . . . FOR DETAILS, GO TO

1. **CAUTION:**
Alarms created due to removal of **28-Type OLIU**s are non-service affecting, except those related to STS3c 0X1 cross-connected channels which are service affecting.

NOTE:
This procedure is used to convert an OC-3 VT1.5 path protected ring network using **28-Type OLIU**s to an OC-12 path protected ring network using **29-Type OLIU**s in DDM-2000 OC-3 and FiberReach shelves. It is assumed that the fiber being used in the current OC-3 ring network will be used to build the new OC-12 ring.

NOTE:
This procedure uses a 4-node OC-3 ring as an example for the OC-3 optics to OC-12 optics ring upgrade (Figure 1). This upgrade starts at Node 1 and proceeds clockwise. Local procedures will have to be written, using the concepts of this procedure, to upgrade the particular configuration that you have.

NOTE:
FiberReach TARP Release 4 software must be installed in FiberReach OC-3 shelves.

DO ITEMS BELOW IN ORDER LISTED . . . . FOR DETAILS, GO TO

NOTE:
You may also contact Lucent Technologies to provide this in-service upgrade. Experienced Lucent Technologies installers will help you plan and execute the network upgrade. For more information, contact your Lucent Technologies Account Representative.

Use the **`rtrv-alm:`** command at the OC-3 ring to verify that no alarms, locks, or switches are present.

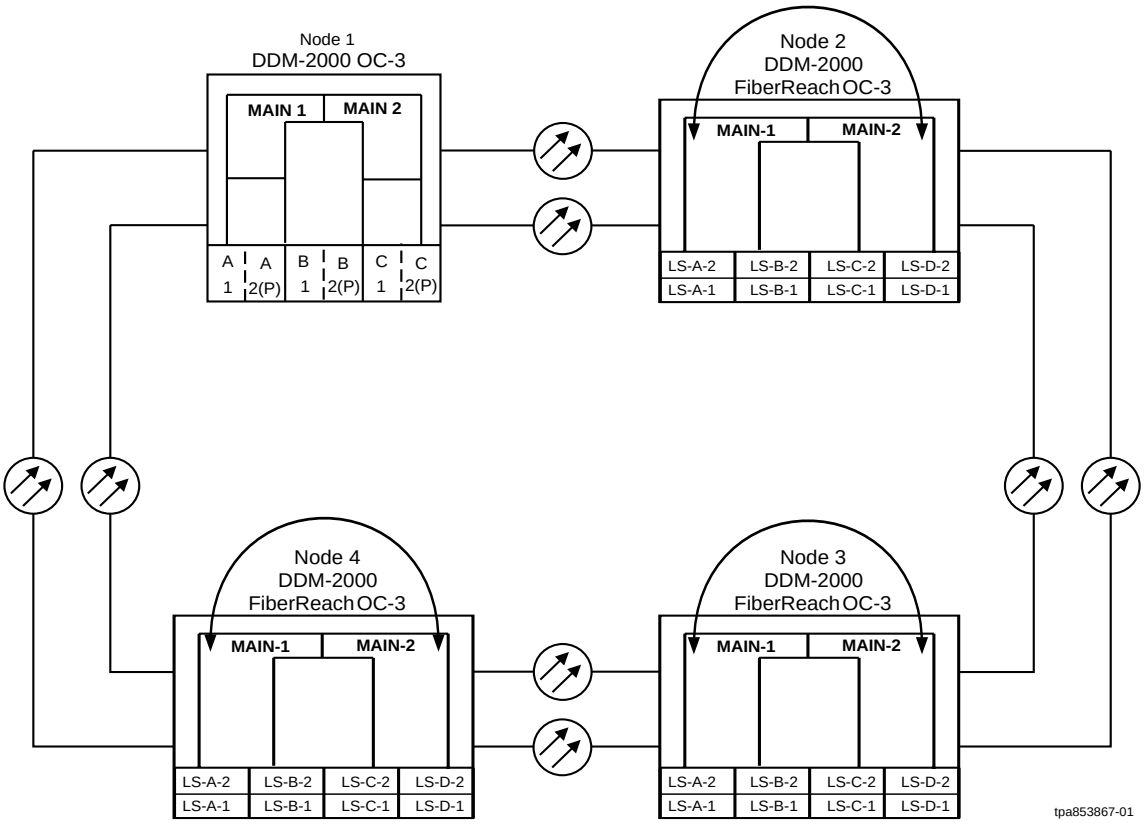

Figure 1 – Example of FiberReach OC-3 to FiberReach OC-12 Upgrade

DO ITEMS BELOW IN ORDER LISTED . . . . FOR DETAILS, GO TO

2. Before beginning this procedure, verify ring integrity and path protection switching function. At the start node, remove the receive (**IN**) fiber from ONE of the **MAIN OLIU**s. Verify no critical (**CR**) alarms are present. Reconnect the fiber and wait until alarms clear. Repeat this step on the other **MAIN OLIU**.

3. Notify maintenance center that alarms will be generated.

4. Use **`rtrv-map-network:`** and **`rtrv-map-neighbor:`** commands to determine the configuration of the OC-3 ring being upgraded and how the individual nodes are connected.

5. Upgrade all FiberReach nodes to TARP Release 4 software.

   A. In-Service Local Software Download **DLP-536**
   B. In-Service Remote Software Download **DLP-537**

6. ⚠ **CAUTION:**
   Sync autoconfiguration must be enabled at each line-timed node in the network.

   At each line-timed node in the network, use **`set-oc3:syncmsg=`***`Kbyte/Sbyte`* command to enable Kbyte or Sbyte sync messaging. Use **`set-sync:auto=`***`enabled`* command to enable Sync auto-reconfiguration.

7. At the starting OC-3 Node (Node 1 in this example), switch STS-1 and/or VT1.5 path from **MAIN-2** to **MAIN-1** with the **`switch-path-sts1:`** and/or **`switch-path-vt1:`** commands.

8. Remote login to Node 2 and switch STS-1 and/or VT1.5 path from **MAIN-1** to **MAIN-2** with the **`switch-path-sts1:`** and/or **`switch-path-vt1:`** commands.

9. Use the **`rtrv-sync;`** command to verify that **MAIN-2** is the active circuit pack, and active reference/line.

10. Use the **`switch-sync:s=src;`** and **`switch-sync:s=circuitpack;`** to force timing to **MAIN-2**.

DO ITEMS BELOW IN ORDER LISTED. . . . . FOR DETAILS, GO TO

11. **NOTE:**
A `CP removed` alarm will occur when the **OLIU** is removed. An `inc. OC3 LOS` (blinking **FAULT** LED on **OLIU**) alarm will occur at the other node connected to the removed fibers. Other nodes will receive `inc. VT AIS` and `inc. STS AIS` alarms.

At the starting OC-3 Node (Node 1), remove optical fibers and lift the faceplate latch of **MAIN-2 OLIU**, then remove **MAIN-2 OLIU**.

---

12. **NOTE:**
When the **29-Type OLIU** is installed in this step, an `unexpected CP type` status and `inc. OC12 LOS` alarm will occur. At the connecting node, an `inc. OC3 LOS` alarm will occur. When fibers are reconnected, the `unexpected CP type` status is still present at this Node and an `inc. OC12 LOF` alarm will occur. An `inc. OC3 LOF` alarm will occur at the connecting Node.

At the starting OC-3 Node (Node 1), install a **29-Type OLIU** into **MAIN-2 OLIU** slot and reconnect optical fibers.

---

13. **NOTE:**
A `OLIU connector failed` alarm will occur when the faceplate connector is removed.

At the other end of the OC-12 optical span being established, remove the faceplate connector connecting **MAIN-1** and **MAIN-2 OLIU**s.

---

14. **NOTE:**
A `CP removed` alarm will occur in this step when the **MAIN-1 OLIU** is removed. A `inc. OC12 LOS` alarm will occur at the connecting Node with the **29-Type OLIU** installed.

At the other end of the OC-12 optical span being established, remove optical fibers and lift the faceplate latch of **MAIN-1 OLIU**, then remove **MAIN-1 OLIU**.

DO ITEMS BELOW IN ORDER LISTED . . . . FOR DETAILS, GO TO

15. **NOTE:**
    When the **29-Type OLIU** is installed, an `unexpected CP type` status alarm will occur. The `inc. OC12 LOS` alarm clears at both ends of the span. The `inc. VT and STS AIS` alarms clear downstream.

    Install a **29-Type OLIU** into **MAIN-1 OLIU** slot and reconnect optical fibers. **Wait until the blinking FAULT LED goes off before continuing**.

16. At the next Node (Node 2 in this example), switch STS-1 and/or VT1.5 path from **MAIN-2** to **MAIN-1** with the **`switch-path-sts1:`** and/or **`switch-path-vt1:`** commands.

17. Remote login to Node 3 and switch STS-1 and/or VT1.5 path from **MAIN-1** to **MAIN-2** with the **`switch-path-sts1:`** and/or **`switch-path-vt1:`** commands.

18. Use the **`rtrv-sync;`** command to verify that **MAIN-2** is the active circuit pack, and active reference/line.

19. Use the **`switch-sync:s=src;`** and **`switch-sync:s=circuitpack;`** to force timing to **MAIN-2**.

20. **NOTE:**
    A `CP removed` alarm will occur and an `inc. OC3 LOS` alarm will occur at the connecting Node when the **MAIN-2 OLIU** is removed from this Node. Other nodes will receive `inc. VT and STS AIS` alarms.

    At Node 2, remove optical fibers and lift the faceplate latch of **MAIN-2 OLIU** for next span being established, then remove **MAIN-2 OLIU.**

DO ITEMS BELOW IN ORDER LISTED. . . . . FOR DETAILS, GO TO

21. **NOTE:**
When the **29-Type OLIU** is installed an `unexpected CP type` status, `OLIU CP failed`, and `OLIU connector failed` alarm will occur. An `inc. OC3 LOF` alarm will occur at the Node connected to this **OLIU**.

Install a **29-Type OLIU** into **MAIN-2 OLIU** slot and reconnect optical fibers.

---

22. Connect the OC-12 faceplate connector between **MAIN-1** and **MAIN-2 29-Type OLIU**s. Wait until `OLIU connector failed` and `OLIU CP failed` alarms clear.

---

23. **CAUTION:**
The update (**upd**) *command must be executed at the Node with both* **29-Type OLIU**s **installed**.

NOTE:
After the update at this node, the `inc. OC12 LOF` alarm remains until the **29-Type OLIU** is installed at the connecting Node.

Momentarily depress the **UPD** button on the **SYSCTL** or execute the update (**upd**) command at the Node with both **29-Type OLIU**s installed.

---

24. **NOTE:**
A `OLIU connector failed` alarm will occur when the faceplate connector is removed.

At Node 3, remove the faceplate connector connecting **MAIN-1** and **MAIN-2 OLIU**s.

---

25. **NOTE:**
A `CP removed` alarm will occur when the **OLIU** is removed. An `inc. OC12 LOS` (blinking **FAULT** LED on **OLIU**) alarm will occur at the other node connected to the removed fibers. Other nodes will receive `inc. VT AIS` and `inc. STS AIS` alarms.

A Node 3, remove optical fibers and lift the faceplate latch of **MAIN-1 OLIU**, then remove **MAIN-1 OLIU**.

DO ITEMS BELOW IN ORDER LISTED . . . . FOR DETAILS, GO TO

26. **NOTE:**
When the **29-Type OLIU** is installed in this step, an `unexpected CP type` status alarm will occur. When the fibers are reconnected, the `inc. OC12 LOS` alarm will clear at the connecting Node.

At Node 3, install a **29-Type OLIU** into **MAIN-1 OLIU** slot and reconnect optical fibers.

---

27. Remote login to Node 4 and switch STS-1 and/or VT1.5 path from **MAIN-1** to **MAIN-2** with the **`switch-path-sts1:`** and/or **`switch-path-vt1:`** commands.

---

28. Use the **`rtrv-sync;`** command to verify that **MAIN-2** is the active circuit pack, and active reference/line.

---

29. Use the **`switch-sync:s=src;`** and **`switch-sync:s=circuitpack;`** to force timing to **MAIN-2**.

---

30. At Node 3, switch STS-1 and/or VT1.5 path from **MAIN-2** to **MAIN-1** with the **`switch-path-sts1:`** and/or **`switch-path-vt1:`** commands.

---

31. **NOTE:**
A `CP removed` alarm will occur and an `inc. OC3 LOS` alarm will occur at the connecting Node when the **MAIN 2(P) OLIU** is removed from this Node. Other nodes will receive `inc. VT and STS AIS` alarms.

At Node 3, remove optical fibers and lift the faceplate latch of **MAIN-2 OLIU** for next span being established, then remove **MAIN-2 OLIU.**

DO ITEMS BELOW IN ORDER LISTED. . . . . FOR DETAILS, GO TO

32. **NOTE:**
When the **29-Type OLIU** is installed an `unexpected CP type` status, `OLIU CP failed`, and `OLIU connector failed` alarm will occur. An `inc. OC3 LOF` alarm will occur at the Node connected to this **OLIU**.

Install a **29-Type OLIU** into **MAIN-2 OLIU** slot and reconnect optical fibers.

---

33. Connect the OC-12 faceplate connector between **MAIN-1** and **MAIN-2 29-Type OLIU**s. Wait until `OLIU connector failed` and `OLIU CP failed` alarms clear.

---

34. **CAUTION:**
The update (**upd**) *command must be executed at the Node with both* **29-Type OLIU**s **installed**.

NOTE:
After the update at this node, the `inc. OC12 LOF` alarm remains until the **29-Type OLIU** is installed at the connecting Node.

Momentarily depress the **UPD** button on the **SYSCTL** or execute the update (**upd**) command at the Node with both **29-Type OLIU**s installed.

---

35. **NOTE:**
A `OLIU connector failed` alarm will occur when the faceplate connector is removed.

At Node 4, remove the faceplate connector connecting **MAIN-1** and **MAIN-2 OLIU**s.

DO ITEMS BELOW IN ORDER LISTED . . . . FOR DETAILS, GO TO

36. **NOTE:**
A `CP removed` alarm will occur when the **OLIU** is removed. An `inc. OC12 LOS` (blinking **FAULT** LED on **OLIU**) alarm will occur at the other node connected to the removed fibers. Other nodes will receive `inc. VT AIS` and `inc. STS AIS` alarms.

At Node 4, remove optical fibers and lift the faceplate latch of **MAIN-1 OLIU**, then remove **MAIN-1 OLIU**.

37. **NOTE:**
When the **29-Type OLIU** is installed in this step, an `unexpected CP type` status alarm will occur. When fibers are reconnected, the `inc. OC12 LOS` alarm will clear at the connecting Node.

At Node 4, install a **29-Type OLIU** into **MAIN-1 OLIU** slot and reconnect optical fibers.

38. At Node 4, switch STS-1 and/or VT1.5 path from **MAIN-2** to **MAIN-1** with the **`switch-path-sts1:`** and/or **`switch-path-vt1:`** commands.

39. Use the **`rtrv-sync;`** command to verify that **MAIN-2** is the active circuit pack, and active reference/line.

40. Use the **`switch-sync:s=src;`** and **`switch-sync:s=circuitpack;`** to force timing to **MAIN-2**.

41. At the starting Node 1, switch STS-1 and/or VT1.5 path from **MAIN-1** to **MAIN-2** with the **`switch-path-sts1:`** and/or **`switch-path-vt1:`** commands.

DO ITEMS BELOW IN ORDER LISTED. . . . . FOR DETAILS, GO TO

42. **NOTE:**
A `CP removed` alarm will occur and an `inc. OC3 LOS` alarm will occur at the connecting Node when the **MAIN-2 OLIU** is removed from this Node. Other nodes will receive `inc. VT and STS AIS` alarms.

    At Node 4, remove optical fibers and lift the faceplate latch of **MAIN-2 OLIU** for next span being established, then remove **MAIN-2 OLIU.**

---

43. **NOTE:**
When the **29-Type OLIU** is installed an `unexpected CP type` status, `OLIU CP failed`, and `OLIU connector failed` alarm will occur. An `inc. OC3 LOF` alarm will occur at the Node connected to this **OLIU**.

    Install a **29-Type OLIU** into **MAIN-2 OLIU** slot and reconnect optical fibers.

---

44. Connect the OC-12 faceplate connector between **MAIN-1** and **MAIN-2 29-Type OLIU**s. Wait until `OLIU connector failed` and `OLIU CP failed` alarms clear.

---

45. **CAUTION:**
The update (**upd**) *command must be executed at the Node with both* **29-Type OLIU**s **installed***.*

    NOTE:
After the update at this node, the `inc. OC12 LOF` alarm remains until the **29-Type OLIU** is installed at the connecting Node.

    Momentarily depress the **UPD** button on the **SYSCTL** or execute the update (**upd**) command at the Node with both **29-Type OLIU**s installed.

DO ITEMS BELOW IN ORDER LISTED . . . . FOR DETAILS, GO TO

46. **NOTE:**
A `CP removed` alarm will occur when the **MAIN-1 OLIU** is removed from the starting Node.

At the starting Node (Node 1), remove optical fibers and lift the faceplate latch of **MAIN-1 OLIU**, then remove **MAIN-1 OLIU**.

47. **NOTE:**
When the **29-Type OLIU** is installed, an `unexpected CP type` status, `OLIU CP failed`, and `OLIU connector failed` alarm will occur. The `inc. OC12 LOS` alarm should clear at both ends of the span. The `inc. VT and STS AIS` alarms clear downstream.

Install a **29-Type OLIU** into **MAIN-1 OLIU** slot and reconnect optical fibers.

48. At the starting Node 1, connect the OC-12 faceplate connector between **MAIN-1** and **MAIN-2 29-Type OLIU**s.

49. Momentarily depress the **UPD** button on the **SYSCTL** or execute the update (**upd**) command at the starting Node.

50. If an OC-12 shelf is to be added to this new ring configuration, Use the procedures of **NTP-021** in 363-206-295, *DDM-2000 OC-12 Multiplexer, TARP Release 7, User/Service Manual (TOP)—Volume II* or **NTP-026** in 363-206-285, *DDM-2000 OC-3 Multiplexer, TARP Release 13 and Later, User/Service Manual (TOP)—Volume II*.

Establish FiberReach OC-3 or OC-12 Release 4 Linear Extension via WaveStar TDM 2.5G OC-48 or 10G OC-192 Backbone Ring

DO ITEMS BELOW IN ORDER LISTED . . . . FOR DETAILS, GO TO

1. **WARNING:**
Unterminated optical connectors may emit invisible laser radiation. Avoid direct exposure to the beam. Do not view beam with optical instruments. Use of controls or adjustments or performance of procedures other than those specified herein may result in hazardous radiation exposure.

CAUTION:
DDM-2000 circuit packs contain static sensitive components which can be damaged by electrostatic discharge. A static ground wrist strap must be worn when handling the circuit packs. See electrostatic discharge considerations in **Trouble Clearing: TAD-100***.*

NOTE:
FiberReach nodes operating at an OC-3 rate require two **28-Type OLIU**s in the **MAIN** slots of the FiberReach shelf.

NOTE:
FiberReach nodes operating at an OC-12 rate require two **29-Type OLIU**s in the **MAIN** slots of the FiberReach shelf.

NOTE:
The **28-Type** and **29-Type OLIU**s require a faceplate interconnect cable assembly, [comcode 847721271].

NOTE:
If the DDM-2000 fails to respond in the indicated manner, refer to **Trouble Clearing: IXL-001**.

DO ITEMS BELOW IN ORDER LISTED . . . . . FOR DETAILS, GO TO

NOTE:
It is assumed that WaveStar TDM 2.5G/10G shelves in the system have passed local tests and the WaveStar TDM 2.5G OC-48 or 10G OC-192 ring has been established. It is also assumed the FiberReach shelves have been equipped and tested (363-206-305, *DDM-2000* FiberReach *Multiplexer, Wideband/Narrowband Shelf, TARP Release 3 and Later, User/Service Manual (TOP)—Volume II*, **System Turnup: NTP-007**).

NOTE:
This procedure is used to establish an FiberReach OC-3/OC-12 linear extension connection to an WaveStar TDM 2.5G OC-48 or 10G OC-192 ring (See Figure 1). Other configurations may have to be established to obtain your final configuration.

Determine the network configuration (for example, see Figure 1.)

2.	Verify that the host WaveStar TDM 2.5G shelf is equipped with Release 3 or later software or the 10G is equipped with Release 1 or later. If not equipped with Release 3 or 1 or later software, upgrade the WaveStar TDM 2.5G/10G host shelf with proper software. Verify that the FiberReach shelves are equipped with TARP Release 4 ring software.	**DLP-531**
3.	Determine the optical loss of each optical span from office records or by making the required measurements.	
4.	At WaveStar TDM 2.5G/10G, verify/provision the WaveStar TDM 2.5G/10G low speed OC-3/OC-12 slots to “1+1", enable DCC channels, and install circuit packs. (See **Create New Optical Port Protection Group, T 302** procedure in 365-371-110, *WaveStar TDM 2.5G (OC-48), Release 3.0, User Operations Guide or* 365-371-310, *WaveStar TDM 10G (OC-192), (2 Fiber), Release 1.0, User Operations Guide)*.	

DO ITEMS BELOW IN ORDER LISTED . . . . FOR DETAILS, GO TO

5. Use the **`rtrv-oc3/set-oc3`** or **`rtrv-oc12/set-oc12`** command at the remote FiberReach shelf to verify/set application (*dcc*) parameter for the OC-3/OC-12 **MAIN** slots being used for this OC-3/OC-12 linear extension. For example,
`set-oc3:main-1,dcc=`*`identical`* and
`set-oc3:main-2,dcc=`*`identical`* or
`set-oc12:main-1,dcc=`*`identical`* and
`set-oc12:main-2,dcc=`*`identical`*.

---

6. **NOTE:**
This procedure will establish the FiberReach OC-3/OC-12 linear extension starting from the WaveStar TDM 2.5G/10G host node to the OC-3/OC-12 node, then back to the host WaveStar TDM 2.5G/10G node.

NOTE:
The Network Side (NS)/User Side (US) parameters of the OC-3/OC-12 **`set-fecom:`** command and the WaveStar TDM 2.5G/10G DCC orientation must be set opposite at each end of the optical spans. For example, see Figure 2.

Use the **`rtrv-fecom/set-fecom`** command at the DDM-2000 or the **Enable/Disable DCC Terminations, T 305**, procedure at the WaveStar TDM 2.5G/10G to verify/set Network Side/User Side parameters at each end of all optical spans being established.

---

7. **NOTE:**
If Kbyte or Sbyte (sync messaging) is enabled for the FiberReach OC-3/OC-12 **`MAIN-1`** and **`MAIN-2`** optical interfaces on the OC-3/OC-12 linear extension, it **must** be enabled at all nodes in the WaveStar TDM 2.5G/10G ring.

NOTE:
The **`rtrv-oc3:`** or **`rtrv-oc12:`** command retrieves the `OC-3 Line Provisioning Report` or `OC-12 Line Provisioning Report`. This report displays the provisioned configuration of OC-3/OC-12 lines. See the Commands and Reports section of this manual for a description of the **`rtrv-oc3:`** or **`rtrv-oc12:`** command format.

DO ITEMS BELOW IN ORDER LISTED. . . . .FOR DETAILS, GO TO

Use the **`rtrv-oc3:`** or **`rtrv-oc12:`** command to obtain the `OC-3 Line Provisioning Report` or `OC-12 Line Provisioning Report` and verify if Kbyte/Sbyte is enabled. Use the **`set-oc3:`** or **`set-oc12:`** command to enable the Kbyte/Sbyte parameter, if required.

---

8. **NOTE:**
If Sync Autoreconfiguration is enabled, Kbyte/Sbyte must also be enabled.

NOTE:
The **`rtrv-sync:`** command retrieves the `Synchronization Report`. This report displays the provisioning and operational information on the synchronization attributes of the DDM-2000. See the Commands and Reports section of this manual and the OC-3 manual for a description of the **`rtrv-sync:`** command format.

Use the **`rtrv-sync:`** command to obtain the `Synchronization Report` and verify if Sync Autoreconfiguration is enabled. Use the **`set-sync:`** command to enable the Sync Autoreconfiguration parameter, if required.

---

9. **NOTE:**
Two or more shelves in the same network **cannot** have the same system name or TID (set by the **`set-ne:`** command).

Verify no duplicate TID settings exist. The **`rtrv-ne:`** command may be used at each shelf in the network to display settings. If duplicates exist, determine new settings and use the **`set-ne:`** command to make new settings.

DO ITEMS BELOW IN ORDER LISTED . . . . FOR DETAILS, GO TO

10. **NOTE:**
FiberReach OC-3/OC-12 hosted shelves with Release 4 software support AGNE(s) and alarm groups. WaveStar TDM 2.5G/10G OC-48/OC-192 host shelves with Release 3 or 1 software do **not** support these features and will **not** appear in the alarm groups of a network with mixed software.

NOTE:
The Remote NE Status (**`rnestat`**) parameter of the **`set-ne:`** command must be enabled prior to designating the AGNE(s) and alarm group numbers.

NOTE:
Shelves may be designated as an alarm gateway network element (AGNE) and assigned an alarm group number. (Default alarm group number is 255.) At least one AGNE is required per alarm group. One primary AGNE and one backup per alarm group is recommmended. For a network greater than 16 nodes, the AGNE and TL1 GNE should be on separate nodes. The AGNE parameter of the **`set-ne:`** command may have been set to yes on each new shelf during shelf turnup procedures to suppress an `AGNE communication failure` alarm.

Use the **`set-ne:`** command to designate the AGNE(s) and alarm group numbers, as required.

---

11. **NOTE:**
Only **one** remote FiberReach OC-3/OC-12 shelf is allowed in this linear-extension configuration.

NOTE:
If Sync Autoreconfiguration is enabled, the FiberReach shelf that will connect to the WaveStar TDM 2.5G/10G via the **MAIN-1** should be the first of the FiberReach linear extension to connect to the WaveStar TDM 2.5G/10G. If the FiberReach shelf connecting to WaveStar TDM 2.5G/10G via **MAIN-2** is connected first, the FiberReach shelf will remain in holdover until **MAIN-1** is connected.

DO ITEMS BELOW IN ORDER LISTED . . . . . FOR DETAILS, GO TO

Remove the optical loop from the **MAIN OLIU** (for example in Figure 2, FiberReach OC-3/OC-12 node **MAIN-1**) associated with the optical span being established. At the other end of the optical span, remove the optical loop from the associated WaveStar TDM 2.5G/10G **LEY15/LEY16** OC3/STM1 Port Unit or **LEY13/LEY14** OC12/STM4 Port Unit.

---

12. **NOTE:**
The section data communication channel (DCC), used for far end communications, must be enabled at each network element (shelf) optical interface being tested in order for the end-to-end line tests to work. Default condition for the DCC channel is "enabled". If it has been disabled, use the **`set-fecom:`** command **at each shelf** to enable far end communications.

At each FiberReach shelf, use the **`set-fecom:`***`address`***`:com=enabled`** command to ensure far end DCC communications (fecom) is enabled.

At each WaveStar TDM 2.5G/10G shelf, use the **Enable/Disable DCC Terminations, T 305**, procedure to ensure far end DCC communications (fecom) is enabled.

---

13. Perform optical fiber connections and verification of the integrity of the optical span being established. **DLP-514**

DO ITEMS BELOW IN ORDER LISTED . . . . FOR DETAILS, GO TO

14. FiberReach shelves that are part of a subnetwork being partitioned into multiple areas require that the NSAP*AREA* field and level 2 IS-IS routing parameters of the **`ent-ulsdcc-l3:`** command be set. See Section 11, Commands and Reports in 363-206-305, *DDM-2000 FiberReach Multiplexer, Wideband/Narrowband Shelf, TARP Release 3 and Later, User/Service Manual—Volume I*, for an explanation of the command parameters. WaveStar TDM 2.5G/10G shelves that are part of a subnetwork being partitioned into multiple areas require that the L3 Area Address and Level 2 IS parameters be set. See 365-371-110, *WaveStar TDM 2.5G (OC-48), Release 3.0, User Operations Guide or* 365-371-310, *WaveStar TDM 10G (OC-192), (2 Fiber), Release 1.0, User Operations Guide*, for an explanation of the required parameters. See 824-102-144, *Lucent Technologies 2000 Product Family, Operations Interworking Guide For TARP Releases*, for an explanation of the engineering rules for subnetwork partitioning.

    At the FiberReach shelf, use the **`ent-ulsdcc-l3:`** command to designate the NSAP*AREA* field and level 2 IS-IS routing, as required.

    At the WaveStar TDM 2.5G/10G shelf, use the appropriate menu/toolbar to designate the L3 Area address and Level 2 IS parameters, as required.

---

15. **NOTE:**
    The **`rtrv-pm-line:`** command in the following procedure displays performance monitoring data associated with the OC-3/OC-12 lines terminated on the system.

    Perform end-to-end OC-3/OC-12 line test. **DLP-515**

---

16. Repeat this procedure for the OC-3/OC-12 optical span being established in the WaveStar TDM 2.5G/10G to FiberReach OC-3/OC-12 network. Ensure that the last optical span connected to the WaveStar TDM 2.5G/10G host shelf is connected to an **LEY15/LEY16** OC3/STM1 Port Unit or **LEY13/LEY14** OC12/STM4 Port Unit in the opposite slot as the one in the first OC-3/OC-12 span.

DO ITEMS BELOW IN ORDER LISTED . . . . . FOR DETAILS, GO TO

17. **NOTE:**
Establishing service requires that the proper slots in each terminating node be properly equipped with the correct circuit pack(s) for the type of service being established. It also requires numerous cross connections in each of the nodes representing the path of the required service. Additionally, transmission tests should be performed to verify the continuity and quality of the established circuit.

The FiberReach OC-3/OC-12 linear extension is now ready for initial service to be established.
Initial DS1 Service [**System Turnup: NTP-004**]
Initial T1 Service [**System Turnup: NTP-013**]
Initial HDSL Service [**System Turnup: NTP-017**]
Initial DS3 Service [**System Turnup: NTP-025**]
STS-3c Service [**System Turnup: NTP-016**]

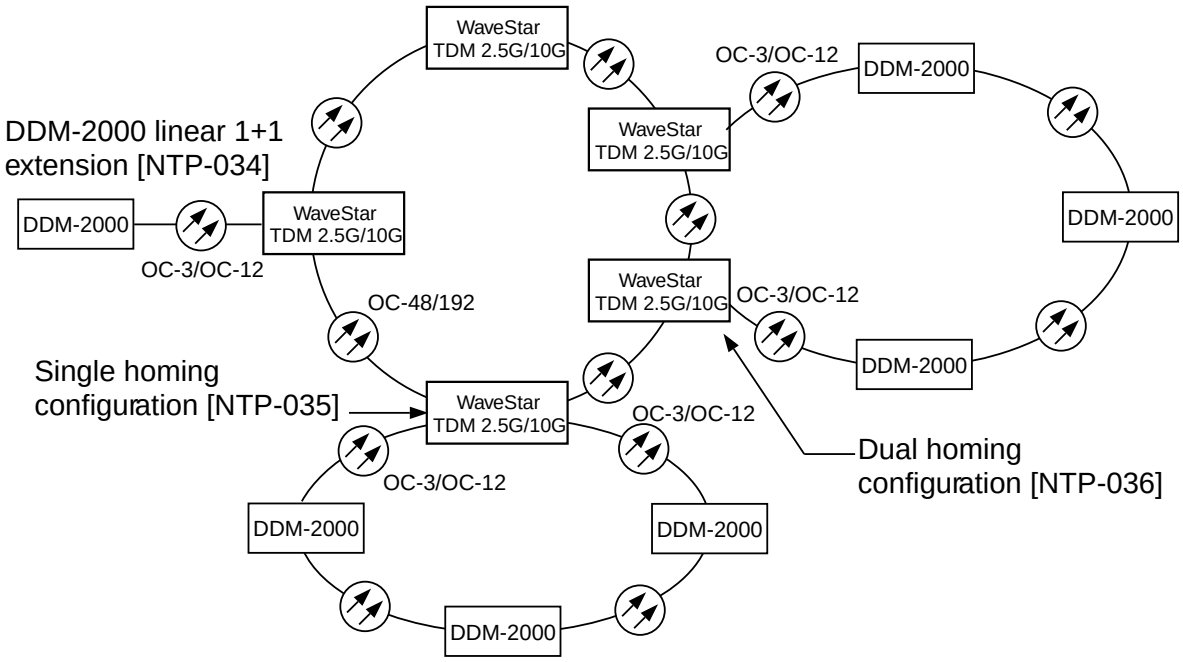

Figure 1 – Example WaveStar TDM 2.5G OC-48 or 10G OC-192/DDM-2000 OC-3/OC-12 Configurations

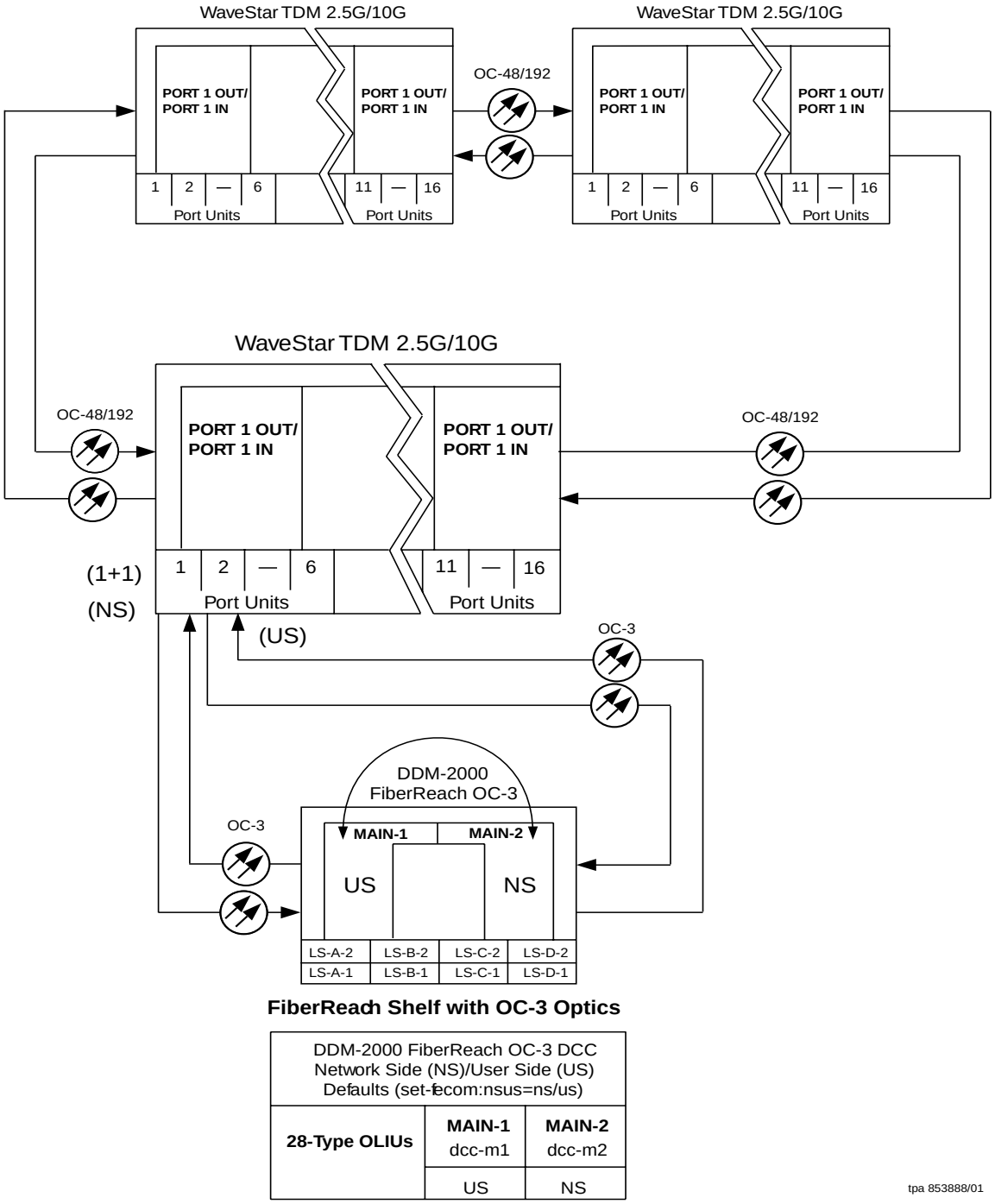

Figure 2 – Example of OC-3 Linear Extension User Side/Network Side Value Settings

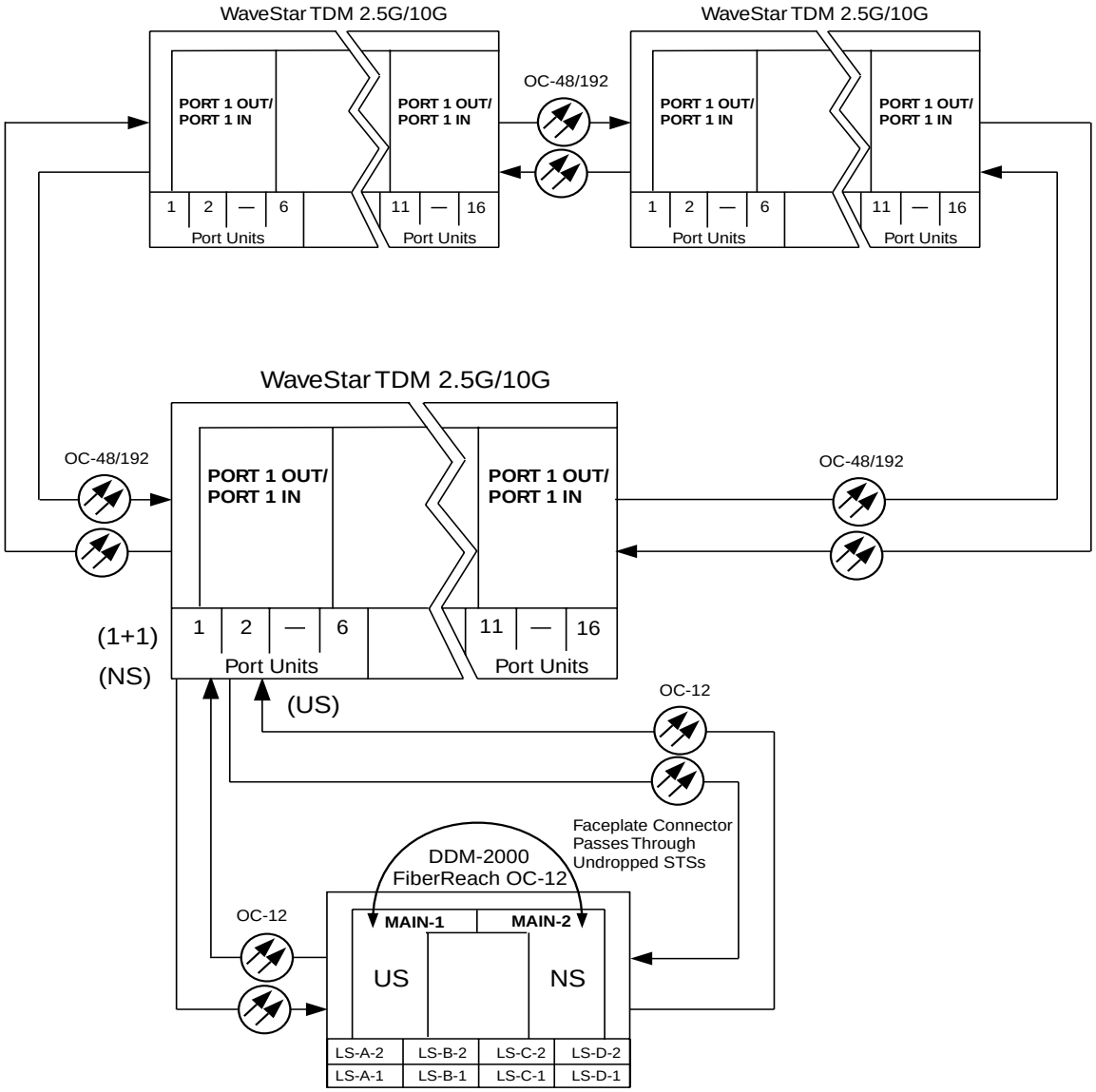

FiberReach Shelf with OC-12 Optics

DDM-2000 FiberReach OC-12 DCC Network Side (NS)/User Side (US) Defaults (set-ecom:nsus=ns/us)		
29-Type OLIUs	**MAIN-1** dcc-m1	**MAIN-2** dcc-m2
	US	NS

Figure 3 – Example of OC-12 Linear Extension User Side/Network Side Value Settings

Establish FiberReach Single-Homed Release 4 OC-3 or OC-12 Access via WaveStar TDM 2.5G OC-48 or 10G OC-192 Backbone Ring

DO ITEMS BELOW IN ORDER LISTED . . . . FOR DETAILS, GO TO

1. **WARNING:**
Unterminated optical connectors may emit invisible laser radiation. Avoid direct exposure to the beam. Do not view beam with optical instruments. Use of controls or adjustments or performance of procedures other than those specified herein may result in hazardous radiation exposure.

CAUTION:
DDM-2000 circuit packs contain static sensitive components which can be damaged by electrostatic discharge. A static ground wrist strap must be worn when handling the circuit packs. See electrostatic discharge considerations in **Trouble Clearing: TAD-100***.*

NOTE:
FiberReach nodes operating at an OC-3 rate require two **28-Type OLIU**s in the **MAIN** slots of the FiberReach shelf.

NOTE:
FiberReach nodes operating at an OC-12 rate require two **29-Type OLIU**s in the **MAIN** slots of the FiberReach shelf.

NOTE:
The **28-Type** and **29-Type OLIU**s require a faceplate interconnect cable assembly, [comcode 847721271].

NOTE:
If the DDM-2000 fails to respond in the indicated manner, refer to **Trouble Clearing: IXL-001**.

DO ITEMS BELOW IN ORDER LISTED . . . . . FOR DETAILS, GO TO

NOTE:
It is assumed that WaveStar TDM 2.5G/10G shelves in the system have passed local tests and the WaveStar TDM 2.5G OC-48 or 10G OC-192 ring has been established. It is also assumed the FiberReach shelves have been equipped and tested (363-206-305, *DDM-2000* FiberReach *Multiplexer, Wideband/Narrowband Shelf, TARP Release 3 and Later, User/Service Manual (TOP)—Volume II*, **System Turnup: NTP-007**).

NOTE:
This procedure is used to establish an FiberReach OC-3/OC-12 single-homed ring connection to an WaveStar TDM 2.5G OC-48 or 10G OC-192 ring (See Figure 1). Other configurations may have to be established to obtain your final configuration. See **NTP-036** for dual-homed ring configurations and **NTP-034** for single OC-3/OC-12 linear extensions from the WaveStar TDM 2.5G/10G **LEY15/LEY16** OC3/STM1 Port Unit or **LEY13/LEY14** OC12/STM4 Port Unit.

Determine the network configuration (for example, see Figure 1.)

---

2. Verify that the host WaveStar TDM 2.5G shelf is equipped with Release 3 or later software or the 10G is equipped with Release 1 or later. If not equipped with Release 3 or 1 or later software, upgrade the WaveStar TDM 2.5G/10G host shelf with proper software. Verify that the FiberReach shelves are equipped with TARP Release 4 ring software. **DLP-531**

---

3. Determine the optical loss of each optical span from office records or by making the required measurements.

---

4. At WaveStar TDM 2.5G/10G, verify/provision the WaveStar TDM 2.5G/10G low speed OC-3/OC-12 slots to “`0X1`", enable DCC channels, and install circuit packs. (See **Create New Optical Port Protection Group, T 302** procedure in 365-371-110, *WaveStar TDM 2.5G (OC-48), Release 3.0, User Operations Guide or* 365-371-310, *WaveStar TDM 10G (OC-192), (2 Fiber), Release 1.0, User Operations Guide)*.

DO ITEMS BELOW IN ORDER LISTED . . . . FOR DETAILS, GO TO

5. Use the **`rtrv-oc3/set-oc3`** or **`rtrv-oc12/set-oc12`** command at the remote FiberReach shelf to verify/set application (*dcc*) parameter for the OC-3/OC-12 **MAIN** slots being used for this OC-3/OC-12 single-homed ring. For example,
`set-oc3:main-1,dcc=`*`distinct`* and
`set-oc3:main-2,dcc=`*`distinct`* or
`set-oc12:main-1,dcc=`*`distinct`* and
`set-oc12:main-2,dcc=`*`distinct`*.

---

6. **NOTE:**
This procedure will establish the FiberReach OC-3/OC-12 single-homed ring starting from the WaveStar TDM 2.5G/10G host node to the OC-3/OC-12 node, then back to the host WaveStar TDM 2.5G/10G node.

   NOTE:
The Network Side (NS)/User Side (US) parameters of the OC-3/OC-12 **`set-fecom:`** command and the WaveStar TDM 2.5G/10G DCC orientation must be set opposite at each end of the optical spans. For example, see Figure 2.

   Use the **`rtrv-fecom/set-fecom`** command at the DDM-2000 or the **Enable/Disable DCC Terminations, T 305**, procedure at the WaveStar TDM 2.5G/10G to verify/set Network Side/User Side parameters at each end of all optical spans being established.

---

7. **NOTE:**
If Kbyte or Sbyte (sync messaging) is enabled for the FiberReach OC-3/OC-12 **`MAIN-1`** and **`MAIN-2`** optical interfaces on the OC-3/OC-12 single-homed ring, it **must** be enabled at all nodes in the WaveStar TDM 2.5G/10G ring.

   NOTE:
The **`rtrv-oc3:`** or **`rtrv-oc12:`** command retrieves the `OC-3 Line Provisioning Report` or `OC-12 Line Provisioning Report`. This report displays the provisioned configuration of OC-3/OC-12 lines. See the Commands and Reports section of this manual for a description of the **`rtrv-oc3:`** or **`rtrv-oc12:`** command format.

DO ITEMS BELOW IN ORDER LISTED. . . . . FOR DETAILS, GO TO

Use the **`rtrv-oc3:`** or **`rtrv-oc12:`** command to obtain the `OC-3 Line Provisioning Report` or `OC-12 Line Provisioning Report` and verify if Kbyte/Sbyte is enabled. Use the **`set-oc3:`** or **`set-oc12:`** command to enable the Kbyte/Sbyte parameter, if required.

---

8. **NOTE:**
If Sync Autoreconfiguration is enabled, Kbyte/Sbyte must also be enabled.

NOTE:
The **`rtrv-sync:`** command retrieves the `Synchronization Report`. This report displays the provisioning and operational information on the synchronization attributes of the DDM-2000. See the Commands and Reports section of this manual for a description of the **`rtrv-sync:`** command format.

Use the **`rtrv-sync:`** command to obtain the `Synchronization Report` and verify if Sync Autoreconfiguration is enabled. Use the **`set-sync:`** command to enable the Sync Autoreconfiguration parameter, if required.

---

9. **NOTE:**
Two or more shelves in the same network **cannot** have the same system name or TID (set by the **`set-ne:`** command).

Verify no duplicate TID settings exist. The **`rtrv-ne:`** command may be used at each shelf in the network to display settings. If duplicates exist, determine new settings and use the **`set-ne:`** command to make new settings.

DO ITEMS BELOW IN ORDER LISTED . . . . FOR DETAILS, GO TO

10. **NOTE:**
FiberReach OC-3/OC-12 hosted shelves with Release 4 software support AGNE(s) and alarm groups. WaveStar TDM 2.5G OC-48 or 10G OC-192 host shelves with Release 3 or 1 software do **not** support these features and will **not** appear in the alarm groups of a network with mixed software.

NOTE:
The Remote NE Status (**`rnestat`**) parameter of the **`set-ne:`** command must be enabled prior to designating the AGNE(s) and alarm group numbers.

NOTE:
Shelves may be designated as an alarm gateway network element (AGNE) and assigned an alarm group number. (Default alarm group number is 255.) At least one AGNE is required per alarm group. One primary AGNE and one backup per alarm group is recommmended. For a network greater than 16 nodes, the AGNE and TL1 GNE should be on separate nodes. The AGNE parameter of the **`set-ne:`** command may have been set to yes on each new shelf during shelf turnup procedures to suppress an `AGNE communication failure` alarm.

Use the **`set-ne:`** command to designate the AGNE(s) and alarm group numbers, as required.

---

11. **NOTE:**
Only **one** remote FiberReach OC-3/OC-12 shelf is allowed in this single-homed ring configuration.

NOTE:
If Sync Autoreconfiguration is enabled, the FiberReach shelf that will connect to the WaveStar TDM 2.5G/10G via the **MAIN-1** should be the first of the FiberReach ring to connect to the WaveStar TDM 2.5G/10G. If the FiberReach shelf connecting to WaveStar TDM 2.5G/10G via **MAIN-2** is connected first, the FiberReach shelf will remain in holdover until **MAIN-1** is connected.

DO ITEMS BELOW IN ORDER LISTED . . . . . FOR DETAILS, GO TO

Remove the optical loop from the **MAIN OLIU** (for example in Figure 2, FiberReach OC-3/OC-12 node **MAIN-1**) associated with the optical span being established. At the other end of the optical span, remove the optical loop from the associated WaveStar TDM 2.5G/10G **LEY15/LEY16** OC3/STM1 Port Unit or **LEY13/LEY14** OC12/STM4 Port Unit.

---

12. **NOTE:**
The section data communication channel (DCC), used for far end communications, must be enabled at each network element (shelf) optical interface being tested in order for the end-to-end line tests to work. Default condition for the DCC channel is "enabled". If it has been disabled, use the **`set-fecom:`** command **at each shelf** to enable far end communications.

At each DDM-2000 shelf, use the **`set-fecom:`***`address`***`:com=enabled`** command to ensure far end DCC communications (fecom) is enabled.

At each WaveStar TDM 2.5G/10G shelf, use the **Enable/Disable DCC Terminations, T 305**, procedure to ensure far end DCC communications (fecom) is enabled.

---

13. Perform optical fiber connections and verification of the integrity of the optical span being established. **DLP-514**

DO ITEMS BELOW IN ORDER LISTED . . . . FOR DETAILS, GO TO

14. FiberReach shelves that are part of a subnetwork being partitioned into multiple areas require that the NSAP*AREA* field and level 2 IS-IS routing parameters of the **`ent-ulsdcc-l3:`** command be set. See Section 11, Commands and Reports in 363-206-305, *DDM-2000 FiberReach Multiplexer, Wideband/Narrowband Shelf, TARP Release 3 and Later, User/Service Manual—Volume I*, for an explanation of the command parameters. WaveStar TDM 2.5G/10G shelves that are part of a subnetwork being partitioned into multiple areas require that the L3 Area Address and Level 2 IS parameters be set. See 365-371-110, *WaveStar TDM 2.5G (OC-48), Release 3.0, User Operations Guide or* 365-371-310, *WaveStar TDM 10G (OC-192), (2 Fiber), Release 1.0, User Operations Guide*, for an explanation of the required parameters. See 824-102-144, *Lucent Technologies 2000 Product Family, Operations Interworking Guide For TARP Releases*, for an explanation of the engineering rules for subnetwork partitioning.

    At the FiberReach shelf, use the **`ent-ulsdcc-l3:`** command to designate the NSAP*AREA* field and level 2 IS-IS routing, as required.

    At the WaveStar TDM 2.5G/10G shelf, use the appropriate menu/toolbar to designate the L3 Area address and Level 2 IS parameters, as required.

---

15. **NOTE:**
    The **`rtrv-pm-line:`** command in the following procedure displays performance monitoring data associated with the OC-3/OC-12 lines terminated on the system.

    Perform end-to-end OC-3/OC-12 line test. **DLP-515**

---

16. Repeat this procedure for the OC-3/OC-12 optical span being established in the WaveStar TDM 2.5G/10G to FiberReach OC-3/OC-12 network. Ensure that the last optical span connected to the WaveStar TDM 2.5G/10G host shelf is connected to an **LEY15/LEY16** OC3/STM1 Port Unit or **LEY13/LEY14** OC12/STM4 Port Unit in the opposite slot as the one in the first OC-3/OC-12 span.

DO ITEMS BELOW IN ORDER LISTED . . . . . FOR DETAILS, GO TO

17. **NOTE:**
Establishing service requires that the proper slots in each terminating node be properly equipped with the correct circuit pack(s) for the type of service being established. It also requires numerous cross connections in each of the nodes representing the path of the required service. Additionally, transmission tests should be performed to verify the continuity and quality of the established circuit.

The single-homed OC-3/OC-12 access network is now ready for initial service to be established.
Initial DS1 Service [**System Turnup: NTP-004**]
Initial T1 Service [**System Turnup: NTP-013**]
Initial HDSL Service [**System Turnup: NTP-017**]
Initial DS3 Service [**System Turnup: NTP-025**]
STS-3c Service [**System Turnup: NTP-016**]

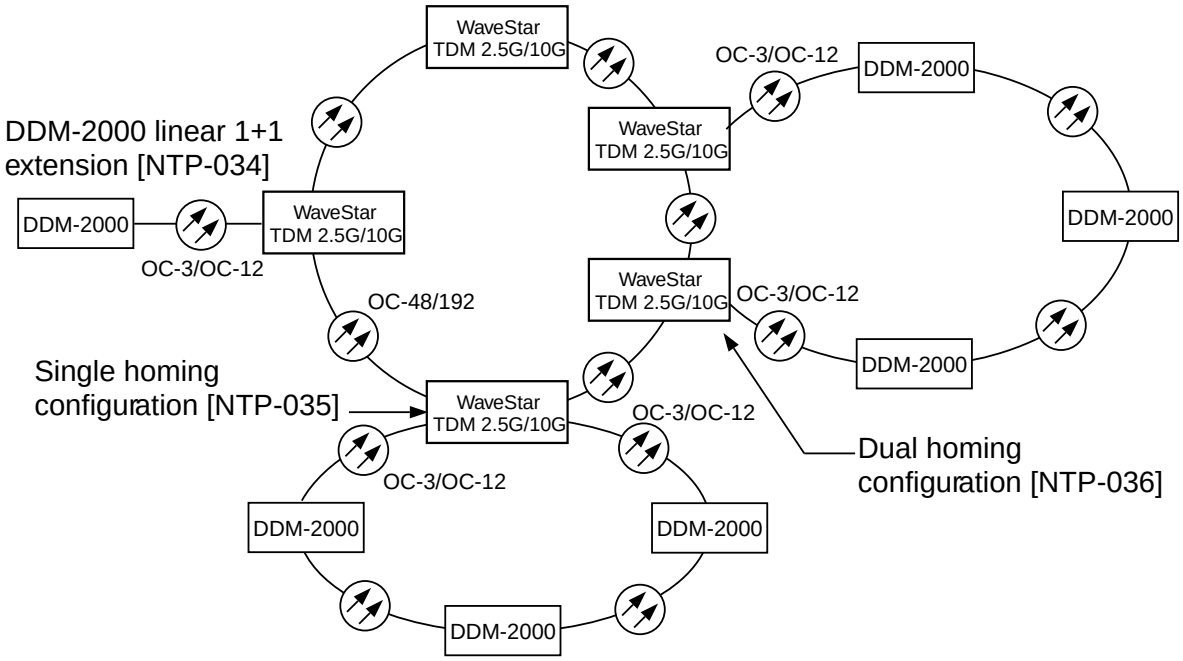

Figure 1 – Example WaveStar TDM 2.5G OC-48 or 10G OC-192/DDM-2000 OC-3/OC-12 Configurations

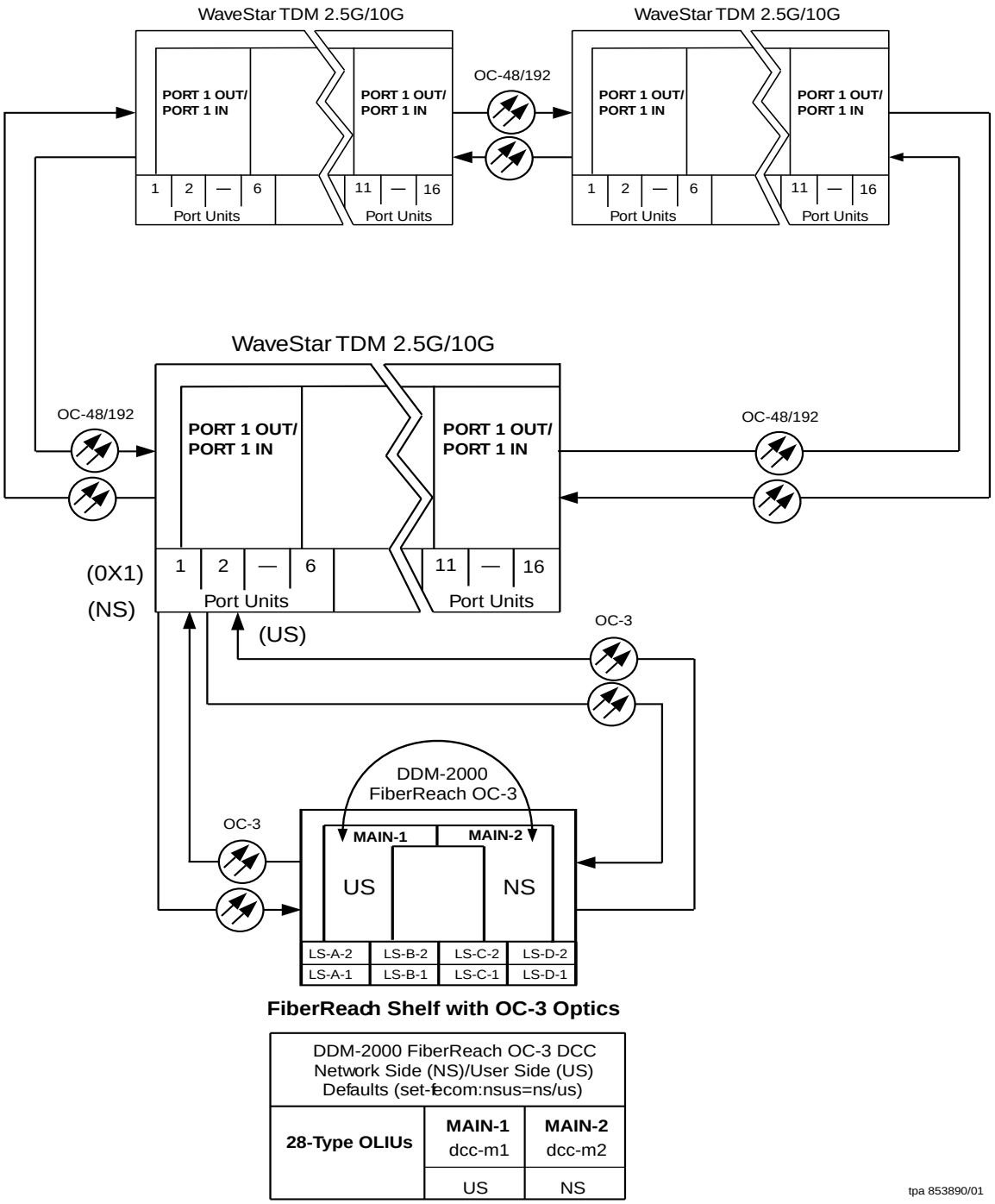

Figure 2 – Example of OC-3 Single Homed User Side/Network Side Value Settings

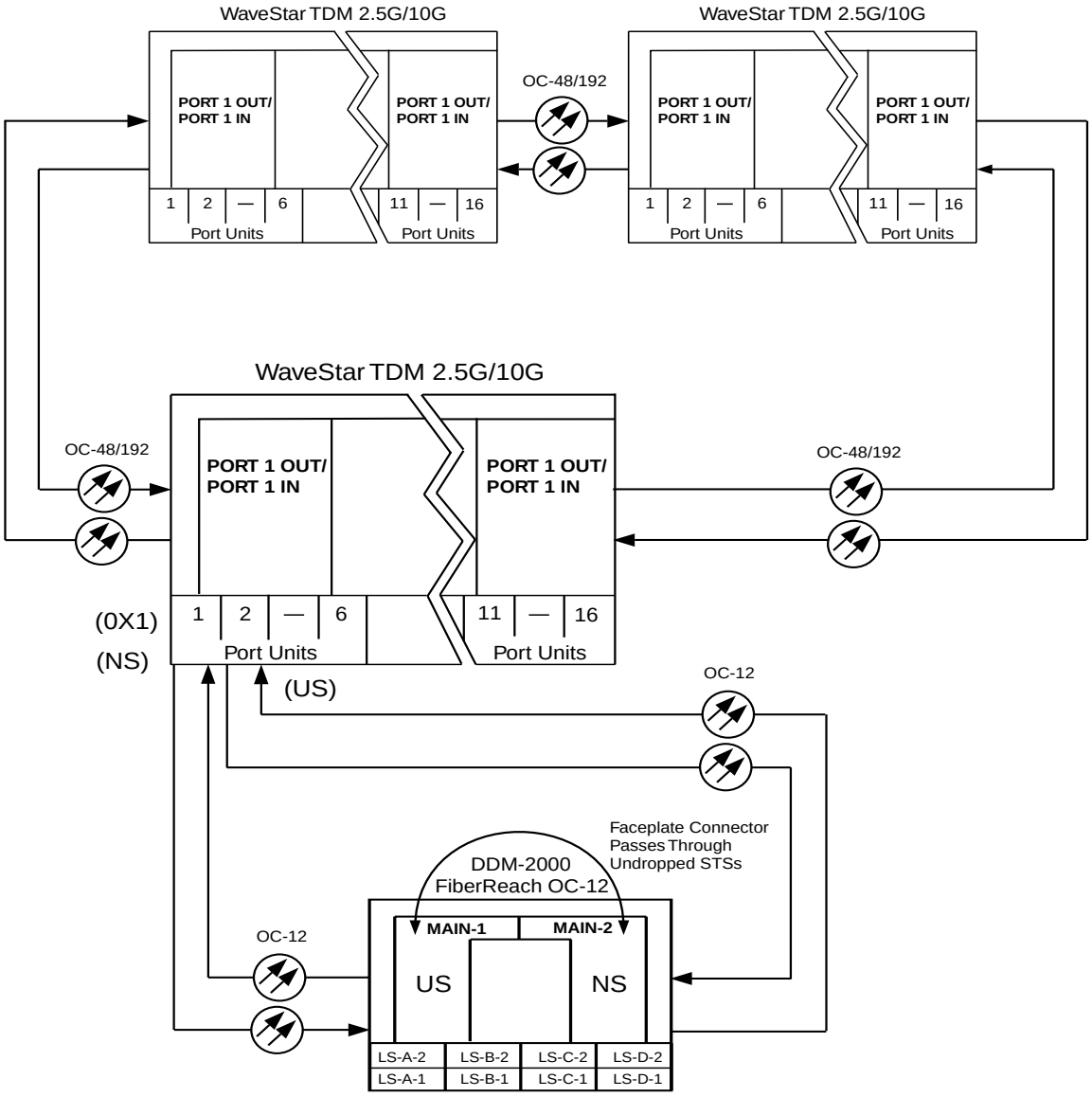

FiberReach Shelf with OC-12 Optics

DDM-2000 FiberReach OC-12 DCC Network Side (NS)/User Side (US) Defaults (set-fecom:nsus=ns/us)		
29-Type OLIUs	**MAIN-1** dcc-m1	**MAIN-2** dcc-m2
	US	NS

Figure 3 – Example of OC-12 Single Homed User Side/Network Side Value Settings

Establish FiberReach Dual-Homed Release 4 OC-3 or OC-12 Access via WaveStar TDM 2.5G OC-48 or 10G OC-192 Backbone Ring

DO ITEMS BELOW IN ORDER LISTED . . . . FOR DETAILS, GO TO

1. **WARNING:**
Unterminated optical connectors may emit invisible laser radiation. Avoid direct exposure to the beam. Do not view beam with optical instruments. Use of controls or adjustments or performance of procedures other than those specified herein may result in hazardous radiation exposure.

CAUTION:
DDM-2000 circuit packs contain static sensitive components which can be damaged by electrostatic discharge. A static ground wrist strap must be worn when handling the circuit packs. See electrostatic discharge considerations in **Trouble Clearing: TAD-100***.*

NOTE:
FiberReach nodes operating at an OC-3 rate require two **28-Type OLIU**s in the **MAIN** slots of the FiberReach shelf.

NOTE:
FiberReach nodes operating at an OC-12 rate require two **29-Type OLIU**s in the **MAIN** slots of the FiberReach shelf.

NOTE:
The **28-Type** and **29-Type OLIU**s require a faceplate interconnect cable assembly, [comcode 847721271].

NOTE:
If the DDM-2000 fails to respond in the indicated manner, refer to **Trouble Clearing: IXL-001**.

DO ITEMS BELOW IN ORDER LISTED . . . . . FOR DETAILS, GO TO

NOTE:
It is assumed that WaveStar TDM 2.5G/10G shelves in the system have passed local tests and the WaveStar TDM 2.5G OC-48 or 10G OC-192 ring has been established. It is also assumed the FiberReach shelves have been equipped and tested (363-206-305, *DDM-2000* FiberReach *Multiplexer, Wideband/Narrowband Shelf, TARP Release 3 and Later, User/Service Manual (TOP)—Volume II*, **System Turnup: NTP-007**).

NOTE:
This procedure is used to establish an FiberReach OC-3/OC-12 dual-homed ring connection to an WaveStar TDM 2.5G OC-48 or 10G OC-192 ring (See Figure 1). Other configurations may have to be established to obtain your final configuration. See **NTP-035** for single-homed ring configurations and **NTP-034** for single OC-3/OC-12 linear extensions from the WaveStar TDM 2.5G/10G **LEY15/LEY16** OC3/STM1 Port Unit or **LEY13/LEY14** OC12/STM4 Port Unit.

Determine the network configuration (for example, see Figure 1.)

2. Verify that the host WaveStar TDM 2.5G shelf is equipped with Release 3 or later software or the 10G is equipped with Release 1 or later. If not equipped with Release 3 or 1 or later software, upgrade the WaveStar TDM 2.5G/10G host shelf with proper software. Verify that the FiberReach shelves are equipped with TARP Release 4 ring software. **DLP-531**

3. Determine the optical loss of each optical span from office records or by making the required measurements.

4. At WaveStar TDM 2.5G/10G, verify/provision the WaveStar TDM 2.5G/10G low speed OC-3/OC-12 slots to "`0X1`", enable DCC channels, and install circuit packs. (See **Create New Optical Port Protection Group, T 302** procedure in 365-371-110, *WaveStar TDM 2.5G (OC-48), Release 3.0, User Operations Guide or* 365-371-310, *WaveStar TDM 10G (OC-192), (2 Fiber), Release 1.0, User Operations Guide)*.

DO ITEMS BELOW IN ORDER LISTED . . . . FOR DETAILS, GO TO

5. Use the **`rtrv-oc3/set-oc3`** or **`rtrv-oc12/set-oc12`** command at the remote FiberReach shelf to verify/set application (*dcc*) parameter for the OC-3/OC-12 **MAIN** slots being used for this OC-3/OC-12 dual-homed ring. For example,
   `set-oc3:main-1,dcc=`*`distinct`* and
   `set-oc3:main-2,dcc=`*`distinct`* or
   `set-oc12:main-1,dcc=`*`distinct`* and
   `set-oc12:main-2,dcc=`*`distinct`*.

---

6. **NOTE:**
   This procedure will establish the OC-3/OC-12 dual-ring configuration starting from the WaveStar TDM 2.5G/10G host node (far end) to the first FiberReach OC-3/OC-12 node (near end), then continuing to the next FiberReach OC-3/OC-12 node until the final connection is made from the last FiberReach OC-3/OC-12 node back to the host WaveStar TDM 2.5G/10G node.

   NOTE:
   The Network Side (NS)/User Side (US) parameters of the OC-3/OC-12 **`set-fecom:`** command and the WaveStar TDM 2.5G/10G DCC orientation must be set opposite at each end of the optical spans. For example, see Figure 2.

   Use the **`rtrv-fecom/set-fecom`** command at the DDM-2000 or the **Enable/Disable DCC Terminations, T 305**, procedure at the WaveStar TDM 2.5G/10G to verify/set Network Side/User Side parameters at each end of all optical spans being established.

---

7. **NOTE:**
   If Kbyte or Sbyte (sync messaging) is enabled for the FiberReach OC-3/OC-12 **`MAIN-1`** and **`MAIN-2`** optical interfaces on the OC-3/OC-12 dual-homed ring, it **must** be enabled at all nodes in the WaveStar TDM 2.5G/10G ring.

DO ITEMS BELOW IN ORDER LISTED. . . . . FOR DETAILS, GO TO

NOTE:
The **`rtrv-oc3:`** or **`rtrv-oc12:`** command retrieves the `OC-3 Line Provisioning Report` or `OC-12 Line Provisioning Report`. This report displays the provisioned configuration of OC-3/OC-12 lines. See the Commands and Reports section of this manual for a description of the **`rtrv-oc3:`** or **`rtrv-oc12:`** command format.

Use the **`rtrv-oc3:`** or **`rtrv-oc12:`** command to obtain the `OC-3 Line Provisioning Report` or `OC-12 Line Provisioning Report` and verify if Kbyte/Sbyte is enabled. Use the **`set-oc3:`** or **`set-oc12:`** command to enable the Kbyte/Sbyte parameter, if required.

---

8. **NOTE:**
If Sync Autoreconfiguration is enabled, Kbyte/Sbyte must also be enabled.

NOTE:
The **`rtrv-sync:`** command retrieves the `Synchronization Report`. This report displays the provisioning and operational information on the synchronization attributes of the DDM-2000. See the Commands and Reports section of this manual for a description of the **`rtrv-sync:`** command format.

Use the **`rtrv-sync:`** command to obtain the `Synchronization Report` and verify if Sync Autoreconfiguration is enabled. Use the **`set-sync:`** command to enable the Sync Autoreconfiguration parameter, if required.

---

9. **NOTE:**
Two or more shelves in the same network **cannot** have the same system name or TID (set by the **`set-ne:`** command).

Verify no duplicate TID settings exist. The **`rtrv-ne:`** command may be used at each shelf in the network to display settings. If duplicates exist, determine new settings and use the **`set-ne:`** command to make new settings.

DO ITEMS BELOW IN ORDER LISTED . . . . FOR DETAILS, GO TO

10. **NOTE:**
FiberReach OC-3/OC-12 hosted shelves with Release 4 software support AGNE(s) and alarm groups. WaveStar TDM 2.5G OC-48 or 10G OC-192 host shelves with Release 3 or 1 software do **not** support these features and will **not** appear in the alarm groups of a network with mixed software.

NOTE:
The Remote NE Status (**`rnestat`**) parameter of the **`set-ne:`** command must be enabled prior to designating the AGNE(s) and alarm group numbers.

NOTE:
Shelves may be designated as an alarm gateway network element (AGNE) and assigned an alarm group number. (Default alarm group number is 255.) At least one AGNE is required per alarm group. One primary AGNE and one backup per alarm group is recommmended. For a network greater than 16 nodes, the AGNE and TL1 GNE should be on separate nodes. The AGNE parameter of the **`set-ne:`** command may have been set to yes on each new shelf during shelf turnup procedures to suppress an `AGNE communication failure` alarm.

Use the **`set-ne:`** command to designate the AGNE(s) and alarm group numbers, as required.

---

11. **NOTE:**
Multiple FiberReach OC-3/OC-12 shelves are allowed in this dual-homed configuration.

NOTE:
If Sync Autoreconfiguration is enabled, the FiberReach shelf that will connect to the WaveStar TDM 2.5G/10G via the **MAIN-1** should be the first of the FiberReach ring to connect to the WaveStar TDM 2.5G/10G. If the FiberReach shelf connecting to WaveStar TDM 2.5G/10G via **MAIN-2** is connected first, the FiberReach shelf will remain in holdover until **MAIN-1** is connected.

DO ITEMS BELOW IN ORDER LISTED . . . . . FOR DETAILS, GO TO

Remove the optical loop from the **MAIN OLIU** (for example in Figure 2, FiberReach OC-3/OC-12 node **MAIN-1**) associated with the optical span being established. At the other end of the optical span, remove the optical loop from the associated WaveStar TDM 2.5G/10G **LEY15/LEY16** OC3/STM1 Port Unit or **LEY13/LEY14** OC12/STM4 Port Unit.

---

12. **NOTE:**
The section data communication channel (DCC), used for far end communications, must be enabled at each network element (shelf) optical interface being tested in order for the end-to-end line tests to work. Default condition for the DCC channel is "enabled". If it has been disabled, use the **`set-fecom:`** command **at each shelf** to enable far end communications.

At each DDM-2000 shelf, use the **`set-fecom:`***`address`***`:com=enabled`** command to ensure far end DCC communications (fecom) is enabled.

At each WaveStar TDM 2.5G/10G shelf, use the **Enable/Disable DCC Terminations, T 305**, procedure to ensure far end DCC communications (fecom) is enabled.

---

13. Perform optical fiber connections and verification of the integrity of the optical span being established. **DLP-514**

DO ITEMS BELOW IN ORDER LISTED . . . . FOR DETAILS, GO TO

14. FiberReach shelves that are part of a subnetwork being partitioned into multiple areas require that the NSAP*AREA* field and level 2 IS-IS routing parameters of the **`ent-ulsdcc-l3:`** command be set. See Section 11, Commands and Reports in 363-206-305, *DDM-2000 FiberReach Multiplexer, Wideband/Narrowband Shelf, TARP Release 3 and Later, User/Service Manual—Volume I*, for an explanation of the command parameters. WaveStar TDM 2.5G/10G shelves that are part of a subnetwork being partitioned into multiple areas require that the L3 Area Address and Level 2 IS parameters be set. See 365-371-110, *WaveStar TDM 2.5G (OC-48), Release 3.0, User Operations Guide or* 365-371-310, *WaveStar TDM 10G (OC-192), (2 Fiber), Release 1.0, User Operations Guide*, for an explanation of the required parameters. See 824-102-144, *Lucent Technologies 2000 Product Family, Operations Interworking Guide For TARP Releases*, for an explanation of the engineering rules for subnetwork partitioning.

    At the FiberReach shelf, use the **`ent-ulsdcc-l3:`** command to designate the NSAP*AREA* field and level 2 IS-IS routing, as required.

    At the WaveStar TDM 2.5G/10G shelf, use the appropriate menu/toolbar to designate the L3 Area address and Level 2 IS parameters, as required.

---

15. **NOTE:**
    The **`rtrv-pm-line:`** command in the following procedure displays performance monitoring data associated with the OC-3/OC-12 lines terminated on the system.

    Perform end-to-end OC-3/OC-12 line test. **DLP-515**

---

16. Repeat this procedure for the OC-3/OC-12 optical span being established in the WaveStar TDM 2.5G/10G to FiberReach OC-3/OC-12 network. Ensure that the last optical span connected to the WaveStar TDM 2.5G/10G host shelf is connected to an **LEY15/LEY16** OC3/STM1 Port Unit or **LEY13/LEY14** OC12/STM4 Port Unit in the opposite slot as the one in the first OC-3/OC-12 span (for example, slot **1** at one node and slot **16** at the other node).

DO ITEMS BELOW IN ORDER LISTED . . . . . FOR DETAILS, GO TO

17. **NOTE:**
Establishing service requires that the proper slots in each terminating node be properly equipped with the correct circuit pack(s) for the type of service being established. It also requires numerous cross connections in each of the nodes representing the path of the required service. Additionally, transmission tests should be performed to verify the continuity and quality of the established circuit.

The dual-homed OC-3/OC-12 access network is now ready for initial service to be established.
Initial DS1 Service [**System Turnup: NTP-004**]
Initial T1 Service [**System Turnup: NTP-013**]
Initial HDSL Service [**System Turnup: NTP-017**]
Initial DS3 Service [**System Turnup: NTP-025**]
STS-3c Service [**System Turnup: NTP-016**]

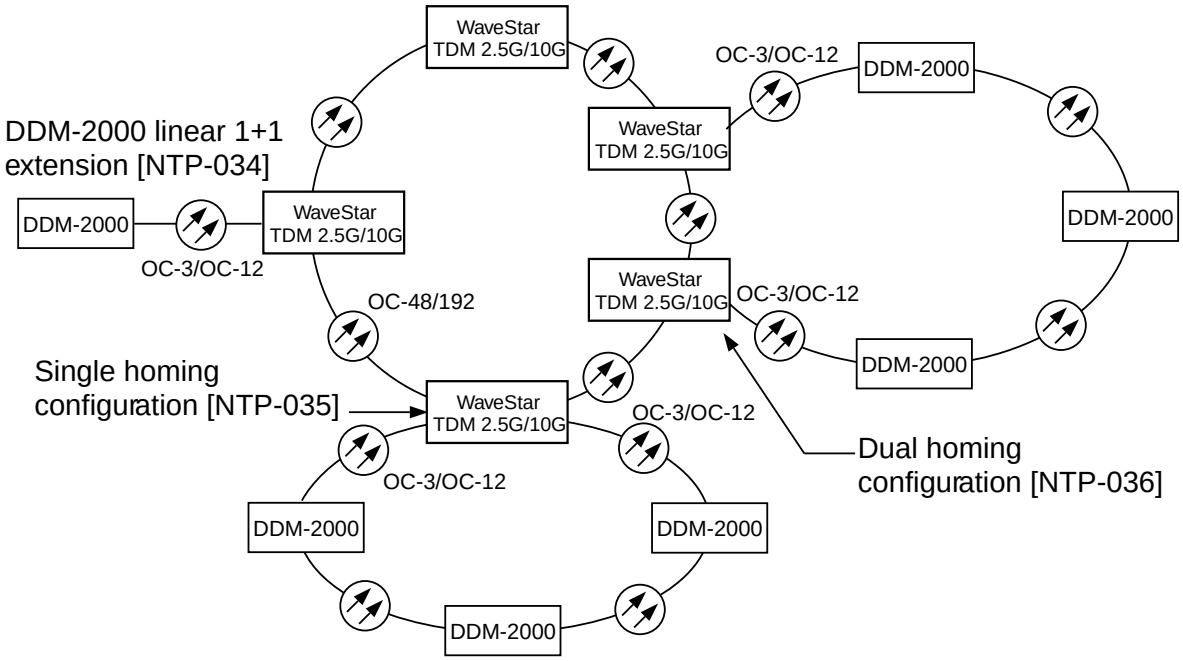

Figure 1 – Example WaveStar TDM 2.5G OC-48 or 10G OC-192/DDM-2000 OC-3/OC-12 Configurations

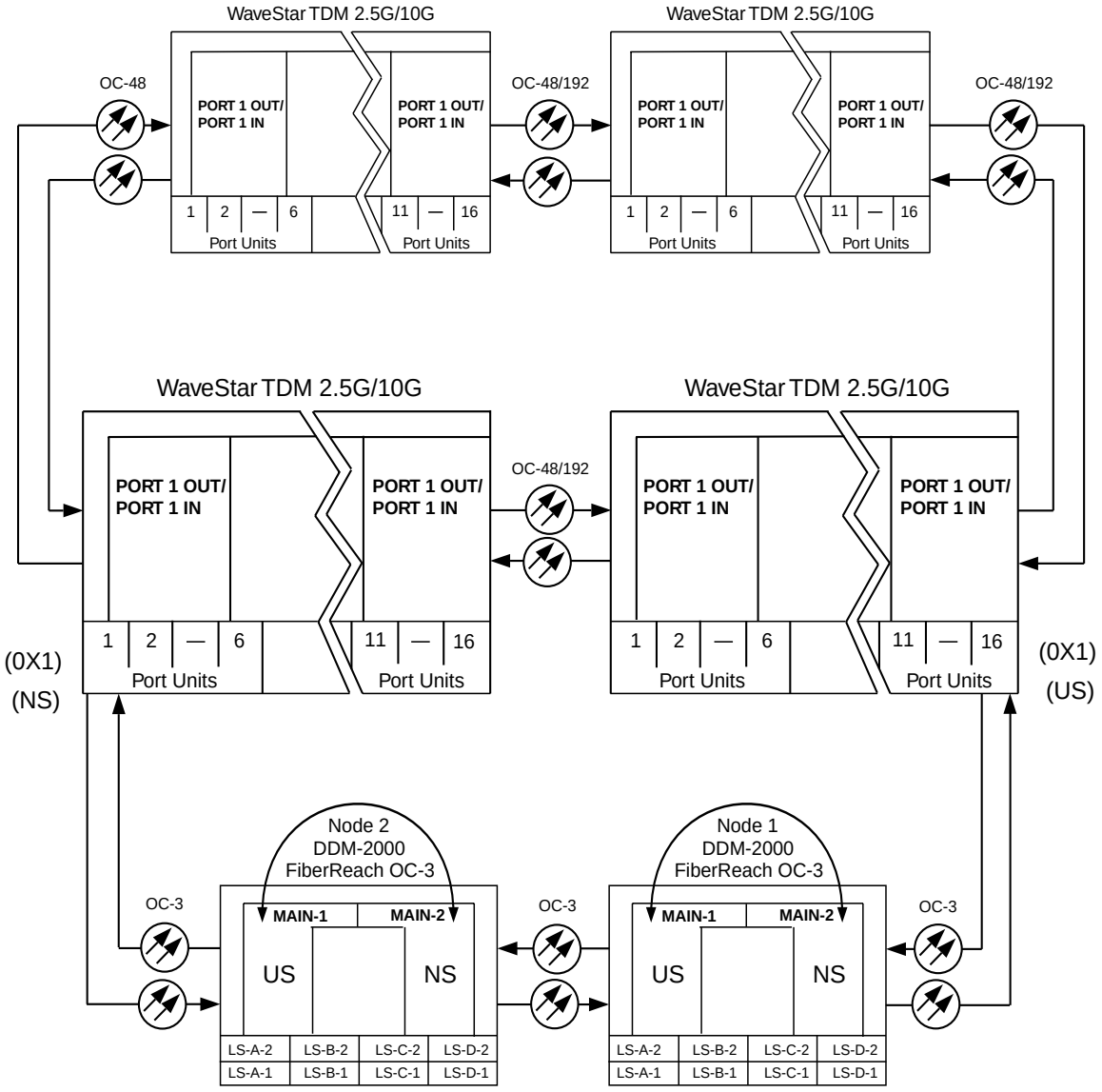

FiberReach Shelves with OC-3 Optics

DDM-2000 FiberReach OC-3 DCC Network Side (NS)/User Side (US) Defaults (set-ecom:nsus=ns/us)		
28-Type OLIUs	**MAIN-1** dcc-m1	**MAIN-2** dcc-m2
	US	NS

tpa 853892/01

Figure 2 – Example of OC-3 Dual Homed User Side/Network Side Value Settings

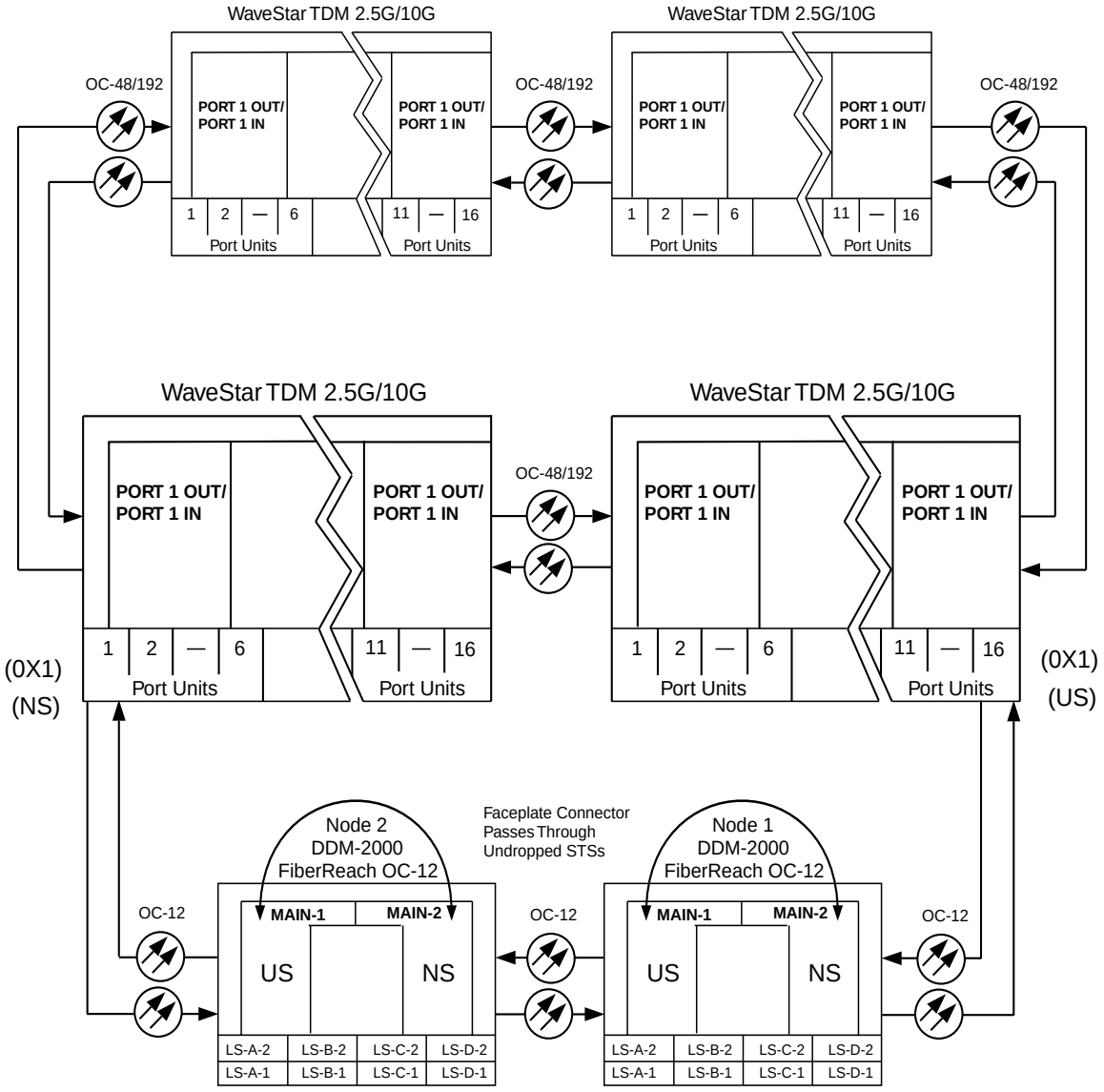

FiberReach Shelves with OC-12 Optics

DDM-2000 FiberReach OC-12 DCC Network Side (NS)/User Side (US) Defaults (set-fecom:nsus=ns/us)		
29-Type OLIUs	**MAIN-1** dcc-m1	**MAIN-2** dcc-m2
	US	NS

Figure 3 – Example of OC-12 Dual Homed User Side/Network Side Value Settings

Task Index
Operation

FIND YOUR JOB IN THE LIST BELOW . . . . . THEN GO TO

Operation Procedures

CIT — Connect and Establish Session. . . . . Detailed Level Procedure: DLP-521

CIT — Activate System Features . . . . . Detailed Level Procedure: DLP-512

CIT — Enable or Disable System Security
and/or Edit, Delete, or Enter a User's Login . . . Detailed Level Procedure: DLP-500

Copy Diskettes and Make Backups . . . . . Detailed Level Procedure: DLP-534

Establish Remote Login . . . . . Detailed Level Procedure: DLP-522

Fuse — Remove –48V DC User Panel. . . . . Detailed Level Procedure: DLP-511

Generic Software Version ID - Retrieve . . . . . Detailed Level Procedure: DLP-531

Install SYSCTL — New Shelf . . . . . Detailed Level Procedure: DLP-539

Install Software Generic Program —
Network Element Software
New Shelf Installation
Only BBG8/BBG8B SYSCTL Installed . . . . . Detailed Level Procedure: DLP-525

Install New Software Generic Program —
Network Element Software
Local Shelf Download
In-Service System. . . . . Detailed Level Procedure: DLP-536

Install New Software Generic Program —
Network Element Software
Remote Shelf Download
In-Service System. . . . . Detailed Level Procedure: DLP-537

Introduction to the PC . . . . . Detailed Level Procedure: DLP-533
OLIU Receiver Sensitivity - Test . . . . . Detailed Level Procedure: DLP-506
Replace SYSCTL — In Service . . . . . Detailed Level Procedure: DLP-501
Test LEDs. . . . . Detailed Level Procedure: DLP-509

Reference Only Procedures

Option Settings — Check (Set) . . . . . Detailed Level Procedure: DLP-513
Replace Circuit Pack (Reference Only) . . . . . Detailed Level Procedure: DLP-523

Task Index
Trouble Clearing

FIND YOUR JOB IN THE LIST BELOW . . . . . THEN GO TO

Trouble Analysis Procedures

Maintenance Philosophy TAD-100
ABN Indication — Clear TAP-109
FAULT Indication (Flashing) — Clear TAP-110
Alarm — Critical (CR) Clear TAP-101
Alarm — Major (MJ) Clear TAP-102
Alarm — Minor (MN) Clear TAP-112
Alarm — NE ACTY Only — Clear TAP-117
Alarm — Power Minor (PMN) — Clear TAP-104
Clear Brownout Condition
Flashing L in FE ID Display TAP-119
Clear Multiple Failure TAP-103
Clear Obscure Failure Condition TAP-108
Clear OLIU or Fiber Trouble -
Path Protected Ring/1+1 Linear Extension TAP-111
Clear Obscure Minor (MN) Alarm TAP-113
Clear External Minor Alarm at RT TAP-114
Clear LED Test Trouble TAP-115
Clear STS/VT AIS Alarm Conditions TAP-118
Isolate and Clear Failure TAP-106
Trouble Report - Clear TAP-105
Trouble During Network Element Program Upgrade - Clear TAP-116

Maintenance Philosophy

Overview

The maintenance philosophy for TARP Release 3 and later is built on gathering system information at two levels. The first is through an Operation System or Graphical User Interface through a DDM-2000 FiberReach [TL1 (X.25), ITM-SNC, CPro-2000, etc.]. Trouble indications obtained from these interfaces are analyzed at the operations center and trouble reports issued. For more information on TL1 interfaces, see 824-102-151 *Operations System Engineering Guide (OSEG)* and 824-102-144*, Lucent Technologies 2000 Product Family, Operations Interworking Guide For TARP Releases.* For ITM-SNC, see 107-564-288, *ITM-SNC System Administration Guide*, and 190-223-100, *ITM-SNC User Guide.* For CPro-2000, see 190-523-xxx (release dependent), *Cpro-2000 User Manual*.

Operations center personnel can use the OSEG and the **`rtrv-alm`** Report Descriptions in the Commands and Reports section of this User/Service manual to assess the severity and meaning of alarm messages received at the operations interface. After analyzing the reports, center personnel may dispatch someone to the site indicating a local alarm condition. The trouble clearing procedures in this manual assume that troubles have been isolated to a particular node and are being used by technicians that have been dispatched to the site.

The second level of maintenance is a local visual inspection of the user panel and circuit pack LEDs, then using a CIT interface to retrieve detailed alarm reports.

Trouble Analysis Procedures

The trouble analysis procedures in this document involve replacing faulty circuit packs and obtaining performance reports and/or alarm and status reports for analysis to determine proper system operation and/or trouble. After determining the alarm level (Critical, Major, Minor, etc.) or trouble indication, the technician accesses the proper trouble analysis procedure (TAP) from **Trouble Clearing: IXL-001**. If the trouble cannot be corrected or identified using these procedures, the procedures direct the technician to obtain assistance because no more step-action procedural data is known for the specific trouble.

RTAC Assistance

The technician must make the decision regarding trouble analysis, corrective action, and obtaining assistance. The technician or local technical support staff may choose to continue trouble analysis based on their knowledge or experience on the DDM-2000 system, or may elect to obtain assistance by calling the Regional Technical Assistance Center at 1-800-225-RTAC.

Circuit Pack Failures

Circuit pack failures are identified by LEDs and reported by system alarms and/or by manual or automatic diagnostic reports. When this occurs, a determination must be made as to why a circuit pack has failed. One recommendation as a first step for determining the cause of a failure is to unseat and then reseat the suspected circuit pack. For example, if a DS3 circuit pack is reported faulty, that circuit pack should be unseated and then reseated before being returned as defective. This will cause an automatic recovery and diagnostic operation to be performed on that DS3 circuit pack. If there is a contact problem such as dirt, oil, or lack of total contact connection, then this may be corrected by reseating and thus avoiding the return of a good unit for repair. Use caution when unseating circuit packs. For example, ensure protection switching is available for circuit pack being removed.

When circuit packs are replaced in some sequence to clear a trouble, they should be replaced one at at time by installing the original circuit packs if they were found to be operational.

Electrostatic Discharge (ESD) Considerations

Any integrated circuit on a circuit pack can be damaged by static electricity that builds up within a work area, particularly in areas with low relative humidity. This static buildup on work surfaces and on personnel and their clothing is produced by the various charging effects of even simple movements and by contact between various objects.

As a rule, the greatest potential for electrostatic damage occurs in areas with the lowest relative humidity. But, because such damage can occur anywhere, all personnel handling circuit packs should take the following precautions:

1. Since materials such as food wrappers, plastics, and Styrofoam containers tend to generate static electricity, keep them away from all circuit packs.
2. Be sure to read all warning labels on bags and cartons before opening any packaging.
3. If possible, open all circuit packs at a static-safe work position using properly grounded wrist straps and table mats that can dissipate static electricity.
4. Whenever possible, wait to remove circuit packs from their protective antistatic packaging until it is time to insert them into a bay.
5. Never touch a circuit pack's components, conductors, or connector pins. Handle all circuit packs only by the faceplate or latch or by the top and bottom outermost edges.
6. When opening and handling circuit packs or when working on backplanes, always wear a grounded wrist strap or wear a heel strap and stand on a grounded floor mat that can dissipate static electricity.
7. Always store and transport circuit packs in static-safe packages. (Shielding is not required unless specified.)
8. Whenever you remove circuit packs from a shelf, immediately put them into static-safe packages.
9. Try to keep relative humidity above 20 percent.
10. DDM-2000 shelves are equipped with grounding jacks for connecting static ground wrist straps. The jacks are located on the bottoms of the user panels.

Clear Critical (CR) Alarm

1. Connect the CIT to the **CIT** connector on the near-end User Panel and log in to the near-end system, if not already performed.

   Reference: **DLP-521**

2. **NOTE:**
   The **`rtrv-alm`** command can be used to display a report of active alarm and status conditions. The Commands and Reports section of this manual gives a description of the command.

   NOTE:
   The `Active Alarm and Status Report` is output automatically following CIT log in. The report shown in Figure 1 is an example that shows several entries. There may be only one entry in the actual report.

   Note the information in the `Source Address` and `Description` columns for the top entry/entries above the first single- dashed line (for example, "`CRITICAL ... inc. OC1 LOS`" in the report below) in the `Active Alarm and Status Report.`

```
/*  Active Alarms and Status Report
=========================================================
Alarm       Source       Date      Time     Srv  Description
Level       Address          Detected
=========================================================
CRITICAL    main-2      MM-DD   HH:MM:SS    SA   inc. OC1 LOS
---------------------------------------------------------
MAJOR       m2-1-1-1    MM-DD   HH:MM:SS         inc. VT AIS


MAJOR       dcc-m2      MM-DD   HH:MM:SS         section DCC chan fail
MAJOR       dcc-m1      MM-DD   HH:MM:SS         section DCC chan fail
---------------------------------------------------------
MINOR       main-1      MM-DD   HH:MM:SS         inc. OC1 LOS
---------------------------------------------------------
ne-acty     -                                    holdover mode active
*/
```

Figure 1 – Example of Active Alarms and Status Report

3. **NOTE:**
   Local alarm or status conditions have a `Source Address` of the local slot, line, port, channel, path, cross-connection, or operations interface (DCC, X.25, etc.) where the event occurred. (See *Addresses* in the Commands and Reports section of this manual.) Use the **`rtrv-alm`** command to get another report, if necessary.

   Note the **local** trouble indication in the `Description` column of the `Active Alarm and Status Report`, starting with the highest alarm level (Critical) listed in the `Alarm Level` column.

4. Use **`opr-aco`** command to silence active audible office alarms, if required.

5. Find the trouble description in Table A for the highest alarm level and go to the indicated step or procedure.

Table A – Critical (CR) Alarm Conditions

Alarm Level or LED Indication	Trouble Description (Note)	Likely Causes	Step or Procedure

CRITICAL. **CR** LED lighted. **FAULT** LED flashing on **DS3** CP.	`inc. (from DSX) DS3 LOS*`
	`inc. (from DSX) DS3 OOF*`
	`inc. (from DSX) DS3 sig failed*`
	`inc. (from DSX) DS3 AIS*`
		Equipment failed or removed at DSX-3; DS3 input disconnected at DSX-3 or at DDM-2000 backplane; an out-of-frame DS3 signal incoming to the DSX-3 at far end; unprotected failure of **DS3** CP at far end or near end; DS3 signal looped at both ends.	Step 12

CRITICAL. **CR** LED lighted. **FAULT** LED flashing on **OLIU**(s).	`inc. OC1 LOS`
	`inc. OC1 LOF`
	`inc. OC1 sig failed (BER)`
	`inc. OC1 sig degrade (BER)`
	`inc. OC3 LOS`
	`inc. OC3 LOF`
	`inc. OC3 sig failed (BER)`
	`inc. OC3 sig degrade (BER)`
	`inc. OC12 LOS`
	`inc. OC12 LOF`
	`inc. OC12 sig failed (BER)`
	`inc. OC12 sig degrade (BER)`
		Failure of **OLIU** circuit pack at near or far end, or failure of receive fiber.	TAP-111

	`inc. STS1 LOP OC1` *`slotaid`* `inc. STS1 LOP OC3` *`slotaid`* `inc. STS1 LOP OC12` *`slotaid`*	If this condition occurs on the STS-1 on both OC-1, OC-3, or OC-12 lines, the likely cause is an unprotected failure of an **MXRVO** or an **OLIU** circuit pack at the far end. If this condition occurs on only one OC-1, OC-3, or OC-12 line, the likely cause is failure of the **OLIU** circuit pack at near or far end.	TAP-111

CRITICAL. **CR** LED lighted.	`inc. OC1 line AIS`
	`inc. OC3 line AIS*`
	`inc. OC12 line AIS*`
		Failure of **OLIU** circuit pack at the far end.	Step 10

	`inc. STS1 AIS*`	Incomplete or incorrect cross-connect provisioning in end-to-end network. In ring applications, unprotected removal or failure of **OLIU** circuit pack at far end or fiber failure.	TAP-118
	`inc. STS1 unequipped`	STS-1 cross-connects have been deleted in upstream equipment interfacing with the DDM-2000 OC-1, OC-3, or OC-12 ring.	Find the deleted cross-connects in the upstream equipment.

Table A – Critical (CR) Alarm Conditions (Continued)

Alarm Level or LED Indication	Trouble Description (Note)	Likely Causes	Step or Procedure
CRITICAL. **CR** LED lighted. **FAULT** LED may be lighted on failed circuit packs.	OLIU CP failed DS3 CP failed	Internal circuit pack failure.	DLP-523
CRITICAL. **CR** LED lighted.	inc. STS1 sig failed (BER) inc. STS1 sig degrade (BER)	Failure of near-end **OLIU** circuit pack reporting the STS-1 failure; failure of the far-end **OLIU** circuit pack; failure of the receive fiber if the OC-n is also reporting a failure.	TAP-111
	inc. VT AIS*	Incomplete or incorrect cross-connect provisioning in end-to-end network. In ring applications, unprotected removal or failure of **DS1**, **DS1PM**, or **T1EXT** circuit pack at far end; fiber or **OLIU** failure.	TAP-118
	CP removed	**OLIU** circuit packs removed without doing update (upd) command to remove circuit packs from equipment list.	Step 14
	CP not allowed - (crs)	Circuit pack does not support the manual cross-connection(s) currently provisioned for this slot.	Change cross-connections
	environment**n***	Default message, can be changed. An environmental alarm point (miscellaneous discrete input) is active.	Use **rtrv-attr-env** command at RT to determine cause.
	ExternalMinor*	External minor alarm (environmental alarm input 15) is active. DC power or cooling fan in RT cabinet has failed.	Clear trouble using local procedures.
CRITICAL. **CR** LED lighted.	illegal CP type	An illegal or unknown circuit pack type has been inserted into the shelf.	Remove circuit pack and install correct circuit pack.

Table A – Critical (CR) Alarm Conditions (Continued)

Alarm Level or LED Indication	Trouble Description (Note)	Likely Causes	Step or Procedure
`CRITICAL`. **CR** LED lighted. **FAULT** LED may be lighted on circuit pack.	`unexpected CP switches`	When associated with the **SYSCTL** slot, this message means that an invalid switch setting has been selected on the circuit pack or that some of the unused switches are not in the prescribed position. For **DS1**, **DS1PM**, or **T1EXT** slots, this message means that a change in a circuit pack switch setting was made.	Verify switch settings and change settings as required.
	`unexpected CP type`	When associated with a low speed slot, this message means that a different but supported circuit pack type (for example, **BBF3**) is inserted in a slot already provisioned.	Step 7

* May be provisioned for Critical, Major, Minor, or no alarm.
Note: Similar descriptions of trouble may also appear in the CIT Alarm and Status Report.

6. Is **FAULT** LED on an **OLIU** circuit pack lighted or flashing?

   If **YES**, do **TAP-111**.

   If **NO**, continue with **Step 7**.

7. ⇒ **NOTE:**
   Alarm may be caused by circuit packs inserted into the wrong slots.

   Are circuit packs installed in the correct slots?

   If **YES**, proceed to **Step 10**.

   If **NO**, continue with **Step 8**.

8. Remove circuit packs from wrong slots, check option switches (**DLP-513**), and reinstall circuit packs into the correct slots.

9. **STOP. YOU HAVE COMPLETED THIS PROCEDURE.**

10. Replace **OLIU**s at far end that are associated with the `Source Address` of the `inc. OC1 line AIS, inc. OC3 line AIS,` or `inc. OC12 line AIS` alarm message.

    Reference: **DLP-523**

11. **STOP. YOU HAVE COMPLETED THIS PROCEDURE.**

12. Issue a trouble report of a bad incoming DS3 signal from DSX-3 (STSX) cross-connect point. Clear trouble using local procedures. If no trouble found, replace **DS3** circuit pack at near end.

    Reference: **DLP-523**

13. **STOP. YOU HAVE COMPLETED THIS PROCEDURE.**

14. Determine the reason the circuit packs were removed. If the same circuit pack is to be reinserted and no switch settings are changed, reinstall the circuit pack. If the circuit pack was removed and switch settings changed, reinstall the circuit pack and momentarily depress the **UPD/INIT** button on the **SYSCTL**. If the circuit pack is not to be reinserted, momentarily depress the **UPD/INIT** button on the **SYSCTL** to remove the circuit pack from the inventory.

15. **STOP. YOU HAVE COMPLETED THIS PROCEDURE.**

Clear Major (MJ) Alarm

1. **NOTE:**
   Major alarms are failures that cause loss of service to 96 or less DS0 customer channels. Table A lists conditions which may cause a major alarm.

   Connect the CIT to the **CIT** connector on the near-end User Panel and log in or remote log in to the near-end system, if not already performed.

   Reference: **DLP-521**

2. **NOTE:**
   The **`rtrv-alm`** command can be used to display a report of active alarm and status conditions. The Commands and Reports section of this manual gives a description of the command.

   NOTE:
   The `Active Alarm` and `Status Report` is output automatically following CIT log in. The report shown in Figure 1 is an example that shows several entries. There may be only one entry in the actual report.

   Note the information in the `Source Address` and `Description` columns for the top entry/entries above the first single-dashed line in the `Active Alarm and Status Report` (Figure 1) (for example, "`MAJOR M1-1-1-1 MM-DD:MM:SS SA inc. VT AIS`").

```
/*  Active Alarms and Status Report
=====================================================
Alarm       Source       Date      Time     Srv  Description
Level       Address          Detected
=====================================================
MAJOR       m1-1-1-1    MM-DD   HH:MM:SS    SA   inc. VT AIS
-----------------------------------------------------
ne-acty     m2-1-1-1    MM-DD   HH:MM:SS    nsa  inc. VT AIS
*/
```

Figure 1 – Example of Active Alarms and Status Report

3. **NOTE:**
   Local alarm or status conditions have a Source Address of the local slot, line, port, channel, path, cross-connection, or operations interface (DCC, X.25, etc.) where the event occurred. (See *Addresses* in the Commands and Reports section of this manual.) Use the **`rtrv-alm`** command to get another report, if necessary.

   Note the **local** trouble indication in the `Description` column of the `Active Alarm and Status Report`, starting with the highest alarm level (Major) listed in the `Alarm Level` column.

4. Use **`opr-aco`** command to silence active audible office alarms, if required.

5. See Table A for trouble description for the highest alarm level and go to the indicated step or procedure.

Table A – Major (MJ) Alarm Conditions

Alarm Level or LED Indication	Trouble Description (Note)	Likely Causes	Step or Procedure
`MAJOR`. **MJ** LED lighted.	`AGNE communication failure`	The AGNE has not been assigned in an alarm group. The AGNE and NE(s) are assigned different alarm group numbers. The AGNE has failed (Unless there are 2 or 3 AGNEs).	Use **`rtrv-ne`** command to check AGNE assignment and alarm group number assignment. Use **`set-ne`** command to change AGNE assignment and alarm group assignment.
	`CP not allowed - (eqpt)`	A **DS1**, **DS1PM**, or **T1EXT** circuit pack is installed in a low speed slot and has a protection mismatch between a service slot and protection slot. Identifies a circuit pack upgrade that is not allowed.	Change service or protection circuit pack to eliminate mismatch. User will have to update the slot pair to "*auto*" before inserting the new circuit pack type.
	`ExternalMinor`*	External minor alarm (environmental alarm input 15) is active. DC power or cooling fan in RT cabinet has failed.	Clear trouble using local procedures.
	`environment`**`n`**`*`	An environmental alarm point (miscellaneous discrete input) is active.	Clear trouble using local procedures.

Table A – Major (MJ) Alarm Conditions (Continued)

Alarm Level or LED Indication	Trouble Description (Note)	Likely Causes	Step or Procedure
MAJOR. **MJ** LED lighted. **FAULT** LED lighted on circuit pack.	DS1 CP failed DS1PM CP failed T1EXT CP failed	Internal circuit pack failure.	Step 41
	SYSCTL CP failed	Internal circuit pack failure.	Step 29
MAJOR. **MJ** LED lighted.	CP removed	**DS1**, **DS1PM**, or **T1EXT** circuit packs removed without doing update (**upd**) command to remove circuit packs from equipment list.	Step 39
	unexpected CP type	When associated with a low speed slot, this message means that a different but supported circuit pack type (for example, **BBF3**) is inserted in a slot already provisioned for different circuit pack.	Step 47
	unexpected CP switches	When associated with the **SYSCTL** slot, this message means that an invalid switch setting has been selected on the circuit pack or that some of the unused switches are not in the prescribed position. For **DS1**, **DS1PM**, or **T1EXT** slots, this message means that a change in a circuit pack switch setting was made.	Step 50
	inc. DS1 sync. ref. LOS inc. DS1 sync. ref. LOF inc. DS1 sync. ref. BER inc. DS1 sync. ref. AIS inc. DS1 sync. ref. OOL inc. DS1 sync. ref. EOOF	Failure of **TGS/TG3** CP at far end, or failure of upstream timing supply, or timing eqpt.	Step 56

Table A – Major (MJ) Alarm Conditions (Continued)

Alarm Level or LED Indication	Trouble Description (Note)	Likely Causes	Step or Procedure
MAJOR. **MJ** LED lighted. **FAULT** LED flashing on **DS1**, **DS1PM**, or **T1EXT** CP.	`inc. (from DSX) DS1 LOS` `inc. (from DSX) DS1 sig fail`†	Hard failure of upstream equipment or facility (towards the DSX-1 or T1 interface). The DS1 or T1 input is disconnected at the backplane or the DSX-1 or T1 interface; equipment is failed or removed at the DSX-1 or T1 interface. Mismatch of the line code (AMI/B8ZS); cross talk in office wiring; failure of **DS1**, **DS1PM**, or **T1EXT** circuit pack.	Step 9

MAJOR. **MJ** LED lighted. **FAULT** LED flashing on **DS3** CP.	`inc. (from DSX) DS3 AIS*`
	`inc. (from DSX) DS3 LOS*`
	`inc. (from DSX) DS3 OOF*`
	`inc. (from DSX) DS3 sig failed*`
		Equipment failed or removed at DSX-3; DS3 input disconnected at DSX-3 or at DDM-2000 backplane; an out-of-frame DS3 signal incoming to the DSX-3 at far end; unprotected failure of **DS3** CP at far end or near end; DS3 signal looped at both ends.	Step 11

MAJOR. **MJ** LED lighted.	`illegal CP type`	An illegal or unknown circuit pack type has been inserted into the shelf.	Remove circuit pack and install correct circuit pack.
	`inc. STS1 AIS*`	Incomplete or incorrect cross-connect provisioning in end-to-end network. In ring applications, unprotected removal or failure of **OLIU** circuit pack at far end or fiber failure.	TAP-118
	`inc. OC3 line AIS*` `inc. OC12 line AIS*`	Failure of **OLIU** circuit pack at the far end.	Step 54
	`inc. VT AIS*`	Incomplete or incorrect cross-connect provisioning in end-to-end network. In ring applications, unprotected removal or failure of **DS1**, **DS1PM**, or **T1EXT** circuit pack at far end; fiber or **OLIU** failure.	TAP-118

Table A – Major (MJ) Alarm Conditions (Continued)

Alarm Level or LED Indication	Trouble Description (Note)	Likely Causes	Step or Procedure
MAJOR. **MJ** LED lighted.	inc. VT LOP	Unprotected failure of **DS1**, **DS1PM**, or **T1EXT** circuit pack at near end or far end; unprotected failure of **MXRVO** circuit pack at far end; unprotected failure of OC-1, OC-3, or OC-12 **OLIU** circuit pack at near end or far end; unprotected failure of both OC-1, OC-3, or OC-12 **OLIU** circuit packs at far end.	Replace failed circuit pack [DLP-523]
	inc. VT sig degrade (BER)	An OLIU circuit pack failure or a fiber failure at some point on the failed ring.	TAP-111
	inc. VT unequipped	VT1.5 cross-connects have been deleted in upstream equipment interfacing with the DDM-2000 OC-1, OC-3, or OC-12 ring.	Find the deleted cross-connects in the upstream equipment.

Table A – Major (MJ) Alarm Conditions (Continued)

Alarm Level or LED Indication	Trouble Description (Note)	Likely Causes	Step or Procedure
MAJOR. **MJ** LED lighted.	excessive holdover	The system was manually switched to holdover mode (with the **switch-sync** command) and the switch has not been reset. The system automatically switched to holdover mode due to failure of the timing references as follows: a. The reference failures have not cleared. b. The system is provisioned for nonrevertive synchronization mode switching. c. The system is provisioned for loop-timed operation and the optical line of **OLIU** circuit pack has failed or a message indicating an upstream clock problem has been received on the sync message bits of the optical line. (See the **rtrv-sync** command). d. The system is provisioned for sync message signaling, but the upstream system from which it line times has not been provisioned for sync message signaling. The condition can be cleared by provisioning both systems the same. (See the **set-sync** and **rtrv-sync** commands).	The condition can be cleared by repairing at least one of the timing references (if both have failed) and resetting synchronization mode protection switch with the **switch-sync:s=mode, pri=reset** command. In a central office system.
MAJOR. **MJ** LED lighted. Flashing **FAULT** LED on **SYSCTL**.	section DCC channel failed	**SYSCTL** or **OHCTL** failure, reset, or initialization at far end. Program installation in progress or failed at far end. **SYSCTL** or **OLIU** failed at near end. **OLIU** or fiber failure between this node and node connected to the source address (no communication with other end).	Step 13

Table A – Major (MJ) Alarm Conditions (Continued)

Alarm Level or LED Indication	Trouble Description (Note)	Likely Causes	Step or Procedure
MAJOR. **MJ** LED lighted.	inconsistent DCC values	The Network Side/User Side parameters are set the same at both ends of a DCC (optical span).	Use **rtrv-fecom** command to check Network Side/User Side parameters at each shelf in the network. Use **set-fecom** command to change Network Side/User Side parameters at one end of optical span.
	frequency error	The alarm condition indicates that the frequency of an incoming OC-1, OC-3, or OC-12 signal deviates by greater than 3 ppm from the local system clock.	Check the external timing source or the timing obtained from a remote shelf.
	LS prot assembly removed	The system has been reset with no low speed protection assembly installed. This is not a valid system configuration.	Install a low speed protection assembly and execute the reset function.
	LS prot mode not chgd-(crs)	An attempt to change the low speed protection mode has failed because all cross connections terminating on low speed ports were not removed.	Remove all such cross connections and execute the reset function.
	X.25 communication failure	X.25 communication eqpt. failed; failure at the O.S.	Issue trouble report to O.S.

* May be provisioned for Critical, Major, Minor, or no alarm.
† May be provisioned for Major, Minor, or no alarm.
Note: Similar descriptions of trouble may also appear in the CIT Alarm and Status Report.

6. **NOTE:**
   If a program installation is being performed to a **SYSCTL** at the far end, it is normal for the **FAULT** LED on the near-end **SYSCTL** to flash and the **MJ** and **NE ACTY** LEDs to light on the User Panel. If there is a **MJ** alarm at the end receiving the program, trouble is indicated. You should check if a program installation is being done.

   Was new software generic being downloaded (program upgrade) to the **SYSCTL** at this end when alarm occurred?

   If **YES**, do **TAP-116**.

   If **NO**, continue with **Step 7**.

7. Is the **FAULT** LED on the faceplate of one or more circuit packs flashing?

   If **YES**, continue with **Step 8**.

   If **NO**, proceed to **Step 29**.

8. Find the circuit pack(s) with a flashing LED in Table B below and go to the indicated step or procedure.

Table B – Circuit Pack(s) With Flashing LED

Circuit Pack	Go To
DS1/DS1PM/T1EXT	Step 9
DS3	Step 11
SYSCTL	Step 21
OLIU (Rings)	TAP-111

9. Switch service to protection. If LED is flashing on protection **DS1**, **DS1PM**, or **T1EXT** circuit pack, issue trouble report of bad incoming signal at input to **DS1**, **DS1PM**, or **T1EXT** circuit pack with flashing LED(s). If LED is not flashing on protection **DS1**, **DS1PM**, or **T1EXT** circuit pack, replace service **DS1**, **DS1PM**, or **T1EXT** circuit pack [**DLP-523**].

10. **STOP. YOU HAVE COMPLETED THIS PROCEDURE.**

11. Switch service to protection. If LED is flashing on protection **DS3** circuit pack, issue trouble report of bad incoming signal at input to **DS3** circuit pack with flashing LED(s). If LED is not flashing on protection **DS3** circuit pack, replace service **DS3** circuit pack [**DLP-523**].

12. **STOP. YOU HAVE COMPLETED THIS PROCEDURE.**

13. **NOTE:**
If a program installation is being performed to a **SYSCTL** at the far end, it is normal for the **FAULT** LED on the near-end **SYSCTL** to flash and the **MJ** and **NE ACTY** LEDs to light on the User Panel. If there is a **MJ** alarm at the end receiving the program, trouble is indicated. You should check if a program installation is being done.

    Is new software generic being downloaded (program upgrade) to the **SYSCTL** at the far end terminal?

    If **YES**, **STOP. YOU HAVE COMPLETED THIS PROCEDURE**.

    If **NO**, continue with **Step 14**.

14. In alarm report, is there any indication of **OLIU** or fiber trouble at near end or far end such as `inc. OC1 FERF, inc. OC3 FERF, or inc. OC12 FERF` alarm message?

    If **YES**, continue with **Step 15**.

    If **NO**, proceed to **Step 17**.

15. **NOTE:**
If there is a DCC failure, a remote login to the shelf connected through the `Source Address` cannot be done. The **`rtrv-alm`** and **`rtrv-map-network`** or **`rtrv-map-neighbor`** command can be used to check for `dcc failure` for **MAIN**. Also, use **`rtrv-fecom`** command to see if "fecom" has been disabled.

    Note `Source Address` of DCC channel failure. Check optical fibers connected through the `Source Address` per local procedures. If no trouble found, replace near-end **OLIU** first then far-end **OLIU**.

    Reference: **DLP-523**

16. **STOP. YOU HAVE COMPLETED THIS PROCEDURE.**

17. Use CIT and **`reset`** command to reset **SYSCTL** at the near end or unplug and reseat the **SYSCTL**.

18. Is the **FAULT** LED on the **SYSCTL** circuit pack still flashing (`section DCC channel failed`)?

    If **YES**, continue with **Step 19**.

    If **NO**, **STOP**. **YOU HAVE COMPLETED THIS PROCEDURE.**

19. If possible, use CIT and **`rlgn`** command to log in to the far-end terminal (**DLP-522**) and use the **`reset`** command to reset **SYSCTL** at the far end.

20. Is the **FAULT** LED on the **SYSCTL** circuit pack still flashing (`section DCC channel failed`)?

    If **YES**, proceed to **Step 25**.

    If **NO**, **STOP. YOU HAVE COMPLETED THIS PROCEDURE.**

21. **NOTE:**
    Unseating and reseating the **SYSCTL** performs a *reset* procedure which restarts the software program.

    Unseat and reseat **SYSCTL** circuit pack. Do not depress **UPD/INIT** button.

22. Is the **FAULT** LED on the affected circuit pack still flashing?

    If **YES**, continue with **Step 23.**

    If **NO**, **STOP. YOU HAVE COMPLETED THIS PROCEDURE.**

23. Obtain a CIT and repeat this procedure.

24. **STOP. YOU HAVE COMPLETED THIS PROCEDURE.**

25. Refer to **DLP-501** and replace **SYSCTL** at near-end terminal.

26. Is the **FAULT** LED on the **SYSCTL** circuit pack still flashing?

    If **YES**, continue with **Step 27**.

    If **NO**, **STOP. YOU HAVE COMPLETED THIS PROCEDURE.**

27. At far-end terminal, reset **SYSCTL** by unseating and reseating **SYSCTL** or by using a CIT and the **`reset`** command, if not already performed. If **FAULT** LED is still flashing after a reset, refer to **DLP-501** and replace **SYSCTL** at far-end terminal.

28. **STOP. YOU HAVE COMPLETED THIS PROCEDURE.**

29. Is the **FAULT** LED lighted on the **SYSCTL**?

    If **YES**, continue with **Step 30**.

    If **NO**, proceed to **Step 37**.

30. Use CIT and **`rtrv-ne`** command to check provisioning of TID. Two or more shelves cannot have the same TID.

31. Is provisioning correct?

    If **YES**, proceed to **Step 33**.

    If **NO**, continue with **Step 32**.

32. Change provisioning using the **`set-ne`** command.

33. Is the **FAULT** LED still lighted?

    If **YES**, continue with **Step 34**.

    If **NO**, proceed to **Step 36**.

34. Refer to **DLP-501** and replace the **SYSCTL**.

35. Is the **FAULT** LED still lighted on the **SYSCTL**?

    If **YES**, proceed to **Step 37**.

    If **NO**, continue with **Step 36**.

36. Is the **MJ** alarm LED still lighted?

    If **YES**, continue with **Step 37**.

    If **NO**, **STOP. YOU HAVE COMPLETED THIS PROCEDURE.**

37. The problem appears to be in the backplane of the DDM-2000 FiberReach or another circuit pack in the shelf is causing the **FAULT** LED on the **SYSCTL** to light. Remove service from shelf and unseat all circuit packs except **SYSCTL**. If the trouble clears, it means that one or more of the circuit packs removed is defective. If the trouble cannot be isolated by removing circuit packs, seek technical assistance and/or replace the shelf. Notify your supervisor, your local technical support organization, or call Lucent Technologies RTAC, per local operating instructions.

38. **STOP. YOU HAVE COMPLETED THIS PROCEDURE.**

39. Determine the reason the circuit packs were removed. If the same circuit pack(s) is to be reinserted and no switch settings are changed, reinstall the circuit pack. If the circuit pack was removed and switch settings changed, reinstall the circuit pack and momentarily depress the **UPD/INIT** button on the **SYSCTL**. If the circuit pack is not to be reinserted, momentarily depress the **UPD/INIT** button on the **SYSCTL** to remove the circuit pack from the inventory.

40. **STOP. YOU HAVE COMPLETED THIS PROCEDURE**.

41. **NOTE:**
    A major alarm may also be caused by a DS1 line code switch setting that is different from what they were before a **DS1**, **DS1PM**, or **T1EXT** circuit pack was replaced, excessive holdover due to loss of synchronization reference, or a manual switch to holdover in effect too long.

    Is **FAULT** LED lighted on any **DS1**, **DS1PM**, or **T1EXT** circuit pack?

    If **YES**, continue with **Step 42**.

    If **NO**, proceed to **Step 46**.

42. Check switch settings on **DS1**, **DS1PM**, or **T1EXT** circuit pack (with lighted **FAULT** LED) for correct line code settings. If circuit pack has been replaced, check if settings are the same as they were before the circuit pack was replaced.

    Reference: **DLP-513**

43. Are switch settings correct?

    If **YES**, do **TAP-103**.

    If **NO**, continue with **Step 44**.

44. Change switch settings to the correct settings. If switch settings are to be changed from what they were previously, update the equipment list by momentarily depressing the **UPD/INIT** button on the **SYSCTL** after the circuit pack is reinstalled.

45. **STOP. YOU HAVE COMPLETED THIS PROCEDURE.**

46. Is there an `inc. VT AIS` alarm indication?

    If **YES**, do **TAP-118**.

    If **NO**, do **TAP-103**.

47. **NOTE:**
Alarm may be caused by circuit packs inserted into the wrong slots.

Are circuit packs installed in the correct slots?

If **YES**, proceed to **Step 50**.

If **NO**, continue with **Step 48**.

48. Remove circuit packs from wrong slots, check option switches (**DLP-513**) and reinstall circuit packs into the correct slots.

49. **STOP. YOU HAVE COMPLETED THIS PROCEDURE.**

50. **CAUTION:**
When removing circuit packs ensure that protection switching is available. Also, remove the circuit pack without the lighted **ACTIVE** *LED first.*

Check switch settings on the circuit packs for correct settings. If the circuit pack has been replaced, check if settings are the same as they were before the circuit pack was replaced. Also check if the switches are set the same as the companion circuit pack.

Reference: **DLP-513**

51. Are switch settings correct?

If **YES**, do **TAP-103**.

If **NO**, continue with **Step 52**.

52. Change switch settings to the correct settings. (Use **`switch-( )`** command to switch to other circuit pack before removing pack.) If switch settings are to be changed from what they were previously, update the equipment list by momentarily depressing the **UPD/INIT** button on the **SYSCTL** after the circuit pack is reinstalled.

53. **STOP. YOU HAVE COMPLETED THIS PROCEDURE.**

54. Replace **OLIU**s at far end that are associated with the Source Address of the `inc. OC3 line AIS` or `inc. OC12 line AIS` alarm message.

Reference: **DLP-523**

55. **STOP. YOU HAVE COMPLETED THIS PROCEDURE.**

56. Check far-end **TGS/TG3** option switches for proper line coding and frame format settings (**`rtrv-sync`**). If no trouble found, check incoming timing reference signals. If timing reference signals are bad, issue trouble report of bad incoming timing reference signal(s). If no trouble found with timing references, replace far-end **TGS/TG3** circuit packs.

57. **STOP. YOU HAVE COMPLETED THIS PROCEDURE**.

Clear Multiple Failure

1. **CAUTION:**
   Although the **FAULT** *LEDs may be lighted or flashing on an* **OLIU***, service may be interrupted if the* **OLIU** *is removed. The* **OLIUs** *may be in unidirectional switching mode and transmitting on one* **OLIU** *while receiving on the other. The state of the switch mode must be analyzed before removing an* **OLIU***.*

   NOTE:
   A multiple failure condition exists when a service circuit pack and its associated protection circuit pack have failed, when two service DS1 circuit packs in the same group have failed, or when the switch mode is inhibited or locked and a failure occurs on a service circuit pack.

   Is the **FAULT** LED on an **OLIU** lighted (`CP failed`) or flashing (`inc. OC1 LOS, inc. OC3 LOS,` or `inc. OC12 LOS`, etc.)?

   If **YES**, do **TAP-111**.

   If **NO**, continue with **Step 2**.

2. Are the **FAULT** LEDs on both a service and protection circuit pack of the same type lighted (not flashing) (`CP failed`)?

   If **YES**, continue with **Step 3**.

   If **NO**, proceed to **Step 7**.

3. **CAUTION:**
   Replacement circuit pack may have option switches which must be properly set before the circuit pack is installed.

   Replace the service circuit pack with the lighted **FAULT** LED.

   Reference: **DLP-523**

4. Is the **FAULT** LED on the circuit pack just replaced off?

   If **YES**, continue with **Step 5**.

   If **NO**, do **TAP-106**.

5. Replace the protection circuit pack with the lighted **FAULT** LED.

   Reference: **DLP-523**

6. Is the **FAULT** LED on the circuit pack just replaced off?

   If **YES**, **STOP. YOU HAVE COMPLETED THIS PROCEDURE.**

   If **NO**, do **TAP-106**.

7. Are the **FAULT** LEDs on two or more service **DS1**, **DS1PM**, **T1EXT**, **HDSL**, or **DS3** circuit packs lighted (not flashing)?

   If **YES**, continue with **Step 8**.

   If **NO**, proceed to **Step 12**.

8. Replace either of the service **DS1**, **DS1PM**, **T1EXT**, **HDSL**, or **DS3** circuit packs with the lighted **FAULT** LED.

   Reference: **DLP-523**

9. Is the **FAULT** LED on the circuit pack just replaced off?

   If **YES**, continue with **Step 10**.

   If **NO**, do **TAP-106**.

10. Replace the other service **DS1**, **DS1PM**, **T1EXT**, **HDSL**, or **DS3** circuit pack with the lighted **FAULT** LED.

    Reference: **DLP-523**

11. Is the **FAULT** LED on the circuit pack just replaced off?

    If **YES**, **STOP. YOU HAVE COMPLETED THIS PROCEDURE.**

    If **NO**, do **TAP-106**.

12. Use CIT and the **`rtrv-( )`** commands (**`rtrv-state-eqpt`**, **`rtrv-sync`**, etc.) to check switching mode for inhibits, locks, etc.

13. Was any trouble found?

    If **YES**, continue with **Step 14**.

    If **NO**, do **TAP-108**.

14. Determine reason for locks, inhibits, etc. to be in place. See the "Commands and Reports" section of this manual for a description of the **`switch-( )`** commands and the **`rtrv-alm`** command report descriptions. Use the **`switch-( )`** commands to reset switching mode or priority.

    If you need assistance, notify your supervisor, your local technical support organization, or call Lucent Technologies RTAC, per local operating instructions.

15. **STOP. YOU HAVE COMPLETED THIS PROCEDURE.**

Clear Power Minor (PMN) Alarm

1. ⚠ **CAUTION:**
   There is an AC power failure at the remote DDM-2000 FiberReach terminal. This will result in a service interruption if it is not restored.

   Are you at the remote terminal site?

   If **YES**, proceed to **Step 5**.

   If **NO**, continue with **Step 2**.

2. Momentarily depress the **ACO** pushbutton on the DDM-2000 FiberReach User Panel.

   Response: The audible alarm is silenced.

3. Issue a trouble report of an AC power failure at the remote terminal.

4. **STOP. YOU HAVE COMPLETED THIS PROCEDURE.**

5. What type of RT configuration do you have?

   If **Bulk Power**, continue with **Step 6**.

   If **Distributed Power**, proceed to **Step 8**.

6. Use documentation for your bulk power plant to clear trouble. Check AC circuit breakers and verify AC power is present at the RT enclosure.

7. **STOP. YOU HAVE COMPLETED THIS PROCEDURE.**

8. Using digital multimeter (DMM), measure incoming AC voltage (Use **AC** and **GND** jacks on **LDU** faceplate in J1C182BA power shelf).

9. Is measured AC voltage between 105 and 129 volts?

   If **YES**, continue with **Step 10**.

   If **NO**, proceed to **Step 19**.

10. Is power shelf a J1C182BA Power Shelf?

    If **YES**, continue with **Step 11**.

    If **NO**, proceed to **Step 27**.

11. Is **FAIL** LED lighted on any **336A RECTIFIERs** at RT?

    If **YES**, continue with **Step 12**.

    If **NO**, proceed to **Step 14**.

12. Replace **336A RECTIFIERs** that have **FAIL** LED lighted.

13. Did alarm clear within 20 seconds?

    If **YES**, **STOP. YOU HAVE COMPLETED THIS PROCEDURE**.

    If **NO**, proceed to **Step 27**.

14. Is **BAT DISCHG** LED lighted on any **337A BATTERY CHARGER**(s)?

    If **YES**, continue with **Step 15.**

    If **NO**, proceed to **Step 27.**

15. Replace one **336A RECTIFIER.**

16. Did alarm clear within 20 seconds?

    If **YES**, **STOP. YOU HAVE COMPLETED THIS PROCEDURE**.

    If **NO**, continue with **Step 17**.

17. Replace another **336A RECTIFIER.**

18. Did alarm clear within 20 seconds?

    If **YES**, **STOP. YOU HAVE COMPLETED THIS PROCEDURE.**

    If **NO**, proceed to **Step 27**.

19. Is fuse blown or circuit breaker tripped at RT main AC circuit breaker box?

    If **YES**, continue with **Step 20**.

    If **NO**, proceed to **Step 23**.

20. Replace blown fuse or reset circuit breaker.

21. Does fuse blow or circuit breaker trip again?

    If **YES**, proceed to **Step 27**.

    If **NO**, continue with **Step 22**.

22. Did alarm clear within 20 seconds?

    If **YES**, **STOP. YOU HAVE COMPLETED THIS PROCEDURE**.

    If **NO**, proceed to **Step 27**.

23. Contact local power company if loss of AC power has occurred or if there is overvoltage or undervoltage condition.

24. Does local power company verify abnormal power condition?

    If **YES**, continue with **Step 25**.

    If **NO**, proceed to **Step 27**.

25. Estimate restoration time for AC power. If necessary, equip RT with fully charged batteries or other power source to maintain power until AC power is restored.

26. **STOP. YOU HAVE COMPLETED THIS PROCEDURE**.

27. **NOTE:**
    If alarms remain, multiple troubles exist and trouble analysis must be repeated.

    If you have a J1C182BA Power Shelf, use SD-7C117 and SD- 7C118 to locate trouble. If another power shelf or powering arrangement is used, use the appropriate documentation and wiring diagrams to locate power trouble. If you need technical assistance, notify your supervisor, your local technical support organization, or call Lucent Technologies RTAC, per local operating instructions.

28. **STOP. YOU HAVE COMPLETED THIS PROCEDURE**.

Clear Trouble Report

1. Is the **CR** alarm LED lighted on the User Panel?

   If **YES**, do **TAP-101**.

   If **NO**, continue with **Step 2**.

2. Is the **MJ** alarm LED lighted on the User Panel?

   If **YES**, do **TAP-102**.

   If **NO**, continue with **Step 3**.

3. Is the **MN** alarm LED lighted on the User Panel?

   If **YES**, do **TAP-112.**

   If **NO**, continue with **Step 4**.

4. Is the **FAULT** LED on the faceplate of a **DS1**, **DS1PM**, **T1EXT**, **HDSL**, or **DS3** circuit pack flashing [`inc. DS1 LOS` or `inc. DS3 LOS`]?

   If **YES**, continue with **Step 5**.

   If **NO**, proceed to **Step 7**.

5. There appears to be an incoming DS1/DS3 signal failure. Refer to **TAP-110** and clear the condition.

6. **STOP. YOU HAVE COMPLETED THIS PROCEDURE.**

7. Is the **FAULT** LED on the faceplate of any circuit pack in the FiberReach lighted (not flashing) [`( ) CP failed`]?

   If **YES**, continue with **Step 8**.

   If **NO**, proceed to **Step 10**.

8. **NOTE:**
   There is an inconsistent combination of alarms and diagnostic indications.

   Refer to **TAP-108** and determine the true status of the system.

9. **STOP. YOU HAVE COMPLETED THIS PROCEDURE.**

10. Perform an LED test by depressing the **ACO/TST** pushbutton or using the **`test-led`** command.

    Reference: **DLP-509**

11. Did all the circuit packs pass the LED test?

    If **YES**, continue with **Step 12**.

    If **NO**, proceed to **Step 14**.

12. **NOTE:**
    The DDM-2000 FiberReach appears to be operating correctly with no failures present.

    Return a report of **NO TROUBLE FOUND**.

13. **STOP. YOU HAVE COMPLETED THIS PROCEDURE.**

14. Replace the circuit pack that failed the LED test.

    Reference: **DLP-523**

15. Repeat the LED test.

16. Did all the circuit packs pass the LED test?

    If **YES**, **STOP. YOU HAVE COMPLETED THIS PROCEDURE.**

    If **NO**, continue with **Step 17**.

17. **NOTE:**
    The failure is not in the circuit pack just replaced.

    Refer to **TAP-106** to isolate and clear the failure.

18. **STOP. YOU HAVE COMPLETED THIS PROCEDURE**.

Isolate and Clear Failure

1. **NOTE:**
   It is assumed that the **FAULT** LED on a circuit pack is lighted and replacing the circuit pack does not clear the problem.

   Is the circuit pack with the lighted LED a **DS1**, **DS1PM**, **T1EXT**, **HDSL**, **DS3**, or **OLIU**?

   If **YES**, continue with **Step 2**.

   If **NO**, proceed to **Step 3**.

2. Unseat and reseat the standby (without lighted **ACTIVE** LED) in the same group as the affected circuit pack with the lighted LED.

3. Is a CIT available?

   If **YES**, continue with **Step 4**.

   If **NO**, proceed to **Step 6**.

4. Use the CIT and reset command to reset **SYSCTL**.

5. Is the **FAULT** LED on the affected circuit pack still lighted?

   If **YES**, proceed to **Step 8**.

   If **NO**, **STOP. YOU HAVE COMPLETED THIS PROCEDURE**.

6. **NOTE:**
   Unseating and reseating the **SYSCTL** performs a reset procedure which restarts the software program.

   Unseat and reseat **SYSCTL** circuit pack. Do not depress **UPD/INIT** button.

7. Is the **FAULT** LED on the affected circuit pack still lighted?

   If **YES**, continue with **Step 8**.

   If **NO**, **STOP. YOU HAVE COMPLETED THIS PROCEDURE**.

8. **CAUTION:**
   Replacing the **SYSCTL** *involves updating the internal memory on the circuit pack.*

   Refer to **DLP-501** and replace the **SYSCTL**.

9. Is the **FAULT** LED on the affected circuit pack still lighted?

   If **YES**, continue with **Step 10**.

   If **NO**, **STOP. YOU HAVE COMPLETED THIS PROCEDURE**.

10. **NOTE:**
    The problem appears to be in the backplane wiring of the FiberReach. One way to verify this is to swap the **SYSCTL** and any circuit pack with an inconsistent diagnostic indication with the corresponding circuit packs in another FiberReach. If the problem moves with the circuit packs, it means that one or more of the circuit packs is defective. If the problem stays with the original FiberReach the entire assembly, but not the circuit packs, should be replaced. The FiberReach has a printed backplane and cannot be repaired in the field.

    Check for bent or broken pins, shorted pins, etc. If you need technical assistance, notify your supervisor, your local technical support organization, or call Lucent Technologies RTAC, per local operating instructions.

11. **STOP. YOU HAVE COMPLETED THIS PROCEDURE**.

Clear Far End Alarm Using Craft Interface Terminal (CIT)

1. **NOTE:**
   The Remote NE Status feature is valid starting with FIberReach Release 4 and must be enabled using the **`rnestat`** parameter of the **`set-ne:`** command.

   NOTE:
   It is assumed that a CIT is available and that there is a failure at a far end node (as indicated by an **FE ACTY** LED on the local system or by the `Source Address` of `farend` in the local `Active Alarms and Status Report`).

   Connect the CIT to the connector on the User Panel or remote login to the near-end system, if not already performed.

   Reference: **DLP-521**

2. **NOTE:**
   The `Active Alarms and Status Report` is output automatically following CIT log in. The report shown in Figure 1 is an example that shows several entries. There may be only one entry in the actual report.

   Note the information in the `Source Address` and `Description` columns for the top entry/entries above the first single-dashed line in the `Active Alarms and Status Report` (Figure 1) (for example,
   `MINOR farend MM-DD HH:MM:SS - SiteXNE1`)

```
/* Active Alarms and Status Report
==============================================================
 Alarm       Source    Date   Time      Srv   Description
 Level       Address     Detected
==============================================================
 MINOR       farend    MM-DD HH:MM:SS   -     SiteXNE1
 MINOR       farend    MM-DD HH:MM:SS   -     SiteYNE1
--------------------------------------------------------------
 ne-acty     m1-1-1-1  MM-DD HH:MM:SS         inc. VT AIS
*/
```

Figure 1 – Example of Active Alarms and Status Report

3. **NOTE:**
   Far-end alarm or status conditions are listed in this report with a `Source Address` of `farend`. Local alarm or status conditions have a `Source Address` of the local slot, line, port, channel, path, cross-connection, or operations interface (DCC, TL1 (X.25), etc.) where the event occurred. (See *Addresses* in the Commands and Reports section of this manual.) Use the **`rtrv-alm:`** command to get another report, if necessary.

   Does the `Source Address` of any top entry above the first single-dashed line in the alarm report indicate a **local** alarm?

   If **YES**, continue with **Step 4**.
   If **NO**, proceed to **Step 6**.

4. Find the `Alarm Level` for the local alarm in Table A and go to the indicated procedure.

Table A – Trouble Conditions

Alarm Level	TAP
CRITICAL	TAP-101
MAJOR	TAP-102
MINOR	TAP-112
ne-acty	TAP-117
PWR MINOR (PMN)	TAP-104
abnormal (ABN)	TAP-109

5. **STOP. YOU HAVE COMPLETED THIS PROCEDURE.**

6. Use the **`rtrv-nmap`**/**`rtrv-map-network`** command to get a network map report.

7. **NOTE:**
   The TID of the far-end system is the TID listed in the `Description` column of the near-end `Active Alarm and Status Report` obtained using the **`rtrv-alm:`** command.

   NOTE:
   In a path protection switched ring network, FAILED Communication Status most likely indicates a total node failure (power failure, failure of both **OLIU**s or both fiber pairs). In a linear configuration, it most likely indicates a failure of both service and protection paths between the last shelf without communication failure and the first shelf with a communication failure.

NOTE:
If any systems have a Communications Status of `FAILED`, you may have to log in to the system nearest to the system with a `FAILED` communications status or issue a trouble report on the system you cannot log into.

NOTE:
The far-end alarms refer to alarms in the same alarm group as the local network element. For systems you cannot log into (FT-2000), issue a trouble report on the system indicated in the `Active Alarms and Status Report`.

If possible, enter the **`rlgn:`**`tid` command to log in to any far-end system indicated in the top entry in the `Active Alarms and Status Report` (for example,
`MINOR farend MM-DD HH:MM:SS - SiteXNE1`)

Reference: **DLP-522**

8. Use the **`rtrv-alm:`** command at the far-end DDM-2000 system to get a report of status and alarms. See Table B for a detailed description of the messages in the `Active Alarms and Status Report`. For systems other than DDM-2000 OC-3, FT-2000 OC-48, DDM-2000 FiberReach, DDM-2000 OC-12, and *SLC*®-2000, etc., use the User/Service Manual for that system for trouble clearing procedures.

9. Repeat this procedure from **Step 3** for the DDM-2000 OC-3 shelf you are now logged into. Remember that when the procedures refer to local it is now the shelf from which you are getting the `Active Alarms and Status Report`.

Table B – RTRV-ALM Message Descriptions

Description	Alarm Level	Meaning
`–48V power/fuse FA|FB failed`	MN	A –48 volt power feeder or a fuse on the user panel has failed. (**FA** or **FB** LED identifies failure.)
`AC power failed`	PMN	The AC power supply to a remote terminal cabinet has failed.
`ACO active`	Status	The parallel telemetry outputs and audible office alarms normally active due to the alarm conditions in the system are being suppressed. (See the **`opr-aco`** command.)
`AGNE communication failure`	MJ	A remote network element (NE) cannot establish and NE status association with an alarm gateway network element (AGNE). The alarm is also declared by an AGNE that can not establish an NE status association with one or more NEs in its alarm group. **Likely cause:** The AGNE has not been assigned in an alarm group. The AGNE and NEs are assigned different alarm group numbers.
`APS - automatic lock`	MN	The service associated with a **DS1**, **DS1PM**, or **T1EXT** circuit pack has been automatically switched and locked onto the protection **DS1**, **DS1PM**, or **T1EXT** circuit pack. The automatic protection switching (APS) lock will remain active until midnight. **Likely cause:** Four automatic switches of a single **DS1**, **DS1PM**, or **T1EXT** circuit pack in 10 minutes, probably because of an intermittent failure of the **DS1**, **DS1PM**, or **T1EXT** circuit pack.
`APS channel failed`	MN	The SONET Automatic Protection Switching (APS) channel on the protection OC-3 line has failed. **Likely cause:** Failure of the **OLIU** circuit pack on the protection line (**MAIN-2(P)** at the far end or failure of the **OLIU** circuit pack on the protection line (**MAIN-2(P)**) at the near end.
`auto turnup test IP`	ABN	An automatic turnup test is in progress.

Table B – RTRV-ALM Message Descriptions (Continued)

Description	Alarm Level	Meaning
`control`**n**	Status	The specified environmental control point (miscellaneous discrete output) is active. **Note:** The actual message that appears in the `Active Alarms and Status Report` for this condition can be provisioned; this is the default message. (See the **`rtrv-attr-cont:`** and **`set-attr-cont:`** commands.) **Likely cause:** The system was instructed to close the environmental control point by the closing of the corresponding environmental control input at the far end.
`CP not allowed - (crs)`	CR or MN	The circuit pack does not support the manual cross-connection(s) currently provisioned for this slot. The user should change the circuit pack type or change the cross-connection(s) to the slot.
`CP not allowed - (eqpt)`	MJ or MN	A **DS1**, **DS1PM**, or **T1EXT** circuit pack is installed in a low-speed slot and has caused a protection mismatch between a service slot and a protection slot. Change service or protection circuit pack to eliminate mismatch. Identifies a circuit pack upgrade that is not allowed. User will have to update the slot pair to "auto" before inserting the new circuit pack type.
`CP removed`	CR, MJ or MN	A circuit pack previously installed in this system is removed. The circuit pack should be replaced, or an update (**`upd`**) command should be done to remove it from the system equipment list.
`dormant/executing code mismatch`	Status	This alarm condition is raised when the network element (NE) detects that dormant software exists on the NE with a release number that does not match the release number of the executing software.
`DS1 CP failed`	MJ or MN	Internal equipment failure of the specified **DS1** circuit pack.
`DS1PM CP failed`	MJ or MN	Internal equipment failure of the specified **DS1PM** circuit pack.
`DS1 loopback`	ABN	A loopback (toward the optical fiber) is active on the specified T1 port. (See the **`opr-lpbk-t1:`** and **`rls-lpbk-t1:`** commands.)
`DS1 loopback (to fiber)`	ABN	A loopback (toward the optical fiber) is active on the specified T1 port. (See the **`opr-lpbk-t1:`** and **`rls-lpbk-t1:`** commands.)

Table B – RTRV-ALM Message Descriptions (Continued)

Description	Alarm Level	Meaning
`DS1 loopback (to DSX)`	ABN	A loopback (toward the DSX) is active on the specified T1 port. (See the **`opr-lpbk-t1:`** and **`rls-lpbk-t1:`** commands.)
`DS1 trmsn test IP`	ABN	A transmission test using the internal test signal generator and monitor is in progress on the specified T1 port. (See the **`test-trmsn-t1:`** command.)
`DS3 CP failed`	CR or MN	Internal equipment failure of the specified **`DS3`** circuit pack.
`DS3 loopback`	ABN	A loopback (toward the optical fiber) is active on the specified T3 port. (See the **`opr-lpbk-t3:`** and **`rls-lpbk-t3:`** commands.)
`DS3 loopback (to fiber)`	ABN	A loopback (toward the optical fiber) is active on the specified T3 port. (See the **`opr-lpbk-t3:`** and **`rls-lpbk-t3:`** commands.)
`DS3 loopback (to DSX)`	ABN	A loopback (toward the DSX) is active on the specified T3 port. (See the **`opr-lpbk-t3:`** and **`rls-lpbk-t3:`** commands.)
`DS3 trmsn test IP`	ABN	A transmission test using the internal test signal generator and monitor is in progress on the specified T3 port. (See the **`test-trmsn-t3:`** command.)
`environment`**`n`**	CR, MJ, MN or None	The specified environmental alarm point (miscellaneous discrete input) is active. **Note:** The actual message that appears in the `Active Alarms and Status Report` for this condition can be provisioned; this is the default message. (See the **`rtrv-attr-env:`** and **`set-attr-env:`** commands.)
`excessive holdover`	MJ	The system has been in holdover mode for more than 4 hours. This may cause degraded performance (high error rates) on the transmitted and/or received signals. Whenever this condition exists, the condition `holdover mode active` also exists. **Likely cause:** See `holdover mode active`.

Table B – RTRV-ALM Message Descriptions (Continued)

Description	Alarm Level	Meaning
`ExternalMinor`	CR, MJ, MN or None	The external minor alarm input (environmental alarm input 15) is active. Typically, this input will be connected to the power shelf, and will indicate that the DC power or the cooling fan in a remote terminal cabinet has failed. **Note:** The actual message that appears in the `Active Alarms and Status Report` for this condition can be provisioned; this is the default message. (See the **`rtrv-attr-env:`** and **`set-attr-env:`** commands.)
`fan control relay failed`	MN	The thermostat on the **SYSCTL** circuit pack indicates that the cooling fan should be turned on, and the fan control relay on the **SYSCTL** circuit pack failed to operate. The system will continue to operate, but it might overheat, leading to degraded or interrupted transmission and/or circuit pack failures. **Likely cause:** Telemetry input common (TLMIC, pin 9) on **J62** not grounded (adapter plug missing from **J62** on RT shelf when **J62** does not have a cable attached.) **SYSCTL** circuit pack failure.
`fan shelf failed`	MN	The system has detected a failure of the DDM-2000 fan shelf. The **ED-8C733-30**, **G7** CO cooling fan has failed. The system will continue to operate but it may overheat. The fan must be repaired within **4 hours** of the failure, otherwise service may be interrupted and/or circuit packs may fail. **Likely cause:** Filter needs replacing, a fan pack failed, a fan pack has lost one or both power feeders, or the fan shelf control board has failed.

Table B – RTRV-ALM Message Descriptions (Continued)

Description	Alarm Level	Meaning
`forced switch`	ABN	When associated with an OC-3/OC-12 line, this message means that the identified line is not selected as the active receiving line, and an automatic or manual protection switch to make this the active receiving line will not be done. The forced switch will remain in effect until the protection switch is reset, or a lockout or inhibit switch request is received. **Note:** OC-3/OC-12 line switching is unidirectional. Because of this, the specified OC-3/OC-12 line might still be active (if the far end is selecting the specified line to receive traffic), and the far end might still be free to switch the line it is selecting to receive traffic. (See the **`switch-line:`** command.) When associated with a FUNCTION UNITS slot or a LOW SPEED service slot, this message means that the identified equipment is not active, and an automatic or manual switch to make it active will not be done. The forced switch will remain in effect until the protection switch is reset, or a lockout or inhibit switch request is received. (See the **`switch-fn:`** and **`switch-ls:`** commands.)
`frequency error`	MJ	This alarm condition indicates that an incoming timing signal has an unacceptable frequency offset. **Likely cause:** A DS1 external timing reference to the local shelf or a remote shelf has a frequency offset greater than about 20 hertz.
`holdover mode active`	NE ACTY	System is in holdover synchronization mode. **Likely cause:** System was manually switched to holdover mode (with **`switch-sync:`** command) and switch has not been reset; or the system automatically switched to holdover mode due to failure of timing references, and either (1) the reference failures have not cleared, or (2) the system is provisioned for nonrevertive synchronization mode switching, or (3) the system is provisioned for `External` timing and no external timing references are available, or (4) the system is provisioned for loop-timed operation and the optical line or OLIU circuit pack has failed, or a message indicating an upstream clock problem has been received on the sync message bits of the optical line (**`rtrv-sync:`** command) or

Table B – RTRV-ALM Message Descriptions (Continued)

Description	Alarm Level	Meaning
`holdover mode active`		(5) the system is provisioned for sync message signaling, but the upstream system from which it loop-times has not been provisioned for sync message signaling. The condition can be cleared by provisioning both systems the same (**`set-sync:`** and **`rtrv-sync:`** commands). Condition can be cleared by repairing at least one of timing references (if both are failed) and resetting synchronization mode protection switch with command **`switch-sync:s=mode,pri=reset`**.
`illegal CP type`	CR, MJ or MN	An illegal or unknown circuit pack type has been inserted into the shelf.
`inc. (from DSX) DS1 LOS`	MJ, MN or None	At least 128 consecutive zeros are received in the DS1 signal incoming from the DSX-1 or T1 interface, or the energy at the DS1 input is below a preset threshold. **Likely cause:** Hard failure of upstream equipment or facility (towards the DSX-1 or T1 interface). The DS1 input is disconnected at the backplane or the DSX-1 or T1 interface; equipment is failed or removed at DSX-1 or T1 interface.
`inc.(from DSX) DS1 sig fail`	MJ, MN or None	The bit error ratio (BER) in the DS1 signal incoming from the DSX-1 or T1 interface exceeds the provisioned failure threshold, 10^{-3}, 10^{-6}, 10^{-7}, or 10^{-8}. **Likely cause:** Mismatch of line code (AMI/B8ZS). Failure of upstream equipment or facility (towards the DSX-1 or T1 interface). Cross-talk in office wiring. Failure of the **DS1**, **DS1PM**, or **T1EXT** circuit pack.
`inc. (from sonet) DS1 LOF`	MJ	The system is unable to frame on the DS1 signal from the SONET network. **Likely cause:** Upstream failure in the DS1 signal; high bit error ratio on the received DS1 signal.
`inc. (from sonet) DS1 AIS`	MJ	DS1 alarm indication signal (AIS) is being received from the SONET network. **Likely cause:** Failure of upstream equipment or facility in the SONET network.
`inc. DS1 sync. ref. AIS`	MJ or MN	DS1 alarm indication signal (AIS) is being received from the DS1 synchronization reference signal. **Likely cause:** Failure of upstream equipment or facility (towards the DSX-1).

Table B – RTRV-ALM Message Descriptions (Continued)

Description	Alarm Level	Meaning
`inc. DS1 sync. ref. BER`	MJ or MN	The bit error ratio (BER) in the DS1 synchronization reference signal exceeds 10^{-3}. **Likely cause:** Failure of upstream equipment or facility (towards the DSX-1).
`inc. DS1 sync. ref. EOOF`	MJ or MN	Excessive out-of-frame (OOF) events were detected in the DS1 synchronization reference signal. Excessive OOF is defined as more than 512 out of frame events in one day. **Likely cause:** Failure of the incoming DS1 synchronization reference signal.
`inc. DS1 sync. ref. LOF`	MJ or MN	The system is unable to frame on the DS1 synchronization reference signal. **Likely cause:** Upstream failure in the clock providing the reference signal; high bit error ratio on the received signal, caused by failure of the office timing supply that provides the DS1 timing reference. The system is provisioned for SF format on the specified DS1 synchronization reference signal and the received DS1 signal is in ESF format.
`inc. DS1 sync. ref. LOS`	MJ or MN	At least 128 consecutive zeros were received in the DS1 synchronization reference signal or the energy at the DS1 input is below a preset threshold. **Likely cause:** Failure of the office timing supply that provides the DS1 timing reference or failure of the connection to the timing supply.
`inc. DS1 sync. ref. OOL`	MJ or MN	The incoming DS1 synchronization reference signal is out-of-lock (OOL). The frequency of the clock providing the DS1 reference signal is out of specification. **Likely cause:** Failure of the office timing supply that provides the DS1 timing reference.
`inc. (from DSX) DS3 AIS`	CR, MJ, MN, or None	The system has detected DS3 alarm indication signal (AIS) in the MUX direction (that is, coming from the DSX) for the specified DS3 signal. **Likely cause:** The incoming DS3 signal at the near end is failed, or DS3 AIS is received from the DSX-3 at the near end.
`inc. (from fiber) DS3 AIS`	NE ACTY	The system has detected DS3 alarm indication signal (AIS) in the DEMUX direction (that is, coming from the fiber) for the specified DS3 signal. **Likely cause:** The incoming DS3 signal at the far end is failed, or DS3 AIS is received from the DSX-3 at the far end.

Table B – RTRV-ALM Message Descriptions (Continued)

Description	Alarm Level	Meaning
`inc. (from DSX) DS3 LOS`	CR, MJ, MN, or None	At least 128 consecutive zeros were detected in the DS3 signal received from the DSX-3. **Likely cause:** Equipment failed or removed at DSX-3, DS3 input disconnected at the DSX-3, or at the DDM-2000 backplane.
`inc. (from DSX) DS3 OOF`	CR, MJ, MN, or None	The system has detected a DS3 out-of-frame (OOF) condition in the MUX direction (that is, coming from the DSX) for the specified DS3 signal. This condition is reported only if the DS3 interface is provisioned in VM or VMR mode. (See the **`set-t3:`** and **`rtrv-t3:`** commands.) **Likely cause:** An out-of-frame DS3 signal incoming to the DSX-3 at the near end, failure of the **DS3** circuit pack at the near end, or the DS3 signal is looped at both ends.
`inc. (from fiber) DS3 OOF`	NE ACTY	The system has detected a DS3 out-of-frame (OOF) condition in the DEMUX direction (that is, coming from the fiber) for the specified DS3 signal. This condition is reported only if the DS3 interface is provisioned in VM or VMR mode. (See the **`set-t3:`** and **`rtrv-t3:`** commands.) **Likely cause:** An out-of-frame DS3 signal incoming to the DSX-3 at the far end, failure of the **DS3** circuit pack at the far end or near end, or the DS3 signal is looped at both ends.
`inc. (from DSX) DS3 sig fail`	CR	The bit error ratio (BER) in the incoming DS3 signal exceeds the provisioned failure threshold, 10^{-3} or 10^{-6}. **Likely cause:** Failure of the upstream equipment or facility (towards the DSX-3), cross-talk in office wiring, or unprotected failure of **DS3** circuit pack.
`inc. OC1 FERF`	NE ACTY	The system has detected the OC-1 far end receive failure (FERF) signal in the incoming OC-1 signal. **Likely cause:** The far end has detected an incoming signal failure on the specified OC-1 line. This may be caused by failure of the **OLIU** circuit pack at the near end, the **OLIU** circuit pack at the far end, or the transmit cable on the specified line.
`inc. OC1 line AIS`	CR or NE ACTY	The system has detected the OC-1 line alarm indication signal (AIS) on an incoming OC-1 line. **Likely cause:** Failure of an **OLIU** circuit pack at the far end.

Table B – RTRV-ALM Message Descriptions (Continued)

Description	Alarm Level	Meaning
`inc. OC1 LOF`	CR or MN	The system has detected a loss-of-frame (LOF) condition in an incoming OC-1 signal. LOF is defined as an out of frame (OOF) condition (five consecutive errored STS-1 framing patterns) that lasts for at least three milliseconds. **Likely cause:** Failure of the **OLIU** or equivalent circuit pack at the far end, failure of the **OLIU** or equivalent circuit pack at the near end, or failure of the receive fiber.
`inc. OC1 LOS`	CR or MN	The system has detected loss of signal (LOS) condition on the OC-1 line. **Likely cause:** Failure of the **OLIU** or equivalent circuit pack at far end, failure of the receive fiber, or failure of the **OLIU** circuit pack at the near end.
`inc. OC1 sig degrade (BER)`	CR or MN	The bit error ratio (BER) in the specified OC-1 line exceeds the provisioned soft error threshold (10^{-9} to 10^{-5}) but below the hard error threshold of 10^{-3} **Likely cause:** Failure of the **OLIU** circuit pack at the near end, failure of the **OLIU** circuit pack at the far end, or failure of the receive fiber.
`inc. OC1 sig failed (BER)`	CR or MN	The bit error ratio (BER) in the received OC-1 signal exceeds 10^{-3}. **Likely cause:** Failure of the **OLIU** circuit pack at the near end, failure of the receive fiber, or failure of the **OLIU** circuit pack at the far end.
`inc. OC3 FERF`	NE ACTY	The system has detected the OC-3 far end receive failure (FERF) signal in the incoming OC-3 signal. **Likely cause:** The far end has detected an incoming signal failure on the specified OC-3 line. This may be caused by failure of the **OLIU** circuit pack at the near end, the **OLIU** circuit pack at the far end, or the transmit fiber on the specified line.
`inc. OC3 LOF`	CR or MN	The system has detected a loss-of-frame (LOF) condition in an incoming OC-3 signal. LOF is defined as an out-of-frame (OOF) condition (five consecutive errored STS-1 framing patterns) that lasts for at least 3 milliseconds. **Likely cause:** Failure of the **OLIU** circuit pack at the near end, failure of the **OLIU** circuit pack at the far end, or failure of the receive fiber.
`inc. OC3 LOS`	CR or MN	The system has detected loss-of-signal (LOS) condition on the OC-3 line. **Likely cause:** Failure of the **OLIU** circuit pack at near end, failure of the **OLIU** circuit pack at far end, or failure of the receive fiber.

Table B – RTRV-ALM Message Descriptions (Continued)

Description	Alarm Level	Meaning
`inc. OC3 line AIS`	CR, MJ, MN, or None	The system has detected OC-3 line alarm indication signal (AIS) on an incoming OC-3 line. **Likely cause:** Failure of an **OLIU** circuit pack at the far end.
`inc. OC3 sig degrade (BER)`	CR or MN	The bit error ratio (BER) in the specified OC-3 line exceeds the provisioned soft error threshold (10^{-9} to 10^{-5}) but below the hard error threshold of 10^{-3}. **Likely cause:** Failure of the **OLIU** circuit pack at the near end, failure of the **OLIU** circuit pack at the far end, failure of the receive fiber, or incorrect setting of the optical power switch on the **OLIU** circuit pack.
`inc. OC3 sig failed (BER)`	CR or MN	The bit error ratio (BER) in the specified OC-3 signal exceeds 10^{-3}. **Likely cause:** Failure of the **OLIU** circuit pack at the near end, failure of the **OLIU** circuit pack at the far end, or failure of the receive fiber.
`inc. OC12 FERF`	NE ACTY	The system has detected the OC-12 far end receive failure (FERF) signal in the incoming OC-12 signal. **Likely cause:** The far end has detected an incoming signal failure on the specified OC-12 line. This may be caused by failure of the **OLIU** circuit pack at the near end, the **OLIU** circuit pack at the far end, or the transmit fiber on the specified line.
`inc. OC12 LOF`	CR or MN	The system has detected a loss-of-frame (LOF) condition in an incoming OC-12 signal. LOF is defined as an out-of-frame (OOF) condition (five consecutive errored STS-1 framing patterns) that lasts for at least 3 milliseconds. **Likely cause:** Failure of the **OLIU** circuit pack at the near end, failure of the **OLIU** circuit pack at the far end, or failure of the receive fiber.
`inc. OC12 LOS`	CR or MN	The system has detected loss-of-signal (LOS) condition on the OC-12 line. **Likely cause:** Failure of the **OLIU** circuit pack at near end, failure of the **OLIU** circuit pack at far end, or failure of the receive fiber.
`inc. OC12 line AIS`	CR, MJ, MN, or None	The system has detected OC-12 line alarm indication signal (AIS) on an incoming OC-12 line. **Likely cause:** Failure of an **OLIU** circuit pack at the far end.

Table B – RTRV-ALM Message Descriptions (Continued)

Description	Alarm Level	Meaning
`inc. OC12 sig degrade (BER)`	CR or MN	The bit error ratio (BER) in the specified OC-12 line exceeds the provisioned soft error threshold (10^{-9} to 10^{-5}) but below the hard error threshold of 10^{-3}. **Likely cause:** Failure of the **OLIU** circuit pack at the near end, failure of the **OLIU** circuit pack at the far end, failure of the receive fiber, or incorrect setting of the optical power switch on the **OLIU** circuit pack.
`inc. OC12 sig failed (BER)`	CR or MN	The bit error ratio (BER) in the specified OC-12 signal exceeds 10^{-3}. **Likely cause:** Failure of the **OLIU** circuit pack at the near end, failure of the **OLIU** circuit pack at the far end, or failure of the receive fiber.
`inc. STS1 AIS`	CR, MJ, MN, or None	The system has detected an incoming STS-1 alarm indication signal (AIS) in the active OC-1, OC-3, or OC-12 line. The system responds by transmitting DS1 or DS3 AIS toward the DSX and transmitting STS-1 yellow toward the fiber from which the AIS is being received. **Likely cause:** Incomplete or incorrect cross-connect provisioning in an end-to-end network. Unprotected removal or failure of a **DS3**, **MXRVO**, or **OLIU** circuit pack at the far end, or unprotected optical line failure.
`inc. STS1 LOP OC1` *`slotaid`*	CR or MN	The system has detected a loss-of-pointer (LOP) condition. A valid STS-1 pointer could not be found for eight consecutive frames in the identified STS-1 signal. **Likely cause:** If this condition occurs on the STS-1 on both OC-1 lines, the likely cause is an unprotected failure of an **MXRVO** or an **OLIU** circuit pack at the far end. If this condition occurs on only one OC-1 line, the likely cause is failure of the **OLIU** circuit pack at the near end or far end.
`inc. STS1 LOP OC3` *`slotaid`*	CR or MN	The system has detected a loss-of-pointer (LOP) condition. A valid STS-1 pointer could not be found for eight consecutive frames in the identified STS-1 signal. **Likely cause:** If this condition occurs on the STS-1 on both OC-3 lines, the likely cause is an unprotected failure of an **MXRVO** or a **DS3** circuit pack at the far end. If this condition occurs on only one OC-3 line, the likely cause is failure of the **OLIU** circuit pack at the near end or far end.

Table B – RTRV-ALM Message Descriptions (Continued)

Description	Alarm Level	Meaning
`inc. STS1 LOP OC12` *`slotaid`*	CR or MN	The system has detected a loss-of-pointer (LOP) condition. A valid STS-1 pointer could not be found for eight consecutive frames in the identified STS-1 signal. **Likely cause:** If this condition occurs on the STS-1 on both OC-12 lines, the likely cause is an unprotected failure of an **MXRVO** or a **DS3** circuit pack at the far end. If this condition occurs on only one OC-12 line, the likely cause is failure of the **OLIU** circuit pack at the near end or far end.
`inc. STS1 sig degrade (BER)`	CR or MN	For STS-1 path ring applications, the bit error ratio (BER) of the specified STS-1 signal exceeds the user-provisioned signal degrade threshold. **Likely cause:** Failure at a fiber or failure of an **OLIU** circuit pack at some point in the STS-1 path.
`inc. STS1 sig failed (BER)`	CR or MN	For ring applications, the bit error ratio (BER) of the specified STS-1 signal exceeds the signal fail threshold (10^{-6}). For VT1.5 path-switched rings, the system responds by inserting VT path AIS in each pass-through VT contained in the STS-1. Locally, the system will select the VTs from the STS-1 on the other ring, as appropriate. **Likely cause:** Failure of the near end **OLIU** circuit pack reporting the STS-1 failure, failure of the far end **OLIU** circuit pack, or failure of the receive fiber if the OC-3/OC-12 is also reporting a failure.
`inc. STS1 unequipped`	CR or MN	The system has detected the unequipped code (SONET path overhead signal code label byte=0) on an in-service STS-1 channel. **Likely cause:** An upstream STS-1 cross-connect has been deleted.
`inc. STS1 yellow`	NE ACTY	The system has detected an incoming STS-1 yellow signal, which indicates that the far end is receiving STS-1 AIS on the active OC-3/OC-12 line. The system responds to the STS-1 yellow signal by transmitting DS1 or DS3 yellow toward the DSX. **Likely cause:** Incomplete or incorrect cross-connect provisioning in end-to-end network, unprotected unidirectional failure of the **OLIU** circuit pack, or fiber at some point in the end-to-end path.

Table B – RTRV-ALM Message Descriptions (Continued)

Description	Alarm Level	Meaning
`inc. VT AIS`	CR, MJ, MN, or None	The system has detected VT path alarm indication signal (AIS) incoming from the active OC-3/OC-12 line. The system responds by transmitting DS1 AIS toward the DSX-1 and VT yellow toward the fiber from which the AIS is being received. **Likely cause:** Incomplete or incorrect cross-connect provisioning in end-to-end network (In ring applications, this alarm may be caused by fiber or **OLIU** circuit pack failures). Unprotected removal or failure of a **DS1**, **DS1PM**, or **T1EXT** circuit pack at the far end.
`inc. VT LOP`	MJ or MN	The system has detected a VT loss-of-pointer (LOP) condition. **Likely cause:** Unprotected failure of a **DS1**, **DS1PM**, or **T1EXT** circuit pack at the near end or far end; unprotected failure of an **MXRVO** circuit pack at the far end; unprotected failure of a **OLIU** circuit pack at the near end or far end; unprotected failure of a protection **OLIU** circuit pack at the far end.
`inc. VT sig degrade (BER)`	MJ or MN	In a VT path switched ring, the system has detected a VT error rate that exceeds the provisioned threshold of 10^{-5} to 10^{-8}. The system selects a good VT signal from the other ring path. **Likely cause:** An **OLIU** circuit pack failure or a fiber failure at some point on the failed ring.
`inc. VT unequipped`	MJ or MN	The system has detected the unequipped code (SONET path overhead VT signal code label byte=0) on an in-service VT1.5 channel. **Likely cause:** An upstream VT1.5 cross connect has been deleted or a DS1 LOW SPEED slot has been unequipped.
`inc. VT yellow`	NE ACTY	The far end is detecting VT AIS or VT LOP and inserting VT yellow in its transmit signal. **Likely cause:** Unprotected failure of a **DS1**, **DS1PM**, or **T1EXT** circuit pack at the near end, a **DS1**, **DS1PM**, or **T1EXT** circuit pack at the far end, an **MXRVO** circuit pack at the near end, an **MXRVO** circuit pack at the far end, or fiber at some point in the end-to-end path.
`inconsistent DCC values`	MJ	The Network Side/User Side parameters are set the same at both ends of a DCC (optical span). (See the **`set-fecom:`** command.)

Table B – RTRV-ALM Message Descriptions (Continued)

Description	Alarm Level	Meaning
`inhibit auto. OS messages`	ABN	This message occurs when TL1 autonomous alarm reporting is inhibited by the TL1 **`INH-MSG`** command. This message is cleared by enabling autonomous message reporting with the TL1 **`ALW-MSG`** command.
`inhibit switch`	ABN	When associated with an OC-3/OC-12 line, this message means that the identified line is not selected as the active receiving line, and a protection switch to make this the active receiving line will not be done. No further protection switching of specified line will be done until the protection switch is reset. **Note:** OC-3/OC-12 line switching is unidirectional. Because of this, the specified OC-3/OC-12 line might still be active (if the far end is selecting the specified line to receive traffic), and the far end might still be free to switch the line it is selecting to receive traffic. (See the **`switch-line:`** command.) When associated with a FUNCTION UNITS slot or timing reference, this message means that the identified equipment or reference is not active, and protection switches to the identified equipment or reference will not be done until the protection switch is reset. (See the **`switch-fn:`** and **`switch-sync:`** commands.)
`lockout of protection`	ABN	When associated with an OC-3/OC-12 line, this message means that the identified line is not selected as the active receiving line, and a protection switch to make this the active receiving line will not be done. **Note:** OC-3/OC-12 line switching is unidirectional. Because of this, the specified OC-3/OC-12 line might still be active (if the far end is selecting the specified line to receive traffic), and the far end might still be free to switch the line it is selecting to receive traffic. The lockout will remain in effect until the protection switch is reset or until a protection switch inhibit request is entered. (See the **`switch-line:`** command.) When associated with a LOW SPEED (**LS**) protection slot, this message means that no service slot in the whole low speed group will be allowed to switch to protection. The lockout will remain in effect until the protection switch is reset. (See the **`switch-ls:`** command.)

Table B – RTRV-ALM Message Descriptions (Continued)

Description	Alarm Level	Meaning
`lockout of service`	ABN	When associated with a LOW SPEED (**LS**) service slot, this message means that the specified low speed service slot is active and will not be switched to protection. The lockout will remain in effect until the protection switch is reset. (See the **`switch-ls:`** command.)
`LS prot assembly removed`	MJ	The system has been reset with no low-speed protection assembly installed. This is not a valid system configuration. The user should install a LOW SPEED protection assembly and execute the reset function.
`LS prot mode not chgd-(crs)`	MJ	An attempt to change the low-speed protection mode has failed because all cross connections terminating on LOW SPEED ports were not removed. The user should remove all such cross connections and execute the reset function.
`manual switch`	ABN	The specified **DS1**, **DS1PM**, or **T1EXT** circuit pack is manually switched to protection. The manual switch will remain in effect until the protection switch is reset or until a failure occurs and an automatic switch preempts the manual switch. (See the **`switch-ls:`** command.)
`manual sync. mode switch`	ABN	The synchronization mode has been manually switched to holdover or free running and will remain in that mode until the switch request is reset. (See the **`switch-sync:`** command.)
`OLIU connector failed`	MN	Failure or removal of the OC-12 **29-Type OLIU** faceplate connector which carries STS-1/STS-3c ring pass through traffic on the OC-12 ring interface on the FiberReach shelf. Failure or removal of the OC-3 **28-Type OLIU** faceplate connector.
`OLIU CP failed`	CR or MN	Internal equipment failure of the specified **OLIU** circuit pack.
`program installation IP`	Status	This system is being used to install software into another system. If this procedure is interrupted prior to completion, the remote systems' control circuit packs will likely become inoperable until another install program attempt is successful.

Table B – RTRV-ALM Message Descriptions (Continued)

Description	Alarm Level	Meaning
`protection CP different`	MN	This message will only be seen when a FiberReach node is configured for 1X7 low-speed protection. The circuit pack in the protection slot is different from and will not protect all of the circuit packs in the service slots. If this is acceptable, execute the update (upd) command to clear the alarm. Otherwise, one or more of the service or protection circuit packs must be changed.
`section DCC channel failed`	MJ or MN	The system cannot communicate with the far-end system through the SONET section data communications channel (DCC). **Likely cause: SYSCTL** or **OHCTL** circuit pack failure, reset, or initialization at the far end, failed program installation at far end, program installation in progress at the far end, or **SYSCTL** circuit pack failure at the near end.
`SYSCTL CP failed`	MJ	Internal equipment failure of the **SYSCTL** circuit pack. The system has determined that some part of the **SYSCTL** circuit pack has failed. **Note:** Some types of failures cannot be reported since the **SYSCTL** circuit pack cannot function under these conditions.
`SYSCTL standby boot fail`	MN	**SYSCTL** circuit pack failed during local or remote software download.

Table B – RTRV-ALM Message Descriptions (Continued)

Description	Alarm Level	Meaning
`unexpected CP switches`	CR, MJ, or MN	When associated with the **SYSCTL** slot, this message means that an invalid switch setting has been selected or some of the unused switches are not in the prescribed position. For LOW SPEED slots equipped with **DS1**, **DS1PM**, or **T1EXT** circuit packs or FUNCTION UNITS slots equipped with **DS3** circuit packs, this message means that a change in a circuit pack switch setting was made.
`unexpected CP type`	CR, MJ, MN, or Status	When associated with a FUNCTION UNITS slot, this message means that a different but supported circuit pack is inserted in a slot already provisioned. When associated with a LOW SPEED slot equipped with a **DS1**, **DS1PM**, or **T1EXT** circuit pack, this message means that a different but supported **DS1**, **DS1PM**, or **T1EXT** circuit pack type (for example, **BBF3** circuit pack) is inserted in a slot already provisioned. When associated with a **MAIN** slot, if a **28-Type OLIU** or **29-Type OLIU** is inserted into a **MAIN** slot of a FiberReach shelf expecting a **26-Type OLIU**, the alarm level for the resulting `unexpected CP type` alarm is "status". If the **28-Type OLIU** or **29-Type OLIU** fails, a `OLIU CP failed` alarm is reported; but the status condition is maintained until the circuit pack is removed.
`X.25 communication failure`	MJ	Failure in the X.25 communication channel. **Likely cause:** Failure of the X.25 communication equipment or failure at the OS.

Clear Obscure Failure Condition

1. **NOTE:**
   It is assumed that a set of alarms or conditions exist which are inconsistent or may not have associated LEDs indications.

   Perform LED test by depressing the **ACO/TST** pushbutton or using the CIT command **`test-led`**.

   Reference: **DLP-509**

2. Did any LED fail the LED test?

   If **YES**, do **TAP-115**.

   If **NO**, continue with **Step 3**.

3. Is a CIT available?

   If **YES**, proceed to **Step 7**.

   If **NO**, continue with **Step 4**.

4. Are there associated LED indications (for example, **NE ACTY** LED lighted; **CR**, **MJ**, **MN**, **PMN**, etc. LED lighted when alarm is present, etc.)?

   If **YES**, continue with **Step 5**.

   If **NO**, proceed to **Step 11**.

5. **NOTE:**
   Unseating and reseating the **SYSCTL** performs a reset procedure which restarts the software program.

   Unseat and reseat **SYSCTL** circuit pack. Do not depress **UPD/INIT** button.

6. Is trouble still present?

   If **YES**, proceed to **Step 9**.

   If **NO**, **STOP. YOU HAVE COMPLETED THIS PROCEDURE**.

7. Use the CIT and **`reset`** command to reset **SYSCTL**.

8. Is the trouble still present?

   If **YES**, continue with **Step 9**.

   If **NO**, **STOP. YOU HAVE COMPLETED THIS PROCEDURE**.

9. **CAUTION:**
   Replacing the **SYSCTL** *involves updating the internal memory on the circuit pack.*

   Replace the **SYSCTL**.

   Reference: **DLP-501**

10. Is the trouble still present?

    If **YES**, continue with **Step 11**.

    If **NO**, **STOP. YOU HAVE COMPLETED THIS PROCEDURE**.

11. **NOTE:**
    The problem may be in the backplane wiring of the DDM-2000 FiberReach shelf. One way to verify this is to swap the **SYSCTL** and any circuit pack with an inconsistent diagnostic indication with the corresponding circuit packs in another FiberReach shelf. If the problem moves with the circuit packs, it means that one or more of the circuit packs is defective. If the problem stays with the original FiberReach shelf, the entire assembly, but not the circuit packs, should be replaced. The FiberReach shelf has a printed backplane and cannot be repaired in the field.

    NOTE:
    A CIT and the system **`rtrv-( )`** commands may be helpful in determining the condition of the system.

    Use CIT and **`rtrv-alm`** command to get an alarm and status report. See the COMMANDS AND REPORTS section of this manual under **RTRV-ALM** for a description of each message retrieved with the **`rtrv-alm`** command.

    If you need technical assistance, notify your supervisor, your local technical support organization, or call Lucent Technologies RTAC, per local operating instructions.

12. **STOP. YOU HAVE COMPLETED THIS PROCEDURE**.

Clear Abnormal (ABN) Indication

1. **NOTE:**
   The **ABN** LED indicates a manually caused abnormal condition. Table A lists the conditions which may cause an **ABN** alarm. These conditions may have been initiated locally, from another DDM-2000 at the other end of the facility, or through telemetry.

   Is the **CR**, **MJ**, **MN**, or **PMN** LED on the User Panel lighted?

   If **YES**, continue with **Step 2**.

   If **NO**, proceed to **Step 4**.

2. **NOTE:**
   It is better to clear the higher priority alarms (**CR**, **MJ**, etc.) first, although in most cases this will not clear an **ABN** alarm. If the higher priority alarm is cleared first, you can then use this procedure to clear the **ABN** alarm.

   NOTE:
   In some cases, clearing an **ABN** alarm will result in a higher priority alarm being cleared. For example, clearing the abnormal condition `manual sync. mode switch` may cause an `excessive holdover` **MJ** alarm to clear.

   Refer to Task Index **IXL-001** for procedure to clear the indicated alarm.

3. **STOP. YOU HAVE COMPLETED THIS PROCEDURE.**

4. Connect the CIT to the **CIT** connector on the near-end User Panel and log in to the near-end system, if not already performed.

   Reference: **DLP-521**

5. **NOTE:**
   The **`rtrv-alm`** command can be used to display a report of active alarm and status conditions. The Commands and Reports section of this manual gives a description of the command.

   NOTE:
   The `Active Alarm and Status Report` is output automatically following CIT log in. The report shown in Figure 1 is an example that shows several entries. There may be only one entry in the actual report.

   Note the information in the `Source Address` and `Description` columns for the top entry/entries above the first single-dashed line in the `Active Alarm and Status Report` (Figure 1) (for example, “abnormal a-1-1 MM-DD HH:MM:SS nsa DS1 loopback”).

```
/*  Active Alarms and Status Report
=========================================================
Alarm       Source       Date      Time     Srv  Description
Level       Address          Detected
=========================================================
abnormal    a-1-1       MM-DD   HH:MM:SS    nsa  DS1 loopback
---------------------------------------------------------
*/
```

Figure 1 – Example of Active Alarms and Status Report

6. **NOTE:**
   Local alarm or status conditions have a Source Address of the local slot, line, port, channel, path, cross-connection, or operations interface (DCC, X.25, etc.) where the event occurred. (See *Addresses* in the Commands and Reports section of this manual.) Use the **`rtrv-alm`** command to get another report, if necessary.

   Note the **local** trouble indication in the `Description` column of the `Active Alarm and Status Report`, starting with the highest alarm level (`abnormal`) listed in the `Alarm Level` column.

7. Use **opr-aco** command to silence active audible office alarms, if required.

8. Find the trouble description in Table A for the highest alarm level and note the related commands.

Table A - Abnormal (ABN) Alarm and Status Conditions

Description	Related Commands
forced switch inhibit switch	**switch-line** **switch-fn** **switch-sync**
lockout of protection	**switch-line** **switch-ls**
lockout of service manual switch	**switch-ls**
manual sync. mode switch	**switch-sync**
DS1 loopback DS1 loopback (to Fiber) DS1 loopback (to DSX or T1)	**opr-lpbk-t1** **rls-lpbk-t1**
DS3 loopback DS3 loopback (to Fiber) DS3 loopback (to DSX)	**opr-lpbk-t3** **rls-lpbk-t3**
DS1 trmsn test IP DS3 trmsn test IP	**test-trmsn-t1** **test-trmsn-t3**
inhibit auto. OS messages	**INH-MSG** **ALW-MSG**

9. **CAUTION:**
You must determine the reason for the **ABN** *indication before attempting to clear it.*

Use the command **rtrv-state-( )** to see if you can determine the condition associated with the **ABN** indication.

10. Contact the appropriate personnel at your location, at the far-end location, and at any central maintenance location to determine the reason for the **ABN** indication before clearing it.

11. Have you determined that it is appropriate for you to clear the condition causing the **ABN** indication?

If **YES**, proceed to **Step 14**.

If **NO**, continue with **Step 12**.

12. There is nothing more to be done until the reason for the **ABN** condition is known.

13. **STOP. YOU HAVE COMPLETED THIS PROCEDURE**.

14. Use the appropriate command to clear the abnormal condition. The command will be **`rls-lpbk-( )`** or **`switch-( )`**.

15. Is the **ABN** indicator still lighted?

    If **YES**, continue with **Step 16**.

    If **NO**, **STOP. YOU HAVE COMPLETED THIS PROCEDURE**.

16. Use the **`rtrv-alm`** command to determine if there are other conditions causing the **ABN** alarm. See Table A.

17. Does the **`rtrv-alm`** command report any other abnormal conditions. See Table A.

    If **NO**, do **TAP-108**.

    If **YES**, repeat this procedure from **Step 6**.

Clear Flashing FAULT LED Indication

1. Is the **MN** LED lighted on the User Panel?

   If **YES**, do **TAP-112**.

   If **NO**, continue with **Step 2**.

2. Is the **MJ** LED lighted on the User Panel?

   If **YES**, do **TAP-102**.

   If **NO**, continue with **Step 3**.

3. Is the **CR** LED lighted on the User Panel?

   If **YES**, do **TAP-101**.

   If **NO**, continue with **Step 4**.

4. Is the **FAULT** LED flashing on the faceplate of one or more **DS1**, **DS1PM**, **T1EXT**, or **DS3** circuit packs?

   If **YES**, continue with **Step 5**.

   If **NO**, proceed to **Step 7**.

5. **NOTE:**
   There is an incoming DS1 or DS3 signal failure. This failure can be further isolated using a CIT.

   Connect the CIT to the connector on the User Panel and establish session.

   Reference: **DLP-521**

6. Refer to the Commands and Reports section of this manual under **RTRV-( )** and use the **`rtrv-( )`** commands to further isolate the particular incoming DS1 or DS3 signal failure.

7. Switch service to protection. If LED is flashing on protection **DS1**, **DS1PM**, **T1EXT**, or **DS3** circuit pack, issue trouble report of bad incoming signal at input to **DS1**, **DS1PM**, **T1EXT**, or **DS3** circuit pack with flashing LED(s). If LED is not flashing on protection **DS1**, **DS1PM**, **T1EXT**, or **DS3** circuit pack, replace service **DS1**, **DS1PM**, **T1EXT**, or **DS3** circuit pack [**DLP-523**].

8. **STOP. YOU HAVE COMPLETED THIS PROCEDURE**.

Clear OLIU or Fiber Trouble
Path Protected Ring/1+1 Linear Extensions

1. **WARNING:**
Open optical connectors may emit invisible laser radiation. Do not view beam with optical instruments. Avoid direct exposure to the beam. Use of controls or adjustments or performance of procedures other than those specified herein may result in hazardous radiation exposure.

CAUTION:
When removing **OLIU** *circuit packs or replacing fiber, ensure that all VT/STS paths are active on the* **OLIU** *and fiber that is* **NOT** *being removed or replaced. When available, use a CIT and the* **`switch-path-( ):all:pri=manual`** *command to switch all VT/STS paths to the* **OLIU** *and fiber that are not being removed or replaced. It is also recommended to login to the far end of the* **OLIU** *and use the* **`switch-path-( ):all:pri=manual`** *command to switch all VT/STS paths to the* **OLIU** *and fiber that are not being removed or replaced. Be aware that if locked cross-connections are used, service will be interrupted when an* **OLIU** *is replaced.*

CAUTION:
If timing source has been previously set to optical line (main-1 or main-2) that has failed, use the **`set-sync:src=main-1`** *or* **`main-2`** *command to select timing source from good optical line.*

NOTE:
A lighted **FAULT** LED on the **OLIU** indicates that either the receiver, the transmitter, or both has failed. A flashing **FAULT** LED on the **OLIU** indicates that either the near-end receiver, far-end transmitter, or incoming (receive) fiber has failed. In a Path Protected Ring network, both **OLIU**s are normally **ACTIVE**. One **OLIU** carries service on one path of the ring and the other **OLIU** carries service on the other path. If possible, log into shelf associated with source address (for example, `main-2`) of `inc. OC1 LOS`, `inc. OC3 LOS`, or `inc. OC12 LOS`, etc. to see if circuit pack is removed or failed.

Was **OLIU**(s) removed or being replaced or installed when alarm occurred?

If **YES**, continue with **Step 2**.
If **NO**, proceed to **Step 8**.

2. **NOTE:**
   An alarm will occur if a circuit pack is removed without performing an update by momentarily depressing the **UPD/INIT** button or using the update (**`upd`**) command.

   Is any previously installed **OLIU**(s) removed from the shelf?

   If **YES**, continue with **Step 3**.
   If **NO**, proceed to **Step 5**.

3. Determine the reason the circuit pack was removed. If the same circuit pack is to be reinserted, reinstall the circuit pack. If the circuit pack was removed and is not to be reinserted, momentarily depress the **UPD/INIT** button on the **SYSCTL** to remove the circuit pack from equipment inventory.

4. **STOP. YOU HAVE COMPLETED THIS PROCEDURE**.

5. Is **OLIU**(s) installed in correct slot(s) (**`rtrv-eqpt:`**)?

   If **NO**, continue with **Step 6**.
   If **YES**, proceed to **Step 8**.

6. Remove optical fibers from circuit packs, if connected, then remove circuit pack(s) from wrong slot(s). Install circuit pack(s) into correct slot(s). Reconnect optical fibers (**DLP-514**).

7. **STOP. YOU HAVE COMPLETED THIS PROCEDURE**.

8. Is **FAULT** LED lighted (`OLIU CP failed`) on **OLIU** at any location associated with source address?

   If **YES**, continue with **Step 9**.
   If **NO**, proceed to **Step 11**.

9. Replace **OLIU** with lighted **FAULT** LED.

   Reference: **DLP-523**

10. Is **FAULT** LED still lighted (`OLIU CP failed`) on **OLIU**?

    If **YES**, do **TAP-106**.
    If **NO**, **STOP. YOU HAVE COMPLETED THIS PROCEDURE**.

11. Is **FAULT** LED flashing (`inc. OC1 LOS`, `inc. OC3 LOS`, or `inc. OC12 LOS`) on **OLIU**(s)?

    If **YES**, continue with **Step 12**.
    If **NO**, proceed to **Step 14**.

12. **NOTE:**
    Indications are that the incoming (receive) optical fiber line has failed or near-end or far-end **MAIN-1** or **MAIN-2 OLIU**s have failed.

    Check optical fiber lines per local procedures, repair if necessary. If no trouble is found in the optical fibers, replace **OLIU**(s) at near end first (**DLP-523**). If trouble still exists, replace **OLIU**(s) at far end. Check for removed or failed **TGS**, **TG3**, **MXRVO**, or **DS3** circuit packs at the far end. If trouble still exists, trouble is in receive optical fiber associated with **OLIU** with flashing LED. Clear trouble in optical fiber per local procedures.

13. **STOP. YOU HAVE COMPLETED THIS PROCEDURE**.

14. For technical assistance, notify your supervisor, your local technical support organization, or call Lucent Technologies RTAC, per local operating instructions.

15. **STOP. YOU HAVE COMPLETED THIS PROCEDURE**.

Clear Minor (MN) Alarm

1. **NOTE:**
   Table A lists some possible causes and indications of minor alarms.

   Connect the CIT to the **CIT** connector on the near-end User Panel and log in or remote log in to the near-end system, if not already performed.

   Reference: **DLP-521**

2. **NOTE:**
   The **`rtrv-alm`** command can be used to display a report of active alarm and status conditions. The Commands and Reports section of this manual gives a description of the command.

   NOTE:
   The `Active Alarm and Status Report` is output automatically following CIT log in. The report shown in Figure 1 is an example that shows several entries. There may be only one entry in the actual report.

   Note the information in the `Source Address` and `Description` columns for the top entry/entries above the first single-dashed line in the `Active Alarm and Status Report` (Figure 1) (for example, "`MINOR dcc-m2 MM-DD HH:MM:SS nsa section channel failed`").

```
*Active Alarms and Status Report
================================================================
Alarm      Source     Date       Time        Srv   Description
Level      Address    Detected
================================================================
MINOR      dcc-m2     MM-DD      HH:MM:SS    nsa   section dcc channel failed
----------------------------------------------------------------
ne-acty    m2-1       MM-DD      HH:MM:SS     -    inc. STS1 yellow
ne-acty    m2-2       MM-DD      HH:MM:SS     -    inc. STS1 yellow
ne-acty    main-2     MM-DD      HH:MM:SS     -    inc. OC1 FERF
*/
```

Figure 1 – Example of Active Alarms and Status Report

3. **NOTE:**
   Local alarm or status conditions have a Source Address of the local slot, line, port, channel, path, cross-connection, or operations interface (DCC, X.25, etc.) where the event occurred. (See *Addresses* in the Commands and Reports section of this manual.) Use the **`rtrv-alm`** command to get another report, if necessary.

   Note the trouble indication in the `Description` column of the `Active Alarm and Status Report`, starting with the highest alarm level (Minor) listed in the `Alarm Level` column.

4. Use **`opr-aco`** command to silence active audible office alarms, if required.

5. Find the trouble description in Table A for the highest alarm level and go to the indicated step or procedure.

Table A – Minor (MN) Alarm Conditions

Alarm Level or LED Inidication	Trouble Description (Note)	Likely Causes	Step or Procedure
`MINOR`. **MN** LED lighted.	`-48V power/fuse FA|FB failed`	A -48V power feeder or fuse on User Panel has failed.	Check power feeders or replace fuse. [DLP-511]
	`automatic protection switch (APS) channel failed`	Failure of near-end or far-end protection **OLIU** CP in **MAIN-2(P)** slot or failure of receive fiber on the protection line at near end.	TAP-111
	`automatic protection switch (APS) - automatic lock`	Four automatic switches of a single **DS1**, **DS1PM**, or **T1EXT** circuit pack in 10 minutes, probably because of an intermittent failure of the **DS1**, **DS1PM**, or **T1EXT** circuit pack.	Replace **DS1**, **DS1PM**, or **T1EXT** circuit pack. [DLP-523]
	`CP not allowed - (crs)`	Circuit pack does not support the manual cross-connection(s) currently provisioned for this slot.	Change circuit pack or change cross-connections.
	`CP not allowed - (eqpt)`	A **DS1**, **DS1PM**, **T1EXT**, or **DS3** CP is installed in a Low Speed or Function Units slot and has caused a protection mismatch between a service slot and a protection slot. Identifies a circuit pack upgrade that is not allowed.	Change service or protection circuit pack to eliminate mismatch. User will have to update the slot pair to "*auto*" before inserting the new circuit pack type.

Table A – Minor (MN) Alarm Conditions (Continued)

Alarm Level or LED Inidication	Trouble Description (Note)	Likely Causes	Step or Procedure
MINOR. **MN** LED lighted	protection CP different	This message will only be seen when a FiberReach node is configured for 1X7 low speed protection. The **DS1**, **DS1PM**, or **T1EXT** circuit pack in the protection slot is different from and will not protect all of the circuit packs in the service slots.	If this is acceptable, execute the update function to clear the alarm. Otherwise, one or more of the **DS1**, **DS1PM**, or **T1EXT** service or protection circuit packs must be changed.
	inc. DS1 sync. ref. LOS inc. DS1 sync. ref. LOF inc. DS1 sync. ref. BER inc. DS1 sync. ref. AIS inc. DS1 sync. ref. OOL inc. DS1 sync. ref. EOOF inc. DS1 sync. ref. OOL	Failure of incoming sync. ref. signal.	Step 48
MINOR. **MN** LED lighted. **FAULT** LED lighted on affected circuit pack.	DS1 CP failed DS1PM CP failed OLIU CP failed T1EXT CP failed DS3 CP failed	Internal failure of circuit pack with lighted LED	Step 7
MINOR. **MN** LED lighted.	CP removed	A **DS1**, **DS1PM**, **T1EXT**, **DS3**, or **OLIU** circuit pack previously installed in this system is removed. The circuit pack should be replaced, or an **upd** command should be done to remove it from the system equipment list.	Step 15

Table A – Minor (MN) Alarm Conditions (Continued)

Alarm Level or LED Inidication	Trouble Description (Note)	Likely Causes	Step or Procedure
MINOR. **MN** LED lighted.	environment**n***	The specified environmental alarm point (misc. discrete input) is active at RT. Note: The actual message that appears in the alarm and status report for this condition can be provisioned; this is the default message. See the **rtrv-attr-env** and **set-attr-env** commands.	Use **rtrv-attr-env** command at RT to determine trouble.
	ExternalMinor†	The specified environmental alarm point (miscellaneous discrete input) is active. Typically, this input will be connected to the power shelf, and will indicate that the DC power or the cooling fan in a remote terminal cabinet has failed. Note: The actual message that appears in the alarm and status report for this condition can be provisioned; this is the default message. See **rtrv-attr-env** and **set-attr-env** commands.	Use **rtrv-attr-env** command at RT to determine trouble.
	OLIU connector failed	Failure or removal of the OC-12 **29-Type OLIU** faceplate connector (ribbon cable) which carries STS-1/STS-3c ring pass through traffic on the OC-12 ring interface on the FiberReach shelf. Failure or removal of the OC-3 **28-Type OLIU** faceplate connector (ribbon cable).	Reconnect faceplate connector or replace, if failed.

Table A – Minor (MN) Alarm Conditions (Continued)

Alarm Level or LED Inidication	Trouble Description (Note)	Likely Causes	Step or Procedure
`MINOR`. **MN** LED lighted. LEDs lighted on fan shelf.	`fan control relay failed`	**SYSCTL** circuit pack failure.	Step 7
`MINOR`. **MN** LED lighted. **FAULT** LED lighted on **SYSCTL**.	`fan shelf failed`	Filter needs replacing, a fan pack has failed, fan shelf has lost one or both power feeders, or the fan shelf control board has failed. The fan must be replaced within 4 hours of the failure; otherwise service might be interrupted and/or circuit packs might fail.	Refer to Trouble Clearing Procedures for the specific cabinet in which fan shelf is located.
`MINOR`. **MN** LED lighted. **FAULT** LED lighted on affected circuit pack.	`illegal CP type`	An illegal or unknown circuit pack type has been inserted into the shelf.	Remove circuit pack and install correct circuit pack.

	`inc. (from DSX) DS1 LOS†`
	`inc. (from DSX) DS1 sig fail†`
	`inc. (from DSX) DS3 AIS*`
	`inc. (from DSX) DS3 LOS*`
	`inc. (from DSX) DS3 OOF*`
	`inc. (from DSX) DS3 sig fail*`
		Hard failure of upstream equipment or facility (towards the DSX-1/T1 or DSX-3 interface). The DS1/T1 or DS3 input is disconnected at the backplane or the DSX-1/T1 or DSX-3 interface; equipment is failed or removed at the DSX-1/T1 or DSX-3 interface. Mismatch of the line code (AMI/B8ZS); cross talk in office wiring; failure of **DS1**, **DS1PM**, **T1EXT**, or **DS3** circuit pack.	Step 13

Table A – Minor (MN) Alarm Conditions (Continued)

Alarm Level or LED Inidication	Trouble Description (Note)	Likely Causes	Step or Procedure
MINOR. **MN** LED lighted. **FAULT** LED flashing on **OLIU**.	inc. OC1 LOF inc. OC1 LOS inc. OC1 sig degrade (BER) inc. OC1 sig failed (BER) inc. OC3 LOF inc. OC3 LOS inc. OC3 sig degrade (BER) inc. OC3 sig failed (BER) inc. OC12 LOS inc. OC12 LOF inc. OC12 sig degrade (BER) inc. OC12 sig failed (BER)	Failure of **OLIU** at near end or far end, or failure of receive fiber.	TAP-111
	inc. STS1 LOP OC1 slotaid inc. STS1 LOP OC3 slotaid inc. STS1 LOP OC12 slotaid	If failure occurs on the STS-1 both OC-1, OC-3, or OC-12 lines; the likely cause is an unprotected failure of an **MXRVO** or an **OLIU** circuit pack at the far end.	Step 31
		If failure occurs on only one OC-1, OC-3, or OC-12 line; the likely cause is failure of the **OLIU** circuit pack at the near or far end.	TAP-111
MINOR. **MN** LED lighted.	inc. OC3 line AIS* inc. OC12 line AIS*	Failure of **OLIU** circuit pack at the far end,	Step 46
	inc. STS1 AIS*	Incomplete or incorrect cross-connect provisioning in an end-to-end network; unprotected removal or failure of **OLIU** circuit pack at far end; or unprotected optical line failure.	TAP-118

Table A – Minor (MN) Alarm Conditions (Continued)

Alarm Level or LED Inidication	Trouble Description (Note)	Likely Causes	Step or Procedure
MINOR. **MN** LED lighted.	inc. STS1 sig. degrade (BER)	Failure of **OLIU** circuit pack at some point in the STS-1 path or failure of receive fiber.	TAP-111
	inc. STS1 sig. failed (BER)	Failure of the near end **OLIU** circuit pack reporting the STS-1 failure; failure of the far end **OLIU**; or failure of the receive fiber if the OC-n is also reporting a failure.	TAP-111
	inc. STS1 unequipped	An STS-1 cross-connect has been deleted in upstream equipment interfacing with the DDM-2000 OC-1, OC-3, or OC-12 ring.	Find the deleted cross-connect in the upstream equipment.
	inc. VT AIS*	Incomplete or incorrect cross-connect provisioning in end-to-end network; unprotected removal or failure of **DS1**, **DS1PM**, or **T1EXT** circuit pack at far end. In ring applications; a non-service affecting VT AIS alarm message may result from an upstream **OLIU** circuit pack or fiber failure affecting only one ring direction. A VT yellow alarm message is not returned for a non-service affecting VT AIS.	TAP-118

Table A – Minor (MN) Alarm Conditions (Continued)

Alarm Level or LED Inidication	Trouble Description (Note)	Likely Causes	Step or Procedure
MINOR. **MN** LED lighted.	inc. VT LOP	Unprotected failure of **DS1**, **DS1PM**, or **T1EXT** circuit pack at near end or far end, unprotected failure of **MXRVO** circuit pack at far end, unprotected failure of **OLIU** circuit pack at the near end or far end, or unprotected failure of both **OLIU** circuit packs at far end.	Replace circuit pack associated with alarm.
	inc. VT sig degrade (BER)	An **OLIU** circuit pack failure or a fiber failure at some point on the failed ring.	TAP-111
	inc. VT unequipped	An VT1.5 cross-connect has been deleted in upstream equipment interfacing with the DDM-2000 OC-1, OC-3, or OC-12 ring.	Find the deleted cross-connect in the upstream equipment.
	section DCC channel failed	**SYSCTL** circuit pack failure, reset, or initialization at far end. **SYSCTL** circuit pack removed from a site. Program installation in progress or failed at far end. **SYSCTL** or **OLIU** circuit pack failed or removed at near end. Fiber failure between this node and node connected to the source address (no communication with other end).	Step 35
MINOR. **MN** LED lighted. **FAULT** LED lighted on affected circuit pack.	SYSCTL standby boot fail	**SYSCTL** circuit pack failed during local or remote software download.	Try software download again; download a compatible version of software; or replace **SYSCTL** circuit pack.

Table A – Minor (MN) Alarm Conditions (Continued)

Alarm Level or LED Inidication	Trouble Description (Note)	Likely Causes	Step or Procedure
`MINOR`. **MN** LED lighted. **FAULT** LED lighted on affected circuit pack	`unexpected CP switches`	When associated with the **SYSCTL** circuit pack; an invalid switch setting has been selected or some of the unused switches are not in the prescribed position. For **DS1**, **DS1PM**, or **T1EXT** circuit pack; switch settings invalid, different from other circuit pack, or different than they were before circuit pack was removed or replaced.	Step 27
	`unexpected CP type`	When associated with a low speed slot, this message means that a different but supported circuit pack type (for example **BBF3**) is inserted in a slot already provisioned.	Step 24

* May be provisioned for Critical, Major, Minor, or no alarm.
† May be provisioned for Major, Minor, or no alarm.
Note: Similar descriptions of trouble may also appear in the CIT alarm and status report.

6. Is a **FAULT** LED lighted or flashing on an **OLIU** circuit pack?

   If **YES**, do **TAP-111**.

   If **NO**, continue with **Step 7**.

7. Is the **FAULT** LED lighted (not flashing) on the faceplate of one and only one circuit pack of the **DDM-2000**?

   If **YES**, continue with **Step 8**.

   If **NO**, proceed to **Step 11**.

8. **CAUTION:**
   Replacement circuit packs may have option switches which must be properly set before the circuit pack is installed.

   Check circuit pack option switch settings for improper or invalid settings. If no trouble is found, refer to **DLP-523** and replace the circuit pack with the lighted **FAULT** LED.

9. Is the **MN** LED off on the User Panel?

   If **YES**, **STOP. YOU HAVE COMPLETED THIS PROCEDURE**.

   If **NO**, continue with **Step 10**.

10. Is the **FAULT** LED lighted on the faceplate of the replacement circuit pack just installed?

    If **YES**, do **TAP-106**.

    If **NO**, return to **Step 2**.

11. Is the **FAULT** LED on the faceplate of one or more circuit packs flashing?

    If **YES**, continue with **Step 12**.

    If **NO**, proceed to **Step 15**.

12. Find the circuit pack(s) with the flashing LED(s) in Table B and go to the step indicated.

Table B – Flashing LEDs

Circuit Pack With Flashing LED	Go To
DS1/DS1PM/T1EXT	Step 13
DS3	Step 13

13. There is an incoming DS1/T1 or DS3 signal failure. Switch service to protection. If LED is flashing on protection **DS1**, **DS1PM**, **T1EX** , or **DS3** circuit pack, issue trouble report of bad incoming signal at input to **DS1**, **DS1PM**, **T1EXT**, or DS3 circuit pack with flashing LED(s). If LED is not flashing on protection **DS1**, **DS1PM**, **T1EXT**, or **DS3** circuit pack, replace service **DS1**, **DS1PM**, **T1EXT**, or **DS3** circuit pack [**DLP-523**].

14. **STOP. YOU HAVE COMPLETED THIS PROCEDURE**.

15. Have two of the same type (service and protection **DS1**, **DS1PM**, **T1EXT**, or **DS3**) circuit packs been removed from the system?

    If **YES**, continue with **Step 16**.

    If **NO**, proceed to **Step 18**.

16. Determine the reason the circuit packs were removed. If the same circuit pack is to be reinserted and no switch settings are changed, reinstall the circuit pack. If the circuit pack was removed and switch settings changed, reinstall the circuit pack and momentarily depress the **UPD/INIT** button on the **SYSCTL**. If the circuit pack is not to be reinserted, momentarily depress the **UPD/INIT** button on the **SYSCTL** to remove the circuit pack from the inventory.

17. **STOP. YOU HAVE COMPLETED THIS PROCEDURE**.

18. **CAUTION:**
    If fuse on User Panel is not blown, trouble may be a failure of **one** *of the –48V DC power feeders. Removing the wrong fuse or disconnecting the wrong feeder for power measurement will cause service interruption. Blown fuses are detected by noting that the fuse indicator pin is extended through the fuse holder.*

    NOTE:
    If fuse is not blown on the User Panel, check office battery distribution fuse board for blown fuses or tripped breakers. Replace fuse or reset breaker if necessary.

    Is –48V fuse blown on User Panel?

    If **YES**, continue with **Step 19**.

    If **NO**, do **TAP-113**.

19. Replace blown –48V fuse on User Panel?

20. Did fuse blow again?

    If **YES**, proceed to **Step 22**.

    If **NO**, continue with **Step 21**.

21. Is MINOR alarm cleared?

    If **YES**, **STOP. YOU HAVE COMPLETED THIS PROCEDURE**.

    If **NO**, proceed to **Step 24**.

22. **CAUTION:**
Removal of an unprotected circuit pack may cause service interruption.

NOTE:
The –48V power feeders/fuses on the User Panel supply power to DC-to-DC converters on the **OLIU**, **DS1**, **DS1PM**, **T1EXT**, **DS3** and **SYSCTL** circuit packs. It is unlikely that a circuit pack failure would cause only one feeder fuse to blow. The more probable cause of failure of only one feeder fuse would be a short of the backplane feeder path or a problem with a circuit pack shelf connector. After a thorough inspection of the backplane, if no trouble is found, the circuit packs can be removed one at a time to try and isolate the trouble.

Remove ***one*** of each pair of circuit packs listed in the above note and replace blown –48V fuse. If fuse does not blow again, reinstall all removed circuit packs one at a time, beginning with the **SYSCTL**. Replace any circuit pack that causes the fuse to blow (**DLP-523**). If fuse blows again with one of each pair of circuit packs removed, reinstall removed circuit packs and repeat the procedure for the remaining circuit packs (except DS1s). If fuse blows after all circuit packs have been removed, trouble is in the backplane.

23. **STOP. YOU HAVE COMPLETED THIS PROCEDURE**.

24. **NOTE:**
Alarm may be caused by circuit packs inserted into the wrong slots.

Are circuit packs installed in the correct slots (**`rtrv-eqpt`**)?

If **YES**, proceed to **Step 27**.

If **NO**, continue with **Step 25**.

25. Remove circuit packs from wrong slots, check option switches (**DLP-513**) and reinstall circuit packs into the correct slots.

26. **STOP. YOU HAVE COMPLETED THIS PROCEDURE**.

27. **CAUTION:**
When removing circuit packs ensure that protection switching is available. Also, remove the circuit pack without the lighted **ACTIVE** *LED first.*

Check switch settings for correct settings. If the circuit pack has been replaced, check if settings are the same as they were before the circuit pack was replaced. Also check if the switches are set the same as the companion circuit pack.

Reference: **DLP-513**

28. Are switch settings correct?

    If **YES**, do **TAP-103**.

    If **NO**, continue with **Step 29**.

29. Change switch settings to the correct settings. (Use **`switch-ls`** command to switch to other circuit pack before removing pack.) If switch settings are to be changed from what they were previously, update the equipment list by momentarily depressing the **UPD/INIT** button on the **SYSCTL** after the circuit pack is reinstalled.

30. **STOP. YOU HAVE COMPLETED THIS PROCEDURE**.

31. Indications are that there is an unprotected failure or removal of an **OLIU** circuit pack at the far-end associated with the identified **OLIU** slot at the near-end. Determine location of the circuit pack(s) from office records or use the **`rtrv-crs-( )`** commands to trace back through the STS1/VT1.5 cross-connections associated with the identified **OLIU** slot.

32. If circuit packs are removed, determine the reason the circuit packs were removed. If the same circuit pack is to be reinserted and no switch settings are changed, reinstall the circuit pack. If the circuit pack was removed and switch settings changed, reinstall the circuit pack and momentarily depress the **UPD/INIT** button on the **SYSCTL** or use the **`upd`** command. If the circuit pack is not to be reinserted, momentarily depress the **UPD/INIT** button on the **SYSCTL** or use the **`upd`** command to remove the circuit pack from the inventory.

33. If the **OLIU** circuit packs has not been removed, replace the **OLIU** circuit pack associated with the identified **OLIU** slot in the alarm message.

    Reference: **DLP-523**

34. **STOP. YOU HAVE COMPLETED THIS PROCEDURE**.

35. In alarm report, is there any indication of **OLIU** or fiber trouble at near end or far end such as `inc. OC1 FERF`, `inc. OC3 FERF`, or `inc. OC12 FERF` alarm message?

    If **YES**, continue with **Step 36**.

    If **NO**, proceed to **Step 38**.

36. **NOTE:**
    If there is a DCC failure, a remote login to the shelf connected through the Source Address cannot be done. The **`rtrv-alm`**, **`rtrv-map-network`**, and **`rtrv-map-neighbor`** commands can be used to check for dcc failure for main. Also, use **`rtrv-fecom`** command to see if "fecom" has been disabled.

    Note `Source Address` of DCC channel failure. Check optical fibers connected through the `Source Address` per local procedures. If no trouble found, replace near-end **OLIU** first then far-end **OLIU**.

    Reference: **DLP-523**

37. **STOP. YOU HAVE COMPLETED THIS PROCEDURE**.

38. Use CIT and **`reset`** command to reset **SYSCTL** at the near end or unplug and reseat the **SYSCTL**.

39. Is the **FAULT** LED on the **SYSCTL** circuit pack still flashing (`section DCC channel failed`)?

    If **YES**, continue with **Step 40**.

    If **NO**, **STOP. YOU HAVE COMPLETED THIS PROCEDURE**.

40. If possible, use CIT and **`rlgn`** command to log in to the far- end terminal (**DLP-522**) and use the **`reset`** command to reset **SYSCTL** at the far end.

41. Is the **FAULT** LED on the **SYSCTL** circuit pack still flashing (`section DCC channel failed`)?

    If **YES**, continue with **Step 42**.

    If **NO**, **STOP. YOU HAVE COMPLETED THIS PROCEDURE**.

42. **NOTE:**
    You may prefer to go to the far end first and check if the **SYSCTL** is failed or removed before replacing the **SYSCTL** at the near end.

    Refer to **DLP-501** and replace **SYSCTL** at near-end terminal.

43. Is the **FAULT** LED on the **SYSCTL** circuit pack still flashing?

    If **YES**, continue with **Step 44**.

    If **NO**, **STOP. YOU HAVE COMPLETED THIS PROCEDURE**.

44. At far-end terminal, reset **SYSCTL** by unseating and reseating **SYSCTL** or by using a CIT and the **`reset`** command, if not already performed. If **FAULT** LED is still flashing after a reset, refer to **DLP-501** and replace **SYSCTL** at far-end terminal.

45. **STOP. YOU HAVE COMPLETED THIS PROCEDURE**.

46. Replace **OLIU**s at far end that are associated with the `Source Address` of the `inc. OC3 line AIS` or `inc. OC12 line AIS` alarm message.

    Reference: **DLP-523**

47. **STOP. YOU HAVE COMPLETED THIS PROCEDURE.**

48. Check far-end **TGS/TG3** option switches for proper line coding and frame format settings (**`rtrv-sync:`**). If no trouble found, check incoming timing reference signals. If timing reference signals are bad, issue trouble report of bad incoming timing reference signal(s). If no trouble found with timing references, replace far-end **TGS/TG3** circuit packs.

    Reference: **DLP-523**

49. **STOP. YOU HAVE COMPLETED THIS PROCEDURE**.

Clear Obscure Minor (MN) Alarm

1. Perform an LED test by depressing the **ACO** button or using the **`test-led:`** command from a CIT.

   Reference: **DLP-509**

2. Did any circuit pack fail the LED test?

   If **YES**, do **TAP-115**.
   If **NO**, continue with **Step 3**.

3. Is this site a remote terminal location with separate J1C182BA Power Shelf and/or fan unit?

   If **YES**, continue with **Step 4**.
   If **NO**, proceed to **Step 5**.

4. Look for blown fuses and/or lighted LEDs on the battery shelf, battery charger, or fan assembly. Is there any indication of trouble?

   If **YES**, do **TAP-114**.
   If **NO**, continue with **Step 5**.

5. Is a CIT available?

   If **YES**, proceed to **Step 11**.
   If **NO**, continue with **Step 6**.

6. **NOTE:**
   Unseating and reseating the **SYSCTL** performs a *reset* procedure which restarts the software program.

   Unseat and reseat **SYSCTL** circuit pack. Do not depress **UPD/INIT** button.

7. Is the **MN** alarm LED still lighted, after about 20 to 60 seconds?

   If **YES**, continue with **Step 8**.
   If **NO**, **STOP. YOU HAVE COMPLETED THIS PROCEDURE**.

8. **CAUTION:**
   Replacing the **SYSCTL** *involves updating the internal memory on the circuit pack.*

   Replace the **SYSCTL** (**DLP-501**).

9. Is **MN** alarm LED still lighted?

   If **YES**, continue with **Step 10**.
   If **NO**, **STOP. YOU HAVE COMPLETED THIS PROCEDURE**.

10. **NOTE:**
    Without a CIT it is difficult to determine the cause of the minor alarm. Table A lists some remaining possible causes of a minor alarm.

    Obtain a CIT and establish session with the DDM-2000 system.

    Reference: **DLP-521**

11. Use CIT and **`rtrv-alm:`** command to get an `Alarm and Status Report`. See the REPORT DESCRIPTIONS section of this manual under **RTRV-ALM** for a description of each message retrieved with the **`rtrv-alm:`** command.

12. Refer to Table A. Are any of the conditions listed in the `Description` column reported in the `Alarm and Status Report`?

    If **YES**, continue with **Step 13**.
    If **NO**, proceed to **Step 29**.

13. Refer to Table A. Note the suspected trouble and go to the indicated step or procedure.

Table A – Obscure Minor Alarm Conditions

Description	Meaning	Step
`APS - automatic lock`	Service associated with a **DS1**, **DS1PM**, or **T1EXT** circuit pack has been automatically switched and locked onto the protection **DS1**, **DS1PM**, or **T1EXT** circuit pack. The APS lock will remain active until midnight.	Step 14
`APS channel failed`	The APS channel on the protection OC-3 line has failed.	Step 17
`ExternalMinor`	DC power or fan failure at a remote terminal far end.	TAP-114
`environment`***n***	A miscellaneous discrete input is active. This message may be changed using the **`set-attr-env:`** command. The description may be an alphanumeric string up to 26 characters long (for example, Fire, Open door, etc.).	Step 19
`CP removed`	A circuit pack previously installed in the system is removed. The pack should be replaced or an update (**upd**) should be done to remove it from the equipment list.	Step 21
`unexpected CP type` `unexpected CP switches`	A circuit pack is installed in a slot provisioned for a different circuit pack, or switch settings have been changed from what they were before the circuit pack was removed.	Step 23
`protection CP different`	A circuit pack is installed in the protection slot that is different from the service circuit packs in a shelf configured for 1X7 low speed protection and will not protect the circuit packs in the service slots.	Step 26

14. **NOTE:**
There is an automatic lock. An automatic lock occurs when an *automatic* protection switch is made and then broken four times within a 10-minute interval.

From the `Alarm and Status Report`, determine the `Source Address` of the **DS1**, **DS1PM**, or **T1EXT** circuit pack locked onto the protection **DS1**, **DS1PM**, or **T1EXT**.

15. **CAUTION:**
    When a **DS1**, **DS1PM**, or **T1EXT** *is switched to protection, removal of any other* **DS1**, **DS1PM**, or **T1EXT** *circuit pack or* **177A** *Retainer Card in the same group will result in a loss of service to the protected* **DS1**, **DS1PM**, or **T1EXT** *and the removed* **DS1**, **DS1PM**, or **T1EXT** *circuit pack.*

    Replace **DS1**, **DS1PM**, or **T1EXT** service circuit pack locked onto protection.

    Reference: **DLP-523**

16. **STOP. YOU HAVE COMPLETED THIS PROCEDURE**.

17. **NOTE:**
    Indications are that the **OLIU** circuit pack on the protection line (slot **2(P)**) has failed at the near end or far end, or the receive fiber on the protection line at the near end has failed.

    Go to **TAP-111** and isolate trouble on the **OLIU**s.

18. **STOP. YOU HAVE COMPLETED THIS PROCEDURE**.

19. Use local procedures to clear condition(s) that caused environmental alarm.

20. **STOP. YOU HAVE COMPLETED THIS PROCEDURE**.

21. Locate `Source Address` of removed circuit pack from the `Alarm and Status Report` then determine the reason the **DDS1**, **DS1PM**, or **T1EXT** circuit pack was removed. If the same circuit pack is to be reinserted and no switch settings are changed, reinstall the circuit pack. If the circuit pack was removed and switch settings changed, reinstall the circuit pack and momentarily depress the **UPD/INIT** button on the **SYSCTL**. If the circuit pack is not to be reinserted, momentarily depress the **UPD/INIT** button on the **SYSCTL** to remove the circuit pack from the inventory.

22. **STOP. YOU HAVE COMPLETED THIS PROCEDURE**.

23. **NOTE:**
    Indications are that a circuit pack has been installed in a wrong slot; switch settings are invalid or different from a companion circuit pack; or switches are set differently from what they were before a circuit pack was replaced.

    Determine the `Source Address` from the `Alarm and Status Report`. Refer to the Commands and Reports section of this manual under **RTRV-ALM** for a more detailed description of the meaning of the report.

24. If a circuit pack(s) is installed in the wrong slot, remove the circuit pack. Determine correct position of the circuit pack and install circuit pack into the correct slot.

    Check circuit pack switch settings for valid settings or wrong settings (**DLP-513**). If switch settings are to be changed from what they were previously, update the equipment list by momentarily depressing the **UPD/INIT** button on the **SYSCTL** after the circuit pack is reinstalled.

25. **STOP. YOU HAVE COMPLETED THIS PROCEDURE**.

26. **NOTE:**
    Indications are that the circuit pack installed in the protection slot is different from the service circuit packs in a shelf configured for 1X7 low speed protection.

    Determine the `Source Address` from the `Alarm and Status Report`. Refer to the Commands and Reports section of this manual under **RTRV-ALM** for a more detailed description of the meaning of the report.

27. If this is acceptable execute the update (**upd**) command to clear the alarm. Otherwise, one or more of the low-speed service or protection circuit packs must be changed.

    Check circuit pack switch settings for valid settings or wrong settings (**DLP-513**). If switch settings are to be changed from what they were previously, update the equipment list by momentarily depressing the **UPD/INIT** button on the **SYSCTL** after the circuit pack is reinstalled.

28. **STOP. YOU HAVE COMPLETED THIS PROCEDURE**.

29. Has the **SYSCTL** been replaced?

    If **YES**, proceed to **Step 34**.
    If **NO**, continue with **Step 30**.

30. Use the CIT and **`reset`** command to reset **SYSCTL**.

31. Is the **MN** alarm LED still lighted after about 20 to 60 seconds?

    If **YES**, continue with **Step 32**.
    If **NO**, **STOP. YOU HAVE COMPLETED THIS PROCEDURE**.

32. **NOTE:**
    Replacing the **SYSCTL** involves updating the internal memory on the circuit pack.

    Replace the **SYSCTL** (**DLP-501**).

33. Is **MN** alarm LED still lighted?

    If **YES**, continue with **Step 34**.
    If **NO**, **STOP. YOU HAVE COMPLETED THIS PROCEDURE**.

34. **NOTE:**
    The problem appears to be in the backplane wiring of the DDM-2000 FiberReach shelf. One way to verify this is to swap the **SYSCTL** and any circuit pack with an inconsistent diagnostic indication with the corresponding circuit packs in another FiberReach shelf. If the problem moves with the circuit packs, it means that one or more of the circuit packs is defective. If the problem stays with the original FiberReach shelf, the entire assembly, but not the circuit packs, should be replaced. The FiberReach shelf has a printed backplane and cannot be repaired in the field.

    NOTE:
    If the **MN** LED is lighted and there is no **MN** alarm indication in the `Alarm and Status Report` after the reset is complete, do the LED test using the **`test-led`** command. Verify that the **MN** LED goes out during this test. If it does not, replace the User Panel.

    Check for broken or bent pins, shorted pins, etc. If you need technical assistance, notify your supervisor, your local technical support organization, or call Lucent Technologies RTAC, per local operating instructions.

35. **STOP. YOU HAVE COMPLETED THIS PROCEDURE**.

Clear External Minor Alarm at RT

1. Are there any blown fuses on battery shelf or **BFU** (for bulk powering)?

   If **YES**, continue with **Step 2**.

   If **NO**, proceed to **Step 4**.

2. Replace blown fuse(s).

3. Does alarm clear?

   If **YES**, **STOP. YOU HAVE COMPLETED THIS PROCEDURE**.

   If **NO**, continue with **Step 4**.

4. Is bulk power (J1C182BB bulk power shelf) being used?

   If **YES**, proceed to **Step 25**.

   If **NO**, continue with **Step 5**.

5. Is **OPEN BATT** LED on **337A BATTERY CHARGER** lighted at RT battery shelf?

   If **YES**, continue with **Step 6**.

   If **NO**, proceed to **Step 25**.

6. Condition DMM (digital multimeter) to measure voltage.

7. Measure voltage at **–48B** and **GND** and **–48L** and **GND** jacks on the **LDU** faceplate.

8. Does voltage measure between –42 and –58 volts?

   If **YES**, continue with **Step 9**.

   If **NO**, proceed to **Step 18**.

9. Use SD-7C119 to check wiring between **337A BATTERY CHARGER** and batteries.

10. Was a problem found in wiring?

    If **YES**, continue with **Step 11**.

    If **NO**, proceed to **Step 12**.

11. Correct wiring problem and proceed to **Step 17**.

12. Is fuse blown on **337A BATTERY CHARGER**?

    If **YES**, proceed to **Step 16**.

    If **NO**, continue with **Step 13**.

13. Is **BAT DISCHG** LED on **337A BATTERY CHARGER** lighted?

    If **YES**, continue with **Step 14**.

    If **NO**, proceed to **Step 16**.

14. Depress and hold **HIGH RATE CHG ACTIVATE** pushbutton on **337A BATTERY CHARGER**. Is **BAT DISCHG** LED lighted?

    If **YES**, continue with **Step 15**.

    If **NO**, proceed to **Step 16**.

15. **NOTE:**
    HIGH RATE CHG ON LED will remain lighted until batteries reach approximately –58 volts. If batteries are completely discharged, it may take approximately one day for **HIGH RATE CHG ON** LED to go out.

    Release **HIGH RATE CHG ACTIVATE** pushbutton. Does **BAT DISCHG** LED go off and is **HIGH RATE CHG ON** LED lighted?

    If **YES**, proceed to **Step 17**.

    If **NO**, continue with **Step 16**.

16. Replace **337A BATTERY CHARGER** and proceed to **Step 17**.

17. Did alarm clear?

    If **YES**, **STOP. YOU HAVE COMPLETED THIS PROCEDURE**.

    If **NO**, proceed to **Step 23**.

18. Use DMM to measure voltage at battery shelf jacks **J5 (+BAT)** and **J6 (–BAT)**.

19. Does voltage measure between –42 and –58 volts?

    If **YES**, proceed to **Step 37**.

    If **NO**, continue with **Step 20**.

20. Is **197A BATTERY LOAD TEST SET** available for use in testing batteries?

    If **YES**, continue with **Step 21**.

    If **NO**, proceed to **Step 23**.

21. Test batteries using **197A** test set.

    Reference: **DLP-532**

22. Replace any failed battery pack(s) and reconnect battery leads to battery shelf and proceed to **Step 24**.

23. Replace battery packs one at a time until –48 volts is present at output jacks on battery shelf.

24. Does alarm clear?

    If **YES**, **STOP. YOU HAVE COMPLETED THIS PROCEDURE**.

    If **NO**, continue with **Step 25**.

25. Is **FAN ALARM** LED lighted on a fan assembly?

    If **YES**, continue with **Step 26**.

    If **NO**, proceed to **Step 37**.

26. Remove **FAN H** and **FAN L** fuses on corresponding **BFU** on power shelf. Are fuses blown?

    If **YES**, continue with **Step 27**.

    If **NO**, proceed to **Step 30**.

27. Replace **FAN H** and **FAN L** fuses on corresponding BFU.

28. Does alarm clear?

    If **YES**, **STOP. YOU HAVE COMPLETED THIS PROCEDURE**.

    If **NO**, continue with **Step 29**.

29. Is **FAN ALARM** LED lighted on fan assembly?

    If **YES**, continue with **Step 30**.

    If **NO**, proceed to **Step 37**.

30. ⚠ **WARNING:**
    To avoid possible damage, do not overextend fan assembly power cable.

    Remove fan assembly from bay.

31. Examine fan assembly for anything that will prevent fan from operating properly.

32. Remove any blockages and reinstall fan assembly and fuses.

33. Is fan assembly **FAN ALARM** LED off?

    If **YES**, **STOP. YOU HAVE COMPLETED THIS PROCEDURE**.

    If **NO**, continue with **Step 34**.

34. Remove **FAN H** and **FAN L** fuses on corresponding **BFU**.

35. Replace fan assembly with new fan assembly and install fuses.

36. Is fan assembly **FAN ALARM** LED off?

    If **YES**, **STOP. YOU HAVE COMPLETED THIS PROCEDURE**.

    If **NO**, continue with **Step 37**.

37. Replace one of the **336 RECTIFIER**s.

38. Does alarm clear?

    If **YES**, **STOP. YOU HAVE COMPLETED THIS PROCEDURE**.

    If **NO**, continue with **Step 39**.

39. Reinstall original **336A RECTIFIER**.

40. Replace second **336A RECTIFIER**.

41. Does alarm clear?

    If **YES**, **STOP. YOU HAVE COMPLETED THIS PROCEDURE**.

    If **NO**, continue with **Step 42**.

42. Reinstall original **336A RECTIFIER**.

43. If you need technical assistance, notify your supervisor, your local technical support organization, or call Lucent Technologies RTAC, per local operating instructions.

44. **STOP. YOU HAVE COMPLETED THIS PROCEDURE**.

Clear LED Test Trouble

1. Did all of the LEDs in the **FiberReach** fail to light?

   If **YES**, proceed to **Step 4**.

   If **NO**, continue with **Step 2**.

2. **CAUTION:**
   Replacement circuit packs may have option switches which must be properly set before the circuit pack is installed.

   Refer to **DLP-523** and replace the circuit pack that failed the LED test. Repeat the LED test.

3. Did the same LED fail the test again?

   If **YES**, continue with **Step 4**.

   If **NO**, **STOP. YOU HAVE COMPLETED THIS PROCEDURE**.

4. **NOTE:**
   Using the CIT and `reset` command or unseating and reseating the **SYSCTL** restarts the software program.

   Enter `reset` command or unseat and reseat **SYSCTL** circuit pack. Do not depress **UPD/INIT** button.

5. Repeat the LED test.

6. Did the same LED(s) fail the test again?

   If **YES**, continue with **Step 7**.

   If **NO**, **STOP. YOU HAVE COMPLETED THIS PROCEDURE**.

7. **CAUTION:**
   Replacing the **SYSCTL** *involves updating the internal memory on the circuit pack.*

   Replace the **SYSCTL** (**DLP-501**) and repeat the LED test.

8. Did the LED test fail again?

   If **YES**, continue with **Step 9**.

   If **NO**, **STOP. YOU HAVE COMPLETED THIS PROCEDURE**.

9. **NOTE:**
   The problem appears to be in the backplane wiring of the FiberReach. One way to verify this is to swap the **SYSCTL** and any circuit pack with an inconsistent diagnostic indication with the corresponding circuit packs in another FiberReach. If the problem moves with the circuit packs, it means that one or more of the circuit packs is defective. If the problem stays with the original FiberReach the entire assembly, but not the circuit packs, should be replaced. The FiberReach has a printed backplane and cannot be repaired in the field.

   If you need technical assistance, notify your supervisor, your local technical support organization, or call Lucent Technologies RTAC, per local operating instructions.

10. **STOP. YOU HAVE COMPLETED THIS PROCEDURE**.

Clear Trouble During Network Element Program Upgrade

1. **NOTE:**
   Program installation may fail due to failure of communication link between PC and DDM-2000, failure of the floppy disk or hard disk on the PC, failure or loss of power in the PC, or failure of the **SYSCTL**. See **`ins-prog:`** and **`cpy-prog:`** command pages in the Commands and Reports section of Volume 1 of this manual for other failure indications.

   Was the following message received?
   ```
   SCSN
   /* Status, invalid Command SequeNce. */
   /* Incompatible software.*/
   ```

   If **YES**, continue with **Step 2**.
   If **NO**, proceed to **Step 4**.

2. Indications are that you are trying to download software that is incompatible with the shelf type (for example, DDM-2000 OC-3 software into a DDM-2000 FiberReach shelf). Find compatible software.

   If you need assistance, notify your supervisor, your local technical support organization, or call Lucent Technologies RTAC, per local operating instructions.

3. **STOP. YOU HAVE COMPLETED THIS PROCEDURE**.

4. Was the following message received?
   ```
   /* Status, execution stopped. */
   /* Communication link could not be established.
   Please connect PC with program to be installed and start
   again. */
   ```

   If **YES**, continue with **Step 5**.
   If **NO**, proceed to **Step 6**.

5. Indications are that the **`ins-prog:`**`tid or` command was not executed from a PC. A program upgrade to the near end DDM-2000 cannot be performed with a CIT. Use PC to repeat software download.

6. Was the following message received?
```
/* Status, execution stopped. */
/* Communication link cannot be established.
Please connect PC with DDM-2000 upgrade program and start
again. */
```

   If **YES**, continue with **Step 7**.
   If **NO**, proceed to **Step 8**.

7. Indications are that the PC is not functioning properly, the disk drive is inoperable, the diskette has been removed, or the program has previously been erased from the **SYSCTL**. Check that the PC is operating properly and the diskette has not been removed. Check PC to CIT port connections.

   Has program installation procedure been tried more than once?

   If **YES**, continue with **Step 8**.
   If **NO**, proceed to **Step 15**.

8. Was the following or similar message received?
```
ins-prog:tid DENY
  SSTP
  /* Status, execution stopped. */
  /* Far end not responding.
```

   If **YES**, continue with **Step 9**.
   If **NO**, proceed to **Step 12**.

9. Is **SYSCTL** circuit pack installed at far end?

   If **YES**, proceed to **Step 12**.
   If **NO**, continue with **Step 10**.

10. Determine reason **SYSCTL** is not installed. The **SYSCTL** must be installed to upgrade program. Reinstall the **SYSCTL** and repeat the program installation procedure.

11. **STOP. YOU HAVE COMPLETED THIS PROCEDURE**.

12. Did **SYSCTL** fail, indicated by the following or similar **SYSCTL** CP failed message?

```
ins-prog:tid DENY
  SSTP
  /*Status, execution stopped.*/
  /*Installation cannot be done because of SYSCTL test
  failure. */
```

    If **YES**, proceed to **Step 17**.
    If **NO**, continue with **Step 13**.

13. Did **FAULT** LED on **SYSCTL** light and did the **SYSCTL FE ID** display go off?

    If **YES**, proceed to **Step 19**.
    If **NO**, continue with **Step 14**.

14. **NOTE:**
    It is assumed that the program installation failed in one of two ways: before the old program was erased or after the old program was erased. If the program installation failed after 1 minute, the DDM-2000 may have erased its old program and will be unable to report alarms or do protection switches. If program installation failed within 1 minute, the old program may not have been erased and the DDM-2000 may have automatically reset and restarted its old program. A new attempt must be made to install the program.

    Check PC COM( ) port to CIT connection. Check PC disk drive and floppy diskette.

15. **NOTE:**
The new program installation may have failed because of faulty diskettes.

Disconnect PC and repeat program installation procedure. Use your *backup diskettes* containing new generic program, if available. If new program installation cannot be completed and the old program has been erased, one the following procedures may be used to restore the old program or install a different version program.

A. If a "**P.**" was displayed in the **FE ID** display during a software download, indications are that a portion of the program has been erased and you will have to reinstall the program. You may be able to use the **`ins-prog:`**`tid` or **`cpy-prog:`**`tid` command from a far-end shelf to reload software. Go to the far-end shelf and establish session with a CIT. Enter the **`ins-prog:`**`tid` or **`cpy-prog:`**`tid` command where the `tid` is the `tid` (shelf name) for the failed shelf where you want to install the old program.

B. If a "**P.**" was displayed in the **FE ID** display during a software download and you cannot load the program from the far-end, you can force the download. To load another version of software, unseat and then reseat the **SYSCTL** and immediately push and hold the **FE SEL** and **UPD/INIT** buttons at the same time until a "**P**" appears in the **FE ID** display. Release buttons and repeat the download procedure.

C. Replace the **SYSCTL** with ones that have compatible software. [**DLP-523**]

D. If a "**C**" was displayed in the **FE ID** display after a software download, indications are that the software loaded will not support the current system transmission configuration. This indicates a problem with the version of software you are trying to install, or you are trying to install a version of software that does not support the system configuration that you have. To load another version of software, unseat and then reseat the **SYSCTL** and immediately push and hold the **FE SEL** and **UPD/INIT** buttons at the same time until a "**P**" appears in the **FE ID** display. Release buttons and repeat the download procedure.

If you need technical assistance, notify your supervisor, your local technical support organization, or call Lucent Technologies RTAC, per local operating instructions.

16. **STOP. YOU HAVE COMPLETED THIS PROCEDURE**.

17. Unseat and reseat **SYSCTL** to perform reset.

18. Is alarm still present?

    If **YES**, continue with **Step 19**.
    If **NO**, proceed to **Step 21**.

19. Has **SYSCTL** been replaced?

    If **NO**, continue with **Step 20**.
    If **YES**, proceed to **Step 23**.

20. ⚠ **CAUTION:**
    Replacing the **SYSCTL** *involves updating the internal memory on the circuit pack.*

    Replace the **SYSCTL**.

    Reference: **DLP-523**

21. Repeat program installation procedure.

    Reference: **DLP-536**

22. **STOP. YOU HAVE COMPLETED THIS PROCEDURE**.

23. If you need technical assistance, notify your supervisor, your local technical support organization, or call Lucent Technologies RTAC, per local operating instructions.

24. **STOP. YOU HAVE COMPLETED THIS PROCEDURE**.

Clear NE ACTY Alarm Only

1. Connect the CIT to the **CIT** connector on the near-end User Panel and log in to the near-end system.

   Reference: **DLP-521**

2. **NOTE:**
   The **`rtrv-alm`** command can be used to display a report of active alarm and status conditions. The Commands and Reports section in Volume I of this manual gives a description of the command.

   NOTE:
   The `Active Alarm and Status Report` is output automatically following CIT log in. The report shown in Figure 1 is an example that shows one entry. There may be many entries in the actual report.

   Note the information in the `Source Address` and `Description` columns for the top entry/entries above the first single-dashed line in the `Active Alarm and Status Report` (Figure 1) (for example, "`ne-acty m2-1-1-1 MM-DD HH:MM:SS nsa inc. VT AIS`").

```
*Active Alarms and Status Report
================================================================
Alarm      Source     Date       Time        Srv   Description
Level      Address          Detected
================================================================
ne-acty    m2-1-1-1   MM-DD      HH:MM:SS    nsa   inc. VT AIS
----------------------------------------------------------------

*/
```

Figure 1 – Example of Active Alarms and Status Report

3. **NOTE:**
   Local alarm or status conditions have a Source Address of the local slot, line, port, channel, path, cross-connection, or operations interface (DCC, CIT, X.25, etc.) where the event occurred. (See *Addresses* in the Commands and Reports section of this manual.) Use the **`rtrv-alm`** command to get another report, if necessary.

   Note the trouble indication in the `Description` column of the `Active Alarm and Status Report`.

4. Find the trouble description in Table A and perform the indicated repair procedure(s).

5. **STOP. YOU HAVE COMPLETED THIS PROCEDURE.**

Table A – Alarm and Status — NE ACTY

Activity	Meaning
`holdover mode active`	System is in holdover synchronization mode. **Likely causes:** A. Manual switch to holdover mode (with the **`switch-sync`** command) and the switch has not been reset. B. Automatic switch to holdover mode due to failure of timing references as follows: a. The reference failures have not cleared. b. The system is provisioned for nonrevertive synchronization mode switching. c. The system is provisioned for line-timed operation and the optical line or OLIU CP has failed, or a message indicating an upstream clock problem has been received on the sync message bits of the optical line. (See the **`rtrv-sync`** command). d. The system is provisioned for sync message signaling, but the upstream system from which it line times has not been provisioned for sync message signaling. The condition can be cleared by provisioning both systems the same. (See the **`set-sync`** and **`rtrv-sync`** commands.) The condition can be cleared by repairing at least one of the timing references (if both are failed) and resetting synchronization mode protection switch with the command **`switch-sync:s=mode,pri=reset`**.
`inc. (from fiber) DS3 AIS`	The system has detected DS3 AIS in the DEMUX direction (coming from the fiber) for the specified DS3 signal. **Likely causes:** The incoming DS3 signal at the far end has failed, DS3 AIS is received from the DSX-3 at the far end, or incomplete or missing STS-1 (DS3) cross-connections at a far end terminal. Check incoming DS3 signal at far end and/or look for missing cross-connections [**TAP-118**].
`inc. (from fiber) DS3 OOF`	The system detects a DS3 out-of-frame condition in DEMUX direction (coming from fiber) for the specified DS3 signal. This condition is reported only if the DS3 interface is provisioned is VM or VMR mode. See **`set-t3`** or **`rtrv-t3`** commands. **Likely causes:** An OOF DS3 signal incoming to the DSX-3 at the far end; or failure of **DS3** circuit pack at near or far end; the DS3 signal is looped at both ends. If no trouble with DSX-3 signal, replace **DS3** circuit pack [**DLP-523**].

Table A – Alarm and Status — NE ACTY (Continued)

Activity	Meaning
`inc. OC1 FERF`	System detects the OC-1 far end receive failure (FERF) signal in the incoming OC-1 signal. **Likely causes:** The far end has detected an incoming signal failure on the specified OC-1 line. This may be caused by failure of the **OLIU** circuit pack at the near end, the **OLIU** circuit pack at the far end, or the transmit fiber on the specified line [**TAP-111**].
`inc. OC3 FERF`	System detects the OC-3 far end receive failure (FERF) signal in the incoming OC-3 signal. **Likely causes:** The far end has detected an incoming signal failure on the specified OC-3 line. This may be caused by failure of the **OLIU** circuit pack at the near end, the **OLIU** circuit pack at the far end, or the transmit fiber on the specified line [**TAP-111**].
`inc. OC12 FERF`	The system detects the OC-12 far end receive failure (FERF) signal in the incoming OC-12 signal. **Likely causes**: The far end has detected an incoming signal failure on the specified OC-12 line. This may be caused by failure of the **OLIU** circuit pack at the near end, the **OLIU** circuit pack at the far end, or the transmit fiber on the specified line [**TAP-111**].
`inc. OC1 line AIS`	System has detected OC-1 line alarm indication (AIS) signal on an incoming OC-1 line. **Likely cause:** Failure of **OLIU** circuit pack at far end [**TAP-111**].
`inc. STS1 yellow`	System detects an incoming STS-1 yellow signal inserted by the far end path terminating equipment. **Likely causes:** Incomplete or incorrect cross-connect provisioning in the end-to-end network [**TAP-111**], or unprotected unidirectional failure of the **OLIU** circuit pack or fiber at some point in the end-to-end path.
`inc. VT yellow`	The far end is detecting VT AIS or VT LOP and inserting VT yellow in its transmit signal. **Likely causes:** Unprotected unidirectional failure of a circuit pack or fiber at some point in the end-to-end path.

Clear STS/VT AIS Alarm Conditions

1. **NOTE:**
   Incoming VT and/or STS1 AIS often indicates missing or incorrect cross-connects. In ring configurations they may have an alarm level of `ne-acty`, MJ or CR. Incoming STS1 AIS may also indicate an unprotected failure or removal of a **DS3**, **MXRVO**, **STS1E** or **OLIU** at the far end associated with the Source Address of the alarm message. Incoming VT AIS may indicate an unprotected failure or removal of a **DS1**, **T1EXT**, or **OLIU** failures in ring applications.

   NOTE:
   VT and STS1 AIS conditions are only reported at service termination (drop) points. Incoming VT and/or STS AIS reported as `ne-acty` at a shelf where the service is cross-connected to a DS1 or DS3 drop can be caused by missing or incorrect cross-connections at the other terminal shelf or at any shelves where the service should be pass-through cross-connected.

   NOTE:
   An STS1 may contain only one VT, when dropped causes an `inc. STS1 AIS` since it is the only one connected in the STS1.

   Does the alarm and status report indicate incoming VT AIS or STS1 AIS (`inc. VT AIS` or `inc. STS1 AIS`)?

   If **STS1 AIS**, continue with **Step 2**.
   If **VT AIS**, proceed to **Step 12**.

2. Note the `Source Address` of the STS1 AIS condition reported in the alarm and status report (for example, `m-1`). Based on the circuit layout or other office records, determine the other shelf where that time slot is supposed to be terminated (cross-connected to a DS1, DS3, or EC-1 termination).

3. Use the **`rlgn`** command, if possible, or have the central maintenance center login to the other terminating shelf, then use the **`rtrv-crs-sts1:`** command to determine if the time slot identified in **Step 2** is cross-connected as specified in circuit layout or other office records.

4. Were there incomplete or incorrect cross-connects?

   If **YES**, continue with **Step 5**.
   If **NO**, proceed to **Step 7**.

5. Use the commands **`ent-crs-sts1:`** and **`dlt-crs-sts1:`**, as necessary, to correct the provisioning.

6. Have all indications of STS1 AIS cleared?

   If **YES**, **STOP. YOU HAVE COMPLETED THIS PROCEDURE**.
   If **NO**, continue with **Step 7**.

7. **NOTE:**
   If the service is STS1 cross-connected at either terminating shelf, both terminating shelves must be properly equipped to terminate the entire STS1.

   Use the **`rtrv-eqpt:`** command at both shelves to verify that the shelves are properly equipped for the service being provided. If the shelves are not properly equipped, install circuit packs as required.

8. Have all indications of STS1 AIS cleared?

   If **YES**, **STOP. YOU HAVE COMPLETED THIS PROCEDURE**.
   If **NO**, continue with **Step 9**.

9. Using the **`rlgn`** command, where possible, or have the central maintenance center login to every shelf where the service should be pass-through cross-connected (for example, m-1 to c-1) and use the **`rtrv-crs-sts1:`** command to determine if the time slot identified in **Step 2** is cross-connected as specified in circuit layout or other office records. If service is cross-connected through other maintenance subnetworks, such as dual ring interworking (DRI), look for missing cross-connections in the other subnetworks.

10. At any shelves with missing cross-connects use the **`ent-crs-sts1:`** command to provision the pass-through cross-connect (for example, m-1 to c-1).

11. **STOP. YOU HAVE COMPLETED THIS PROCEDURE**.

12. Note the `Source Address` of the VT AIS condition reported in the alarm and status report (for example, `m-1-1-1`). Based on the circuit layout or other office records, determine the other shelf where that time slot is supposed to be terminated (cross-connected to a DS1 or EC-1 termination).

13. Use the **`rlgn`** command, if possible, or have the central maintenance center login to the other terminal shelf, then use the **`rtrv-crs-sts1:`** and **`rtrv-crs-vt:`** commands to determine if the time slot identified in **Step 12** is cross-connected as specified in circuit layout or other office records.

14. Were there incomplete or incorrect cross-connects?

    If **YES**, continue with **Step 15**.
    If **NO**, proceed to **Step 17**.

15. Use the commands **`ent-crs-( )`** and **`dlt-crs-( )`**, as necessary. to correct the provisioning.

16. Have all indications of VT AIS cleared?

    If **YES**, **STOP. YOU HAVE COMPLETED THIS PROCEDURE**.
    If **NO**, continue with **Step 17**.

17. **NOTE:**
    If the service is STS1 cross-connected at either terminating shelf, both terminating shelves must be equipped to terminate the entire STS1.

    Use the **`rtrv-state-eqpt:`** command at both shelves to verify that the shelves are properly equipped for the service being provided. If the shelves are not properly equipped, install circuit packs as required.

18. Have all indications of VT AIS cleared?

    If **YES**, **STOP. YOU HAVE COMPLETED THIS PROCEDURE**.
    If **NO**, continue with **Step 19**.

19. Use the **`rlgn`** command, if possible, or have the central maintenance center login to a shelf where the service should be pass-through cross-connected (for example, m-1-1-1 to c-1-1-1). Use the **`rtrv-crs-( )`** command to determine if the time slot identified in **Step 12** is cross-connected as specified in circuit layout or other office records. If service is cross-connected through other maintenance subnetworks, such as dual ring interworking (DRI), look for missing cross-connections in the other subnetworks.

20. Are there any missing cross-connects?

    If **YES**, continue with **Step 21**.
    If **NO**, proceed to **Step 24**.

21. At any shelves with missing cross-connects use **`ent-crs-( )`** to provision the pass-through cross-connect.

22. Use the **`rtrv-alm:`** command to see if alarms have cleared.

23. Did alarms clear?

    If **YES**, **STOP. YOU HAVE COMPLETED THIS PROCEDURE**.
    If **NO**, continue with **Step 24**.

24. Repeat this procedure from **Step 19** to look for other missing cross-connections.

Clear Brownout Condition
Flashing L in FE ID Display

1. Is fuse **FA** or **FB** blown?

   If **YES**, do **DLP-511**.

   If **NO**, proceed to **Step 2.**

2. Condition DMM (digital multimeter) to measure voltage.

3. ⚠ **CAUTION:**
   If fuse on User Panel is not blown, trouble may be a failure of **one** *of the -48V DC power feeders. Removing the wrong fuse or disconnecting the wrong feeder for power measurement will cause service interruption.*

   Measure voltage at fuse holder **FA** or **FB**.

4. Does voltage measure less than -40 volts DC?

   If **YES**, continue with **Step 5**.

   If **NO**, proceed to **Step 7**.

5. ⚠ **CAUTION:**
   During brownout conditions the **SYSCTL** *will suspend normal operations. No alarms will be gererated and CIT commands will not work. Local and remote logins will* **not** *work.*

   Trouble in power feeder(s). Check office battery distribution panel for low-voltage condition.

6. **STOP. YOU HAVE COMPLETED THIS PROCEDURE**.

7. Is shelf equipped with **BBG8** or **BBG8B SYSCTL** circuit pack?

   If **BBG8**, continue with **Step 8**.

   If **BBG8B**, proceed to **Step 11**.

8. Are frame ground and battery return feeders at the same potential?

   If **NO**, continue with **Step 9**.

   If **YES**, proceed to **Step 11**.

9. Trouble in frame ground or battery return. Frame ground and battery return should be at about the same potential (traceable to the same source). Find and correct problem.

10. **STOP. YOU HAVE COMPLETED THIS PROCEDURE.**

11. **NOTE:**
    Unseating and reseating **SYSCTL** circuit pack performs a **reset** procedure which restarts the software program.

    Unseat and reseat **SYSCTL** ciruit pack or use reset command. Do not press **UPD/INIT** pushbutton.

12. Is trouble cleared?

    If **YES**, **STOP. YOU HAVE COMPLETED THIS PROCEDURE**.

    If **NO**, proceed to **Step 9**.

13. **CAUTION:**
    Replacing the **SYSCTL** *involves updating the internal memory on the circuit pack.*

    Replace the **SYSCTL** (**DLP-501**).

14. **STOP. YOU HAVE COMPLETED THIS PROCEDURE**.

Enable or Disable System Security and/or Edit Delete, or Enter a User's Login

1. **CAUTION:**
   You must wear an ESD wrist strap plugged into one of the grounding jacks (located on both sides of the assembly) whenever working with the DDM-2000 FiberReach.

   Connect CIT to the desired shelf and establish session.

   Reference: **DLP-521**

2. Are you going to enable or disable system security or are you going to edit, delete, or enter a user's login?

   If **Enable or Disable System Security**, continue with **Step 3**.
   If **Edit, Delete, or Enter a User's Login**, proceed to **Step 15**.

3. **NOTE:**
   You must be logged into the system as one of the three privileged users to enable or disable system security. Initially, the defaults for the privileged user logins (Release 2.1 and later) are LUC01 (upper case LUC-zero-one), LUC02 (upper case LUC-zero-two), and LUC03 (upper case LUC-zero-three); however, these defaults may have been changed. For Release 2.0 and earlier, the defaults for the privileged user logins are ATT01 (upper case ATT-zero-one), ATT02 (upper case ATT-zero-two), and ATT03 (upper case ATT-zero-three). The CIT login banner for Release 2.0 and earlier reads: `AT&T`, `DDM-2000 FiberReach, Release a.b.c.`

   NOTE:
   System security requires the defaults for the privileged user logins/password to be changed and CIT and/or DCC port security to be enabled.

   At the `login<` prompt, enter a valid privileged user login (provided by your DDM-2000 administrator).

   Response: `password<`

4. **NOTE:**
Check with the DDM-2000 administrator to determine what the default privileged password is set to.

NOTE:
Passwords are not displayed on the CIT.

At the `password<` prompt, enter a valid privileged user password (provided by your DDM-2000 administrator).

Response: CIT prints the following message followed by an Alarm and Status Report:

```
/***********************************
*                                  *
*                                  *
*        Lucent Technologies       *
*        DDM-2000 FiberReach       *
*                                  *
*           Release a.b.c          *
*                                  *
*                                  *
***********************************/

                    .

                    .

                    .

   TID date time
M  rtrv-alm: all COMPLD
   /* Active Alarms and Status Report
```

5. **NOTE:**
After the prompt (<), the system will respond to commands entered. The **`set-link:pg=( )`** command may be used to set the vertical size of the displayed page on the CIT. Page (**pg**) length may be set from 3 to 150 lines with a default length of 24 lines.

Did you use the default privileged user login (LUC01, LUC02, or LUC03) and password to log into the system?

If **YES**, continue with **Step 6**.
If **NO**, proceed to **Step 8**.

6. **NOTE:**
The defaults for privileged user logins (LUC01, LUC02, and LUC03) and password must be changed for system security. There are always three privileged user logins. (Privileged user logins cannot be added or deleted.) See the "Commands and Reports" section of this manual for a description of the **`set-lgn:`** command format.

Use the **`set-lgn:`** command to change the defaults for the privileged user logins (LUC01, LUC02, and LUC03) and password.

7. **NOTE:**
The **`rtrv-lgn:`** command retrieves the `Login Provisioning Report`. This report lists each user's login and authorization level (user type). The report does not contain passwords. See the "Commands and Reports" section of this manual for a description of the **`rtrv-lgn:`** command format.

Use the **`rtrv-lgn:`** command to obtain the `Login Provisioning Report` and verify that the privileged user logins have been changed.

8. **NOTE:**
The **`rtrv-secu:`** command retrieves the `Port Security Configuration Report`. This report provides CIT and DCC port security and timeout information. See the "Commands and Reports" section of this manual for a description of the **`rtrv-secu:`** command format.

Use the **`rtrv-secu:`** command to obtain the `Port Security Configuration Report` and note the CIT/DCC port security and timeout information.

9. **NOTE:**
   The **`set-secu:`** command enables or disables security on each CIT and DCC interface using one or more CIT and/or DCC port addresses [`dcc-all or cit-1`]. This command is also used to specify the timeout period for each port address. The timeout period is the time, in minutes, before an inactive session is automatically terminated. See the "Commands and Reports" section of this manual for a description of the command format. For example, **`set-secu:cit-1:sec=enabled`** enables security on the front CIT port.

   NOTE:
   When security is enabled for a CIT or DCC port address, a valid login and password must be entered by all users to access the system through that port. When security is in lockout state, only a privileged user can access the system through the locked out CIT/DCC port.

   NOTE:
   For applications that have a remote terminal located on a customer premise site, you may want to disable security on the DCC interface at the remote terminal. This allows the user at the terminal in the central office to login remotely (via the DCC) to the remote terminal without a login/password. At the terminal in the central office, you may want to enable security on the DCC. This means that a user at the remote terminal must have a valid login/password to login remotely (via the DCC) to the terminal at the central office.

   Use the **`set-secu:`** command to enable or disable security on each CIT and/or DCC port and specify the corresponding timeout period, as required.

10. Use the **`rtrv-secu:`** command to obtain the `Port Security Configuration Report` and verify the security and timeout information for the CIT and/or DCC ports.

11. **NOTE:**
There are four types of users:

Privileged users may execute any command, including restricted commands.

General users may execute any commands that are not restricted to privileged users.

Maintenance users may execute commands that obtain nonprivileged system reports, perform protection switching, loopback activities, and perform some other maintenance activities.

Reports-only users may only execute commands that obtain nonprivileged system reports.

Refer to *Security* in the "Administration and Provisioning" section of this manual for more information about restricted commands.

NOTE:
Three privileged and up to one hundred nonprivileged (general and/or reports-only) logins are supported. If a user attempts to enter another login when the maximum supported logins already exist, the command will be denied. See the "Commands and Reports" section of this manual for a description of the **`set-lgn:`** command format.

Use the **`set-lgn:`** command to enter, edit, or delete nonprivileged (general and/or reports-only) logins/passwords and user types, as required.

12. Use the **`rtrv-lgn:`** command to obtain the `Login Provisioning Report` and verify the nonprivileged user logins and user types.

13. See the "Commands and Reports" section of this manual for descriptions of related security commands: **`set-passwd`**, **`rtrv-lgn`**, and **`rtrv-secu`**.

14. **STOP. YOU HAVE COMPLETED THIS PROCEDURE.**

15. **NOTE:**
You must be logged into the system as one of the three privileged users to edit, delete, or enter a user's login. Initially, the defaults for the privileged user logins are LUC01 (upper case LUC-zero-one), LUC02 (upper case LUC-zero-two), and LUC03 (upper case LUC-zero-three); however, these defaults may have been changed.

At the `login<` prompt, enter a valid privileged user login (provided by your DDM-2000 administrator).

Response: `password<`

16. **NOTE:**
Check with the DDM-2000 administrator to determine what the default privileged password is set to.

NOTE:
Passwords are not displayed on the CIT.

At the `password<` prompt, enter a valid password (provided by your DDM-2000 administrator).

Response: CIT prints the following message followed by an Alarm and Status Report:

```
/***********************************
*                                  *
*                                  *
*        Lucent Technologies       *
*        DDM-2000 FiberReach       *
*                                  *
*                                  *
*           Release a.b.c          *
*                                  *
*                                  *
***********************************/

                    .

                    .

                    .

   TID date time
M  rtrv-alm: all COMPLD
   /* Active Alarms and Status Report
```

17. **NOTE:**
After the prompt (<), the system will respond to commands entered. The **`set-link:pg=( )`** command may be used to set the vertical size of the displayed page on the CIT. Page (**`pg`**) length may be set from 3 to 150 lines with a default length of 24 lines.

NOTE:
There are four types of users:

Privileged users may execute any command, including restricted commands.

General users may execute any commands that are not restricted to privileged users.

Maintenance users may execute commands that obtain nonprivileged system reports, perform protection switching, loopback activities, and perform some other maintenance activities.

Reports-only users may only execute commands that obtain nonprivileged system reports.

Refer to *Security* in the "Administration and Provisioning" section of this manual for more information about restricted commands.

NOTE:
Three privileged and up to 100 nonprivileged (general and/or reports-only) logins are supported. If a user attempts to enter another login when the maximum supported logins already exist, the command will be denied.

NOTE:
The three privileged user logins may be edited to change the login name and/or password, but privileged user logins cannot be added or deleted. See the "Commands and Reports" section of this manual for a description of the **`set-lgn:`** command format.

Use the **`set-lgn:`** command to edit, delete, or enter logins/passwords and user types, as required.

18. **NOTE:**
    The **`rtrv-lgn:`** command retrieves the `Login Provisioning Report`. This report lists each user's login and authorization level (user type). The report does not contain passwords. See the "Commands and Reports" section of this manual for a description of the **`rtrv-lgn:`** command format.

    Use the **`rtrv-lgn:`** command to obtain the `Login Provisioning Report` and verify the user logins and user types.

19. **NOTE:**
    Setting logins/passwords does not set system security. In addition to assigning valid logins/passwords, CIT and/or DCC port security must be enabled to secure a system.

    Repeat this procedure to enable system security, if required.

20. See the "Commands and Reports" section of this manual for descriptions of related security commands: **`set-passwd`**, **`rtrv-lgn`**, and **`rtrv-secu`**.

21. **STOP. YOU HAVE COMPLETED THIS PROCEDURE.**

Replace BBG8/BBG8B SYSCTL In Service

This procedure is used for replacing a **BBG8/BBG8B SYSCTL** in an in-service shelf. For procedures to install the **SYSCTL** in a new shelf (initial installation), refer to **DLP-539**.

1. **CAUTION:**
   Transmission configuration information for in-service systems is stored on the **26-Type OLIU** *circuit pack in* **MAIN** *slot* **1**. *In some instances (for example, during some upgrades, system tests, or training classes), if the system is in service and a version of software is being installed that is not compatible with the current transmission configuration, it may be necessary to remove the* **OLIU** *circuit pack in* **MAIN** *slot* **1** *to force the system to run the software you are trying to download. If both* **OLIU** *circuit packs are not installed, removal of the only* **OLIU** *circuit pack will cause service interruption.*

   NOTE:
   The following step is recommended to protect against a loss of service because of inadvertently loading incompatible software. But, if you are **sure** that you want to load incompatible software, you may elect to remove the **OLIU** in **MAIN** slot **1** and allow the software to download without having to force the system to run the software.

   Before performing this procedure, it is strongly suggested that both **OLIU** circuit packs be installed in the shelf and the **`rtrv-state-path:`**, **`rtrv-state-eqpt:`**, and **`rtrv-sync:`** commands be used **at both ends** of the optical line to verify that the **MAIN-2 OLIU** circuit pack is the *Active* transmission path and *Reference/Line*. If the **MAIN-2 OLIU** is not active, use the **`switch-path-vt1:m1-1-all,pri=manual`** command and **`switch-sync:s=`*`src`*`,pri=manual`** command to switch traffic and timing reference to the **MAIN-2 OLIU** circuit pack.

2. Remove **SYSCTL** being replaced and inspect option switch settings. Option switches on the replacement **BBG8/BBG8B SYSCTL** are set the same as the original.

3. Set all **SYSCTL** switch **S1**sections **S1-1**, **S1-2**, and **S1-3** to **OFF** to set the product (shelf) type. See Figure 1.

4. Set **SYSCTL** switch sections **S2-1** and **S2-2** to **OFF** and switch sections **S2-3**, **S2-4**, **S2-5**, **S2-6**, **S2-7**, and **S2-8** to **ON**.

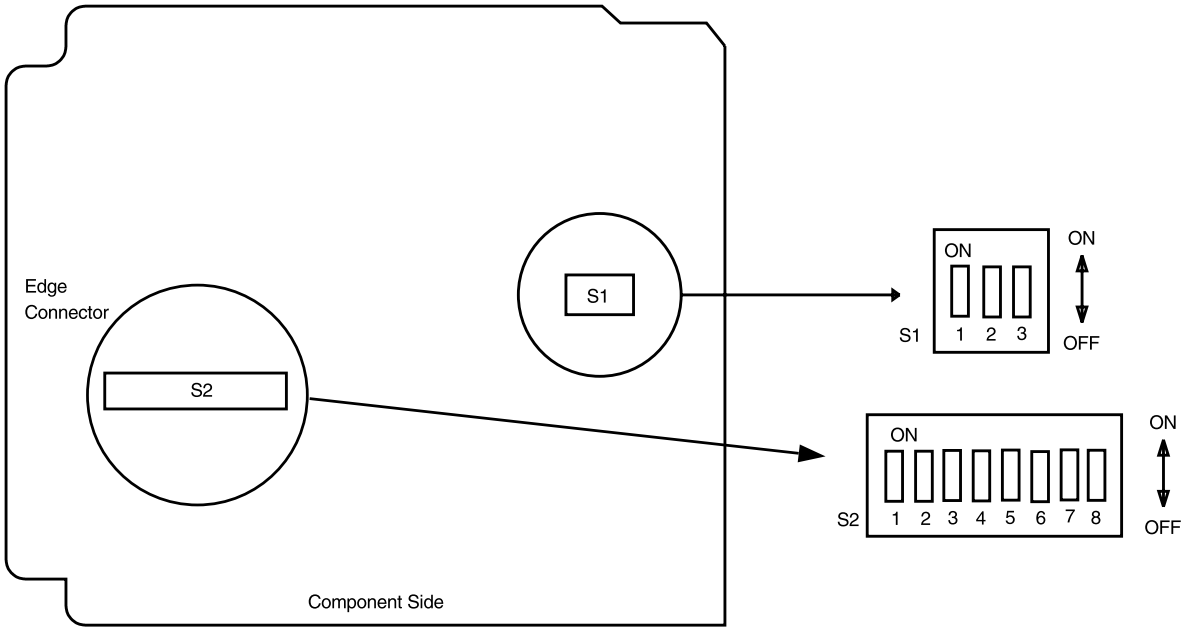

Figure 1. SYSCTL Option Settings

5. **NOTE:**
   Steps 6 and 7 must be performed without unnecessary delays. Familiarize yourself with these steps before continuing with the procedure.

   Read Steps 6 and 7 before proceeding.

6. **CAUTION:**
   Take care to avoid damaging the LEDs that protrude through the opening in the faceplate of the **SYSCTL***.*

   CAUTION:
   Initializing the **SYSCTL** *in the following steps will momentarily interrupt service if protection switches are activated.*

CAUTION:
*The **UPD/INT** pushbutton on the **SYSCTL** is recessed to prevent its accidental operation. You will need a small pointed object, such as a ballpoint pen, to operate it.*

Read the remainder of Steps 6 and 7 before installing the SYSCTL, then seat the **SYSCTL**.

If the following responses do not occur, proceed to **Step 8**.

Response: **FAULT** LED on **BBG8/BBG8B SYSCTL** lights and **ABN** LED on the User Panel lights after approximately 5 seconds. **MJ** and **NE** may light or flash briefly. **FAULT** LED on the **SYSCTL** goes off after approximately 5 seconds. **ABN** LED goes off after approximately 15 seconds. Approximately 1 minute and 30 seconds after the **ABN** goes off, the **CR** LED on the User Panel begins to flash.

7. Momentarily depress the **UPD/INIT** button on the **SYSCTL** while the **CR** LED is flashing (**you have 10 SECONDS** to do this).

If the following responses do not occur, continue with **Step 8**.

Response: **CR** LED on the User Panel stops flashing when the **UPD/INIT** button is pressed.

ABN LED on the User Panel lights after approximately 15 seconds. **ABN** goes off after approximately 30 seconds. Approximately 1 minute and 45 seconds after the **ABN** LED goes off, the **CR** LED on the User Panel flashes again. **DO NOT** depress **UPD/INIT** pushbutton again when the **CR** LED flashes.

All red LEDs on all circuit packs in the **DDM-2000** should be off. Any red LEDs remaining on or flashing represent a failure condition.

Initialization may take 2-3 minutes.

8. **NOTE:**
FiberReach compatible software must be installed in the **BBG8/BBG8B SYSCTL**. When the new **SYSCTL** is installed, one of the following indications will be displayed in the **FE ID** display. Displayed letters or conditions indicate one of the following:

A. Nothing displayed in the **FE ID** display indicates that either Fiber-Reach compatible software is installed in the **SYSCTL** or the **SYSCTL** contains software that is not compatible with the Fiber-Reach shelf. If the **CR** LED did not start flashing in Step 6 and the **FE ID** display is blank, the **SYSCTL** contains software not compatible with the FiberReach shelf. New software must be loaded using the procedures of **DLP-536**.

B. The letter **P** displayed in the **FE ID** display indicates that no software is installed in the **SYSCTL**. If the **P** is followed by a period (**P.**), it means that a previous download attempt has failed and a new software download will have to be attempted locally using the **`ins-prog:tid`** command. If there is no period (**P**), the software can only be downloaded locally.

C. The letter **U** displayed in the **FE ID** display indicates unsupported **SYSCTL** switch settings for the type of shelf being equipped. Remove **SYSCTL**. Check option switch settings and repeat this procedure.

D. The letter **E** displayed in the **FE ID** display indicates that the **SYSCTL** must be replaced. Replace **SYSCTL** and repeat this procedure.

E. The letter **F** displayed in the **FE ID** display indicates that the **SYSCTL** faceplace latch is not fully latched. Latch the faceplate. (A reset occurs after the faceplate is latched.)

F. A flashing letter **L** displayed in the **FE ID** display indicates a low voltage condition (brownout) on the shelf. Use **TAP-119** to clear brownout conditon.

Did the letter "**P**" appear in the **FE ID** display?

If **YES**, continue with **Step 9**.
If **NO**, **STOP. YOU HAVE COMPLETED THIS PROCEDURE**.

9. Find **SYSCTL** with compatible software and repeat this procedure, or install new software using the procedures of **DLP-525**.

10. **STOP. YOU HAVE COMPLETED THIS PROCEDURE**.

11. If FiberReach compatible software is installed, you can retrieve the generic software version ID by depressing the **ACO** button longer than 2 seconds and observing version code on the **FE ID** display. If the software version is not the correct version, you must find a **SYSCTL** with the correct software or install new software using the procedures of **DLP-536**.

    If software not compatible with the FiberReach shelf is installed in the **SYSCTL** and you cannot retrieve the software version (no response), you must find a **SYSCTL** with the correct software or install new software using the procedures of **DLP-536**.

12. **NOTE:**
    If you are using this procedure to replace a **SYSCTL** that was already in service and the correct version of software is installed, there may have been some options set using the craft interface termainal (CIT).

    Refer to **DLP-512** and set any required options.

13. **STOP. YOU HAVE COMPLETED THIS PROCEDURE**.

Replace ECC1/ECC2 User Panel (USPNL) In Service

1. **WARNING:**
   P5 *will have power on it when power is provided to* **P4**. *Avoid contact with and shorts across the terminals on this connector during this procedure.*

   CAUTION:
   Both power feeders A and B MUST be active for this procedure to be done in service. If both are not active, service must be removed from the shelf before this procedure is done.

   Verify **PWR ON A** LED is lit. If not, check power feed and fuse; replace if necessary before proceeding.

2. Disconnect the shelf power lead connectors from **–48VB** and **RTNB** (**P4**, slate/slate-black color wires) on the FiberReach Wideband Shelf.

3. After waiting a few seconds, verify that **PWR ON B** LED is NOT lit.

4. **WARNING:**
   After the following step is completed, the shelf will be receiving unfused –48V power. Do not leave the shelf in this condition. Once the following step is done, the rest of this procedure must be completed.

   Connect the power feed disconnected in the previous step to –48VBB and **RTNBB** (**P5**, green/white).

5. Is **PWR ON B** LED lit.

   If **YES**, recheck connections in **Step 4**.
   If **NO**, continue with **Step 6**.

6. Unscrew screw at top of **ECC2** user panel faceplate and remove **ECC2 USPNL** from the shelf.

7. Replace **ECC2 PNL** and tighten screw at top of faceplate.

8. Verify **PWR ON A** LED is lit.

9. Disconnect power feeder from **P5** (green/white) power cables on FiberReach Shelf.

10. Connect this power feeder to **P4** (slate/slate-black) on FiberReach Shelf.

11. Verify **PWR ON B** LED is now lit.

12. ⚠ **WARNING:**
    P5 *is now hot (–48V). Be sure that* **P5** *is dressed and stored in such a way that shorts across and contact with the terminals is avoided.*

    Press **ACO/TST** pushbutton and verify that all LEDs on the **ECC2 USPNL** are lit.

13. Connect the CIT and verify operation on the CIT interface.

14. Disconnect the CIT.

15. **STOP. YOU HAVE COMPLETED THIS PROCEDURE**.

Install/Remove Lightguide Buildout

1. **WARNING:**
   Unterminated optical connectors may emit invisible laser radiation. Eye damage may occur if beam is viewed directly or with improper optical instruments. Avoid direct exposure to beam.

   CAUTION:
   Use static ground wrist strap whenever handling circuit packs or working on DDM-2000 FiberReach terminal to prevent electrostatic discharge damage to sensitive components.

   Is buildout being installed or removed?

   If **installing**, continue with **Step 2**.
   If **removing**, proceed to **Step 5**.

2. Remove protector caps and plugs (if equipped) from buildout and buildout block.

3. Align lightguide buildout locking tab with slot in buildout block (unlocked position), push in, and rotate clockwise until locked into position. Refer to the appropriate figure (Figure 1, 2, or 3) for the specific buildout type.

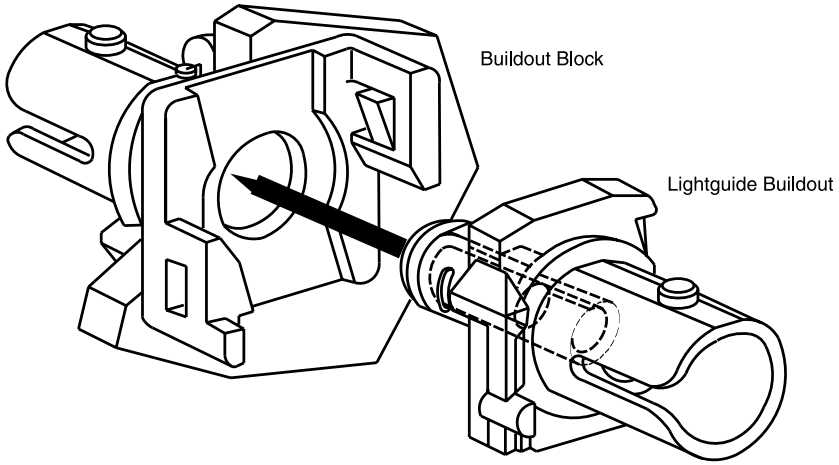

Figure 1. *ST*-Type Universal Buildout

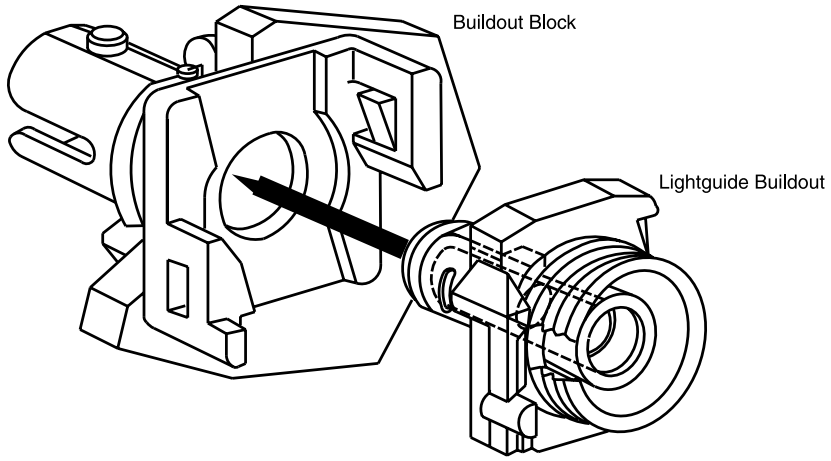

Figure 2. *FC/PC*-Type Universal Buildout

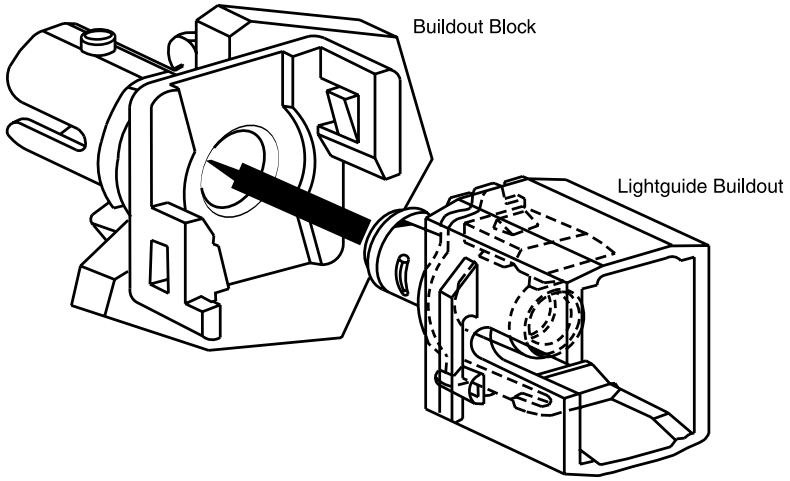

Figure 3. *SC*-Type Universal Buildout

4. **STOP. YOU HAVE COMPLETED THIS PROCEDURE.**

5. Depress locking tab on the buildout until locking tab is free from the locked position, rotate the buildout counterclockwise to the stop position, and separate the buildout block by pulling it toward you. Refer to the appropriate figure in Step 3 for the specific buildout type.

6. **STOP. YOU HAVE COMPLETED THIS PROCEDURE.**

Install OLIU Circuit Packs

1. **WARNING:**
Unterminated optical connectors may emit invisible laser radiation. Avoid direct exposure to the beam. Do not view beam with optical instruments. Use of controls or adjustments or performance of procedures other than those specified herein may result in hazardous radiation exposure.

CAUTION:
Before installing **OLIU***s, ensure all optical fiber connectors and couplings have been properly cleaned* **[DLP-527]***. Signal performance may be degraded if the connectors and couplings are not cleaned properly.*

CAUTION:
If optical fiber cables are routed beneath the **OLIU***s, be careful not to pinch or crush the fibers when the* **OLIU***s are inserted.*

NOTE:
The DDM-2000 FiberReach shelf requires **26-Type OLIU**s (OC-1), **28-Type OLIU**s (OC-3), or **29-Type OLIU**s (OC-12) in the **MAIN** slots. Two **OLIU**s are required.

NOTE:
When installing two **28/29-Type OLIU**s a faceplate interconnect cable assembly, [comcode 847721271] is required.

NOTE:
The DDM-2000 FiberReach shelf requires **22-Type OLIU**s in the **FN** slots for the STS-3c 0x1 application. Two **OLIU**s are required.

NOTE:
The red **FAULT** LED flashes when no signal is present to the **OLIU**s.

NOTE:
When using the following procedures to install the **OLIU**s, if the responses are not correct, check all connections. If connections are correct, replace the **OLIU** that has the wrong response.

NOTE:
When a **28/29-Type OLIU** is installed, an `OLIU connector failed` alarm will occur. Normally, the alarm occurs because the faceplate connector (ribbon cable) is not yet installed.

Install **OLIU** into required **MAIN-1** or **FN-1** slot.

Response: **FAULT** LED and **ACTIVE** LED lights. **FAULT** LED begins flashing after about 10 seconds.

MAIN-1 26-Type, **28-Type**, or **29-Type OLIU** [**MN** LED (`inc. OC3/OC12 LOS`) and **NE ACTY** LED (`holdover mode active`) alarms light.]

FN-1 22-Type OLIU [**CR** LED (`inc. OC3 LOS`)alarm lights.]

2. Install universal **LBO** on **MAIN-1** or **FN-1 OLIU** [**DLP-503**].

3. Connect optical cables to **MAIN-1** or **FN-1 OLIU**.

   Response: **FAULT** LED on **OLIU** goes out.

4. Install second **OLIU** into **MAIN-2** or **FN-2** slot. The FiberReach requires two **OLIU**s for operation.

   Response: **FAULT** LED and **ACTIVE** LED lights.

   MAIN-2 26-Type OLIU FAULT LED begins to flash after about 10 seconds. (The **FAULT** LED may go off for a few seconds before starting to flash.) **MN** LED (`inc. OC1 LOS`) alarm lights.

   MAIN-2 28-Type OLIU FAULT LED begins to flash after about 10 seconds. (The **FAULT** LED may go off for a few seconds before starting to flash.) **MN** LED (`inc. OC3 LOS` and `OLIU connector failed`) alarm lights.

   MAIN-2 29-Type OLIU FAULT LED lights and stays on. **MN** LED (`OLIU CP failed` and `OLIU connector failed`) alarm lights.

   FN-2 22-Type OLIU FAULT LED begins to flash after about 10 seconds. (The **FAULT** LED may go off for a few seconds before starting to flash.) **MN** LED (`inc. OC3 LOS`) alarm lights.

5. Install universal **LBO** on **MAIN-2** or **FN-2 OLIU** [**DLP-503**].

6. Connect optical cables to **MAIN-2** or **FN-2 OLIU**.

   Response: **MAIN-2 26-Type OLIU FAULT** LED goes out.

   MAIN-2 28-Type OLIU FAULT LED goes out.

   MAIN-2 29-Type OLIU FAULT LED remains lit (solid).

   FN-2 22-Type OLIU FAULT LED goes out.

7. Are **28/29-Type OLIU**s being installed?

   If **YES**, continue with **Step 8**.
   If **NO**, proceed to **Step 10**.

8. Connect the faceplate connector (ribbon cable) between **28/29-Type OLIU**s in the **MAIN-1** and **MAIN-2** slots.

   Response: **28-Type OLIU** [**MN** LED (`OLIU connector failed`) alarm will clear.]

   29-Type OLIU FAULT LED goes out. **MN** LED (`OLIU connector failed` and `OLIU CP failed`) alarm will clear.

9. Verify that the connectors on the faceplate connector are properly seated and latched.

10. Have all required OLIUs been installed?

    If **YES**, **STOP. YOU HAVE COMPLETED THIS PROCEDURE.**
    if **NO**, repeat this procedure for all **OLIU**s being installed.

Connect Optical Loop

1. **WARNING:**
Unterminated optical connectors may emit invisible laser radiation. Avoid direct exposure to the beam. Do not view beam with optical instruments. Use of controls or adjustments or performance of procedures other than those specified herein may result in hazardous radiation exposure.

CAUTION:
Take care to avoid damaging the LEDs that protrude through the opening in the faceplate of the **OLIU***.*

CAUTION:
The **26G-U/26G2-U OLIU** *requires a 15 dB LBO when it is looped on itself. The* **29G-U/29H-U OLIU** *requires a 10 dB LBO when it is looped on itself.*

CAUTION:
Avoid excessive bending of the optical jumper used to loop the **OLIU** *on itself.*

CAUTION:
All optical fiber connectors and couplings should be properly cleaned **[DLP-527]***. Signal performance may be degraded if the connectors and couplings are not cleaned properly.*

CAUTION:
26G-U/26G2-U OLIU*s,* **22F-U/22F2-U OLIU***s,* **22G2-U/22G3-U/22G4-U OLIU***s,* **22D-U OLIU***s,* **28G-U/28G2-U OLIU**s *and* **29G-U/29H-U OLIU***s are shipped with 0 dB SC-type universal LBOs installed. The 0 dB LBO must be replaced with a 15 dB LBO when the* **26G-U/26G2-U OLIU** *is looped on itself or a 10 dB LBO when the* **29G-U/29H-U OLIU** *is looped on itself.*

NOTE:
It may take from 15 seconds to 3 minutes and 25 seconds for the **FAULT** LEDs to stop flashing, depending on the setting of the signal degrade threshold (–5 to –9).

NOTE:
The lightguide jumpers used to loop the **OLIU**s must be equipped with SC, FC, or *ST* connectors at both ends, depending on the type of **OLIU** connector. See Figures 1, 2, and 3.

NOTE:
The single-mode to single-mode (SM-SM) LBOs are installed on the **OUT** buildout block of the **OLIU**. The single-mode to multimode (SM-MM) or multimode to multimode (MM-MM) LBOs are installed on the **IN** buildout block of the **OLIU**.

Which **OLIU**s are being looped?

If **26G-U/26G2-U/29G-U/29H-U OLIU**, continue with **Step 2**.
If **22F-U/22F2-U/22G2-U/22G3-U/22G4-U/22D-U/28G-U/28G2-U OLIU**s, proceed to **Step 7**.

2. **NOTE:**
The **26G-U/26G2-U/29G-U/29H-U OLIU**s require single-mode lightguide jumpers (Table A).

Table A – Single-Mode Lightguide Jumpers

Code	Comcode	Length (Feet)	Connectors
FS1E-E-2	105357727	2	ST-ST
LS1SC-SC-2	106908247	2	SC-SC
LS1FP-FP-10	106593825	10	FC-FC

For the **26G-U/26G2-U OLIU**, replace the 0 dB LBO on the **OUT** or **IN** buildout block(s) with the required 15 dB LBO on the **MAIN-1 OLIU**. For the **29G-U/29H-U OLIU**, replace the 0 dB LBO on the **OUT** or **IN** buildout block(s) with the required 10 dB LBO on the **MAIN-1 OLIU**. See Tables B or C.

Table B – Universal 10 dB Lightguide Buildouts

Code	Comcode	Connector Type	Cable Connection	Color
A3060D1	107406159	SC	SM-SM	Yellow
A3070D1	107406191	ST	SM-SM	Yellow
A3080D1	107406233	FC	SM-SM	Yellow
ASCS10	108314600	SC	SM-SM	Green
ASTS10	108053190	*ST*	SM-SM	Green
AFCS10	108107194	FC	SM-SM	Green
ASCM10	108440595	SC	SM-MM	Beige
ASTM10	108052994	ST	SM-MM	Beige
AFCM10	108107301	FC	SM-MM	Beige

Table C – Universal 15 dB Lightguide Buildouts

Code	Comcode	Connector Type	Cable Connection	Color
A3060F	106708985	SC	SM-SM	Yellow
A3070F	106795388	*ST*	SM-SM	Yellow
A3080F	106795438	FC	SM-SM	Yellow
ASCS15	108440538	SC	SM-SM	Green
ASTS15	108053240	*ST*	SM-SM	Green
AFCS15	108107244	FC	SM-SM	Green
ASCM15	108440611	SC	SM-MM	Beige
ASTM15	108053018	ST	SM-MM	Beige
AFCM15	108107327	FC	SM-MM	Beige

Table D – Universal 0 dB Lightguide Buildouts

Code	Comcode	Connector Type	Cable Connection	Color
A3060	106708951	SC	SM-SM & MM-MM	White
A3070	106795354	*ST*	SM-SM & MM-MM	White
A3080	106795404	FC	SM-SM & MM-MM	White

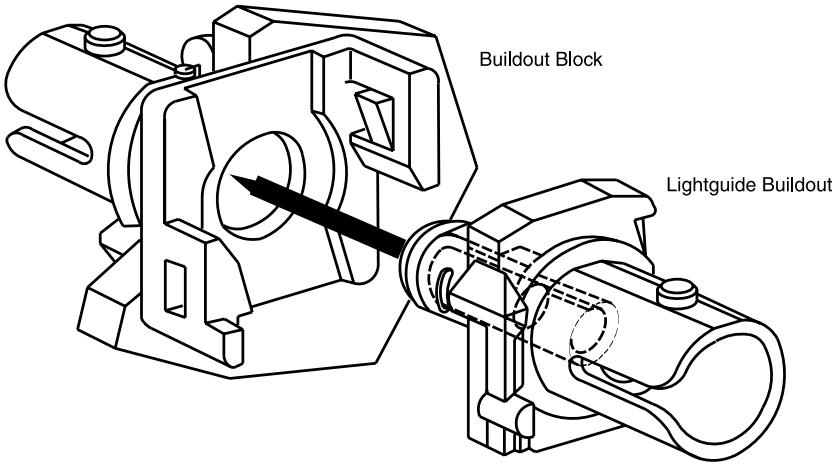

Figure 1. *ST*-Type Universal Buildout

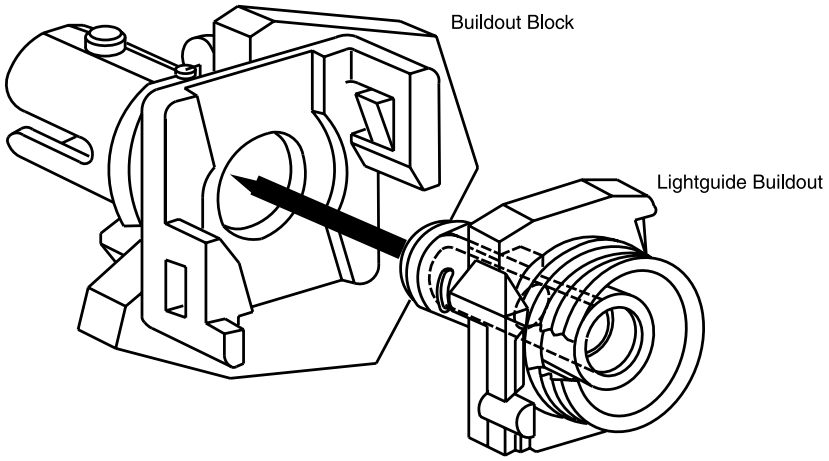

Figure 2. *FC*-Type Universal Buildout

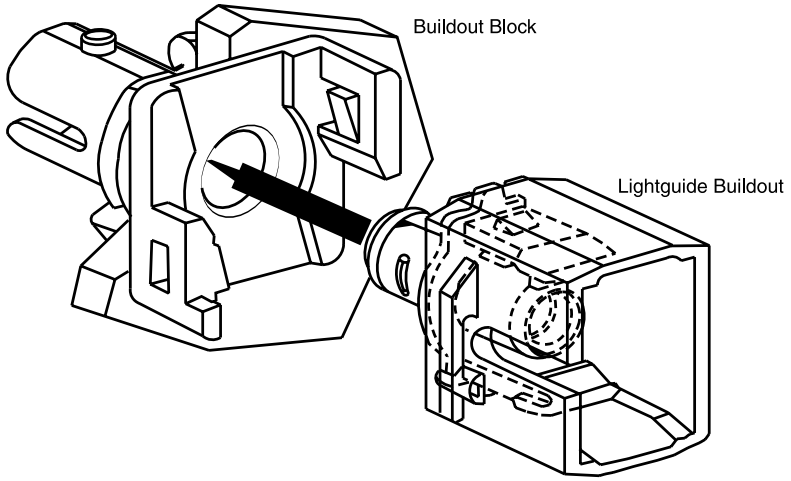

Figure 3. *SC*-Type Universal Buildout

Table E – Multimode Lightguide Jumpers

Code	Comcode	Length (Feet)	Connectors
FL1E-E-2	105351795	2	ST-ST
LL1SC-SC-2	106908668	2	SC-SC
LL1FP-FP-10	107095549	10	FC-FC

3. Use lightguide jumpers to loop the **IN** and **OUT** connectors of the **MAIN-1 OLIU**. See Table A.

   Response: **FAULT** LED on **SYSCTL** flashes.
   ACTIVE LED remains on.
   Lighted major (**MJ**) or minor (**MN**) LED remains lit.
   [It may take 1 minute or more for LEDs and alarms to stabilize after the **OLIU**(s) are looped].

   If responses are not correct, check connections and looping fibers. Clean connectors and repeat Step 3.
   If responses are still not correct, replace **OLIU**.

4. For the **26G-U/26G2-U OLIU**, replace the 0 dB LBO on the **OUT** or **IN** buildout block(s) with the required 15 dB LBO on the **MAIN-1 OLIU**. For the **29G-U/29H-U OLIU**, replace the 0 dB LBO on the **OUT** or **IN** buildout block(s) with the required 10 dB LBO on the **MAIN-1 OLIU**. See Tables B or C.

5. Use lightguide jumpers to loop the **IN** and **OUT** connectors of the **MAIN-2 OLIU**. See Table A.

   Response: **FAULT** LED stops flashing.
   ACTIVE LED remains on.
   Major/Minor (**MJ/MN**) alarm goes off.

6. **STOP. YOU HAVE COMPLETED THIS PROCEDURE**.

7. The **22F-U/22F2-U/22G2-U/22G3-U/22G4-U/28G-U/28G2-U OLIU**s require single-mode lightguide jumpers and 0 dB LBOs. The **22D-U OLIU** requires multimode lightguide jumpers and 0 dB LBOs. See Tables A, E, and D.

8. Use lightguide jumpers to loop the **IN** and **OUT** connectors of the **MAIN-1** or **FN-1 OLIU**. See Tables A and E.

   Response: **FAULT** LED on **SYSCTL** flashes.
   ACTIVE LED remains on.
   Lighted major (**MJ**) or minor (**MN**) LED remains lit.
   [It may take 1 minute or more for LEDs and alarms to stabilize after the **OLIU**(s) are looped].

   If responses are not correct, check connections and looping fibers. Clean connectors and repeat Step 8.
   If responses are still not correct, replace **OLIU**.

9. Use lightguide jumpers to loop the **IN** and **OUT** connectors of the **MAIN-2** or **FN-2 OLIU**. See Tables A and E.

   Response: **FAULT** LED stops flashing.
   ACTIVE LED remains on.
   Major/Minor (**MJ/MN**) alarm goes off.

10. **STOP. YOU HAVE COMPLETED THIS PROCEDURE**.

DDM-2000 FiberReach Receiver Sensitivity Test

1. **WARNING:**
Unterminated optical connectors may emit invisible laser radiation. Avoid direct exposure to the beam. Do not view beam with optical instruments. Use of controls or adjustments or performance of procedures other than those specified herein may result in hazardous radiation exposure.

CAUTION:
Take care to avoid damaging LEDs that protrude through opening in faceplate of **OLIU***.*

CAUTION:
Avoid excessive bending of optical jumper and cables.

CAUTION:
All optical fiber connectors, couplings, and buildouts should be properly cleaned. Signal performance may be degraded if connectors, couplings, or buildouts are not cleaned properly. (**DLP-527**)

NOTE:
It may take from 15 seconds to 3 minutes and 25 seconds for **FAULT** LEDs to stop flashing, depending on setting of signal degrade threshold (–5 to –9).

NOTE:
This test may be accomplished with one shelf by simply using an optical loopback after the optical splitter.

Configure the DDM-2000 shelf and test equipment as shown in Figure 1.

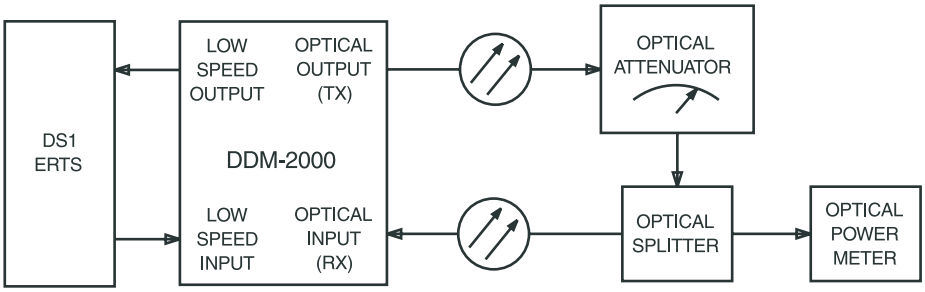

Figure 1. DDM-2000 Receiver Sensitivity Test Configuration

2. Set variable optical attenuator to obtain power level reading on optical power meter as required from Table A.

Table A – OC-1/OC-3/OC-12 OLIU Optical Power Levels

OC-1 OLIU	Power Level (dBm)
26G-U, 26G2-U	–30.8
OC-3 OLIU	**Power Level (dBm)**
22G-U, **22G2-U**, **22G3-U**, **22G4-U**	–34.0
22F-U, **22F2-U**	–34.0
22D-U	–33.8(Cont. Env.) –31.8(Uncont. Env.)
28G-U, 28G2-U	–34.0
OC-12 OLIU	**Power Level (dBm)**
29G-U	–30.5
29H-U	–31.0

3. Monitor the DS1 received signal with the DS1/DS3 Error Rate Test Set (ERTS) for 30 minutes and ensure a bit error rate (BER) result of 10^{-10} or better.

4. Did **OLIU** pass BER test?

   If **YES**, **STOP. YOU HAVE COMPLETED THIS PROCEDURE**.
   If **NO**, continue with **Step 5**.

5. Clean optical attenuators and connectors and repeat test. If test fails again, replace **OLIU**.

Install T1EXT Circuit Packs

1. **CAUTION:**
   In addition to primary lightning protection, an external Lightning and Surge Secondary Protection Assembly (ED-8C783-30 or equivalent) is required for **T1EXT** *circuits used in outside plant applications.*

   Take care to avoid damaging the LEDs that protrude through the opening in the faceplate of the **T1EXT** *circuit pack.*

2. **NOTE:**
   DS1 line coding may be set using either the option switches or the **`set-t1`** command. It is recommended that a policy be established to set line coding using either the switches or the command. If DS1 line code (lc) parameters are set using the **`set-t1`** command, a software override will be active and the circuit pack switch settings will have no effect. The software override will remain active until the **`set-t1`** command is executed again and the **`noOverride`** option is selected. The **`rtrv-t1`** command may be used to check line code settings.

   Refer toTable A and Figure 1 and set the line code option switches, if required.

Table A – T1EXT Line Code Settings (Note)

Line Code Format	Switch S1 Settings				
	S1-1 (Port 1)	S1-2 (Port 2)	S1-3 (Unused)	S1-4 (Unused)	S1-5 (Unused)
B8ZS	OFF	OFF	OFF	OFF	OFF
AMI	ON	ON			

Note: Switch 1, section 3 (**S1-3**), section 4 (**S1-4**), section 5 (**S1-5**) must be set to **OFF**.

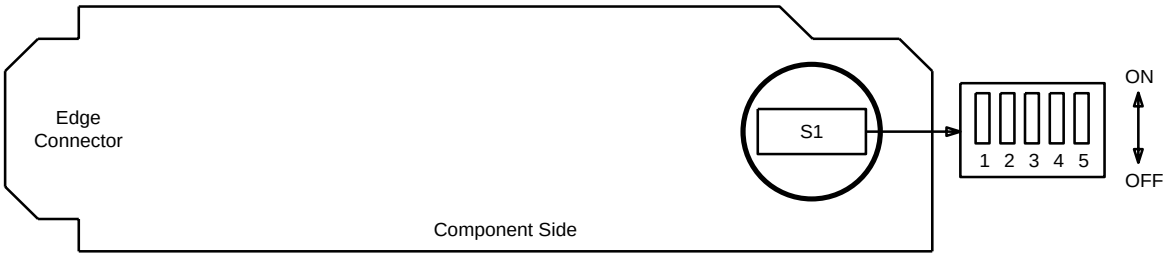

Figure 1. T1EXT Option Settings

3. **NOTE:**
   If the response is not correct when the **T1EXT** circuit pack is installed, check option switch setting. If settings are correct, replace the **T1EXT** circuit pack.

   Seat **T1EXT** circuit pack in required LOW SPEED (**LS**) slot being equipped.

   Response: **FAULT** LED on **T1EXT** circuit pack lights and may remain lighted for about 40 seconds and then goes off.

4. Repeat this procedure from **Step 1** for each service **T1EXT** circuit pack being installed.

5. **NOTE:**
   One protection **T1EXT** circuit pack may be installed for each service **T1EXT** circuit pack installed, if the shelf is equipped for 1X1 protection mode. One protection **T1EXT** circuit pack may be installed to protect all service **T1EXT** circuit packs installed, if the shelf is equipped for 1X7 protection mode. The **SYSCTL** automatically provisions the protection **T1EXT** circuit pack to match the line code setting (B8ZS or AMI) of any service **T1EXT** circuit pack that it protects.

   Is protection **T1EXT** circuit pack(s) being installed?

   If **YES**, continue with **Step 6**.
   If **NO**, **STOP. YOU HAVE COMPLETED THIS PROCEDURE**.

6. Refer to Figure 1 and Table A, and set line code option switches on protection **T1EXT** circuit pack(s).

7. Is shelf provisioned for 1X1 or 1X7 protection? (See **NTP-011** and **NTP-012**).

   If **1X1**, continue with **Step 8**.
   If **1X7**, proceed to **Step 10**.

8. Seat protection **T1EXT** circuit pack into slot **LS**-[**A-2**, **B-2**, **C-2**, or **D-2**] immediately above the service low-speed group being equipped.

9. **STOP. YOU HAVE COMPLETED THIS PROCEDURE**.

10. Seat protection **T1EXT** circuit pack into slot **LS**-[**D-2**].

11. Install **177A** Apparatus Blank into all unequipped service and protection LOW SPEED slots, if required.

12. **STOP. YOU HAVE COMPLETED THIS PROCEDURE**.

Install DS1/DS1PM Circuit Packs

1. **CAUTION:**
   Take care to avoid damaging the LEDs that protrude through the opening in the faceplate of the **DS1/DS1PM** *circuit pack.*

   Determine from office records the length of the DS1 cabling between the DDM-2000 FiberReach and the DSX-1 cross-connect point.

2. **NOTE:**
   Switch 1, sections 1 through 3 (**S1-1, S1-2, S1-3**), are set according to the length of DS1 cabling between the DDM-2000 FiberReach and the DSX-1 cross-connection. Switch 1, sections 4 through 7 (**S1-4, S1-5, S1-6, S1-7**), are set for the type of line coding (B8ZS or AMI) required of the DS1 signal. Switch 1, section 8 (**S1-8**) is unused and ignored by the system.

   NOTE:
   To set switch to ON, depress rocker or slide switch toward side labeled **ON** in the figure. To set switch to OFF, depress rocker or slide switch toward side labeled **OFF** in the figure.

   Refer to Figure 1 and Table A and set LBO option switches.

Table A – DS1/DS1PM Cable LBO Settings

613C (608C) Cable Length (feet)	1249C Cable Length (feet)	Other Cable dB Loss at 772 kHz	Switch S1 Settings		
			S1-1	S1-2	S1-3
0 to 133	0 to 90	0 to 0.6	OFF	OFF	OFF
>133 to 267	>90 to 180	>0.6 to 1.2	OFF	OFF	ON
>267 to 400	>180 to 270	>1.2 to 1.8	OFF	ON	OFF
>400 to 533	>270 to 360	>1.8 to 2.4	OFF	ON	ON
>533 to 655	>360 to 450	>2.4 to 2.8	ON	OFF	OFF

Note: Invalid switch settings will cause the **FAULT** LED to light and a `DS1 CP failed` alarm.

3. **NOTE:**
DS1 line coding may be set using either the option switches or the **`set-t1`** command. It is recommended that a policy be established to set line coding using either the switches or the command. If DS1 line code (lc) parameters are set using the **`set-t1`** command, a software override will be active and the circuit pack switch settings will have no effect. The software override will remain active until the **`set-t1`** command is executed again and the **`noOverride`** option is selected. The **`rtrv-t1`** command may be used to check line code settings.

Refer to Table B and Figure 1 and set the line code option switches, if required.

Table B – DS1/DS1PM Line Code Settings

Line Code Format	Switch S1 Settings				
	S1-4 (Port 1)	S1-5 (Port 2)	S1-6 (Port 3)	S1-7 (Port 4)	S1-8 (Note)
B8ZS	OFF	OFF	OFF	OFF	OFF
AMI	ON	ON	ON	ON	

Note: Switch 1, section 8 (S1-8) is unused and ignored by the system.

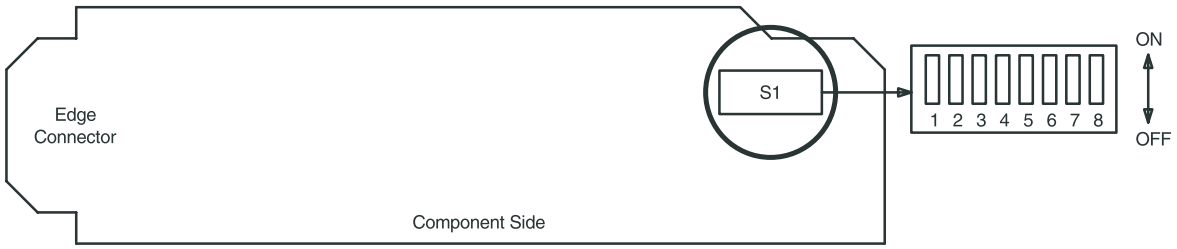

Figure 1. DS1/DS1PM Option Settings

4. **NOTE:**
If the response is not correct when the **DS1/DS1PM** circuit pack is installed, check option switch setting. If settings are correct, replace the **DS1/DS1PM** circuit pack.

Seat **DS1/DS1PM** circuit pack in required slot of **LOW SPEED** group being equipped.

Response: **FAULT** LED on **DS1/DS1PM** circuit pack lights and may remain lit for about 40 seconds and then goes off.

5. Repeat this procedure from **Step 1** for each service **DS1/DS1PM** circuit pack being installed.

6. **NOTE:**
One protection **DS1/DS1PM** circuit pack may be installed for each service **DS1/DS1PM** circuit pack installed, if the shelf is equipped for 1X1 protection mode. One protection **DS1/DS1PM** circuit pack may be installed to protect all service **DS1/DS1PM** circuit packs installed, if the shelf is equipped for 1X7 protection mode. The **SYSCTL** automatically provisions the protection **DS1/DS1PM** circuit pack to match the line code setting (B8ZS or AMI) of any service **DS1/DS1PM** circuit pack that it protects.

Is protection DS1 circuit pack(s) being installed?

If **YES**, continue with **Step 7**.
If **NO**, **STOP. YOU HAVE COMPLETED THIS PROCEDURE**.

7. Refer to Figure 1 and Table A and set LBO option switches on protection **DS1/DS1PM** circuit pack(s).

8. Is shelf equipped for 1X1 or 1X7 protection mode.

If **1X1**, continue with **Step 9**.
If **1X7**, proceed to **Step 11**.

9. Seat protection **DS1/DS1PM** circuit pack into **LS**-[**A-2**, **B-2**, **C-2**, or **D-2**] slot immediately above the service low-speed group being equipped.

10. **STOP. YOU HAVE COMPLETED THIS PROCEDURE**.

11. Seat protection **DS1/DS1PM** circuit pack into slot **LS**-[**D-2**].

12. Install **177A** Apparatus Blanks into all unequipped service and protection DS1 slots, if required.

13. **STOP. YOU HAVE COMPLETED THIS PROCEDURE**.

Perform LED Test

1. **CAUTION:**
   Take care to avoid damaging the LEDs that protrude through the openings in the faceplates of the circuit packs.

   Is a CIT available?

   If **YES**, continue with **Step 2**.
   If **NO**, proceed to **Step 5**.

2. Connect CIT to User Panel.

   Reference: **DLP-521**

3. Use the **`test-led:`***`address`***`:r=( )`** command to test LEDs.

   Where address = address identifier of the system, slot, or user panel that contains the LEDs to be tested. Default is **`all`**.

   r = number of times (1 through 10) test is repeated.

   Response: All LEDs for the specified address identifier light. For a **SYSCTL** LED test, all segments of the **SYSCTL FE ID** display (including the period) light. After 10 seconds, all LEDs go off. After another 10 seconds, a completion message is printed and all LEDs are updated to show the current status of the system.

4. Did LED test pass?

   If **YES**, **STOP. YOU HAVE COMPLETED THIS PROCEDURE**.
   If **NO**, proceed to **Step 7**.

5. **NOTE:**
When the **ACO/TEST** pushbutton is depressed, all LEDs and the 7-segment **FE ID** display on the **SYSCTL** light. If the **ACO/TEST** pushbutton is released within 2 seconds, the LED test completes and the 7-segment display and all LEDs revert to normal operation. If the **ACO/TEST** pushbutton is depressed longer than 2 seconds, the 7-segment display goes blank for 2 seconds and then each digit of the generic software version code is scrolled through the display. The LEDs remain lit while the code is being displayed. When the **ACO** pushbutton is released, the LEDs remain lighted until the full software version code is displayed. If the **ACO/TEST** pushbutton is still depressed when the software version code has completed cycling, the display goes blank for 2 seconds and starts cycling through the software version code again. This continues as long as the **ACO/TEST** pushbutton is depressed.

Depress the **ACO/TEST** pushbutton on the User Panel.

Response: All LEDs and the **SYSCTL** 7-segment display light.

6. Was response correct?

If **YES**, **STOP. YOU HAVE COMPLETED THIS PROCEDURE**.
If **NO**, continue with **Step 7**.

7. Were you sent here by another procedure to perform an LED test?

If **YES**, continue with **Step 8**.
If **NO**, do **Trouble Clearing: TAP-115**.

8. Record the circuit pack(s) (LEDs) that failed the LED test and return to the procedure that sent you here.

9. **STOP. YOU HAVE COMPLETED THIS PROCEDURE**.

Perform DS1 Transmission Test

1. **NOTE:**
This procedure may be used to perform individual DS1 transmission tests in the mux (toward the fiber) or demux (toward the DSX or T1 lines) direction. When this procedure is being used to perform end-to-end DS1 tests, it is assumed that the complete end-to-end system has already been tested and that only a particular DS1 port is being tested at this time. It is further assumed that the DS1 options (**DS1/DS1PM** circuit packs) have been set correctly (using the **`set-t1:`** command) at both ends of the circuit being tested. The **`rtrv-t1:`** command may be used to check for proper DS1 option settings. Ensure proper DS1 line coding settings (AMI/B8ZS) at DS1 ends of the circuit.

NOTE:
Transmission tests in the *mux* direction may be local or end-to-end tests (see Figure 1). Transmission tests in the *demux* direction may be local cross-connect tests (see Figure). The "Commands and Report"s section of this manual, under TEST-TRMSN-T1, gives an explanation of commands.

NOTE:
This test can be performed either with a CIT and the automated test command **`test-trmsn-t1`** or with a suitable low speed test set (such as a KS-20775, L1 DS1 Error Rate Test Set or a KS-22331, L1/KS-22332, L2 DS1/DS1C/DS2 Error Rate Test Set).

NOTE:
When this procedure is used to do end-to-end tests, one DDM-2000 shelf will be referred to as the near end and the other shelf as the far end. These designations are arbitrary; either shelf can be the near-end or the far-end shelf.

NOTE:
Proper cross-connections must be made at each shelf to establish the complete end-to-end path for the DS1 circuit being tested. Release 3.0 has no default cross-connections and supports only manual VT1.5 cross-connections. Release 3.1 and later has no default cross-connections and supports only manual VT1.5 and STS-1 cross-connections. See the description of the following commands in the "Commands and Reports" section of this manual: **`dlt-crs-sts1`**, **`dlt-crs-vt1, ent-crs-sts1`**, **`ent-crs-vt1`**, **`rtrv-crs-sts1`**, **`rtrv-crs-vt1`**, **`set-ne`**, and **`rtrv-ne`**. See *Cross-Connection Provisioning* in the "Administration and Provisioning" section of this manual for more information on cross-connection provisioning.

NOTE:
A CIT is required to make cross-connections for this test.

At the near-end **DDM-2000**, connect the CIT to the **CIT** jack on the User Panel, if required.

Reference: **DLP-521**

2. If this test is being performed on a shelf that has the **OLIU**s looped back, use the **`rtrv-sync`** and **`switch-sync:s=`***`mode`***`:pri=manual`** commands to verify/switch timing mode to *`holdover`*.

3. **NOTE:**
   Work orders, office records, or CIT **`ent-crs-{sts1`** or **`vt1}`** or **`rtrv-crs-{sts1`** or **`vt1}`** commands may be used to make or verify cross-connections.

   At each shelf in the network, make/verify that proper STS-1/VT1(DS1) terminating and pass-through cross-connections have been made for each DS1 circuit being tested, as required.

4. Are you using CIT and **`test-trmsn-t1`** command to perform this test?

   If **YES**, continue with **Step 5**.
   If **NO**, proceed to **Step 22**.

5. **NOTE:**
   If one terminating end is equipped with **STS1E** circuit packs to provide EC-1 service and the other terminating end is equipped with **DS1**, **DS1PM**, or **T1EXT** circuit packs, the DS1 transmission test is performed from the DS1 terminating end. If the CIT and **`test-trmsn-t1:`** command is being used to perform the test and you are at the EC-1 terminating end, log into the DS1 end to perform the test using the **`test-trmsn-t1:`** command.

   See Figures 1 and 2. If local tests are being performed, the fiber loopbacks at the near-end **OLIU**s must be in place. If end-to-end tests are being performed, do ONE of the following:

   a. Connect a patch cord from the **OUT** jack to the **IN** jack at the far-end DSX-1, STSX, DSX-3 cross-connection, or T1 interface associated with the DS1 channel to be tested.

b. Use the **`rlgn`** command to log in to the far-end shelf and use the **`opr-lpbk-t1:`***`address`* or **`opr-lpbk-ec1:`***`address`* command to loop back the DS1, EC-1, DS3, ot T1 port(s) at the far end. Use **`logout`** or **`toggle`** (ctrl t) command to return control of CIT to near end.

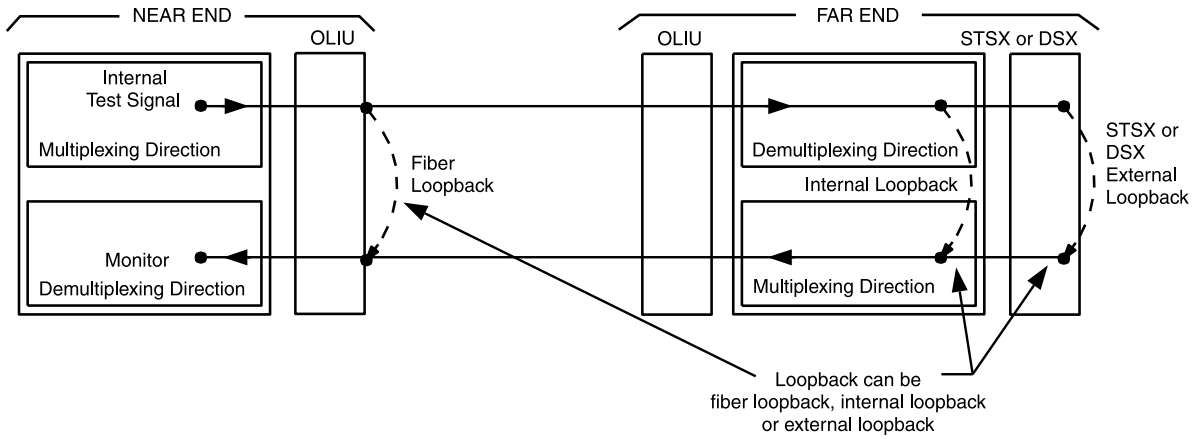

Figure 1. Transmission Test of DS1 Signal in MUX Direction

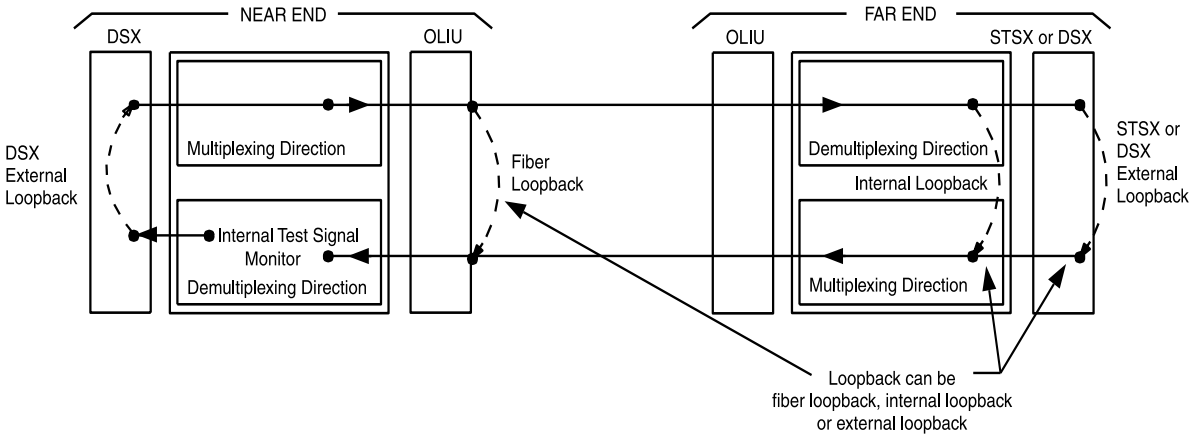

Figure 2. Transmission Test of DS1 Signal in DEMUX Direction

6. Are you doing this test in the mux or demux direction?

   If **MUX** direction, continue with **Step 7**.
   If **DEMUX** direction, proceed to **Step 9**.

7. At the near end, use the following command to perform a test of the DS1 loop in the fiber direction: **`test-trmsn-t1:`***`address`***`:dirn=mux:dur=( );`**

   Where *address* = address identifier of the DS1/T1 signal.

   dirn = direction of the test. If **`dirn=mux`**, direction is toward fiber.

   dur = duration of the test in minutes (1-120); default is 1.

8. Was the test successful (error free)?

   If **YES**, proceed to **Step 12**.
   If **NO**, proceed to **Step 36**.

9. **NOTE:**
   The **DS1/DS1PM** circuit packs are connected to a DSX-1 cross connect and **T1EXT** circuit packs are connected to a T1 interface.

   See Figure 2. At the near-end DSX-1 cross-connection or T1 interface associated with the DDM-2000 being tested, connect a patch cord from the **OUT** jack to the **IN** jack for the DS1 channel to be tested.

10. Use the following command to perform a DS1 transmission test in the demux direction to test the DS1 loop in the DSX direction:
    `test-trmsn-t1:`*`address`***`:dirn=demux:dur=( );`**

    Where *address* = address identifier of the DS1/T1 signal.

    dirn = direction of the test. If **`dirn=demux`**, direction is toward DSX or T1 interface.

    dur = duration of the test in minutes (1-120); default is 1.

11. Was the test successful (error free)?

    If **YES**, continue with **Step 12**.
    If **NO**, proceed to **Step 36**.

12. Is this first service being placed on the group and is a protection **DS1**, **DS1PM**, or **T1EXT** circuit pack installed?

    If **YES**, continue with **Step 13**.
    If **NO**, proceed to **Step 17**.

13. Use the following command to switch from service to protection circuit pack: **`switch-ls:`***`address`***`:pri=manual;`**.

14. Repeat the transmission test in the mux (or demux) direction using the following command:
    `test-trmsn-t1:`*`address`***`:dirn=mux (or demux):dur=( );`**.

15. Was the test successful (error free)?

    If **YES**, continue with **Step 16**.
    If **NO**, proceed to **Step 36**.

16. Use the following command to clear active switch requests:
    `switch-ls:`*`address`***`:pri=reset;`**.

17. **NOTE:**
    If this is a single-ring configuration and the transmission test is being performed in the **mux** direction, use the **`switch-path`** command to switch the path to the other ring and then repeat this test before releasing loopbacks.

    The DS1 circuit under test has passed the DS1 transmission test. Remove the looping patch cords from the cross-connect point. Use the **`rls-lpbk-t1`** command to release loopback(s) at the far end, if required.

18. At the near-end (and the far-end) DDM-2000, momentarily depress the **UPD/INIT** button on the **SYSCTL** (or use the **`upd`** command) to update the **SYSCTL** and remove alarms after the loopbacks have been removed.

19. Repeat this procedure from **Step 3** for any additional DS1 circuits to be tested.

20. Use the **`rtrv-sync`** and **`switch-sync:s=`***`mode`***`:pri=reset`** commands to verify/switch timing mode back to *`LoopTimed`*.

21. **STOP. YOU HAVE COMPLETED THIS PROCEDURE**.

22. See Figure 1. If local tests are being performed, the fiber loopback at the near-end **OLIU** must be in place. If end-to-end tests are being performed, at the far-end DSX-1, STSX cross-connect point, or T1 interface associated with the DDM-2000 being tested, connect a patch cord from the **OUT** jack to the **IN** jack for the DS1 channel to be tested.

23. At the near-end DDM-2000 cross-connect point, connect the DS1 test set to the **IN** and **OUT** jacks associated with the circuit under test.

24. Use the DS1 test set to test for error-free transmission.

25. Was the test successful (error free)?

    If **YES**, continue with **Step 26**.
    If **NO**, proceed to **Step 36**.

26. Is this first service being placed on the group and is protection circuit pack installed?

    If **YES**, continue with **Step 27**.
    If **NO**, proceed to **Step 31**.

27. Unseat the service **DS1**, **DS1PM**, or **T1EXT** circuit pack associated with the circuit under test.

28. Repeat the DS1 transmission test with the DS1 test set.

29. Was the test successful (error free)?

    If **YES**, continue with **Step 30**.
    If **NO**, proceed to **Step 36**.

30. Reseat the **DS1**, **DS1PM**, or **T1EXT** circuit pack associated with the circuit under test.

31. The **DS1** circuit under test has passed the DS1 transmission test. Remove the looping patch cords from the cross-connections.

32. At the near-end (and the far-end) DDM-2000, momentarily depress the **UPD/INIT** button on the **SYSCTL** to update the **SYSCTL**.

33. Repeat this procedure from **Step 22** for any additional DS1 circuits to be tested.

34. Use the **`rtrv-sync`** and **`switch-sync:s=`***`mode`***`:pri=reset`** commands to verify/switch timing mode back to *`LoopTimed`*.

35. **STOP. YOU HAVE COMPLETED THIS PROCEDURE**.

36. Check for line code (AMI/B8ZS) mismatch at near end and far end. If mismatch is found, set line code [**DLP-513**] to correct value and repeat this test. If no trouble is found, continue with the next step.

37. In some releases, if **`dlc=yes`** as set by the **`set-t1`** command, loopbacks are not recognized (`loopback not recognized`) in this test. Use **`rtrv-t1`** command to check if **`dlc=yes`**.

38. Is `dlc` set to `yes`?

    If **YES**, continue with **Step 39**.
    If **NO**, proceed to **Step 40**.

39. Use **`set-t1`** command to temporarily set **`dlc=no`** and repeat this test. If the test fails again, continue with the next step.

40. Has the **DS1**, **DS1PM**, or **T1EXT** circuit pack that failed the test been replaced?

    If **YES**, proceed to **Step 43**.
    If **NO**, continue with **Step 41**.

41. Replace the **DS1**, **DS1PM**, or **T1EXT** circuit pack that failed the test.

    Reference: **DLP-523**

42. Repeat this procedure for the **DS1**, **DS1PM**, or **T1EXT** circuit pack that failed.

43. Trouble may be in the DSX cross-connect or T1 interface wiring, VT1/STS1 cross-connections in the network, or the shelf backplane. Use the rtrv-crs-( ) command to ensure proper VT1/STS1 cross-connections have been made at each shelf in the ring for the DS1 being tested. If no trouble found, check DSX cross-connect, T1 interface wiring and backplane connections. If other alarms or trouble indications are present, refer to **Trouble Clearing: IXL-001** to isolate the trouble. If no alarms or indications are present and a CIT is available, use the RETRIEVE commands (for example, **`rtrv-alm`**, **`rtrv-hsty`**, etc.) to check for other trouble indications.

44. **STOP. YOU HAVE COMPLETED THIS PROCEDURE**.

Remove –48 V DC User Panel Fuse

1. Obtain multimeter capable of measuring DC voltage in the 40 to 60 volt range.

2. **WARNING:**
   –48 V DC is present in the fuse holders and the **–48V A***,* **–RTN A***,* **–48V B***, and* **–RTN B** *power connectors on the backplane shelf. It may also be present on the* **–48V BB***,* **–RTN BB** *connector.*

   CAUTION:
   If system is in service, service interruption will occur if both fuses are removed or both power feeders are disconnected. Do not remove any User Panel fuse that does not indicate blown without first verifying that –48 V is present on the other incoming power feeder.

   Does fuse indicator indicate blown fuse?

   If **YES**, continue with **Step 3**.
   If **NO**, proceed to **Step 7**.

3. Replace –48 V blown fuse.

4. Did fuse blow again?

   If **YES**, continue with **Step 5**.
   If **NO**, proceed to **Step 7**.

5. Trouble in User Panel or backplane connector: If you need assistance, notify your supervisor, your local technical support organization, or call Lucent Technologies RTAC, per local operating instructions. If User Panel needs to be replaced, see **DLP-502**.

6. **STOP. YOU HAVE COMPLETED THIS PROCEDURE**.

7. **CAUTION:**
   Before removing a fuse that does not have a failure indicator activated, you must first verify that –48 V is available to the shelf through the fuse that is not going to be removed.

   Remove the **SYSCTL**.

8. If fuse **FA** is being removed, verify that –48 V DC is present between **–48V A** (negative connector) and **–RTN A** (positive connector) on backplane of shelf.

   If fuse **FB** is being removed, verify that –48 V DC is present between **–48V B** (negative connector) and **–RTN B** (positive connector) on backplane of shelf.

   Requirement: Voltage must be between –40.00 V and –60.0 V DC

9. Was requirement met?

   If **YES**, continue with **Step 10**.
   If **NO**, proceed to **Step 13**.

10. Reinstall **SYSCTL**.

11. You can safely remove one fuse as required, if power is maintained to the shelf through the other fuse.

12. **STOP. YOU HAVE COMPLETED THIS PROCEDURE**.

13. Trouble in User Panel, power feeder(s), or office battery distribution. If User Panel needs to be replaced, see **DLP-502**.

    If you need assistance, notify your supervisor, your local technical support organization, or call Lucent Technologies RTAC, per local operating instructions.

14. **STOP. YOU HAVE COMPLETED THIS PROCEDURE**.

Activate Optional System Features Using CIT

1. Connect CIT to **CIT** connector on User Panel and establish session.

   Reference: **DLP-521**

2. Refer to the Commands and Reports section of this user/service manual for the descriptions and syntax of the various optional features and parameters of the DDM-2000 that may be set using the CIT (see Tables A and B). These optional features and parameters can be found under numerous listings.

   The following lists optional features which may be lost if the **SYSCTL** is replaced:

`ent-tl1msgmap`	Maps the DDM-2000 TL1 message types to the operations systems (OS) for this network element in the subnetwork. Users may change the default mapping by using this command. Users may check the current provisioning by using the **`rtrv-tl1msgmap`** command.
`ent-ulsdcc-l3`	Provisions the user-settable fields in Layer 3 of the OSI stack. Layer 3 parameters include user-settable fields of the network service access point (NSAP) address and the enabling of the Level-2 Routing. Command parameters should **not** be changed from default values except by users who intend to provision the SONET subnetwork and partition DCC communications.
`ent-ulsdcc-l4`	Provisions the user-settable fields in Layer 4 of the OSI stack. Layer 4 parameters are used to enter TARP Manual Adjacencies specifying a NE to be logically adjacent to local NE. Command parameters should **not** be changed from default values except by users who intend to provision the SONET subnetwork and partition DCC communications.
`set-attr-alm`	Sets alarm holdoff and clear delay.
`set-attr-env`	Names and sets alarm level of miscellaneous discrete input points at RT only.
`set-attr-cont`	Names miscellaneous discrete control output points at RT only.
`set-date`	Sets date and time.

`set-fecom`	Enables or disables far end communication (DCC/LAN) over the data communication channel and sets Network Side/User Side parameters.
`set-lgn`	Enters, edits, and deletes logins and passwords. Privileged users can change other users' passwords by using this command.
`set-link`	Sets length of page output on the CIT.
`set-ne`	Sets the name [Target Identifier (TID)] of the network element. Designates a shelf as an alarm gateway network element (AGNE) and sets alarm group numbers. Designates the Shelf numbers and designates the Central Office/Remote Terminal parameter. Sets the Idle Channel Signal parameter.
`set-passwd`	Sets or changes a users' password. All users can change their own passwords.
`set-pmthres-line`	Sets the thresholds of the line performance parameters. Also enables or disables the processing of the threshold crossings for these performance parameters.
`set-pmthres-sect`	Sets the thresholds of the section performance parameters. Also enables or disables the processing of the threshold crossings for these performance parameters.
`set-pmthres-t1`	Sets the thresholds of the DS1 performance parameters. Also enables or disables the processing of the threshold crossings for these performance parameters.
`set-pmthres-t3`	Sets the thresholds of the DS3 performance parameters. Also enables or disables the processing of the threshold crossings for these performance parameters.
`set-pmthres-sts1`	Sets the STS-1 path performance parameter thresholds. Available only in Release 2 or later software.
`set-pmthres-vt1`	Sets the thresholds of the VT1.5 path performance parameters. Also enables or disables the processing of the threshold crossings for these performance parameters.

`set-secu`	Sets security on each CIT port and DCC interface. Enabling security requires users to enter login and password to access the system.
`set-sync`	Sets synchronization mode switching to revertive or nonrevertive. After the end-to-end system is established, sets synchronization source to select the line from which shelf loop-timing and/or the DS1 sync output will be derived. Sets output mode to select the source of the DS1 sync output.

Other optional features are set from the CIT but are not lost if the **SYSCTL** is replaced.

CAUTION:
Execution of these commands may be service affecting.

These features may be found under the following listings:

`ent-crs-sts1`	Specifies STS-1 cross-connect routing. Used in establishing service and/or performing transmission tests.
`ent-crs-sts3c`	Specifies STS-3c cross-connect routing. Used in establishing service and/or performing transmission tests.
`ent-crs-vt1`	Specifies VT1.5 (DS1) cross-connect routing. Used in establishing service and/or performing transmission tests.
`set-ec1`	Sets the characteristics of an EC-1 port.
`set-feat`	Enables feature options that are licensed for use: sts3c, vtpm, ds1pm.
`set-oc1`	Sets the characteristics of a OC-1 line. Sets the signal degrade threshold of the OC-1 line as a bit error rate (BER).
`set-oc3`	Sets the characteristics of an OC-3 line pair. Sets the signal degrade threshold of the OC-3 line as a bit error rate (BER). Specifies if sync message signaling uses kbyte or sbyte or is enabled or disabled. Specifies if the concatenation mode (concat) of the OC-3 line is to be independent STS-1 channels or an sts-3c channel.

`set-oc12`	Sets the characteristics of an OC-12 line pair. Sets the signal degrade threshold of the OC-12 line as a bit error rate (BER). Specifies if sync message signaling uses kbyte or sbyte or is enabled or disabled.
`set-state-oc1`	Sets the state of OC-1 line(s) to be monitored (IS) for a good signal or not monitored (NMON).
`set-state-ec1`	Sets the state of a low-speed EC-1 port to be automatically monitored (AUTO) for a good signal or not monitored (NMON).
`set-state-t1`	Sets the state of a low-speed port to be automatically monitored (AUTO) for a good signal or not monitored (NMON).
`set-state-t3`	Sets the state of a DS3 port to be automatically monitored (AUTO) for a good signal or not monitored (NMON).
`set-state-sts1`	Sets the state of a STS-1 channel to be automatically monitored (AUTO) for a good signal or not monitored (NMON).
`set-state-vt1`	Sets the state of a VT1.5 channel to be automatically monitored (AUTO) for a good signal or not monitored (NMON).
`set-sts1`	Sets the signal degrade characteristics of an STS-1 channel.
`set-t1`	Sets the characteristics of a DS1 port.
`set-t3`	Sets the characteristics of a DS3 port.
`set-vt1`	Sets the signal degrade characteristics of a VT1.5 channel.

3. Determine options required from office records.

4. Set options using the syntax of the Commands and Reports section in this manual.

5. **STOP. YOU HAVE COMPLETED THIS PROCEDURE**.

Table A – DDM-2000 FiberReach Parameters Provisionable Via the CIT

Parameter	Range	Default (Note 1)	Command (Note 2)
Date	current value	70-01-01	**set-date**
Time	current value	00:00:00	**set-date**
Target ID (system name)	20 characters	LT-DDM-2000	**set-ne**
Remote NE Status	enabled,disabled		**set-ne**
Alarm Group	1-255	255	**set-ne**
Alarm Gateway NE	yes,no	no	**set-ne**
Shelf number	1-8	1	**set-ne**
Idle channel signal	STS Uneqpd./AIS insert	AIS	**set-ne**
	VT Uneqpd./AIS insert	AIS	
CO/RT select	CO, RT	RT	**set-ne**
CIT page length	0 (pager off), 3-150 rows	24	**set-link**
PM thresholds	See PM Table	-	**set-pmthres**
Alarm holdoff delay	0-30 sec	2	**set-attr-alm**
Alarm clear delay	0-30 sec	15	**set-attr-alm**
Power minor almn. level	MN, MJ	MN	**set-attr-alm**
OC1 degrade threshold	10^{-5} to 10^{-9}	10^{-6}	**set-oc1**
AIS almn. level of NSA OC-1			
Line AIS	CR, MJ, MN, NA	NA	**set-oc1**
OC3 degrade threshold	10^{-5} to 10^{-9}	10^{-6}	**set-oc3**
Sync messaging	K byte, S byte, disabled	K byte	**set-oc3**
AIS almn. level of NSA OC-3			
Line AIS	CR, MJ, MN, NA	NA	**set-oc3**
DccMode	distinct,identical	distinct	**set-oc3**
Application	0x1,1+1	1+1	**set-oc3**
OC12 degrade threshold§§§	10^{-5} to 10^{-9}	10^{-6}	**set-oc12**
Sync messaging§§§	K byte, S byte, disabled	K byte	**set-oc12**
AIS almn. level of NSA OC-12			
Line AIS§§§	CR, MJ, MN, NA	NA	**set-oc12**
DccMode	distinct,identical	distinct	**set-oc12**
STS-1 path signal degrade threshold†††	10^{-5} to 10^{-9}	10^{-6}	**set-sts1**
Signal fail alarm threshold	10^{-3} to 10^{-6}	10^{-3}	**set-sts1**
NSA STS-1 path AIS alarm level	MN, NR	MN	**set-sts1**
SA STS-1 path AIS alarm level	CR, MN, NA, NR	MN	**set-sts1**
STS-1 channel state***	NMON, AUTO‡	AUTO	**set-state-sts1**
OC-1 line state‡‡‡	NMON, IS	IS	**set-state-oc1**

See notes and footnotes at end of table.

Table A – DDM-2000 FiberReach Parameters Provisionable Via the CIT (Contd)

Parameter	Range	Default (Note 1)	Command (Note 2)
VT1.5 path signal degrade threshold***	10^{-5} to 10^{-9}	10^{-6}	**set-vt1**
NSA VT path AIS	MN, NR	MN	**set-vt1**
SA VT path AIS	MJ, MN, NA, NR	MJ for ring MN for linear	**set-vt1**
VT channel state***	NMON, AUTO‡	AUTO	**set-state-vt1**
DS3 VMR mode†	VMR, VM, clear channel	VMR	**set-t3†**
Clear channel DS3 AIS insertion†	yes, no	no	**set-t3†**
DS3 sig failure alm. level†	CR, MJ, MN, NA	CR	**set-t3†**
DS3 failure threshold†	10^{-3}, 10^{-6} BER	10^{-3}	**set-t3†**
DS3 PM mode†	off, on	on	**set-t3†**
DS3 PM frame†	m13, cbit	m13	**set-t3†**
DS3 PM format†	pbit, fmbit, cpbit	pbit	**set-t3†**
DS3 port state†	NMON, AUTO‡	AUTO	**set-state-t3†**
DS1 line coding†	AMI,B8ZS,noOverride§	noOverride	**set-t1†**
DS1 alarm level†	MJ, MN, NA	NA	**set-t1†**
DS1 failure threshold†	10^{-3}, 10^{-6}, 10^{-7}, 10^{-8} BER	10^{-3}	**set-t1†**
DS1 BPV to LOS†	yes,no	no	**set-t1†**
DS1 AIS insertion†	yes, no	yes	**set-t1†**
DS1 PM Mode†	off, on	off	**set-t1**
DS1 PM Format†	sf, esf, esfn	esf	**set-t1**
DS1 primary port state†	NMON, AUTO‡	AUTO	**set-state-t1†**
Environmental alarm level	CR, MJ, MN, NA	MN	**set-attr-env**
Environmental alarm type	10 characters		**set-attr-env**
Environmental alarm description	26 characters		**set-attr-env**
Control point description	26 characters		**set-attr-cont**
Far end communication over DCC**	enabled,disabled	enabled	**set-fecom****
DCC identity for OSI ntwks.	userside, networkside	see command pgs.	**set-fecom****
Porttype	cit,tl1 synch,asynch	cit synch	**set-secu****
Baudrate	1200,2400,4800,9600,19200	9600	**set-secu****
Echo	enabled,disenabled	enabled	**set-secu****
CIT/DCC security**	enabled,disabled,lockout	disabled	**set-secu****
CIT/DCC timeout (minutes)**	0-120	15	**set-secu****
SYNC mode switching	revertive, nonrevertive	revertive	**set-sync**
Sync Timing Source††‡‡	main-1, main-2, fn-c	main-1	**set-sync**
Sync Output Mode§§	¶ track, lock1, lock2	track	**set-sync**
AIS Threshold	level 5, level 4, level 3. level 2	level 5	**set-sync**
Auto. sync. reconfig.	enabled, disabled	disabled	**set-sync**
EC-1 alarm level†	CR, MJ, MN, NA	CR	**set-ec1**
EC-1 degrade threshold†	10^{-5} to 10^{-9} BER	10^{-6}	**set-ec1**
EC-1 port state†	NMON, AUTO‡	AUTO	**set-state-ec1**

See notes and footnotes at end of table.

Table A – DDM-2000 FiberReach Parameters Provisionable Via the CIT (Contd)

Parameter	Range	Default (Note 1)	Command (Note 2)
Feature package **	STS3C, VT PM, or DS1 PM		**set-feat**
Action	enabled, disabled	disabled	**set-feat**
NSAP structure			
Organization ID (Operator ID)	6 hex digits	000000	**ent-ulsdcc-l3**
Reserved (Reserved)	4 hex digits	0000	**ent-ulsdcc-l3**
Routing Data (Domain)	4 hex digits	00000000	**ent-ulsdcc-l3**
Routing Data (Area)	4 hex digits	00000000	**ent-ulsdcc-l3**
Level 2 IS routing	enable or disable	disable	**ent-ulsdcc-l3**
NSAP structure			
TARP lifetime	1 to 65535	100	**ent-ulsdcc-l4**
NSAP system ID	12 hex digits	none	**ent-ulsdcc-l4**
NSAP organization ID	6 hex digits	see command pgs.	**ent-ulsdcc-l4**
NSAP reserved field	4 hex digits	see command pgs.	**ent-ulsdcc-l4**
NSAP routing domain field	4 hex digits	see command pgs.	**ent-ulsdcc-l4**
NSAP routing area field	4 hex digits	see command pgs.	**ent-ulsdcc-l4**
TARP timer T1	1 to 3600 secs.	15 secs.	**ent-ulsdcc-l4**
TARP timer T2	1 to 3600 secs.	25 secs.	**ent-ulsdcc-l4**
TARP timer T3	1 to 3600 secs.	40 secs.	**ent-ulsdcc-l4**
TARP timer T4	1 to 3600 secs.	20 secs.	**ent-ulsdcc-l4**
TARP loop detection flush timer	1 to 1440 mins.	5 mins.	**ent-ulsdcc-l4**
TARP data cache	enable or disable	enable	**ent-ulsdcc-l4**
NSAP system identifier	12 hex digits	see command pgs.	**ent-ulsdcc-l4**
TARP data cache			**ent-ulsdcc-l4**
TARP system tid	20 characters	see command pgs.	**ent-ulsdcc-l4**
Target identifier	20 characters		**ent-ulsdcc-l4**
TARP organization id	6 hex digits	000000	**ent-ulsdcc-l4**
TARP reserved	4 hex digits	see command pgs.	**ent-ulsdcc-l4**
TARP routing domain	4 hex digits	see command pgs.	**ent-ulsdcc-l4**
TARP area field	4 hex digits	see command pgs.	**ent-ulsdcc-l4**
OS type (ACID)	see command pgs.		**ent-osacmap**
ACID (OS type or funct.)	see command pgs.		**ent-tl1msgmap**
TL1 message type	see command pgs.		**ent-tl1msgmap**
Action to assoc. message type to OS	enabled, disabled	enabled	**ent-tl1msgmap**
Cross-connection type	twoway, dc, locked	twoway	**ent-crs-sts1**
Ring ID for drop&continue	m1, m2	see command pgs.	**ent-crs-sts1**
Cross-connection type	twoway, dc, locked	twoway	**ent-crs-vt1**
Ring ID for drop&continue	m1, m2	see command pgs.	**ent-crs-vt1**

See notes and footnotes at end of table.

Table A – DDM-2000 FiberReach Parameters Provisionable Via the CIT (Contd)

Parameter	Range	Default (Note 1)	Command (Note 2)
Cross-connection type	twoway	twoway	`ent-crs-sts3c`
Expected STS-1 path trace message	62 characters	see command pgs.	`set-trace-sts1`
Outgoing STS-1 path trace message	62 characters	see command pgs.	`set-trace-sts1`

Notes:

1. Default means factory default (the CIT prompts display current provisioned values).
2. To view the current values, precede these commands with `rtrv-` instead of `set-`

† Parameter can be set for each port.
‡ AUTO means the port or channel is ready to be automatically provisioned via signal detection.
§ noOverride means read and use switch settings on circuit pack.
¶ Track means the source for timing will be selected from the active received OC-3 line specified.
** This command is available to privileged users only.
†† Rings.
‡‡ Setting this parameter also affects DS1 output source and DS1 sync output mode. See set-sync command in Section 11, "Commands and Reports".
*** Parameters can be set for each channel.
††† Ring releases. Requires **26G-U/26G2-U/28G-U/28G2-U/29G-U/29H-U OLIU**s.
‡‡‡ Ring releases.
§§§ With **29G-U/29H-U OLIU**s in MAIN slots.

Table B – DDM-2000 OC-3 Performance Monitoring Parameters Provisionable Via the CIT

Parameter Definition		Threshold Range [Default]		Command
Facility	**Measure**	**Current Quarter Hour**	**Current Day**	**set-pmthres-**
OC-12 Section†	SE Frame Seconds (SEFS)	1-63[10]	1-4095[30]	**sect**
OC-3 Section	SE Frame Seconds (SEFS)	1-63[10]	1-4095[30]	**sect**
OC-1 Section	SE Frame Seconds (SEFS)	1-63[10]	1-4095[30]	**sect**
OC-12 Line†	B2 Coding Violations (CV)	1-55365[5537]	1-5315040[531504]	**line**
	B2 Errored Seconds (ES)	1-900[40]	1-65535[900]	**line**
	B2 Errored Seconds Type A (ESA)	1-900[30]	1-65535[90]	**line**
	B2 Errored Seconds Type B (ESB)	1-900[30]	1-65535[90]	**line**
	B2 Severely Errored Seconds (SES)	1-63[20]	1-4095[60]	**line**
	B2 Unavailable Seconds (UAS)	1-63[30]	1-4095[90]	**line**
	Line Protection Switch Counts (PSC-L)	1-63[2]	1-255[4]	**line**
	STS Pointer Justification (PJC)	1-65535[60]	1-9999999[5760]	**line**
OC-3 Line	B2 Coding Violations (CV)	1-13841[1384]	1-1328736[132874]	**line**
	B2 Errored Seconds (ES)	1-900[40]	1-65535[900]	**line**
	B2 Errored Seconds Type A (ESA)	1-900[30]	1-65535[90]	**line**
	B2 Errored Seconds Type B (ESB)	1-900[30]	1-65535[90]	**line**
	B2 Severely Errored Seconds (SES)	1-63[20]	1-4095[60]	**line**
	B2 Unavailable Seconds (UAS)	1-63[30]	1-4095[90]	**line**
	Line Protection Switch Counts (PSC-L)	1-63[2]	1-255[4]	**line**
	STS Pointer Justification (PJC)	1-65535[60]	1-9999999[5760]	**line**
OC-1 Line	B2 Coding Violations (CV)	1-4613[461]	1-442848[44285]	**line**
	B2 Errored Seconds (ES)	1-900[40]	1-65535[900]	**line**
	B2 Errored Seconds Type A (ESA)	1-900[30]	1-65535[90]	**line**
	B2 Errored Seconds Type B (ESB)	1-900[30]	1-65535[90]	**line**
	B2 Severely Errored Seconds (SES)	1-63[20]	1-4095[60]	**line**
	B2 Unavailable Seconds (UAS)	1-63[30]	1-4095[90]	**line**
	STS Pointer Justification (PJC)	1-65535[60]	1-9999999[5760]	**line**
EC-1 Line	B2 Coding Violations (CV) EC-1	1-4613[461]	1-442848 [44285]	**line**
	B2 Errored Seconds (ES)	1-900[40]	1-65535[900]	**line**
	B2 Errored Seconds Type A (ESA)	1-900[30]	1-65535[90]	**line**
	B2 Errored Seconds Type B (ESB)	1-900[30]	1-65535[90]	**line**
	B2 Severely Errored Seconds (SES)	1-63[20]	1-4095[60]	**line**
	B2 Unavailable Seconds (UAS)	1-63[30]	1-4095[90]	**line**
	STS Pointer Justification (PJC)	1-65535[60]	1-9999999[5760]	**line**
STS-1 Path	B3 Coding Violations (CV)	1-4510[451]	1-432960 [43296]	**sts1**
	B3 Errored Seconds (ES)	1-900[40]	1-65535[900]	**sts1**
	B3 Errored SecondsType A (ESA)	1-900[30]	1-65535[90]	**sts1**
	B3 Errored SecondsType B (ESB)	1-900[30]	1-65535[90]	**sts1**
	B3 Severely Errored Seconds (SES)	1-63[20]	1-4095[60]	**sts1**
	B3 Unavailable Seconds (UAS)	1-63[30]	1-4095[90]	**sts1**

See footnotes at end of table.

Table B – DDM-2000 OC-3 Performance Monitoring Parameters Provisionable Via the CIT (Contd)

Parameter Definition		Threshold Range [Default]		Command
Facility	**Measure**	**Current Quarter Hour**	**Current Day**	**set-pmthres-**
Enhanced DS3 Path for P-Bits, F&M-Bits, and C-Bits from Fiber and DSX	CV-P Coding Violations	1-16383[40]	1-1048575[3820]	**t3**
	ES-P Errored Seconds	1-900[25]	1-65535[250]	**t3**
	SES-P Severely Errored Seconds	1-63[4]	1-4095[40]	**t3**
	UAS-P Unavailable Seconds	1-63[10]	1-4095[10]	**t3**
	SEFS	1-63[2]	1-4095[8]	**t3**
DS3 Line	CV-L Coding Violations	1-16383[40]	1-1048575[3865]	**t3**
	Errored Seconds, Line (ES-L)	1-900[25]	1-65535[250]	**t3**
	Severely Errored Seconds, Line (SES-L)	1-63[4]	1-4095[40]	**t3**
VT1.5 Path	V5 Errored Seconds (ES)	1-900 [40]	1-65535 [900]	**vtl**
	V5 Severely Errored Seconds (SES)	1-63[20]	1-4095 [60]	**vtl**
	V5 Unavailable Seconds (UAS)	1-63[30]	1-4095 [90]	**vtl**
DS1 Path	ES-P Errored Seconds	1-900[65]	1-65535 [648]	**tl**
	SES-P Severely Errored Seconds	1-63[10]	1-4095 [100]	**t1**
	UAS-P Unavailable Seconds	1-63[10]	1-4095 [10]	**t1**
	ES-PFE Errored Seconds	1-900[65]	1-65535 [648]	**t1**
	SES-PFE Severely Errored Seconds	1-63[10]	1-4095 [100]	**t1**
	UAS-PFE Unavailable Seconds	1-63[10]	1-4095 [10]	**t1**
	CV-P (SF) Coding Violations	1-16383[72]	1-1048575 [691]	**t1**
	CV-P (ESF) Coding Violations	1-16383[13296]	1-1048575 [132960]	**t1**
	CV-PFE Coding Violations	1-16383[13296]	1-1048575 [132960]	**t1**
DS1 Line	ES-L Line Errored Seconds	1-900[65]	1-65535 [648]	**tl**

* Threshold is set once for both current quarter hour and current day.
† Applicable only when using the **29G-U/29H-U OLIU** in **MAIN** slots.

Set Circuit Pack Options

1. **NOTE:**
When a replacement circuit pack (except the **SYSCTL**) is configured the same as the original circuit pack, it may be inserted with no further action. When a replacement circuit pack is different (different code or different switch options) from the original, the **SYSCTL UPD/INIT** button must be momentarily depressed (or use the "update" command) to update the inventory.

Find the circuit pack in Table A and go to the indicated step. If you were sent here from another procedure, return to that procedure after setting options.

Table A – Circuit Packs

Circuit Pack	Step
BBG8/BBG8B SYSCTL	Step 2
22D-U/22F-U/22F2-U OLIU*	—
22G2-U/22G3-U/22G4-U OLIU*	—
26G-U/26G2-U OLIU*	—
28G-U/28G2-U OLIU*	—
29G-U/29H-U OLIU*	—
BBF1/BBF1B DS1	Step 7
BBF3/BBF3B DS1PM	Step 7
BBF6 T1EXT	Step 11
BBF8 HDSL	Step 13
BBG4/BBG4B/BBG19 DS3	Step 16

* There are no option switches on these circuit packs.

BBG8/BBG8B SYSCTL

2. **NOTE:**
   There are no **SYSCTL** user selectable options. All switch settings are addressed in **Steps 4** and **5**.

   Determine the desired **SYSCTL** option switch settings from office records and see Figure 1.

3. **NOTE:**
   To set switch to **ON**, depress rocker or slide switch toward side labeled **ON** in the figure. To set switch to **OFF**, depress rocker or slide switch toward side labeled **OFF** in the figure.

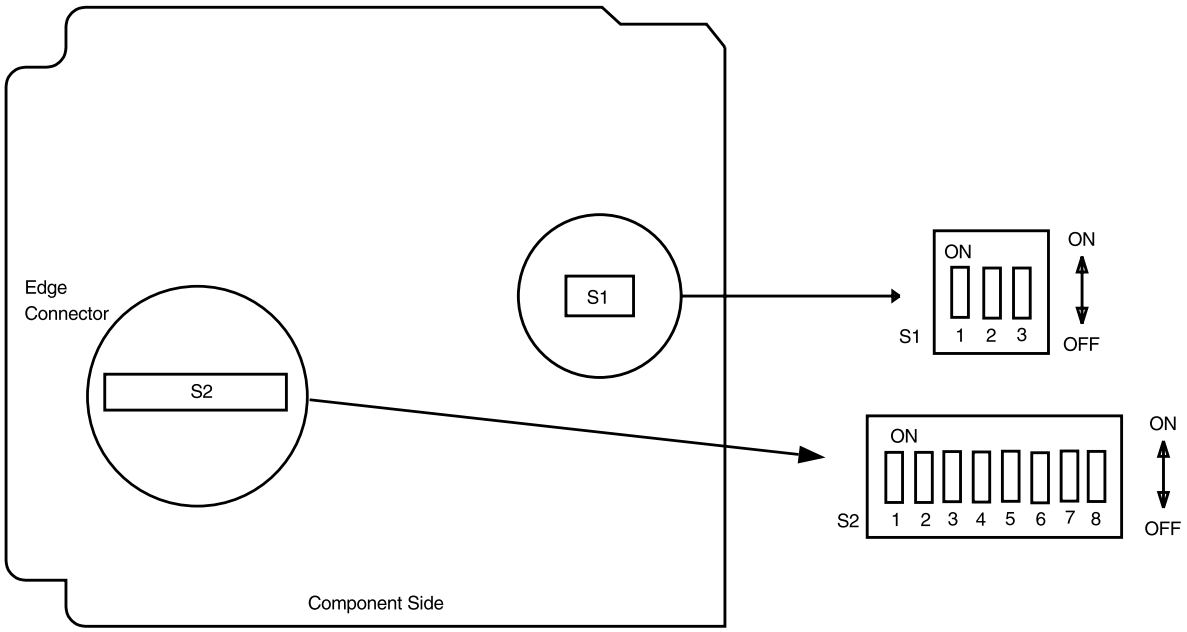

Figure 1. SYSCTL Option Settings

4. Set **SYSCTL** switch **S1** sections **S1-1**, **S1-2**, and **S1-3** to **OFF**, to set the product (shelf) type.

5. Set **SYSCTL** switch **S2** sections **S2-1** and **S2-2** to **OFF** and **S2-3**, **S2-4**, **S2-5**, **S2-6**, **S2-7**, and **S2-8** to **ON**, to enable the DCC channel. (Switch **S2-2** is unused.)

6. **STOP. YOU HAVE COMPLETED THIS PROCEDURE**.

BBF1/BBF1B DS1/BBF3/BBF3B DS1PM

7. Determine from office records the length of the DS1 cabling between the DDM-2000 and the DSX-1 cross-connect point.

8. **NOTE:**
   Switch 1, sections 1 through 3 (**S1-1**, **S1-2**, **S1-3**), are set according to the length of DS1 cabling between the DDM-2000 and the DSX-1 cross-connection. Switch 1, sections 4 through 7 (**S1-4**, **S1-5**, **S1-6**, **S1-7**), are set for the type of line coding (B8ZS or AMI) required of the DS1 signal. Switch 1, section 8 (**S1-8**) is unused and ignored by the system.

   NOTE:
   To set switch to ON, depress rocker or slide switch toward side labeled **ON** in the figure. To set switch to OFF, depress rocker or slide switch toward side labeled **OFF** in the figure.

   Refer to Table B and Figure 2 and set LBO option switches.

Table B – DS1/DS1PM Cable LBO Settings (Note)

613C (608C) Cable Length (feet)	1249C Cable Length (feet)	Other Cable dB Loss at 772 kHz	Switch S1 Settings		
			S1-1	S1-2	S1-3
0 to 133	0 to 90	0 to 0.6	OFF	OFF	OFF
>133 to 267	>90 to 180	>0.6 to 1.2	OFF	OFF	ON
>267 to 400	>180 to 270	>1.2 to 1.8	OFF	ON	OFF
>400 to 533	>270 to 360	>1.8 to 2.4	OFF	ON	ON
>533 to 655	>360 to 450	>2.4 to 2.8	ON	OFF	OFF

Note: Invalid switch settings will cause the **FAULT** LED to light and a `DS1 CP failed` alarm.

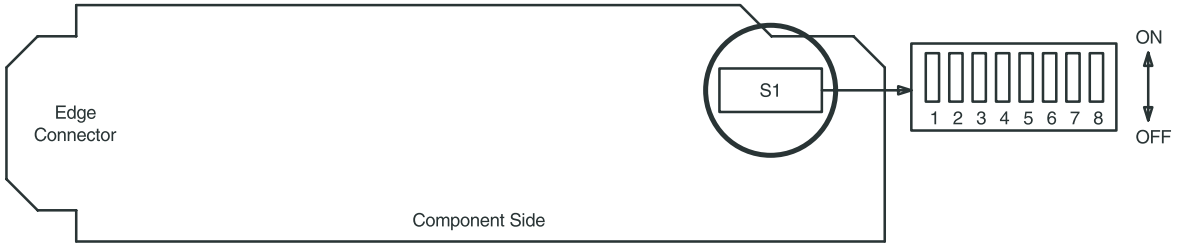

Figure 2. DS1/DS1PM Option Settings

9. **NOTE:**
It is recommended that a policy be established to set line coding either using the option switches OR using the **`set-t1:`** command. If line code (lc) parameters are set using the **`set-t1:`** command, the circuit pack switch settings will have no effect. The **`rtrv-t1:`** command may be used to check line code settings.

Refer to Table C and Figure 2 and set the line code option switches, if required.

Table C – DS1/DS1PM Line Code Settings

	Switch S1 Settings				
Line Code Format	**S1-4 (Port 1)**	**S1-5 (Port 2)**	**S1-6 (Port 3)**	**S1-7 (Port 4)**	**S1-8 (Note)**
B8ZS	OFF	OFF	OFF	OFF	OFF
AMI	ON	ON	ON	ON	

Note: Switch 1, section 8 (**S1-8**) is unused and ignored by the system.

10. **STOP. YOU HAVE COMPLETED THIS PROCEDURE**.

BBF6 T1EXT

11. **CAUTION:**
In addition to primary lightning protection, an external Lightning and Surge Secondary Protection Assembly (ED-8C783-30 or equivalent) is required for **T1EXT** *circuits used in outside plant applications.*

NOTE:
To set switch to ON, depress rocker or slide switch toward side labeled **ON** in the figure. To set switch to OFF, depress rocker or slide switch toward side labeled **OFF** in the figure.

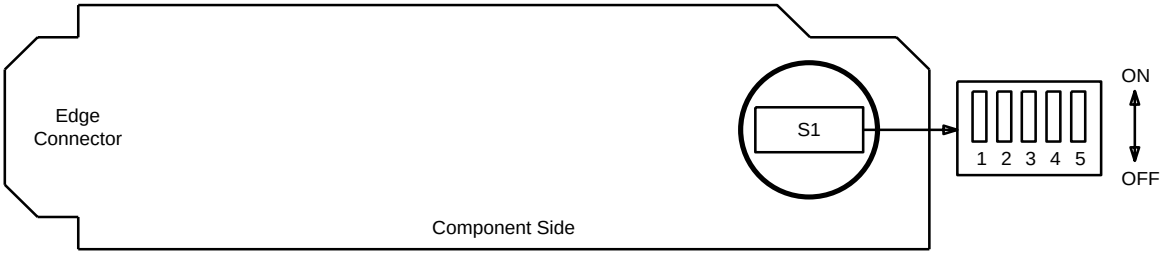

Figure 3. T1EXT Option Settings

NOTE:
It is recommended that a policy be established to set line coding either using the option switches or using the **`set-t1`** command. If line code (lc) parameters are set using the **`set-t1`** command, the circuit pack switch settings will have no effect. The **`rtrv-t1`** command may be used to check line code settings.

Refer to Table D and Figure 3 and set the line code option switches, if required.

Table D – T1EXT Line Code Settings (Note)

Line Code Format	Switch S1 Settings				
	S1-1 (Port 1)	S1-2 (Port 2)	S1-3 (Unused)	S1-4 (Unused)	S1-5 (Unused)
B8ZS	OFF	OFF	OFF	OFF	OFF
AMI	ON	ON			

Note: Switch 1, section 3 (**S1-3**), section 4 (**S1-4**), and section 5 (**S1-5**) must be set to **OFF**.

12. **STOP. YOU HAVE COMPLETED THIS PROCEDURE**.

BBF8 HDSL

13. Determine circuit pack option switch settings from office records or work order.

14. Set **HDSL** option switches per Table E and Figure 4.

Table E – HDSL Control Switch Settings

Control Settings	Switch S1 Settings			
	S1-1	S1-2	S1-3	S1-4
Master	—	OFF	—	OFF
Slave	—	ON	—	ON
Local	OFF	—	OFF	—
Remote	ON	—	ON	—

15. **STOP. YOU HAVE COMPLETED THIS PROCEDURE.**

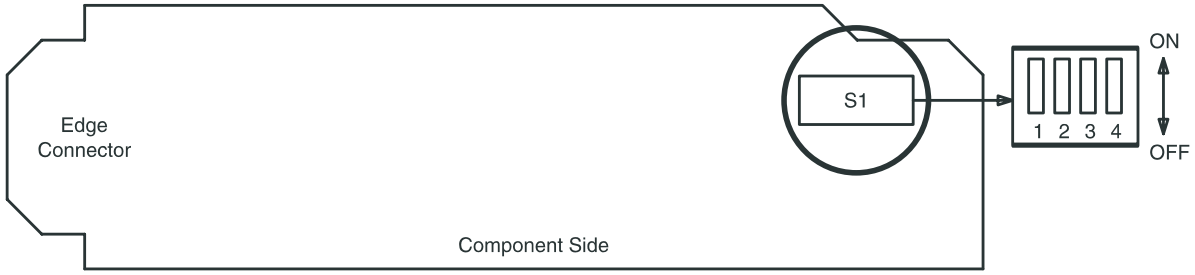

Figure 4. HDSL Control Switch

16. Determine from office records the length of the DS3 cabling between the **DDM-2000** and the **DSX-3** cross-connect point.

17. **NOTE:**
    The only option settings on the **DS3** circuit pack are the LBO settings shown in Figure 5. If there are other jumpers on the circuit pack similar to the LBO jumpers, they are factory test points and should be ignored.

    Refer to Table F and Figure 5 and install the DS3 option jumpers.

Table F – DS3 LBO Settings

Cable Length (Ft)		LBO Settings
734D	**735A**	
0 to 225	0 to 125	LBO IN (ON)
>225 to 450	>125 to 250	LBO OUT

18. **STOP. YOU HAVE COMPLETED THIS PROCEDURE.**

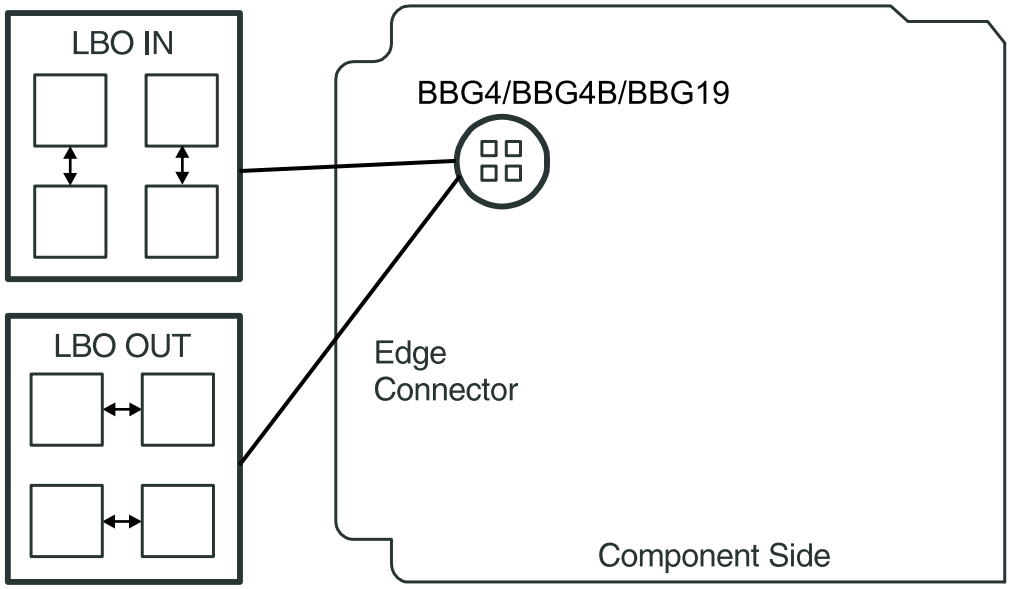

Figure 5. DS3 Option Settings

Perform Optical Fiber Connections and Verification of Optical Facility

1. **WARNING:**
   Unterminated optical connectors may emit invisible laser radiation. Avoid direct exposure to the beam. Do not view beam with optical instruments. Use of controls or adjustments or performance of procedures other than those specified herein may result in hazardous radiation exposure.

   CAUTION:
   When handling optical pigtails or jumpers, take care to keep bending radius as large as possible.

   NOTE:
   This procedure is used to connect OC-1, OC-3, or OC-12 optical fiber spans. For each span, determine the loss of each optical fiber and install the proper LBO. Then connect the fibers to the associated **IN** and **OUT** connectors of each **OLIU** at the end of the span.

   NOTE:
   It is assumed that the optical jumpers used to connect the DDM-2000 FiberReach Wideband Terminal to an optical interconnection point are equipped with SC, FC, or *ST*® lightguide cable connectors.

   If the optical cables have not been placed into the cable tray at the bottom front of the shelf, loosen three screws holding the front cover of the cable tray and slide out the front cover of the tray.

2. Route the optical jumpers up through the slotted hole(s) at the bottom left-front corner of the shelf and up to the **OLIU**s. See Table A.

Table A – Single-Mode Lightguide Jumpers

Code	Comcode	Length (Feet)	Connectors
FS1E-E-2	105357727	2	*ST-ST*
FS1E-E-10	105357768	10	*ST-ST*
FS1E-E-25	105357800	25	*ST-ST*
FS1E-E-50	105357859	50	*ST-ST*
FS1E-E-100	105357875	100	*ST-ST*
FS1E-A-2	105420905	2	*ST*-2016A Biconic
FS1E-A-10	105420947	10	*ST*-2016A Biconic
FS1E-A-25	105423958	25	*ST*-2016A Biconic
FS1E-A-50	105424006	50	*ST*-2016A Biconic
FS1E-A-100	105424022	100	*ST*-2016A Biconic
LS1SC-SC-2	106908247	2	SC-SC
LS1SC-SC-10	106908270	10	SC-SC
LS1SC-SC-25	106908304	25	SC-SC
LS1SC-SC-50	106908346	50	SC-SC
LS1SC-SC-100	106908395	100	SC-SC
LS1FP-FP-10	106593825	10	FCPC-FCPC
LS1FP-FP-25	106932908	25	FCPC-FCPC
LS1FP-FP-50	106932916	50	FCPC-FCPC
LS1FP-FP-100	106932924	100	FCPC-FCPC

3. Establish communication with technician at other end of the optical span.

4. **NOTE:**
The optical connector labeled **OUT** is the output from the **OLIU**. The optical connector labeled **IN** is the input to the **OLIU**.

NOTE:
26G-U/26G2-U OLIUs and **27G-U/27G2-U OLIU**s require single-mode optical fiber; however, multimode cable can be used for short connections. **22F-U/22F2-U/22G2-U/22G3-U/22G4-U OLIU**s require single-mode optical fiber; however, multimode cable can be used for short connections. **22D-U OLIU**s and FT-2000 **LAA5 IS3** Optical Interface require multimode optical fibers. **28G-U/28G2-U OLIU**s and FT-2000 **LAA10/LAA10B OC3** Optical Interface require single-mode optical fibers; however miltimode cable can be used for short connections. **29G-U/29H-U OLIU**s and FT-2000 **T939A OC12** Optical Interface require single-mode optical fibers. **28G-U/28G2-U OLIU**s and

WaveStar 2.5G/10G **LEY15/LEY16** OC3/STM1 Port Unit require single-mode optical fibers. **29G-U/29H-U OLIU**s and WaveStar 2.5G/10G **LEY13/LEY14** OC12/STM4 Port Unit require single-mode optical fibers.

NOTE:
Optical fibers connecting this shelf with a far end shelf should not be connected to the **OLIU** until at least 45 seconds after an optical loopback is removed.

NOTE:
It may take from 15 seconds to 3 minutes and 25 seconds for the **FAULT** LEDs to stop flashing after the cables are connected, depending on the setting of the OC-1 signal degrade threshold (–5 to –9).

NOTE:
The single-mode to single-mode (SM-SM) LBOs are installed on the **OUT** buildout block of the **OLIU**. The single-mode to multimode (SM-MM) or multimode to multimode (MM-MM) LBOs are installed on the **IN** buildout block of the **OLIU**.

Remove protective covers from transmit optical jumper cables and lightguide buildout(s) [LBO(s)] and clean SC, FC, or *ST* connectors and LBO(s).

Reference: **DLP-527**

5. Have you determined the value of the LBOs for this span?

   If **YES**, proceed to **Step 9**.

   If **NO**, continue with **Step 6**.

Optical Power Measurement

SUMMARY: Steps 6 through **9** are used to measure optical power. Replace LBOs with 0 dB LBOs per Figure 1. Connect the optical fiber transmit cable to the **OLIU OUT** connection. Measure the optical power of the optical fiber receive cables at the other ends using an optical power meter.

6. At both ends of the optical span, replace the SC, FC, or *ST* LBOs with 0 dB LBOs per Figure 1 [**DLP-503**].

7. **NOTE:**
   This single-homed OC-1 ring configuration requires that the **FN ( )-1 OLIU** on the OC-3 shelf connect to the **MAIN-1 OLIU** at the first FiberReach shelf from the OC-3 shelf. The **MAIN-2 OLIU** at the FiberReach shelf on the OC-1 ring connects to **FN ( )-2(P) OLIU** on the host OC-3 shelf.

NOTE:
A dual-homed OC-1 ring configuration requires that the first FiberReach **MAIN-1 OLIU** connect to **FN ( )-1 OLIU** on one host OC-3 shelf. The last FiberReach **MAIN-2 OLIU** connects to the **FN ( )-2(P) OLIU** on the other host OC-3 shelf. Intermediate FiberReach shelves on the same OC-1 ring connect from **MAIN-2 OLIU** at one FiberReach shelf to the **MAIN-1 OLIU** at an adjacent FiberReach shelf (node).

NOTE:
For DDM-2000 OC-3 or OC-12 ring configurations, optical fibers extend in two different directions to make up the ring. At each shelf (node) in the ring, the OC-3/OC-12 shelf **MAIN 1[MAIN-B-1] OLIU** will connect to the FiberReach **MAIN-2 OLIU** in another node , and the OC-3/OC-12 **MAIN 2(P)[MAIN-B-2(P)] OLIU** will connect to the FiberReach **MAIN-1 OLIU** in a separate node.

NOTE:
This single-homed OC-3 ring or linear extension to OC-12 node configuration requires that the **FN ( )-1 OLIU** on the OC-12 shelf connect to the **MAIN-1 OLIU** at the FiberReach shelf from the OC-12 shelf. The **MAIN-2 OLIU** at the FiberReach shelf on the OC-3 ring or linear extension connects to **FN ( )-2(P) OLIU** on the host OC-12 shelf.

NOTE:
A dual-homed OC-3 ring to OC-12 node configuration requires that the first FiberReach **MAIN-1 OLIU** connect to **FN ( )-1 OLIU** on one host OC-12 shelf. Intermediate FiberReach shelves on the same OC-3 ring connect from **MAIN-2 OLIU** at one FiberReach shelf to the **MAIN-1 OLIU** at an adjacent FiberReach shelf (node). The last FiberReach **MAIN-2 OLIU** connects to the **FN ( )-2(P) OLIU** on the other host OC-12 shelf.

NOTE:
This single-homed OC-3/OC-12 ring or linear extension to FT-2000 node configuration requires that the **LS INTFC** slots **1A** thru **8A** on the host FT-2000 shelf connect to the **MAIN-1 OLIU** at the FiberReach shelf from the FT-2000 shelf. The **MAIN-2 OLIU** at the FiberReach shelf on the OC-3/OC-12 ring or linear extension connects to companion **LS INTFC** slots **1B** thru **8B** on the host FT-2000 shelf.

NOTE:
A dual-homed OC-3/OC-12 ring to FT-2000 node configuration requires that the first FiberReach **MAIN-1 OLIU** connect to any **LS INTFC** slots **1A** thru **8B** on one host FT-2000 shelf. Intermediate FiberReach shelves on the same OC-3/OC-12 ring connect from **MAIN-2 OLIU** at one FiberReach shelf to the **MAIN-1 OLIU** at an adjacent FiberReach shelf (node). The last FiberReach **MAIN-2 OLIU** connects to any **LS INTFC** slots **1B** thru **8B** on the other host FT-2000 shelf.

NOTE:
This single-homed OC-3/OC-12 ring or linear extension to WaveStar 2.5G/10G node configuration requires that the **Port Units 1** thru **16** on the host WaveStar 2.5G/10G shelf connect to the **MAIN-1 OLIU** at the FiberReach shelf from the WaveStar 2.5G/10G shelf. The **MAIN-2 OLIU** at the FiberReach shelf on the OC-3/OC-12 ring or linear extension connects to companion **Port Units 1** thru **16** on the host WaveStar 2.5G/10G shelf.

NOTE:
A dual-homed OC-3/OC-12 ring to WaveStar 2.5G/10G node configuration requires that the first FiberReach **MAIN-1 OLIU** connect to **Port Units 1** thru **16** on host WaveStar 2.5G/10G shelf. Intermediate FiberReach shelves on the same OC-3/OC-12 ring connect from **MAIN-2 OLIU** at one FiberReach shelf to the **MAIN-1 OLIU** at an adjacent FiberReach shelf (node). The last FiberReach **MAIN-2 OLIU** connects to any **Port Units 1** thru **16** on the other host WaveStar 2.5G/10G shelf.

At each end of the span, connect the optical fiber transmit cables to the **OLIU OUT** connections.

8. At each end of the span, measure the optical power of the optical fiber receive cables using an optical power meter.

9. Replace the LBO assemblies (if required) with the correct buildout assemblies per Figures 1, 2, 3, 4, 5, and 6 and Tables B, C, D, E, F, G, H, I, J, K, L, and/or M [**DLP-503**].

   Reconnect the optical fiber transmit cables at both ends.

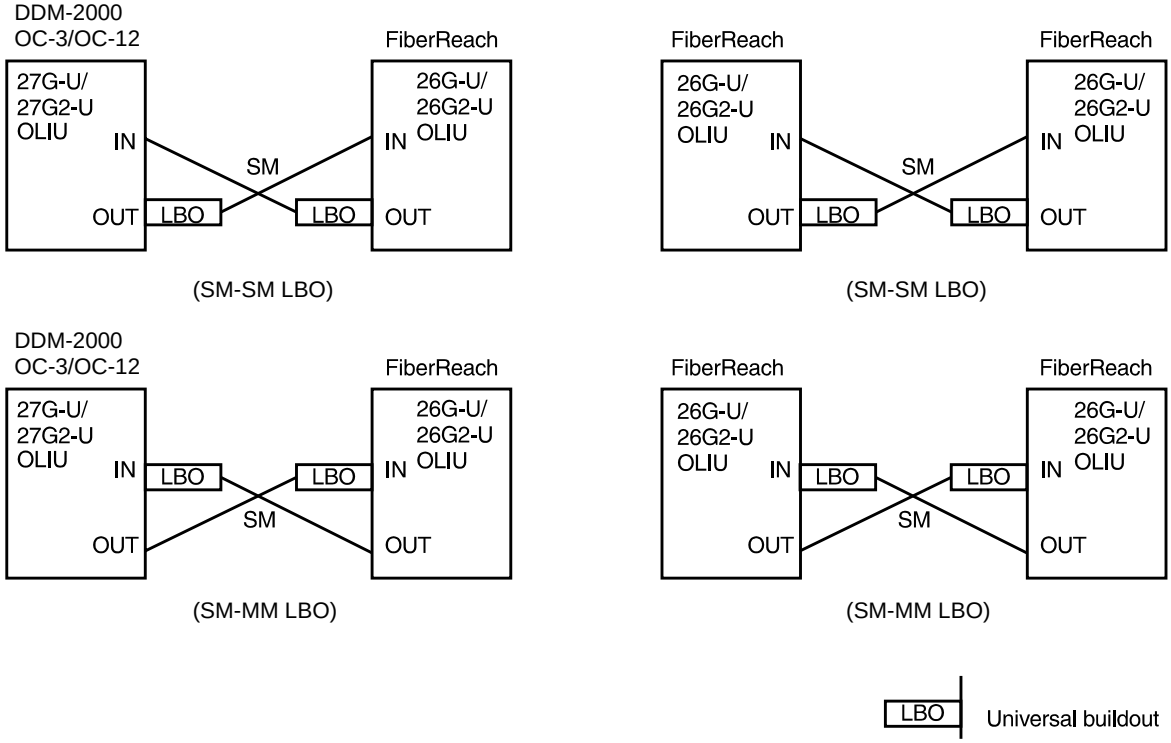

Figure 1 – DDM-2000 FiberReach Operating at OC-1 Rate to DDM-2000 OC-3 Shelf Fiber Optic Connections and Line Buildouts

Table B – DDM-2000 FiberReach OC-1 to DDM-2000 OC-3 Shelf Measured Optical Power and Required Lightguide Buildouts (LBOs)

	Receiver			
	26G-U/26G2-U OLIU (DDM-2000 FiberReach)		27G-U/27G2-U OLIU (DDM-2000 OC-3)	
Transmitter	**Received Power(dBm)**	**LBO (dB)**	**Received Power(dBm)**	**LBO (dB)**
26G-U/26G2-U OLIU (FiberReach/ DDM-2000 OC-3)	0.0 to -5.0	15	0.0 to -5.0	15
	-5.0 to -10.0	10	-5.0 to -10.0	10
	-10.0 to -15.0	5	-10.0 to -15.0	5
	-15.0 to -31.0	0	-15.0 to -31.0	0
27G-U/27G2-U OLIU (DDM-2000)	0.0 to -5.0	15		
	-5.0 to -10.0	10		
	-10.0 to -15.0	5		
	-15.0 to -31.0	0		

Notes:

1. Measured power is defined to be the measured power of the light emitted from receive fiber connector at OLIU.
2. The minimum measured received power allows for optical path penalty and unallocated margin. Connector loss is not allotted for; it should already be accounted for in the optical power measurement.
3. The margin for falling within the max rx power is 1.0 dB

Table C – Universal Single-Mode (SM-SM or SM-MM) *ST* Lightguide Buildouts

Lightguide Buildout (LBO)	Code	Comcode	Connector Type	Fiber Connection	Color
0 dB	A3070	106795354	*ST*	SM-SM & MM-MM	White
5 dB	A3070B1	107406183	*ST*	SM-SM	Yellow
10 dB	A3070D1	107406191	*ST*	SM-SM	Yellow
15 dB	A3070F1	107406209	*ST*	SM-SM	Yellow
5 dB	ASTS5	108053091	*ST*	SM-SM	Green
10 dB	ASTS10	108053190	*ST*	SM-SM	Green
15 dB	ASTS15	108053240	*ST*	SM-SM	Green
5 dB	ASTM5	108052960	*ST*	SM-MM	Beige
10 dB	ASTM10	108052994	*ST*	SM-MM	Beige
15 dB	ASTM15	108053018	*ST*	SM-MM	Beige

Table D – Universal Single-Mode (SM-SM or SM-MM) FC Lightguide Buildouts

Lightguide Buildout (LBO)	Code	Comcode	Connector Type	Fiber Connection	Color
0 dB	A3080	106795404	FC	SM-SM & MM-MM	White
5 dB	A3080B1	107406225	FC	SM-SM	Yellow
10 dB	A3080D1	107406233	FC	SM-SM	Yellow
15 dB	A3080F1	107406241	FC	SM-SM	Yellow
5 dB	AFCS5	108107095	FC	SM-SM	Green
10 dB	AFCS10	108107194	FC	SM-SM	Green
15 dB	AFCS15	108107244	FC	SM-SM	Green
5 dB	AFCM5	108107285	FC	SM-MM	Beige
10 dB	AFCM10	108107301	FC	SM-MM	Beige
15 dB	AFCM15	108107327	FC	SM-MM	Beige

Table E – Universal Single-Mode (SM-SM or SM-MM) SC Lightguide Buildouts

Lightguide Buildout (LBO)	Code	Comcode	Connector Type	Fiber Connection	Color
0 dB	A3060	106708951	SC	SM-SM & MM-MM	Blue
5 dB	A3060B1	107406142	SC	SM-SM	Yellow
10 dB	A3060D1	107406159	SC	SM-SM	Yellow
15 dB	A3060F1	107406167	SC	SM-SM	Yellow
5 dB	ASCS5	108314501	SC	SM-SM	Green
10 dB	ASCS10	108314600	SC	SM-SM	Green
15 dB	ASCS15	108440538	SC	SM-SM	Green
5 dB	ASCM5	108440579	SC	SM-MM	Beige
10 dB	ASCM10	108440595	SC	SM-MM	Beige
15 dB	ASCM15	108440611	SC	SM-MM	Beige

Table F – Universal Multimode (MM-MM) *ST* Lightguide Buildouts

Lightguide Buildout (LBO)	Code	Comcode	Connector Type	Fiber Connection	Color
5 dB	A2070B	106795313	*ST*	MM-MM	White
10 dB	A2070D	106795321	*ST*	MM-MM	White
15 dB	A2070F	106795339	*ST*	MM-MM	White

Table G – Universal Multimode (MM-MM) SC Lightguide Buildouts

Lightguide Buildout (LBO)	Code	Comcode	Connector Type	Fiber Connection	Color
5 dB	A2060B	106795271	SC	MM-MM	Blue
10 dB	A2060D	106795289	SC	MM-MM	Blue
15 dB	A2060F	106795297	SC	MM-MM	Blue

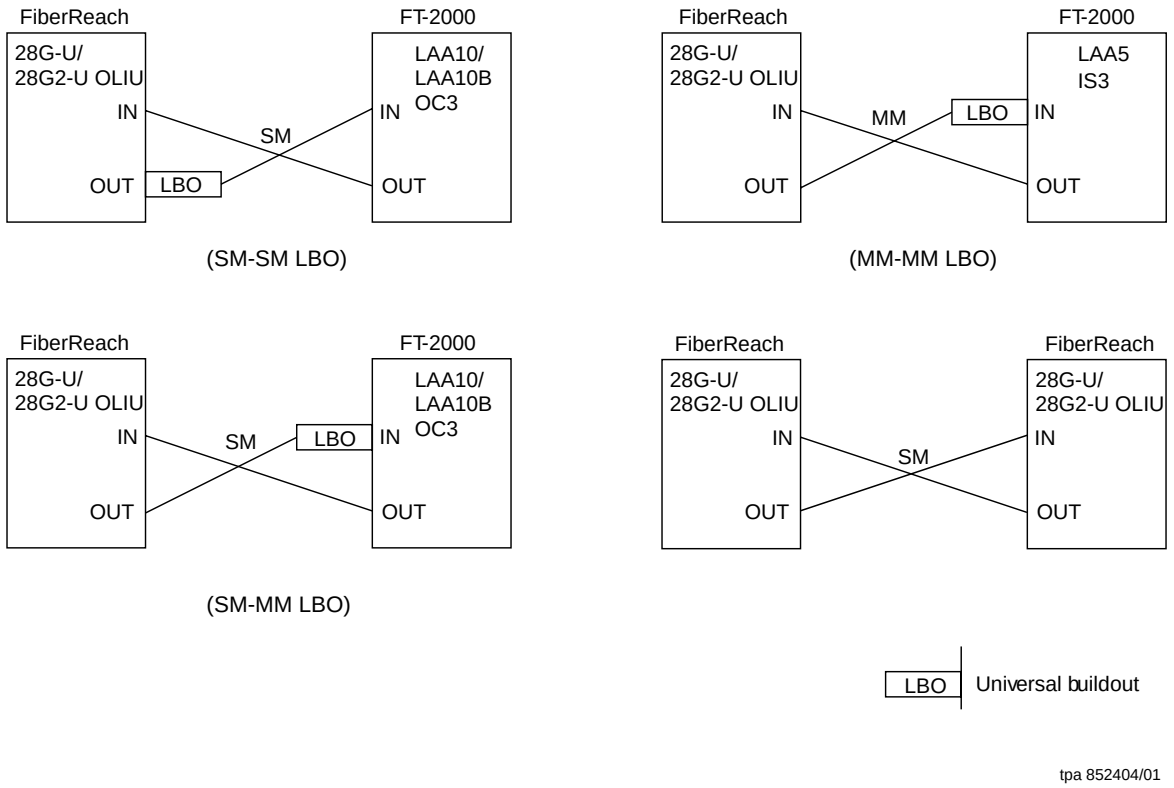

Figure 2 – DDM-2000 FiberReach Operating at an OC-3 Rate to FT-2000 LS INTFC Fiber Optic Connections and Line Buildouts

Table H – DDM-2000 FiberReach Operating at an OC-3 Rate to FT-2000 LS INTFC Measured Optical Power and Required LBO

	Receiver					
	LAA10 OC3 (FT-2000)		LAA5 OC3 (FT-2000)		28G-U/28G2-U OLIU	
Transmitter	**Received Power (dBm)**	**LBO (dB)**	**Received Power (dBm)**	**LBO (dB)**	**Received Power (dBm)**	**LBO (dB)**
LAA10/LAA10B OC3 (FT-2000)						
					-7.0 to -34.0	0
LAA5 IS3 (FT-2000)						
					-14.0 to -15.0	5
					-15.0 to -34.0	0
28G-U/28G2-U OLIU			0.0 to -5.0	15		
	0.0 to -3.0	10	-5.0 to -10.0	10		
	-3.0 to -8.0	5	-10.0 to -15.0	5		
	-8.0 to 34.0	0	-15.0 to -30.8	0		

Notes

1. Measured power is defined to be the measured power of the light emitted from receive fiber connector at OLIU.
2. The minimum measured received power allows for optical path penalty and unallocated margin. Connector loss is not allotted for; it should already be accounted for in the optical power measurement.
3. The margin for falling within the maximum rx power is 1.0 dB.

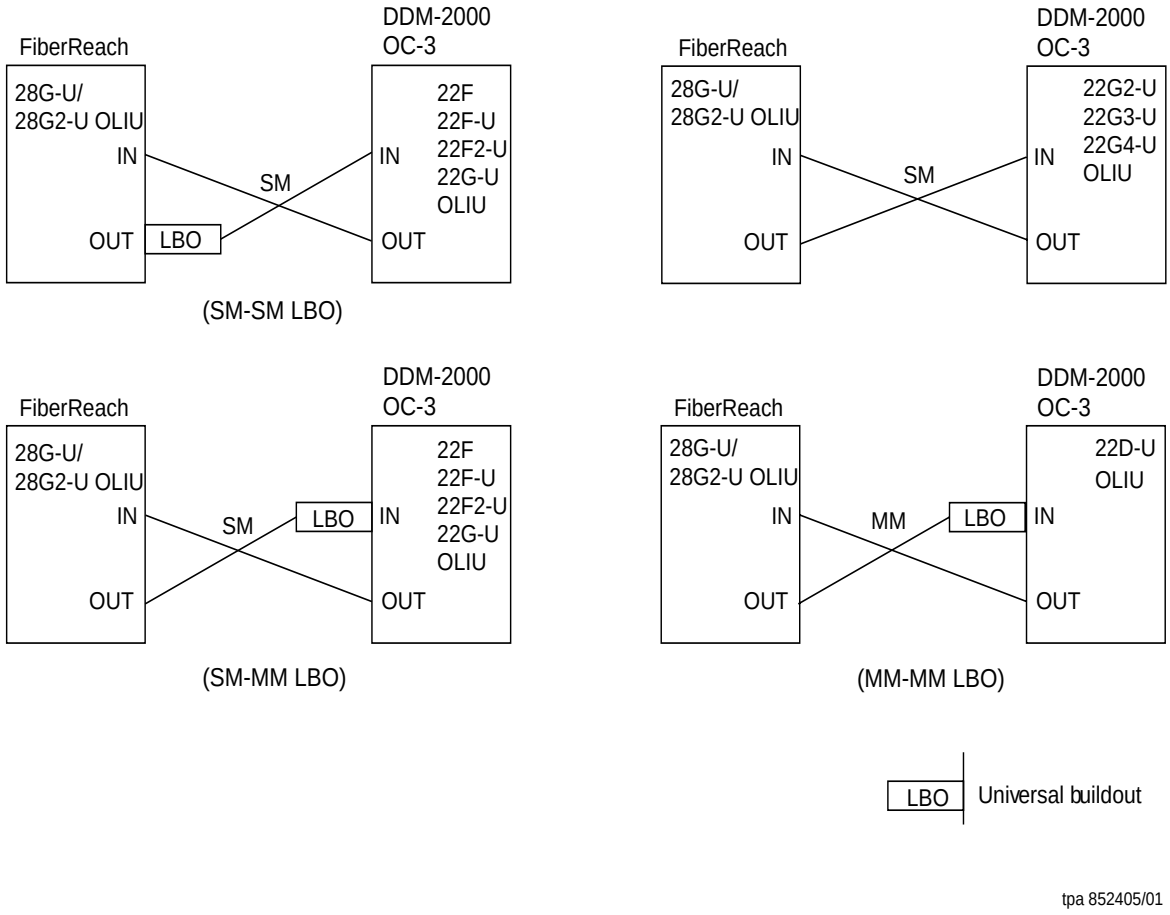

Figure 3 – DDM-2000 FiberReach Operating at an OC-3 Rate to DDM-2000 OC-3 Shelf Fiber Optic Connections and Line Buildouts

Table I – DDM-2000 FiberReach Operating at an OC-3 Rate to DDM-2000 OC-3 Shelf Measured Optical Power and Required LBO

DDM-2000 OC-3 to DDM-2000 FiberReach Operating at an OC-3 Rate Measured Optical Power and Required LBO

	Receiver									
	28G-U 28G2-U OLIU		22F OLIU 22F-U OLIU 22F2-U OLIU 22G-U OLIU		22G2-U OLIU 22G3-U OLIU 22G4-U OLIU		22D-U OLIU (Controlled Env.)		22D-U OLIU (Uncontrolled Env.)	
Transmitter	Received Power(dBm)	LBO (dB)	Received Power(dBm)	LBO (dB)	Received Power(dBm)	LBO (dB)	Received Power(dBm)	LBO (dB)	Received Power(dBm)	LBO (dB)
28G-U/28G2-U OLIU							0.0 to -5.0	15	0.0 to -5.0	15
			0.0 to -3.0	10			-5.0 to -10.0	10	-5.0 to -10.0	10
			-3.0 to -8.0	5			-10.0 to -15.0	5	-10.0 to -15.0	5
	0.0 to -34.0	0	-8.0 to -34.0	0	0.0 to -34.0	0	-15.0 to -33.8	0	-15.0 to -31.8	0
22F/22F-U/22F2-U OLIU										
	-8.0 to -34.0	0								
22G-U/22G2-U/22G3-U/ 22G4-U OLIU										
	0.0 to -34.0	0								
21D/21D-U/22D-U OLIU (Controlled & Uncontrolled Env.) (MM Fiber Only)										
	-14.0 to -34.0	0								

Notes:

1. Measured power is defined to be the measured power of the light emitted from receive fiber connector at OLIU
2. The minimum measure receive power allowed for optical path penalty and unallocated margin. Connector loss is not allotted for, it should already be accounted for in the optical power measurement.
3. The margin for falling within the max rx power is 1.0 dB.

tpa 852408/01

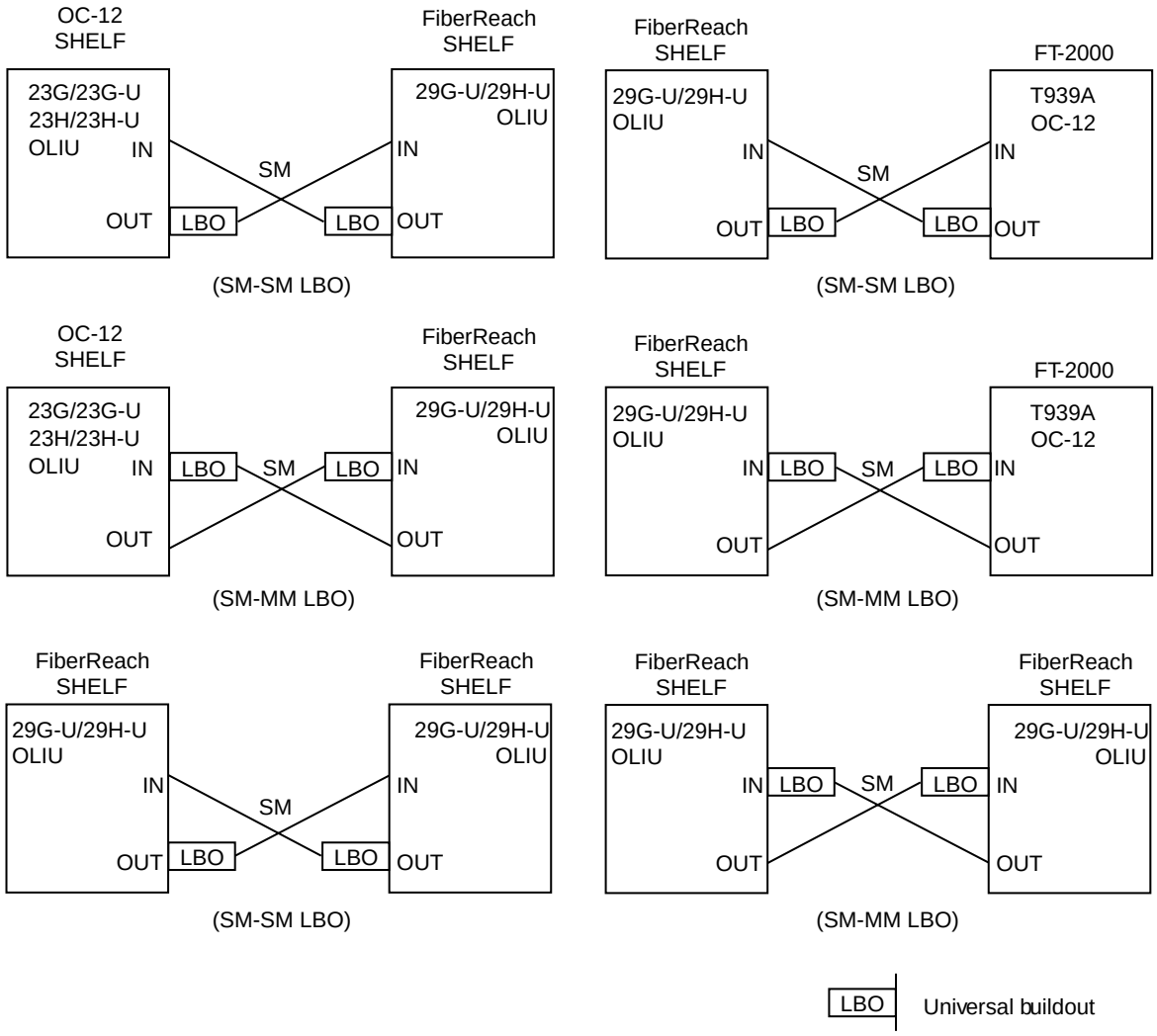

Figure 4 – DDM-2000 FiberReach Operating at OC-12 Rate to OC-12 Shelf or FT-2000 OC-12 LS INTFC Fiber Optic Connections and Line Buildouts

Table J – DDM-2000 FiberReach Operating at OC-12 Rate to OC-12 Shelf or FT-2000 OC-12 LS INTFC Measured Optical Power and Required LBO

	Receiver			
	T939A OC12 (FT-2000)		29G-U/29H-U OLIU (FiberReach Shelf)	
Transmitter	Received Power(dBm)	LBO (dB)	Received Power(dBm)	LBO (dB)
T939A OC12 (FT-2000)				
			2.0 to 1.0	15
			1.0 to –4.0	10
			–4.0 to –9.0	5
			–9.0 to –31.0	0
29G-U/29H-U OLIU (FiberReach Shelf)				
	2.0 to 1.0	15	2.0 to 1.0	15
	1.0 to –4.0	10	1.0 to –4.0	10
	–4.0 to –9.0	5	–4.0 to –9.0	5
	–9.0 to –31.0	0	–9.0 to –31.0	0

Notes:
1. Measured power is defined to be the measured power of the light emitted from receive fiber connector at OLIU.
2. The minimum measured received power allows for optical path penalty and unallocated margin. Connector loss is not allotted for; it should already be accounted for in the optical power measurement.
3. The margin for falling within the max rx power is 1.0 dB.

Table K – DDM-2000 FiberReach Operating at OC-12 Rate to OC-12 Shelf Measured Optical Power and Required LBO

	Receiver					
	29G-U/29H-U OLIU (FiberReach Shelf With OC-12 Optics)		23G/23G-U OLIU (OC-12 Shelf)		23H/23H-U OLIU (OC-12 Shelf)	
Transmitter	**Received Power(dBm)**	**LBO (dB)**	**Received Power(dBm)**	**LBO (dB)**	**Received Power(dBm)**	**LBO (dB)**
29G-U/29H-U OLIU (FiberReach Shelf With OC-12 Optics)					2.0 to –3.0	20
	2.0 to 1.0	15	2.0 to 1.0	15	–3.0 to –8.0	15
	1.0 to –4.0	10	1.0 to –4.0	10	–8.0 to –13.0	10
	–4.0 to –9.0	5	–4.0 to –9.0	5	–13.0 to –18.0	5
	–9.0 to –31.0	0	–9.0 to –31.0	0	–18.0 to –34.0	0
23G/23G-U OLIU (OC-12 Shelf)						
	2.0 to 1.0	15				
	1.0 to –4.0	10				
	–4.0 to –9.0	5				
	–9.0 to –31.0	0				
23H/23H-U OLIU (OC-12 Shelf)						
	2.0 to 1.0	15				
	1.0 to –4.0	10				
	–4.0 to –9.0	5				
	–9.0 to –31.0	0				

Notes:
1. Measured power is defined to be the measured power of the light emitted from receive fiber connector at OLIU.
2. The minimum measured received power allows for optical path penalty and unallocated margin. Connector loss is not allotted for; it should already be accounted for in the optical power measurement.
3. The margin for falling within the max rx power is 1.0 dB.

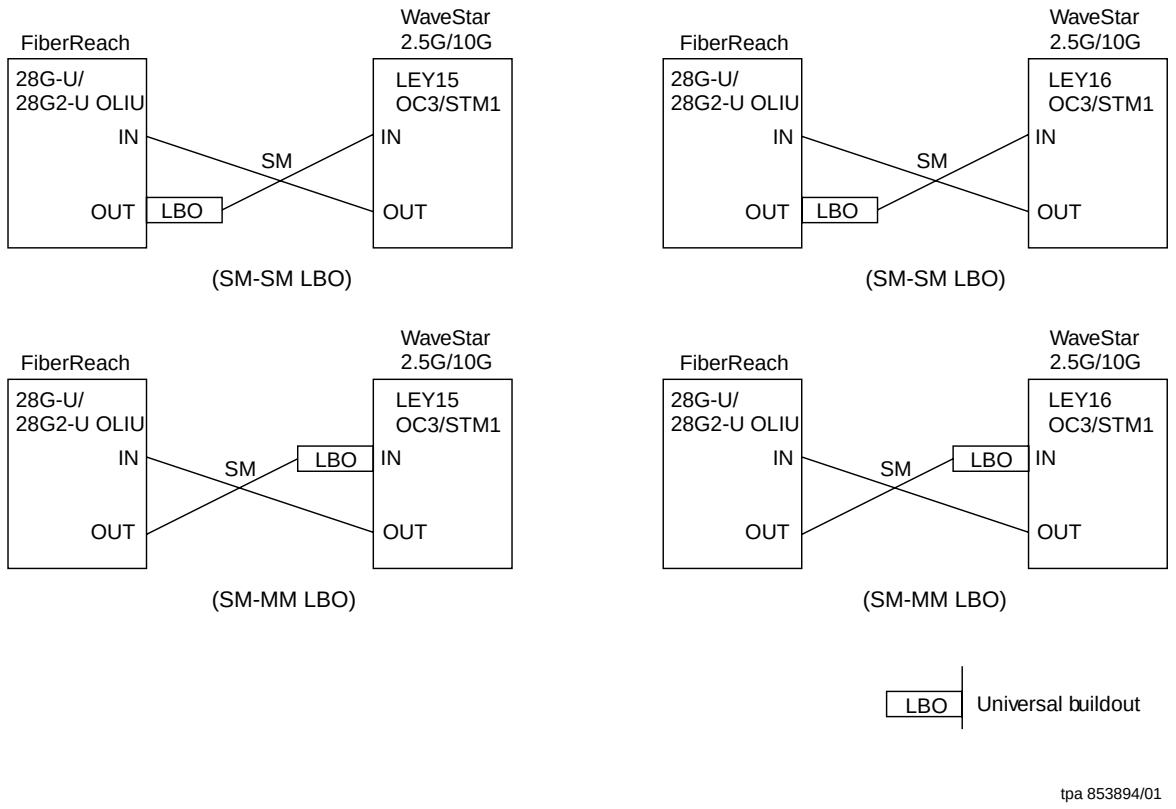

Figure 5 – DDM-2000 FiberReach Operating at an OC-3 Rate to WaveStar 2.5G/10G Fiber Optic Connections and Line Buildouts

Table L – DDM-2000 FiberReach Operating at an OC-3 Rate to WaveStar 2.5G/10G Port Units Measured Optical Power and Required LBO

	Receiver					
	LEY15 OC3/STM1 (WaveStar)		LEY16 OC3/STM1 (WaveStar)		28G-U/28G2-U OLIU	
Transmitter	**Received Power (dBm)**	**LBO (dB)**	**Received Power (dBm)**	**LBO (dB)**	**Received Power (dBm)**	**LBO (dB)**
LEY15 OC3/STM1 (WaveStar)						
					-7.0 to -34.0	0
LEY16 OC3/STM1 (WaveStar)						
					-14.0 to -15.0	5
					-15.0 to -34.0	0
28G-U/28G2-U OLIU	0.0 to -5.0	15	0.0 to -4.0	15		
	-5.0 to -10.0	10	-4.0 to -8.0	10		
	-10.0 to -15.0	5	-8.0 to -15.0	5		
	-15.0 to -29.5	0	-15.0 to -28.0	0		

Notes

1. Measured power is defined to be the measured power of the light emitted from receive fiber connector at OLIU.
2. The minimum measured received power allows for optical path penalty and unallocated margin. Connector loss is not allotted for; it should already be accounted for in the optical power measurement.
3. The margin for falling within the maximum rx power is 1.0 dB.

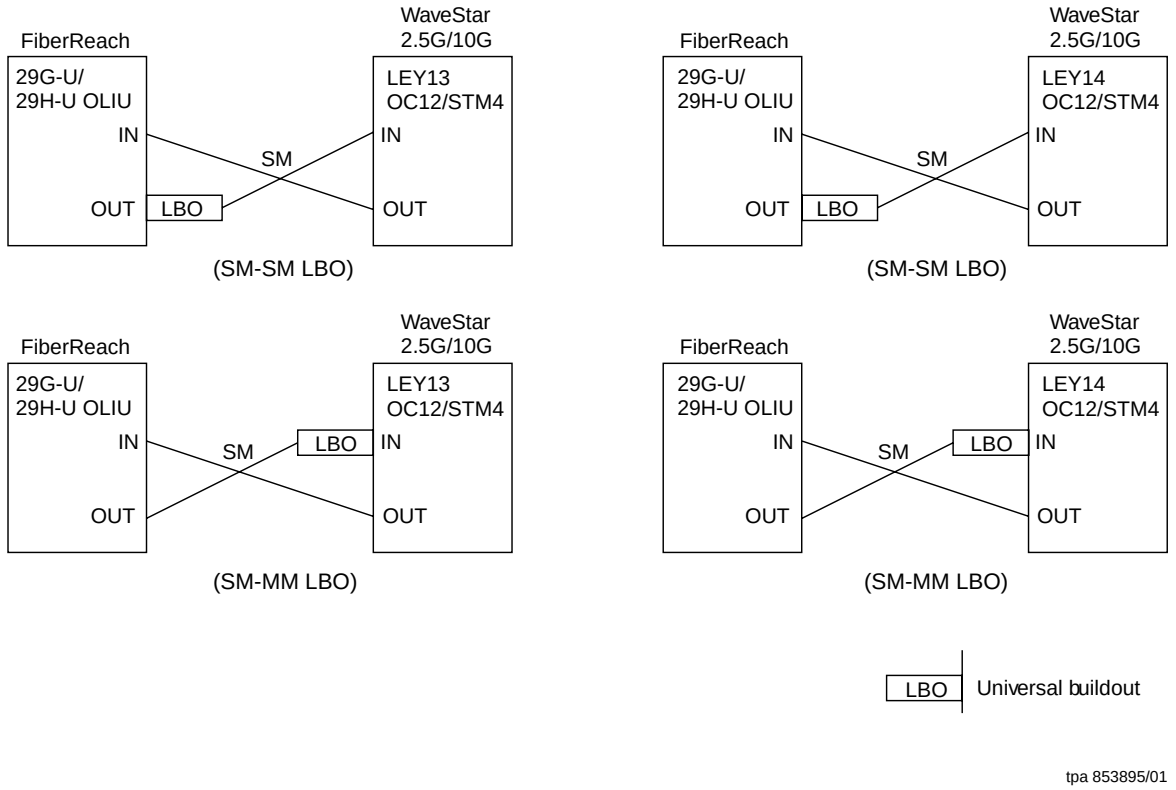

Figure 6 – DDM-2000 FiberReach Operating at an OC-12 Rate to WaveStar 2.5G/10G Fiber Optic Connections and Line Buildouts

Table M – DDM-2000 FiberReach Operating at an OC-12 Rate to WaveStar 2.5G/10G Measured Optical Power and Required LBO

	Receiver					
	LEY13 OC12/STM4 (WaveStar)		LEY14 OC12/STM4 (WaveStar)		29G-U/29H-U OLIU	
Transmitter	**Received Power (dBm)**	**LBO (dB)**	**Received Power (dBm)**	**LBO (dB)**	**Received Power (dBm)**	**LBO (dB)**
LEY13 OC12/STM4 (WaveStar)						
					-7.0 to -34.0	0
LEY14 OC12/STM4 (WaveStar)						
					-14.0 to -15.0	5
					-15.0 to -34.0	0
29G-U/29H-U OLIU	0.0 to -5.0	15				
	-5.0 to -10.0	10	0.0 to -3.0	10		
	-10.0 to -15.0	5	-3.0 to -8.0	5		
	-15.0 to -29.5	0	-8.0 to -28.0	0		

Notes

1. Measured power is defined to be the measured power of the light emitted from receive fiber connector at OLIU.
2. The minimum measured received power allows for optical path penalty and unallocated margin. Connector loss is not allotted for; it should already be accounted for in the optical power measurement.
3. The margin for falling within the maximum rx power is 1.0 dB.

Fiber Connection

10. At far end, connect the input optical fiber to the proper **OLIU IN** (receive) connector.

11. Did **FAULT** LED go off on the far-end **OLIU**?

    If **NO**, continue with **Step 12**.
    If **YES**, proceed to **Step 13**.

12. Check optical fiber connections. Verify integrity of fiber connections by ensuring correct output at one end is connected to correct input at the other end. Replace **OLIU** with flashing LED. Continue with this procedure when trouble is cleared.

13. At near end, connect the input optical fiber(s) to the corresponding **OLIU IN** (receive) connector.

14. Did **FAULT** LED go off on the near-end **OLIU**?

    If **NO**, continue with **Step 15**.
    If **YES**, proceed to **Step 16**.

15. Check optical fiber connections at both ends of the fiber. Verify the integrity of the fiber connections by ensuring **OLIU** output at one end is connected to the correct **OLIU** input at the other end. Verify proper systems have been connected by using the **`rtrv-map-neighbor`** command (Figures 8 and 9).

Fiber Verification

16. Disconnect the fiber cable from the **OUT** connector on the **OLIU** at one end of the span. At the other end, verify that the associated **FAULT** LED is flashing, indicating a loss of signal. Reconnect the fiber and repeat the process for the other direction of transmission.

17. Verify proper systems have been connected by using the **`rtrv-map-network`** and **`rtrv-map-neighbor`** command to retrieve a map of the network (Figures 7, 8, and 9).

```
/* Neighbor Map for Site6NE1
=================================================================
TID                          Product Type            Level 2 IS
NSAP
=================================================================
Site6NE1                     FiberReach
 39 840F 80 000000 0000 0000 0000 08006alad06e 00
R5
 39 840F 80 000000 0000 0000 0000 00000e3a0273 00
R6
 39 840F 80 000000 0000 0000 0000 00000e3a0273 00
R7
 39 840F 80 000000 0000 0000 0000 00000e3a0273 00
Site3NE1                                                Y
 39 840F 80 000000 0000 0000 0000 00000e3a0372 00
Site7NE1
 39 840F 80 000000 0000 0000 0000 08006alad06f 00

*/
```

Figure 7. Sample Report From `rtrv-map-network` Command

```
/* Network Map for Site6NE1
=================================================================
TID                  Connected Thru    Product Type    Level 2 IS
NSAP
=================================================================
Site6NE1                               FiberReach
 39 840F 80 000000 0000 0000 0000 08006alad06e 00
Site7NE1               main-1
 39 840F 80 000000 0000 0000 0000 08006a1ad06f 00
Site5NE1               main-2
 39 840F 80 000000 0000 0000 0000 00000e3a0372 00
*/
```

Figure 8. Sample Report From `rtrv-map-neighbor` Command (Release 3.0)

```
/* Network Map for Site6NE1
=======================================================================
TID                  Connected Thru    Product Type    Level 2 IS  DCC
NSAP
=======================================================================
Site6NE1                               FiberReach
 39 840F 80 000000 0000 0000 0000 08006alad06e 00
Site7NE1               main-1
 39 840F 80 000000 0000 0000 0000 08006a1ad06f 00
Site5NE1               main-2                          ?           N
 39 840F 80 000000 0000 0000 0000 00000e3a0372 00
*/
```

Figure 9. Sample Report From `rtrv-map-neighbor` Command (Release 3.1 and Later)

18. After all connections and tests have been made, verify optical fiber cables are placed correctly in fiber tray/rings and properly routed in bay framework. Reinstall front cover and tighten three screws.

19. Repeat this procedure for each fiber span to be connected until the end-to-end system is established.

20. **STOP. YOU HAVE COMPLETED THIS PROCEDURE**.

Perform End-to-End OC-1, OC-3, or OC-12 Optical Line Test

1. **WARNING:**
Unterminated optical connectors may emit invisible laser radiation. Aviod direct exposure to the beam. Do not view beam with optical instruments. Use of controls or adjustments or performance of procedures other than those specified herein may result in hazardous radiation exposure.

NOTE:
This test is used locally at the DDM-2000 FiberReach shelf to verify the integrity of the OC-1, OC-3, or OC-12 fiber lines between two DDM-2000 FiberReach shelves or between a DDM-2000 FiberReach shelf and a DDM-2000 OC-3 or OC-12 shelf and may be performed with the DDM-2000 in service or out of service.

NOTE:
It is assumed that each DDM-2000 has passed the local (looped) transmission tests and a CIT is available. If these tests have not been completed, refer to the appropriate procedure and perform the tests.

NOTE:
This test must be performed locally at each shelf location associated with the optical span(s) being tested. See Figure .

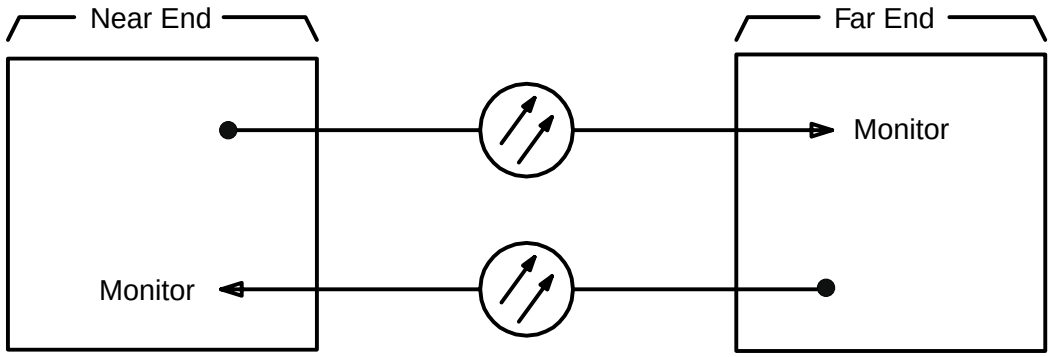

Figure 1. End-to-End Optical Line Test Monitoring

At test location, connect CIT to User Panel **CIT** connector and establish session.

Reference: **DLP-521**

2. **CAUTION:**
   The `init-pm:reg=all` *command initializes (clears) all current day and/or all current quarter-hour performance-monitoring storage registers.*

   NOTE:
   If local procedures prohibit you from doing the **`init-pm:reg=all`** command, you may perform the following in Steps 4 and 5. Use the **`rtrv-pm-line`** command to obtain the line performance monitoring status report, note the readings on the `Today` line in the report, wait 20 seconds, and then obtain another report. There should be no change in readings from the first report.

   Enter the command **`init-pm:reg=all`**, if allowed.

3. Wait 20 seconds.

4. Enter one of the following commands:

   - **`rtrv-pm-line:main-1`** if service OC-1, OC-3, or OC-12 line is being tested.
   - **`rtrv-pm-line:main-2`** if protection OC-1, OC-3, or OC-12 line is being tested.
   - **`rtrv-pm-line:main-all`** if both OC-1, OC-3, or OC-12 lines are being tested.
   - **`rtrv-pm-line:fn-1`** if service OC-3 line is being tested.
   - **`rtrv-pm-line:fn-2`** if protection OC-3 line is being tested.
   - **`rtrv-pm-line:fn-all`** if both OC-3 lines are being tested.

   Response: The following CIT report will indicate the status of the equipment. The `Today` line should indicate that there are no errors. Other `Time` lines may exist with numbers greater than zero. (The "Commands and Reports" section of this manual under **RTRV-PM-LINE** describes this report.)

```
/* Line Performance Monitoring Status Report
   Last initialized:  day registers at yy-mm-dd hh:mm:ss
                      quarter hour registers at yy-mm-dd hh:mm:ss
================================================================
Address  Start   B2 CV   B2 ES   B2 ES    B2 ES   B2 SES   B2 UAS
         Time                     Type A   Type B
================================================================
address   time    nn...   nn...    nn...    nn...   nn...    nn...
   .       .        .       .        .        .       .        .
   .       .        .       .        .        .       .        .
----------------------------------------------------------------
address   time    nn...   nn...    nn...    nn...   nn...    nn...
   .       .        .       .        .        .       .        .
   .       .        .       .        .        .       .        .
*/
```

tpa 852348-01

Figure 2. Sample Report From `rtrv-pm-line` Command

5. Has performance-monitoring report been obtained from all shelf locations associated with optical span(s) being tested?

   If **NO**, continue with **Step 6**.
   If **YES**, proceed to **Step 7**.

6. Repeat this procedure from Step 2 at other locations.

7. Did report indicate errors?

   If **YES**, continue with **Step 8**.
   If **NO**, **STOP. YOU HAVE COMPLETED THIS PROCEDURE**.

8. Trouble may be in optical fiber and/or connections. Trouble may also be in **OLIU**s. If the report indicated trouble when the report was obtained from the near end of the span, trouble may be in the receive direction (see Figure). If the report indicated trouble when the report was obtained from the far end of the span, trouble may be in the transmit direction. Check optical fiber and connections. Clean optical fiber connections [**DLP-527**]. If no trouble found in the optical fibers, replace **OLIU**(s) [**DLP-523**] associated with the address indicated in the report.

9. **STOP. YOU HAVE COMPLETED THIS PROCEDURE**.

Check Local Office Alarms

1. **CAUTION:**
   This test will interrupt service if it is performed without a CIT. If done with a CIT, this test can be performed on an in-service system.

   NOTE:
   It is assumed that you were sent here by another procedure to test the DDM-2000 FiberReach alarms.

   Is a CIT available?

   If **YES**, continue with **Step 2**.
   If **NO**, proceed to **Step 5**.

2. Connect CIT to **CIT** connector on the User Panel.

3. **NOTE:**
   The "Commands and Reports" section of this user's manual under **TEST-ALM** gives a description of the **`test-alm`** command.

   Use the **`test-alm`** command to perform alarm tests. Note the audible and visual alarm indications during the test.

4. Did the DDM-2000 FiberReach shelf pass the alarm tests?

   If **YES**, **STOP. YOU HAVE COMPLETED THIS PROCEDURE**.
   If **NO**, proceed to **Step 14**.

5. **NOTE:**
   It is assumed that the DDM-2000 FiberReach shelf is powered and running with loops at the low-speed cross-connections and that the high-speed terminations are either looped on themselves or connected in an end-to-end looped configuration. It is also assumed that protection circuit packs are installed and that no alarms or other diagnostic indications are activated.

   Unseat the service **DS1/DS1PM**, **T1EXT**, or **HDSL** circuit pack in LOW SPEED slot **LS-**[**A-1**, **B-1**, **C-1**, or **D-1**].

6. Wait 30 seconds.

7. Is the minor (**MN**) alarm activated?

   If **YES**, continue with **Step 8**.
   If **NO**, proceed to **Step 13**.

8. Leave the service **DS1/DS1PM**, **T1EXT**, or **HDSL** circuit pack unseated and unseat the associated protection **DS1/DS1PM**, **T1EXT**, or **HDSL** circuit pack in LOW SPEED slot **LS-**[**A-2**, **B-2**, **C-2**, or **D-2**] (1X1 protection) or LOW SPEED slot **LS-D-2** (1X7 protection).

9. Wait 30 seconds.

10. **NOTE:**
    In some offices the critical and major alarms may be wired together if a separate critical alarm is not available. This test will also activate the critical (**CR**) alarm LED on the User Panel.

    Is the critical (**CR**) or major (**MJ**) office alarm activated?

    If **YES**, continue with **Step 11**.
    If **NO**, proceed to **Step 13**.

11. Reseat both circuit packs. Take care to avoid damaging the LEDs protruding through the openings in the faceplates.

12. **STOP. YOU HAVE COMPLETED THIS PROCEDURE**.

13. Reseat both circuit packs. Take care to avoid damaging the LEDs protruding through the openings in the faceplates.

14. The DDM-2000 FiberReach shelf has failed the alarm test. The most likely source of the problem is the alarm wiring. Check that the alarms are connected correctly. If the wiring is correct and the failure persists, refer to **Trouble Clearing: TAP-108** to clear the failure.

15. **STOP. YOU HAVE COMPLETED THIS PROCEDURE**.

Perform OC-3c (STS-3c) Transmission Test

1. **NOTE:**
   Ensure that the OC-3c feature has been enabled .

   NOTE:
   This procedure may be used to perform OC-3c transmission tests in the mux (toward the fiber) direction. When this procedure is being used to perform end-to-end OC-3c tests. It is assumed that the complete end-to-end system has already been tested and that only the OC-3c signal is being tested at this time. Transmission tests in the mux direction may be local or end-to-end tests. (see Figure 1).

   NOTE:
   This test is performed with a SONET test set.

   NOTE:
   When this procedure is used to do end-to-end tests, one DDM-2000 shelf will be referred to as the near end and the other shelf as the far end. These designations are arbitrary; either shelf can be the near-end ot the far-end shelf.

   See Figure 1. If local tests are being preformed, the fiber loopback at the near-end **22D-U/22G-U/22G2-U/22G3-U/22G4-U OLIU** must be in place. If end-to-end tests are being performed, at the far-end LGX cross-connection associated with the DDM-2000 FiberReach being tested, connect a patch cord from the **OUT** jack to the **IN** jack for the OC-3c signal to be tested.

2. At the cross-connection associated with the near-end DDM-2000 FiberReach, connect the SONET test set to the IN and OUT jacks associated with the circuit under test.

3. Use the SONET test set to test for error-free transmission.

4. Was the test successful (error free)?

   If **YES**, continue with **Step 5**.
   If **NO**, proceed to **Step 14**.

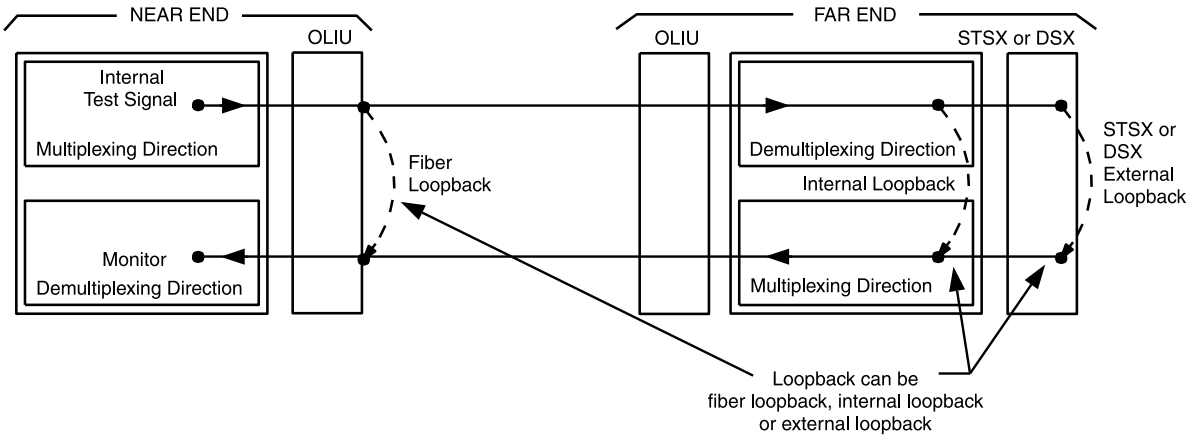

Figure 1. Transmission Test of OC-3c Signal in MUX Direction

5. Is this first service being placed on the group and is protection circuit pack installed?

   If **YES** , continue with **Step 6**.
   If **NO** , proceed to **Step 10**.

6. Unseat the service **22D-U/22G-U/22G2-U/22G3-U/22G4-U OLIU** circuit pack associated with the circuit under test.

7. Repeat the OC-3c transmission test with the SONET test set.

8. Was the test successful (error Free)?

   If **YES**, continue with **Step 9**.
   If **NO**, proceed to **Step 14**.

9. Reseat the **22D-U/22G-U/22G2-U/22G3-U/22G4-U OLIU** circuit pack associated with the circuit pack under test.

10. The **22D-U/22G-U/22G2-U/22G3-U/22G4-U OLIU** circuit pack under test has passed the OC-3c transmission test. Remove the looping patch cords from the cross-connections.

11. At the near-end (and the far-end) DDM-2000 FiberReach, momentarily depress the **UPD/INIT** pushbutton on the **SYSCTL** to update the **SYSCTL**.

12. Repeat this procedure fron Step 1 for any additional OC-3c circuits to be tested.

13. **STOP. YOU HAVE COMPLETED THIS PROCEDURE**.

14. Has the **22D-U/22G-U/22G2-U/22G3-U/22G4-U OLIU** circuit pack that failed been replaced?

    If **YES**, proceed to **Step 17**.
    If **NO**, continue with **Step 15**.

15. Replace the **22D-U/22G-U/22G2-U/22G3-U/22G4-U OLIU** circuit pack that failed the test.

    Reference: **DLP-523**

16. Repeat this procedure for the **22D-U/22G-U/22G2-U/22G3-U/22G4-U OLIU** circuit pack that failed.

17. Trouble may be in the LGX cross-connections or the shelf backlplane. If othe alarms or trouble indications are present, refer to **Trouble Clearing: IXL-001** to isolate the trouble. If no alarms or indications are present and a CIT is available, usr the **RETRIEVE** commands (for example, **`rtrv-alm`**, **`rtrv-hsty`**, etc.) to check for other trouble indications.

18. **STOP. YOU HAVE COMPLETED THIS PROCEDURE**.

Make VT1.5 (DS1) or STS1 (DS3) Cross-Connections Using CIT Single OC-3 or OC-12 Ring Configuration

1. **NOTE:**
   If you are not familiar with doing cross-connections using the CIT commands, it is **strongly** suggested that you read *Cross-Connection Provisioning* in the "Administration and Provisioning" section of this manual. Also, read the description of the following commands in the "Commands and Reports" section of this manual: **`ent-crs-sts1`**, **`ent-crs-vt1`**, **`rtrv-crs-sts1`**, **`rtrv-crs-1`**, **`dlt-crs-sts1`**, and **`dlt-crs-vt1`**.

   NOTE:
   You may have to log in to more than one node to get a complete map of the network using the **`rtrv-map-network`** and **`rtrv-map-neighbor`** command. If a drawing of the network is not provided with the work order, it is recommended that you draw a simple schematic of the network before making cross-connections. List the TID of each node and how they are connected to each other. Figure 1 shows an example of a simple schematic.

   Log into any node in each ring in the network and use the **`rtrv-map-network`** and **`rtrv-map-neighbor`** command to retrieve a map of the network which lists all the systems and how they are connected to each other. Sample output reports are shown in Figures 2, 3, and 4.

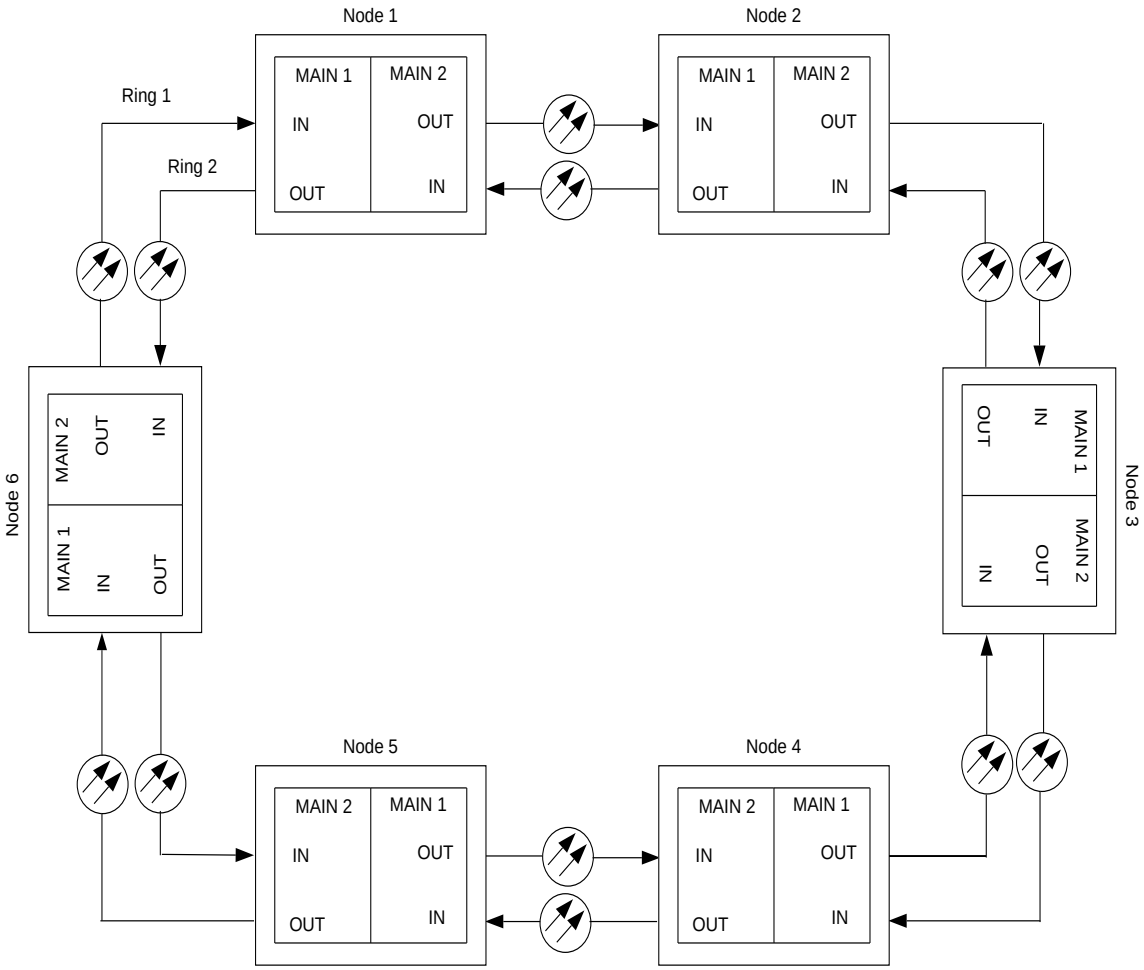

Figure 1. Sample Network Schematic

```
/* Neighbor Map for Site6NE1
====================================================================
TID                           Product Type            Level 2 IS
NSAP
====================================================================
Site6NE1                      FiberReach
 39 840F 80 000000 0000 0000 0000 08006alad06e 00
R5
 39 840F 80 000000 0000 0000 0000 00000e3a0273 00
R6
 39 840F 80 000000 0000 0000 0000 00000e3a0273 00
R7
 39 840F 80 000000 0000 0000 0000 00000e3a0273 00
Site3NE1                                                     Y
 39 840F 80 000000 0000 0000 0000 00000e3a0372 00
Site7NE1
 39 840F 80 000000 0000 0000 0000 08006alad06f 00

*/
```

Figure 2. Sample Report From `rtrv-map-network` Command

```
/* Network Map for Site6NE1
====================================================================
TID                  Connected Thru    Product Type    Level 2 IS
NSAP
====================================================================
Site6NE1                                FiberReach
 39 840F 80 000000 0000 0000 0000 08006alad06e 00
Site7NE1               main-1
 39 840F 80 000000 0000 0000 0000 08006a1ad06f 00
Site5NE1               main-2
 39 840F 80 000000 0000 0000 0000 00000e3a0372 00
*/
```

Figure 3. Sample Report From `rtrv-map-neighbor` Command (Release 3.0)

```
/* Network Map for Site6NE1
=====================================================================
TID                  Connected Thru    Product Type    Level 2 IS  DCC
NSAP
=====================================================================
Site6NE1                               FiberReach
 39 840F 80 000000 0000 0000 0000 08006alad06e 00
Site7NE1               main-1
 39 840F 80 000000 0000 0000 0000 08006a1ad06f 00
Site5NE1               main-2                          ?           N
 39 840F 80 000000 0000 0000 0000 00000e3a0372 00
*/
```

Figure 4. Sample Report From `rtrv-map-neighbor` Command (Release 3.1 and Later)

2. Verify system configuration is same as specified on work order or circuit order.

3. From work order or circuit order, determine the terminating (drop) nodes for the service being established.

4. **NOTE:**
   In single ring configurations, cross-connections consist of pass-through cross-connections in addition to the terminating cross-connections. For example in Figure 1, if the terminating nodes are at Node 1 and Node 5, then pass-through cross-connections will have to be made at Nodes 2, 3, 4 and 6.

   NOTE:
   In ring configurations, you should use the following rules in establishing cross-connections in each ring:

   1. All drop connections (including DRI, if present) from the same STS-1 timeslot must be provisioned the same, either all VT1.5 or STS-1.
   2. If all 28 VT1.5s (DS1s) in an STS-1 are being passed through at a node in a VT1.5 path-switched ring, then the cross-connection may be provisioned as either a pass-through STS-1 or VT1.5.
   3. On STS-1 path-switched rings, all nodes in the ring must be provisioned as STS-1 cross-connections.

   From work order, circuit order, and the sketch made in **Step 1**, determine the pass-through nodes for the service being established.

5. Use the **`rtrv-eqpt:`** command at each node to verify that each shelf is properly equipped for the service being established. For example, is the group or slot being used for service at the terminating ends equipped with the proper **MXRVO** and/or **DS1/DS1PM** circuit packs if DS1 service is being established?

6. **NOTE:**
   Cross-connections supporting DS3 services are STS-1 cross-connections. Cross-connections supporting DS1 services are VT1.5 cross-connections. If STS-1 cross-connections are made at a shelf, there is a fixed mapping of all 28 VT1.5 cross-connections to a specific shelf group (see **`ent-crs-sts1`** command).

   NOTE:
   The following commands may be used to delete, enter, and retrieve cross-connections: **`dlt-crs-sts1`**, **`ent-crs-sts1`**, **`dlt-crs-vt1`**, **`ent-crs-vt1`**, **`rtrv-crs-vt1`**, and **`rtrv-crs-sts1`**. See the "Commands and Reports" section of this manual for a description of commands.

   From work order or circuit order, determine the cross-connections to be made at each node associated with the service being established. See Figures 5 through 9 for examples.

7. Starting at one of the terminating nodes for the DS1/DS3 circuit being established, use the **`rtrv-crs-( ):`** command at each node in the ring to verify that the cross-connections specified on the work order or circuit order may be made. For example, if the DS1 #3 low speed port in the **DS1** circuit pack in slot #2 of Low Speed Group A (a-2-3) is to be connected to timeslot m-1-2-3 and the **`rtrv-crs-vt1`** command shows that the cross-connection is already established, you should determine from office records if this port is already in-service before continuing with this procedure.

   If cross-connections are already assigned or improperly assigned, refer trouble to the organization responsible for facility design. Improperly assigned cross-connections may have to be deleted using the **`dlt-crs-( )`** commands.

8. **NOTE:**
   The channel state provisioning feature provides IS, AUTO, and NMON states for VT and STS channels similar to the channel states for DS1 and DS3 ports. At installation, or when a cross-connection is made to a point of termination, the channel is in the AUTO state and alarming is disabled.The channel must receive a good signal from either ring to cause the channel to transition to in-service (IS).

   At all nonterminating nodes in the network, use the **`ent-crs-vt1:`** or **`ent-crs-sts1:`** command to provision pass-through connections. [For example, to make the DS1 pass-through cross-connection for channel m-1-2-3, use the **`ent-crs-vt1:m-1-2-3,m-1-2-3`** command. To make pass-through cross-connections for STS-1 #1, use the **`ent-crs-sts1:m-1,m-1`** command.]

9. At the terminating (drop) nodes of the circuit being established, use the **`ent-crs-vt1:`** or **`ent-crs-sts1:`** command to make the terminating cross-connections (for example, **`ent-crs-vt1:m-1-2-3,a-2-3`** or **`ent-crs-sts1:m-1,a`**).

10. Use the **`rtrv-crs-vt1:`** or **`rtrv-crs-sts1:`** command to verify that the proper connection has been made. If an improper cross-connection is made, use the **`dlt-crs-vt1:`** or **`dlt-crs-sts1:`** command to delete the improper cross-connection and reenter the cross-connection.

11. After all cross-connections are made, use the **`rtrv-alm:`** command to verify no alarms are present.

12. If DS3 cross-connections have been established and the terminating nodes are equipped with **BBG4B DS3** circuit packs, use **`set-trace-sts1`** command to check integrity of cross-connect path.

    Reference: **DLP-544**

13. If `ne-acty, inc. VT AIS`, `inc. STS1 AIS`, `inc. VT unequipped`, or `inc. STS1 unequipped`, alarms are present, look for missing or improperly made cross-connections. Use **TAP-118** to locate missing cross-connections, if required.

14. **STOP. YOU HAVE COMPLETED THIS PROCEDURE.**

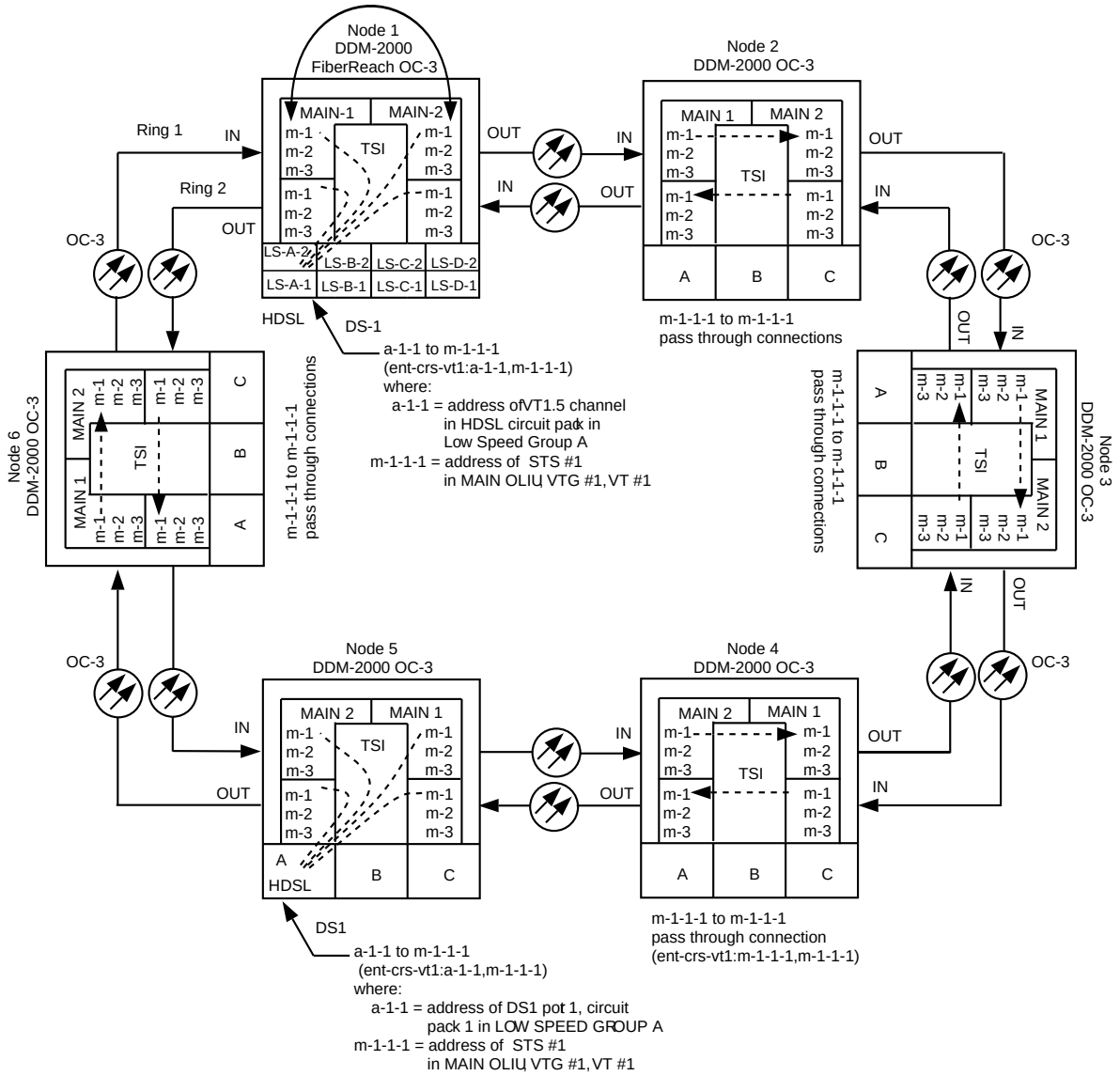

Figure 5. Path Protected OC-3 Ring Network (DS1 to DS1) with VT1.5 Cross-Connections

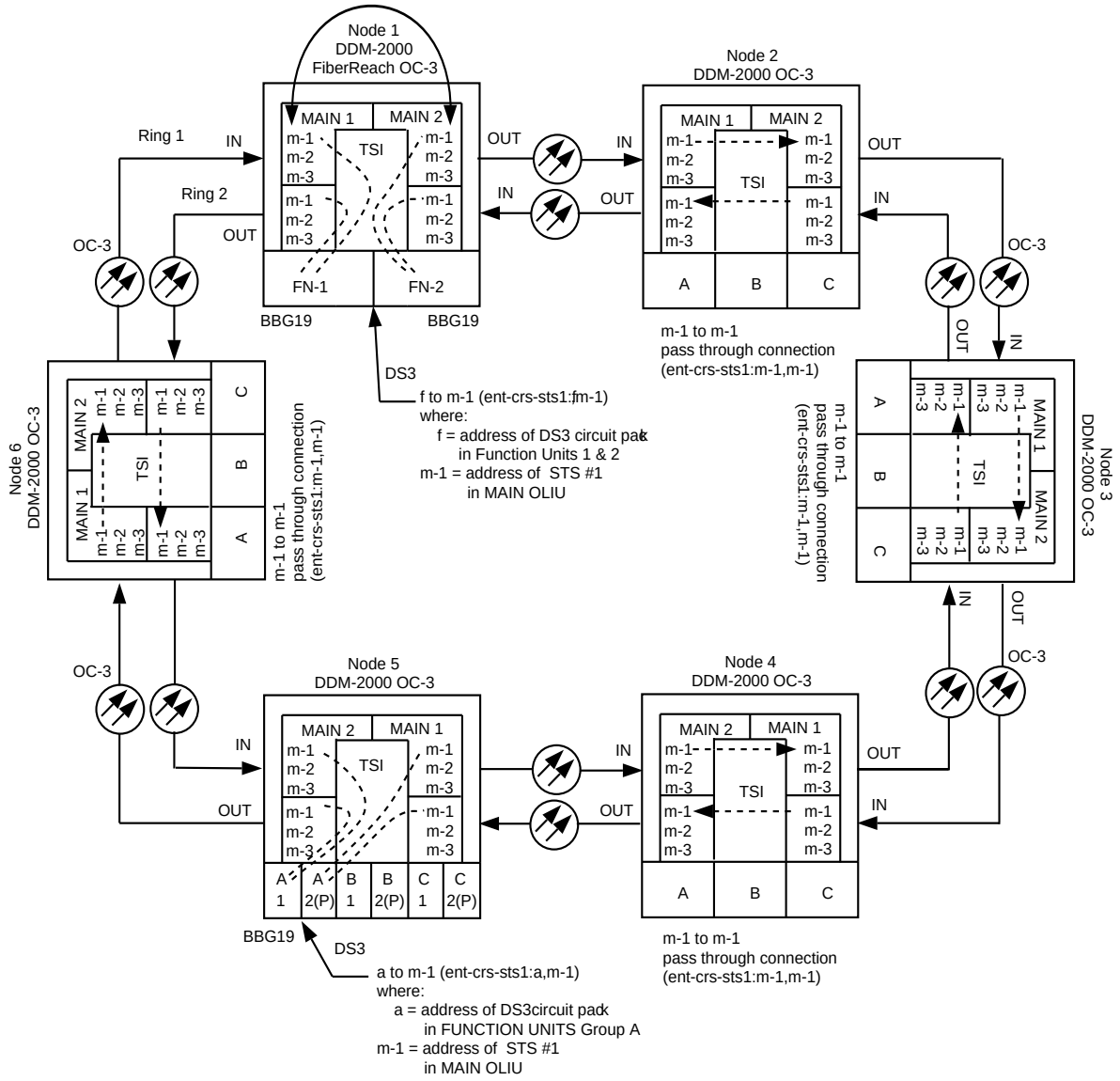

Figure 6. Path Protected OC-3 Ring Network (DS3 to DS3) with STS1 Cross-Connections

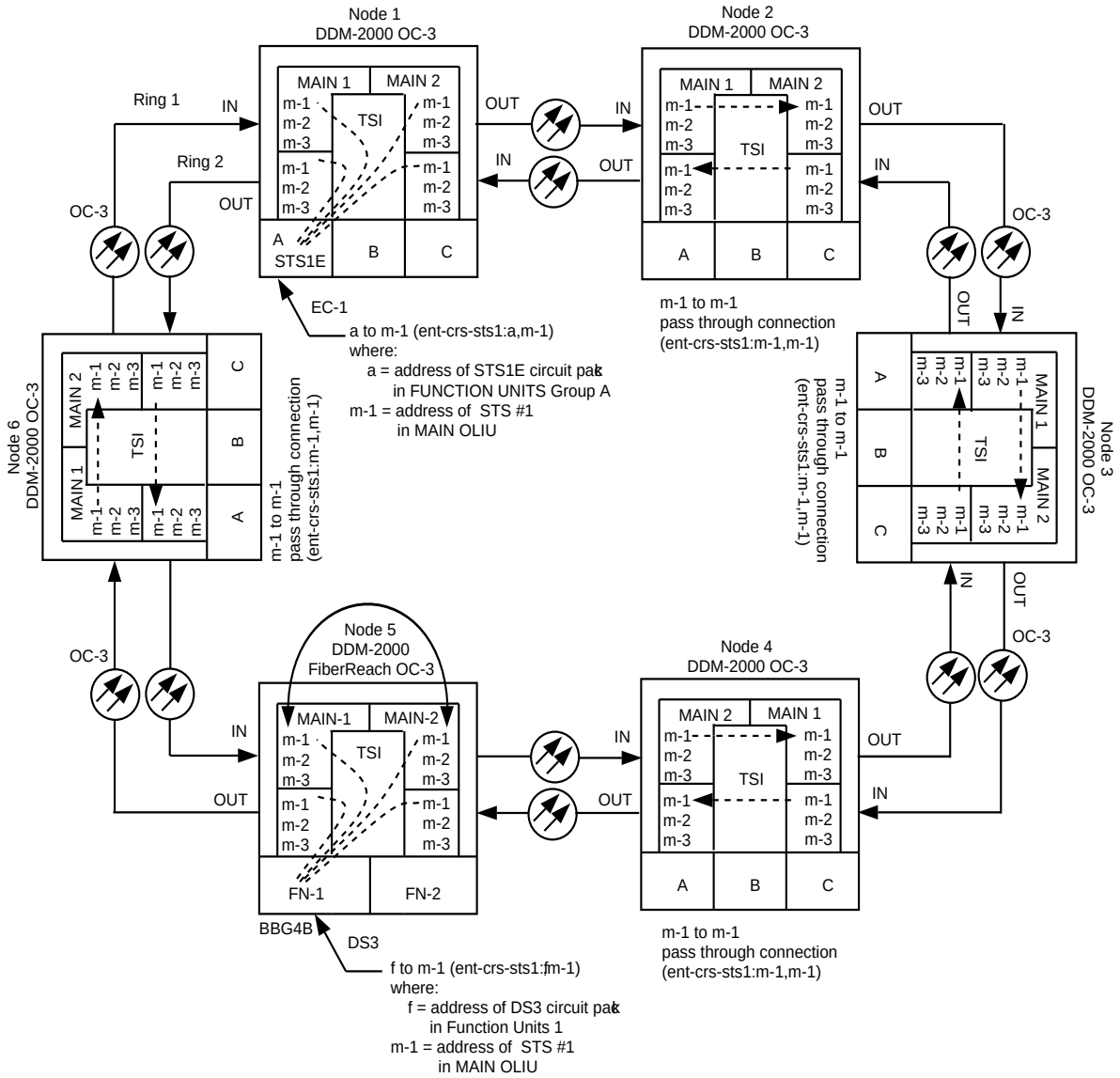

Figure 7. Path Protected OC-3 Ring Network (DS3 to EC-1) with STS1 Cross-Connections

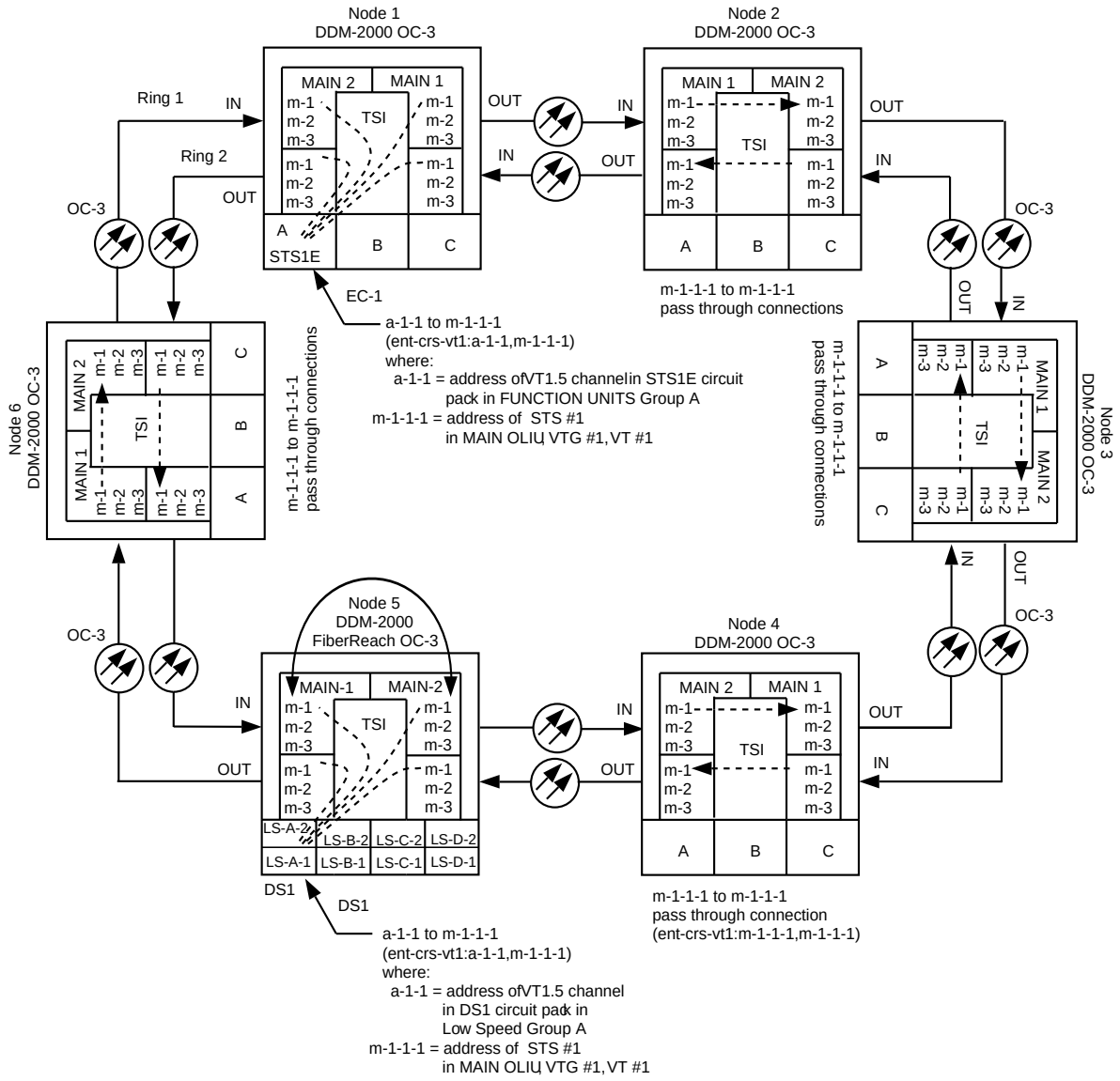

Figure 8. Path Protected OC-3 Ring Network (one DS1 to EC-1) with VT1.5 Cross-Connections

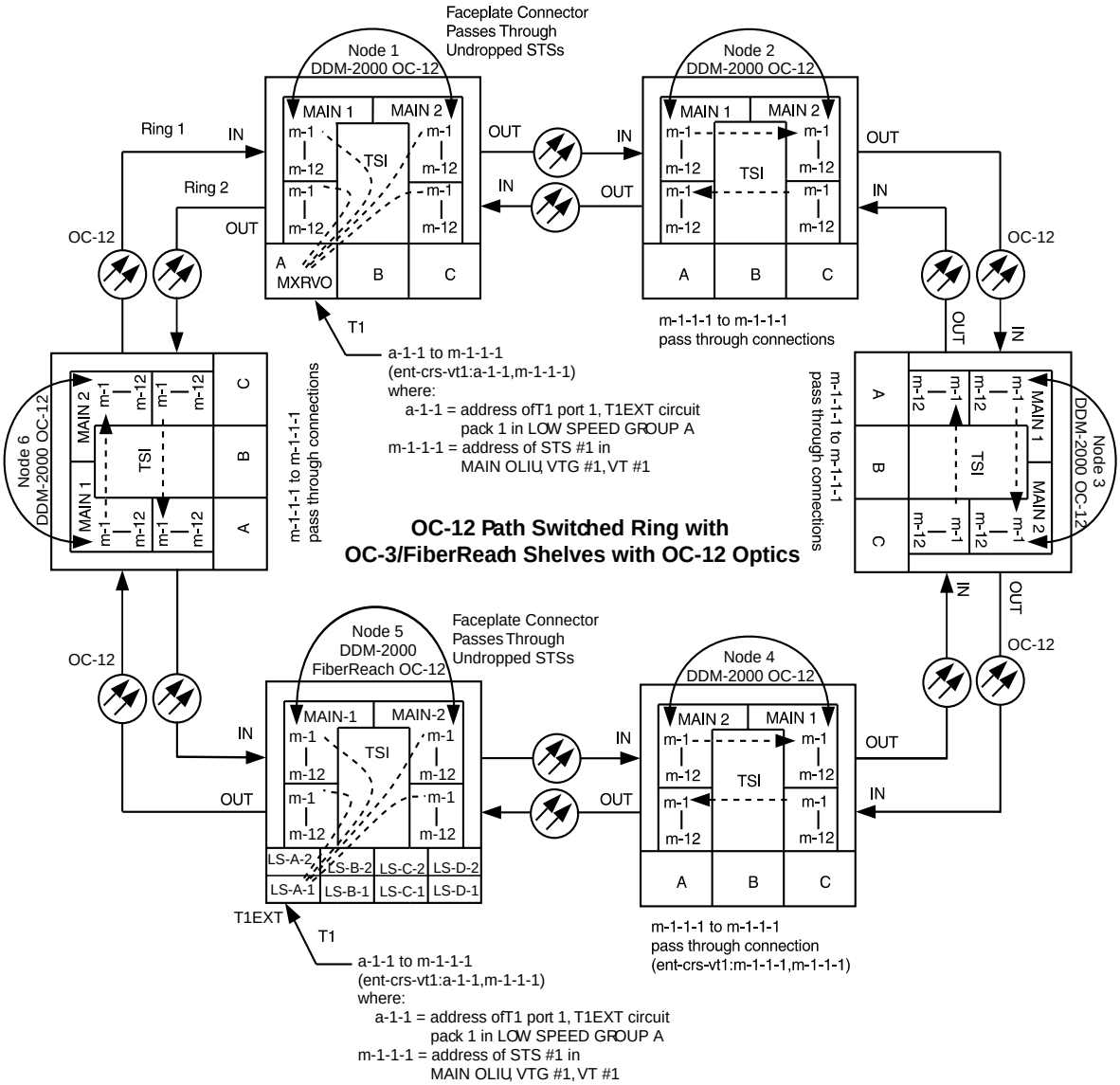

Figure 9. Path Protected OC-12 Ring Network (T1 to T1) with VT1.5 Cross-Connections

Test Protection Switching Function

1. Is a CIT available?

   If **YES**, continue with **Step 2**.
   If **NO**, proceed to **Step 10**.

2. To test for a switch to protection using a CIT, connect the CIT to the **CIT** connector on the User Panel. Enter the command: **`rtrv-state-eqpt`**. The terminal will display the current protection status.

3. Use switch command: **`switch-ls:`***`address`***`:pri=manual`**, to perform a switch.

4. Enter the command: **`rtrv-state-eqpt`** to verify the switch was done.

5. Use the command: **`switch-ls:`***`address`***`:pri=reset`** or **`pri=manual`** for to reset switch.

6. Enter the command: **`rtrv-state-path`***`:address`*, to verify the protection switch status of the VTs on the optical interface.

7. Use the command: **`switch-path-vt1:`***`:address:`***`pri=manual`** to switch any one of the paths.

8. Repeat **Step 6** to verify that the path switch occurred.

9. **STOP. YOU HAVE COMPLETED THIS PROCEDURE**.

10. **NOTE:**
    The alarm delay is provisionable from 0 to 30 seconds. This procedure assumes the alarm delay is set for the default of 2 seconds.

    To test a low-speed switch to protection, unplug one of the service **DS1**, **DS1PM**, **T1EXT**, or **HDSL** circuit packs, if installed.

    Response: **NE ACTY** LED on User Panel lights. **MN** LED lights after 2 seconds.

11. Reseat the circuit pack that was removed.

    Response: All LEDs go OFF after 15 seconds.

12. Repeat Step 10 for each equipped low-speed muldem.

13. **WARNING:**
    Unterminated optical connectors may emit invisible laser radiation. Avoid direct exposure to the beam. Do not view beam with optical instruments. Use of controls or adjustments or performance of procedures other than those specified herein may result in hazardous radiation exposure.

    Remove the upper **IN** fiber from either of the **OLIUs**.

    Response: The **FAULT** LED on the disconnected **OLIU** begins flashing. **MN** LED lights after 2 seconds. **ACTIVE** LED remains lighted on **OLIU** with fiber disconnected.

14. Reconnect the fiber. After a few seconds, the **FAULT** LED goes out (stops flashing). The **MN** LED also goes out.

15. Remove and immediately reconnect the upper **IN** fiber from the other **OLIU**.

    Response: The **FAULT** LED on the disconnected **OLIU** begins flashing. **MN** LED lights after 2 seconds. **ACTIVE** LED remains lit on **OLIU** with fiber disconnected.

16. Reconnect the fiber. After a few seconds, the **FAULT** LED goes out (stops flashing). The **MN** LED also goes out.

17. **STOP. YOU HAVE COMPLETED THIS PROCEDURE**.

Condition DS1/DS1PM Circuit Pack/Port for New DS1 Service

1. **NOTE:**
   The commands **`rtrv-alm`** and **`rtrv-state-eqpt`** may be used to check for alarms, locks, loops, and switches.

   NOTE:
   If line code (lc) parameters have been previously set using the **`set-t1`** command, the circuit pack line code switch settings will have no effect. There will be no indication of improper switch settings until you try to establish service. It is recommended that a policy be established to set line coding either using the switches or using CIT commands. Use the **`rtrv-t1`** command to check line code settings.

   Use **`rtrv-alm`** command to verify that no alarms, locks, loops, or switches are present.

2. Is a new **DS1**/**DS1PM** circuit pack being installed?

   If **YES**, proceed to **Step 5**.
   If **NO**, continue with **Step 3**.

3. **CAUTION:**
   To minimize hits on in-service ports on the **DS1/DS1PM** *circuit pack having a DS1 port added, it is recommended to either use a CIT to manually switch the DS1 to protection if the* **DS1/DS1PM** *circuit pack must be removed, or use the CIT to set DS1 port options without removing the circuit pack.*

   CAUTION:
   If the protection **DS1/DS1PM** *circuit pack is not available for a protection switch, removing a service* **DS1/DS1PM** *circuit pack will interrupt service on all DS1 ports on that circuit pack. If a CIT is available, use the* **`rtrv-state`** *command to check the status of the protection switch.*

CAUTION:
When a **DS1/DS1PM** *is switched to protection, removal of any other* **DS1/DS1PM** *circuit pack or* **177A** *Retainer Card in the same group will result in a loss of service to the protected* **DS1/DS1PM** *and the removed* **DS1/DS1PM** *circuit pack.*

Use **`set-t1`** command to set **DS1**/**DS1PM** port options.

4. **STOP. YOU HAVE COMPLETED THIS PROCEDURE.**

5. Set option switches and install new **DS1**/**DS1PM** circuit pack.

   Reference: **DLP-508**

6. **STOP. YOU HAVE COMPLETED THIS PROCEDURE.**

Connect CIT and Establish Session

1. **CAUTION:**
   You must wear an ESD wrist strap plugged into the grounding jack on the right side of the assembly whenever working with the DDM-2000.

   Connect CIT to the RS-232C **CIT** connector on the DDM-2000 User Panel or rear **CIT** connector.

2. Turn on CIT and set terminal parameters as follows (consult your terminal's manual for setup procedures):
   - Full duplex
   - 8 data bits
   - 1 start bit
   - 1 stop bit
   - No flow control
   - Baud rate setting is automatically set by DDM-2000 when connection is made.

3. **NOTE:**
   To set baud rate automatically, enter two carriage returns (**<cr>**), two lower case "a"s (**aa**), or two upper case "A"s (**AA**). All other characters are ignored.

   Enter two carriage returns.

   Response: CIT prompts with:
   ```
   /* Enter a shelf number from 1 to 8 */
   shelf [default=1] =
   ```

4. **NOTE:**
   Entering just a carriage RETURN at the shelf prompt will connect you to the default shelf physically connected to the CIT.

   Enter the shelf number and/or carriage RETURN for the shelf being accessed.

   Response: CIT prompts with `login <`

5. **NOTE:**
Security is available to protect against unauthorized access to the system. System security requires the defaults for the privileged user logins/password to be changed and CIT and/or DCC port security to be enabled. If security is enabled on a port, users must enter a valid login and password to access the system through that port.

NOTE:
The system always has three privileged user logins to minimize the chance that both users will forget their passwords at the same time. You must be logged into the system as a *privileged user* to set security; add, change, or delete logins; and to execute some commands. The default *privileged user* logins (Release 2.1 and later) are LUC01 (upper case LUC-zero-one), LUC02 (upper case LUC-zero-two), and LUC03 (upper case LUC-zero-three). The default *privileged user* password is DDM-2000. For Release 2.0 and earlier, the defaults for the privileged user logins are ATT01 (upper case ATT-zero-one), ATT02 (upper case ATT-zero-two), and ATT03 (upper case ATT-zero-three). The CIT login banner for Release 2.0 and earlier reads: `AT&T`, `DDM-2000 FiberReach`, `Release a.b.c.`

Were you sent here from **DLP-500** to connect CIT?

If **YES**, **STOP. YOU HAVE COMPLETED THIS PROCEDURE.**
If **NO**, continue with **Step 6**.

6. If security has been enabled, enter your login, and then enter your password when prompted.

   If security has not been enabled, enter a carriage RETURN.

   Response: CIT prints the following message followed by an Alarm and Status Report:

```
/***********************************
*                                  *
*                                  *
*        Lucent Technologies       *
*        DDM-2000 FiberReach       *
*                                  *
*           Release a.b.c          *
*                                  *
*                                  *
***********************************/

                    .

                    .

                    .

   TID date time
M  rtrv-alm: all COMPLD
   /* Active Alarms and Status Report
```

7. **NOTE:**
   The system prompt may be something other than `<` if there is an alarm condition (for example, if there is an MJ alarm condition on the system, the prompt will be `MJ <`).

NOTE:
After the prompt (<), the system will respond to commands entered. The command **`set-link:pg=( )`** may be used to set the vertical size of the displayed page on the CIT. Page (**`pg`**) length may be set from 3 to 150 lines with a default length of 24 lines. The page length is set to default each time a new CIT session is started.

See the "Commands and Reports" section of this manual for a description of the command formats.

8. **STOP. YOU HAVE COMPLETED THIS PROCEDURE.**

Establish Remote Login

1. Connect CIT and establish session with near-end DDM-2000 FiberReach shelf.

   Reference: **DLP-521**

2. **NOTE:**
   The command **`toggle`** (CTRL T) may be used to toggle back and forth between a remote DDM-2000 terminal and the near-end terminal. If no remote session is in progress, the toggle command will be rejected.

   NOTE:
   A remote login within a remote login or a remote login entered to the near end while a remote session is suspended by the toggle command is not allowed. (A remote session is suspended when a remote session is under way and **`toggle`** (CTRL T) is entered to toggle control to the near end.) A remote login will also be denied if one is already in progress at the remote site.

   NOTE:
   If security has been enabled on the DCC port being accessed, a login and password is required to do the remote login.

   NOTE:
   Far-end communications (fecom) must be enabled in the far-end shelf in order to remote login to that shelf. The command **`rtrv-fecom`** can be used locally at the far-end shelf to determine if *fecom* is enabled or disabled. The command **`set-fecom`** can be used at the far-end shelf to enable *fecom*. If security is enabled, the **`set-fecom`** command can be executed by privileged users only.

   NOTE:
   A remote login session may be terminated in some cases due to events in distant shelves and may not be noticeable until you begin typing in the *rlgn* session. Events such as disabling fecom, failure of the DCC, **`init-sys`** or **`reset`**, removing **OLIU**s, etc., may abruptly terminate a remote login session. This is normal because all the network elements must relearn the network after one of these events.

   Enter command **`rlgn:tid`**
   Where tid = the target identifier (shelf or site/shelf name) of the remote terminal.

   Response: **CIT** prompts with: `login <`

3. If security has been enabled, enter your login and password when you are prompted.

   If security has not been enabled, enter a carriage RETURN.

   Response: System responds with:

```
/***********************************
*                                  *
*                                  *
*        Lucent Technologies       *
*        DDM-2000 FiberReach       *
*                                  *
*           Release a.b.c          *
*                                  *
*                                  *
***********************************/

                    .

                    .

                    .

   TID date time
M  rtrv-alm: all COMPLD
   /* Active Alarms and Status Report
```

4. **NOTE:**
   After the prompt, the remote system will respond normally to any commands entered just as if you were physically connected to the remote terminal.

   See the "Commands and Reports" section of this manual for a description of the commands formats.

5. **NOTE:**
   A logout entered to the remote terminal will end the remote session and return control to the near-end CIT. A logout entered to the near-end terminal will terminate the local and remote sessions.

   Use the command **`logout`** to log out of the remote terminal session and return control to the near-end terminal.

6. **STOP. YOU HAVE COMPLETED THIS PROCEDURE.**

Replace Circuit Pack

1. **CAUTION:**
Circuit packs must not be installed or replaced if the **SYSCTL** *is not installed and operating normally. If the* **SYSCTL** *is not installed and operating normally, unpredictable provisioning of the replaced/installed circuit pack can result.*

CAUTION:
Ensure that protection switching is available (protection circuit pack and/or line good and no locks, inhibits, or forced switches in effect). When available, use a CIT and a protection **`switch-path-vt1:`** *command to do a protection switch.*

CAUTION:
When removing circuit packs, always remove the one without the lighted **ACTIVE** *LED first. Make certain that the fibers are disconnected before removing any circuit packs.*

NOTE:
When a replacement circuit pack (except the **SYSCTL**) is configured the same as the original circuit pack, it may be inserted with no further action. When a replacement circuit pack is different (different code or different switch options) from the original, the **SYSCTL UPD/INIT** button must be depressed momentarily to update the inventory.

Find the circuit pack in Table A and go to the indicated step.

Table A – Circuit Pack Replacement

Circuit Pack	Step
BBG8/BBG8B SYSCTL	Step 2
22D-U/22F-U/22F2-U OLIU	Step 4
22G-U/22G2-U/22G3-U/22G4-U OLIU	Step 4
26G-U/26G2-U OLIU	Step 4
28G-U/28G2-U OLIU	Step 4
29G-U/29H-U OLIU	Step 4
BBF1/BBF1B DS1	Step 20
BBF3/BBF3B DS1PM	Step 20
BBF6 T1EXT	Step 25
BBF8 HDSL	Step 28
BBG4/BBG4B/BBG19 DS3	Step 32

BBG8/BBG8B SYSCTL

2. Refer to **DLP-501** to replace the **SYSCTL**.

3. **STOP. YOU HAVE COMPLETED THIS PROCEDURE.**

OLIU

4. **WARNING:**
Unterminated optical connectors may emit invisible laser radiation. Avoid direct exposure to the beam. Do not view beam with optical instruments. Use of controls, adjustments, or performance of procedures other than those specified herein may result in hazardous radiation exposure.

CAUTION:
*This **procedure is used** to replace a* **26-Type OLIU** *with a* **26-Type OLIU**. *This **procedure is used** to replace a* **28-Type OLIU** *with a* **28-Type OLIU** *or a* **29-Type OLIU** *with a* **29-Type OLIU**. *This **procedure is not used** to perform an Out Of Service Upgrade from a* **26-Type OLIU** *to a* **28-Type** or **29-Type OLIU [DLP-543]**.

CAUTION:
Ensure that protection switching is available (protection line good and no locks, inhibits, or forced switches in effect). When available, use a CIT and the ***switch-path-vt1:*** *or* ***switch-path-sts1:*** *command to do a protection switch. The line protection switching request is unidirectional. It may be necessary to perform a* ***switch-path-vt1:*** *or* ***switch-path-sts1:*** *command at the near end and far end to switch both transmit and receive to the same line. If there are any locked cross-connections, switching of traffic cannot occur.*

CAUTION:
When removing circuit packs, always remove the one without the lighted **ACTIVE** *LED first. Remove optical fiber cables before removing circuit pack and take care to avoid damage to fibers during removal or installation of the circuit pack.*

CAUTION:
Before installing **OLIU**s, *ensure all optical fiber connectors and couplings have been properly cleaned* **[DLP-527]**. *Signal performance may be degraded if the connectors and couplings are not cleaned properly.*

NOTE:
Removal of the optical fiber when the FiberReach shelf has bidirectional cross connections (i.e. STS-3c) will generate a **CR** LED (`inc. OC3/OC12 LOS`) alarm.

NOTE:
It is assumed that the loss of the optical facility is known from office records or that a measurement has been made **[DLP-514]**.

Use **`rtrv-state-path:`** command to ensure service has been switched to the other line; then remove optical cables from **OLIU** to be replaced.

5. Remove any universal **LBO** from **OLIU [DLP-503**, **Step 2]**.

6. Is a **28-Type** or **29-Type OLIU** being replaced?

   If **YES**, proceed to **Step 12**.
   If **NO**, continue with **Step 7**.

7. Remove old **OLIU**.

8. Install **same type** replacement **OLIU**.

   Response: **FAULT** LED on **OLIU** flashes.

9. Install universal **LBO** from **OLIU [DLP-503, Step 5]**.

10. **NOTE:**
    The **FAULT** LED on the **OLIU** may flash from 15 seconds to 3 minutes and 25 seconds depending on the provisioned signal degrade threshold.

    Connect optical cables to replacement **OLIU**.

    Response: **FAULT** LED on the **OLIU** goes off.

11. **STOP. YOU HAVE COMPLETED THIS PROCEDURE**.

12. Disconnect the faceplate connector (ribbon cable) from the **28-Type** or **29-Type OLIU** being replaced.

    Response: **28-Type OLIU** [**MN** LED (`OLIU connector failed`) alarm will light.]

    29-Type OLIU [**MN** LED (`OLIU connector failed` and `OLIU CP failed`) alarm will light.]

13. Remove old **OLIU**.

14. Install **same type** replacement **OLIU**.

    Response: **28-Type OLIU FAULT** LED flashes.

    29-Type OLIU FAULT LED lights (solid).

15. Install universal **LBO** from **OLIU [DLP-503, Step 5]**.

16. **NOTE:**
    The **FAULT** LED on the **OLIU** may flash from 15 seconds to 3 minutes and 25 seconds depending on the provisioned signal degrade threshold.

    Connect optical cables to replacement **OLIU**.

    Response: **28-Type OLIU FAULT** LED goes out.

    29-Type OLIU FAULT LED remains lit (solid).

17. Connect the faceplate connector (ribbon cable) to the **28-Type** or **29-Type OLIU** being replaced.

    Response: **28-Type OLIU** [**MN** LED (`OLIU connector failed`) alarm will clear.]

    29-Type OLIU FAULT LED goes out. [**MN** LED (`OLIU connector failed` and `OLIU CP failed`) alarm will clear.]

18. Verify that the connectors on the faceplate connector cable are properly seated and latched.

19. **STOP. YOU HAVE COMPLETED THIS PROCEDURE**.

BBF1/BBF1B DS1/BBF3/BBF3B DS1PM

20. Determine from office records the length of the DS1 cabling between the DDM-2000 and the DSX-1 cross-connect point.

21. **NOTE:**
Switch 1, sections 1 through 3 (**S1-1**, **S1-2**, **S1-3**), are set according to the length of DS1 cabling between the DDM-2000 and the DSX-1 cross-connection. Switch 1, sections 4 through 7 (**S1-4, S1-5, S1-6, S1-7**), are set for the type of line coding (B8ZS or AMI) required of the DS1 signal. Switch 1, section 8 (**S1-8**) on the **BBF1/BBF1B DS1** is unused and ignored by the system. On the **BBF3 DS1PM**, **S1-8** must be set to OFF.

NOTE:
To set switch to ON, depress rocker or slide switch toward side labeled **ON** in the figure. To set switch to OFF, depress rocker or slide switch toward side labeled **OFF** in the figure. Refer to Table B and Figure 1 and set LBO option switches.

Table B – DS1/DS1PM Cable LBO Settings (Note)

613C (608C) Cable Length (feet)	1249C Cable Length (feet)	Other Cable dB Loss at 772 kHz	Switch S1 Settings		
			S1-1	S1-2	S1-3
0 to 133	0 to 90	0 to 0.6	OFF	OFF	OFF
>133 to 267	>90 to 180	>0.6 to 1.2	OFF	OFF	ON
>267 to 400	>180 to 270	>1.2 to 1.8	OFF	ON	OFF
>400 to 533	>270 to 360	>1.8 to 2.4	OFF	ON	ON
>533 to 655	>360 to 450	>2.4 to 2.8	ON	OFF	OFF

Note: Invalid switch settings will cause the **FAULT** LED to light and a `DS1 CP failed` alarm.

22. **NOTE:**
If line code (lc) parameters are generally set using the **`set-t1`** command, the circuit pack switch settings will have no effect. The **`rtrv-t1`** command may be used to check line code settings.

Refer to Table C and Figure 1 and set the line code option switches, if required.

Table C – DS1/DS1PM Line Code Settings

Line Code Format	Switch S1 Settings				
	S1-4 (Port 1)	S1-5 (Port 2)	S1-6 (Port 3)	S1-7 (Port 4)	S1-8 (Note)
B8ZS	OFF	OFF	OFF	OFF	OFF
AMI	ON	ON	ON	ON	

Note: Switch 1, section 8 (**S1-8**) on the **BBF1/BBF1B DS1** is unused and ignored by the system. On the **BBF3 DS1PM**, **S1-8** must be set to OFF**.**

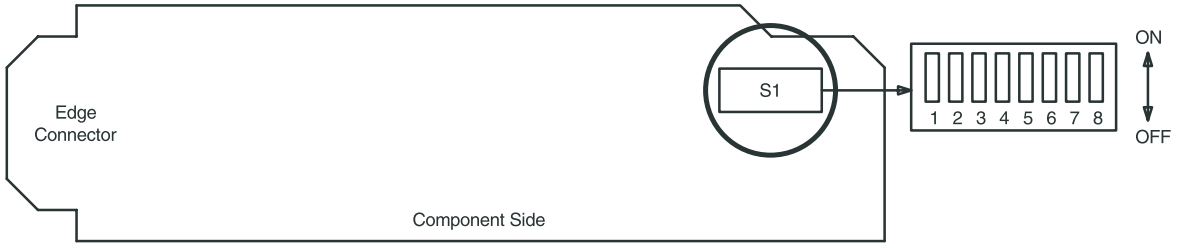

Figure 1. DS1/DS1PM Option Settings

23. **CAUTION:**
When a **DS1/DS1PM** *circuit pack is switched to protection, removal of any other* **DS1/DS1PM** *circuit pack in the same group will result in a loss of service to the protected* **DS1/DS1PM** *circuit pack and the removed* **DS1/DS1PM** *circuit pack.*

NOTE:
If a signal has previously been applied to the original **DS1/DS1PM** circuit pack, the **FAULT** lamp will flash when the new **DS1/DS1PM** circuit pack is installed until the signal tests good.

NOTE:
A **DS1PM** circuit pack must be replaced with the same type circuit pack to retain the proper feature applications. Also, if protection is required and **DS1PM** circuit packs are installed in the service slots, the protection circuit pack must be a **DS1PM** circuit pack.

Remove old **DS1/DS1PM** circuit pack and install replacement **DS1/DS1PM** circuit pack.

Response: **FAULT** LED on the **DS1/DS1PM** circuit pack may light (flash) for up to 40 seconds and then goes off.

24. **STOP. YOU HAVE COMPLETED THIS PROCEDURE.**

BBF6 T1EXT

25. **CAUTION:**
In addition to primary lightning protection, an external Lightning and Surge Secondary Protection Assembly (ED-8C783-30 or equivalent) is required for **T1EXT** *circuits used in outside plant applications.*

NOTE:
To set switch to ON, depress rocker or slide switch toward side labeled **ON** in the figure. To set switch to OFF, depress rocker or slide switch toward side labeled **OFF** in the figure.

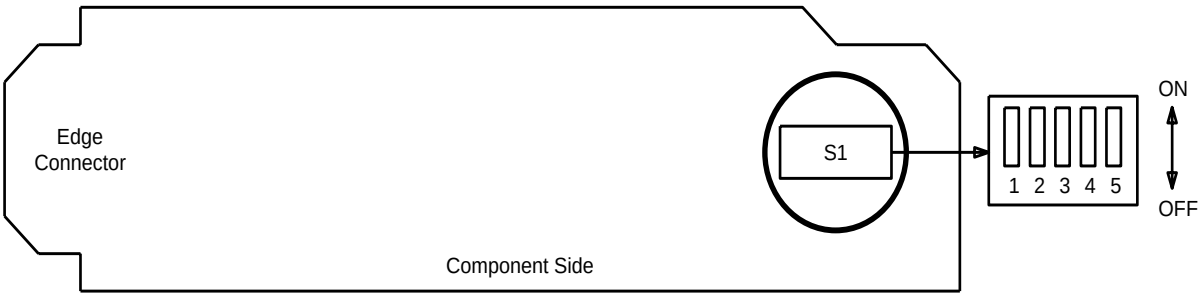

Figure 2. T1EXT Option Settings

NOTE:
It is recommended that a policy be established to set line coding either using the option switches OR using the **`set-t1`** command. If line code (lc) parameters are set using the **`set-t1`** command, the circuit pack switch settings will have no effect. The **`rtrv-t1`** command may be used to check line code settings.

Refer to Table D and Figure 2 and set the line code option switches, if required.

Table D – T1EXT Line Code Settings

Line Code Format	Switch S1 Settings				
	S1-1 (Port 1)	S1-2 (Port 2)	S1-3 (Unused)	S1-4 (Unused)	S1-5 (Unused)
B8ZS	OFF	OFF	OFF	OFF	OFF
AMI	ON	ON			

Note: Switch 1, section 3 (**S1-3**),section 4 (**S1-4**), and section 5 (**S1-5**) must be set to OFF.

26. **CAUTION:**
When a **T1EXT** *circuit pack is switched to protection, removal of any other* **T1EXT** *circuit pack or* **177A** *Retainer Card in the same 1X7 protection group will result in a loss of service to the protected* **T1EXT** *circuit pack and the removed* **T1EXT** *circuit pack.*

NOTE:
If a signal has previously been applied to the original **T1EXT** circuit pack, the **FAULT** lamp will flash when the new **T1EXT** circuit pack is installed until the signal tests good.

Remove old **T1EXT** circuit pack and install replacement **T1EXT** circuit pack.

Response: **FAULT** LED on the **T1EXT** circuit pack may light (flash) for up to 40 seconds and then goes off.

27. **STOP. YOU HAVE COMPLETED THIS PROCEDURE.**

BBF8 HDSL

28. **CAUTION:**
In addition to primary lightning protection, an external Lightning and Surge Secondary Protection Assembly (ED-8C783-30 or equivalent) is required for **HDSL** *circuits used in outside plant applications.*

Determine circuit pack option switch settings from office records, work order, or old circuit pack settings.

29. Set **HDSL** option switches per Table E and Figure 3.

Table E – HDSL Control Switch Settings

Control Settings	Switch S1 Settings			
	S1-1	S1-2	S1-3	S1-4
Master	—	OFF	—	OFF
Slave	—	ON	—	ON
Local	OFF	—	OFF	—
Remote	ON	—	ON	—

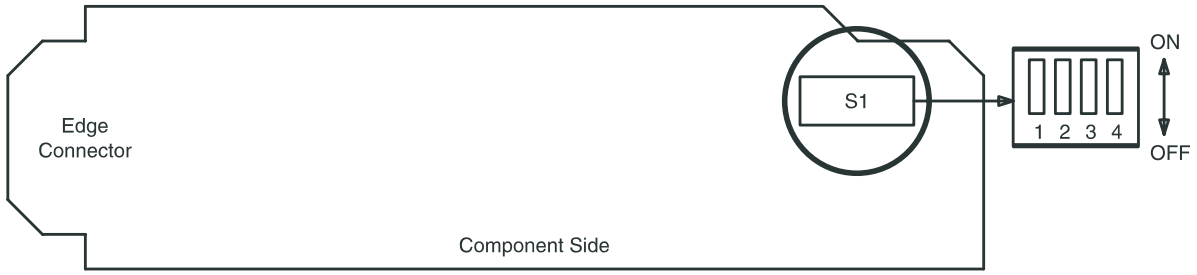

Figure 3. HDSL Control Switch

30. If a signal has previously been applied to the original **HDSL** circuit pack, the **FAULT** LED may flash when the new **HDSL** is installed until the signal tests good.

Remove old **HDSL** and install replacement **HDSL**. **FAULT** LED on the **HDSL** flashes for about 15 seconds and then goes off.

31. **STOP. YOU HAVE COMPLETED THIS PROCEDURE**

BBG4/BBG4B/BBG19 DS3

32. Determine from office records the length of the DS3 cabling between the **DDM-2000** and the **DSX-3** cross-connect point.

33. **NOTE:**
The only option settings on the **DS3** circuit pack are the LBO settings shown in Figure 4. If there are other jumpers on the circuit pack similar to the LBO jumpers, they are factory test points and should be ignored.

Refer to Table F and Figure 4 and install the DS3 option jumpers.

Table F – DS3 LBO Settings

Cable Length (Ft)		LBO Settings
734D	735A	
0 to 225	0 to 125	LBO IN (ON)
>225 to 450	>125 to 250	LBO OUT

.

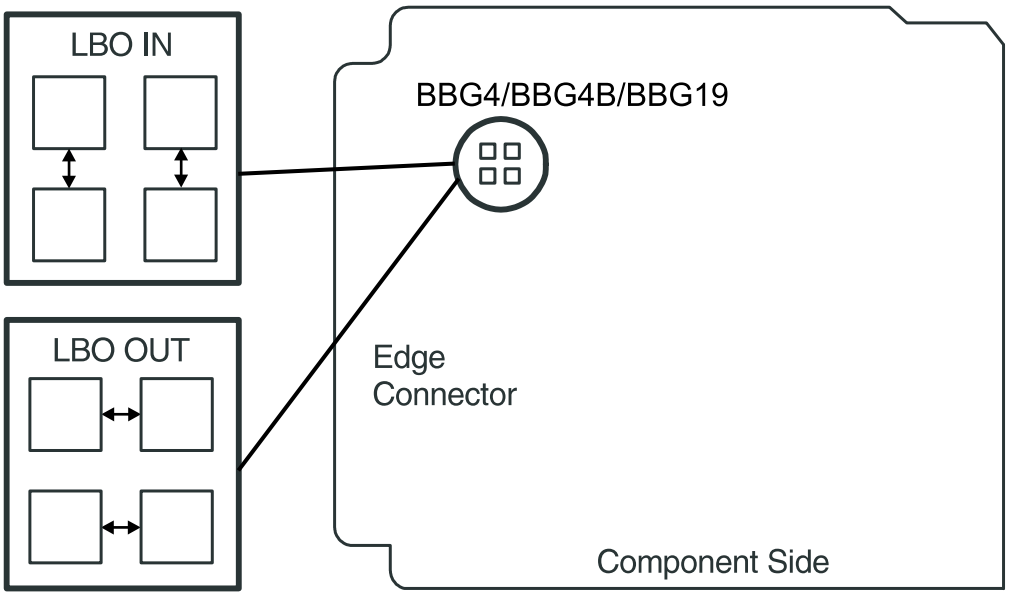

Figure 4. DS3 Option Settings

34. **NOTE:**
If signal has previously been applied to the original **DS3** circuit pack, the **FAULT** LED will flash when the new **DS3** is installed until the signal tests good.

Remove old **DS3** circuit pack and install replacement **DS3** circuit pack.

Response: **FAULT** LED on the **DS3** circuit pack flashes for about 15 seconds and then goes off

35. **STOP. YOU HAVE COMPLETED THIS PROCEDURE.**

Install User Panel and Check –48 V DC Office Battery

1. Ensure ED-8C762-30, DDM-2000 FiberReach Wideband Shelf power cables are installed on –**48V A**, –**RTN A**, –**48V B**, and –**RTN B** connectors located on backplane of shelf. See Figure 1.

2. Obtain multimeter capable of measuring DC voltage in the 40 to 60 volt range.

3. Use multimeter to measure DC voltage at backplane power connectors. Place negative probe on –**48V A** (–**48 B**) power connector and the positive probe on –**RTN A** (–**RTN B**) power connector.

   Reference: Voltage must be between –40.00 V and –60.0 V DC.

4. Was requirement met?

   If **YES**, proceed to **Step 6**.
   If **NO**, continue with **Step 5**.

5. Trouble in power feeder(s) or office battery distribution. Refer trouble to organization that installed the shelf.

6. Obtain an **ECC2 USR PNL** user panel, COMCODE 107699076. See Figure 2.

7. Are fuses installed in User Panel?

   If **YES**, continue with **Step 8**.
   If **NO**, proceed to **Step 9**.

8. Remove both of the –48 V 3-amp fuses (COMCODE 406204230) at the top of the User Panel.

9. Place the user panel into the **AUX CTL** slot and push the panel into the shelf until it is seated. Use a flat-bladed screwdriver to tighten the screw in the middle of the knob on the top front of the panel.

10. Fold down the handle and turn the knob clockwise until snug.

11. ⚠ **WARNING:**
    *–48 V DC is present in the fuse holders (***FA** *and* **FB***).*

    Install ONE of the –48 V fuses at the top of the User Panel.

12. Did fuse blow?

    If **YES**, continue with **Step 13**.
    If **NO**, proceed to **Step 16**.

13. Replace blown fuse.

    Reference: **DLP-511**

14. Did fuse blow again?

    If **YES**, continue with **Step 15**.
    If **NO**, proceed to **Step 16**.

15. Replace User Panel and repeat this procedure from **Step 7**.

16. Is **PWR ON A** or **B** LED lit?

    If **YES**, proceed to **Step 18.**
    If **NO**, continue with **Step 17.**

17. Replace User Panel and repeat this procedure from **Step 7**.

18. Have both fuses been checked?

    If **YES**, **STOP. YOU HAVE COMPLETED THIS PROCEDURE.**
    If **NO**, continue with **Step 19.**

19. Install fuse in other fuse holder and repeat this procedure from **Step 12.**

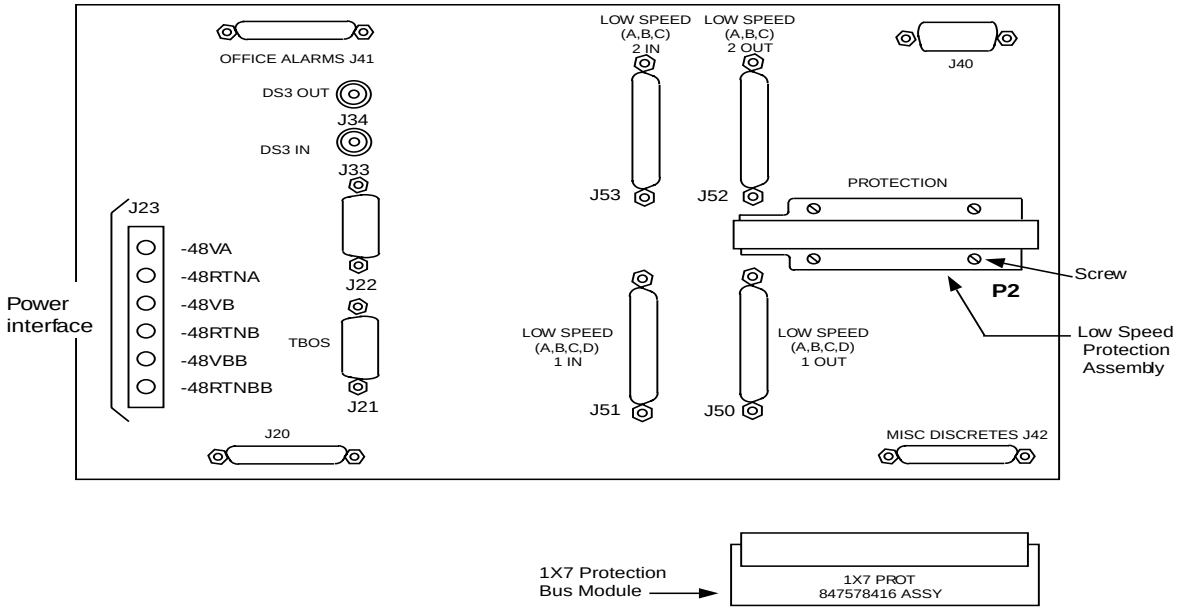

Figure 1. FiberReach Backplane Power Interface

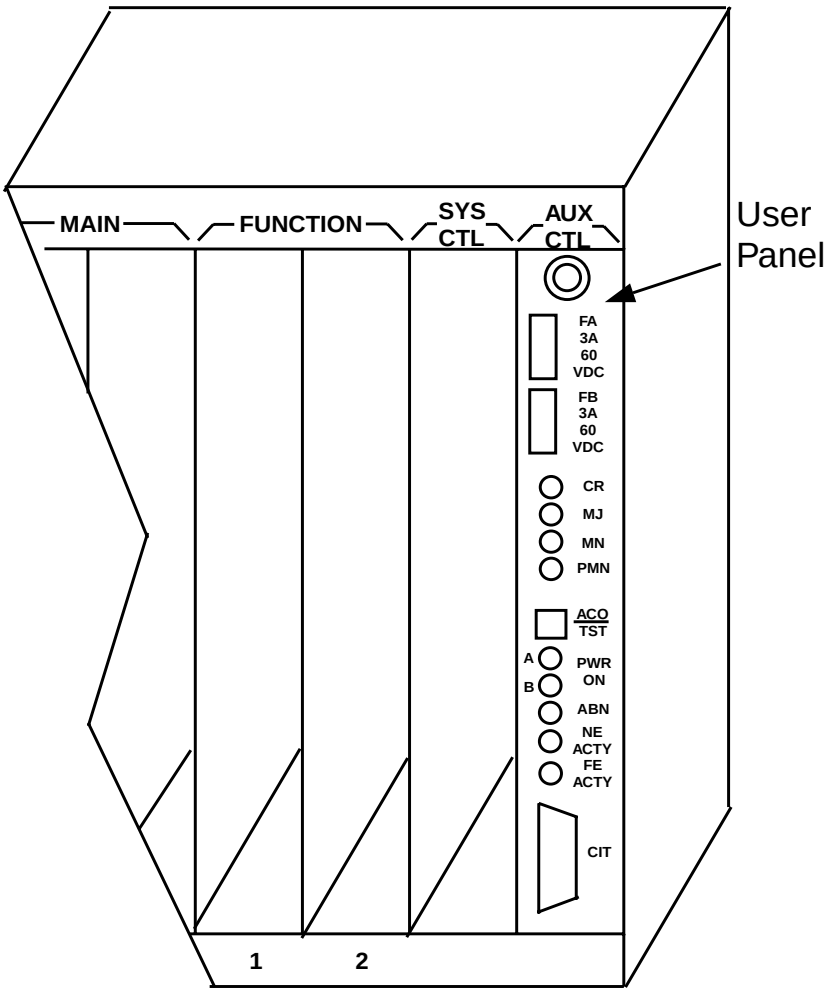

Figure 2. FiberReach ECC2 User Panel

Install Software Generic Program
Network Element Software
New Shelf Installation
Only BBG8/BBG8B SYSCTL Installed

1. **NOTE:**
This procedure is used to install a software program in a new DDM-2000 FiberReach shelf equipped only with the **BBG8/BBG8B SYSCTL** circuit pack. The circuit pack may be new from the factory or a circuit pack used previously that may already be loaded with software. For procedures to download software locally to a fully equipped in-service shelf, see **DLP-536**. For procedures to download software remotely to a fully equipped in-service shelf, see **DLP-537**.

NOTE:
It is assumed that the **BBG8/BBG8B SYSCTL** circuit pack has been installed per **DLP-539**.

NOTE:
If you are using a PC operating in a *Windows* environment, you must **exit** *Windows* and restart your PC in MS-DOS mode before performing these download procedures. For example, if your PC is running *Windows* 95 you must exit *Windows* by clicking on the **Start** button, then **Shut Down**, then **Restart the computer in** MS-DOS **mode**.

Obtain equipment, check software, and connect PC for download.

Reference: **DLP-541**.

2. Observe one of the following indications on the FE ID display. Note the indication and follow the suggested procedure.

- **Letter "P" in FE ID Display:**

  Indicates no software installed in **SYSCTL**. Software must be downloaded locally using these procedures.

  Continue with **Step 3**.

- **Letter "P." in FE ID Display:**

  Letter "**P**" followed by a period (**.**) indicates a previous download attempt has failed. New software must be downloaded locally using these procedures.

  Proceed to **Step 6**.

- **Letter "U" in FE ID Display:**

  Indicates **SYSCTL** switches **S1** and **S2** are not set properly for type of shelf being equipped.

  Remove **SYSCTL**. Repeat procedures of **DLP-539** to correct switch settings and to install **SYSCTL**.

- **Letter "E" in FE ID Display:**

  Indicates **SYSCTL** must be replaced.

  Get replacement **SYSCTL** and repeat procedures of **DLP-539.**

- **Letter "F" in FE ID Display:**

  Indicates **SYSCTL** faceplate latch is not fully latched.

  Unplug **SYSCTL** and repeat procedures of **DLP-539**. Ensure you properly latch the faceplate when installing **SYSCTL**.

- **Flashing Letter "L" in FE ID Display:**

  Indicates a low voltage condition (brownout) on the shelf.

  Clear trouble using **Trouble Clearing: TAP-119**.

Letter "P" in FE ID Display:

3. Ensure PC is connected to the front **CIT** (CIT-1) connector of shelf receiving software. If floppies are being used, ensure the first (number 1) diskette is installed in floppy drive. If hard drive is being used, ensure you are in the correct directory.

4. **NOTE:**
After the terminal emulator (**term**) is started, the software download automatically begins. The download may take up to 45 minutes.

Enter `term` or `term` **`COM`***n* command, where *n* = 1 or 2. If **`term`** is entered without the **`COM`***n* option, then **`COM1`** will be selected by default. Disregard message "`Can't find script <init>`" if you see it after starting the terminal emulator.

Response: Two brief messages are printed and you are instructed to `Press any key to continue` . . . after the second message. After you press any key, the terminal emulator is loaded and the terminal responds as follows within 2 minutes:

```
CTRM ready. (Type Alt-h for help.)
Communications established.

Searching for optimal transfer rate. Handshake
established at <baudrate> baud.

In progress . . . .
```

The dots continue to print until program installation is complete. If using floppies, insert each diskette when prompted. After installation is completed, the PC prints the following completion message:

```
ins-prog:TID COMPLD
/* Generic a.b.c is installed */
```

The **SYSCTL** resets and the terminal is logged off the system.

5. Was response correct?

If **YES**, **STOP. YOU HAVE COMPLETED THIS PROCEDURE.**
If **NO**, proceed to **Step 10**.

Letter "P." in FE ID Display:

6. Ensure PC is connected to the front CIT (CIT-1) connector of shelf receiving software. If floppies are being used, ensure the first (number 1) diskette is installed in floppy drive. If hard drive is being used, ensure you are in the correct directory.

7. Enter **term** or **term COM***n* command, where *n* = 1 or 2. If `term` is entered without the **COM***n* option, then **COM1** will be selected by default. If after starting the terminal emulator you see the message "`Can't find script <init>`", disregard it.

   Two brief messages are printed and you are instructed to `Press any key to continue . . .` after the second message. After you press any key, the terminal emulator is loaded and the terminal responds as follows:

   ```
   CTRM ready. (Type Alt-h for help.)
   Communications established.
   ```

8. Unplug and reseat the **SYSCTL** and immediately push and hold the **FE SEL** and **UPD/INIT** buttons at the same time until a **P** appears in the **FE ID** display (approximately 15 seconds). Software download may take up to 45 minutes.

   Response: PC starts download and prints the following message:

   ```
   Searching for optimal transfer rate. Handshake
   established at <baudrate> baud.

   In progress . . . .
   ```

   The dots continue to print until program installation is complete. If using the floppy disks, insert each diskette when prompted. After installation is completed, the PC prints the following completion message:

   ```
   ins-prog:TID COMPLD
   /* Generic a.b.c is installed */
   ```

   The **SYSCTL** resets and the terminal is logged off the system. After approximately three minutes, you can log into the system.

9. Was response correct?

   If **YES**, **STOP. YOU HAVE COMPLETED THIS PROCEDURE.**
   If **NO**, continue with **Step 10**.

10. Did the download start as indicated by the `In Progress` message and rows of dots?

    If **NO**, continue with **Step 11**.
    If **YES**, proceed to **Step 18**.

11. Check that the DDM-2000 is connected to the PC through the **COM** port. If it is not, reconnect the PC to DDM-2000 using the **COM** port and repeat the procedure.

    If the download still does not start, as indicated by the `In Progress` message and rows of dots, within 2 minutes after the **P** appears in the **FE ID** display, change the CTRM baud rate as follows and repeat this procedure. If the baud rate is currently set to 9600, change it to 4800 or if the baud rate is currently set to 4800, change it to 9600. The baud rate is changed by:

    1. Momentarily depress the "Alt C" keys.
    2. Using the RETURN key to move to the "Speed" field.
    3. Pressing the "Space" bar until the desired rate appears.
    4. Momentarily depressing the "Escape/Esc" key to activate the new baud rate.

12. Ensure first (number 1) disk of program being installed is inserted, if using floppies.

13. Ensure diskette is inserted in correct drive.

14. Ensure the proper command was used to go to the drive with the diskette or to the proper directory containing the software.

15. Check for invalid COM port. Exit TERM (Alt-F2); then restart TERM using **term COM1** or **term COM2**.

16. If the download still does not start, refer to **Trouble Clearing: TAP-116**.

17. **STOP. YOU HAVE COMPLETED THIS PROCEDURE.**

18. If the download *starts and fails* during its progress, exit `term` (Alt-F2) and repeat this procedure from **STEP 6**.

    If the download still does not start, refer to **Trouble Clearing: TAP-116**.

19. **STOP. YOU HAVE COMPLETED THIS PROCEDURE.**

Make VT1.5 (DS1) or STS1 Cross-Connections Using CIT Single/Dual Homing OC3/OC-1 or OC-12/OC1 Ring Configuration

1. **NOTE:**
   If you are not familiar with doing cross-connections using the CIT commands, it is strongly suggested that you read *Cross-Connection Provisioning* in the "Administration and Provisioning" section of this manual. Also, read the description of the following commands in the "Commands and Reports" section of this manual and the DDM-2000 OC-3 manual: **`ent-crs-sts1`**, **`ent-crs-vt1`**, **`rtrv-crs-sts1`**, **`rtrv-crs-vt1`**, **`dlt-crs-sts1`**, and **`dlt-crs-vt1`**.

   NOTE:
   You will have to log in to more than one node in each ring to get a complete map of the network using the **`rtrv-map-network`** and **`rtrv-map-neighbor`** command. If a drawing of the network is not provided with the work order, it is recommended that you draw a simple schematic of the network before making cross-connections.

   Make a simple drawing of the network and list the TID of each node and how they are connected to each other. Figure 1 shows an example of a simple schematic.

   Log in to any node in each ring in the network and use the **`rtrv-map-network`** and/or **`rtrv-map-neighbor`** command to retrieve a map of the network which lists all the systems and how they are connected to each other.

   Sample output reports are shown in Figures 2, 3, and 4.

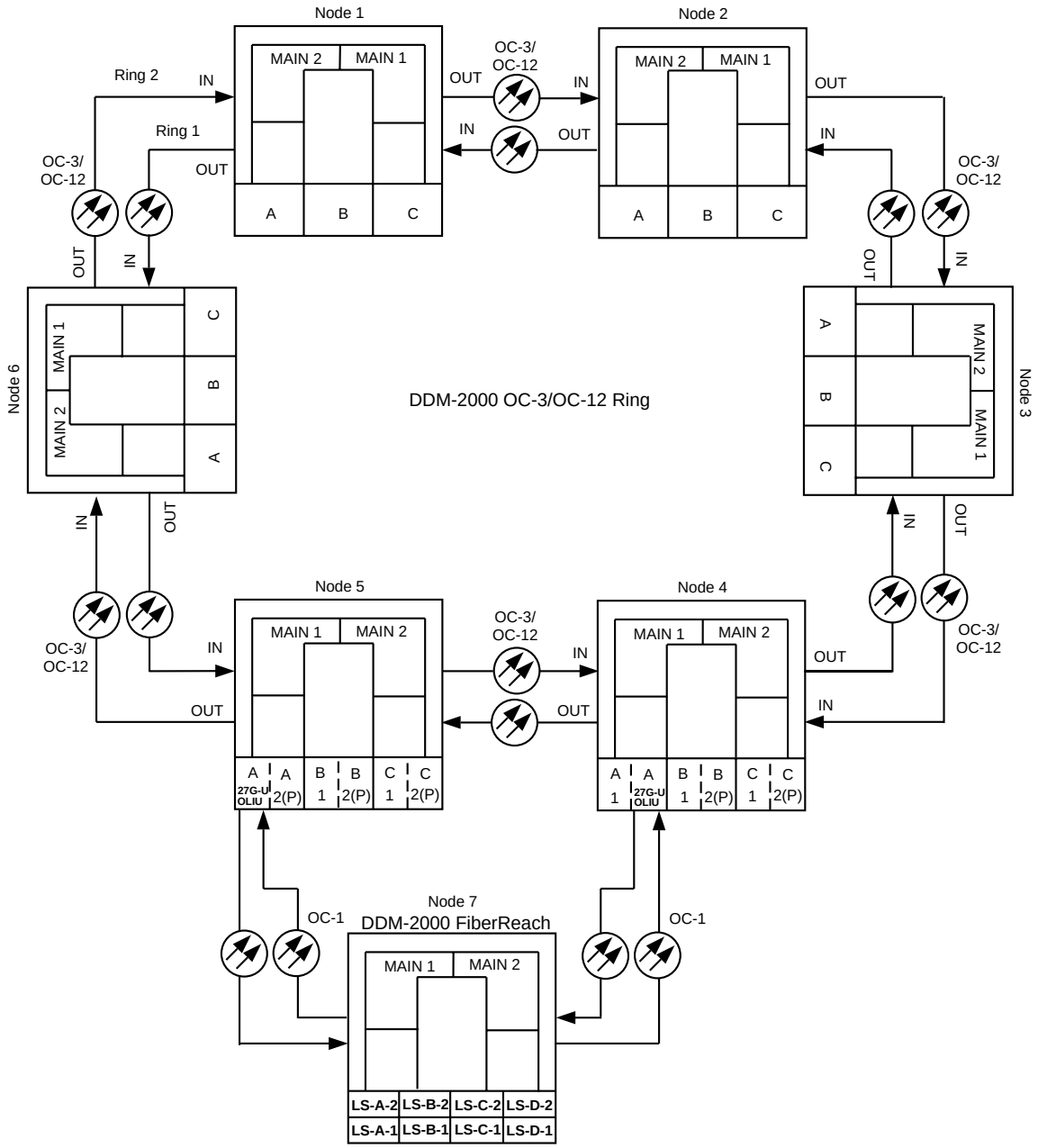

Figure 1. Sample Network Schematic

```
/* Neighbor Map for Site6NE1
====================================================================
TID                          Product Type            Level 2 IS
NSAP
====================================================================
Site6NE1                     FiberReach
 39 840F 80 000000 0000 0000 0000 08006alad06e 00
R5
 39 840F 80 000000 0000 0000 0000 00000e3a0273 00
R6
 39 840F 80 000000 0000 0000 0000 00000e3a0273 00
R7
 39 840F 80 000000 0000 0000 0000 00000e3a0273 00
Site3NE1                                                  Y
 39 840F 80 000000 0000 0000 0000 00000e3a0372 00
Site7NE1
 39 840F 80 000000 0000 0000 0000 08006alad06f 00

*/
```

Figure 2. Sample Report From `rtrv-map-network` Command

```
/* Network Map for Site6NE1
====================================================================
TID                  Connected Thru    Product Type    Level 2 IS
NSAP
====================================================================
Site6NE1                                FiberReach
 39 840F 80 000000 0000 0000 0000 08006alad06e 00
Site7NE1               main-1
 39 840F 80 000000 0000 0000 0000 08006a1ad06f 00
Site5NE1               main-2
 39 840F 80 000000 0000 0000 0000 00000e3a0372 00
*/
```

Figure 3. Sample Report From `rtrv-map-neighbor` Command (Release 3.0)

```
/* Network Map for Site6NE1
=====================================================================
TID                  Connected Thru    Product Type    Level 2 IS  DCC
NSAP
=====================================================================
Site6NE1                               FiberReach
 39 840F 80 000000 0000 0000 0000 08006alad06e 00
Site7NE1               main-1
 39 840F 80 000000 0000 0000 0000 08006a1ad06f 00
Site5NE1               main-2                          ?           N
 39 840F 80 000000 0000 0000 0000 00000e3a0372 00
*/
```

Figure 4. Sample Report From `rtrv-map-neighbor` Command (Release 3.1 and Later)

2. Verify system configuration is same as specified on work order or circuit order. For example, see Figures 5 through 13.

3. **NOTE:**
   Cross-connections consist of drop and pass-through connections. For example, in Figure 5, drop connections are made at Nodes 1, 4, 5, and the FiberReach node. Pass-through cross-connections are made at Nodes 2, 3, and 6. Also, cross-connections must be made in all interconnected rings, including other DDM-2000 OC-3 rings, DDM-2000 OC-12 rings, and FT-2000 OC-48 rings, as required.

   From work order or circuit order, determine the terminating (drop) nodes for the service being established.

4. From work order, circuit order, and the sketch made in Step 1, determine the pass-through nodes for the service being established.

5. From work order or circuit order, determine the host OC-3 or OC-12 node(s) that connects to the OC-1 FiberReach ring(s).

6. **NOTE:**
The **`cct`** parameter of the **`ent-crs-vt1`** command specifies the cross-connect type. The valid values are **`two-way`**, **`dc`**, and **`locked`**. Two-way applies to add/drop, hairpin, 0X1 ring, and pass-through connections. The **`dc`** parameter applies to dual ring interconnection (DRI) applications. The **`locked`** parameter supports non-path-switched DS1 applications where a DS1 is cross-connected to a specified channel in a specified direction of the ring interface (Figure 13). Provisioned AIS or unequipped signal is transmitted in the other direction around the ring, but is not alarmed at any pass-through nodes or the other terminating node with locked cross-connections present for the same channel. Any signal received in the same channel from the other ring interface is ignored.

Determine the cross-connect type (**`cct`**) to be made at each node for the service being established.

7. **NOTE:**
In dual homing configurations (Figures 5 and 6), **OLIU** circuit packs must be installed in the correct slots in the host OC-3 nodes to support the direction of traffic required. For example in Figure 5, for traffic to be routed between Node 1 and the FiberReach system, the **27G-U/27G2-U OLIU** must be installed in **FUNCTION UNITS** GROUP **A, B,** or **C**, slot **1** of Node 5 and **FUNCTION UNITS** GROUP **A, B,** or **C**, slot **2(P)** of Node 4. This is required because traffic entering Node 5, slot **FUNCTION UNITS-A-1** from the FiberReach shelf is automatically connected to the **MAIN-1 OLIU** when cross-connections are made. Traffic entering slot **FUNCTION UNITS-A-2(P)** is automatically connected to the **MAIN-2 OLIU**.

NOTE:
In single homing configurations (Figure 9), the **27G-U/27G2-U OLIU** in **FUNCTION UNITS** GROUP **A, B,** or **C**, slot **1** of the OC-3 shelf must be connected to the **MAIN-1 OLIU** in the FiberReach shelf. The **27G-U/27G2-U OLIU FUNCTION UNITS** GROUP **A, B,** or **C**, slot **2(P)** of the OC-3 shelf must be connected to the **MAIN-2 OLIU** in the FiberReach shelf.

Use the **`rtrv-eqpt:`** command at each node in the network to verify that each shelf is properly equipped for the service being established. Ensure that **OLIU** circuit packs are installed in the correct slots in the host OC-3 nodes.

8. **NOTE:**
Cross-connections supporting DS1 services may be either STS1 or VT1.5 cross-connections in DDM-2000 OC-3. Only VT1.5 cross-connections are allowed in DDM-2000 FiberReach. In an OC-3 shelf, use VT1.5 cross-connections for DS1 services if you expect to cross-connect only a portion of the VT1.5 signals in the STS-1 channel. If STS1 cross-connections are made at an OC-3 shelf, there is a fixed mapping of all 28 VT1.5 cross-connections to a specific shelf group [see **`ent-crs-sts1`** command].

NOTE:
The following commands may be used to delete, enter, and retrieve cross-connections: **`dlt-crs-vt1`**, **`dlt-crs-sts1`** , **`ent-crs-vt1`**, **`ent-crs-sts1`**, **`rtrv-crs-vt1`**, and **`rtrv-crs-sts1`** . See the "Commands and Reports" section of each system manual for a description of commands.

NOTE:
In ring configurations, you should use the following rules in establishing cross-connections in each ring:

1. All terminating drop connections (including DRI drop and continue, if present) from the same STS-1 timeslot must be provisioned the same, either all VT1.5 or STS-1.
2. If all 28 VT1.5s (DS1s) in an STS-1 are being passed through at a node in a VT1.5 path-switched ring, then the cross-connection may be provisioned as either a pass-through STS-1 or VT1.5. However, if you anticipate dropping VT1.5s from the pass-through node in the future, you should provision the pass-throughs as VT1.5 cross-connections. Provisioning now as a VT1.5 cross-connect will avoid a hit on traffic if the STS-1 cross-connect has to be converted to 28 VT1.5 cross-connects to drop DS1s at a later time.
3. On STS-1 path-switched rings, all nodes in the ring must be provisioned as STS-1 cross-connections.

From work order or circuit order, determine the cross-connections [STS-1 or VT1.5] to be made at each node [pass-through, terminating (drop), and host OC-3 node(s)] associated with the kind of service being established.

9. Starting at one of the terminating nodes for the DS1 circuit being established, use the **`rtrv-crs-( ):`** command at each node in the ring to verify that the cross-connections specified on the work order or circuit order may be made. For example, if the DS1 #1 low speed port in the **DS1** circuit pack in slot #1 of LOW SPEED group A (a-1-1) is to be connected to timeslot m-1-1-1 and the **`rtrv-crs-vt1`** command shows that the cross-connection is already established, you should determine from office records if this port is already in-service before continuing with this procedure.

   If cross-connections are already assigned or improperly assigned, refer trouble to the organization responsible for facility design. Improperly assigned cross-connections may have to be deleted using the **`dlt-crs-( )`** commands.

10. **NOTE:**
    Channel state provisioning provides IS, AUTO, and NMON states for VT channels similar to the port states for DS1 ports. When a cross-connection is made to a point of termination the channel is in the AUTO state and alarming is disabled. The channel must receive a good signal from either ring to cause the channel to transition to in-service (IS).

    At all nonterminating pass-through nodes in the network, use the **`ent-crs-vt1:`** or **`ent-crs-sts1:`** command to provision pass-through connections. [For example, to make the DS1 pass-through cross-connection for channel m-1-1-1, use the **`ent-crs-vt1:m-1-1-1,m-1-1-1:cct=twoway`** command. To make pass-through cross-connections for STS-1 #1 in an OC-3 shelf, use the **`ent-crs-sts1:m-1,m-1:cct=twoway`** command.]

11. At both terminating (drop) nodes of the circuit being established, use the **`ent-crs-vt1:`** command to make the terminating cross-connections (for example, Node 1 and FiberReach node in Figure 5, **`ent-crs-vt1:m-1-1-1,a-1-1:cct=twoway`**)

12. At the host OC-3 ring node sites, make proper cross-connections. For example, in Figure 5, at Node 5, if VT1.5 channel #1, VTG #1, STS #1 from the **MAIN 1 OLIU** is to be cross-connected to function group A, OC-1 line #1, then the command **`ent-crs-vt1:m-1-1-1,a-1-1-1:cct=twoway`** would be used to make the cross-connection.

13. Use the **`rtrv-crs-vt1:`** or **`rtrv-crs-sts1:`** command to verify that the proper connections have been made. If an improper cross-connection is made, use the **`dlt-crs-vt1:`** or **`dlt-crs-sts1:`** command to delete the improper cross-connection and reenter the cross-connection.

14. After all cross-connections are made, use the **`rtrv-alm:`** command to verify no alarms are present.

15. If `ne-acty` `inc. VT AIS`, `inc. STS1 AIS`, `inc. VT unequipped`, or `inc. STS1 unequipped` alarms are present, look for missing or improperly made cross-connections. Use **TAP-118** to locate missing cross-connections, if required.

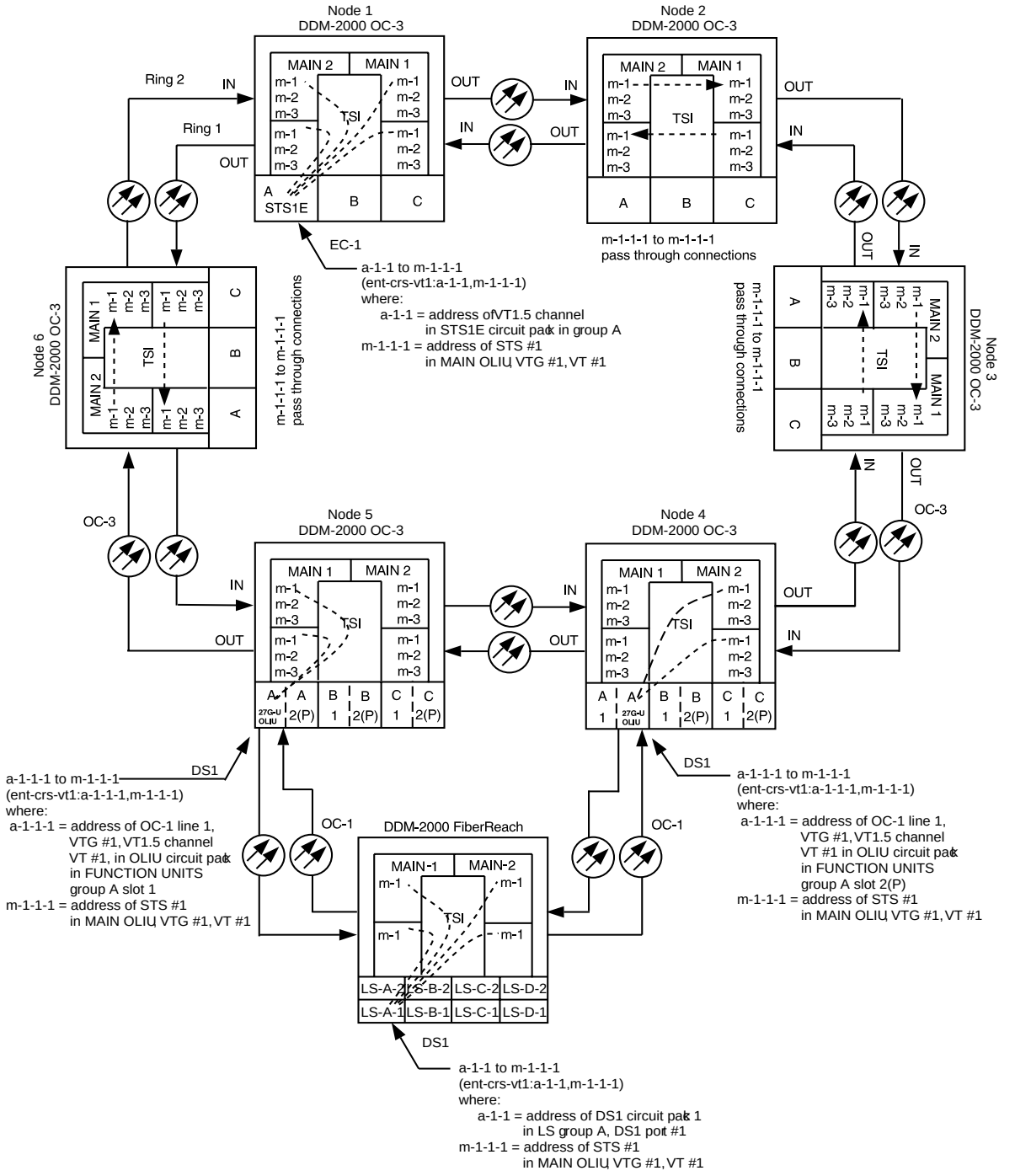

Figure 5. Example of Dual Homing OC-3/OC-1 Cross-connections

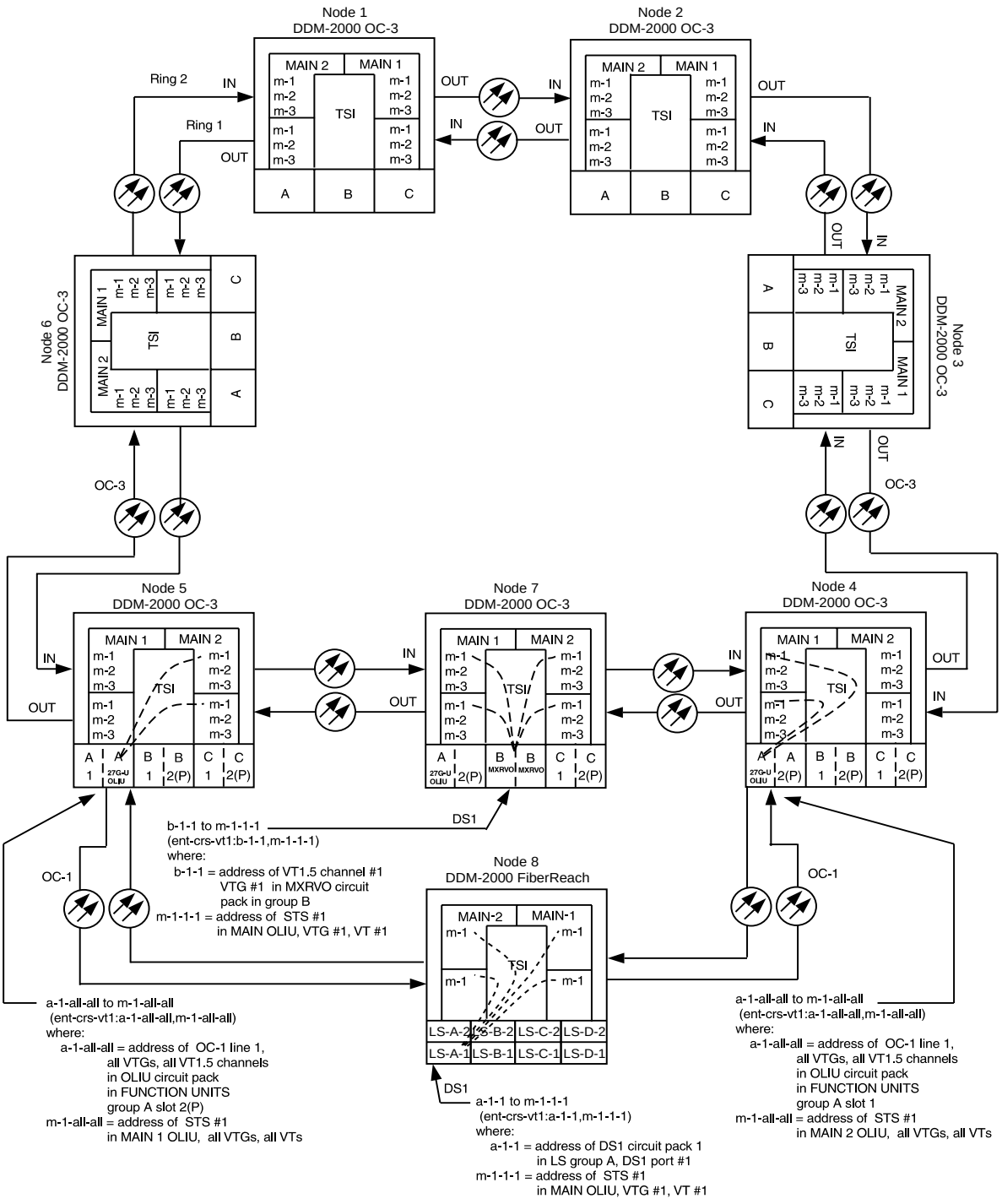

Figure 6. Example of Dual Homing OC-3/OC-1 Cross-connections

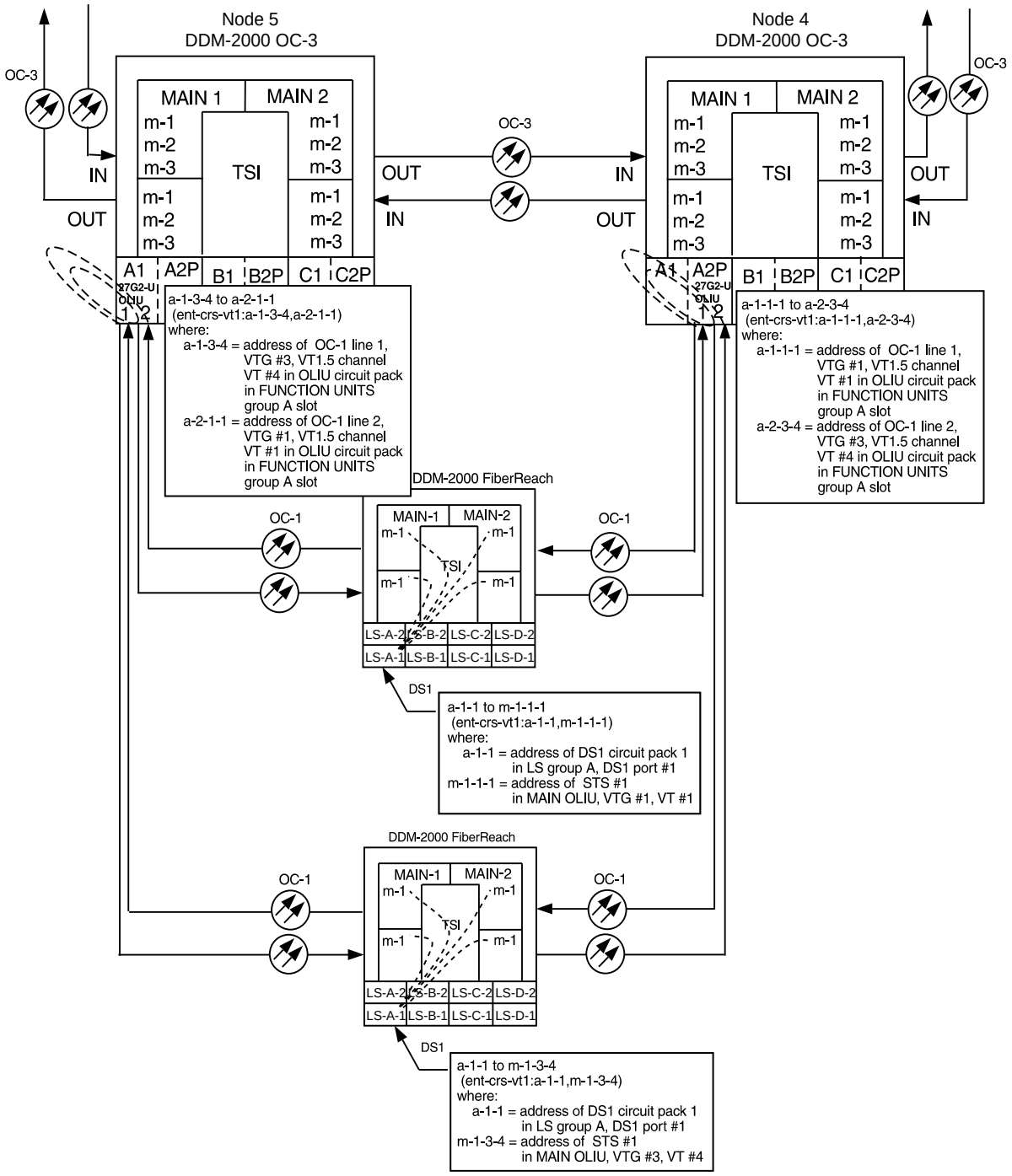

Figure 7. Example of Dual Homing Intra-Function Unit OC-3/OC-1 Cross-connections

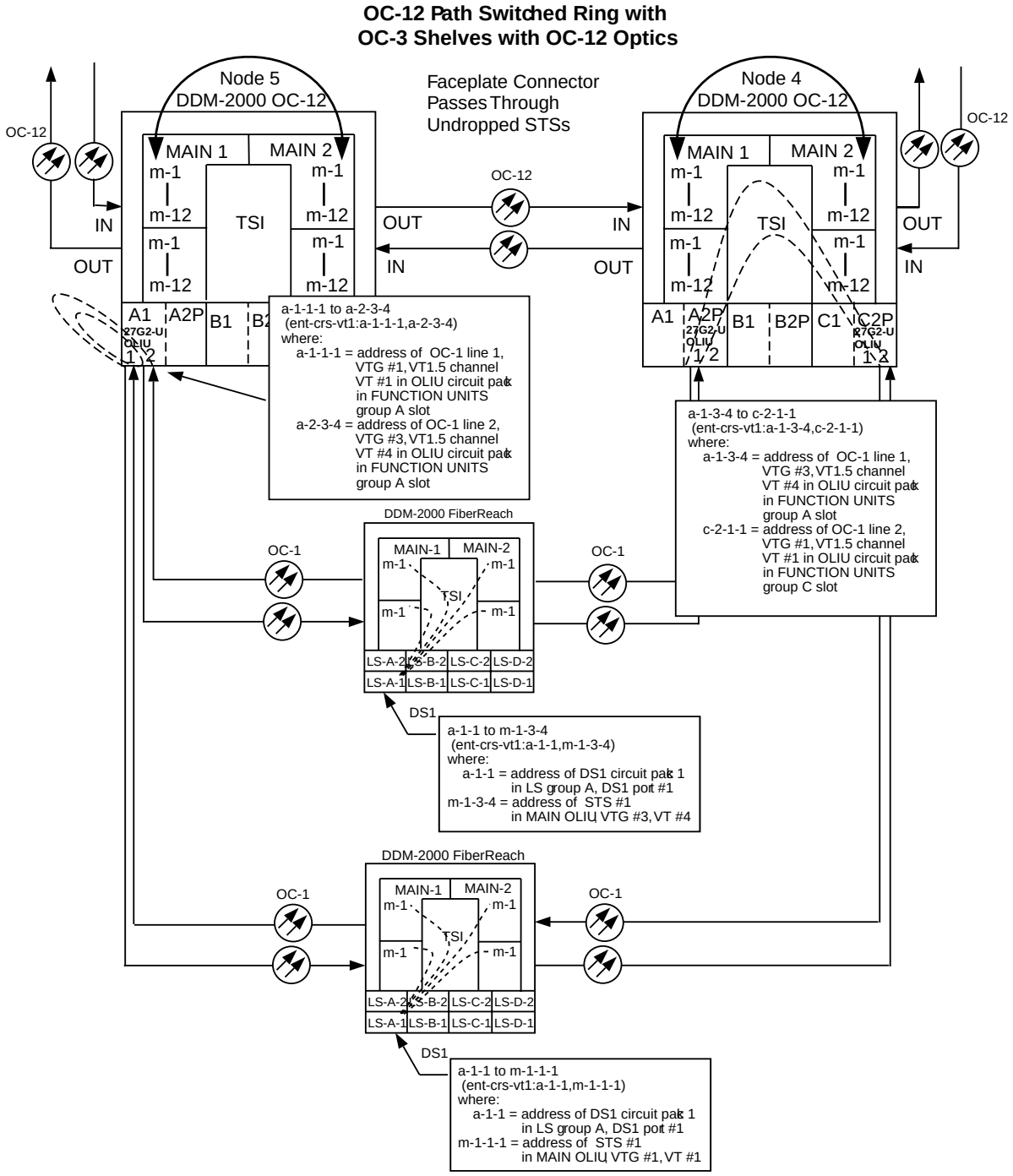

Figure 8. Example of Dual Homing Intra- and Inter-Function Unit OC-12/OC-1 Cross-connections

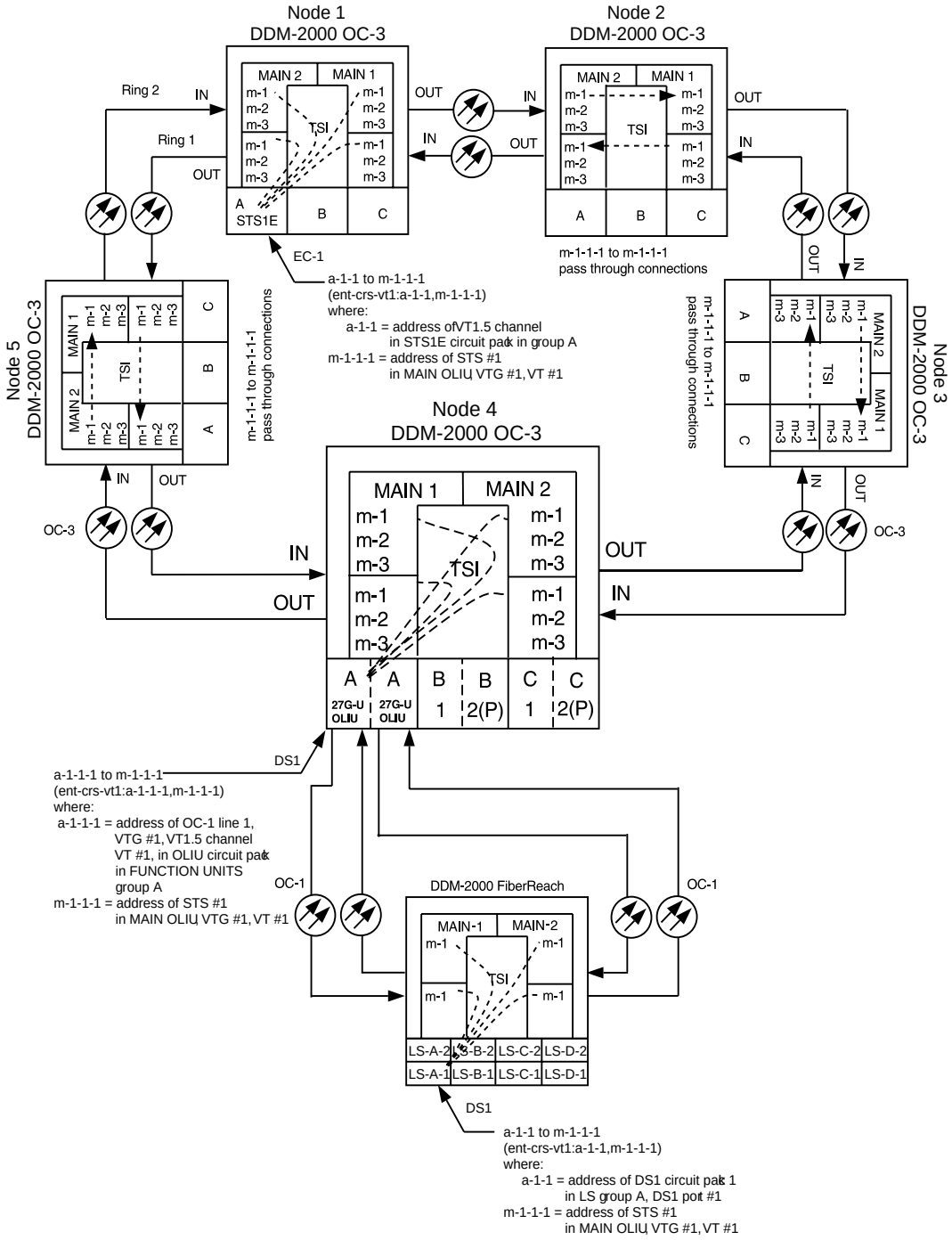

Figure 9. Example of Single Homing OC-3/OC-1 Cross-connections

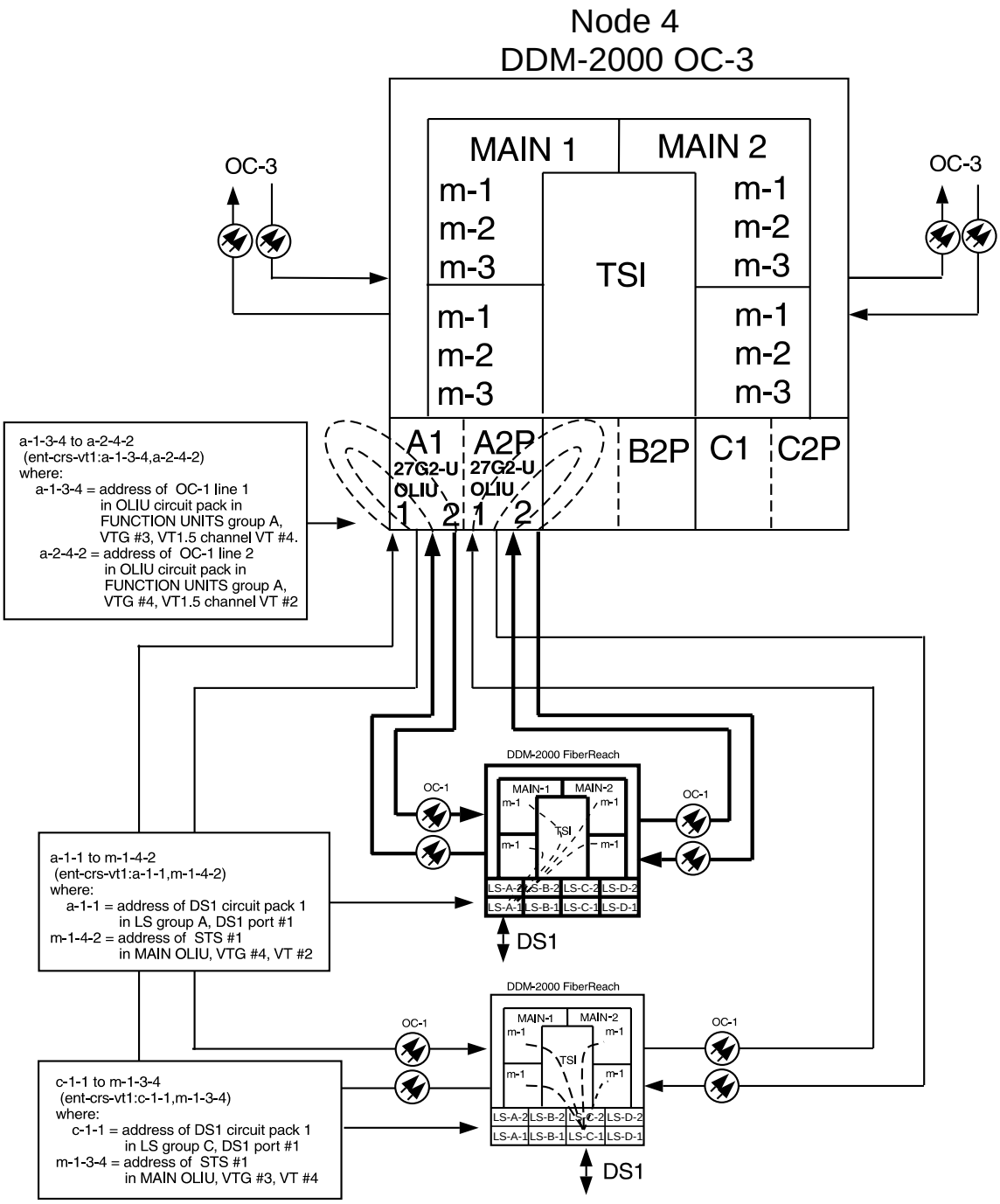

Figure 10. Example of Single Homing Intra-Function Unit OC-3/OC-1 Cross-connections

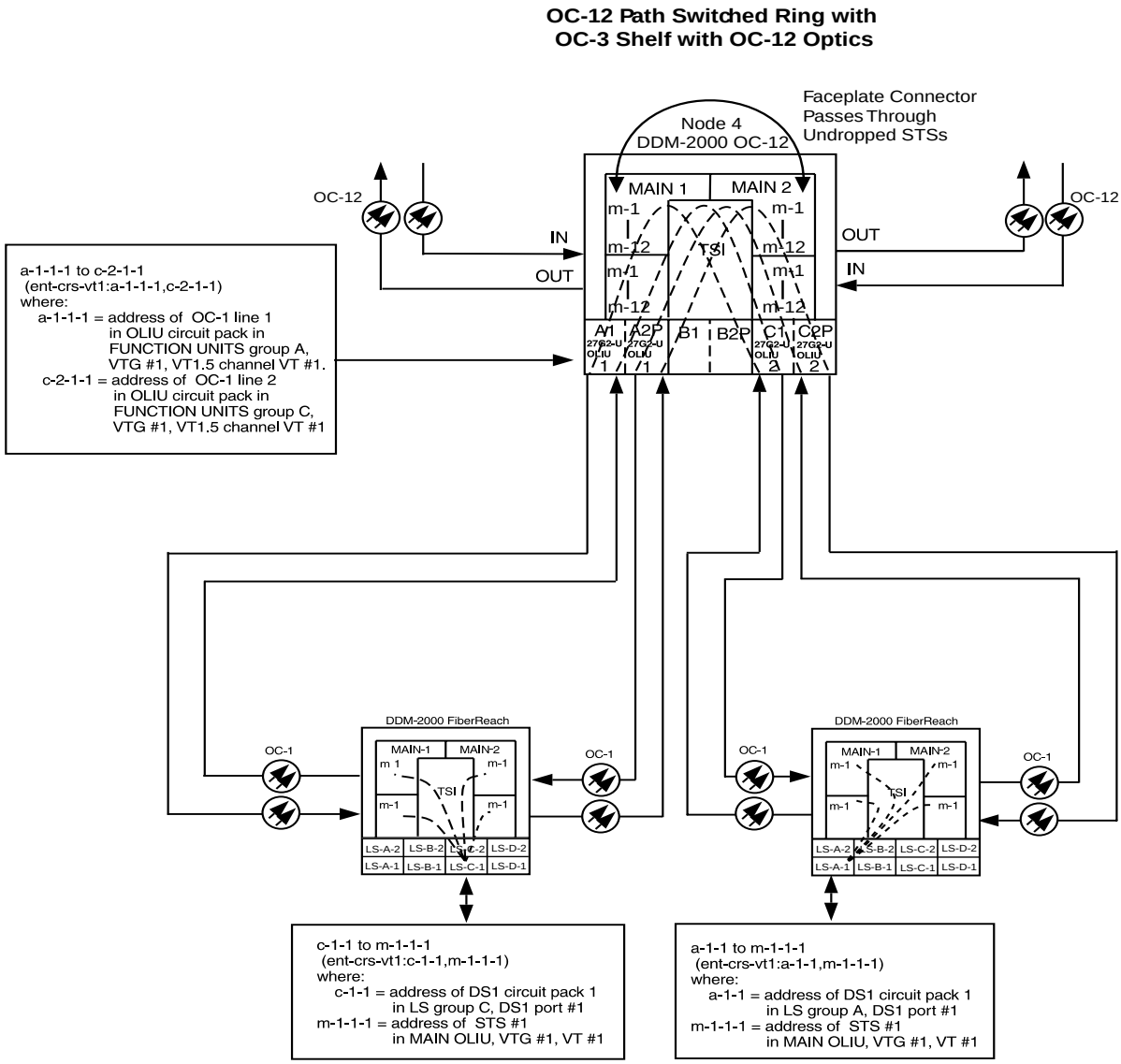

Figure 11. Example of Single Homing Inter-Function Unit OC-12/OC-1 Cross-connections

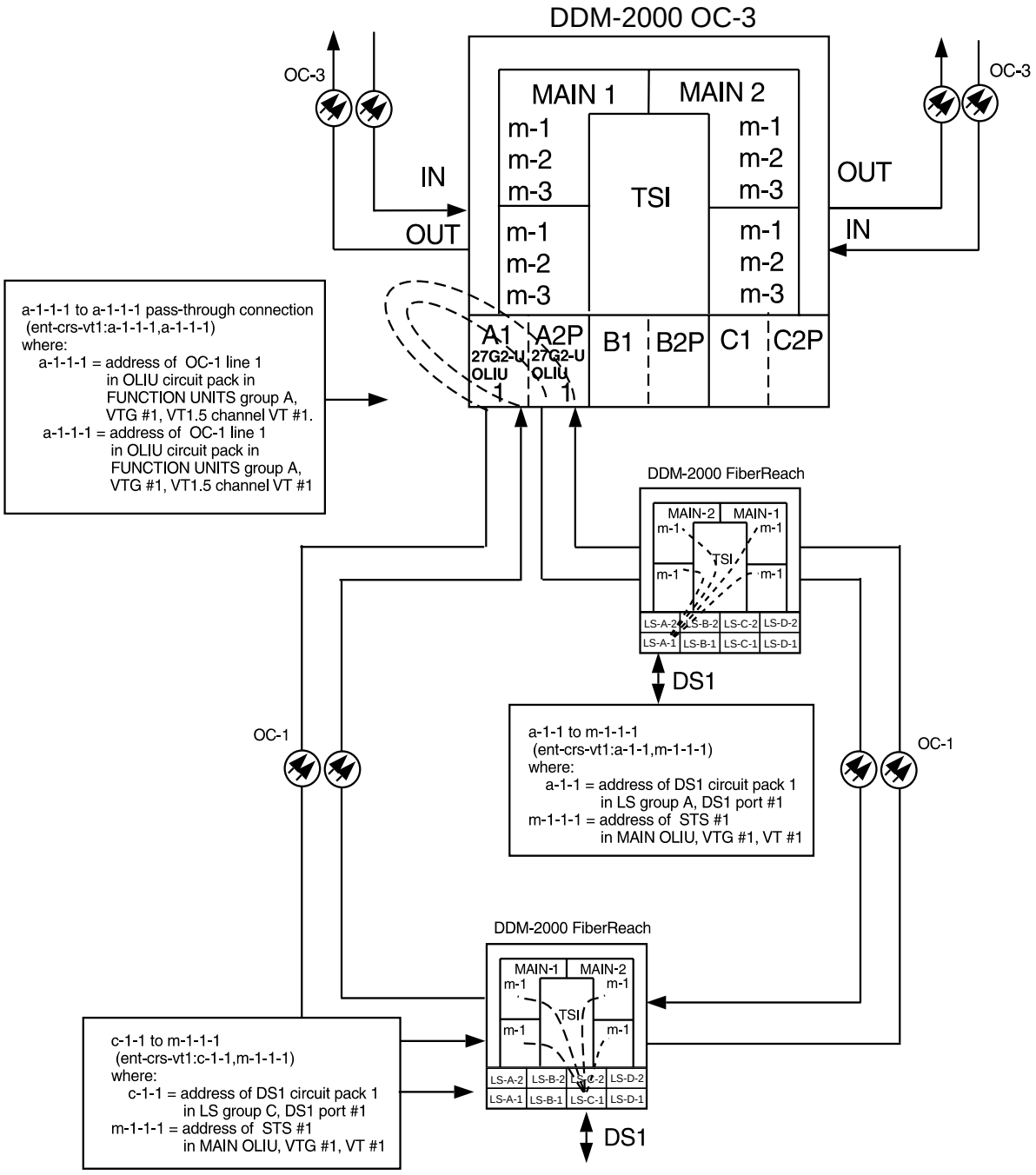

Figure 12. Example of Single Homing Intra-Ring Hairpin OC-3/OC-1 Cross-connections

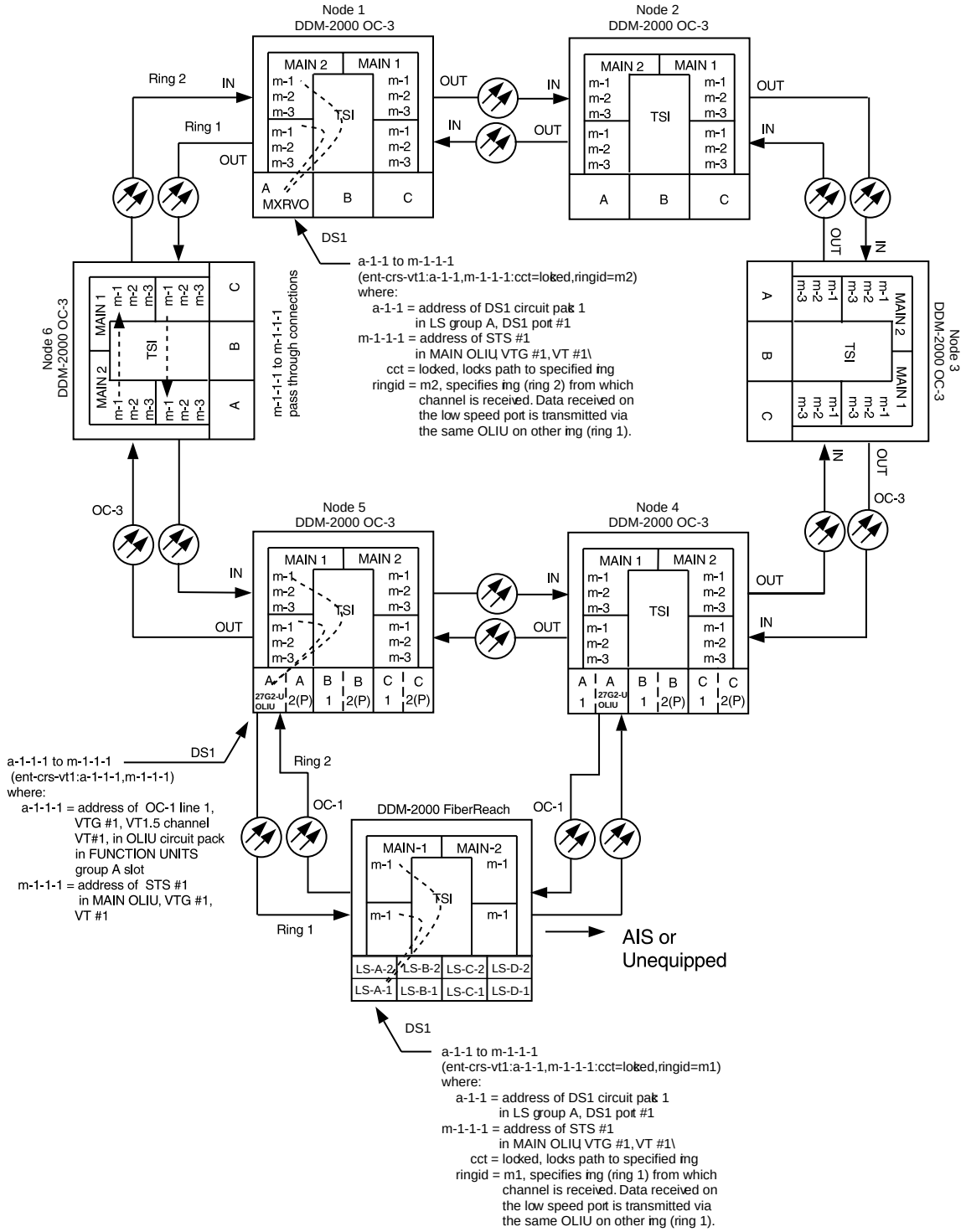

Figure 13. Example of Locked Cross-connections

Clean Optical Fibers, Connectors, and Lightguide Buildouts (LBOs)

1. **WARNING:**
   Unterminated optical connectors may emit invisible laser radiation. Avoid direct exposure to the beam. Do not view beam with optical instruments. Use of controls, adjustments, or performance of procedures other than those specified herein may result in hazardous radiation exposure.

   NOTE:
   All optical fiber connectors (SC, FC/PC, and *ST*® types), LBOs, and buildout blocks or equivalent should be cleaned before making initial connections or reconnections per the following instructions. Only the components being assembled at this particular time should be cleaned.

   NOTE:
   Keep all dust caps and plugs in place until time to make connections.

   Clean optical fibers and connectors on **OLIU** or LBOs.

   If **22D-U/22F-U/22F2-U/22G-U/22G2-U/2G3-U/22G4-U/26G-U/ 26G2-U/28G-U/28G2-U/ 29G-U/29H-U OLIU** using universal LBOs, proceed to **Step 2**.
   If in-line **LBO**s, proceed to **Step 10**.
   If **lightguide fibers**, proceed to **Step 16**.

2. Remove lightguide connector from buildout (if necessary).

3. Remove LBO from buildout block by unlocking tab and pushing in and turning in counter-clockwise direction (if necessary).

   Reference: **DLP-503**

4. Clean the end and the sides of the connectors, buildouts, and blocks with a lint-free, optical quality tissue dampened with isopropyl alcohol.

5. Carefully wipe the connector, buildouts, and blocks again with a clean, dry, lint-free optical quality tissue.

6. Blow any lint or dust from the connectors, buildouts, and blocks using canned air held at least 3 inches (8 cm) away.

7. Clean the inside of the block using a pipe cleaner moistened with isopropyl alcohol.

8. Blow any lint or dust from inside the block, using canned air at least 3 inches (8 cm) away.

9. **STOP. YOU HAVE COMPLETED THIS PROCEDURE.**

10. Is LBO 0 dB or attenuated?

    If **0 dB LBO**, proceed to **Step 11**.
    If **attenuated LBO**, proceed to **Step 14**.

11. Clean LBO by placing a pipe cleaner, moistened with isopropyl alcohol, inside LBO and rotating the pipe cleaner.

12. Blow any lint or dust from inside the LBO, using canned air at least 3 inches (8 cm) from LBO.

13. **STOP. YOU HAVE COMPLETED THIS PROCEDURE.**

14. ⚠ **CAUTION:**
    Attenuated LBO has lens. Do not use pipe cleaner.

    Clean LBO by canned air only. Blow any lint or dust from inside LBO, using canned air at least 3 inches (8 cm) from LBO.

15. **STOP. YOU HAVE COMPLETED THIS PROCEDURE.**

16. Clean fiber-end face and sides of connector with lint-free, optical quality tissue moistened with isopropyl alcohol.

17. Carefully wipe fiber-end face and sides of connector again with clean, dry, lint-free optical quality tissue.

18. Blow any lint or dust from fiber-end face and sides of connector using canned air at least 3 inches (8 cm) from connector.

19. **STOP. YOU HAVE COMPLETED THIS PROCEDURE.**

Make VT1.5 (DS1) Cross-Connections Using CIT Stand Alone OC-1 Ring Configuration

1. **NOTE:**
   This procedure may also be found in 363-206-285, *DDM-2000 OC-3 Multiplexer, TARP Release 13 and Later, User/Service Manual (TOP) - Volume II*.

   NOTE:
   If you are not familiar with doing cross-connections using the CIT commands, it is strongly suggested that you read *Cross-Connection Provisioning* in the "Administration and Provisioning" section of this manual. Also, read the description of the following commands in the "Commands and Reports" section of this manual: **`ent-crs-vt1`**.

   NOTE:
   You will have to log in to more than one node in each ring to get a complete map of the network using the **`rtrv-map-network`** and **`rtrv-map-neighbor`** command. If a drawing of the network is not provided with the work order, it is recommended that you draw a simple schematic of the network before making cross-connections.

   Make a simple drawing of the network and list the TID of each node and how they are connected to each other. Figure 1 shows an example of a simple schematic.

   Log in to any node in the ring and use the **`rtrv-map-network`** and/or **`rtrv-map-neighbor`** command to retrieve a map of the network which lists all the systems and how they are connected to each other. Sample output reports are shown in Figures 2, 3, and 4.

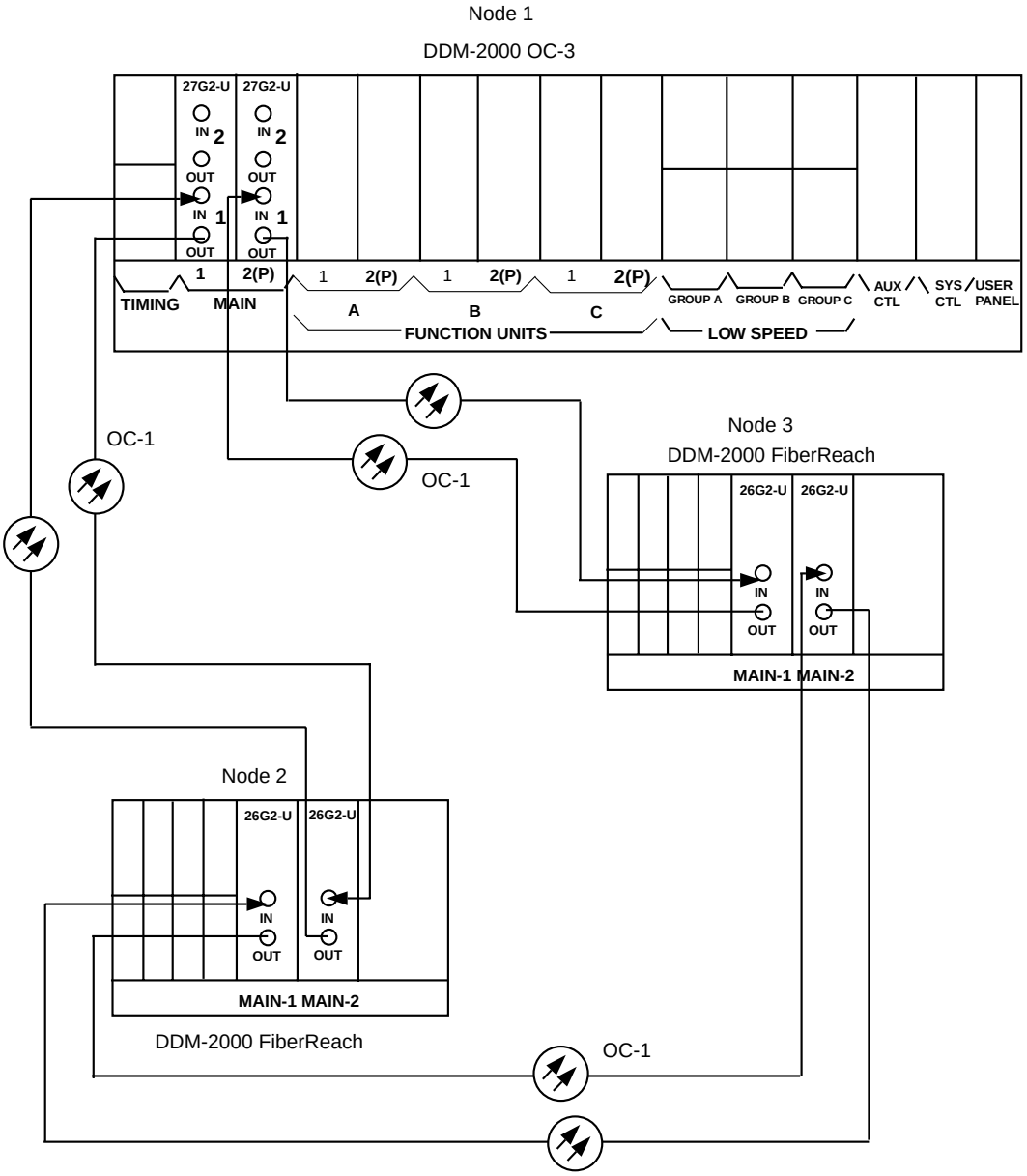

Figure 1. Sample Network Schematic

```
/* Neighbor Map for Site6NE1
====================================================================
TID                           Product Type            Level 2 IS
NSAP
====================================================================
Site6NE1                      FiberReach
 39 840F 80 000000 0000 0000 0000 08006alad06e 00
R5
 39 840F 80 000000 0000 0000 0000 00000e3a0273 00
R6
 39 840F 80 000000 0000 0000 0000 00000e3a0273 00
R7
 39 840F 80 000000 0000 0000 0000 00000e3a0273 00
Site3NE1                                                     Y
 39 840F 80 000000 0000 0000 0000 00000e3a0372 00
Site7NE1
 39 840F 80 000000 0000 0000 0000 08006alad06f 00

*/
```

Figure 2. Sample Report From `rtrv-map-network` Command

```
/* Network Map for Site6NE1
===================================================================
TID                  Connected Thru    Product Type    Level 2 IS
NSAP
===================================================================
Site6NE1                               FiberReach
 39 840F 80 000000 0000 0000 0000 08006alad06e 00
Site7NE1               main-1
 39 840F 80 000000 0000 0000 0000 08006a1ad06f 00
Site5NE1               main-2
 39 840F 80 000000 0000 0000 0000 00000e3a0372 00
*/
```

Figure 3. Sample Report From `rtrv-map-neighbor` Command (Release 3.0)

```
/* Network Map for Site6NE1
=========================================================================
TID                  Connected Thru    Product Type    Level 2 IS  DCC
NSAP
=========================================================================
Site6NE1                               FiberReach
 39 840F 80 000000 0000 0000 0000 08006alad06e 00
Site7NE1               main-1
 39 840F 80 000000 0000 0000 0000 08006a1ad06f 00
Site5NE1               main-2                          ?           N
 39 840F 80 000000 0000 0000 0000 00000e3a0372 00
*/
```

Figure 4. Sample Report From `rtrv-map-neighbor` Command (Release 3.1 and Later)

2. Verify system configuration is same as specified on work order or circuit order.

3. From work order or circuit order, determine the terminating (drop) nodes for the service being established.

4. **NOTE:**
   Cross-connections consist of drop and pass-through connections. For example, in Figure 5, drop connections are made at Nodes 1 and 2. Pass-through cross-connections are made at Node 3. In Figure 6, pass-through cross-connections are made at Node 1.

   NOTE:
   If all 28 VT1.5s (DS1s) in the STS-1 are being passed through at the OC-3 host node, then the cross-connection may be provisioned as either a pass-through STS-1 or VT1.5. However, if you anticipate dropping VT1.5s from the OC-3 node in the future, you should provision the OC-3 as VT1.5 cross-connections. Provisioning now as a VT1.5 cross-connect will avoid a hit on traffic if the STS-1 cross-connect has to be converted to 28 VT1.5 cross-connects to drop DS1s at a later time.

   From work order, circuit order, and the sketch made in Step 1, determine the pass-through nodes for the service being established.

5. Use the **`rtrv-eqpt:`** command at each node to verify that each shelf is properly equipped for the service being established.

6. **NOTE:**
   The following commands may be used to delete, enter, and retrieve cross-connections: **`dlt-crs-vt1`**, **`ent-crs-vt1`**, and **`rtrv-crs-vt1`**. See the "Commands and Reports" section of this manual for a description of commands.

   From work order or circuit order, determine the cross-connections to be made at each node associated with the DS1 service being established.

7. Starting at one of the terminating nodes for the DS1 circuit being established, use the **`rtrv-crs-vt1:`** command at each node in the ring to verify that the cross-connections specified on the work order or circuit order may be made. For example, if the DS1 #1 low speed port in the **DS1** circuit pack in slot #1 of LOW SPEED GROUP A (a-1-1) is to be connected to timeslot m-2-1-1 and the **`rtrv-crs-vt1`** command shows that the cross-connection is already established, you should determine from office records if this port is already in-service before continuing with this procedure.

   If cross-connections are already assigned or improperly assigned, refer trouble to the organization responsible for facility design. Improperly assigned cross-connections may have to be deleted using the **`dlt-crs-vt1`** commands.

8. **NOTE:**
   Channel state provisioning provides IS, AUTO, and NMON states for VT channels similar to the port states for DS1 ports. When a cross-connection is made to a point of termination the channel is in the AUTO state and alarming is disabled. The channel must receive a good signal from either ring to cause the channel to transition to IS.

   At all nonterminating nodes in the network, use the **`ent-crs-vt1:`** command to provision pass-through connections. (For example, in Figure 5, node 3, to make the DS1 pass-through cross-connection for channel m-1-1-1, use the **`ent-crs-vt1:m-1-1-1,m-1-1-1:cct=twoway`** command.)

9. At the terminating (drop) nodes of the circuit being established, use the **`ent-crs-vt1:`** command to make the terminating cross-connections. For example, in Figure 5, at Node 1, if DS1 port #1, circuit pack #1 in **FUNCTION UNITS** GROUP **A** is cross-connected to VT1.5 channel #1, VTG #1, STS #1, OC-1 line 2, then the command **`ent-crs-vt1:a-1-1,m-2-1-1:cct=twoway`** would be used to make the cross-connection. At Node 2 in Figure 5, the command **`ent-crs-vt1:m-1-1-1,a-1-1:cct=twoway`** would be used to make the cross-connection.

10. Use the **`rtrv-crs-vt1:`** command to verify that the proper connection has been made. If an improper cross-connection is made, use the **`dlt-crs-vt1:`** command to delete the improper cross-connection and reenter the cross-connection.

11. After all cross-connections are made, use the **`rtrv-alm:`** command to verify no alarms are present.

12. If `ne-acty` `inc. VT AIS`, `inc. STS1 AIS` `inc. VT unequipped`, or `inc. VT unequipped` alarms are present, look for missing or improperly made cross-connections. Use **TAP-118** to locate missing cross-connections, if required.

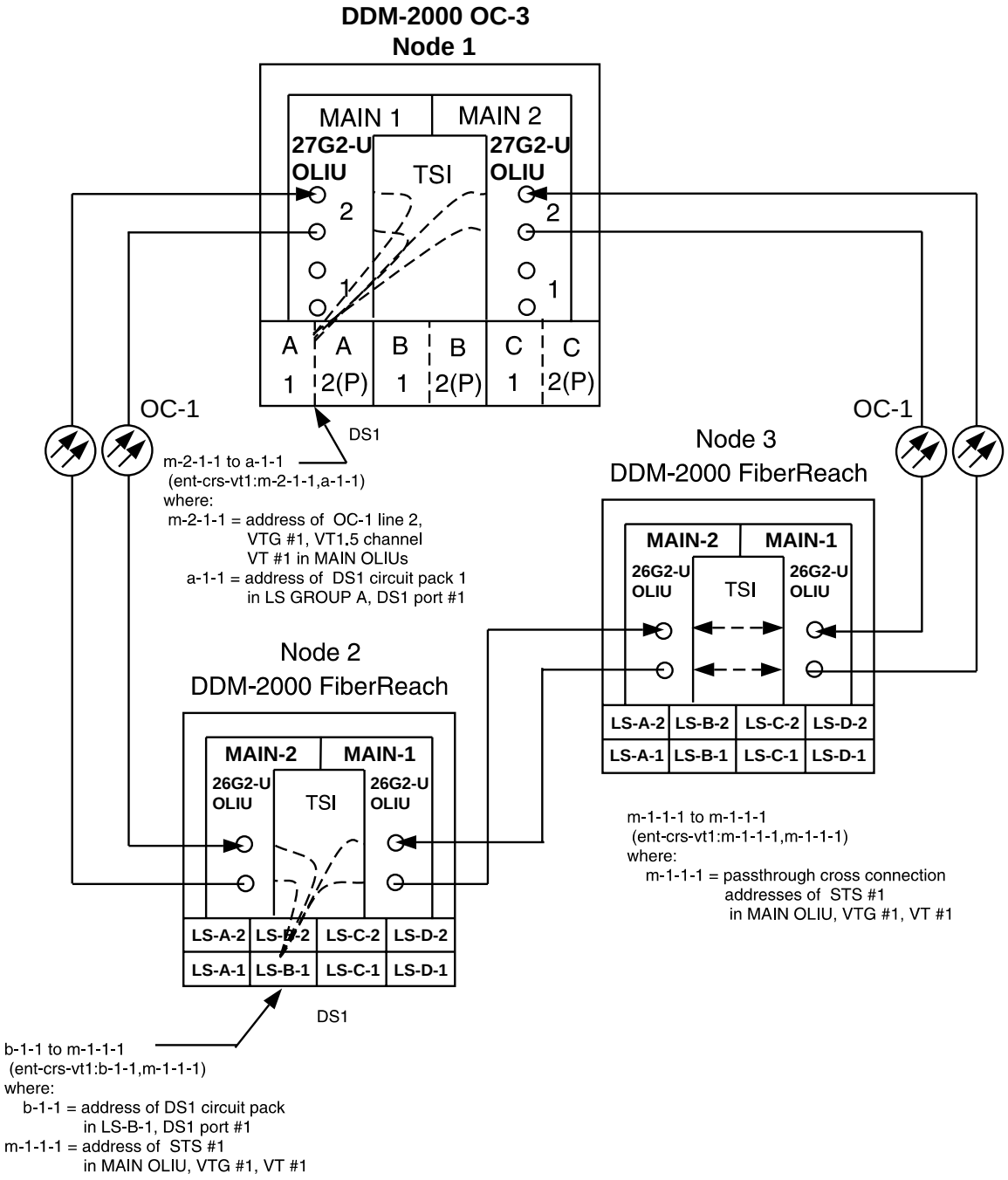

Figure 5. Example 1 of Stand Alone OC-3/OC-1 Cross-Connections

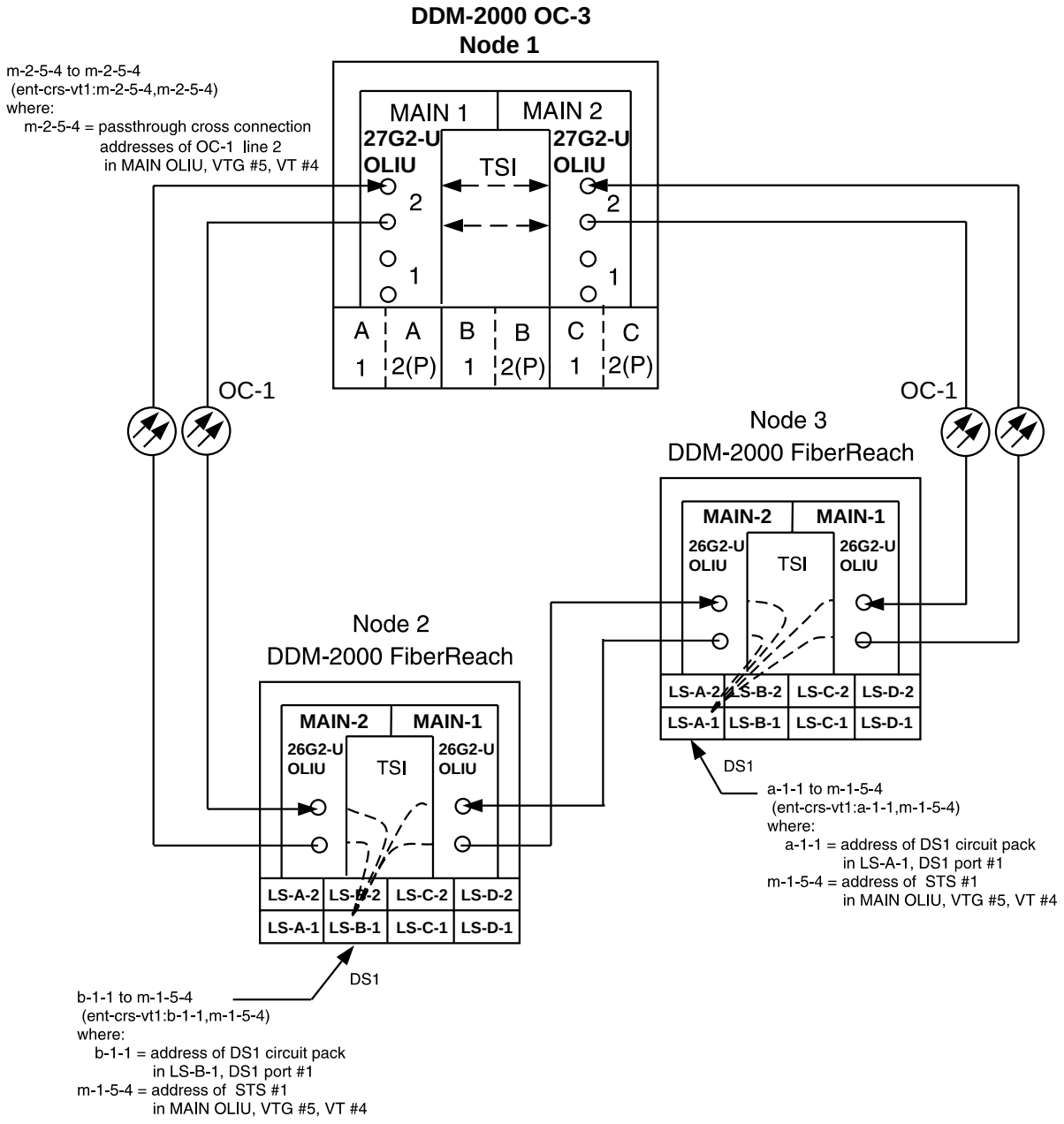

Figure 6. Example 2 of Stand Alone OC-3/OC-1 Cross-Connections

Check 197A BATTERY LOAD TEST SET

1. Obtain **197A BATTERY LOAD TEST SET**. See Figure 1.

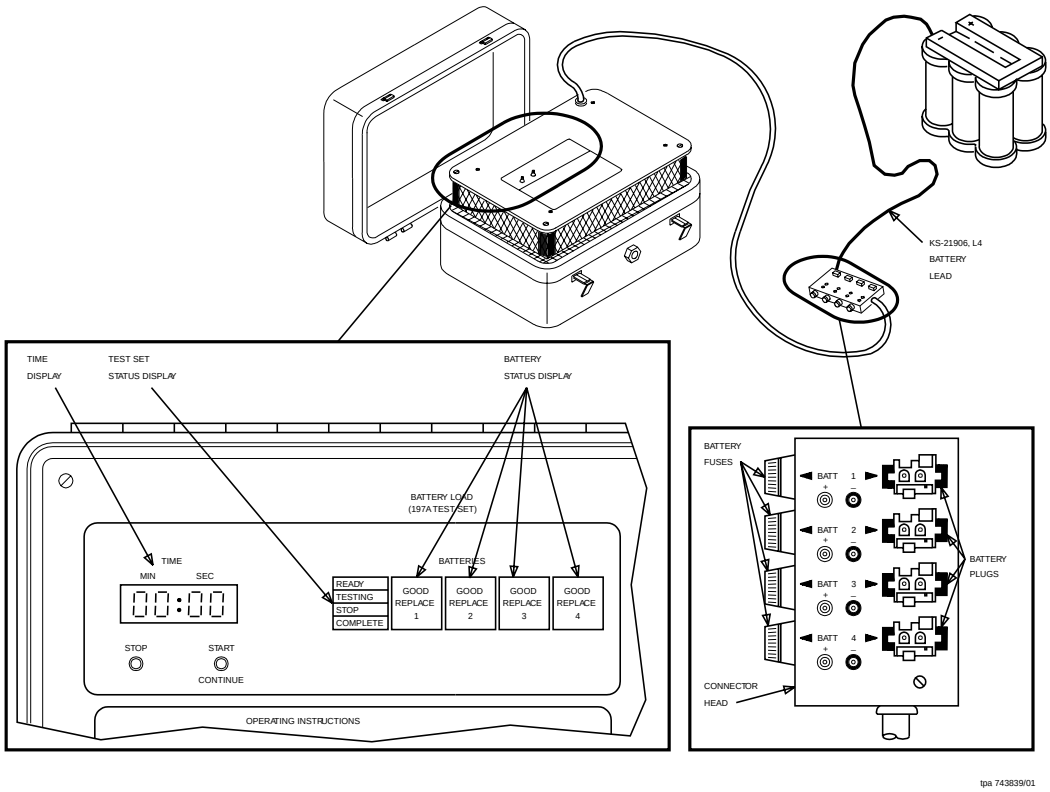

Figure 1. 197A Battery Load Test Set Arrangement

2. Remove cover from test set.

3. At test connector head, verify battery fuse holders each contain a 20 Amp fast-blow fuse.

4. Obtain one KS-21906, L4 battery.

5. **NOTE:**
   Under normal conditions, when the first battery is connected, the following occurs: (a) test set **TIME** display indicates **00 MIN: 00 SEC**; (b) status display indicates which test set **BATT** plug that battery is connected to, status of the battery (**GOOD** or **REPLACE**), and the **READY** indicator lights; (c) test set fan operates.

   At test set connector head, connect battery lead to **BATT 1, 2, 3**, or **4** plug being tested.

6. **WARNING:**
   Damage will occur if test set is operated without fan operating.

   Does test set fan operate?

   If **YES**, proceed to **Step 15.**
   If **NO**, continue with **Step 7.**

7. Connect battery lead to remaining **BATT** plugs, one at a time, and note if fan operates.

8. Did test set fan operate for any **BATT** plug connection?

   If **YES**, proceed to **Step 11.**
   If **NO**, continue with **Step 9.**

9. **NOTE:**
   The test set is intended to test fully charged batteries. Before new batteries or replacement batteries are tested, a minimum of two days must have passed between the time the batteries were put on high rate charge and this test is made.

   Disconnect lead. Using a different battery pack, connect battery lead to any **BATT** plug.

10. Does test set fan operate?

    If **YES**, proceed to **Step 15.**
    If **NO**, proceed to **Step 35.**

11. On test set connector head, remove battery lead and check for blown fuse(s).

12. Is fuse(s) blown?

    If **YES**, continue with **Step 13.**
    If **NO**, proceed to **Step 14.**

13. Replace fuse(s) and repeat from Step 5.

14. **NOTE:**
    Test set may be used for testing using one, two, three, or all four **BATT** plug positions.

    There is a defective test set or connector head. Note defective **BATT** plug position(s). Continue with test procedures using remaining **BATT** plugs.

15. Does test set **TIME** display indicate **00 MIN:00 SEC** without blinking?

    If **YES**, continue with **Step 16.**
    If **NO**, proceed to **Step 35.**

16. Does status display indicate which battery was connected, status (**GOOD** or **REPLACE**) of the battery, and is **READY** indicator lit?

    If **YES**, continue with **Step 17.**
    If **NO**, proceed to **Step 35.**

17. Does status display indicate **GOOD** or **REPLACE**?

    If **YES**, proceed to **Step 19.**
    If **NO**, continue with **Step 18.**

18. **DANGER:**
    A high discharge current is present at connector head if **TESTING** *indicator is lit. Batteries must not be connected or disconnected when* **TESTING** *indicator is lit.*

    Battery pack is defective. Ensure that **TESTING** indicator is not lit (**READY** indicator lit), unplug and set aside defective battery pack, and repeat from Step 5.

19. Have **TIME** display and **STATUS** indicators been tested for each good **BATT** plug position?

    If **YES**, proceed to **Step 21.**
    If **NO**, continue with **Step 20.**

20. ⚠ **DANGER:**
    A high discharge current is present at connector head if **TESTING** *indicator is lit. Batteries must not be connected or disconnected when* **TESTING** *indicator is lit.*

    Ensure that **TESTING** indicator is not lighted. (**READY** indicator lit). Unplug battery pack and repeat from Step 5.

21. ⚠ **DANGER:**
    A high discharge current is present at connector head if **TESTING** *indicator is lit. Batteries must not be connected or disconnected when* **TESTING** *indicator is lit.*

    Depress test set **START/CONTINUE** button.

22. Does test set **TESTING** indicator light, **READY** indicator go off, and **TIME** display start counting time?

    If **YES**, proceed to **Step 24.**
    If **NO**, continue with **Step 23.**

23. ⚠ **DANGER:**
    A high discharge current is present at connector head if **TESTING** *indicator is lit. Batteries must not be connected or disconnected when* **TESTING** *indicator is lit.*

    There is a defective test set. Depress **STOP** button, unplug battery, and return test set for repair.

24. Depress test set **STOP** button.

25. Does test set **STOP** indicator light and **TIME** display stop counting time?

    If **YES**, proceed to **Step 27.**
    If **NO**, continue with **Step 26.**

26. ⚠ **DANGER:**
    A high discharge current is present at connector head if **TESTING** *indicator is lit. Batteries must not be connected or disconnected when* **TESTING** *indicator is lit.*

    There is a defective test set. Allow test to run for 15 minutes as shown on **TIME** display. When **COMPLETE** indicator lights, unplug battery, and return test set for repair.

27. ⚠ **DANGER:**
    A high discharge current is present at connector head if **TESTING** *indicator is lit. Batteries must not be connected or disconnected when* **TESTING** *indicator is lit.*

    Depress test set **START/CONTINUE** button.

28. Does test set **TESTING** indicator light, **STOP** indicator go off, and **TIME** display start counting time?

    If **YES**, continue with **Step 29.**
    If **NO**, proceed to **Step 35.**

29. Allow test set to run for 15 minutes as shown on **TIME** display.

30. During 15-minute test period, does test set show **REPLACE**?

    If **YES**, continue with **Step 31.**
    If **NO**, proceed to **Step 32.**

31. Note that battery being used is defective.

32. After 15 minutes, does **COMPLETE** indicator light?

    If **YES**, continue with **Step 33.**
    If **NO**, proceed to **Step 35.**

33. Unplug battery. Store connector head in test set cover. Reinstall cover.

34. **STOP. YOU HAVE COMPLETED THIS PROCEDURE.**

35. **DANGER:**
    A high discharge current is present at connector head if **TESTING** *indicator is lit. Batteries must not be connected or disconnected when* **TESTING** *indicator is lit.*

    Defective test set. Depress **STOP** button, unplug battery, and return test set for repair.

36. There is a defective test set. Return for repair.

Make Cross-Connections Using CIT Single Homing/Linear Extensions or Dual Homing OC-48/OC-3/12 and OC-192/OC-3/12 Ring Configuration

1. **NOTE:**
   If you are not familiar with doing cross-connections using the CIT commands, it is **strongly** suggested that you read *Cross-Connection Provisioning* in the "Administration and Provisioning" section of this manual and the appropriate documentation in the FT-2000 or WaveStar User/Service Manual. Also, read the description of the following commands in the "Commands and Reports" section of this manual and the DDM-2000 FiberReach manual: **`ent-crs-sts1`**, **`ent-crs-vt1`** , **`rtrv-crs-sts1`**, **`rtrv-crs-vt1`**, **`dlt-crs-sts1`**, and **`dlt-crs-vt1`**.

   NOTE:
   You will have to login to more than one node in each ring to get a complete map of the network using the **`rtrv-map-network`** and **`rtrv-map-neighbor`** command. If a drawing of the network is not provided with the work order, it is recommended that you draw a simple schematic of the network before making cross-connections.

   Make a simple drawing of the network and list the TID of each node and how they are connected to each other. Figures 1 and 8 show examples of simple schematics.

2. Log into any node in each ring in the network and use the **`rtrv-map-network`** and/or **`rtrv-map-neighbor`** command to retrieve a map of the network which lists all the systems and how they are connected to each other.

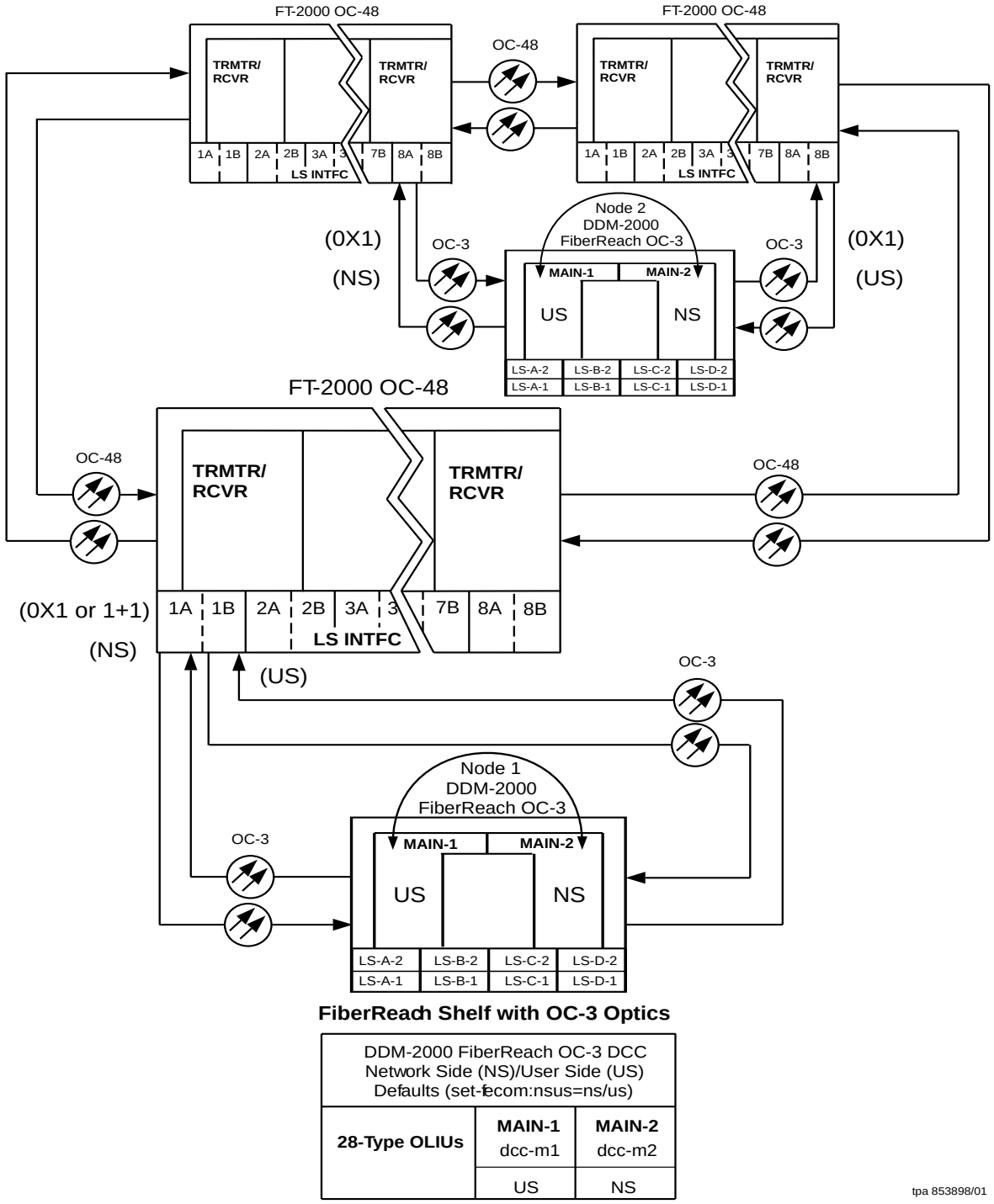

Figure 1. Sample FT-2000 OC-48/OC-3 Single Homed or Linear Extension Network Schematic

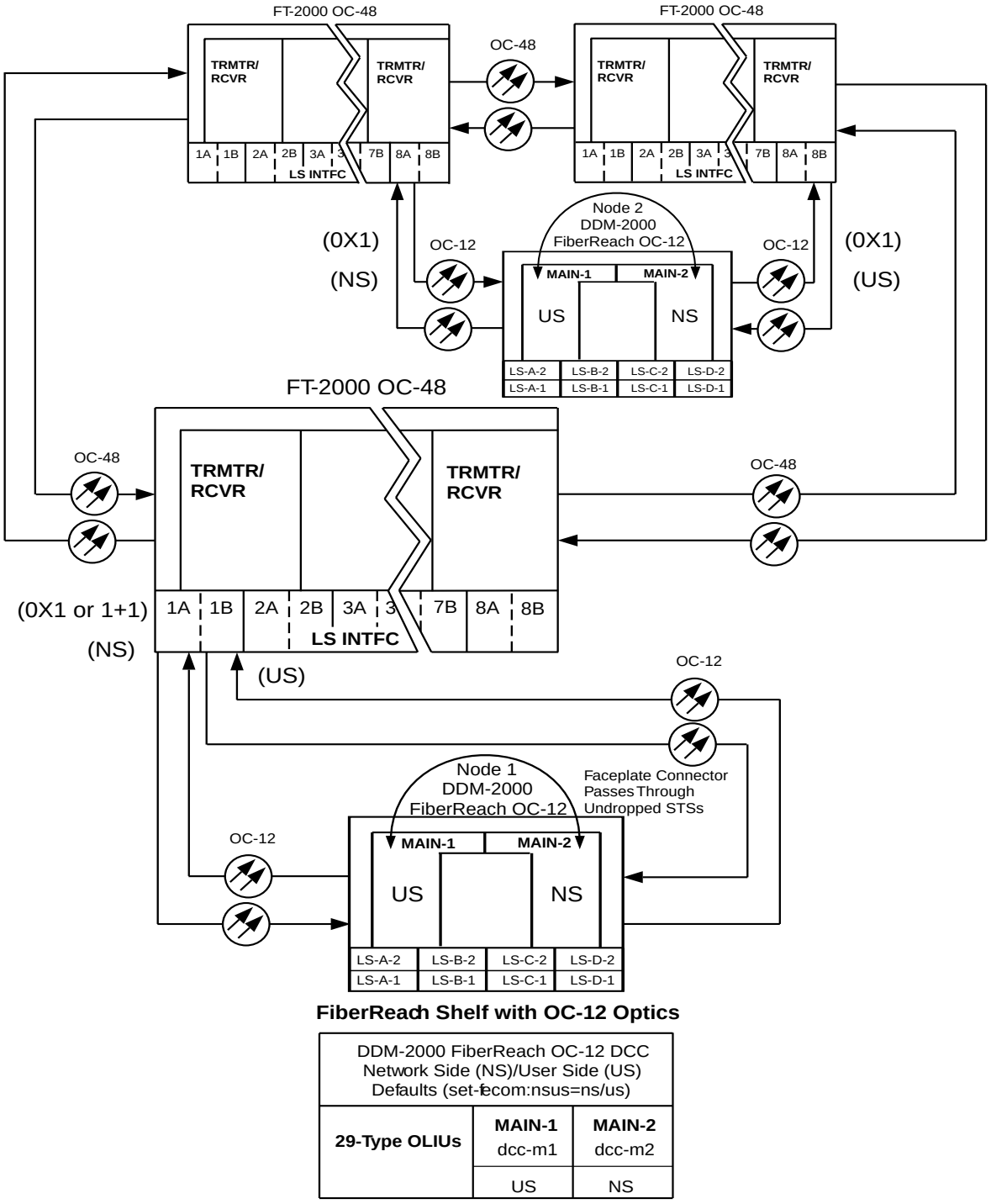

FiberReach Shelf with OC-12 Optics

DDM-2000 FiberReach OC-12 DCC Network Side (NS)/User Side (US) Defaults (set-fecom:nsus=ns/us)		
29-Type OLIUs	**MAIN-1** dcc-m1	**MAIN-2** dcc-m2
	US	NS

Figure 2. Sample FT-2000 OC-48/OC-12 Single Homed or Linear Extension Network Schematic

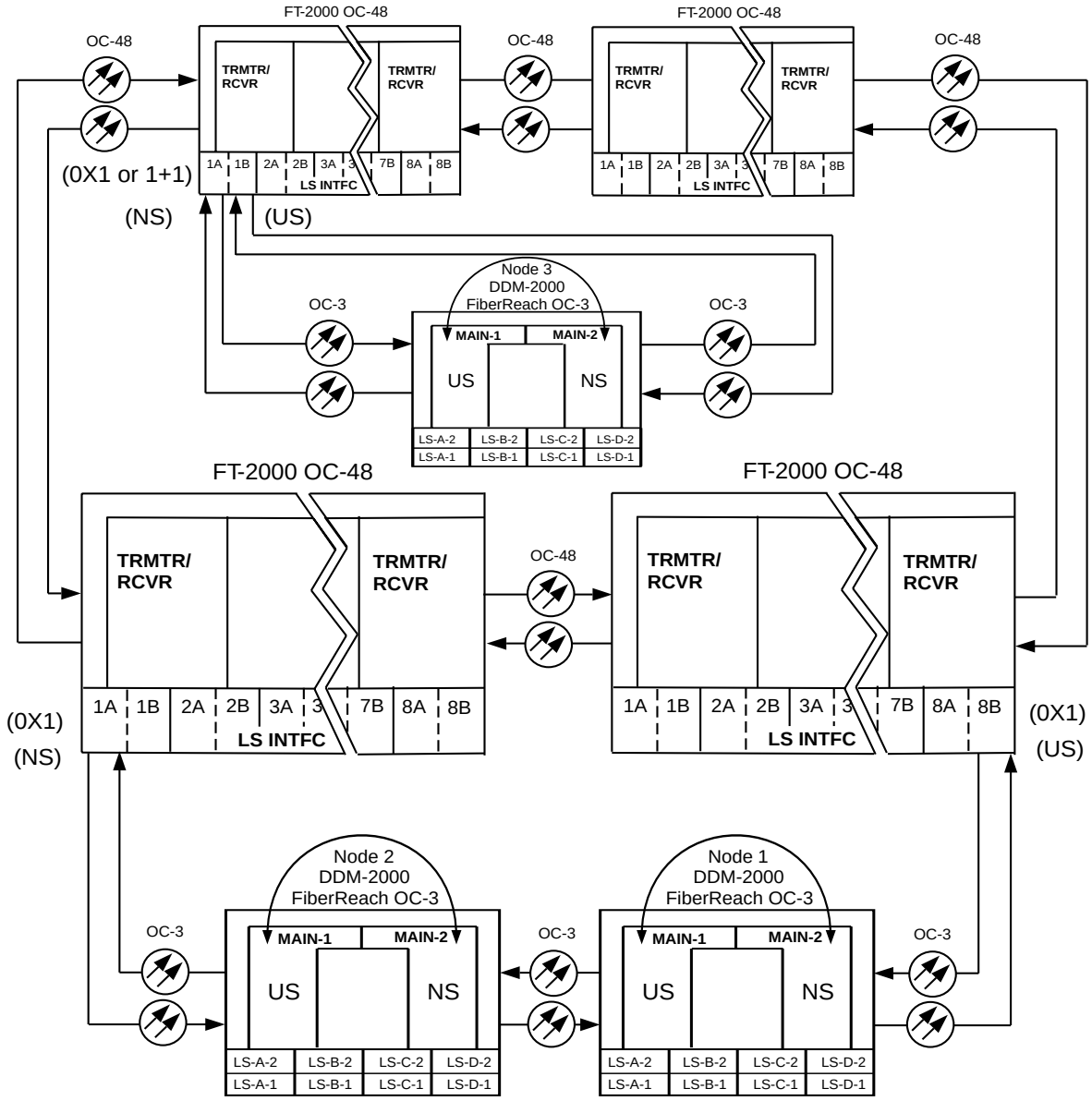

FiberReach Shelf with OC-3 Optics

DDM-2000 FiberReach OC-3 DCC Network Side (NS)/User Side (US) Defaults (set-fecom:nsus=ns/us)		
28-Type OLIUs	**MAIN-1** dcc-m1	**MAIN-2** dcc-m2
	US	NS

Figure 3. Sample FT-2000 OC-48/OC-3 Dual Homed Network Schematic

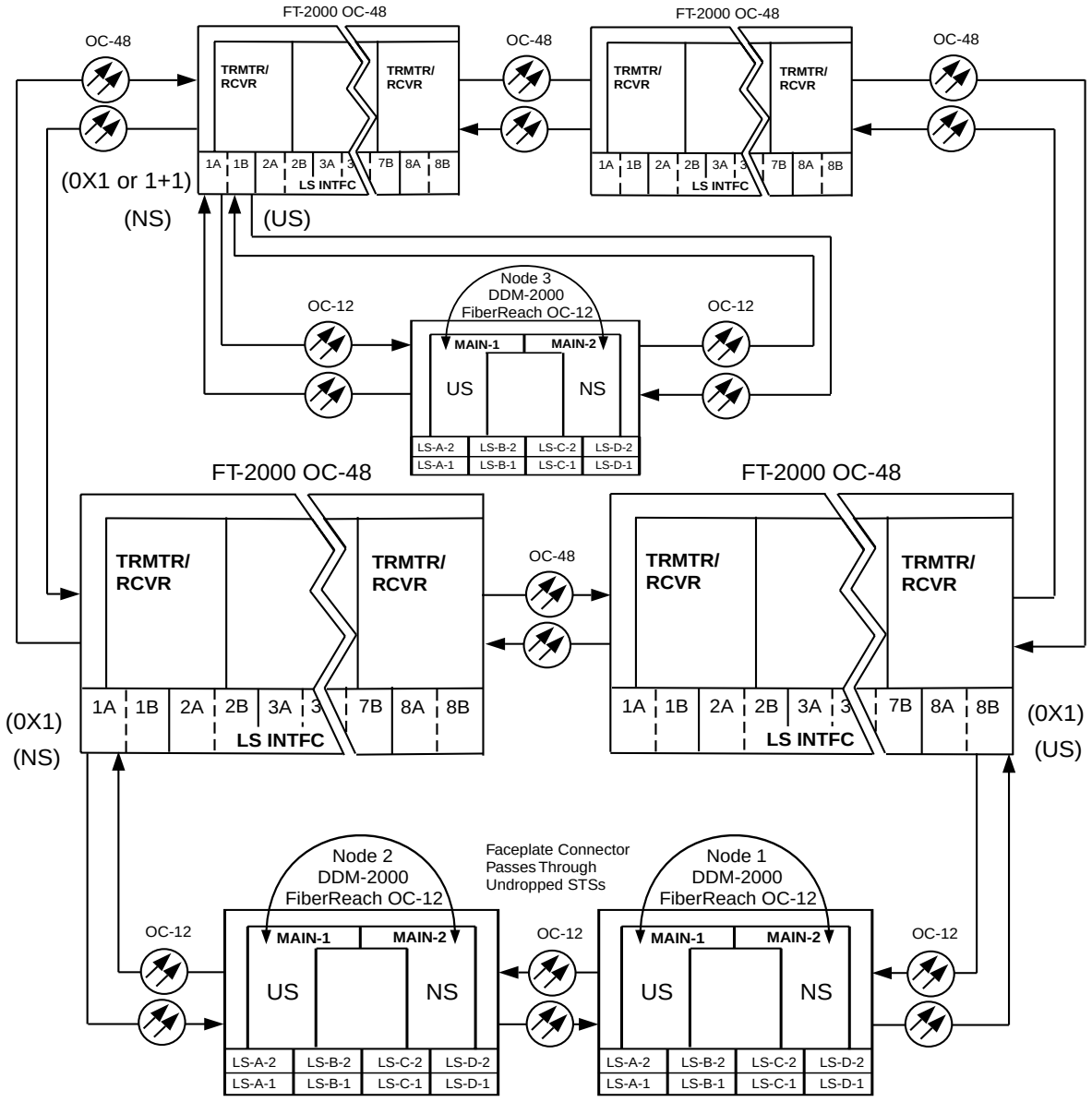

FiberReach Shelf with OC-12 Optics

DDM-2000 FiberReach OC-12 DCC Network Side (NS)/User Side (US) Defaults (set-fecom:nsus=ns/us)		
29-Type OLIUs	**MAIN-1** dcc-m1	**MAIN-2** dcc-m2
	US	NS

Figure 4. Sample FT-2000 OC-48/OC-12 Dual Homed Network Schematic

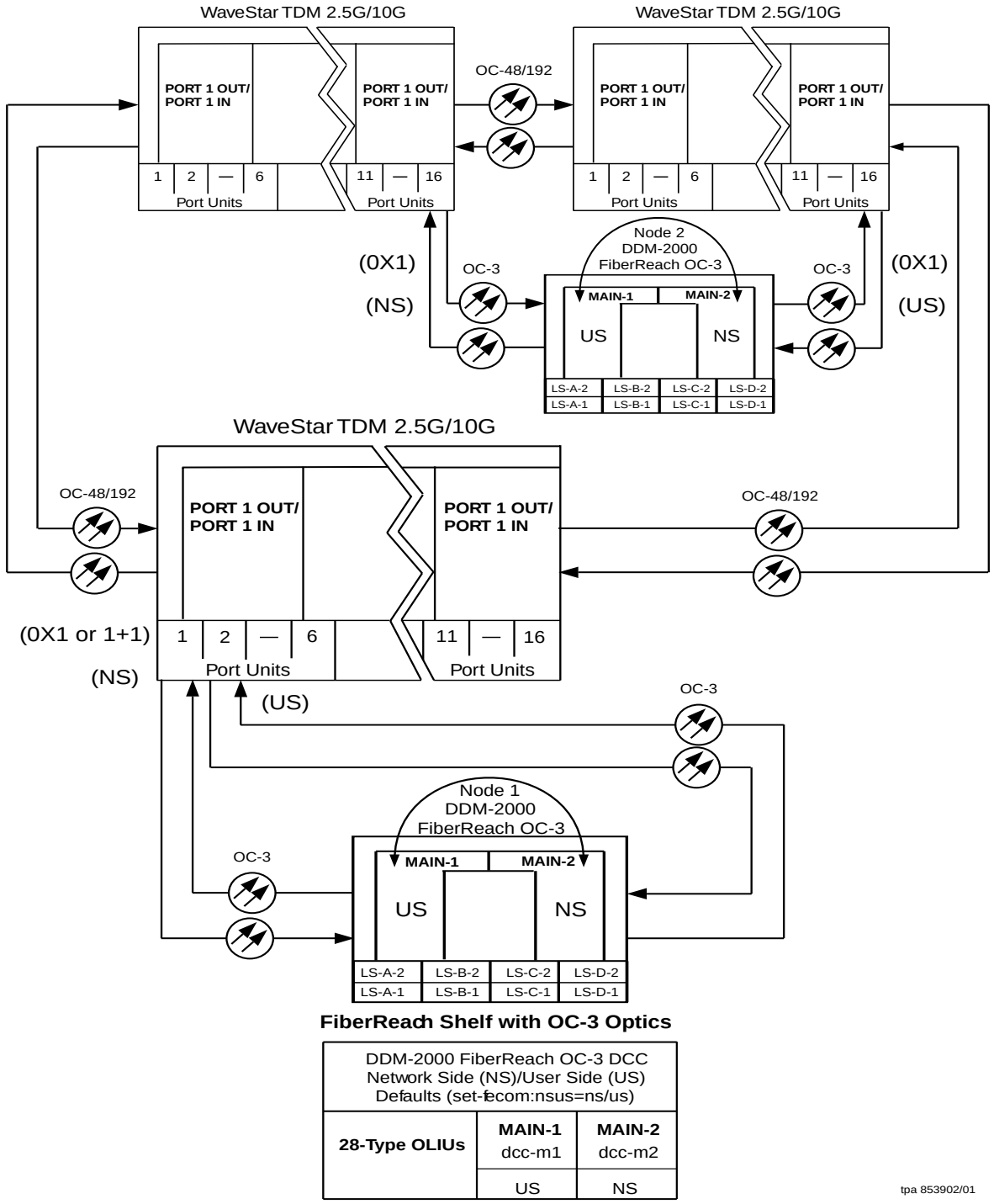

FiberReach Shelf with OC-3 Optics

DDM-2000 FiberReach OC-3 DCC Network Side (NS)/User Side (US) Defaults (set-fecom:nsus=ns/us)		
28-Type OLIUs	**MAIN-1** dcc-m1	**MAIN-2** dcc-m2
	US	NS

Figure 5. Sample WaveStar OC-48/192/OC-3 Single Homed or Linear Extension Network Schematic

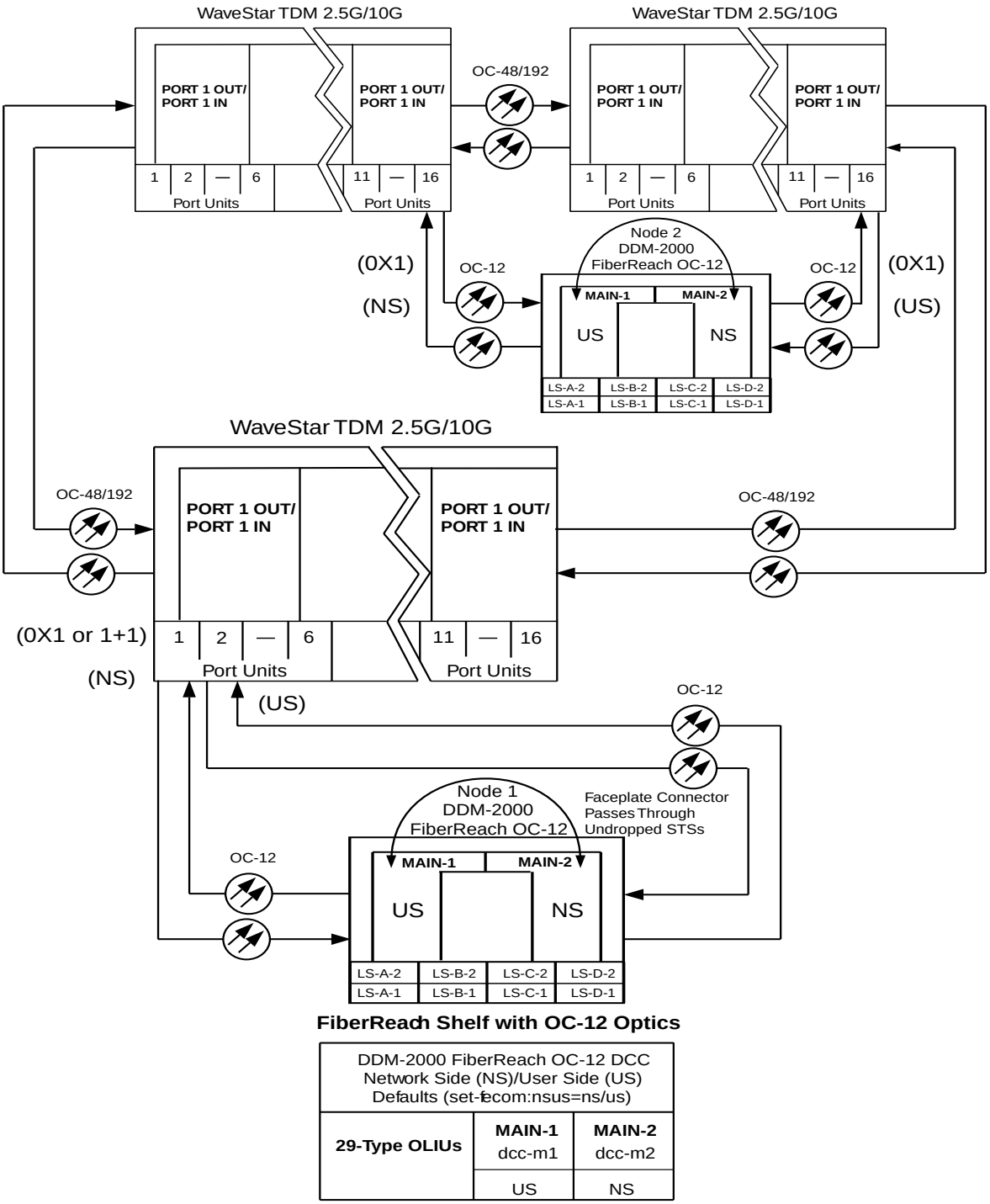

FiberReach Shelf with OC-12 Optics

DDM-2000 FiberReach OC-12 DCC Network Side (NS)/User Side (US) Defaults (set-fecom:nsus=ns/us)		
29-Type OLIUs	**MAIN-1** dcc-m1	**MAIN-2** dcc-m2
	US	NS

Figure 6. Sample WaveStar OC-48/192/OC-12 Single Homed or Linear Extension Network Schematic

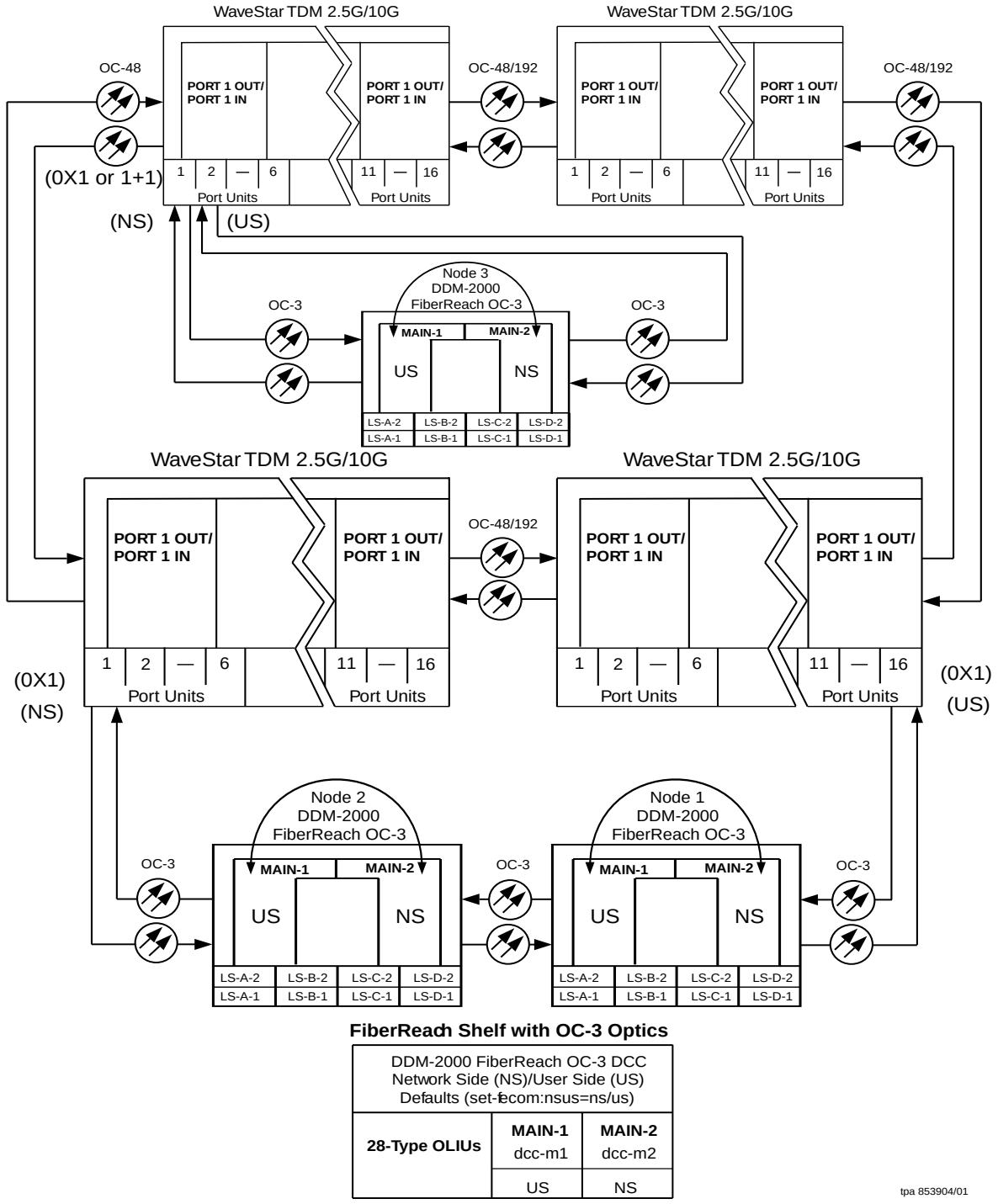

FiberReach Shelf with OC-3 Optics

DDM-2000 FiberReach OC-3 DCC Network Side (NS)/User Side (US) Defaults (set-fecom:nsus=ns/us)		
28-Type OLIUs	**MAIN-1** dcc-m1	**MAIN-2** dcc-m2
	US	NS

Figure 7. Sample WaveStar OC-48/192/OC-3 Dual Homed Network Schematic

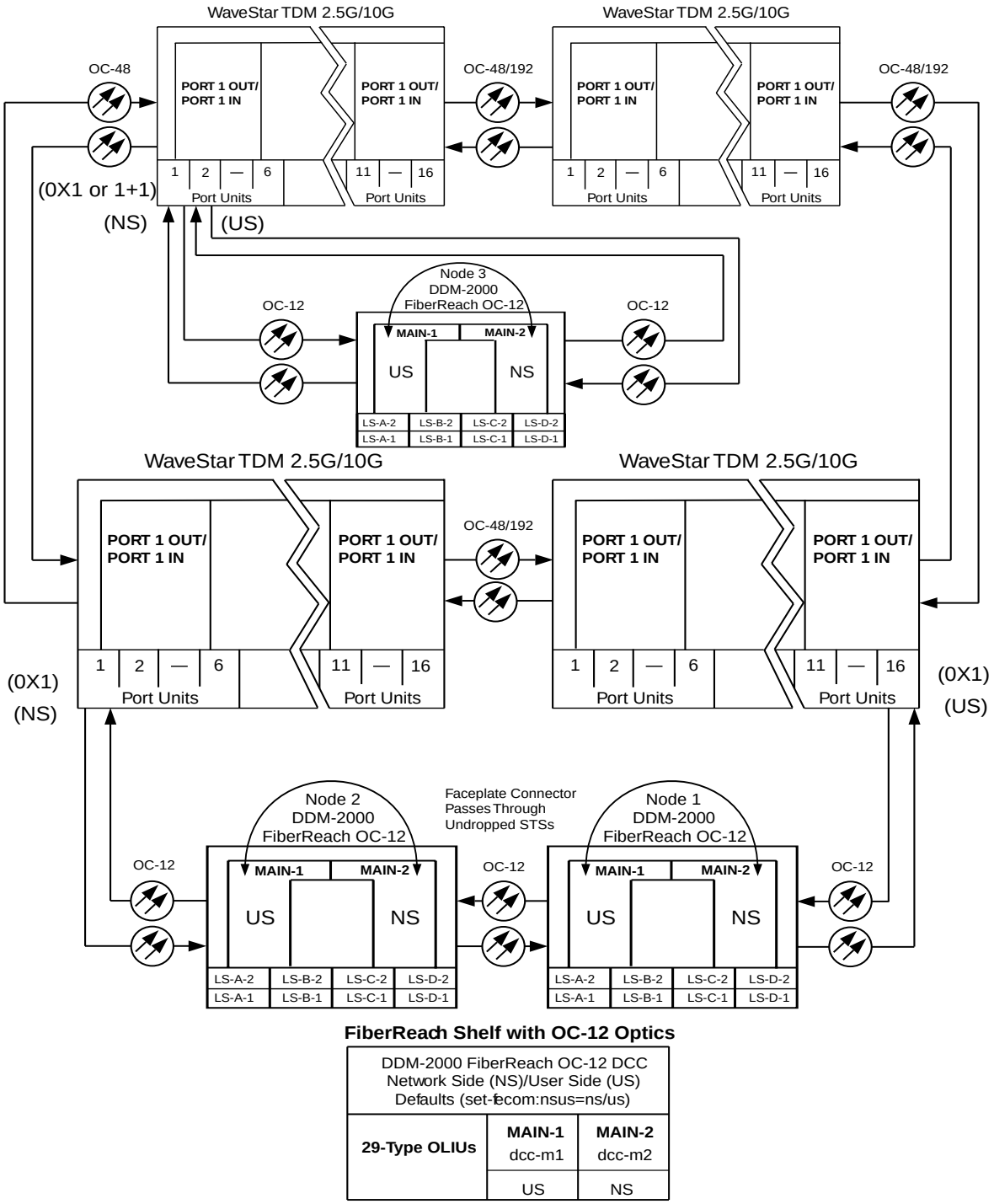

FiberReach Shelf with OC-12 Optics

DDM-2000 FiberReach OC-12 DCC Network Side (NS)/User Side (US) Defaults (set-fecom:nsus=ns/us)		
29-Type OLIUs	**MAIN-1** dcc-m1	**MAIN-2** dcc-m2
	US	NS

Figure 8. Sample WaveStar OC-48/192/OC-12 Dual Homed Network Schematic

3. Verify system configuration is same as specified on work order or circuit order.

4. **NOTE:**
   Cross-connections consist of drop and pass-through connections. For example in Figures 9 and 10, drop connections are made at OC-3 Nodes 1 and 3. Pass-through cross-connections are made at Node 2 in the network. Also, cross-connections must be made in all interconnected rings, including other DDM-2000 OC-3 rings, DDM-2000 OC-12 rings, FT-2000 OC-48 rings, and WaveStar TDM OC-48/OC-192 rings as required. See **`ent-crs-( )`** command in the Commands and Reports section of Volume 1 of this manual.

   From work order or circuit order, determine the terminating (drop) nodes for the service being established.

5. From work order, circuit order, and the sketch made in Step 1, determine the pass-through nodes for the service being established.

6. From work order or circuit order, determine the host OC-48/192 node(s) that connects to the OC-3 ring(s) or extensions.

7. Use the **`rtrv-eqpt:`** command at each node in the network to verify that each shelf is properly equipped for the service being established. Ensure that **OLIU**

8. **NOTE:**
   Cross-connections supporting DS1 services are VT1.5 cross-connections in DDM-2000 OC-3 or FiberReach. Only STS-1 cross-connections are allowed in FT-2000 OC-48 and WaveStar TDM OC-48/192. If STS-1 cross-connections are made at an OC-3 or FiberReach shelf, there is a fixed mapping of all 28 VT1.5 cross-connections to the function unit slot [see **`ent-crs-sts1`** command]

   NOTE:
   The following commands may be used to delete, enter, and retrieve cross-connections: **`dlt-crs-vt1`**, **`dlt-crs-sts1`**, **`ent-crs-vt1`** , **`ent-crs-sts1`**, **`rtrv-crs-vt1`**, and **`rtrv-crs-sts1`**. See the "Commands and Reports" section of each system manual for a description of commands

NOTE:
In ring configurations, you should use the following rules in establishing cross-connections in each ring:

1. All terminating drop connections (including DRI, if present) from the same STS-1 timeslot must be provisioned the same, either all VT1.5 or STS-1.
2. If all 28 VT1.5s (DS1s) in an STS-1 are being passed through at a node in a VT1.5 path-switched ring, then the cross-connection may be provisioned as either a pass-through STS-1 or VT1.5.
3. On STS-1 path-switched rings, all nodes in the ring must be provisioned as STS-1 cross-connections.

From work order or circuit order, determine the cross-connections [STS-1 or VT1.5] to be made at each node [pass-through, terminating (drop), and host OC-48 node(s)] associated with the kind of service being established.

9. Starting at one of the terminating nodes for the DS1/STS-1 circuit being established, use the **`rtrv-crs-( ):`** command at each node in the ring to verify that the cross-connections specified on the work order or circuit order may be made. For example, if the DS1 #1 low speed port in the DS1 circuit pack in slot #2 of Low Speed Group B (**LS-B-2**) is to be connected to timeslot m-1-2-1 and the **`rtrv-crs-vt1`** command shows that the cross-connection is already established, you should determine from office records if this port is already in-service before continuing with this procedure.

   If cross-connections are already assigned or improperly assigned, refer trouble to the organization responsible for facility design. Improperly assigned cross-connections may have to be deleted using the **`dlt-crs-( )`** commands.

10. **NOTE:**
    Channel state provisioning provides IS, AUTO, and NMON states for VT/STS1 channels similar to the port states for DS1 ports. When a cross-connection is made to a point of termination the channel is in the AUTO state and alarming is disabled. The channel must receive a good signal from either ring to cause the channel to transition to in-service (IS).

    At all nonterminating pass-through nodes in the network, use the **`ent-crs-vt1:`** or **`ent-crs-sts1:`**) command to provision pass-through connections. [For example, to make the DS1 pass-through cross-connection for channel m-1-2-1 in other OC-3 or FiberReach shelves, use the **`ent-crs-vt1:m-1-2-1,m-1-2-1:cct=twoway`** command.]

11. At both terminating (drop) nodes of the circuit being established, use the **`ent-crs-( ):`** command to make the terminating cross-connections at OC-3 nodes (for example at the OC-3 Node 3 in Figures 9 and 10, **`ent-crs-vt1:m-1-2-1,b-2-1:cct=twoway`**).

12. At the host FT-2000 or WaveStar OC-48/192 ring node sites, make proper cross-connections.

13. Use the **`rtrv-crs-vt1:`** or **`rtrv-crs-sts1:`** command to verify that the proper connections have been made. If an improper cross-connection is made, use the **`dlt-crs-vt1:`** or **`dlt-crs-sts1:`** command to delete the improper cross-connection and reenter the cross-connection.

14. At DDM-2000 OC-3 or FiberReach terminating nodes equipped with **BBG4B DS3** circuit packs, use the **`set-trace-sts1`** command to verify the proper cross-connect path of a STS-1 cross-connected STS-1 signal.

15. After all cross-connections are made, use the **`rtrv-alm:`** command to verify no alarms are present.

16. If DS3 cross-connections have been established and the terminating nodes are equipped with **BBG4 DS3** circuit packs, use **`set-trace-sts1`** command to check integrity of cross-connect path.

    Reference: DLP-544

17. If `ne-acty`, `inc. VT AIS`, `inc. STS1 AIS`, `inc. VT unequipped`, or `inc. STS1 unequipped` alarms are present, look for missing or improperly made cross-connections. Use **TAP-118** to locate missing cross-connections, if required.

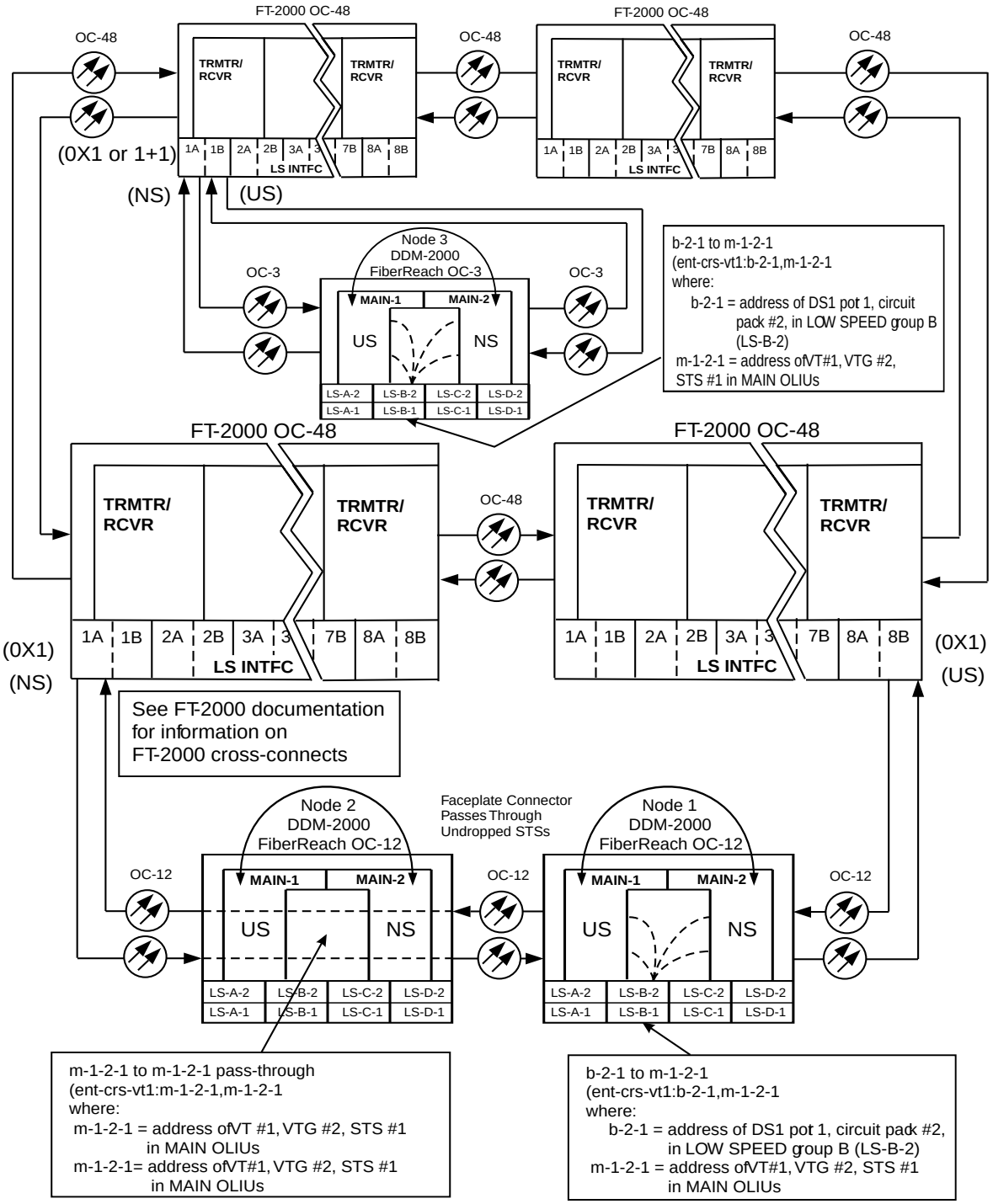

Figure 9. Example of Single Homing or Linear Extension/Dual Homing FT-2000 OC-48 and OC-3/12 Cross-connections

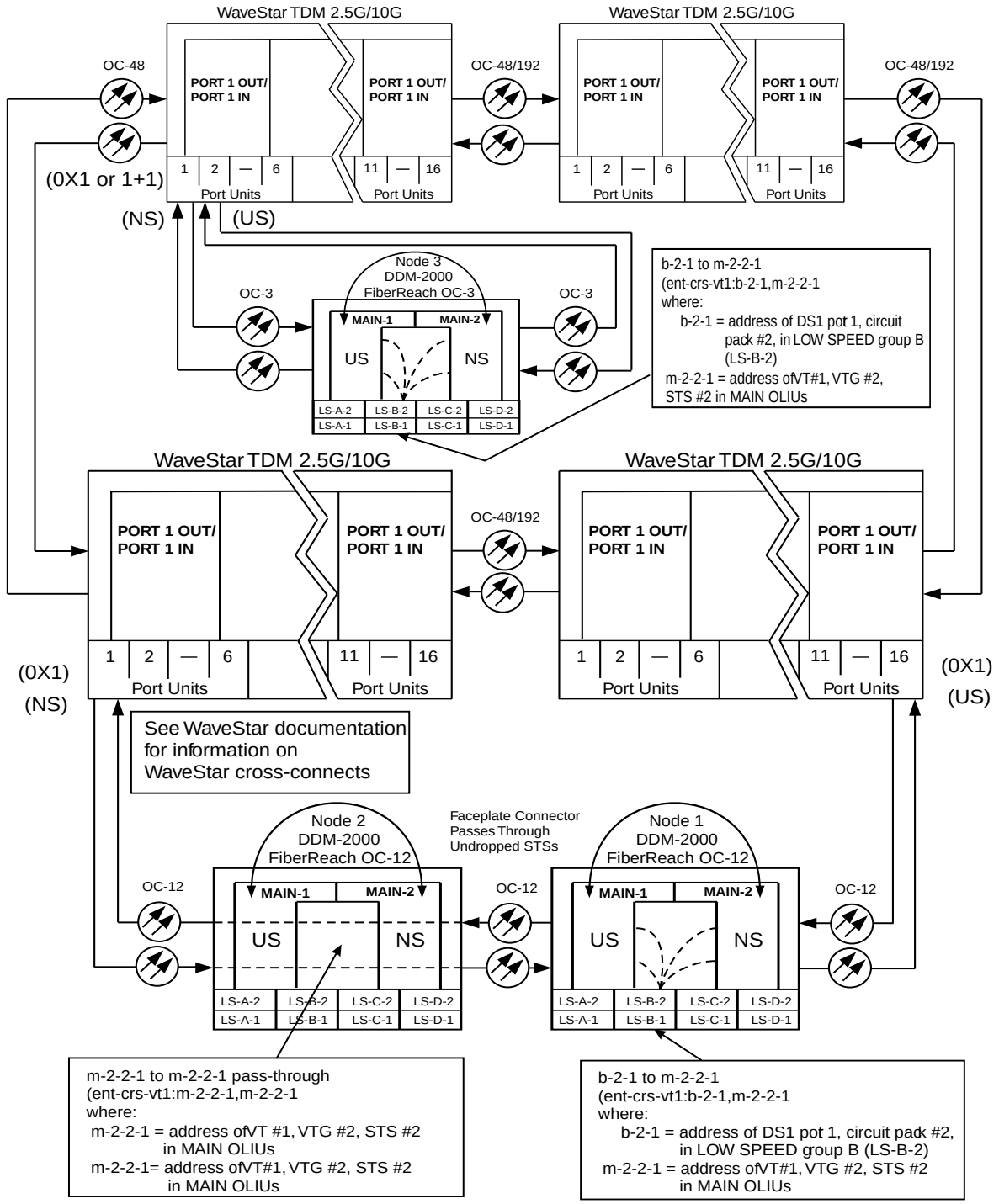

Figure 10. Example of Single Homing or Linear Extension/Dual Homing WaveStar OC-48/192 and OC-3/12 Cross-connections

Retrieve Generic Software Version ID

1. Is a CIT available?

   If **YES**, continue with **Step 2**.
   If **NO**, proceed to **Step 5**.

2. Connect CIT to User Panel and establish session.

   Reference: **DLP-521**

3. Use the **`rtrv-eqpt:sysctl`** command to retrieve generic software version number.

   Response: System outputs an *Equipage and Version Report* which contains the program version presently loaded into the system.

4. **STOP. YOU HAVE COMPLETED THIS PROCEDURE.**

5. **NOTE:**
   When the **ACO** button is depressed, all LEDs and the 7-segment display on the **SYSCTL** light. If the **ACO** button is released within 2 seconds, the LED test completes and the 7-segment display and all LEDs will revert to normal operation. If the **ACO** button is depressed longer than 2 seconds, the 7-segment display goes blank for 2 seconds and then each digit of the generic software version code is scrolled through the display. The LEDs remain lit while the code is being displayed. When the **ACO** button is released, the LEDs remain lit until the full software version code is displayed. If the **ACO** button is still depressed when the software version code has completed cycling, the display goes blank for 2 seconds and starts cycling through the software version code again. This continues as long as the **ACO** button is depressed. When the **ACO** button is released the cycle will complete and the display and all LEDs go to normal operation.

Depress and hold (for longer than 2 seconds) the **ACO** button on the User Panel.

Response: All LEDs and the 7-segment display light. The display goes blank for 2 seconds and then scrolls through the full software version code.

6. **STOP. YOU HAVE COMPLETED THIS PROCEDURE.**

Perform Test of RT Batteries Using 197A BATTERY LOAD TEST SET

1. **CAUTION:**
   Service interruption will occur if batteries are disconnected and AC power is not available.

   Obtain **197A BATTERY LOAD TEST SET (197A)** and place near batteries to be tested (Figure 1).

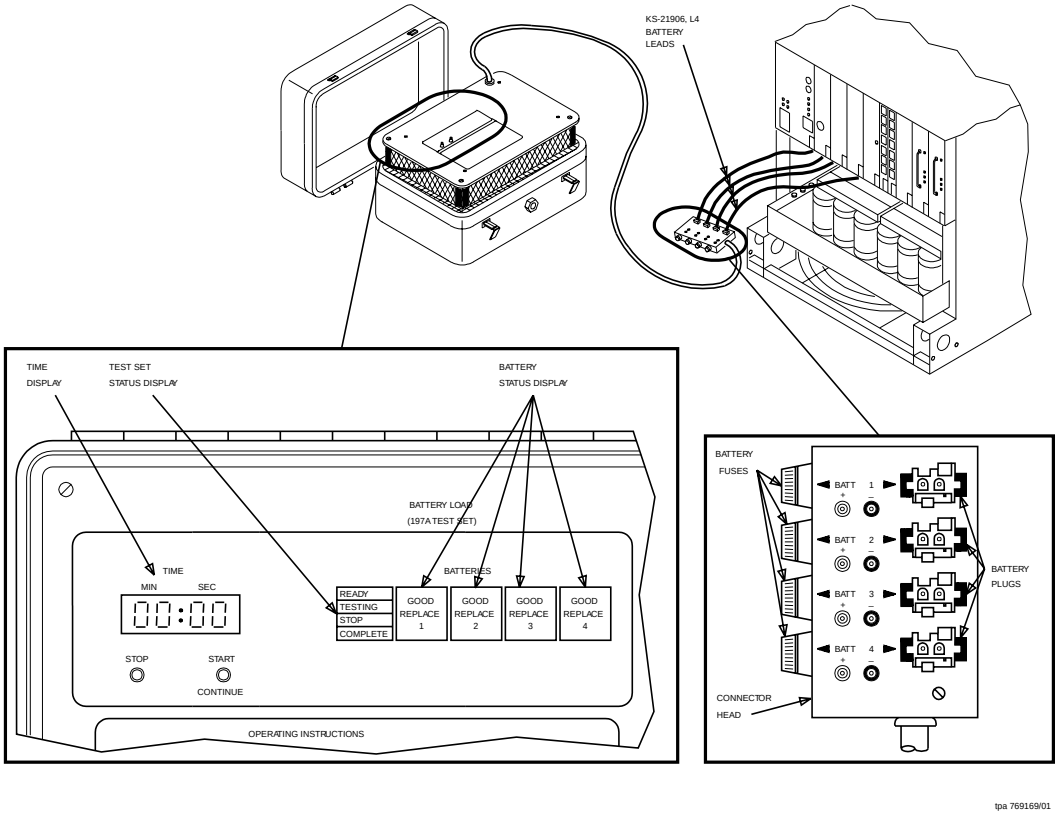

Figure 1. 197A Battery Load Test Set Test Connections

2. **NOTE:**
   The **197A** test set is intended to test batteries that are fully charged. A minimum of two days must be allowed between the time the batteries (new or replacement) are put on high rate charge and this test is made. After testing is completed, the batteries must be put on high rate charge using the **337A BATTERY CHARGER**.

   Remove cover from **197A** test set.

3. Check **197A** test set for proper operation (if not already performed).

   Reference: **DLP-529**

4. Ensure that system(s) associated with batteries to be tested has AC power available (**PMN** or **P/M** indicator on **BCU** circuit pack not lit).

5. On **337A BATTERY CHARGER** associated with batteries to be tested, is **HIGH RATE CHG/ON** indicator lit?

   If **YES**, then continue with **Step 6.**
   If **NO**, then proceed to **Step 7.**

6. Batteries are on high charge and may require up to 24 hours to charge. Do not perform this procedure until **HIGH RATE CHG/ON** indicator on **BATTERY CHARGER** goes off.

7. **CAUTION:**
   Service interruption will occur if batteries are disconnected and AC power is not available.

   Disconnect battery leads of batteries to be tested from battery shelf.

8. **NOTE:**
   Under normal conditions, when the first battery is connected, the following occurs: (a) The test set **TIME** display indicates **00 MIN:00 SEC**; (b) the status display indicates which test set **BATT** plug the battery is connected to, status of the battery (**GOOD** or **REPLACE**), and the **READY** indicator lights; (c) test set fan operates.

   At test set connector head (Figure 1), connect battery leads (up to four) to **BATT 1, 2, 3,** and **4** plugs.

9. **NOTE:**
If status display does not indicate battery number of battery status, **BATT** fuse may be blown, connector head or test set may be defective, or battery pack is defective.

Does test set display indicate **REPLACE** for all batteries being tested?

If **YES**, continue with **Step 10.**
If **NO**, proceed to **Step 12.**

10. Replace all batteries and connect good batteries to battery shelf.

11. Place batteries on high charge by depressing **HIGH RATE CHG/ACTIVATE** pushbutton on **BATTERY CHARGER** and repeat from **Step 6**.

12. **DANGER:**
A high discharge current is present at connector head if **TESTING** *indicator is lit. Batteries must not be connected or disconnected when* **TESTING** *indicator is lit.*

NOTE:
This test must run for a full 15 minutes to be valid or until all batteries indicate **REPLACE**. The **STOP** button should only be used if a problem occurs during the test, if the test is to be terminated early because of loss of AC power, or all batteries indicate **REPLACE**. The **START/CONTINUE** button is used to continue the test if no problem is found.

Depress **197A** test set **START/CONTINUE** button.

Response: At **197A** test set, **TESTING** indicator is lighted, **READY** indicator is off, and **TIME** display is counting time.

13. **NOTE:**
If one, two, or three, but not all, batteries show **REPLACE** during the test period, the remaining batteries still must be tested for the full 15 minutes.

Does test set show **REPLACE** for all batteries within the 15-minute test period shown on **TIME** display?

If **YES**, continue with **Step 14.**
If **NO**, proceed to **Step 15.**

14. ⚠ **DANGER:**
    A high discharge current is present at connector head if **TESTING** *indicator is lit. Batteries must not be connected or disconnected when* **TESTING** *indicator is lit.*

    Depress test set **STOP** button. Proceed to **Step 17.**

    Response: **STOP** indicator on test set lights

15. After 15 minutes, the test set **COMPLETE** indicator lights.

16. Is any **REPLACE** indicator on test set lit?

    If **YES**, continue with **Step 17.**
    If **NO**, **STOP. YOU HAVE COMPLETED THIS PROCEDURE.**

17. Unplug and set aside all defective batteries.

18. Install and connect replacement batteries to battery shelf. Reconnect any remaining good batteries to battery shelf.

19. Place batteries on high charge by depressing **HIGH RATE CHG ACTIVATE** pushbutton on **BATTERY CHARGER** and repeat from **Step 6**.

Introduction to the PC

General

This DLP provides a brief introduction to the PC. It includes proper handling and storage of diskettes and some of the important procedures you should follow when working with your PC. This DLP is a brief review of PC concepts. Refer to your PC user's guide for a complete description.

Anatomy of a PC

PCs vary in physical appearance and size, most *IBM* *compatible PCs consist of three basic parts — a main unit, a monitor, and a keyboard. Note that some PCs, particularly portables, integrate the keyboard, monitor, and main unit into a briefcase-size package. The DDM-2000 FiberReach generic program may be installed with either a desktop PC or a portable PC. The diskettes may be either 3½-inch floppy disks or 5¼-inch floppy disks.

Main Unit

The main unit of the PC contains the CPU (central processing unit), disk drive(s), and memory, among other things. All main units have some common features which include:

- ON/OFF Switch — This switch is used to switch the PC **ON** or **OFF**. It is usually located on the back of the PC, near where the AC power cord plugs in to the PC.
- Serial Port — This is the port which the PC uses to communicate with the customer equipment. When using the PC to install a new generic program to a DDM-2000 FiberReach shelf, the COM1 port must be used. Refer to your PC documentation to determine which port is the COM1 port. There are two types of serial port connectors:
  - 25-pin RS-232 connector (male)
  - 9-pin connector (male).

* Registered Trademark of International Business Machines Corporation

If your PC has the 9-pin connector, you will need a serial port adapter which converts the 9-pin connector to a 25-pin connector. This is a cable which has a 9-pin connector on one end and a 25-pin male connector on the other end.

- Parallel Port — This port is used to connect to some printers.
- Disk Drives — PCs come in several basic types, some of which are as follows:
  - — Single floppy disk, no hard disk — This type PC is the most basic configuration. The PC has a single floppy disk drive, with no hard (fixed) disk. The floppy drive is referred to as drive **A**.
  - — Dual floppy disk, no hard disk — This type PC is identified by the two floppy disk drives installed. One floppy drive is referred to as drive **A**. The second is referred to as drive **B**.
  - — Single floppy disk with hard disk — This type PC has a single floppy disk drive and a hard disk, which can typically store 10 or more megabytes of data. The single floppy disk drive is referred to as drive **A**, and the hard disk is usually referred to as drive **C** .

Other combinations of floppy and hard drives are possible but all that is required is a single floppy drive as a minimum. The procedures in this manual for installing a new generic program indicate using drive **A**.

Monitor

The monitor, sometimes called a display screen, may be either monochrome or color.

Keyboard

The keyboard is used to enter commands. This section reviews some of the features of the keyboard and points out some of the special keys.

The keyboard is divided into two different sections:

- *Typewriter section* — This area has the alphanumeric keys that resemble the layout of a typewriter. In particular, you should locate the **ENTER** key (sometimes referred to as **RETURN**). This key is located on the right side of the typewriter section. It usually has the word **ENTER** or **RETURN** printed on the key. When you are asked to select **<ENTER>** or **RETURN**, you should momentarily depress that key, or equivalent.
- *Special Keys* — The keyboard has many special keys which are interpreted differently by various software packages. Locate the **CANCEL** or **DELETE** key. This key may be used to abort a command.

Rebooting the PC

Occasionally, you may have to reboot the PC. There are three ways to accomplish this:

- Power **ON/OFF** switch — If the PC is **OFF**, you should set the **ON/OFF** switch to the **ON** position. If the PC is already **ON**, it is preferable to reset it using one of the following two methods:
    - **RESET** button — Not all PCs have a **RESET** button, but if yours does, it provides an easy way to reset the PC. Alternatively, the following method may work.
    - Hold down the **CTRL**, **ALT**, and **DELETE** keys all at the same time.

If **RESET** or **CTRL**, **ALT**, and **DEL** keys are not effective, turn **OFF** the PC, wait a few seconds, and turn it back **ON**. Rebooting the PC clears all data you had in memory. If the time of day clock is not indicating the current time and date, set the time of day clock.

Diskettes — Care and Handling

Diskettes are sometimes called floppy disks, or floppies for short. Diskettes are similar to cassette tapes — magnetically encoded information is stored on the diskette for later retrieval. By adhering to the following guidelines you will increase the useful life of your diskettes:

DO:

— Keep the diskette in a protective envelope when not in use.

— Keep the diskette in a dry place.

— Keep the diskettes away from magnetic fields or objects (for example, magnetic screwdriver.)

DO NOT:

— Touch any of the exposed surfaces of the diskette itself; handle it by the edge of the jacket. Very tiny scratches, fingerprints, or dust can ruin a diskette.

— Bend a diskette.

— Write on a diskette label with a ballpoint pen or pencil. Use a felt-tipped pen instead. Write the label before applying it to the diskette if possible.

— Erase the diskette label with a pencil eraser. The dust may destroy the diskette. Instead, place a new label over the old one.

Inserting Diskettes

You should ***never*** remove or insert a diskette while the disk drive indicator light is on. (The computer turns the indicator light on to let you know that it is reading or writing from the disk.) Always wait for the indicator light to go off before opening the disk drive door. Failure to do this may result in damaging the diskette or loss of data on the diskette. Insert a diskette into a disk drive as follows:

1. Open the diskette drive door.

2. Gently insert the diskette with the label facing up and the notch on the left, if provided.

3. Slide the diskette in as far as it will go, but do not force it. You may hear a click when the diskette is all the way in.

CAUTION:
Do not attempt to force the diskette into the drive.

If resistance is felt or it does not slide in easily, remove the diskette and insert it again.

4. Close (latch) the disk drive door.

When you are instructed to insert a diskette into a drive, it is implied that you should open the door, slide the diskette in all the way, and close (latch) the door.

Removing Diskettes

Wait for the indicator light on the disk drive to go off. Open the disk drive door. The diskette may pop out for easy removal. (Opening up a disk drive door is similar to ejecting a cassette from a cassette recorder.) After the diskette has been removed, place it into its protective envelope or storage facility.

Copy Diskettes and Make Backups

General

If you are using new generic program diskettes for the first time, there are two things that you should do:

1. Create a working copy.
2. Make backup copies.

Before installing the program, it is a good idea to make backup copies of the working copy. If the working copy is ever lost or damaged, you will have a backup copy and will not have to create a new working copy from the original.

Create a Working Copy

The diskette(s) sent to you contains the new generic program software. However, before you can install this new program, you have to load the *MS-DOS* *operating system software. (If you are not sure how to do this, instructions are given in the "Starting *MS-DOS* Software" section.) The new generic program software requires *MS-DOS* software (Release 2.1 or later).

To load the version of *MS-DOS* software, you can copy the *MS-DOS* onto the first diskette, and then copy the new generic program software to that diskette also. Once you have done that, simply insert that diskette into the drive and reboot the PC. The new diskette(s) that you create will be your working copy of the new generic program. The original diskette(s) that you received should be stored in a clean, dry place.

You will need the following to create a working copy:

- The *MS-DOS* software disk with Release 2.1 or later.
- A blank diskette(s) (this will become the working copy).
- The original diskette(s) containing the new generic program.

---

* Registered Trademark of Microsoft Corporation

There are three steps required to create a working copy:

1. Start *MS-DOS* software.
2. Format a new diskette(s).
3. Copy the original diskette(s) that you received with your package to the working diskette(s).

Starting MS-DOS Software

Starting *MS-DOS* on some PCs may require you to insert your copy of the *MS-DOS* diskette into your floppy drive, close the door, and reboot or turn on the PC. The disk drive indicator light will come on, and the PC may print out diagnostic results on the monitor. PCs which operate in a *Windows 95* environment require you to exit *Windows* by clicking on the **Start** button, then **Shut Down**, then **Restart the computer in** *MS-DOS* **mode**. In *Windows 3.1*, exit windows using the **File** menu to operate your PC in *MS-DOS* mode. When *MS-DOS* software is ready, a prompt (for example, A>) appears on the display screen. This is how *MS-DOS* software lets you know it is ready for you to type a command.

Formatting a New Diskette

You will need a blank diskette(s). It is a good practice to label diskettes so that you can keep track of them. You should prepare a label for the diskette(s) marked as Lucent Tecnologies DDM-2000 FiberReach Release a.b.c - working copy. The a.b.c is the release version that you are copying.

WARNING:
Do not write on diskette label using a ballpoint pen or pencil.

When the prompt **A>** appears, type the following command, and then press **<ENTER>**. (If you make a mistake while entering this command, you can press the **BACKSPACE** key, or equivalent, which will erase one character at a time.)

```
format a:/s <ENTER>
```

You will see a message similar to the following (the exact wording of the message may vary depending on which PC you are using):

```
Insert new diskette for drive A:
 and strike any key when ready
```

Now open the drive door and remove the *MS-DOS* diskette. Place the *MS-DOS* diskette in its envelope, and set it aside for the time being.

Next, insert the blank diskette into the drive and close the door. Depress any key on the keyboard to begin formatting. After you depress a key, a message similar to the following will appear:

```
Formatting...
```

You will see the disk drive indicator light come on. The formatting process takes several minutes. When the formatting is complete, a message appears to tell you that the format is complete. In addition, you will see several lines of messages about total disk space available. Finally, you will be prompted to format another disk with the following message:

```
Format another (Y/N)?
```

If you do not need to format another disk, type **n** and **<ENTER>**. The system will respond with a prompt **A>** display.

Remove the diskette from the disk drive and place it in a protective envelope or storage location. If you have not already done so, label the diskette(s) as Lucent Technologies DDM-2000 FiberReach Release a.b.c - working copy. You are now ready to copy the files from the original diskette(s) to the working copy diskette(s).

Copying Files — General

The process of copying files from one diskette to another varies slightly depending on whether you have one or two floppy disk drives.

If you have a dual floppy PC, *MS-DOS* software refers to one disk drive as drive **A** and the other disk drive as drive **B**. If you have a single floppy PC (one floppy drive, with or without a hard disk), *MS-DOS* software treats the floppy disk drive as both drive **A** and drive **B**. The hard disk is usually referred to as drive **C**.

To do the new generic program installation using floppy diskettes, all the following files must be on a single diskette:

CHECKPGM.EXE	CRTM.EXE	CTRM.INI	CTRM.SCR	GENERIC.0
PCLOAD.EXE	README	TERM.BAT	STAGE_1.0	STAGE_10.0

The remaining files similar to the following can be on the same diskette or on another diskette:

GENERIC.1	GENERIC.2	GENERIC.3	GENERIC.4	GENERIC.5 ...
GENERICO.0	GENERICO.1	GENERICO.2 ...		

To do the new generic program installation using the PC hard disk, all the files listed in the README file must be on the hard disk in the directory from which you will do the installation.

To read the contents of the README file, use the **`more < README`** command. To list the files on the hard disk or floppy diskette, use the **`dir/p`** command.

Copying Files — Hard Disk System

Set up your hard disk so that when you turn on your computer, it starts up using the hard disk instead of the *MS-DOS* system diskette. When prompt **C:>** appears, type the following commands:

```
mkdir ngp <ENTER>
cd ngp <ENTER>
```

Insert the original generic program diskette in drive **A**, and close the door. Type the following command:

```
copy a:*.* <ENTER>
```

This command tells *MS-DOS* software to copy all of the files from the **A** drive to the **C** drive (hard disk). Open the drive door, and remove the original diskette from the drive. Repeat this procedure for all diskettes.

Copying Files — Single Floppy System

If you have a single floppy system (with or without a hard disk), insert the original new generic program diskette into drive **A**, and close the door. Type the following command after the prompt:

```
copy  a:*.*  b: <ENTER>
```

This command tells *MS-DOS* software to copy all of the files from drive **A** to drive **B**. Since there is no drive **B** physically installed, *MS-DOS* software will pretend that there is one. It does this by copying a file from drive **A** (as much as it can fit) into the PC's memory. It then displays the following message:

```
Insert diskette for drive B:
Strike any key when ready...
```

Open the drive door, and remove the original diskette from the drive. Insert the working copy diskette into the drive, and close the door. Depress any key. The *MS-DOS* software now copies the file from the PC memory to the working copy diskette which you inserted into drive **A**. When the copy is complete, it will display the following message:

```
Insert diskette for drive A:
Strike any key when ready...
```

Open the drive door, and remove the working copy diskette from the drive. Insert the original diskette into the drive, and close the door. Depress any key. The *MS-DOS* software now begins where it left off. This process repeats until the entire diskette has been copied. In summary:

- When you are prompted to insert diskette for drive **A**, insert the original diskette into the floppy drive.
- When you are prompted to insert diskette for drive **B**, insert the working copy diskette into the floppy drive.
- Repeat until the prompt **A>** appears on the display screen.

When the process is complete, the prompt **A>** will be displayed on the screen. Repeat this procedure for all original diskettes. Before using the diskette(s) to install the new program, it is a good idea to make backup copies of the working copy. If the working copy is ever lost or damaged, you will have a backup copy and will not have to create a new working copy from the original(s).

Making Backups — Single Floppy System

Insert the *MS-DOS* diskette into drive **A**. Type:

```
diskcopy a:  b: <ENTER>
```

A message similar to the following appears:

```
Insert SOURCE diskette in drive A:
    Strike any key when ready
```

Wait for the disk drive indicator light to go off. Remove the *MS-DOS* disk from drive **A** and insert the working copy diskette (the source) into the drive. Press any key. The disk drive indicator light will come on to indicate that the copying is in progress. The *MS-DOS* software copies as much of the diskette as it can into the PC's memory and then displays the following message:

```
Insert TARGET diskette in drive A:
    Strike any key when ready
```

Remove the working copy (source) diskette, insert the new (target) diskette, and press any key. It is not necessary to preformat the new diskette; the diskcopy command will do this for you. Depending on the amount of memory in your computer, you may be prompted to repeat this several times. When the copy is complete, the following message will appear:

```
Copying complete

Copy another (Y/N)?
```

If you wish to make additional backups, type **y** and follow the same instructions. If you are done, type an **n** and **<ENTER>**. When the prompt **A>** appears, wait for the disk drive indicator light to go OFF and remove floppy. Label the backup floppy with an appropriate label (for example, Lucent Technologies DDM-2000 FiberReach Release a.b.c - working copy backup).

Copying Files — Dual Floppy System

Insert the first original new generic program diskette into drive **A** and close the door. Insert the formatted copy diskette into drive **B** and close the door. Type the following command:

`copy a:*.* b: <ENTER>`

The files from the original diskette will be copied to the working diskette one at a time. When the process is complete, the prompt **A>** will be displayed on the screen. Repeat the procedure for all remaining original diskettes. Label all diskettes.

Making Backups — Dual Floppy System

Insert the *MS-DOS* diskette into drive **A**. Type in the following command:

`diskcopy a: b: <ENTER>`

A message similar to the following is displayed:

```
Insert SOURCE diskette in drive A:
Insert TARGET diskette in drive B:
     Strike any key when ready
```

Wait for the disk drive indicator light to go off. Remove the *MS-DOS* disk from drive **A** and insert the working copy diskette (the source). Insert a new diskette into drive **B** (the target). It is not necessary to preformat the new diskette; the disk copy command will do this for you. Press any key when ready.

The disk drive indicators on both the **A** and **B** drives will light, indicating that the copying is in progress. Do not open a drive door while the disk drive indicator light is on. When copying is complete, a message similar to the following appears:

```
Copying complete

Copy another (Y/N)?
```

If you wish to make additional backups, type **y** and follow the same instructions. If you are done, type **n** and **<ENTER>**. When the prompt **A>** appears, wait for the disk drive indicator light to go OFF and remove both floppies. Label the backup floppy with an appropriate label (for example, Lucent Technologies DDM-2000 FiberReach Release a.b.c - working copy backup).

Make Cross-Connections Using CIT Single Homing/Linear Extensions or Dual Homing OC-12/OC-3 Ring Configuration

1. **NOTE:**
   If you are not familiar with doing cross-connections using the CIT commands, it is **strongly** suggested that you read Cross-Connection Provisioning in the "Administration and Provisioning" section of this manual. Also, read the description of the following commands in the "Commands and Reports" section of this manual and the DDM-2000 OC-3 and OC-12 manual: **`ent-crs-sts1`**, **`ent-crs-vt1`**, **`rtrv-crs-sts1`**, **`rtrv-crs-vt1`**, **`dlt-crs-sts1`**, and **`dlt-crs-vt1`**.

   NOTE:
   You will have to login to more than one node in each ring to get a complete map of the network using the **`rtrv-map-network`** and **`rtrv-map-neighbor`** command. If a drawing of the network is not provided with the work order, it is recommended that you draw a simple schematic of the network before making cross-connections.

   Make a simple drawing of the network and list the TID of each node and how they are connected to each other. Figures 1 through 4 show examples of simple schematics.

   Log in to any node in each ring in the network and use the **`rtrv-map-network`** and/or **`rtrv-map-neighbor`** command to retrieve a map of the network which lists all the systems and how they are connected to each other.

   Sample output reports are shown in Figures 5, 6, and 7.

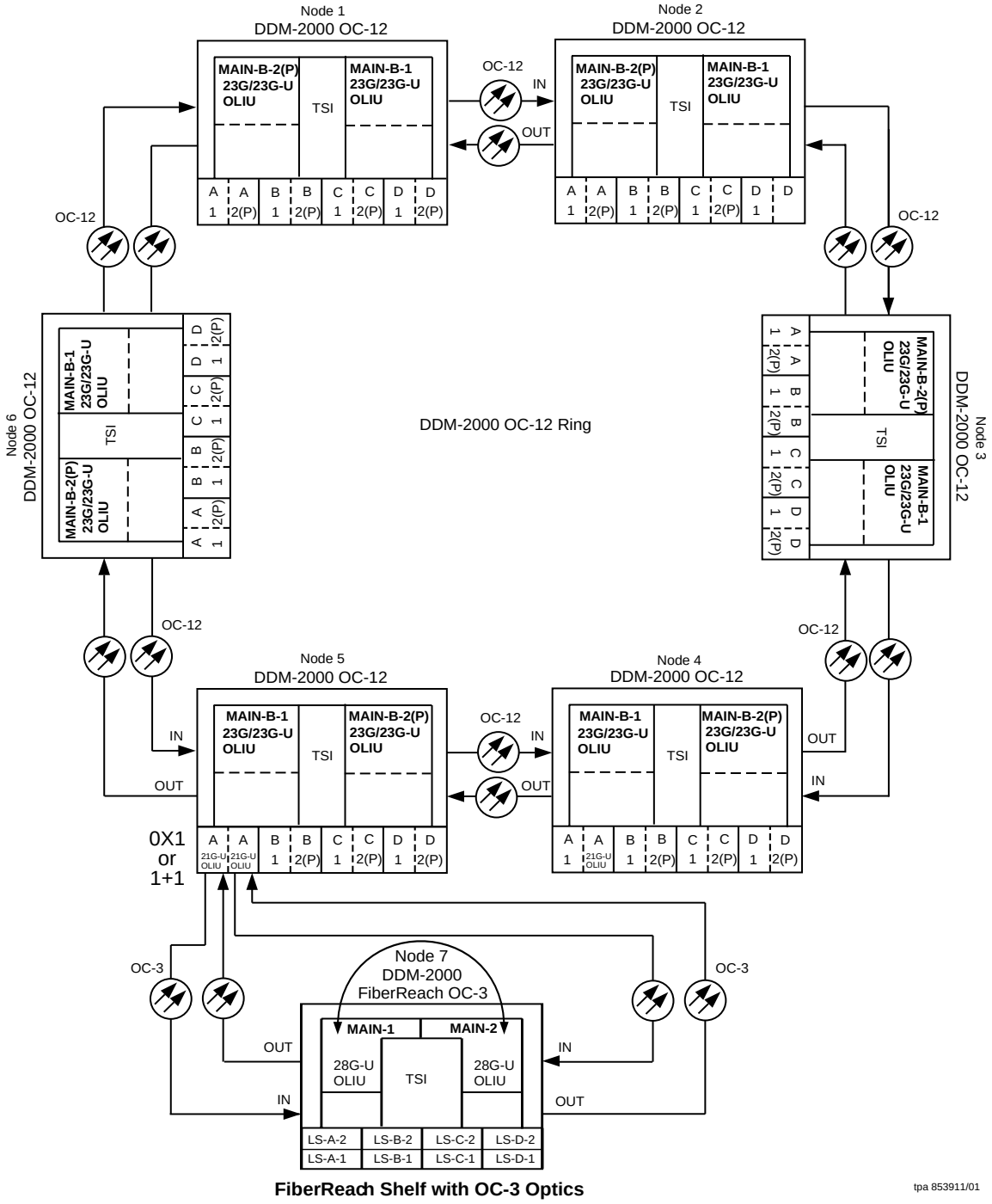

Figure 1. Sample 1 OC-3 Single Homed or Linear Extension Network Schematic

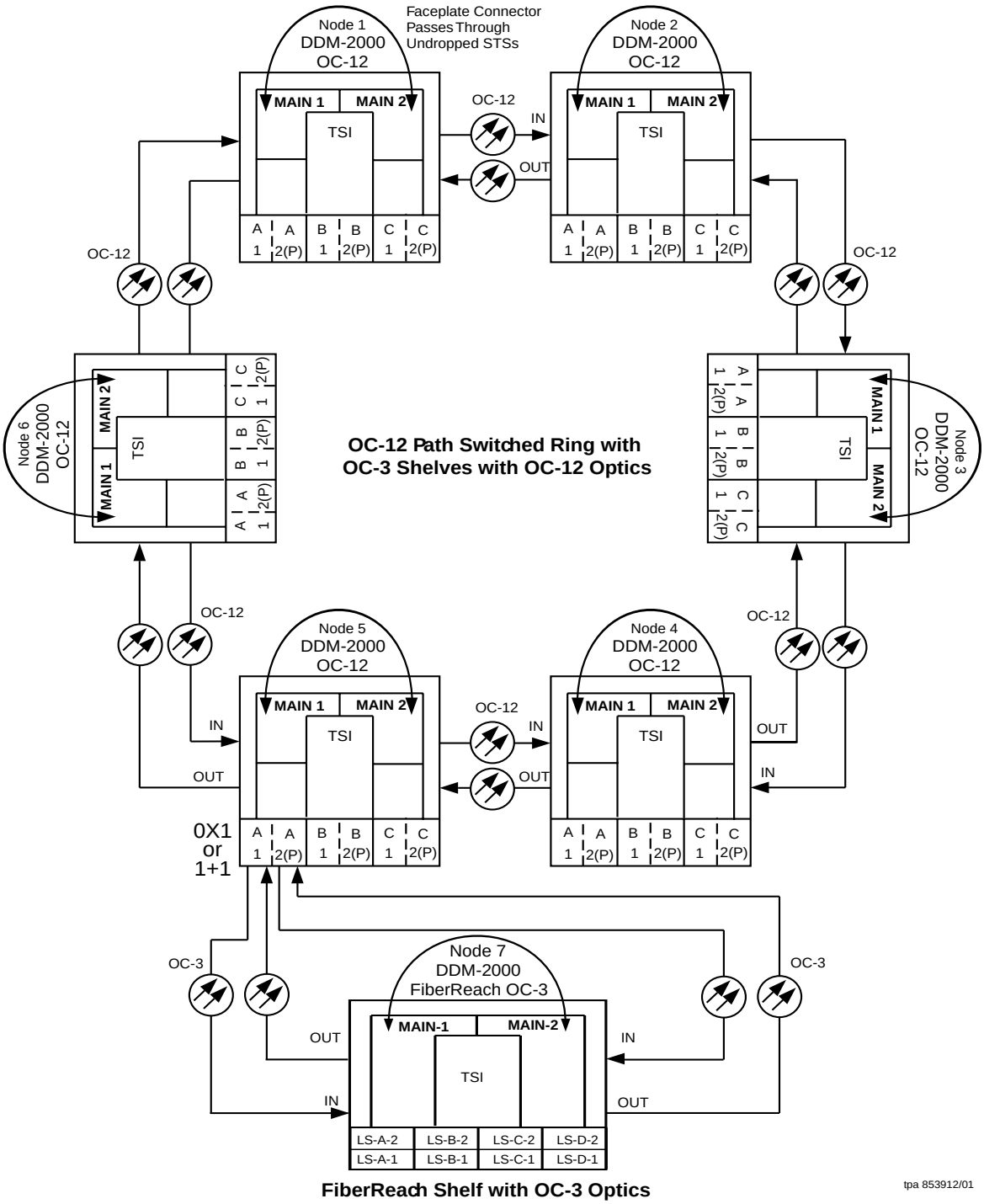

Figure 2. Sample 2 OC-3 Single Homed or Linear Extension Network Schematic

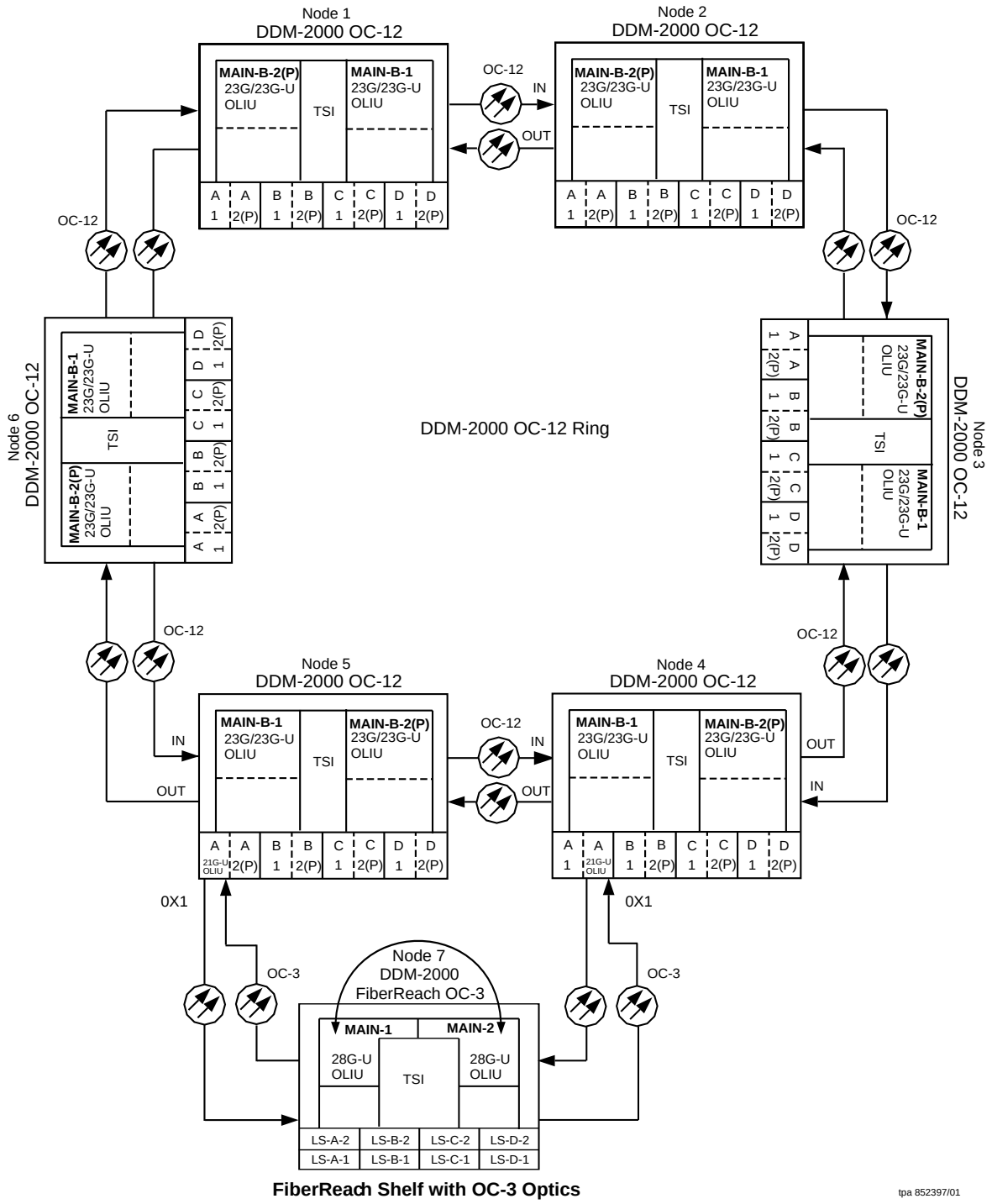

Figure 3. Sample 1 Dual Homed Network Schematic

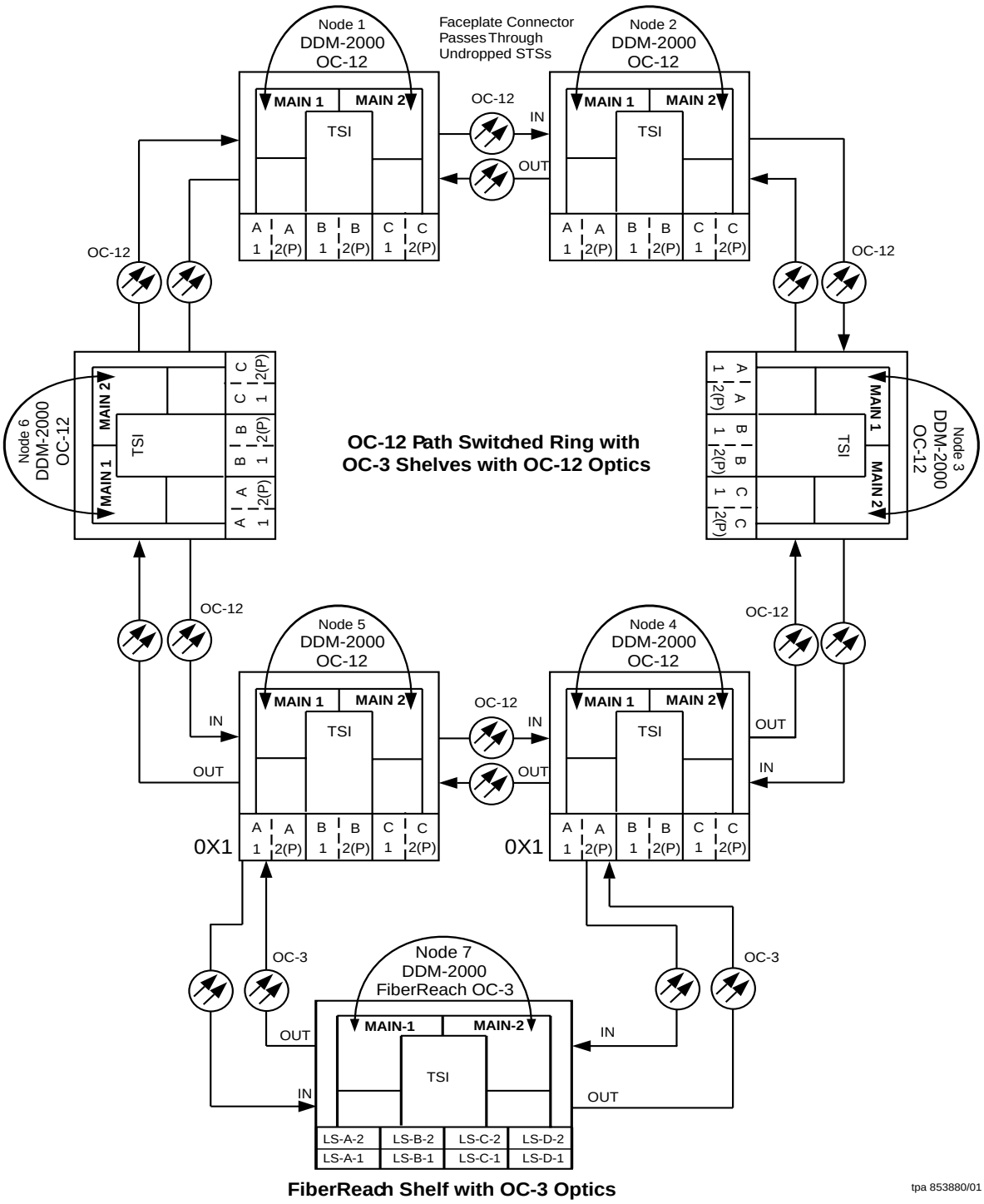

Figure 4. Sample 2 Dual Homed Network Schematic

```
/* Neighbor Map for Site6NE1
====================================================================
TID                          Product Type            Level 2 IS
NSAP
====================================================================
Site6NE1                     FiberReach
 39 840F 80 000000 0000 0000 0000 08006alad06e 00
R5
 39 840F 80 000000 0000 0000 0000 00000e3a0273 00
R6
 39 840F 80 000000 0000 0000 0000 00000e3a0273 00
R7
 39 840F 80 000000 0000 0000 0000 00000e3a0273 00
Site3NE1                                                  Y
 39 840F 80 000000 0000 0000 0000 00000e3a0372 00
Site7NE1
 39 840F 80 000000 0000 0000 0000 08006alad06f 00

*/
```

Figure 5. Sample Report From `rtrv-map-network` Command

```
/* Network Map for Site6NE1
====================================================================
TID                  Connected Thru    Product Type    Level 2 IS
NSAP
====================================================================
Site6NE1                                FiberReach
 39 840F 80 000000 0000 0000 0000 08006alad06e 00
Site7NE1               main-1
 39 840F 80 000000 0000 0000 0000 08006a1ad06f 00
Site5NE1               main-2
 39 840F 80 000000 0000 0000 0000 00000e3a0372 00
*/
```

Figure 6. Sample Report From `rtrv-map-neighbor` Command (Release 3.0)

```
/* Network Map for Site6NE1
==========================================================================
TID                  Connected Thru    Product Type    Level 2 IS  DCC
NSAP
==========================================================================
Site6NE1                               FiberReach
 39 840F 80 000000 0000 0000 0000 08006alad06e 00
Site7NE1               main-1
 39 840F 80 000000 0000 0000 0000 08006a1ad06f 00
Site5NE1               main-2                          ?           N
 39 840F 80 000000 0000 0000 0000 00000e3a0372 00
*/
```

Figure 7. Sample Report From `rtrv-map-neighbor` Command (Release 3.1 and Later)

2. Verify system configuration is same as specified on work order or circuit order. For example, see Figures 8 through 13.

3. **NOTE:**
   Cross-connections consist of drop and pass-through connections. For example in Figures 8 and 9, drop connections are made at Nodes 1, 4, and 5 or 4, 5, and 7. Pass-through cross-connections are made at other nodes in the network (Figures 3 and 4). Also, cross-connections must be made in all interconnected rings, including other FiberReach, DDM-2000 OC-3 rings, DDM-2000 OC-12 rings, FT-2000 OC-48, and WaveStar TDM OC-48/192 rings, as required. See **`ent-crs-( )`** command in the Commands and Reports section of Volume 1 of this manual.

   From work order or circuit order, determine the terminating (drop) nodes for the service being established.

4. From work order, circuit order, and the sketch made in Step 1, determine the pass-through nodes for the service being established.

5. From work order or circuit order, determine the host OC-12 node(s) that connects to the FiberReach OC-3 ring(s).

6. **NOTE:**
In dual homing configurations (Figures 8 through 11), **OLIU** circuit packs must be installed in the correct slots in the host OC-12 nodes to support the direction of traffic required. For example in Figures 8 and 9, for traffic to be routed between Node 1 (See Figures 3 and 4) and the OC-3 system, the **21** or **22-Type OLIU** must be installed in **FUNCTION UNITS** group **A**, **B**, **C**, or **D**, slot **1** of Node 5 and **FUNCTION UNITS** group **A**, **B**, **C**, or **D**, slot **2(P)** of Node 4. This is required because traffic entering Node 5, slot **FN-A-1** from the FiberReach shelf is automatically connected to the **MAIN-B-1**(**MAIN 1**) **OLIU** when cross-connections are made. Traffic entering slot **FN-A-2(P)** is automatically connected to the **MAIN-B-2** (**MAIN 2(P)**) **OLIU**.

In single homing or linear extension configurations (Figures 12 and 13), the **21-Type OLIU** in **FUNCTION UNITS** group **A**, **B**, **C**, or **D**, slot **1** of the OC-12 shelf must be connected to the **MAIN-1 OLIU** in the FiberReach shelf. The **21-Type OLIU** in **FUNCTION UNITS** group **A**, **B**, **C**, or **D**, slot **2(P)** of the OC-12 shelf must be connected to the **MAIN-2 OLIU** in the FiberReach shelf.

Use the **`rtrv-eqpt:`** command at each node in the network to verify that each shelf is properly equipped for the service being established. Ensure that OLIU circuit packs are installed in the correct slots in the host OC-12 nodes.

7. **NOTE:**
Cross-connections supporting DS1 services are VT1.5 cross-connections in DDM-2000 FiberReach. Only STS-1 cross-connections are allowed in DDM-2000 OC-12. If STS1 cross-connections are made at a FiberReach shelf, there is a fixed mapping of all 28 VT1.5 cross-connections to the function unit slots [see **`ent-crs-sts1`** command].

NOTE:
The following commands may be used to delete, enter, and retrieve cross-connections: **`dlt-crs-vt1`**, **`dlt-crs-sts1`**, **`ent-crs-vt1`** , **`ent-crs-sts1`**, **`rtrv-crs-vt1`**, and **`rtrv-crs-sts1`**. See the "Commands and Reports" section of each system manual for a description of commands .

NOTE:
In ring configurations, you should use the following rules in establishing cross-connections in each ring:

1. All terminating drop connections (including DRI, if present) from the same STS-1 timeslot must be provisioned the same, either all VT1.5 or STS-1.
2. If all 28 VT1.5s (DS1s) in an STS-1 are being passed through at a node in a VT1.5 path-switched ring, then the cross-connection may be provisioned as either a pass-through STS-1 or VT1.5.
3. On STS-1 path-switched rings, all nodes in the ring must be provisioned as STS-1 cross-connections.

From work order or circuit order, determine the cross-connections [STS-1 or VT1.5] to be made at each node [pass-through, terminating (drop), and host OC-12 node(s)] associated with the kind of service being established.

8. Starting at one of the terminating nodes for the DS1/STS1 circuit being established, use the **`rtrv-crs-( ):`** command at each node in the ring to verify that the cross-connections specified on the work order or circuit order may be made. For example, if the DS1 #1 low speed port in the DS1 circuit pack in slot #2 of Low Speed Group B (**LS-B-2**) is to be connected to timeslot m-1-2-1 and the **`rtrv-crs-vt1`** command shows that the cross-connection is already established, you should determine from office records if this port is already in-service before continuing with this procedure.

   If cross-connections are already assigned or improperly assigned, refer trouble to the organization responsible for facility design. Improperly assigned ross-connections may have to be deleted using the **`dlt-crs-( )`** commands.

9. **NOTE:**
   Channel state provisioning provides IS, AUTO, and NMON states for VT/STS1 channels similar to the port states for DS1 ports. When a cross-connection is made to a point of termination the channel is in the AUTO state and alarming is disabled. The channel must receive a good signal from either ring to cause the channel to transition to in-service (IS).

At all nonterminating pass-through nodes in the network, use the **`ent-crs-vt1:`** or **`ent-crs-sts1:`**) command to provision pass-through connections. [For example, to make the DS1 pass-through cross-connection for channel m-1-2-1 in other OC-3 shelves, use the **`ent-crs-vt1:m-1-2-1,m-1-2-1:cct=twoway`** command. To make pass-through cross-connections for STS-1 #1 in an OC-12 shelf, use the **`ent-crs-sts1:m-1,m-1:cct=twoway`** command.]

10. At both terminating (drop) nodes of the circuit being established, use the **`ent-crs-( ):`** command to make the terminating cross-connections (for example at the OC-3 node in Figures 8 and 9, **`ent-crs-vt1:m-1-2-1,b-2-1:cct=twoway`**)

11. At the host OC-12 ring node sites, make proper cross-connections. For example, in Figures 8 and 9 at Node 5, if STS-1 channel #1 from the OC-3 **MAIN-1 OLIU** is to be cross-connected to STS#1 in the OC-12 **MAIN-B-1 OLIU** then the command **`ent-crs-sts1:mb-1,a-1:cct=twoway`** would be used to make the cross-connection.

12. Use the **`rtrv-crs-vt1:`** or **`rtrv-crs-sts1:`** command to verify that the proper connections have been made. If an improper cross-connection is made, use the **`dlt-crs-vt1:`** or **`dlt-crs-sts1:`** command to delete the improper cross-connection and reenter the cross-connection.

13. At OC-12 terminating nodes equipped with **BBG11B 3DS3** circuit packs, use the **`set-trace-sts1`** command to verify the proper cross-connect path of a STS-1 cross-connected STS-1 signal.

14. After all cross-connections are made, use the **`rtrv-alm:`** command to verify no alarms are present.

15. If DS3 cross-connections have been established and the terminating nodes are equipped with **BBG4B DS3** circuit packs, use **`set-trace-sts1`** command to check integrity of cross-connect path.

    Reference: DLP-544

16. If `ne-acty`, `inc. VT AIS`, `inc. STS1 AIS`, `inc. VT unequipped`, or `inc. STS1 unequipped` alarms are present, look for missing or improperly made cross-connections. Use **TAP-118** to locate missing cross-connections, if required.

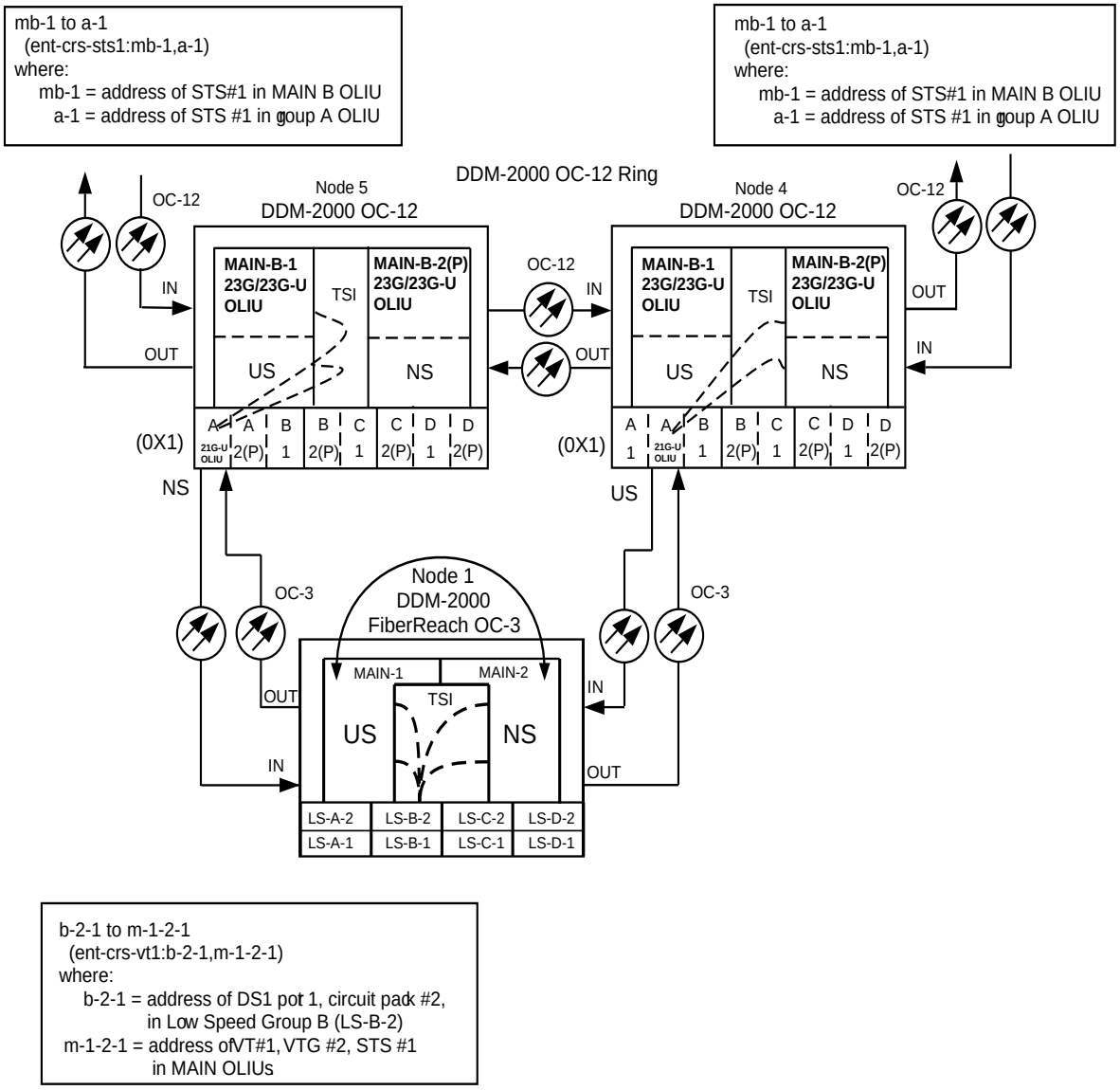

Figure 8. Example 1 of Dual Homing OC-12/OC-3 Cross-connections

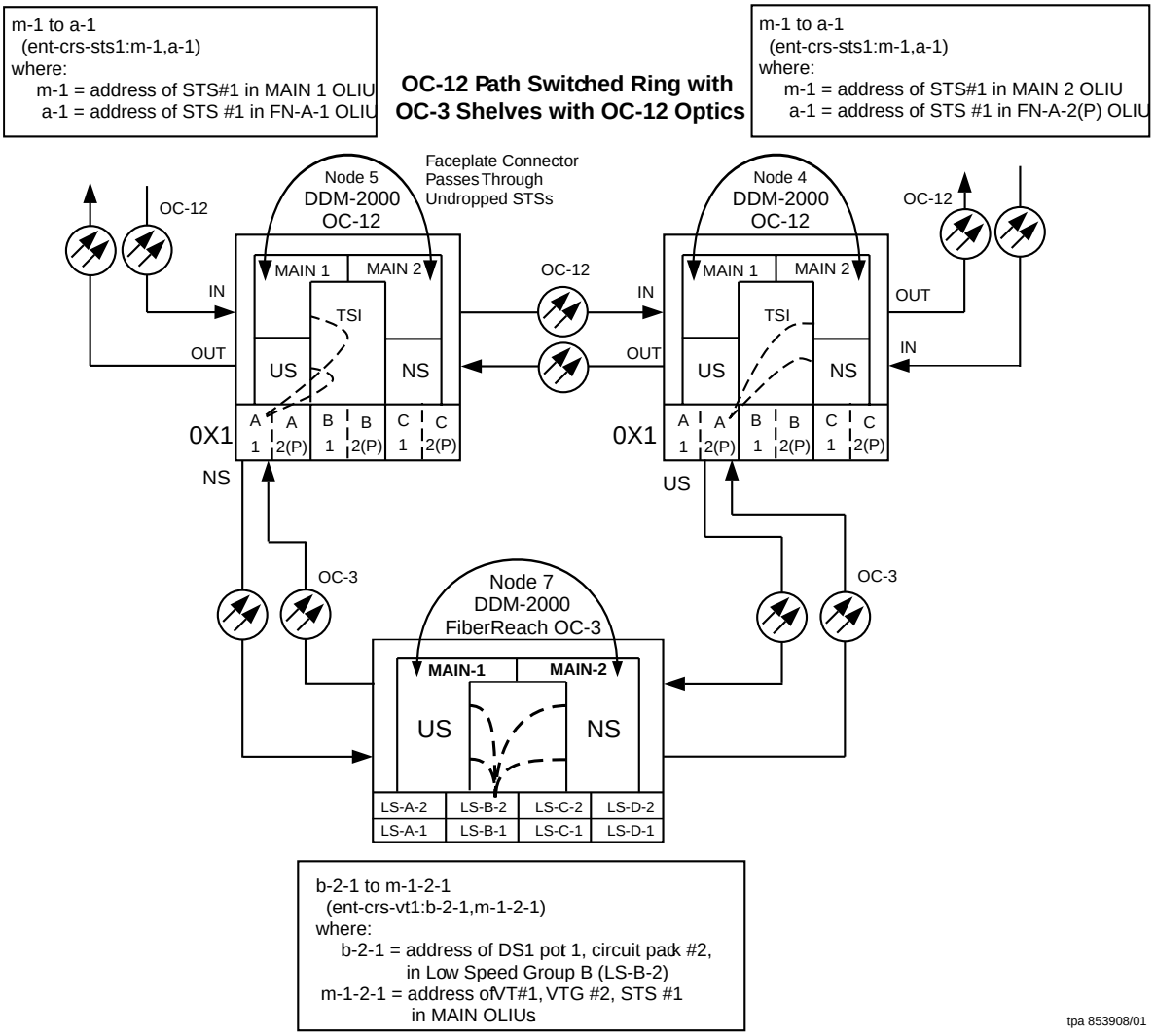

Figure 9. Example 2 of Dual Homing OC-12/OC-3 Cross-connections

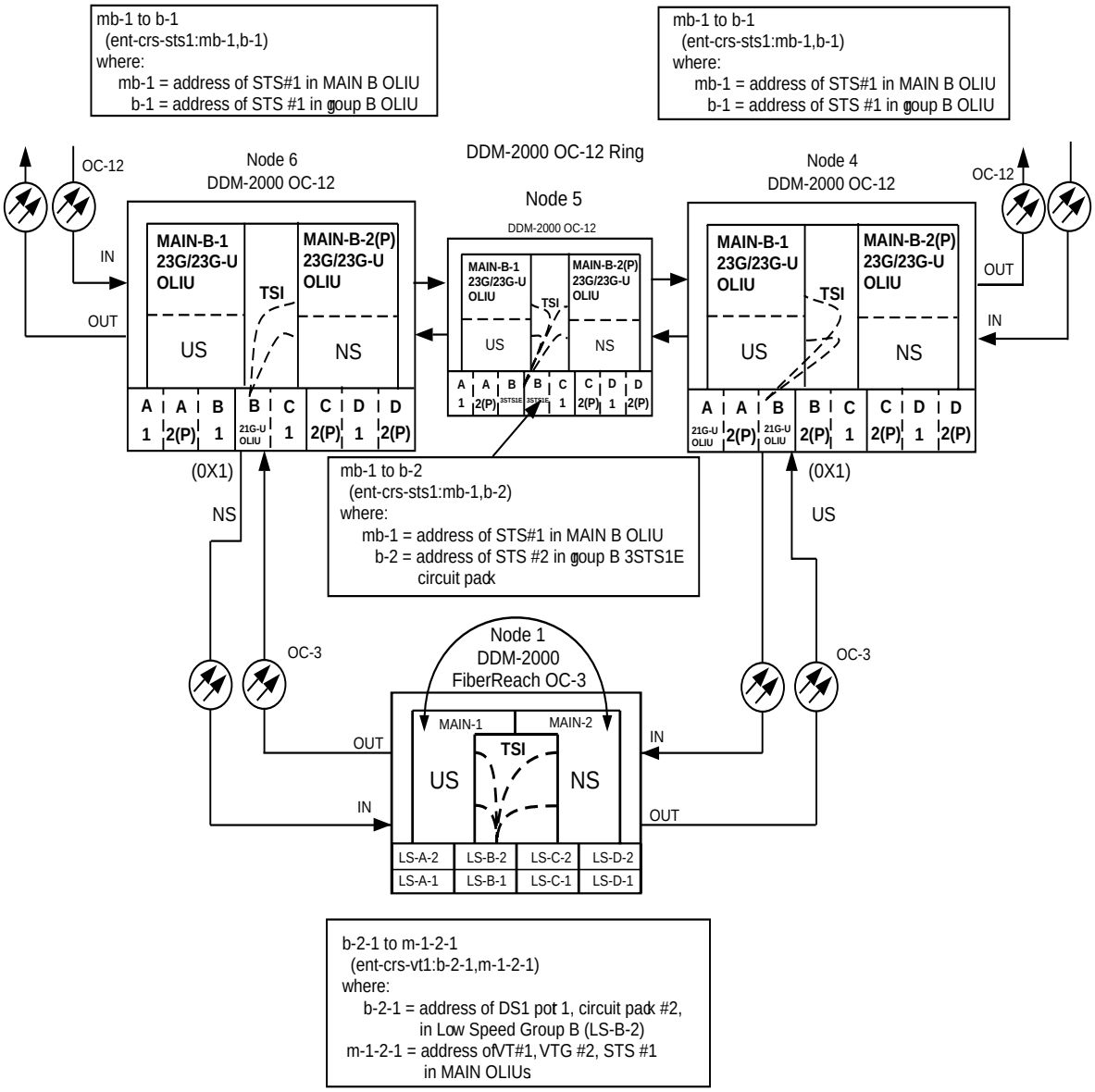

Figure 10. Example 1 of Dual Homing OC-12/OC-3 Cross-connections

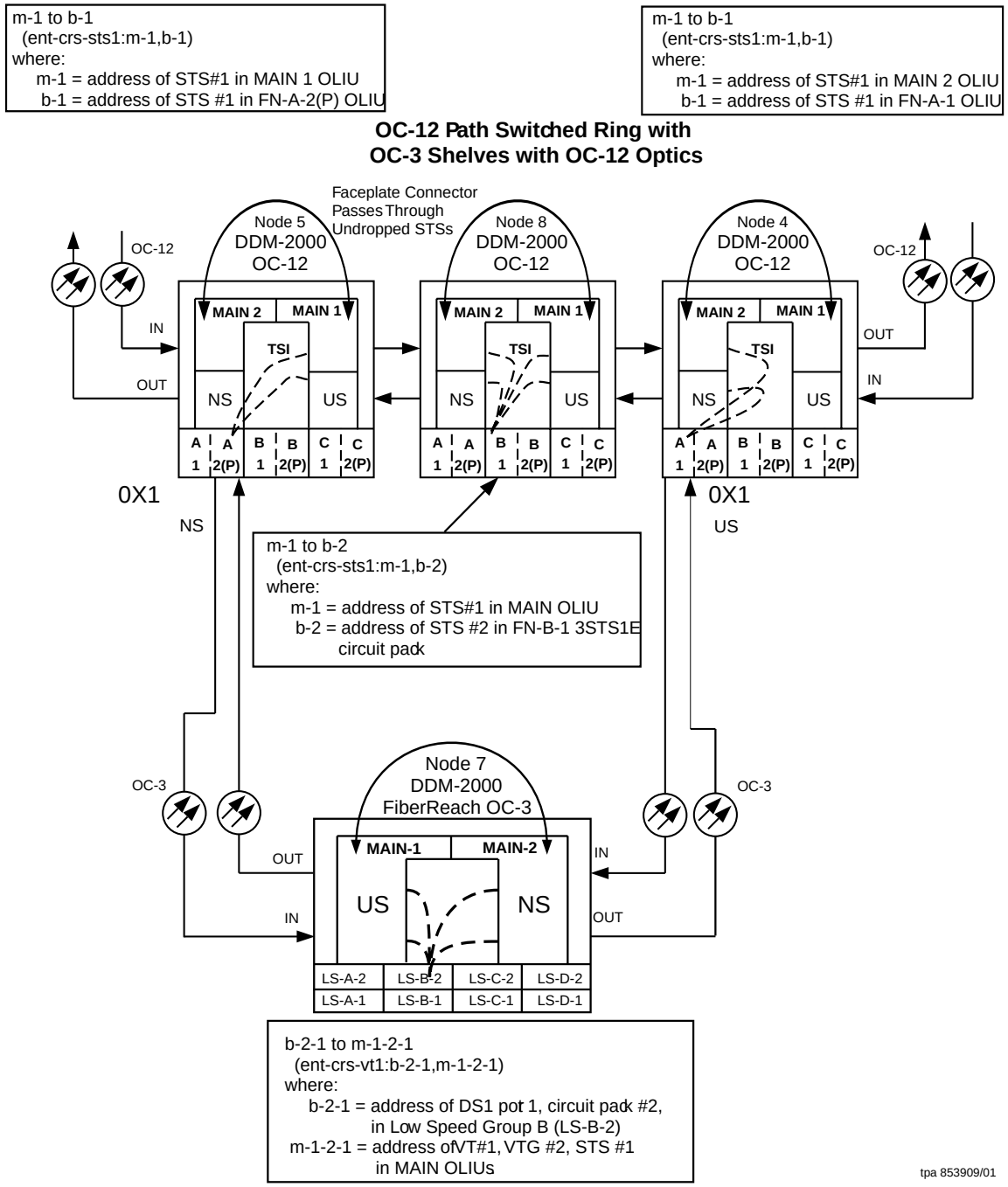

Figure 11. Example 2 of Dual Homing OC-12/OC-3 Cross-connections

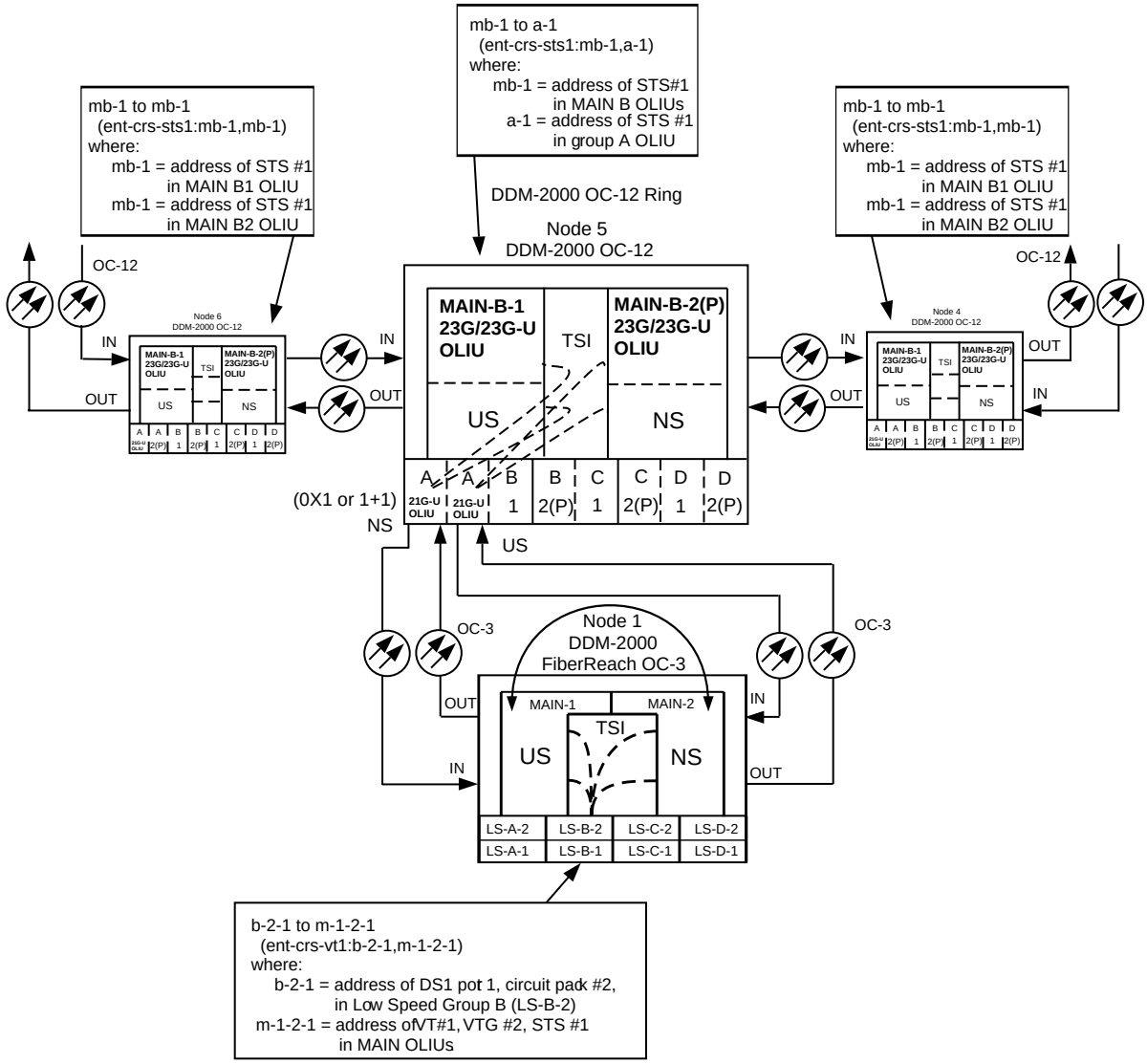

Figure 12. Example 1 of Single Homing or Linear Extension OC-12/OC-3 Cross-connections

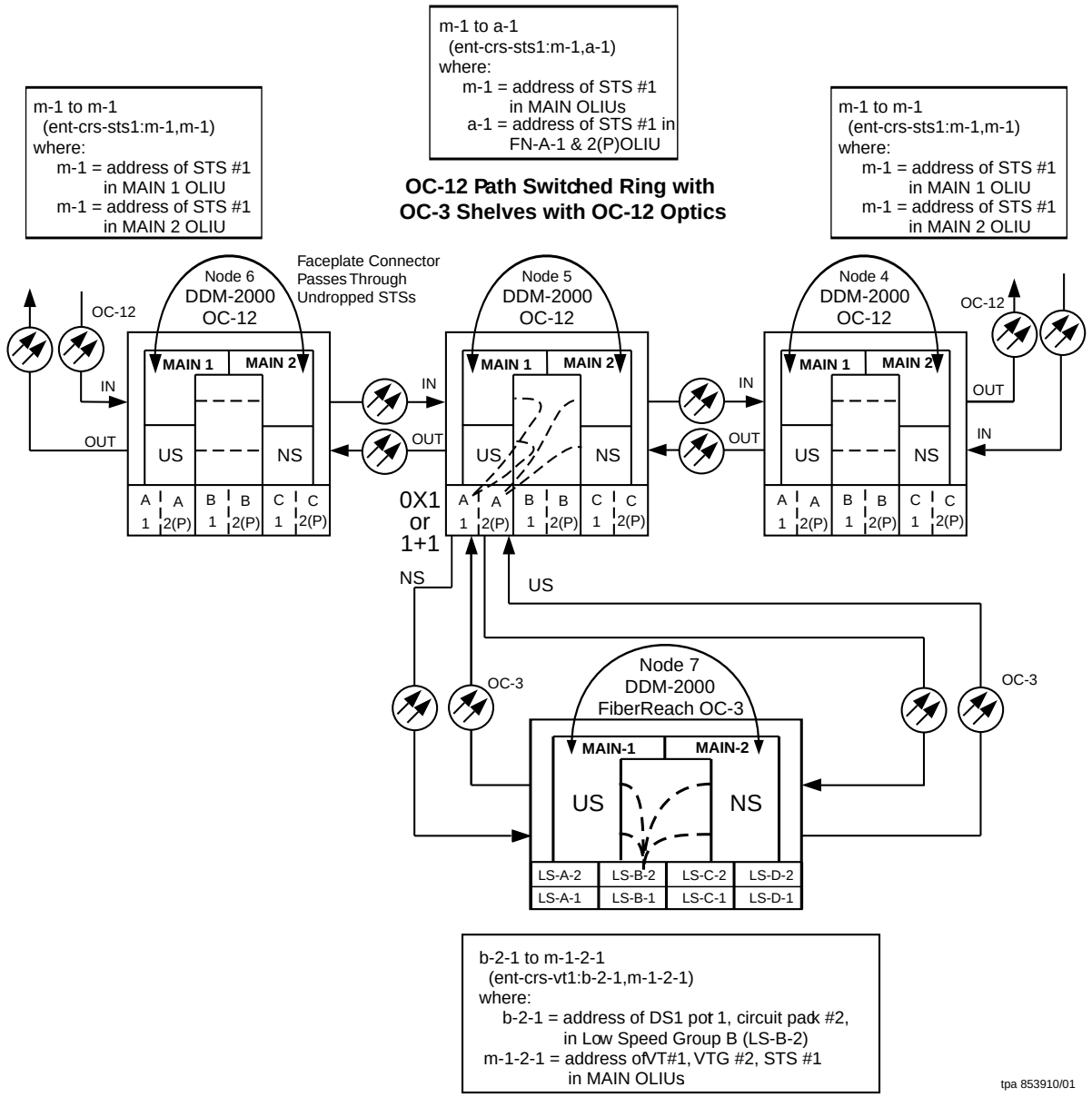

Figure 13. Example 2 of Single Homing or Linear Extension OC-12/OC-3 Cross-connections

Install New Software Generic Program
Network Element Software
In-Service System
Local Shelf Download

1. Before beginning the software installation, refer to the Software Installation and Upgrade Procedure section of the Software Release Description. This section contains a description of any special considerations required when installing this version of software.

2. **NOTE:**
   This procedure is used to install a new software program in a local in-service DDM-2000 FiberReach shelf. For procedures to download software in a new shelf (initial installation), see **DLP-525**. For procedures to download software to a remote shelf (using **`ins-prog:`** or **`cpy-prog:`** command), see **DLP-537**.

   NOTE:
   If upgrading from earlier non-TARP software releases to TARP Release 3.0 and later, after the first shelf is upgraded, single ended operations will not be available and major alarms (`section DCC channel failed`) will exist until all shelves are upgraded. The node farthest away should be upgraded first, working back to the local node.

   NOTE:
   If the **`ins-prog:`** command is used for software upgrades from TARP Release 3.1, the software is loaded as a dormant copy in the **SYSCTL** receiving the software. At the end of the download, the **`rtrv-alm:`** report will show a status message of *`dormant/exec code mismatch`*. The **`apply:`** command must be used to overwrite the original executing copy of software with the new dormant software version. See the Commands and Reports section in Volume 1 of this manual for a description of the **`apply:`** command.

Verify that no DCC failures or transmission failures (OC-1 LOS, OC-3 LOS, OC-12 LOS, flashing **OLIU FAULT** LEDs, etc.) are present on the network element or system receiving the program. For software upgrade compatibility, see Table A..

Table A – DDM-2000 FiberReach Inservice Software Upgrade Compatibility (Note)

	Upgrade to*
Current Release	**4.0**
1.0.n (OC-1)	C†
2.0.n (OC-1)	C†
2.1.n (OC-1)	C†
2.2.n (OC-1, OC-3)	C†
3.0.n (OC-1, OC-3)	U
3.1.n (OC-1, OC-3)	U

Note: All DDM-2000 FiberReach shelves in a subnetwork should be using TARP Release 3.0 or 4.0 software.

C Requires local software download only to upgrade the system.

U Requires local or remote software download only to upgrade the system.

† Incompatible OSI stack requires special considerations. See LTP 824-102-144, *Lucent Technologies 2000 Product Family, Operations Interworking Guide* for TARP Releases, for special considerations.

* When doing an upgrade, it is recommended that the latest point release of software be used, if possible.

3. **NOTE:**
If you are using a PC operating in a *Windows** environment, you must **exit** *Windows* and restart your PC in *MS-DOS* mode before performing these download procedures. For example, if your PC is running *Windows 95* you must exit *Windows* by clicking on the **Start** button, then **Shut Down**, then **Restart the computer in** *MS-DOS* **mode**.

Obtain equipment, check software, and connect PC for download.

Reference: DLP-541

* Registered trademark of Microsoft Corporation.

4. Observe one of the following indications on the **FE ID** display. Note the indication and follow the suggested procedure.

- **Letter "P" in FE ID Display:**

  Indicates no software installed in **SYSCTL**. Software must be downloaded locally using these procedures.

  Continue with **Step 5**.

- **Letter "P." in FE ID Display:**

  Indicates corrupted application software. New software must be force downloaded locally using these procedures.

  Proceed to **Step 18**.

- **FE ID Display Blank:**

  Indicates compatible software is installed in **OHCTL** and **SYSCTL**. This procedure assumes the installed software version is not the correct version. (Depress **ACO** button for longer than 2 seconds to display software version on the **FE ID** display.)

  Proceed to **Step 8**.

- **Letter "C" in FE ID Display:**

  Indicates software is installed in **SYSCTL**, but it will not support the current shelf provisioning.

  Proceed to **Step 22**.

- **Letter "U" in FE ID Display:**

  Indicates **SYSCTL** Switch **S1** is not set properly for type of shelf being equipped.

  Remove **SYSCTL**. Repeat procedures of **DLP-501** to correct switch settings and to reinstall **SYSCTL**.

- **Letter "E" in FE ID Display:**

  Indicates **SYSCTL** must be replaced.

  Get replacement **SYSCTL** and repeat procedures of **DLP-501**.

- **Letter "F" in FE ID Display:**

  Indicates **SYSCTL** faceplate latch is not fully seated. If **SYSCTL** has just been replaced, unplug **SYSCTL** and repeat procedures of **DLP-501**. If original **SYSCTL** has just been unplugged and reseated, properly seat the faceplate latch. (A reset occurs after the faceplate is seated.)

- **Flashing Letter "L" in FE ID Display:**

  Indicates a low voltage condition (brownout) on the shelf.

  Clear trouble using **Trouble Clearing: TAP-119**.

Letter "P" in FE ID Display:

5. **CAUTION:**
If PC hard drive is being used, ensure you are in the correct directory. If floppies are being used, ensure the first (number 1) diskette is installed in floppy drive. Ensure PC is connected to the front CIT (CIT-1) connector.

NOTE:
After the terminal emulator (**`term`**) is started, the software download automatically begins. The download may take 20 to 45 minutes.

Enter **`term`** or **`term COM`***n* command, where *n* = 1 or 2. If **`term`** is entered without the **`COM`***n* option, then **COM1** will be selected by default. Disregard message `Can't find script <init>` if you see it after starting the terminal emulator.

Response: Two brief messages are printed and you are instructed to `Press any key to continue . . .` after the second message. After you press any key, the terminal emulator is loaded and the terminal responds as follows within 2 minutes:

```
CTRM ready. (Type Alt-h for help.)
Communications established.

Searching for optimal transfer rate.
Handshake established at <baudrate> baud.

In progress . . . .
```

The dots continue to print until program installation is complete. If using floppies, insert each diskette when prompted. After installation is completed, the PC prints the following completion message:

```
ins-prog:TID COMPLD
/* Generic a.b.c is installed */
```

The **SYSCTL** resets and the terminal is logged off the system.

6. Was response correct?

If **YES**, continue with **Step 7**.
If **NO**, proceed to **Step 26**.

7. Did the letter "**C**" appear in the **FE ID** display?

If **NO**, **STOP. YOU HAVE COMPLETED THIS PROCEDURE**.
If **YES**, proceed to **Step 22**.

FE ID Display Blank:

8. **NOTE:**
If PC hard drive is being used, ensure you are in the correct directory. If floppies are being used, ensure the first (number 1) diskette is installed in floppy drive.

Enter **`term`** or **`term COM`***n* command, where *n* = 1 or 2. If **`term`** is entered without the **`COM`***n* option, then **COM1** will be selected by default. Disregard message `Can't find script <init>` if you see it after starting the terminal emulator.

Response: Two brief messages are printed and you are instructed to `Press any key to continue . . .` after the second message. After you press any key, the terminal emulator is loaded and the terminal responds as follows:
```
CTRM ready. (Type Alt-h for help.)
Communications established.
```

9. **NOTE:**
The default shelf is the shelf physically connected to the PC. To set baud rate automatically, enter two carriage returns (**<cr>**), two lower case "a"s (**aa**), or two upper case "A"s (**AA**). All other characters are ignored.

Enter two carriage returns.

Response: PC prompts with:
```
/* Enter a shelf number from 1 to 8 */
shelf [default] =
```

10. Was response correct?

If **YES**, continue with **Step 11**.
If **NO**, proceed to **Step 27**.

11. Enter the shelf number for the shelf being used for new program download.

    Response: PC responds with:

```
/*************************************
*                                   *
*         Lucent Technologies       *
*         DDM-2000 FiberReach       *
*                                   *
*            Release a.b.c          *
*                                   *
*************************************/

                    .

                    .

                    .

   TID date time
M  rtrv-alm:all COMPLD
   /* Active Alarms and Status Report
```

12. **NOTE:**
    After the system prompt (<), the system will respond normally to commands entered. The "Commands and Reports" section of Volume 1 of this manual gives a description of the commands.

    Use **`rtrv-ne:`** command to retrieve the name (tid) of the shelf having new program installed or see `TID` in response above. .

13. Enter the command **`ins-prog:`**`tid.`

    Where tid = the target identifier (shelf name) for the DDM-2000 shelf having the new program installed.

    Where pgmtype = the type of software you want to install.

    Response: `/*\ Testing For Program Installation...\ */`

    After several seconds, the PC prints a `Caution!` message followed by the prompt:

    `Execute? y/n =`

14. Was response correct?

    If **YES**, continue with **Step 15**.
    If **NO**, do **Trouble Clearing: TAP-116**.

15. Enter a *y* or *yes* and a carriage return to execute the program. Software download may take 20 to 45 minutes.

    Response: **ABN** LED lights on User Panel and a "**P**" is displayed in **SYSCTL FE ID** display in the shelf receiving the program. PC starts download and prints the following message:

    ```
    Searching for optimal transfer rate.
    Handshake established at <baudrate> baud.
    ```

    ```
    In progress . . . .
    ```

    The dots continue to print until program installation is complete. If floppy disks are being used, insert each diskette when prompted. After installation is completed, the PC prints the following completion message:

    ```
    ins-prog:TID COMPLD
    /* Generic a.b.c is installed */
    ```

16. Was response correct?

    If **YES**, continue with **Step 17**.
    If **NO**, do **Trouble Clearing: TAP-116**.

17. Did the letter "**C**" appear in the **FE ID** display?

    If **NO**, proceed to **Step 32**.
    If **YES**, proceed to **Step 22**.

Letter "P." in FE ID Display:

18. ⚠ **CAUTION:**
If PC hard drive is being used, ensure you are in the correct directory. If floppies are being used, ensure the first (number 1) diskette is installed in floppy drive. Ensure PC is connected to the front CIT (CIT-1) connector.

Enter **`term`** or **`term COM`***n* command, where *n* = 1 or 2. If **`term`** is entered without the **`COM`***n* option, then **COM1** will be selected by default. Disregard message `Can't find script <init>` if you see it after starting the terminal emulator.

Response: Two brief messages are printed and you are instructed to `Press any key to continue . . .` after the second message. After you press any key, the terminal emulator is loaded and the terminal responds as follows:
`CTRM ready. (Type Alt-h for help.)`
`Communications established.`

19. Unplug and reseat the **SYSCTL** and immediately push and hold the **FE SEL** and **UPD/INIT** buttons at the same time until a **P** appears in the **FE ID** display (takes approximately 15 seconds). The software download automatically begins and may take 20 to 45 minutes.

Response: PC starts download and prints the following message:

```
Searching for optimal transfer rate.
Handshake established at <baudrate> baud.
```

```
In progress . . . .
```

The dots continue to print until program installation is complete. If using the floppy disks, insert each diskette when prompted. After installation is completed, the PC prints the following completion message:

```
ins-prog:TID COMPLD
/* Generic a.b.c is installed */
```

The **SYSCTL** resets and the terminal is logged off the system.

20. Was response correct?

    If **YES**, continue with **Step 21**.
    If **NO**, proceed to **Step 26**.

21. Did the letter "**C**" appear in the **FE ID** display?

    If **NO**, proceed to **Step 32**.
    If **YES**, continue with **Step 22**.

Letter "C" in FE ID Display:

22. **CAUTION:**
If the system is in service and is forced to run the current software that is displaying a "**C**"*, service interruption may result.*

NOTE:
Indications are that there may be a problem with the version of software you are installing or you are trying to install a version of software that will not support the current shelf provisioning. If you are downloading an older version of software or upgrading to a new version of software which has major changes or is incompatible with the version that you have, this indication will occur (See Table A). You can *force* the system to run the current software or back out of this procedure by loading another version of software.

You must decide if you want the system to run this current version of software that has been loaded or if you want to download another version (original version or new version) of software.

Do you want to run the current version of software in the **SYSCTL**?

If **NO**, continue with **Step 23**.
If **YES**, proceed to **Step 24**.

23. Exit TERM (Alt-F2). Find new version of software and repeat this procedure from **Step 18**.

24. To *force* the system to run the current software, reset (unplug and reseat) the **SYSCTL** to force it to run the current software.

25. **STOP. YOU HAVE COMPLETED THIS PROCEDURE**.

26. Did the download start as indicated by the `In progress` message and rows of dots?

If **NO**, continue with **Step 27**.
If **YES**, proceed to **Step 29**.

27. Perform the following:

    A. Check that the DDM-2000 is connected to the PC through the **COM** port. If it is not, reconnect the PC to DDM-2000 using the **COM** port and repeat this procedure.

    B. Ensure first (number 1) disk of program being installed is inserted, if using floppies.

    C. Ensure diskette is inserted in correct drive.

    D. Ensure the proper command was used to go to the drive with the diskette or to the proper directory containing the software.

    E. Check for invalid COM port. Exit TERM (**Alt F2**), then restart TERM using **term COM1** or **term COM2**.

    F. If the download still does not start, as indicated by the `In progress` message and rows of dots, within 2 minutes after the **P** appears in the **FE ID** display, change the baud rate as follows and repeat this procedure: if the baud rate is currently set to 9600, change it to 4800 or if the baud rate is currently set to 4800, change it to 9600. The baud rate is changed by:

        1. Momentarily depress the **Alt C** keys.
        2. Use the RETURN key to move to the "Speed" field.
        3. Press the "Space" bar until the desired rate appears.
        4. Momentarily depress the **Esc**(Escape) key to activate the new baud rate.

    G. If the download still does not start, refer to **Trouble Clearing: TAP-116**.

28. **STOP. YOU HAVE COMPLETED THIS PROCEDURE**.

29. If the download *starts and fails* during its progress, exit term (Alt-F2) and then restart a new term session.

30. Unplug and reseat the **SYSCTL** and immediately push and hold the **FE SEL** and **UPD/INIT** buttons at the same time until a **P** appears in the **FE ID** display (takes approximately 15 seconds).

    If the download still does not complete, refer to **Trouble Clearing: TAP-116**.

31. **STOP. YOU HAVE COMPLETED THIS PROCEDURE**.

32. Use the **`rtrv-alm:`** command to display alarm and status information.

33. Does status message `dormant/exec code mismatch` appear in the report for this shelf?

    If **NO**, **STOP. YOU HAVE COMPLETED THIS PROCEDURE**.
    If **YES**, continue with **Step 34**.

34. **NOTE:**
    The software you downloaded has been loaded as a dormant copy in this shelf. The original software is still the executing software. The **`apply:`** command must be used at this shelf to install the dormant copy of software as an executing copy. When the **`apply:`** command is executed during an upgrade from Release 3.1 or later, if you do not specify a **`time`** and **`date`** parameter, there is a default 15-minute delay before the dormant copy installation begins. Once the installation begins, the dormant copy is installed in approximately 10 minutes.

    See the Commands and Reports section of Volume 1 of this manual for a description of the **`apply:`** command. The **`apply:`** command allows you to coordinate the software download across the network.

    Are you going to use the **`apply:`** command at this time to install the dormant version of software?

    If **YES**, continue with **Step 35**.
    If **NO**, **STOP. YOU HAVE COMPLETED THIS PROCEDURE**.

35. Execute the **`apply:`** command at the shelf to receive the software.

    Response: A "**P**" appears in the **FE ID** display when the installation begins.
    The **SYSCTL** resets after the software is installed.
    LEDs and **FE ID** display go off on **SYSCTL** and User Panel.
    You are logged off the system.
    After approximately 5 minutes you can log back into the shelf and reestablish communications.

36. Was response correct?

    If **YES**, **STOP. YOU HAVE COMPLETED THIS PROCEDURE**.
    If **NO**, continue with **Step 37**.

37. Did the letter "**C**" appear in the **FE ID** display?

    If **NO**, do **Trouble Clearing: TAP-116**.
    If **YES**, proceed to **Step 22**.

Install New Software Generic Program
Network Element Software
Remote Shelf Download
In-Service System

1. Before beginning the software installation, refer to the Software Installation and Upgrade Procedure section of the Software Release Description. This section contains a description of any special considerations required when installing this version of software.

2. **NOTE:**
   This procedure uses the **`cpy-prog:`** or **`ins-prog:`** commands to install a new software program in a remote in-service DDM-2000 FiberReach shelf. It is assumed that the local shelf has already been upgraded and the software is running normally or has been installed as a dormant copy. For procedures to download software in a new shelf (initial installation), see **DLP-525**. For procedures to download software locally to a shelf, see **DLP-536**.

   NOTE:
   If upgrading from earlier software releases to TARP Release 3.0 and later, after the first shelf is upgraded, single-ended operations will not be available and major alarms (`section DCC channel failed`) will exist until all shelves are upgraded. The node farthest away should be upgraded first, working back to the local node. See 824-102-144, *Lucent Technologies 2000 Product Family, Operations Interworking Guide For TARP Releases*, for guidelines in subnetwork upgrade procedures.

Verify that no DCC failures or transmission failures (OC-1 LOS, OC-3 LOS, OC-12 LOS flashing **OLIU FAULT** LEDs, etc.) are present on the network element or system receiving the program. For software upgrade compatibility, see Table A .

Table A – DDM-2000 FiberReach Inservice Software Upgrade Compatibility (Note)

	Upgrade to*
Current Release	**4.0**
1.0.n (OC-1)	C†
2.0.n (OC-1)	C†
2.1.n (OC-1)	C†
2.2.n (OC-1, OC-3)	C†
3.0.n (OC-1, OC-3)	U
3.1.n (OC-1, OC-3)	U

Note: All DDM-2000 FiberReach shelves in a subnetwork should be using TARP Release 3.0 or 4.0 software.

C Requires local software download only to upgrade the system.

U Requires local or remote software download only to upgrade the system.

† Incompatible OSI stack requires special considerations. See LTP 824-102-144, *Lucent Technologies 2000 Product Family, Operations Interworking Guide* for TARP Releases, for special considerations.

* When doing an upgrade, it is recommended that the latest point release of software be used, if possible.

3. Use **`rtrv-fecom`**/**`set-fecom`** command to verify/enable far-end communications (fecom).

4. **NOTE:**
When the **`ins-prog:`** or **`cpy-prog:`** command is used for software upgrades from Release 3.1 or later, the software is loaded as a dormant copy in the **SYSCTL** receiving the software. At the end of the download, the **`rtrv-alm:`** report will show a status message of *`dormant/exec code mismatch`*. The **`apply:`** command must be used to overwrite the original executing copy of software with the new dormant software version. See the Commands and Reports section in Volume 1 of this manual for a description of the TARP Release 3.1 and 4 **`apply:`** command.

5. **NOTE:**
If you want to load new software to a remote shelf (if allowed) directly **from a PC**, use the **`ins-prog:`**`tid` command where the tid entered is that of the remote shelf where you want to install the new software and the pgmtype is the type of software you want to install. After using the **`ins-prog:`**`tid` command to download software to one shelf, you must exit **`term`** (**Alt F2**) and re-execute **`term`** before starting a second **`ins-prog:`** command. If **`term`** is not exited, it will stop running if a second **`ins-prog:`** is started within the same **`term`** session. The PC will not respond or return any message and the **`ins-prog:`** will not progress.

NOTE:
If remote software downloading is allowed and you want to load new software to a remote site via the DCC **from a local shelf** which already contains the new software, log in (either locally or remotely) to the shelf containing the new software, and then enter the **`cpy-prog:`**`tid` command (where `tid` = the tid of the shelf in which you want to install the software and the pgmtype is the type of software you want to install). [The tid is the name given to a shelf (network element) using the **`set-ne:`** command.] The **`cpy-prog:`** command will only copy software from a local controller to a remote controller; it is not used to download software from a PC.

NOTE:
The download time will be longer (even without excessive DCC traffic) when there are additional spans between the source and target network elements. To minimize the download time and reduce DCC traffic, it is recommended that multi-span software downloading be avoided by remotely logging into the nearest shelf of the same type and remotely downloading the new program from that shelf.

NOTE:
If you are using a PC operating in a *Windows** environment, you must **exit** *Windows* and restart your PC in *MS-DOS** mode before performing these download procedures. For example, if your PC is running *Windows 95* you must exit *Windows* by clicking on the **Start** button, then **Shut Down**, then **Restart the computer in** *MS-DOS* **mode**.

Obtain equipment, check software, and connect PC for download.

Reference: **DLP-566**

---

* Registered trademark of Microsoft Corporation.

6. Are you using **`ins-prog:`** or **`cpy-prog:`** command to download software to far-end shelf?

   If **CPY-PROG**, continue with **Step 7**.
   If **INS-PROG**, proceed to **Step 14**.

7. ⚠ **CAUTION:**
   Only one **`cpy-prog:`** *procedure at a time should be performed in the same maintenance subnetwork. Simultaneous* **`cpy-prog:`** *procedures in the same network may fail.*

   Connect and establish session with local shelf being used as a source for the new remote program download.

   Reference: **DLP-521**

8. Enter the command **`cpy-prog:`**`tid.`

   Where tid = the target identifier (shelf name) for the remote DDM-2000 shelf receiving the new program.

   Where pgmtype = the type of software you want to install.

   Response: `/* Testing For Program Installation... */`

   After several seconds, the PC prints a `Caution!` message followed by the prompt:

   `Execute? y/n =`

9. Was response correct?

   If **YES**, continue with **Step 10**.
   If **NO**, do **Trouble Clearing: TAP-116**.

10. Enter a *y* or *yes* and a carriage return to execute the program. Software download may take up to 20 minutes.

    Response: **ABN** LED lights on User Panel. A "**P.**" is displayed in **SYSCTL FE ID** display in the far-end shelf receiving the program (for uncompressed executing copy download, not if dormant copy is being loaded). At DDM-2000 shelves connected directly to the shelf receiving the program, **MJ** and **NE ACTY** LEDs light on User Panel. At other shelves in the same control system, **MJ** and **FE ACTY** LEDs light on User Panel. Download begins and the following message is displayed:

    ```
    In progress . . . .
    ```

    The dots continue to print until program installation is complete. After installation is completed, the PC prints the following completion message:

    ```
    ins-prog:TID COMPLD
    /* Generic a.b.c is installed */
    ```

    The LEDs go off on the User Panel and **SYSCTL**.

11. Was response correct?

    If **YES**, proceed to **Step 27**.
    If **NO**, continue with **Step 12**.

12. Wait approximately 5 minutes for network to stabilize then repeat this procedure from **Step 7**. If the second attempt to download software fails, then do **Trouble Clearing: TAP-116**. You may have to go to the remote site.

13. **STOP. YOU HAVE COMPLETED THIS PROCEDURE.**

14. **NOTE:**
    The **FE ID** display on the remote **SYSCTL** must show one of the following preceding software installation. Other conditions represent failure conditions or conditions that will not allow a remote software download.

    A. The letter "**P.**" displayed in the **FE ID** display indicates corrupted application software and you may be able to download software from another shelf, or locally. Try again to download software from same shelf. If there is no period after the "**P**", the software can only be downloaded locally using the procedures of **DLP-536**.

B. Nothing displayed in the **FE ID** display indicates that compatible software is installed in the **SYSCTL** and you may download software remotely if remote software downloading is permitted for this release.

Ensure PC is connected to the front CIT (CIT-1). If floppies are being used, ensure the first (number 1) diskette is installed in floppy drive. If hard drive is being used, ensure you are in the correct directory.

15. Enter **`term`** or **`term COM`***n* command, where *n* = 1 or 2. If **`term`** is entered without the **`COM`***n* option, then **COM1** will be selected by default. If after starting the terminal emulator you see the message `Can't find script <init>`, disregard it.

    Response: Two brief messages are printed and you are instructed to `Press any key to continue . . .` after the second message. After you press any key, the terminal emulator is loaded and the terminal responds as follows:
    `CTRM ready. (Type Alt-h for help.)`
    `Communications established.`

16. **NOTE:**
    The default shelf is the shelf physically connected to the PC. To set baud rate automatically, enter two carriage returns (**<cr>**), two lower case "a"s (**aa**), or two upper case "A"s (**AA**). All other characters are ignored.

    Enter two carriage returns.

    Response: PC prompts with:
    `/* Enter a shelf number from 1 to 8 */`
    `shelf [default] =`

17. Was response correct?

    If **YES**, proceed to **Step 19**.
    If **NO**, continue with **Step 18**.

18. Check PC to **CIT** port connections. Make sure the cable is connected between the PC **COM( )** port and the **CIT** connector on the DDM-2000. Check term setup and make sure the **com** port selected matches the port (**COM( )**) on the PC that is connected to the **CIT** port on the shelf.

    Exit term (Alt-F2) and repeat this procedure from **Step 14**.

19. Enter the shelf number for the local shelf being used for new program download.

    Response: PC responds with:

```
login<
password<

    /*************************************
    *                                   *
    *                                   *
    *         Lucent Technologies       *
    *         DDM-2000 FiberReach       *
    *                                   *
    *           Release a.b.c           *
    *                                   *
    *************************************/

                        .

                        .

                        .

    TID date time
 M  rtrv-alm: all COMPLD
    /* Active Alarms and Status Report
```

20. **NOTE:**
    After the system prompt (<), the system will respond normally to commands entered. The Commands and Reports section of this manual gives a description of the commands.

    Use **`rtrv-map-network:`** command to retrieve the name (`tid`) of the remote shelf having new program installed.

21. Enter the command **`ins-prog:`**`tid.`

    Where tid = the target identifier (shelf name) for the far-end DDM-2000 shelf having the new program installed.

    Where pgmtype = the type of software you want to install.

    Response: `/* Testing For Program Installation... */`

    After several seconds, the PC prints a `Caution!` message followed by the prompt:

    `Execute? y/n =`

22. Was response correct?

    If **YES**, continue with **Step 23**.
    If **NO**, do **Trouble Clearing: TAP-116**.

23. Enter a *y* or *yes* and a carriage return to execute the program. Software download may take up to 45 minutes.

    Response: **ABN** LED lights on User Panel. A "**P.**" is displayed in **SYSCTL FE ID** display in the far-end shelf receiving the program (for uncompressed executing copy download, not if dormant copy is being loaded). PC starts download and prints the following message:

    ```
    Searching for optimal transfer rate.
    Handshake established at <baudrate> baud.
    ```

    `In progress . . . .`

    The dots continue to print until program installation is complete. If floppy disks are being used, insert each diskette when prompted. After installation is completed, the PC prints the following completion message:

    ```
    ins-prog:TID COMPLD
    /* Generic a.b.c is installed */
    ```

    The **SYSCTL** resets, and the terminal is logged off the system. The LEDs go off on the User Panel and **SYSCTL**.

24. Was response correct?

    If **YES**, proceed to **Step 27**.
    If **NO**, continue with **Step 25**.

25. Wait approximately 5 minutes for the network to stabilize, exit **`term`**, then repeat this procedure from **Step 14**. If the second attempt to download software fails, do **Trouble Clearing: TAP-116**. You may have to go to the remote site.

26. **STOP. YOU HAVE COMPLETED THIS PROCEDURE.**

27. Wait approximately 5 minutes then verify communications can be reestablished with far-end shelf using **`rtrv-map-network:`** command. Verify that *`Comm. Status`* is good (not *`FAILED`*) as indicated by a blank in the report.

28. Is communication status good between local and remote shelf?

    If **YES**, proceed to **Step 31**.
    If **NO**, continue with **Step 29**.

29. Dispatch technician to remote site and perform local software download procedures.

    Reference: **DLP-532**

30. **STOP. YOU HAVE COMPLETED THIS PROCEDURE.**

31. Use **`rlgn:`**`tid` command to remotely login to far-end shelf.

    Reference: **DLP-522**

32. **NOTE:**
    If a dormant copy was loaded into the far-end shelf and its release version is different than the currently executing version, a status alarm message of *`dormant/exec code mismatch`* will appear in the **`rtrv-alm:`** report.

    Use **`rtrv-alm:`** command at far-end shelf to check for alarm status message of *`dormant/exec code mismatch`*.

33. Does alarm report indicate *`dormant/exec code mismatch`*?

    If **YES**, continue with **Step 34**.
    If **NO**, **STOP. YOU HAVE COMPLETED THIS PROCEDURE.**

34. **NOTE:**
The software you downloaded has been loaded as a dormant copy in this shelf. The original software is still the executing software. The **`apply:`** command must be used at this shelf to install the dormant copy of software as an executing copy. When the **`apply:`** command is executed during an upgrade from Release 3.1 or later, if you do not specify a **`time`** and **`date`** parameter, there is a default 15-minute delay before the dormant copy installation begins. Once the installation begins, the dormant copy is installed in approximately 10 minutes.

See the Commands and Reports section of Volume 1 of this manual for a description of the **`apply:`** command. The **`apply:`** command allows you to coordinate the software download across the network.

Are you going to use the **`apply:`** command at this time to load dormant version of software?

If **YES**, continue with **Step 35**.
If **NO**, **STOP. YOU HAVE COMPLETED THIS PROCEDURE.**

35. Use the **`rlgn:`**`tid` command to login again to the remote shelf, then execute the **`apply:`** command.

Response: At the local shelf, a "**P**" appears in the **FE ID** display when the installation begins.
The **SYSCTL** resets after the software is installed.
LEDs and **FE ID** display go off on **SYSCTL** and User Panel.
The remote login session is terminated.
After approximately 10 minutes, you can remote login again to the remote shelf.

36. Was response correct?

If **YES**, **STOP. YOU HAVE COMPLETED THIS PROCEDURE.**
If **NO**, continue with **Step 37**.

37. Dispatch technician to remote site to perform trouble clearing procedures and/or install software locally using the procedures of **DLP-536**.

38. **STOP. YOU HAVE COMPLETED THIS PROCEDURE.**

Condition T1EXT Circuit Pack/Port for New T1 Service

1. **CAUTION:**
   When using the **T1EXT** *circuit pack, primary lightning protection and a lightning protection shelf must be used.*

   NOTE:
   The commands **`rtrv-alm`** and **`rtrv-state`** may be used to check for alarms, locks, loops, and switches.

   NOTE:
   If line code (lc) parameters have been previously set using the **`set-t1:`** command, the circuit pack line code switch settings will have no effect. There will be no indication of improper switch settings until you try to establish service. It is recommended that a policy be established to set line coding either using the switches or using CIT commands. Use the **`rtrv-t1:`** command to check line code settings.

   Use **`rtrv-alm`** command to verify that no alarms, locks, loops, or switches are present.

2. Is a new **T1EXT** circuit pack being installed?

   If **YES**, proceed to **Step 5**.
   If **NO**, continue with **Step 3**.

3. **CAUTION:**
   To minimize hits on in-service ports on the **T1EXT** *circuit pack having a T1 port added, it is recommended to either use a CIT to manually switch the T1 to protection if the* **T1EXT** *circuit pack must be removed, or use the CIT to set T1 port options without removing the circuit pack.*

   CAUTION:
   Removing a service **T1EXT** *circuit pack that does not have an associated protection* **T1EXT** *circuit pack installed will interrupt service on all T1 ports on that circuit pack.*

   Use **`set-t1:`** command to set **T1EXT** port options.

4. **STOP. YOU HAVE COMPLETED THIS PROCEDURE.**

5. Set option switches and install new **T1EXT** circuit pack.

   Reference: **DLP-507**

6. **STOP. YOU HAVE COMPLETED THIS PROCEDURE.**

Install BBG8/BBG8B SYSCTL
New Shelf

1. **NOTE:**
   This procedure is used for installing the **SYSCTL** in a new shelf for the first time (initial shelf turnup). For procedures to replace an in-service **SYSCTL**, refer to **DLP-501**.

   Set all **SYSCTL** switch **S1** sections **S1-1**, **S1-2**, and **S1-3** to **OFF**, to set the product (shelf) type. See Figure 1.

2. Set **SYSCTL** switch **S2** sections **S2-1** and **S2-2** to **OFF** and switch sections **S2-3**, **S2-4**, **S2-5**, **S2-6**, **S2-7**, and **S2-8** to **ON**.

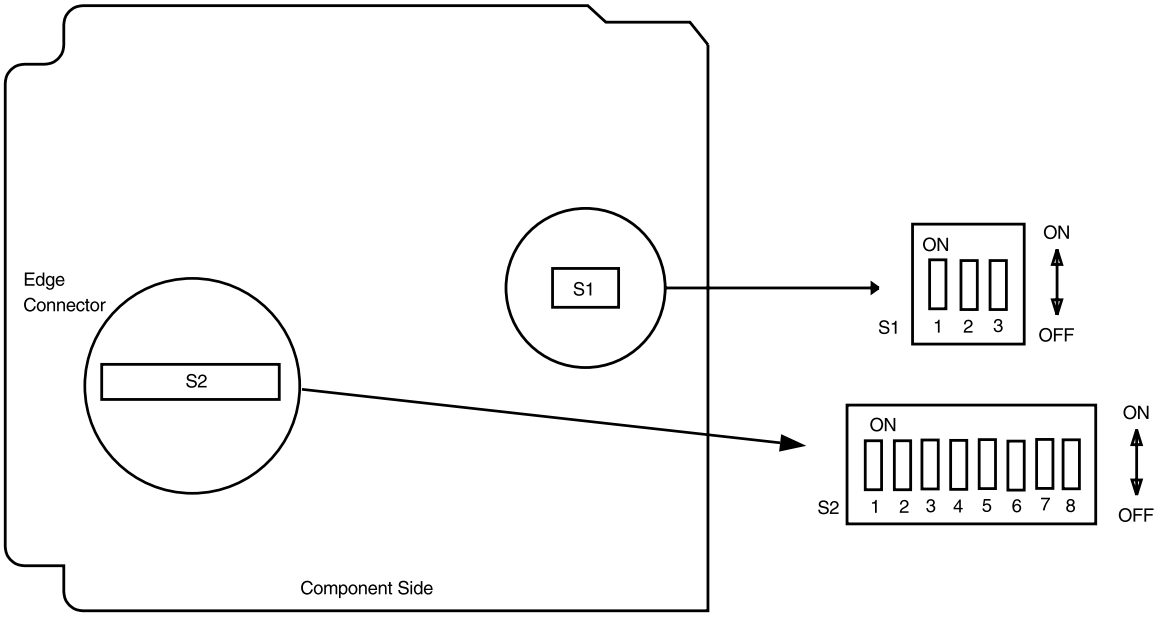

Figure 1 – SYSCTL Option Settings

3. **NOTE:**
   Steps 4 and **5** must be performed without unnecessary delays. Familiarize yourself with these steps before continuing with the procedure.

   Read Steps 4 and 5 before proceeding.

4. **CAUTION:**
   Take care to avoid damaging the LEDs that protrude through the opening in the faceplate of the **SYSCTL***.*

   NOTE:
   The **UPD/INIT** pushbutton on the **SYSCTL** is recessed to prevent its accidental operation. You will need a small pointed object such as a ballpoint pen to operate it.

   NOTE:
   Ignore the **MJ**, **MN**, and **NE ACTY** LEDs on the User Panel.

   Read the remainder of this step and Step 5 before installing the SYSCTL, then seat the **SYSCTL**.

   If the following responses do not occur, proceed to **Step 6**.

   Response: **FAULT** LED on **BBG8/BBG8B SYSCTL** lights and **ABN** LED on the User Panel lights after approximately 5 seconds. **MJ** and **NE** LEDs may light or flash briefly. **FAULT** LED on the **SYSCTL** goes off after approximately 5 seconds. **ABN** LED goes off after approximately 15 seconds. Approximately 1 minute and 30 seconds after the **ABN** LED goes off and the **CR** LED on the User Panel begins to flash.

5. Momentarily depress the **UPD/INIT** button on the **SYSCTL** while the **CR** LED is flashing (you have **10 SECONDS** to do this).

   If the following responses do not occur, continue with **Step 6**.

   Response: **CR** LED on the User Panel stops flashing when the **UPD/INIT** button is pressed.

   ABN LED on the User Panel are lighted after approximately 15 seconds. **ABN** LED goes off after approximately 30 seconds. Approximately 1 minute and 45 seconds after the **ABN** LED goes off, the **CR** LED on the User Panel flashs again. **DO NOT** depress **UPD/INIT** pushbutton again when the **CR** alarm LED flashes.

   Initialization may take 2-3 minutes.

6. Observe one of the following indications in the **FE ID** display. Note the indication and follow suggested procedure:

   - Nothing displayed in the **FE ID** display indicates that compatible software is installed in the **SYSCTL**.

     Proceed to **Step 9**.

   - The letter "**P**"displayed in the **FE ID** display indicates that no software is installed in the **SYSCTL**. If the "**P**" is followed by a period "**P.**", it means that a previous download attempt has failed and a new software download will have to be attempted either locally or remotely using the **`ins-prog:`**`tid` or **`cpy-prog:`**`tid` command. If there is no period "**P**" the software can only be downloaded locally.

     Continue with **Step 7**.

   - The letter "**U**" displayed in the **FE ID** display indicates that **SYSCTL** Switch **S1** is not set properly for type of shelf being equipped.

     Remove **SYSCTL** and repeat this procedure from **Step 1**.

   - The letter "**E**" displayed in the **FE ID** display indicates that the **SYSCTL** must be replaced.

     Get replacement **SYSCTL** and repeat this procedure from **Step 1**.

- The letter "**F**" displayed in the **FE ID** display indicates that the **SYSCTL** faceplate latch is not fully latched.

  Unplug the **SYSCTL** and repeat this procedure from **Step 3**. Ensure you properly seat the faceplate latch when you seat the **SYSCTL**.

- A flashing letter "**L**"displayed in the **FE ID** display indicates a low voltage condition (brownout) on the shelf.

  Use **TAP-119** to clear brownout condition.

7. Find circuit packs with compatible software and repeat this procedure, or install new software using the procedures of **DLP-525**.

8. **STOP. YOU HAVE COMPLETED THIS PROCEDURE**.

9. Retrieve generic software version ID by depressing the **ACO** button longer than 2 seconds and observing version code on the **FE ID** display.

10. Is proper software version installed?

    If **YES**, **STOP. YOU HAVE COMPLETED THIS PROCEDURE**.
    If **NO**, continue with **Step 11**.

11. Find circuit packs with the correct software and repeat this procedure or install new software using the procedures of **DLP-525**.

12. **STOP. YOU HAVE COMPLETED THIS PROCEDURE**.

Install HDSL Circuit Packs

1. **CAUTION:**
In addition to primary lightning protection, an external Lightning and Surge Secondary Protection Assembly (ED-8C783-30 or equivalent) is required for **HDSL** *circuits packs used in outside plant applications.*

NOTE:
Take care to avoid damaging the LEDs that protrude through the opening in the faceplate of the **HDSL** circuit pack.

NOTE:
To set switch to **ON**, depress rocker or slide switch toward side labeled **ON** in the figure. To set switch to **OFF**, depress rocker or slide switch toward side labeled **OFF** in the figure.

Refer to Figure 1 and Table A and set option switches.

Table A – HDSL Control Switch Settings

Control Settings	Switch S1 Settings			
	S1-1	S1-2	S1-3	S1-4
Master	—	OFF	—	OFF
Slave	—	ON	—	ON
Local	OFF	—	OFF	—
Remote	ON	—	ON	—

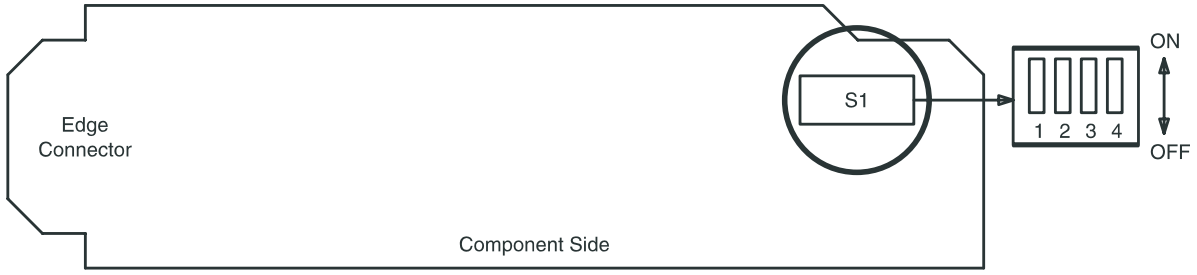

Figure 1 – HDSL Control Switch

2. **NOTE:**
   A maximum of three **BBF8 HDSL** circuit packs, including a protection circuit pack, can be installed in one FiberReach if **28-Type** or **29-Type OLIUs** are used.

   Seat **BBF8 HDSL** circuit pack in required slot of **LOW SPEED** group being equipped.

   Response: **FAULT** LED on **HDSL** circuit pack lights and may remain lighted for about 40 seconds and then goes off.

3. Repeat this procedure from **Step 1** for each service **HDSL** circuit pack being installed.

4. **NOTE:**
   One protection **HDSL** circuit pack may be installed in slot **8(P)** of each **LOW SPEED** group being equipped.

   If required, refer to Figure 1 and Table A, and set option switches on protection **HDSL** circuit pack.

5. If required, install protection **HDSL** circuit pack into slot **8(P)** of low-speed group being equipped.

6. Install **177A** Retainer Cards into all unequipped service DS1 **LOW SPEED** slots.

7. **STOP. YOU HAVE COMPLETED THIS PROCEDURE.**

Obtain Equipment, Check Software, Prepare and Connect PC for Software Download

1. **NOTE:**
   The PC may be connected to the front CIT port or remotely through a dial-up modem. If connected to the rear CIT port, a null modem is required between the RS- 232 cable and the rear **CIT** port.

   Obtain the following equipment:

   A. IBM compatible personal computer (PC) running an MS-DOS computer program operating system, Release 2.1 or later.

   B. RS-232 cable to connect PC **COM** port to User panel **CIT** port.

   C. Working copies of the new system generic program diskette(s).

   D. Software Release Description for software being installed.

2. Before beginning the software installation procedure, the following is strongly suggested:

   A. Become familiar with the characteristics and operating procedures of your PC and the MS-DOS operating system.

      Reference: **DLP-533**

   B. Operate laptop PCs on AC power during download procedures.

   C. Follow proper procedures in handling the diskette(s) (floppies).

      Reference: **DLP-533**

   D. Make working copies and backup copies of the original new generic program diskettes.

      Reference: **DLP-534**

   E. **Read the Software Release Description for software being installed**.

3. Before beginning the software installation, refer to the Software Release Description for the software being installed for a description of any special considerations required when installing this version of the software.

4. **NOTE:**
   If you are using a PC operating in a *Windows* environment, you must **exit** *Windows* and restart your PC in *MS-DOS* mode before performing these download procedures. For example, if your PC is running Windows 95 you must exit *Windows* by clicking on the **Start** button, then **Shut Down**, then **Restart the computer in** *MS-DOS* **mode**.

   Start MS-DOS operating system on the PC [**DLP-534**].

   Response: PC displays the prompt (for example, `C>`, `C:\DOS>`) determined by the PC.

5. If you are going to use the PC hard disk to load software to the shelf, copy all files on the source diskettes(s) (floppies) to a directory on the hard disk (for example, GEN_401 for generic version 4.0.1).

6. If you are going to load the software from the hard disk, use the `cd` command to change to the appropriate hard drive directory containing the software.

   If you are going to load the software from the floppies, use the appropriate *MS-DOS* command (for example, **`a:`** or **b:**) to go to the drive where the floppy disk will be installed.

   Response: PC displays the appropriate prompt (`A>`, `B>`, `C>`, `C:\DOS>`, etc.) determined by the PC.

   Comment: If you are using floppies and get a disk error message, verify the drive latch is locked and that you have the proper diskette installed in the drive.

7. **NOTE:**
   The new generic program may be on many floppy disks. If you are using the floppy disks, the PC will prompt you to insert disks as needed after the first disk is installed.

   If you are using the floppy disks, insert the first (number 1) floppy disk into the PC drive.

8. **NOTE:**
The **`checkpgm`** command may take up to 25 minutes to complete.

Execute the **`checkpgm`** command to check the version number of the program you are installing. If using floppy disks, insert each diskette when prompted.

approx. 15 min. if using hard drive
approx. 25 min. if using floppy drive

Response: `PC has DDM-2000 program version a.b.c`.

9. **NOTE:**
The cable from the front **CIT** port on the DDM-2000 must be connected to the **COM** (**COM1 or COM2**) RS-232 port of the PC.

Connect PC to **CIT** port by connecting one end of an RS-232 cable to the **COM( )** port of the PC and the other end of the cable to the front DDM-2000 **CIT** port.

10. **STOP. YOU HAVE COMPLETED THIS PROCEDURE**.

Rear Access to the Wall DT Cabinet

1. Remove the four attachment screws from the front of the Wall DT as show in Figure 1.

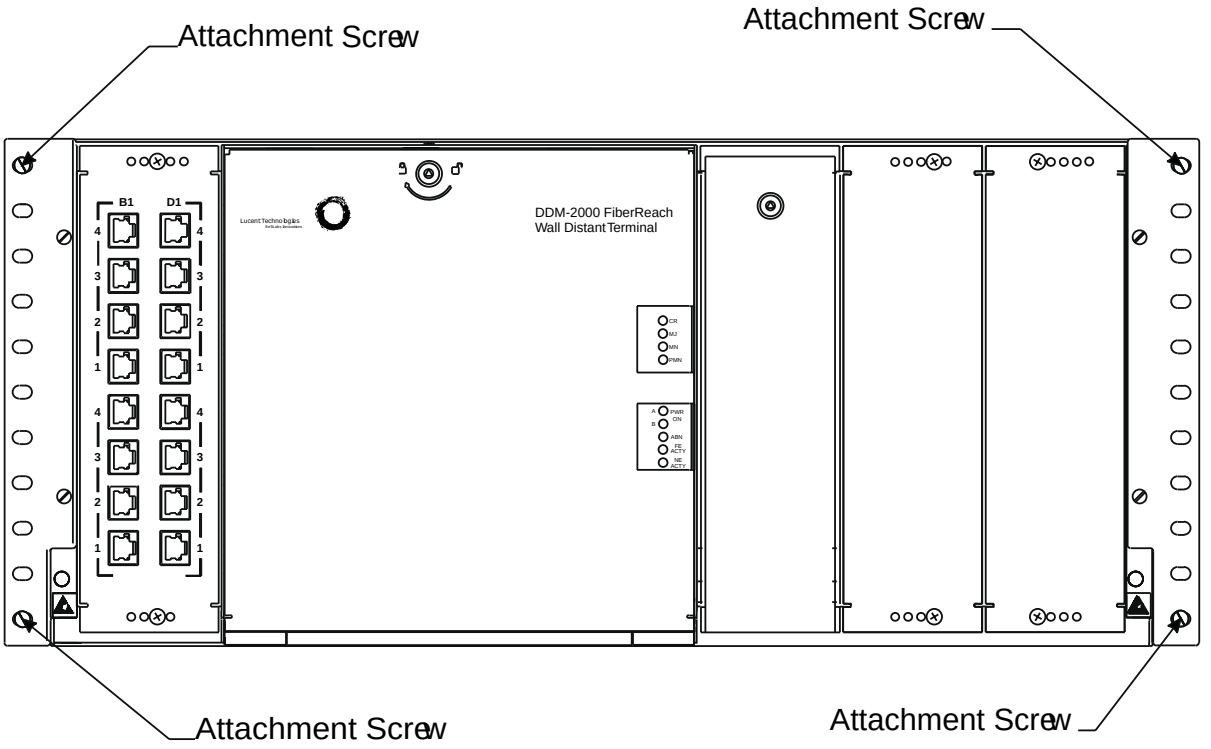

Figure 1. Wall DT Cabinet — Front View

2. With both hands on the bottom of the Wall DT, carefully lift up on the Wall DT so the pivot point leaves the service position, and slide the Wall DT forward until the pivot point reaches the rotation position. Allow the pivot point to drop down into the rotation position, and rotate the Wall DT 90 degrees until the backplane is in the up position (see Figure 2).

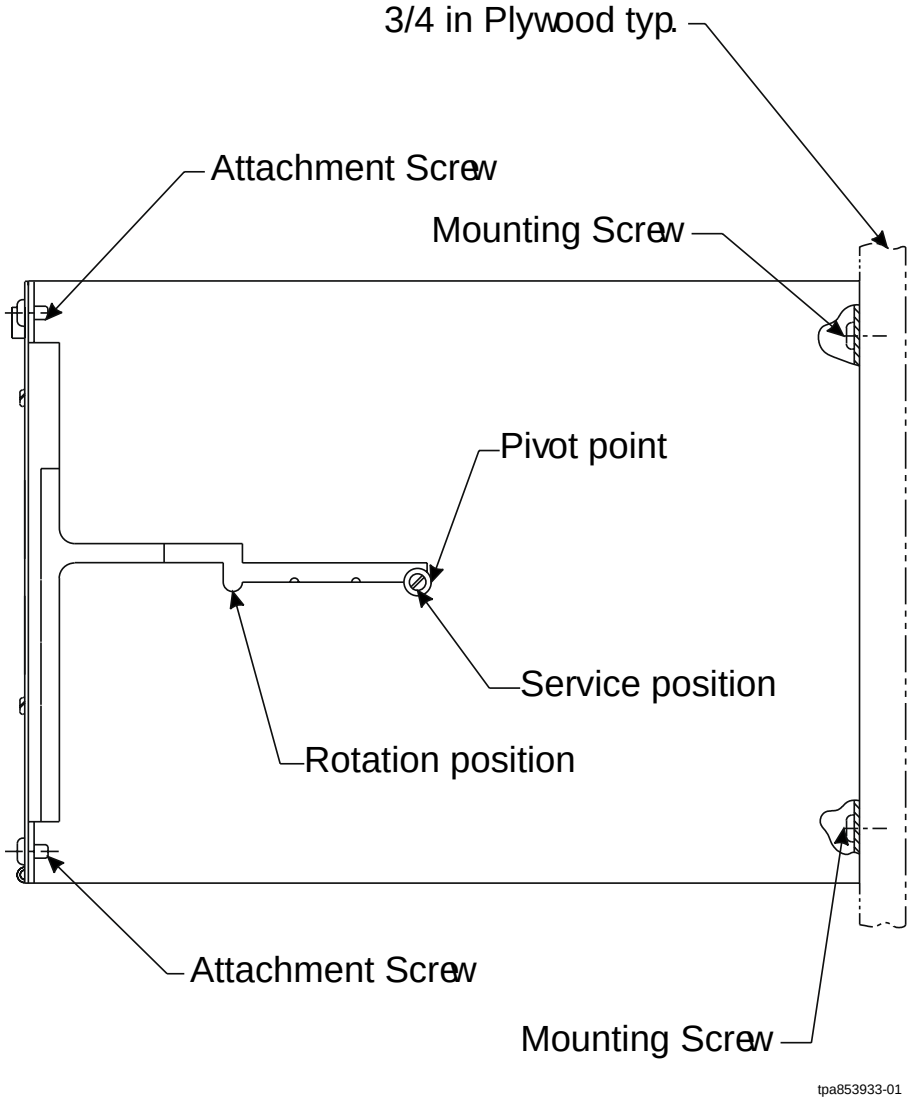

Figure 2. Wall DT Cabinet — Bottom View

3. **NOTE:**
   Make sure that there are no circuit packs stored lose in the shelf, and that all operating circuit packs are securely latched in position.

   NOTE:
   Never leave the Wall DT unattended in the rotated position. Always return it to the service position and reinstall at least the top attachment screws.

   NOTE:
   When ever sliding or rotating the Wall DT make sure that both the optical fiber and DS1 cabling are not crimped or stressed in any way.

   Carefully rotate the Wall DT 90 degrees until the Wall DT is in the normal position. With both hands on the bottom of the Wall DT, carefully lift up on the Wall DT so the pivot point leaves the rotation position, and slide the Wall DT back until the pivot point reaches the service position. Allow the pivot point to drop down into the service position (see Figure 2).

4. **NOTE:**
   When ever sliding or rotating the Wall DT make sure that both the optical fiber and DS1 cabling are not crimped or stressed in any way.

   Reinstall the four attachment screws that were removed from the front of the Wall DT in **Step 1**.

5. **STOP. YOU HAVE COMPLETED THIS PROCEDURE.**

Out Of Service Upgrade From 26-Type to 28-Type or 29-Type OLIU Circuit Packs

1. **CAUTION:**
This procedure requires a complete initialization of the system. All software settable features will need to be reentered. If office records are not available, all the settings listed [**DLP-511**] *will need to be recorded, so the settings can be reentered at the end of this procedure. The cross-connections will most probably change. The new cross-connections must be available from the provisioning center.*

WARNING:
Unterminated optical connectors may emit invisible laser radiation. Avoid direct exposure to the beam. Do not view beam with optical instruments. Use of controls or adjustments or performance of procedures other than those specified herein may result in hazardous radiation exposure.

CAUTION:
Before installing **28/29-Type OLIU***s, ensure all optical fiber connectors and couplings have been properly cleaned* **[DLP-527]***. Signal performance may be degraded if the connectors and couplings are not cleaned properly.*

CAUTION:
If optical fiber cables are routed beneath the **OLIU***s, be careful not to pinch or crush the fibers when the* **OLIU***s are inserted.*

NOTE:
The DDM-2000 FiberReach shelf operating at an OC-3 rate requires **28-Type OLIU**s in the **MAIN** slots. The DDM-2000 FiberReach shelf operating at an OC-12 rate requires **29-Type OLIU**s in the **MAIN** slots. Two **OLIU**s are required.

NOTE:
The red **FAULT** LED flashes when no signal is present to the **OLIU**s.

NOTE:
The **28-Type** and **29-Type OLIUs** require a faceplate interconnect cable assembly, [comcode (847721271)].

NOTE:
When using the following procedures to install the **28/29-Type OLIU**s, if the responses are not correct, check all connections. If connections are correct, replace the **28/29-Type OLIU** that has the wrong response.

Remove all **DS1/T1** and **DS3/T3** signals from system [**NTP-005**, **NTP-026**].

2. Use the **`upd`** command to reflect the change and clear associated alarms.

3. Use the **`dlt-crs-vt1`**/**`dlt-crs-sts1`** commands to delete all cross-connections.

4. Remove all circuit packs from the FiberReach shelf, except the **SYSCTL** circuit pack.

5. Use the **`upd`** command to delete the circuit packs removed from the equipment list and clear associated alarms.

6. Use the **`init-sys:all`** command to initialize provisionable parameters to their default values.

7. **NOTE:**
When a **28/29-Type OLIU** is installed, an `OLIU connector failed` alarm will occur. Normally, the alarm occurs because the faceplate connector (ribbon cable) is not yet installed.

   Install **OLIU** into required **MAIN-1** slot.

   Response: **FAULT** LED and **ACTIVE** LED lights. **FAULT** LED begins flashing after about 10 seconds.

   28/29-Type OLIU [**MN** LED (`inc. OC3/OC12 LOS`) and **NE ACTY** LED (`holdover mode active`) alarms light.]

8. Install universal **LBO** on **MAIN-1 OLIU** [**DLP-503**].

9. Connect optical cables to **MAIN-1 OLIU**.

   Response: **FAULT** LED on **OLIU** goes out.

10. Install second **OLIU** into **MAIN-2** slot. The FiberReach requires two **OLIU**s for operation.

    Response: **FAULT** LED and **ACTIVE** LED lights.

    28-Type OLIU FAULT LED begins to flash after about 10 seconds. (The **FAULT** LED may go off for a few seconds before starting to flash.) **MN** LED (`inc. OC3 LOS` and `OLIU connector failed`) alarm lights.

    29-Type OLIU FAULT LED lights and stays on. **MN** LED (`OLIU CP failed` and `OLIU connector failed`) alarm lights.

11. Install universal **LBO** on **MAIN-2 OLIU** [**DLP-503**].

12. Connect optical cables to **MAIN-2 OLIU**.

    Response: **28-Type OLIU FAULT** LED goes out.

    29-Type OLIU FAULT LED remains lit (solid).

13. Connect the faceplate connector (ribbon cable) (Figure 1) between **28/29-Type OLIU**s in the **MAIN-1** and **MAIN-2** slots.

    Response: **28-Type OLIU** [**MN** LED (`OLIU connector failed`) alarm will clear.]

    29-Type OLIU FAULT LED on **OLIU** goes out. **MN** LED (`OLIU connector failed` and `OLIU CP failed`) alarm will clear.

14. Verify that the connectors on the faceplate connector are properly seated and latched.

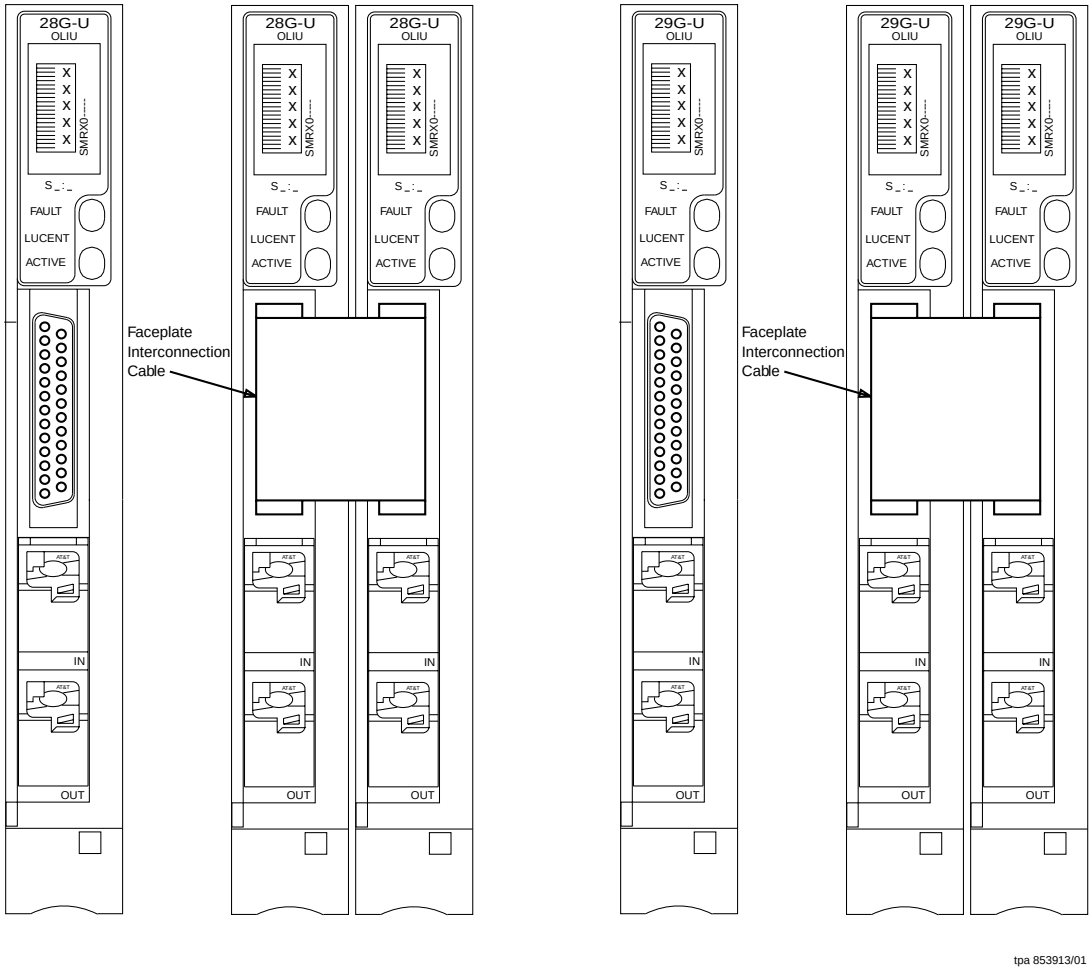

Figure 1. 28-Type and 29-Type OLIU Circuit Pack — 28-Type and 29-Type OLIU Pair with Faceplate Interconnect Cable Assembly [comcode (847721271)]

15. Reinsert the Low Speed circuit packs.

16. Reenter Software Settable features [**DLP-512**].

17. **STOP. YOU HAVE COMPLETED THIS PROCEDURE.**

Provision STS-1 Path Trace

1. **NOTE:**
   This procedure is used to provision the transmit and receive path trace fields of an STS cross-connected STS-1 signal. Path trace is only applicable to STS paths terminating to a **BBG4B DS3** circuit pack because it is an STS-1 terminating device. This procedure can be performed from any network element in a DDM-2000 OC-3 or OC-12 network. See the "Commands and Reports" section of this User/Service Manual for additional information on the **`set-trace-sts1`** and **`rtrv-trace-sts1`** commands.

   If required, condition the CIT and connect it to the local DDM-2000 network element.

   Reference: **DLP-521**

2. From office records, determine which DDM-2000 OC-3 or OC-12 network elements are the source and destination terminating network elements for the STS-1 path(s) to be traced.

3. **NOTE:**
   When performing this test, one DDM-2000 terminating shelf will be referred to as the near end and the other terminating shelf as the far end. These designations are arbitrary; either shelf can be the near end or far end.

   Establish a login to the near-end terminating shelf.

4. Use the command **`rtrv-crs-sts1`** to determine the address of the STS-1 drop at each terminating location.

5. **NOTE:**
   The path trace string may be up to 62 characters long. The transmit (*trc*) and receive (*exptrc*) strings should be different within the same location; however, the *exptrc* from one location must identically match the *trc* at the other location.

NOTE:
Trace strings are case sensitive. Be sure to match capticals and lower case entries in the trace (*trc*) message at the near end with the expected trace (*exptrc*) message at the far end.

From office records, determine the path trace character string for each STS-1 path to be traced (path is between the source and destination network elements

6. Use **`set-trace-sts1:`***address***`:exptrc=`***ExpectedIncomingPathTrace*, **`trc=`***OutgoingPathTrace* command to provision the near-end Expected Incomng Path Trace (*exptrc*) string and near-end Outgoing Path Trace (*trc*) string.

7. Establish remote login to the far-end STS-1 terminating network element.

   Reference: **DLP-522**

8. Use **`set-trace-sts1:`***address***`:exptrc=`***ExpectedIncomingPathTrace*, **`trc=`***OutgoingPathTrace* command at the far end to provision the Expected Incoming Path Trace (*exptrc*) string the same as you did for the *trc* string at the near end terminating element. Provision the Outgoing Path Trace (*trc*) string the same as you did for the *exptrc* string at the near-end terminating element.

9. Use **`rtrv-trace-sts1:`***address* command to retrieve the provisioned transmit and receive path trace string for the STS-1 channel being tested.

10. Did the `STS-1 Path Trace Report` indicate `Status: GOOD`?

    If **YES**, proceed to **Step 14**.
    If **NO**, continue with **Step 11**.

11. Did the `STS-1 Path Trace Report` indicate `Status: MISMATCH`?

    If **YES**, proceed to **Step 13**.
    If **NO**, continue with **Step 12**.

12. Indications are that there is no incoming path trace message (`Status: UNAVAILABLE`). Verify that both terminating nodes are using **BBG4B DS3** circuit packs. Verify cross connections and terminating addresses at all nodes. Repeat this test from **Step 9**.

13. Indications are that the Incoming Path Trace string message (`INCTRC`) does not match the Expected Path Trace string message (`EXPTRC`) - (`Status: MISMATCH`). Verify that the path string entered as the Expected Incoming Path Trace (`EXPTRC`) at this node matches exactly the Outgoing Path Trace string (`TRC`) entered at the other terminating node circuit packs. Verify cross connections and terminating addresses at all nodes. Repeat this test from Step 9.

14. Has the **`rtrv-trace-sts1:`**address command been performed at both terminating ends?

    If **YES**, **STOP. YOU HAVE COMPLETED THIS PROCEDURE**.
    If **NO**, continue with **Step 15**.

15. Log out of remote location. Repeat this test from **Step 9** for the other terminating end.

Perform DS3 Transmission Test

1. **NOTE:**
This procedure may be used to perform DS3 transmission tests in the *mux* (toward the fiber) or *demux* (toward the DSX) direction. When this procedure is being used to perform end-to-end DS3 tests, it is assumed that the complete end-to-end system has already been tested and that only a particular DS3 channel is being tested at this time. Transmission tests in the *mux* direction may be local or end-to-end tests (See Figure 1). Transmission tests in the *demux* direction are local cross-connect tests User/Service Manual, under TEST-TRMSN-T3, gives an explanation of commands.

NOTE:
This test can be performed either with a CIT and the automated test command **`test-trmsn-t3`** or with a DS3 test set or M13 test set.

NOTE:
When this procedure is used to do end-to-end tests, one DDM-2000 shelf will be referred to as the near end and the other shelf as the far end. These designations are arbitrary; either shelf can be the near-end or the far-end shelf.

NOTE:
Proper cross-connections must be made at each shelf to establish the complete end-to-end path for the DS3 circuit being tested. Release 3.0 has no default cross-connections and supports only manual VT1.5 cross-connections. Release 3.1 and later has no default cross-connections and supports only manual VT1.5 and STS-1 cross-connections. See the description of the following commands in the "Commands and Reports" section of this User/Service Manual: **`dlt-crs-vt1`**, **`dlt-crs-sts1`**, **`ent-crs-vt1`**, **`ent-crs-sts1`**, **`rtrv-crs-vt1`**, **`rtrv-crs-sts1`**, **`set-ne`**, and **`rtrv-ne`**. See *Cross-Connection Provisioning* in the "Administration and Provisioning" section of this User/Service Manual for more information on cross-connection provisioning.

NOTE:
A CIT is required to make cross-connections for this test.

Is a CIT available?.

If **YES,** continue with **Step 2**.
If **NO**, proceed to **Step 3**.

2. **NOTE:**
   If one terminating end is equipped with **STS1E** circuit packs to provide EC-1 service and the other terminating end is equipped with **DS3** circuit packs, the DS3 transmission test is performed from the DS3 terminating end. If the CIT and **`test-trmsn-t3:`** command is being used to perform the test and you are at the EC-1 terminating end, log into the DS3 end to perform the test using the **`test-trmsn-t3:`** command.

   At the near-end **DDM-2000**, connect the CIT to the **CIT** jack on the User Panel, if required.

   Reference: **DLP-521**

3. **NOTE:**
   Work orders, office records, or CIT **`ent-crs-sts1`** or **`rtrv-crs-sts1`** commands may be used to make or verify STS-1 cross connections.

   At each shelf in the network, make/verify that proper STS-1 cross connections have been made for each DS3 channel being tested

4. Are you using CIT and **`test-trmsn-t3`** command to perform this test?.

   If **YES**, continue with **Step 5**.
   If **NO**, proceed to **Step 21**.

5. See Figure 1. If local tests are being performed, the fiber loopbacks at the near-end **OLIU**s must be in place. If end-to-end tests are being performed, do ONE of the following:

   a. **NOTE:**
      When an end-to-end DS3 test is run in the mux direction and an external loopback is established at the far end, provision the far end DS3 for CC mode with no AIS (**`set-t3:`***`address`***`:mode=cc,ais-no`**). Otherwise, if the VMR mode is used, then only errors in the receive direction will be monitored and the system may not recognize that a loopback is up.

      Connect a patch cord from the **OUT** jack to the **IN** jack at the far-end DSX-3, STSX cross-connection associated with the DS3 channel to be tested.

   b. Use the **`rlgn`** command to log in to the far-end shelf and use the **`opr-lpbk-t3:`***`address`* or **`opr-lpbk-ec1:`***`address`* command to loop back the DS3 or EC-1 port(s) at the far end. Use **`logout`** or **`toggle`** (ctrl t) command to return control of CIT to near end.

6. Are you doing this test in the mux or demux direction?

   If **MUX** direction, continue with **Step 7**.

   If **DEMUX** direction, proceed to **Step 9**.

7. At the near end, use the following command to perform a test of the DS3 loop in the fiber direction: **`test-trmsn-t3:`***`address`***`:dirn=mux:dur=( );`**

   Where *address* = address identifier of the DS3 signal.

   dirn = direction of the test. If **`dirn=mux`**, direction is toward fiber.

   dur = duration of the test in minutes (1-120); default is 1.

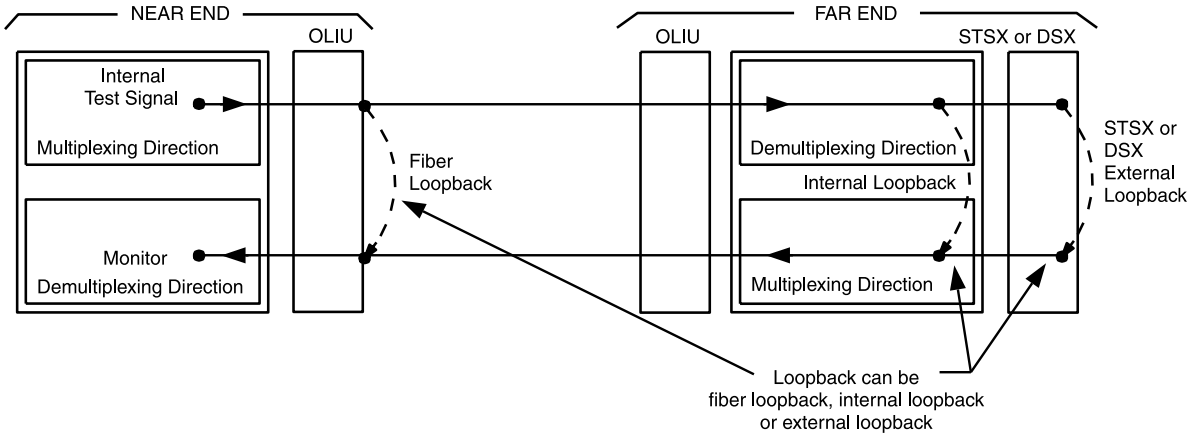

Figure 1. Transmission Test of DS3 Signal in MUX Direction

8. Was the test successful (error free)?

   If **YES**, proceed to **Step 12**.
   If **NO**, proceed to **Step 34**.

9. See Figure 2. At the near-end DSX-3 cross connection associated with the DDM-2000 being tested, connect a patch cord from the **OUT** jack to the **IN** jack for the DS3 channel to be tested.

10. Use the following command to perform a DS3 transmission test in the demux direction to test the DS3 loop in the DSX direction:
    `test-trmsn-t3:`*`address`***`:dirn=demux:dur=(  );`**

    Where *`address`* = address identifier of the DS3 signal.

    dirn = direction of the test. If **`dirn=demux`**, direction is toward fiber.

    dur = duration of the test in minutes (1-120); default is 1.

11. Was the test successful (error free)?

    If **YES**, continue with **Step 12**.
    If **NO**, proceed to **Step 34**.

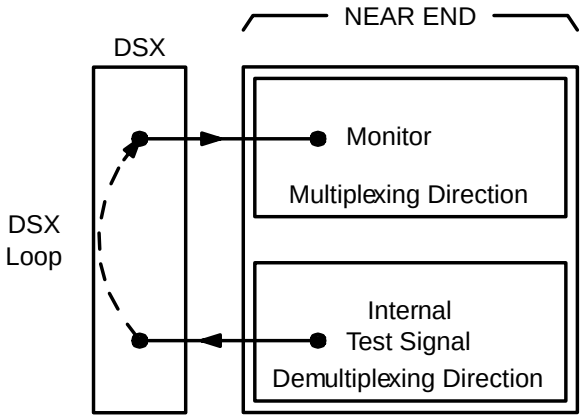

Figure 2. Transmission Test of DS3 Signal in DEMUX Direction

12. Is this the first service being placed on the group and is a protection DS3 circuit pack installed?

    If **YES**, continue with **Step 13**.
    If **NO**, proceed to **Step 17**.

13. Use the following command to switch from service to protection circuit pack:**`switch-fn:`***address***`:pri=manual`**;.

    Response: The green **ACTIVE** LED lights on the protection circuit pack.

14. **NOTE:**
    If this is a single-ring configuration and the transmission test is being performed in the **mux** direction, the **`switch-path`** command should be used to switch the path to the other ring and then repeat this test.

    Repeat the transmission test in the mux (or demux) direction using the following command: **`test-trmsn-t3:`***address***`:dirn=mux`** (or **`demux):dur=(  );`**).

15. Was the test successful (error free)?

    If **YES**, continue with **Step 16**.
    If **NO**, proceed to **Step 34**.

16. Use the following command to clear active switch requests: **`switch-fn:`***address***`:pri=reset;`**.

17. The DS3 circuit under test has passed the DS3 transmission test. Remove the looping patch cords from the cross-connect point. Use the **`rls-lpbk-t3`** command to release loopback(s) at the far end; if required.

18. At the near end (and the far end) DDM-2000, momentarily depress the **UPD/INIT** pushbutton (or use the **`upd`** command) on the **SYSCTL** to update the **SYSCTL**.

19. If violation monitor removal mode was set differently than the original mode in **Step 5**, reprovision the mode to the original or required setting using the **`set-t3`** command. Repeat this procedure from the **Step 2** for any additional DS3 circuits to be tested.

20. **STOP. YOU HAVE COMPLETED THIS PROCEDURE**.

21. See Figure 1. If local tests are being performed, the fiber loopback at the near-end **OLIU** must be in place. If end-to-end tests are being performed, at DSX-3 to STSX cross-connect point associated with the DDM-2000 being tested, connect a patch cord from the **OUT** jack to the **IN** jack for the DS3 channel to be tested.

22. **NOTE:**
    The DS3 test set is used at the end equipped with **DS3** circuit packs

    At the cross-connection associated with the near-end DDM-2000, connect the DS3 test set to the **IN** and **OUT** jacks associated with the circuit under test.

23. Use the DS3 test set to test for error-free transmission.

24. Was the test successful (error free)?

    If **YES**, continue with **Step 25**

    If **NO**, proceed to **Step 34**.

25. Is this the first service being placed on the group and is protection circuit pack installed?

    If **YES**, continue with **Step 26**.

    If **NO**, proceed to **Step 29**.

26. Unseat the service **DS3** circuit pack associated with the circuit under test.

27. Repeat the DS3 transmission test with the DS3 test set.

28. Was the test successful (error free)?

    If **YES**, continue with **Step 29**.

    If **NO**, proceed to **Step 34**.

29. Reseat the **DS3** circuit pack associated with the circuit under test.

30. The DS3 circuit under test has passed the DS3 transmission test. Remove the looping patch cords from the cross-connections.

31. At the near-end (and the far-end) DDM-2000, momentarily depress the **UPD/INIT** pushbutton on the **SYSCTL** (or use the **upd** command) to update the **SYSCTL**.

32. Repeat this procedure from **Step 21** for any additional DS3 circuits to be tested.

33. **STOP. YOU HAVE COMPLETED THIS PROCEDURE**.

34. Has the **DS3** circuit pack that failed been replaced?

    If **YES**, proceed to **Step 37**.
    If **NO**, continue with **Step 35**.

35. Replace the DS3 circuit pack that failed the test.

    Reference: **DLP-523**

36. Repeat this procedure for the **DS3** circuit pack that failed.

37. Trouble may be in the DSX cross-connect, STS1 cross-connections in the network, or the shelf backplane. Use the **`rtrv-crs-(  )`** command to ensure proper STS1 cross-connections have been made at each shelf in the ring for the DS3 being tested. If no trouble found, check DSX cross-connect and backplane connections. If other alarms or trouble indications are present, refer to **Trouble Clearing: IXL-001** to isolate the trouble. If no alarms or indications are present and a CIT is available, use the RETRIEVE commands (for example, **`rtrv-alm`**, **`rtrv-hsty`**, etc.) to check for other trouble indications.

38. **STOP. YOU HAVE COMPLETED THIS PROCEDURE.**

Install DS3 Circuit Packs

1. **CAUTION:**
   Take care to avoid damaging the LEDs that protrude through the opening in the faceplate of the **DS3** *circuit pack.*

   NOTE:
   DS3 circuit packs are installed in Function Units Group slots, **FN-1** and **FN-2**. **BBG4/BBG4B DS3** service circuit packs are installed in slot **FN-1**. **BBG4/BBG4B DS3** protection circuit packs are installed in slot **FN-2**. **BBG19 DS3** data interface circuit packs are installed in **FN-1** and **FN-2** slots and are independent. There is no protection between the **BBG19 DS3** circuit packs.

   Determine which Function Units Group slot(s) **FN-1** and/or **FN-2** is being equipped with **DS3** circuit packs.

2. Determine from office records the length of the DS3 cabling between the DDM-2000 and the DSX-3 cross-connect point.

3. **NOTE:**
   The only hardware option settings on DS3 circuit packs are the LBO settings shown in Figure 1. If there are other jumpers on the circuit pack similar to the LBO jumpers, they are factory test points and should be ignored.

   Refer to Table A and Figure 1. Install the DS3 option jumpers per Table A.

Table A – DS3 LBO Settings

Cable Length (Ft)		
734D	**735A**	**LBO Settings**
0 to 225	0 to 125	LBO IN (ON)
>225 to 450	>125 to 250	LBO OUT

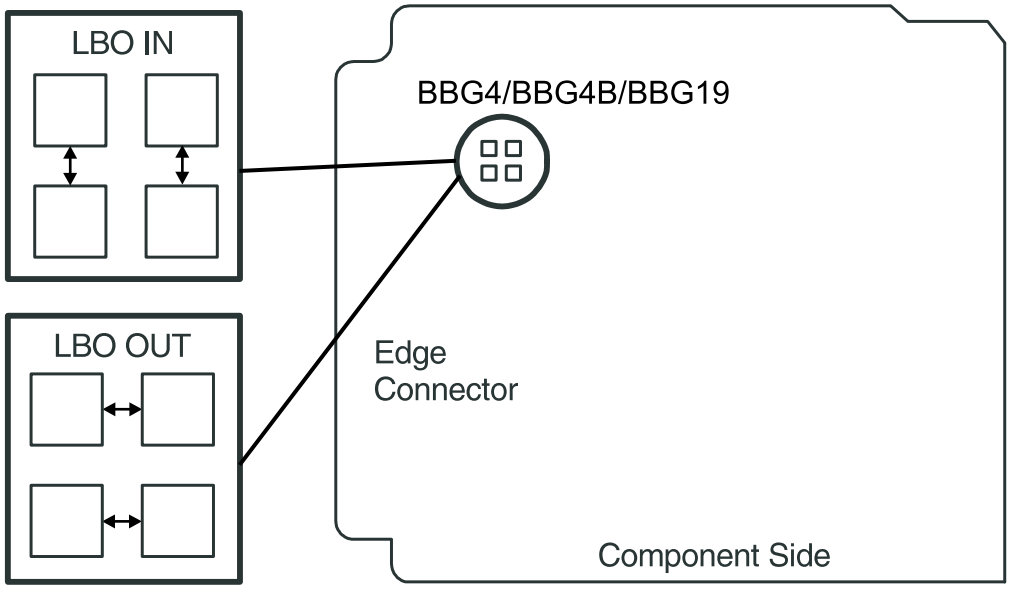

Figure 1 – BBG4/BBG4B/BBG19 DS3 LBO Settings

4. Are your installing **BBG4/BBG4B DS3** or **BBG19 DS3** circuit packs.?

   If **BBG4/BBG4B**, continue with **Step 5**.
   If **BBG19**, proceed to **Step 8**.

5. **NOTE:**
   If the response is not correct in the following procedures, replace the **DS3** circuit pack.

   Seat a **DS3** circuit pack in Function Units Group slot **FN-1**.

   Response: **FAULT** LED on the **DS3** circuit pack lights for about 20 seconds then goes off. **ACTIVE** LED lights on the first **DS3** circuit pack of the pair installed.

6. If required, seat a second (protection) **DS3** circuit pack in Function Units Group slot **FN-2**.

   Response: **FAULT** LED on the **DS3** circuit pack lights for about 20 seconds then goes off. **ACTIVE** LED remains off.

7. **STOP. YOU HAVE COMPLETED THIS PROCEDURE**.

8. **NOTE:**
   Since cross connections associated with **BBG19 DS3** circuit packs are non-path-switched locked cross connections, a **BBG19 DS3** circuit pack installed in Function Units Group slot **FN-1** at one terminating node is associated with the **BBG19 DS3** circuit pack in Function Units Group slot **FN-2** at the other terminating node.

   NOTE:
   If response is not correct in the following procedures, replace the **BBG19 DS3** circuit pack.

   Seat **BBG19 DS3** circuit packs in Function Units Group slots **FN-1** and **FN-2**.

   Response: **FAULT** LED on the **DS3** lights for about 20 seconds then goes off. **ACTIVE** LED lights on **DS3** circuit pack.

9. **STOP. YOU HAVE COMPLETED THIS PROCEDURE**.

Operation and Maintenance (TOP) Narrowband Shelf

Overview 1

TOP Section Organization 1

How to Use This TOP Section 2

- Screen Display and Panel Stamping Fonts 3
- DDM-2000 FiberReach Installation 3

Safety Instructions 4

- Product Safety Labels 4

Electrostatic Discharge (ESD) Considerations 5

General Safety Instructions 7

Installation Safety Instructions 8

Operation and Maintenance (TOP) Narrowband Shelf

Overview

This section supports operation and maintenance of the DDM-2000 FiberReach Narrowband Shelf. It includes the following five separate tabs:

- Acceptance — Yellow tab
- System Turnup/Circuit Order — Orange tab
- Operation — Green tab
- Trouble Clearing — Red tab
- Detailed Level Procedures — Blue Tab

TOP Section Organization

The **Acceptance** tab covers procedures to check the shelf or system after the shelf has been equipped or after the system has been established.

The **System Turnup/Circuit Order** tab includes procedures for the following:

a. Turn Up Narrowband Shelf Rack Mount System

b. Perform End-to-End System Test

c. Establishing initial end-to-end DS1/T1 service

d. Install and Test Channel Units

e. Upgrading software to a new release. ([Refer to *SLC*®-2000 User Service Manual 363-208-001 (NTP-074])

The **Operation** tab - There are no tasks associated with the operation of the Narrowband Shelf. All operations are performed at the Wideband Shelf. See the WIdeband procedures in this book.

The **Trouble Clearing** tab covers alarms and trouble reports.

The **Detailed Level Procedures** (DLP) tab contains all of the DLPs, beginning with DLP-500, used in this manual.

How to Use This TOP Section

To find the instructions for performing acceptance, system turnup/circuit order, operation, or trouble clearing tasks, proceed as follows:

1. Find your job in the Task Index under the appropriate colored tab and go to the referenced procedure (for example, **Acceptance IXL-001**). Or you may use the Master Task Index (**IXL-001**) in this introduction.
2. Turn to the indicated director level, detail level, or trouble-clearing procedure.

Procedures in this TOP are of three types:

a. Non-Trouble-Clearing Procedures (**NTP**) — a director level procedure that lists normal work items to perform other than trouble clearing.

b. Trouble Analysis Procedure (**TAP**) — a director level procedure that contains step-by-step trouble-clearing instructions to locate and/or fix troubles.

c. Detailed Level Procedures (**DLP**) — detailed step-by-step instructions.

All procedures in each section of this TOP are in numerical order, regardless of the type of procedure (see Table 1). Table 1, which lists all the procedures used in this TOP, is provided as a reference only. It should not be used alone in finding instructions for performing tasks.

3. Perform all the items in the director level procedure in the indicated order unless it sends you to another director-level procedure. When you complete a director-level procedure, you have finished the task. Where more detailed information is required, you will be sent to a **DLP-( )**. You may also be sent to a DLP by another Detailed Level Procedure. All DLPs are in the DLP tab section of this manual.
4. **IMPORTANT**: Unless otherwise directed, when you complete a DLP, you **MUST** return to the procedure that sent you there.
5. **IMPORTANT**: Unless otherwise directed, if one director-level procedure sends you to another director-level procedure, you should not return to the first director level procedure after you complete the second.
6. Sometimes you will be asked to verify that things have occurred. This may take the form of a formal statement of the expected response. At other times, the instructions will merely state *verify that ...* .

   If the expected response is not observed and a specific trouble clearing reference is not made, you should reference the trouble analysis procedures under the **Trouble Clearing** tab to clear the trouble.
7. When performing tests or procedures using a CIT and system commands, you should refer to the "Commands and Reports" section of this manual for a description of the command, its parameters, and the output messages associated with the command.
8. If a procedure refers to software releases, for example Release 2 or later, it refers to all releases with a numerical value of 2 or higher.

9. If you need assistance in clearing a trouble after completing all the applicable trouble-clearing procedures in this section, contact your local or regional maintenance assistance group. The telephone number for the Lucent Technologies Regional Technical Assistance Center (RTAC) is **1-800-225-RTAC**.

Circuit packs being returned for repair should be sent to the following address:

Lucent Technologies
Returned Goods Dept.
7725 West Reno Avenue
Oklahoma City, OK 73126-0060

Screen Display and Panel Stamping Fonts

The procedures in this manual use a monospace font to identify actual text on a screen or a response displayed from the system. A **bold** font identifies panel stamping such as alarm names or circuit pack names. Also, the **bold** font is used throughout this manual for emphasis.

DDM-2000 FiberReach Installation

363-206-310, *DDM-2000 FiberReach Multiplexer Installation Manual*, is available for customers planning to install the equipment themselves. To acquire this manual, refer to "How to Order Documents" in the **About This Document** tab.

Lucent Technologies recommends that ONLY designated Lucent Technologies cables be used with DDM-2000 FiberReach. Failure to use these cables will void the product warranty.

Safety Instructions

Product Safety Labels

These instructions involve lasers, lightwave optical cable and connectors, and precautions when handling circuit packs to prevent damage from electrostatic discharge. The appropriate user/service manual contains admonishments in the form of **DANGERS, WARNINGS,** and **CAUTIONS** that must be followed at all times.

These admonishments have the following definitions:

- **DANGER** indicates the presence of a hazard that *will* cause death or severe personal injury if the hazard is not avoided.
- **WARNING** indicates the presence of a hazard that *can* cause death or severe personal injury if the hazard is not avoided.
- **CAUTION** indicates the presence of a hazard that *will* or *can* cause minor personal injury or property damage if the hazard is not avoided. The caution is also used for property-damage-only accidents. This includes equipment damage, loss of software, or service interruption.

The alert symbol appears throughout these products and the appropriate user/service manual to alert the user to the presence of important operating and maintenance (servicing) instructions for the DDM-2000 FiberReach.

Electrostatic Discharge (ESD) Considerations

CAUTION:
Industry experience has shown that all integrated circuit packs can be damaged by static electricity that builds up on work surfaces and personnel. The static charges are produced by various charging effects of movement and contact with other objects. Dry air allows greater static charges to accumulate. Higher potentials are measured in areas with low relative humidity, but potentials high enough to cause damage can occur anywhere.

The following precautions should be observed when handling circuit packs in order to prevent damage by ESD:

- Assume all circuit packs contain solid state electronic components that can be damaged by ESD. Use only Lucent Technologies manufactured UL-recognized circuit packs specified in the appropriate user/service manual in this system.
- When handling circuit packs (storing, inserting, removing, etc.) or when working on the backplane, always wear a grounded wrist strap or wear a heel strap and stand on a grounded, static-dissipating floor mat. If a static-dissipating floor mat is used, be sure that it is clean.
- Handle all circuit packs by the faceplate or latch and by the top and bottom outermost edges. Never touch the components, conductors, or connector pins.
- Observe warning labels on bags and cartons. Whenever possible, do not remove circuit packs from antistatic packaging until ready to insert them into slots.
- If possible, open all circuit packs at a static-safe work position, using properly grounded wrist straps and static-dissipating table mats. If a static-dissipating table mat is used, be sure that it is clean.
- Always store and transport circuit packs in static-safe packaging. Shielding is not required unless specified.
- Keep all static-generating materials such as food wrappers, plastics, and *Styrofoam®** containers away from all circuit packs. Upon removal from the bay, immediately put circuit packs into static-safe packages.
- Whenever possible, maintain relative humidity above 20 percent.

* Registered trademark of the Dow Chemical Company.

To reduce the possibility of ESD damage, shelves are equipped with grounding jacks to enable personnel to ground themselves using wrist straps (see Figure 1) while handling circuit packs or working on a shelf(s). The jacks for connection of wrist straps are located at the lower right-hand corner of each shelf and are labeled. When grounding jacks are not provided, an alligator clip adapter enables connection to bay frame ground.

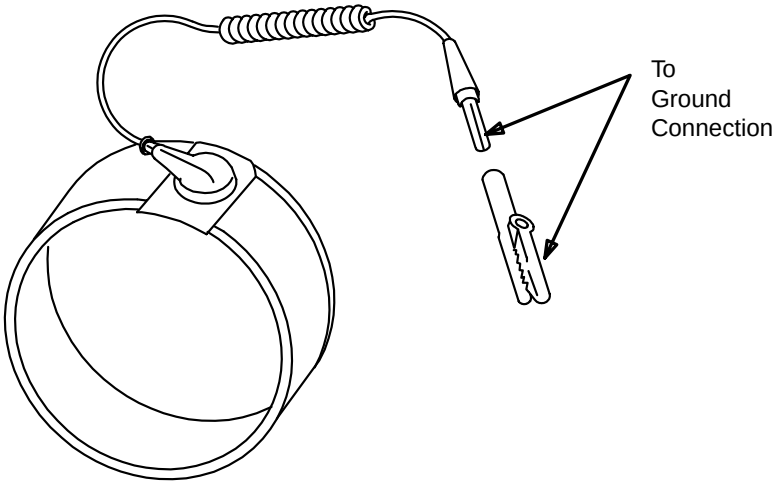

Figure 1. Static Control Wrist Strap

General Safety Instructions

GENERAL SAFETY INSTRUCTIONS

1. Read and understand all instructions.
2. Follow all warnings and instructions marked on the product.
3. Do not place this product on an unstable cart, stand, or table. The product may fall, causing serious damage to the product.
4. Slots and openings in this product's back or bottom are provided for ventilation. To protect it from overheating, these openings must not be blocked or covered. This product should not be placed in a built-in installation unless proper ventilation is provided. For information on proper ventilation requirements, consult the "Equipment Installation Considerations" section of 363-206-310, *DDM-2000 FiberReach Multiplexer Installation Manual*.
5. This product should be operated only from the type of power source indicated on the marking label. For information on proper electrical distribution and power requirements, refer to the "Power" and "Technical Specifications" sections of the appropriate user/service manual.
6. Never push objects of any kind into this product through cabinet slots as they may touch dangerous voltage points or short out parts that could result in a risk of fire or electrical shock. Never spill liquid of any kind on the product.
7. To reduce the risk of electrical shock, do not disassemble this product. Service should be performed by trained personnel only. Opening or removing covers and/or circuit packs may expose you to dangerous voltages or other risks. Incorrect reassembly can cause electrical shock when the unit is subsequently used.

   CAUTION:
   Disconnect power connections when removing power from the system.

8. Use only Lucent Technologies manufactured UL-recognized circuit packs. Recognized circuit packs are listed in the appropriate user/service manual.

SAVE THESE INSTRUCTIONS.

Installation Safety Instructions

INSTALLATION SAFETY INSTRUCTIONS

1. Read and understand all instructions.
2. Installation and maintenance procedures must be followed and performed by trained personnel only.
3. All DS1 interfaces should not leave the building premises unless connected to telecommunication devices providing primary or secondary protection, as applicable.
4. For information on proper mounting instructions, consult 363-206-310, *DDM-2000 FiberReach Multiplexer Installation Manual*.
5. Never install telecommunication wiring during a lightning storm.
6. Never install telecommunication connections in wet locations.
7. Never touch uninsulated telecommunication wires or terminals unless the telecommunication line has been disconnected at the DS1 interface.
8. Use caution when installing or modifying telecommunication lines.

SAVE THESE INSTRUCTIONS.

Master Task Index
Operation and Maintenance

FIND YOUR JOB IN THE LIST BELOW . . . . . THEN GO TO

Accept DDM-2000 FiberReach Narrowband Shelf. . . . . Acceptance: NTP-002

Clear CDTU Failure Alarm . . . . . Trouble Clearing: TAP-104

Clear CONFIG Failure Alarm . . . . . Trouble Clearing: TAP-106

Clear CU Stuck Relay Alarm . . . . . Trouble Clearing: TAP-107

Clear DSXBIU Failure Alarm . . . . . Trouble Clearing: TAP-102

Clear DT Failure Alarm. . . . . Trouble Clearing: TAP-108

Clear PCU Failure Alarm . . . . . Trouble Clearing: TAP-105

Clear RGU Failure Alarm . . . . . Trouble Clearing: TAP-103

Clear DDM-2000 NBS System Alarms; DT Server Alarms; NE, MJ, and DIGROUP or MN Alarms at HDT . . . . . Trouble Clearing: TAP-101

Determine *SLC*-2000 DT Circuit Arrangement. . . . . Detailed Level Procedure: DLP-513

End-to-End Testing. . . . . Detailed Level Procedure: DLP-512

Install –48 V DC PCU (AUA432) . . . . . Detailed Level Procedure: DLP-502

Install and Test Channel Units . . . . . Circuit Order: NTP-004

Install CDTU (AUA421). . . . . Detailed Level Procedure: DLP-506

Install Channel Units. . . . . Detailed Level Procedure: DLP-504

Install DSXBIU (FHB2) . . . . . Detailed Level Procedure: DLP-505

Install RGU (AUA413). . . . . Detailed Level Procedure: DLP-503

Maintenance Philosophy . . . . . Trouble Clearing: TAD-100

Perform End-to-End System Tests . . . . . Circuit Order: NTP-003

FIND YOUR JOB IN THE LIST BELOW . . . . . THEN GO TO

Perform DDM-2000 NBS MLT Channel
Test . . . . . Detailed Level Procedure: DLP-511

Perform Visual Inspection of the Drop
Terminal Blocks . . . . . Detailed Level Procedures: DLP-501

Perform Visual Inspection of the
Electronics Compartment . . . . . Detailed Level Procedures: DLP-500

Set Options on *SPQ*810 DT Server
for Use with FR NBS . . . . . Detailed Level Procedure: DLP-508

Test ONU Drops 1-24 (Shelf 1)
1-24 (Shelf 2) . . . . . Detailed Level Procedure: DLP-507

Turn Up Narrowband Shelf . . . . . System Turnup: NTP-002

Rear Access to the Wall DT Cabinet . . . . . Detailed Level Procedure: DLP-514

Perform Visual Inspection of the
STAC Cabinet . . . . . Detailed Level Procedures: DLP-515

Numberical List of TOP Procedures

Table A. Numerical List of TOP Procedures (Note)

Acceptance Tab	
IXL-001	Acceptance Task Index
NTP-002	Accept DDM-2000 FiberReach Narrowband Shelf
System Turnup/Circuit Order Tab	
IXL-001	Task Index - System Turnup/Circuit Order
NTP-002	Turn Up Narrowband Shelf Rack Mount System
NTP-003	Perform End-to-End Tests
NTP-004	Install and Test Channel Units
Operations Tab	
IXL-001	Task Index
Trouble Clearing Tab	
IXL-001	Task Index
TAD-100	Maintenance Philosophy
TAP-101	Clear DDM-2000 NBS System Alarms; DT Server Alarms; NE, MJ, and DIGROUP or MN Alarms at HDT
TAP-102	Clear DSXBIU Failure Alarm
TAP-103	Clear RGU Failure Alarm
TAP-104	Clear CDTU Failure Alarm
TAP-105	Clear PCU Failure Alarm
TAP-106	Clear CONFIG Failure Alarm
TAP-107	Clear CU Stuck Relay Alarm
TAP-108	Clear DT Failure Alarm

See note at end of table.

Table A. Numerical List of TOP Procedures (Contd) (Note)

Detailed Level Procedures (DLP) Tab

DLP-500	Perform Visual Inspection of the Electronics Compartment
DLP-501	Perform Visual Inspection of the Drop Terminal Blocks
DLP-502	Install -48 V DC PCU (AUA432)
DLP-503	Install RGU (AUA413)
DLP-504	Install Channel Units
DLP-505	Install DSXBIU (FHB2)
DLP-506	Install CDTU (AUA421)
DLP-507	Test ONU Drops 1 - 24 (Shelf 1) 1 - 24 (Shelf 2)
DLP-508	Set Options on *SPQ*810 DT Server For Use With FR NBS
DLP-509	Unused
DLP-510	Unused
DLP-511	Perform DDM-2000 NBS MLT Channel Test
DLP-512	End-to-End Testing
DLP-513	Determine *SLC*-2000 DT Circuit Arrangement
DLP-514	Rear Access to the Wall DT Cabinet
DLP-515	Perform Visual Inspection of the STAC Cabinet

Note: Table 1 is provided as a reference only, and should not be used alone in finding instructions for performing tasks.

Task Index
Acceptance

FIND YOUR JOB IN THE LIST BELOW . . . . . THEN GO TO

Accept NBS . . . . . Acceptance: NTP-002

Accept DDM-2000 FiberReach Narrowband Shelf (NBS)

DO ITEMS BELOW IN ORDER LISTED . . . . FOR DETAILS, GO TO

General

Acceptance tests of the NBS are performed to ensure that proper installation procedures have been performed.

For *SLC*®-2000[1], Release 4.4 or later, the NBS is powered by –48 V DC.

The acceptance tests generally assume the following:

- Accurate and concise system designations and office records are available
- There is an operational *SLC*-2000 DT server
- Any trouble found and not corrected during testing is referred to the responsible installation group
- The test equipment to be used is available, properly tested, and properly calibrated.

---

1. Obtain the following equipment:
   - 216-C tool (COMCODE 102450574) if required
   - Digital multimeter (DMM) with an accuracy of 1.0% and an AC/DC input impedance of ≥ 1 megohm.

---

2. Verify the NBS enclosure is securely mounted.

---

3. Perform visual inspection of the electronics compartment. **DLP-500**

---

1. Registered trademark of Lucent Technologies Inc.

DO ITEMS BELOW IN ORDER LISTED . . . . . FOR DETAILS, GO TO

4. Verify –48 V DC power at the NBS. Measure voltage on the PCU at test points –**48VDC** and –**48VDC RETURN**.

   Requirement: –42 to –60 V DC.

   DLP-502

5. **STOP. YOU HAVE COMPLETED THIS PROCEDURE.**

Task Index
System Turnup/Circuit Order

FIND YOUR JOB IN THE LIST BELOW . . . . . THEN GO TO

NOTE:
Acceptance procedures in NTP-002 must have been completed prior to performing any Circuit Order procedures.

Turn Up Narrowband Shelf Rack Mount System . . . . . System Turnup: NTP-002

NOTE:
Determine that the facility DS1 between the Release 4.4 ot later *SLC*-2000 DT server and NBS has been connected prior to performing Circuit Order: NTP-004.

Perform End-to-End System Test . . . . . Circuit Order: NTP-003

Install and Test Channel Units . . . . . Circuit Order: NTP-004

Turn Up Narrowband Shelf
Rack Mount System

DO ITEMS BELOW IN ORDER LISTED . . . . FOR DETAILS, GO TO

Summary:

This NTP is used to install the common units in the narrowband shelf (**PCU**, **RGU**, **DSXBIU**, and **CDTU**). It also provides references to the system end-to-end tests (**Circuit Order: NTP-004**).

1. Verify that the acceptance procedures in **Acceptance: NTP-002** have been performed.

2. Verify that the required circuit packs to be installed are available.

3. ⚠ **CAUTION:**
   An electrostatic discharge wrist strap, with a minimum resistance of 250K Ω, should be worn when handling circuit packs to prevent possible damage to the circuit packs. Before using the wrist strap, check it for opens, shorts, and minimum resistance value. If the strap does not pass these checks, it should not be used.

   Obtain the equipment listed below:

   - 216-C tool (COMCODE 102450574) (cabinet) or sloted screwdriver (frame).
   - DMM (digital multimeter) with an AC (true rms) and DC meter accuracy of 1.0% and an AC and DC input impedance of ≥ 1 megohm.

DO ITEMS BELOW IN ORDER LISTED . . . . . FOR DETAILS, GO TO	
4. Unlock the electronics compartment door using the 216-C tool, if required.	
5. Install –48 V DC **PCU** (**AUA432**), if not performed in **Acceptance: NTP-002**.	**DLP-502**
6. Install **RGU** (**AUA413**/**AUA423**).	**DLP-503**
7. **NOTE:** At this point, the NE and the FAIL indicator on the **DSXBIU** will be lit. All other circuit packs should not have any indicators. Install **DSXBIU**.	**DLP-505**
8. Install **CDTU** (**AUA421**).	**DLP-506**
9. Verify that the DS1 signal is present at the DT using DS1 test set.	
10. **NOTE:** When this link is established there will be a 4-hour wait for the **DSXBIU** to download software if nor already done. Turn-up the DSX-1 links to the *SLC*-2000.	
11. Install channel units.	**DLP-504**
12. Update office records.	
13. **STOP. YOU HAVE COMPLETED THIS PROCEDURE**.	

Perform End-to-End System Tests

DO ITEMS BELOW IN ORDER LISTED . . . . FOR DETAILS, GO TO

Summary:

This NTP is used to test the system from the local digital switch (LDS) to the drop terminal block at the NBS (Figure 1). This is accomplished by placing a POTS channel unit in slots one and six of channel unit shelf one and slots seven and twelve of channel unit shelf two.

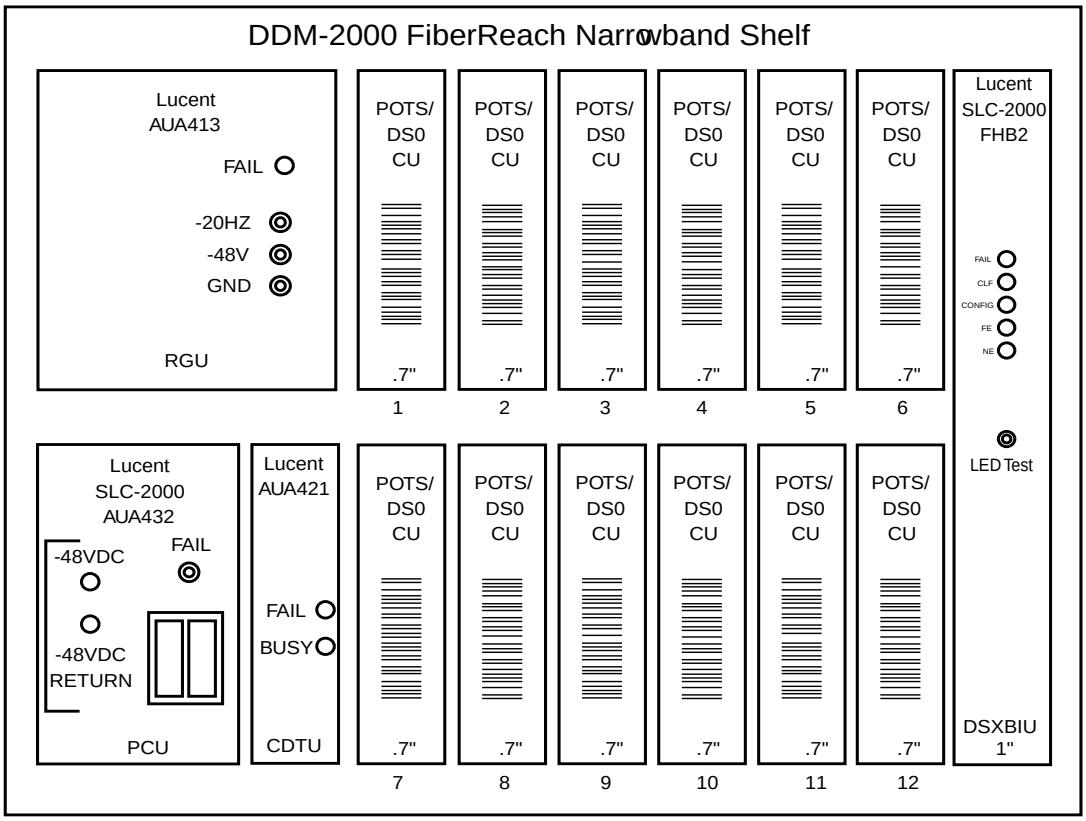

Figure 1 – Narrowband Shelf

DO ITEMS BELOW IN ORDER LISTED. . . . . FOR DETAILS, GO TO

At the LDS

1. Verify that the directory numbers and POTS type of service (loop-start) are assigned to the Logical Line Numbers (LLNs) that are associated with drops 1-24 on shelf 1, and drops 1-24 on shelf 2 of the NBS.

At the *SLC*-2000

2. Verify that there are no alarms associated with the *SLC*-2000 under test

3. Verify that the T0 cross connections (**`ENT-CRS-T0`** and **`RTRV-CRS-T0`**) associated with the channel unit slots under test have been made. (Refer to 363-208-003, *SLC-2000 Access System Command and Message Manual*.)

At the NBS

4. Verify that there are no visual alarms present on the NBS.

5. Verify that the POTS channel units to be installed in slots 1 and 6 and 7 and 12 are available.

6. Open electronics compartment door using a 216-type tool (if required).

7. Connect your ESD wrist strap to the ESD ground jack located at the lower right front of the NBS enclosure.

8. Insert POTS channel units, as required.

9. Test NBS drops 1-24 (Shelf 1) and 1-24 (Shelf 2). **DLP-507**

DO ITEMS BELOW IN ORDER LISTED . . . . FOR DETAILS, GO TO

10. Check the narrowband shelf indicators by pressing the LED **TEST** button on the **DSXBIU**.

    Requirement: All LEDs light on the **DSXBIU**, **PCU**, **RGU**, **POTS** Channel Units (**CU**s) and **CDTU**.

11. Verify the alarm reporting system by removing the **RGU**.
    - **CONFIG** and **NE** LED lights on the **DSXBIU**.
    - **FE** and **MJ** alarms at the NBS.

12. Reinstall **RGU**.

    Requirement: All alarms clear.

13. **STOP. YOU HAVE COMPLETED THIS PROCEDURE.**

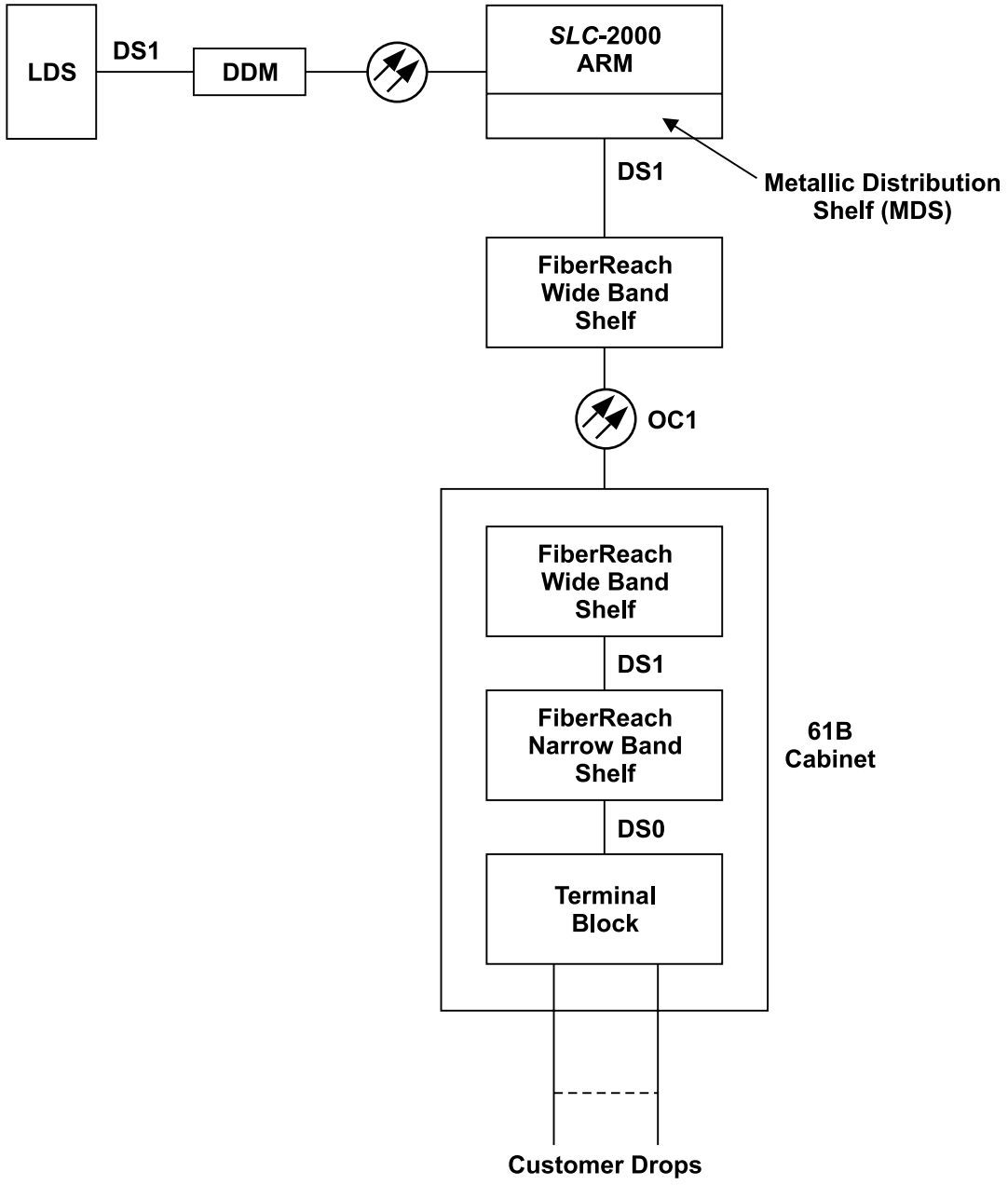

Figure 2 – Basic System Block Diagram

Install and Test Channel Units

DO ITEMS BELOW IN ORDER LISTED . . . . FOR DETAILS, GO TO

Summary:

The procedures associated with this NTP tell how to install and test channel units.

These procedures assume the following:

- The acceptance and turn-up procedures in this manual have been completed.
- There are no alarms present on the system.
- All T0 cross-connections are made at the *SLC*-2000. For more information, refer to 363-208-003, *SLC-2000 Access System Command and Message Manua*l.
- The circuits being tested are wired or conditioned for service at the local digital switch (LDS).

Channel Unit Options

Refer to 363-208-001, *SLC*-2000 *Access User/Service Manual*, for setting channel unit options.

DO ITEMS BELOW IN ORDER LISTED . . . . . FOR DETAILS, GO TO

Add Channel Units

To add additional service to an existing NBS, the appropriate channel unit(s) must be installed in the NBS, provisioning must be done at the HDT site, and end-to-end testing performed. Channel units may be added without interrupting existing service.

Channel Unit Installation and Testing Procedures

1.	Install Channel Units	**DLP-504**
2.	**STOP. YOU HAVE COMPLETED THIS PROCEDURE**.	

Task Index
Operation

Perform Visual Inspection of the Electronics Compartment . . . . . Detailed Level Procedure: DLP-500

Install –48 V DC PCU (AUA432) . . . . . Detailed Level Procedure: DLP-502

Install RGU (AUA413/AUA423). . . . . Detailed Level Procedure: DLP-503

Install Channel Units. . . . . Detailed Level Procedure: DLP-504

Install DSXBIU (FHB2) . . . . . Detailed Level Procedure: DLP-505

Install CDTU (AUA421). . . . . Detailed Level Procedure: DLP-506

Test ONU Drops 1-24 (Shelf 1) 1-24 (Shelf 2) . . . . . Detailed Level Procedure: DLP-507

Set Options on S*PQ*810 DT Server for Use with FR NBS . . . . . Detailed Level Procedure: DLP-508

Perform DDM-2000 NBS MLT Channel Test . . . . . Detailed Level Procedure: DLP-511

End-to-End Testing. . . . . Detailed Level Procedure: DLP-512

Determine *SLC-2000* DT Server Arrangement . . . . . Detailed Level Procedure: DLP-513

Rear Access to the Wall DT Cabinet . . . . . Detailed Level Procedure: DLP-514

Perform Visual Inspection of the STAC Cabinet. . . . . Detailed Level Procedure: DLP-515

Task Index
Trouble Clearing

FIND YOUR JOB IN THE LIST BELOW . . . . . THEN GO TO

Maintenance Philosophy TAD-100

Clear DDM-2000 NBS Alarms; DT Server Alarms; NE, MJ, and DIGROUP or MN Alarms at HDT TAP-101

Clear DSXBIU Failure Alarm TAP-102

Clear RGU Failure Alarm TAP-103

Clear CDTU Failure Alarm TAP-104

Clear PCU Failure Alarm TAP-105

Clear CONFIG Failure Alarm TAP-106

Clear CU Stuck Relay Alarm TAP-107

Clear DT Failure Alarm TAP-108

Maintenance Philosophy

GENERAL

The DDM-2000 NBS provides up to 48 POTS or special service circuits, up to 40 ISDN lines, or a combination of both.

ALARMS

The SLC-2000 Server unit (***SPQ*810/811**) in the *SLC*-2000 and the **DSXBIU** in the NBS provide summary alarms for the NBS. The **PCU**, **RGU**, **CDTU**, and **DSXBIU** at the NBS, and the NBS Server at the RT, all have a FAIL indicator that lights when the circuit pack fails. The *SLC*-2000 Server provides an alarm interface between the *SLC*-2000 Carrier System and the Narrow Band Shelf.

Trouble should be cleared in the *SLC*-2000 carrier system before attempting to clear NBS system trouble. A *SLC*-2000 trouble may light alarms on other common units (**VTU**s, **MXRVO**s, **MDC**s, **PTU**s, etc.) and can be isolated using the user interface panel (UIP) **`retrieve-alarms`** and **`retrieve-faults`** commands. Mechanized loop testing (MLT) tests can determine the status of a channel in the NBS. The test will return a DC signature that indicates whether the facility link between the *SLC*-2000 and NBS is good or bad and indicates possible trouble on the customer drop (off hook, foreign voltage on drop, etc.). MLT test access will be denied on any digroup that has a digroup alarm caused by a carrier system trouble.

The following is a summary of *SLC*-2000 Server and (NBS) **DSXBIU** faceplate alarm indicators.

SLC-2000 Server Alarm Summary

FAIL	The *SLC*-2000 Server pack has failed self-diagnostic tests.
CLF	Carrier line fail, communication with the NBS is lost. Path for DS1 may be interrupted.
CONFIG	Placement of a channel unit in the wrong slot or an error in the SLOT ALLOCATION option setting on the *SLC*-2000 Server channel unit (363-208-001, *SLC-2000 Access User/Service Manual*). Correct placement or SLOT ALLOCATION option setting to clear **CONFIG** alarm. If the *SLC*-2000 Server is installed per work order, record the digroup channel unit equipage and refer the trouble to the engineering center. If **CONFIG** and *SLC*-2000 are both on, the channel unit installation trouble is at the NBS.

DSXBIU Alarm Summary

FAIL	The **DSXBIU** circuit pack has failed self-diagnostic tests.
CLF	Communication with the *SLC*-2000 Server is lost.
CONFIG	Placement of a channel unit in the wrong slot or an error in the SLOT ALLOCATION switch setting on the *SLC*-2000 Server channel unit. Correct channel unit placement or SLOT ALLOCATION option setting to clear **CONFIG** alarm. If **CONFIG** and **FE** are both on, the channel unit installation trouble is at the RT *SLC*-2000. If **CONFIG** and **NE** are both on, the channel unit installation trouble is at the *SLC*-2000. **Note:** The **CONFIG** LED on **DSXBIU** will flash while a software download is in progress. This is not considered a trouble condition.
FE	Trouble with SLC-2000 Server or any equipment in between.
NE	Trouble with equipment in the NBS.

TROUBLE ANALYSIS PROCEDURES

A general knowledge of how the *SLC*-2000 system and DDM-2000 FiberReach NBS system function and what alarm LED indications mean will aid in performing TAPs (trouble analysis procedures). TAPs in this volume generally assume the following:

- The system is equipped with the plug-ins required to make an operating system.
- There may be a single cause for multiple trouble indications.
- Only a single trouble cause is assumed to exist.
- The trouble cause is not caused by a carrier system failure.

In case of an alarmed system failure, the craftsperson is first directed to the *SLC*-2000 by an examination of **FE** (far end), digroup (A, B, C, or D) indicator, and **MJ** and **MN** indication at the CO equipment. Then the *SLC*-2000 Server alarm indicators provide further trouble isolation information.

When maintenance for the system is the responsibility of a remote maintenance center, the center will respond to the initial system alarm and dispatch personnel to the appropriate location (CO or RT) to clear trouble. MLT test results may direct the craftsperson to the NBS site.

A craftsperson can connect a craft interface terminal (CIT) at a CO DDM/*SLC*-2000 node and remotely log in to the *SLC*-2000 RT and retrieve a fault and alarm list, if the system is fiber fed.. The fault list can identify several fault conditions at the NBS.

DDM-2000 NBS system trouble clearing normally begins at the *SLC*-2000 using **TAP-101**.

Trouble clearing is based on replacement of plug-ins. Any options on replacement plug-ins must be set per the appropriate facility record. Whenever replacement of a plug-in does not cure the trouble, the original plug-in should be returned to operation.

The time interval between when a trouble is cleared and when the alarm LEDs go off is usually less than 35 seconds.

There are several indications that the craftsperson may use to determine whether an error has been made during system maintenance:

- A new circuit pack (CP) is installed in the RT at turn-up or during maintenance. The CP's **FAIL** indicator (LED) should be observed to ensure that it lights momentarily, then goes off. The absence of this indication should cause the craftsperson to check for proper CP type, option settings, and location.

- A misplaced *SLC*-2000 Server should always cause the **CONFIG** indicator to light if the CP placement/setting is in conflict with the *SLC*-2000 Server installation rules (only when inserted in shelf set for metallic).
- If the **FAIL** LED stays on following the replacement of a common unit, the CP is probably failed, is installed in the wrong position, contains incorrectly set options, or another circuit pack/wiring trouble may cause the trouble.

The following procedure may be used when a problem is indicated (as above) following replacement of a unit. A simple verification of craft personnel error may be made as follows: While observing the **FAIL** LED on the unit just replaced, depress the **DSXBIU LED TEST** switch or the UIP **LED TEST** switch (*SLC*-2000 Access System). If the **FAIL** LED on the replaced CP does not light, a craftsperson error of the type listed above is indicated.

CAUTION:
An electrostatic discharge wrist strap, with a minimum resistance of 250K ohms, should be worn and connected to a suitable ground when handling circuit packs to prevent possible damage to the circuit packs. Before using the wrist strap, check it for opens, shorts, and minimum resistance value. If the strap does not pass these checks it should not be used. To avoid possible personal injury while using the wrist strap, do not connect it to the power shelf or adjacent portions of the RT frame. The RT fan unit has an ***ESD GRD*** *jack for wrist strap connection.*

CUSTOMER TROUBLE REPORTS

A customer trouble report is generally an unalarmed trouble and usually indicates a channel unit problem or distribution facility problem.

Single-party, multiparty, and test service trouble reports are first received at the repair service bureau (RSB). The RSB uses MLT to test the circuit if it is available. The result of the MLT is a DC signature that indicates the status of the NBS and drop pair health using the *SLC*-2000 Server at the RT and the channel and drop test unit (**CDTU**) at the NBS. The pair gain test controller (**PGTC**), extended test controller (**XTC**) **PGTC** emulation mode, or test bus control unit (**TBCU**) can test the NBS channel unit and report its results to the MLT system. If the MLT test result reports a problem, a trouble report is initiated to the proper repair force and trouble analysis procedures begin at the RT or NBS depending on the result. If the MLT test result finds no trouble with the NBS system, a replacement of the **COT** channel unit (if universal) is performed first. Then if the trouble is still present, a replacement of the RT/NBS channel unit is made.

Special service trouble reports are received at the special services center (SSC). The NBS can provide 2-wire locally switched special services, coin service, 4-wire special services, and data service. The **Channel Unit Installation** tab in 363-208-001,*SLC*-2000 *Access System User/Service Manual*, contains procedures to install and test channel units for a *SLC*-2000 system host. These procedures can be used to clear in-service special service troubles by performing the tasks to add channel service for the type of channel unit that has trouble. These procedures will clear the trouble conditions if the host system is causing the problem. Procedures in this document will clear troubles caused by the NBS system. Customer equipment, drop pairs, or central office (or network) equipment can also cause the trouble condition.

CONCLUSION

When procedures in this document do not locate the trouble, an obscure trouble or multiple troubles are assumed to exist. The necessary schematic drawings (SDs), circuit descriptions (CDs), etc., should be available to assist in locating an obscure wiring problem.

Clear DDM-2000 NBS System Alarms, DT Server Alarms, NE, MJ, and DIGROUP, or MN Alarms at HDT

General:

This procedure is used to clear DDM-2000 FiberReach NBS trouble reports when the DT Carrier System is working normally (no alarm indicators on power shelf equipment and other common units except the MJ or MN and possible Digroup alarms). The FiberReach System feature includes the DT Server ***SPQ*810/811** unit, and the DT equipment. CO-to-RT carrier system trouble conditions will cause the DT Server or **DSXBIU** displays to flash when the carrier system fails. The **CLF** lamp on the DT and the **CLF** lamp on the **DSXBIU** will light when the carrier system fails. This procedure is intended to clear trouble reports for a single NBS and starts at the remote terminal (RT) or NBS site. Central office (CO) equipment alarms caused by the NBS feature trouble are typically FE, MJ, DIGROUP or MN. If there are no alarms but there are customer trouble reports, start trouble clearing at the RT unless mechanized loop testing (MLT) test results indicate otherwise. The DT Server and the **DSXBIU** alarms provide a summary of all trouble conditions and may light the same indicators for different events. It is easy to determine the cause of a single event by indicators on other NBS circuit packs. For multiple trouble conditions, you may clear one trouble and the **DSXBIU** alarms may change or remain on because of the other event document 363-208-202 provides procedures to clear NBS troubles from a *SLC*-2000 system. Refer to Table A in this section to identify alarm and fault messages associated with **FITL** distribution modes.

NOTE:
The **AUA406**, **AUA408**, and ***SPQ*810/811** DT Servers are not supported in DDM-2000 NBS configurations.

NOTE:
This procedure may direct you to replace the **DSXBIU** in the NBS or a DT Server at a *SLC*-2000 HDT. If you replace the **DSXBIU**, the system may start to download software into the new **DSXBIU**. You can verify this by observing that the **CONFIG** LED flashes on the **DSXBIU**. Wait for the flashing to end. The download takes about 4 hours. Wait for the download to complete before proceeding to the next step.

1. Is trouble on a single NBS or DT Server, or associated with a shelf 1 or shelf 2), or single digroup?

   If **NBS** or **DT** Server, continue with **Step 2.**

   If **otherwise**, use 363-208-001, *SLC*-2000 *User Service Manual* to clear multiple channel trouble.

   STOP. YOU HAVE COMPLETED THIS PROCEDURE.

2. If you are at the RT, continue with **Step 3**; if you are at the DT or NBS, proceed to **Step 7**; if you are at the central office, go to the RT unless MLT test results indicate otherwise.

3. Press the **LED TEST** button and verify that all DT Server indicators light. Quickly replace the DT Server circuit pack if they do not.

   Comment: **For *SLC*-2000 HDTs**, the **INCOMP** LED on the MDC circuit pack will light and the DT Server's LEDs will not light if the shelf is configured for **METL**. If a replacement DT Server's LEDs do not light, verify that the shelf is configured for **FITL** using the user interface panel (UIP) **`SET-DISTN`** command. If necessary, remove both **MDC** packs in the shelf (upper or lower section) and change the distribution mode to **FITL**. Then reseat the **MDC** packs and repeat the LED test.

4. **NOTE:**
Verify that the **DSX** option switch on the server is set appropriately.

Refer to Table A for the *SLC*-2000 HDT user interface panel (UIP) alarm and fault messages associated with FITL distribution. Refer to Table B for the *SLC*-2000 UIP alarm and fault messages associated with LED indicators at the *SLC*-2000 HDT and the DDM-2000 NBS. To view alarm or fault messages, press the UIP **Escape** button. Then press the **Scroll Menu** down arrow until **RETRIEVE-ALARMS: <ent>** or **RETRIEVE-FAULTS: <ent>** is displayed. Then press **Scroll** Menu down arrow to scroll through the messages.

Table A – *SLC*-2000 UIP Alarm and Fault Messages Associated with FITL Distribution Mode (Notes)

UIP Alarm Messages Severity	Message	Meaning
MJ or MN	{aid} rcvd FITL YEL	Yellow alarm received from NBS
MN	{aid} rcvd MISC	MISC alarm received from NBS
MN	{aid} DT CU failed	CU failed at NBS (Note 1)
MN	{aid} ISDN slot err	ISDN CU placement violation in NBS (Note 2)
MN	{aid} power alarm	Power source failure (Note 3)
ABN	{aid} dnld abort	**DSXBIU** software download/installation failed
ABN	{aid} downloading	**DSXBIU** software downloading/installation in progress
MN	{aid} batt chrg fail	DT battery charger failed
MN	{aid} isdn cnflt	NBS ISDN CU placement violation (Note 4)
UIP Fault Messages Severity	**Message**	**Meaning**
MJ or MN	{aid} biu failed	**DSXBIU** circuit pack failed
MJ or MN, NE	{aid} DT CLF	RT-to-NBS carrier-line-failure
MN	{aid} datalink fail	RT-to-NBS ESF datalink failed
MN	{aid} cu failed	CU failed in NBS
MN	{aid} door open	DT door(s) open
MJ or MN	{aid} rgu failed	DT ringing generator failed
MN	{aid} pcu failed	DT power converter unit failed
MN	{aid} cdtu failed	DT channel & drop-test unit failed
MN, NE	{aid} config	DT Server configuration error
MJ or MN, NE	{aid} failed	DT Server failed
MN	{aid} incompat	Incompatible CU in NBS
MN	{aid} rcvd misc	MISC alarm received from NBS

See Notes at end of table

Notes:

- The general syntax of UIP messages: Alarm-severity: which end: AID message.
- Each error message will print a circuit pack address identifier {aid}. For FITL error messages, the AID will generally begin with the characters 'dt', with the exception of errors involving the DT Server, which may begin with 'cu' (referencing the MDS CU slot holding the server).
- Note that the DT Server's DT LED will also light when the error is reported by the NBS.
- The NE Activity is indicated where the cause of the message calls for corrective action starting at the RT.
- In the following notes, the *SLC*-2000 FITL system enhanced alarm reporting is when the *SLC*-2000 HDT, DT Server and the NBS **DSXBIU** operation supports the enhanced alarms.

    1. The {aid} reported is of the associated DT Server if the *SLC*-2000 FITL system operation does not support enhanced alarms. See the *SLC-2000 HDT Software Release 4 Required Circuit Packs for Specific DT Features* table in Chapter 3.
    2. This message is displayed whenever NBS reports ISDN channel unit placement violation.
    3. This message is displayed in those versions of the DDM-2000 NBS that do not support enhanced alarms.
    4. This message is displayed whenever *SLC*-2000 HDT determines ISDN channel unit placement violation at the NBS.

Table B – *SLC*-2000 UIP Alarm and Fault Messages Associated with FITL Distribution Mode (Notes)

UIP Alarm Messages Severity	Message	LED Indicators *SLC*-2000 HDT	NBS (DSXBIU)
MJ or MN	{aid} rcvd FITL YEL	Server — DT	—
MN	{aid} rcvd MISC	Server — DT	Ne
MN	{aid} DT CU failed	Server — DT	Ne
MN	{aid} ISDN slot err	—	Ne/Config
MN	{aid} power alarm	Server — DT	Ne
ABN	{aid} dnld abort	—	—
ABN	{aid} downloading	Server — DT (Flashing)	All LEDs Flashing
MN	{aid} isdn cnflt	MDC — Incomp, Server DT/Config	NC/Config
UIP Fault Messages Severity	**Message**	**LED Indicators *SLC*-2000 HDT**	**NBS (DSXBIU)**
MJ or MN	{aid} biu failed	Server — DT	FAIL
MJ or MN, NE	{aid} DT CLF	Server — CLF	—
MN	{aid} datalink fail	Server — DT	CLF/Fe
MN	{aid} cu failed	—	Slot Alloc (Flashing)/Fe
MN	{aid} door open	Server — DT	—
MJ or MN	{aid} rgu failed	Server — DT	Ne
MN	{aid} pcu failed	Server — DT	Ne
MN	{aid} cdtu failed	Server — DT	Ne
MN, NE	{aid} config	MDC — incomp	CLF
MJ or MN, NE	{aid} failed	MDC — fail	CLF
MN	{aid} incompat	MDC — incomp, Server — DT/config	Ne/config
MN	{aid} rcvd misc	Server — DT	Ne
The **CONFIG** lamp on **DSXBIU** will flash on download.			

5. Examine the DT Server alarms and perform the item below for the lit indicators.

   FAIL

   Replace DT Server with same option settings.

   CLF

   - If the **DT** indicator is also on, the fiber facility and transmission from the NBS to the RT are OK. The problem is in the transmit section of the RT (DT Server or NBS) or receive section of the WBS complex.
   - To clear the **CLF** with or without the **DT** alarm, perform the following list in the order given. If a replacement circuit pack does not clear the trouble, reinsert the original pack and continue with the next item:

     a. If the CLF alarm does not clear, use local procedures to repair fiber or T1 facility and/or wiring troubles.

   DTT

   Trouble is with the NBS equipment. Proceed to NBS site and go to **Step 8**.

   Comment: The DT indicator will flash if the **DSXBIU** software at the NBS site is in the process of being updated.

   CONFIG

   Placement of a channel unit in the wrong slot. This alarm should not be lit when troubleshooting the DDM-2000 NBS feature because this indicator lights during craft personnel activity with an DT Server or CIT at the RT or when a channel unit is installed at the RT or NBS. The **CONFIG** indicator should not be left lit when working with channel units at the RT. If **CONFIG** and **DT** are both lit, the channel unit installation trouble is at the NBS. If only **CONFIG** and no other indicators are lit, check RT and NBS for channel unit conflict.

   Comment: Refer to the NBS slot restrictions and alarm information of this document.

6. Was trouble cleared at the RT?

   If **YES**, **STOP. YOU HAVE COMPLETED THIS PROCEDURE.**

   If **NO**, proceed to NBS and continue with **Step 7**.

7. On **DSXBIU**, are any indicators lit?

   If **YES**, do **TAP-102** .

   If **NO**, continue with **Step 8**.

8. Are any indicators on the **PCU** or **RGU** lit?

   If **YES**, do **TAP-105** or **TAP-103**.

   If **NO**, continue with **Step 9**.

9. Press the **LED TEST** button on the **DSXBIU** and verify that all **DSXBIU, PCU, RGU,** and **CDTU** indicators light (quad channel unit **BUSY** LEDs may also light). Quickly replace any circuit pack if any of its indicators do not light. Replace the **DSXBIU** if the replacement circuit pack indicators do not light (see second **Note** in the General section of this TAP).

10. At NBS, is **FAIL** indicator lit on any circuit pack?

    If **YES**, continue with **Step 11**.

    If **NO**, proceed to **Step 12**.

11. Replace circuit pack with **FAIL** indicator lit. If more than one **FAIL** indicator is on, replace the following circuit packs with **FAIL** lit in the following order:

    - **PCU** or **RGU** — Use **TAP-105** and **TAP-103** procedures to replace these circuit packs.
    - **DSXBIU** (see **TAP-102**).
    - **CDTU** (see **TAP-104**).
    - Any channel unit with **FAIL** lit.

12. Did NBS trouble clear?

    If **YES**, **STOP. YOU HAVE COMPLETED THIS PROCEDURE.**

    If **NO**, continue with **Step 13**.

13. Examine the **DSXBIU** alarms, and perform the item below for the lit indicators:

    FAIL

    Replace **DSXBIU**.

    NE and **FAIL**

    There is a failure somewhere in the T1 facility.

    NE and no other alarms on any circuit pack

    An **NE** and no other NBS alarms can be caused by any combination of the following events:

    - Miscellaneous alarm closure. Clear trouble that caused alarm.
    - **RGU** circuit pack failure.
    - May be caused by failure of a channel unit. A channel unit failure will not cause alarms at the COT and is typically found from a customer trouble report. Remove channel units one at a time to find bad channel unit.

WARNING:
Removing a channel unit will interrupt service if the channel is busy.

CLF

- If the **FE** indicator is also on, the fiber or T1 facility and transmission from the RT to the NBS are OK, and the trouble is in the transmit section from the NBS or the receive section at the RT.
- To clear the **CLF** with or without **FE** alarm, perform the following list in the order given. If a replacement circuit pack does not clear the trouble, reinsert the original pack and continue with the next item:
    1. Clear any alarms on Wide Band Shelf.
    2. Replace the **DSXBIU** (see second **Note** in the General section of this TAP).
    3. Replace the DT Server (see second **Note** in the General section of this TAP).
    4. If the **CLF** alarm does not clear, use local procedures to repair fiber or T1 facility and/or wiring troubles.

FE

If only the **FE DSXBIU** indicator is on, the trouble is in the data link between the NBS and RT. Replace the following units:

- DT **DSXBIU** (see second **Note** in the General section of this TAP).
- Proceed to the RT if trouble did not clear, and quickly replace the DT Server (with same option settings).

CONFIG

Placement of a channel unit in the wrong slot — This NBS alarm should not be lit when troubleshooting the DDM-2000 FiberReach NBS feature because this indicator lights during craft personnel activity with an DT Server or the CIT at the RT or when a channel unit is installed at the RT or NBS. If **CONFIG** and **NE** are both lit, the channel unit installation trouble is at the NBS. If **CONFIG** and **FE** are both lit, the channel unit installation trouble is at the RT. If only **CONFIG** and no other indicators are lit, first check RT and NBS for channel unit conflict. Then verify that the NBS contains the **DSXBIU** if an **AUA94** ISDN channel unit is used. The "**CONFIG** and **NE**" alarm pair does not light for a *SLC*-2000 HDT.

Comment: If an **AUA94** ISDN channel unit is installed in a valid ISDN slot of an NBS that contains a quad POTS channel unit in slot 6 or slot 12, the **NE** and **CONFIG** LEDs on the **DSXBIU** will light. In addition, the **FAIL** LED on the **AUA94** channel unit will light. To clear this incompatibility alarm, you must remove the ISDN channel unit. You then must remove the quad POTS channel unit to clear timeslots for the ISDN D channels (either 23 or 24). After this, you may reinsert the ISDN channel unit without generating an alarm. The last channel unit inserted generating the incompatibility alarm must be removed first.

14. If the trouble condition could not be cleared by circuit pack replacement, refer to the appropriate schematic drawing for NBS channel bank, or appropriate applications schematic) to correct NBS wiring trouble.

15. **STOP. YOU HAVE COMPLETED THIS PROCEDURE**.

Clear DSXBIU Failure Alarm

Summary:

This procedure tells how to clear an **DSXBIU** failure alarm. As a stimulus to perform this procedure, you have retrieved an DT failure alarm message from the CIT port in the *SLC*-2000 host and observed a **FAIL** LED indication on the **DSXBIU** at the NBS site. You could also have been directed to go to the NBS site by the surveillance center. If both the **FAIL** and **NE** lamps are on, we have facility problems. If the **FAIL** lamp only is on, we have a bad board.

1. Open the electronics compartment door using the 216-type tool or screwdriver.

2. Connect your ESD wrist strap to the **ESD GRD** jack located at the lower left front of the electronics compartment.

3. Verify that the **FAIL** LED on the **DSXBIU** is lit.

4. Remove the failed **DSXBIU**.

5. Obtain **DSXBIU** to be installed and inspect the unit for damage.

6. Install the replacement **DSXBIU**.

   Within one minute, the **FAIL** LED begins to quickly flash (two times/second) to indicate that the software is being downloaded. The LED should flash for approximately four hours.

7. Is the **FAIL** LED extinguished?

   If **YES**, proceed to **Step 9**.

   If **NO**, continue with **Step 8**.

8. Has the replacement unit that was installed in **Step 6** been replaced while performing this trouble procedure?

   If **YES**, escalate to next level of support.

   If **NO**, replace unit by repeating this procedure starting at **Step 5**.

9. Press **LED TEST** button on **DSXBIU**.

   Requirement: All LEDs light on **DSXBIU** and all other circuit packs.

   If all LEDs do not light, replace the **DSXBIU** .

10. Remove your wrist strap, secure the electronics compartment.

11. **STOP. YOU HAVE COMPLETED THIS PROCEDURE.**

Clear RGU Failure Alarm

Summary:

This procedure tells how to clear an **RGU** failure alarm. As a stimulus to perform this procedure, you have retrieved an DT failure alarm message from the CIT port in the *SLC*-2000 host and observed a **FAIL** LED indication on the **RGU** at the NBS site. You could also have been directed to go to the NBS site by the surveillance center. If both the **FAIL** and **NE** lamps are on, we have facility problems. If the **FAIL** lamp only is on, we have a bad board.

1. Open the electronics compartment door using the 216-type tool or screwdriver.

2. Connect your ESD wrist strap to the **ESD GRD** jack located at the lower left front of the electronics compartment.

3. Verify that the **FAIL** LED on the **RGU** is lit.
   The **NE** LED on the **DSXBIU** is also lit.

4. Is rightmost fuse blown on the faceplate of the **PCU**?

   If **YES**, replace fuse and proceed to **Step 8**.

   If **NO**, continue with **Step 5**.

5. ⚠ **CAUTION:**
   Before removing the **RGU***, unlatch the unit and wait 1 minute for capacitors to discharge.*

   Remove the failed **RGU**.

6. Locate the **RGU** to be installed and inspect the unit for damage.

7. Install the replacement **RGU**.

8. Is the **FAIL** LED extinguished?

   If **YES**, proceed to **Step 10.**

   If **NO**, continue with **Step 9.**

9. Has the replacement unit that was installed in **Step 7** been replaced while performing this trouble procedure?

   If **YES**, escalate to next level of support.

   If **NO**, replace unit by repeating this procedure starting at **Step 5**.

10. Press **LED TEST** button on **DSXBIU**.

    Requirement: **FAIL** LED lights on **RGU**.

    If LED does not light, replace the **RGU** by repeating this procedure starting at **Step 5**.

11. Measure **RGU** AC and DC ringing voltages between –**20 Hz** and **GND**.

    Requirement: AC ringing voltage: 75 to 85 V AC RMS
    DC ringing voltage: –42 to –70 V DC.

12. Measure **RGU** DC voltage between –**48V** and **GND**.

    Requirement: DC voltage: –42 to –60 V DC.

13. Were **RGU** voltage requirements met?

    If **YES**, continue with **Step 14**.

    If **NO**, replace the **RGU** by repeating this procedure from **Step 5**.

14. Remove your wrist strap, secure the electronics compartment.

15. **STOP. YOU HAVE COMPLETED THIS PROCEDURE**.

Clear CDTU Failure Alarm

Summary:

This procedure tells how to clear an **CDTU** failure alarm. As a stimulus to perform this procedure, you have retrieved a DT failure alarm message from the CIT port in the *SLC*-2000 host and observed a **FAIL** LED indication on the **CDTU** at the NBS site. You could also have been directed to go to the NBS site by the surveillance center. If both the **FAIL** and **NE** lamps are on, we have facility problems. If the **FAIL** lamp only is on, we have a bad board.

1. Open the electronics compartment door using the 216-type tool or screwdriver.

2. Connect your electrostatic discharge wrist strap to the ESD ground jack located at the lower left front of the electronics compartment.

3. Verify that the **FAIL** LED on the **CDTU** is lit.
   The **NE** LED on the **DSXBIU** is also lit.

4. Is rightmost fuse (3.0A) blown on the faceplate of the **PCU**?

   If **YES**, replace fuse and repeat **Step 3**.

   If **NO**, continue with **Step 5**.

5. Remove the failed **CDTU**.

6. Locate the **CDTU** to be installed and inspect the unit for damage.

7. Install the replacement **CDTU**.

8. Is the **FAIL** LED extinguished?

   If **YES**, proceed to **Step 10**.

   If **NO**, continue with **Step 9**.

9. Has the replacement unit that was installed in **Step 7** been replaced while performing this procedure?

   If **YES**, escalate to next level of support.

   If **NO**, replace unit by repeating this procedure starting at **Step 5**.

10. Press **LED TEST** button on **DSXBIU**.

    Requirement: **FAIL** and **BUSY** LEDs light on **CDTU**.

    If LEDs do not light, replace the **CDTU** by repeating this procedure starting at **Step 5**.

11. Remove your wrist strap, secure the electronics compartment, and replace the **ONU** outer cover.

12. **STOP. YOU HAVE COMPLETED THIS PROCEDURE**.

Clear PCU Failure Alarm

SUMMARY:

This procedure tells how to clear an **PCU** failure alarm. As a stimulus to perform this procedure, you have retrieved an alarm message from the the *SLC*-2000 host that indicates a problem at the NBS. You could also have been directed to go to the NBS site by the surveillance center or you could have observed a **FAIL** LED indication on the **PCU** at the NBS site.

1. Open the electronics compartment door using the 216-type tool or screwdriver.

2. Connect your ESD wrist strap to the **ESD GRD** ground jack located at the lower left front of the electronics compartment.

3. Verify that the **FAIL** LED on the **PCU** is lit.

4. ⚠ **CAUTION:**
   Before removing the **PCU***, unlatch the unit and wait 1 minute for capacitors to discharge.*

   Remove the failed **PCU**.

5. Locate the **PCU** to be installed and inspect the unit for damage.

6. Check for a blown fuse.

7. Ensure that fuses are installed in fuse holder on faceplate.

8. Install the replacement **PCU**.

9. Is the **FAIL** LED extinguished?

   If **YES**, proceed to **Step 11.**

   If **NO**, continue with **Step 10.**

10. Has the replacement unit that was installed in **Step 8** been replaced while performing this procedure?

    If **YES**, escalate to next level of support.

    If **NO**, replace unit by repeating this procedure starting at **Step 4**.

11. Press **LED TEST** button on **DSXBIU**.

    Requirement: **FAIL** LED lights on **PCU**.

    If LED does not light, replace the **PCU** by repeating this procedure starting at **Step 4**.

12. Measure voltage at test points –**48VDC** and –**48VDC RETURN**.

    Requirement: –42 to –60 V DC.

13. Were **PCU** voltage requirements met?

    If **YES**, continue with **Step 14.**

    If **NO**, replace **PCU** by repeating this procedure from **Step 4**.

14. Remove your wrist strap, secure the electronics compartment.

15. **STOP. YOU HAVE COMPLETED THIS PROCEDURE**.

Clear CONFIG Failure Alarm

Summary:

This procedure tells how to clear an **CONFIG** failure alarm. As a stimulus to perform this procedure, you have observed a **CONFIG** LED indication on the **DSXBIU**. This alarm indicates a configuration problem at the NBS. It may be caused by one of the following:

- Channel unit installed in an invalid slot
- Unsupported channel unit installed
- Invalid common circuit pack installed
- Incorrect configuration/mode set for the type of channel unit installed
- Other configuration conflicts

NOTE:
The **CONFIG** LED will flash when a software installation is in progress. This is not an alarm indication.

1. Open the electronics compartment door using the 216-type tool or screwdriver.

2. Connect your ESD wrist strap to the **ESD GRD** ground jack located at the lower left front of the electronics compartment.

3. Verify that the **CONFIG** and **NE** LEDs are lighted on the **DSXBIU**.

4. Using the circuit order list for this NBS, check the following:
   - Correct channel unit is installed in the correct slot.
   - Correct common units are installed.
   - Ringing generator is latched in place.
   - Channel and drop test unit is latched in place (if equipped).

5. When the trouble is cleared, remove your wrist strap, secure the electronics compartment.

6. **STOP. YOU HAVE COMPLETED THIS PROCEDURE.**

Clear CU Stuck Relay Alarm

Summary:

This procedure tells how to clear a *CU stuck relay* alarm. As a stimulus to perform this procedure, you have retrieved an DT failure alarm message from the CIT port in the *SLC*-2000 host and observed a **FAIL** LED indication on the **DSXBIU** at the NBS site. You could also have been directed to go to the NBS site by the surveillance center. If both the **FAIL** and **NE** lamps are on, we have facility problems. If the **FAIL** lamp only is on, we have a bad board.

1. Open the electronics compartment door using the 216-type tool or screwdriver.

2. Connect your electrostatic discharge wrist strap to the **ESD GRD** ground jack located at the lower left front of the electronics compartment.

3. Locate the channel unit that has the stuck relay.

4. Verify that none of the up to four drops assigned to this unit are busy.

5. Replace and test the channel unit (**NTP-005**).

6. Has the *CU stuck relay* alarm cleared?

   If **YES**, proceed to **Step 8**.
   If **NO**, continue with **Step 7**.

7. **NOTE:**
   The **CDTU** may also cause the *CU stuck relay* alarm.

   If *CU stuck relay* alarm does not clear, replace **CDTU**.

8. When the trouble is cleared, remove your wrist strap, and secure the electronics compartment.

9. **STOP. YOU HAVE COMPLETED THIS PROCEDURE**.

Clear DT Failure Alarm

Summary:

This procedure tells how to clear an DT failure alarm. As a stimulus to perform this procedure, you have retrieved a DT failure alarm message from the CIT port in the *SLC*-2000 host and observed a **FAIL** LED indication on the **DSXBIU** at the NBS site. You could also have been directed to go to the NBS site by the surveillance center. If both the **FAIL** and **NE** lamps are on, we have facility problems. If the **FAIL** lamp only is on, we have a bad board. This alarm will more than likely indicate a fault in other system facilities. However, if you go to the NBS, use the following procedure as a guide.

1. Open the electronics compartment door using the 216-type tool or screwdriver.

2. Connect your ESD wrist strap to the **ESD GRD** ground jack located at the lower left front of the electronics compartment.

3. Check the LEDs on the **DSXBIU** and the other NBS circuit packs. Change faulty circuit pack.

4. When the trouble is cleared, remove your wrist strap, secure the electronics compartment.

5. **STOP. YOU HAVE COMPLETED THIS PROCEDURE**.

Perform Visual Inspection of the Electronics Compartment

1. Open the electronics compartment door using the 216-type tool or screwdriver.

2. Verify that no plug-in units are installed in the NBS slots (Figure 1).

3. Remove any units that are installed.

4. Verify that NBS is mounted correctly and free of defects or damage.

5. Verify that there are no broken, bent, or misaligned contacts on the backplane connectors.

6. If problems exist, contact responsible installation group or call **1-800-255-RTAC** .

7. Is one channel unit plug-in of any type available?

   If **YES**, continue with **Step 8**.

   If **NO**, proceed to **Step 12**.

8. Check for a misaligned or bowed shelf by inserting a channel unit into slot 1 of NBS shelf.

9. Check that channel unit inserts properly.

10. Remove the channel unit.

11. Repeat **Step 8** thru **Step 10** for slots 6, 7, and 12 of the shelf.

12. Secure the electronics compartment door using the 216-type tool or screwdriver.

13. **STOP. YOU HAVE COMPLETED THIS PROCEDURE**.

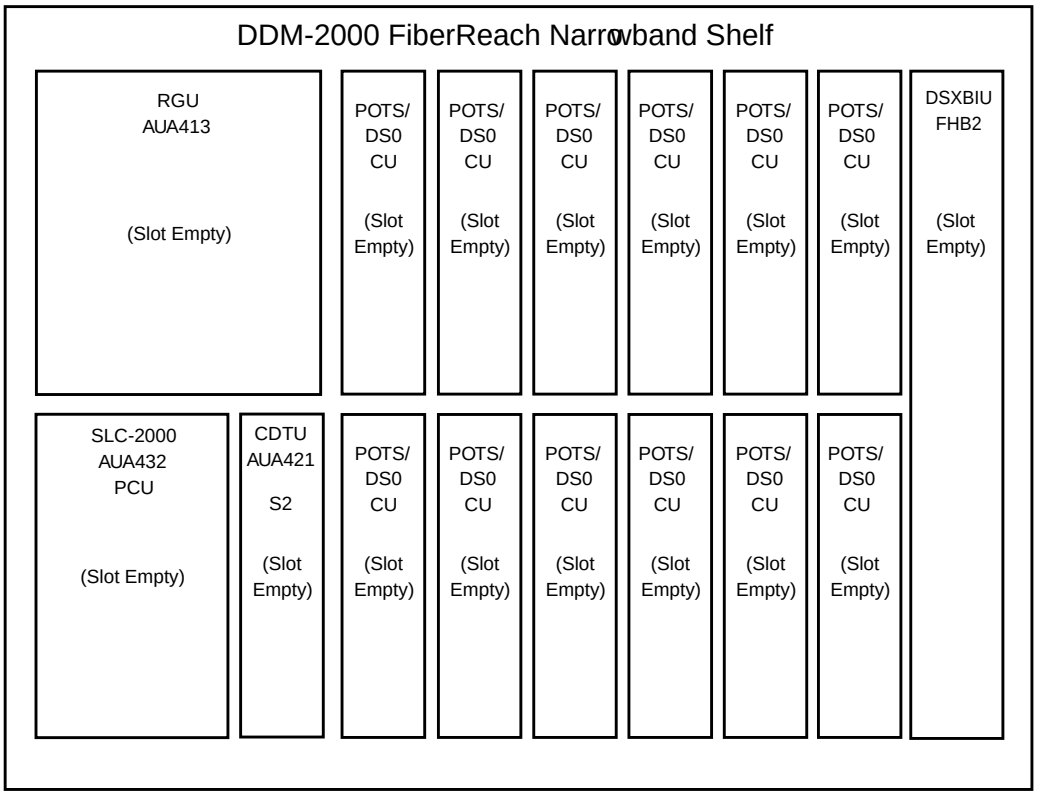

Figure 1 – DDM-2000 FiberReach Narrowband Shelf

UNUSED

Install –48 V DC Power Converter Unit (PCU) (AUA432)

Summary:

This procedure tells how to install the –48 V DC **PCU** in the **PCU** slot on the NBS.

1. Open the electronics compartment door using the 216-type tool or screwdriver.
2. Locate the mounting location for the **PCU** on the NBS (Figure 1).
3. Connect your ESD wrist strap to the **ESD GRD** ground jack located at the lower left front of NBS enclosure.
4. Locate the **PCU** to be installed.
5. Inspect the unit for damage.

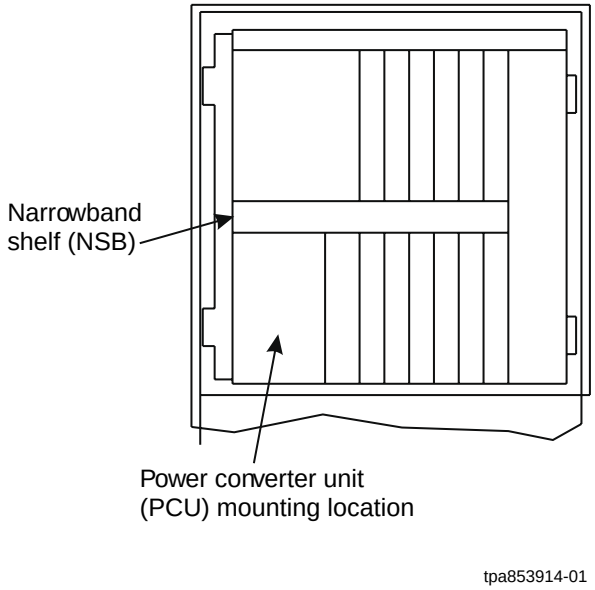

Figure 1 – Front View of Narrowband Shelf

DDM-2000 FIBERREACH NARROWBAND SHELF

6. Ensure that fuses are installed in fuse holder on faceplate (Figure 2).

7. Install unit in **PCU** slot.

8. Is **FAIL** indicator lit on **PCU**?

   If **YES**, continue with **Step 9**.

   If **NO**, proceed to **Step 12**.

9. ⚠ **CAUTION:**
   Before removing the **PCU** *from the narrowband shelf, unlatch the unit and wait 1 minute for capacitors to discharge.*

   Replace **PCU**.

10. Is **FAIL** indicator lit?

    If **YES**, continue with **Step 11**.

    If **NO**, proceed to **Step 12**.

11. Contact the responsible installation group to locate and repair wiring troubles.

12. Measure voltage at test points –**48VDC** and –**48VDC RETURN** (Figure 2).

    Requirement: –42 V to –60 V DC.

13. Were **PCU** voltage requirements met?

    If **YES**, continue with **Step 14**.

    If **NO**, repeat this procedure from **Step 9**.

14. If you are not continuing with the turn up procedure, disconnect your wrist strap, secure the electronics compartment door.

15. **STOP. YOU HAVE COMPLETED THIS PROCEDURE.**

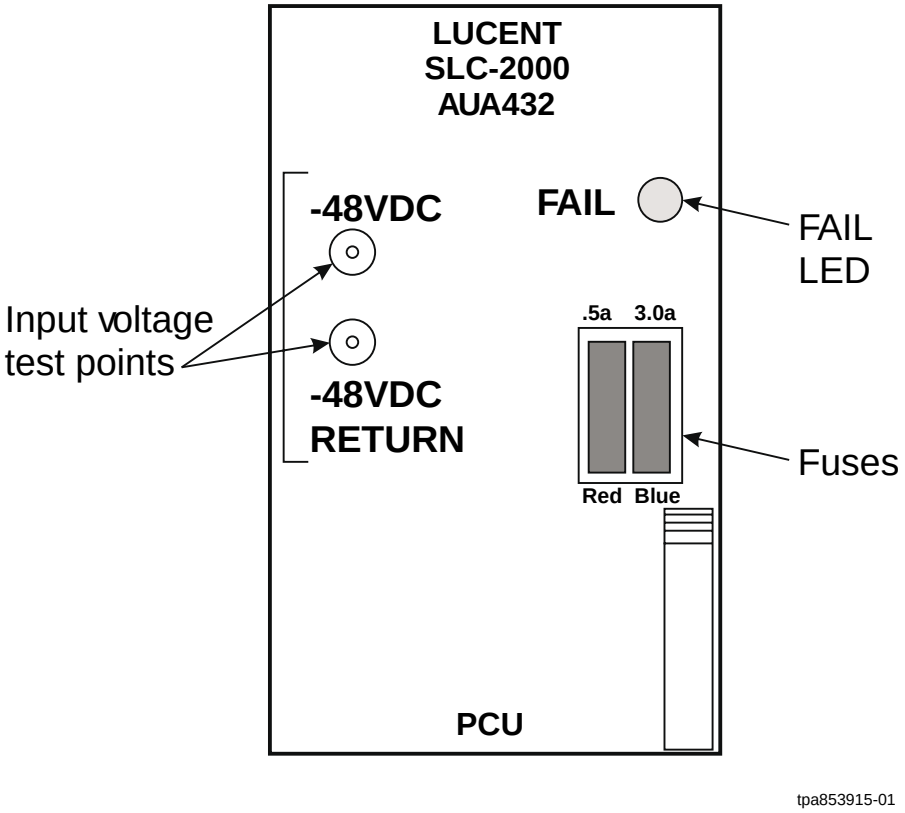

Figure 2 – –48 V DC AUA432 PCU

Install Ringing Generator Unit (RGU) (AUA413/AUA423)

Summary:

This procedure tells how to install the **RGU** in the **RGU** slot on the NBS.

1. Open the electronics compartment door using the 216-type tool or screwdriver.
2. Locate the mounting location for the **RGU** on the NBS (Figure 1).
3. Connect your ESD wrist strap to the **ESD GRD** ground jack located at the lower left front of the NBS enclosure.
4. Locate the **RGU** to be installed.
5. Inspect the unit for damage.

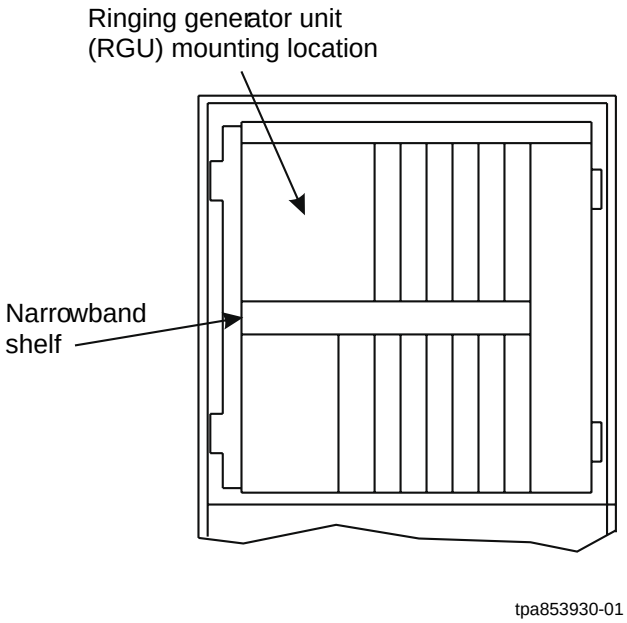

Figure 1 – Front View of Narrowband Shelf

6. Install unit in **RGU** slot.

7. Is **FAIL** indicator lit on **RGU**?

   If **YES**, continue with **Step 8**.

   If **NO**, proceed to **Step 11**.

8. ⚠ **CAUTION:**
   Before removing the **RGU** *from the narrowband shelf, unlatch the unit and wait 1 minute for capacitors to discharge.*

   Replace the **RGU**.

9. Is **FAIL** indicator lit?

   If **YES**, continue with **Step 10**.

   If **NO**, proceed to **Step 11**.

10. Contact the responsible installation group to locate wiring troubles.

11. Measure **RGU** AC and DC ringing voltages between –**20 Hz** and **GND**.

    Requirement: AC ringing voltage: 75 to 85 V AC RMS
    DC ringing voltage: –42 to –70 V DC.

12. Measure **RGU** DC voltage between –**48V** and **GND**.

    Requirement: DC voltage: –42 to –60 V DC.

13. Were **RGU** voltage requirements met?

    If **YES**, continue with **Step 14**.

    If **NO**, repeat this procedure from **Step 8**.

14. If you are not continuing with the turn up procedure, disconnect your wrist strap, secure the electronics compartment door, and replace the NBS enclosure.

15. **STOP. YOU HAVE COMPLETED THIS PROCEDURE.**

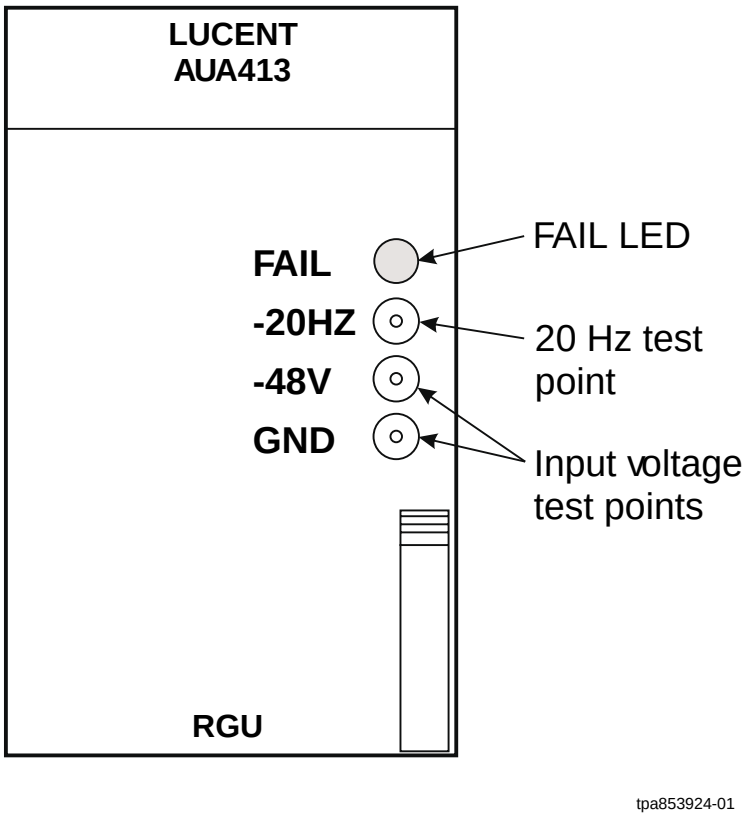

Figure 2 – AUA413 RGU

Install Channel Units (CU)

Summary:

This procedure tells how to install **CU**s in the NBS (Figure 1).

1. **NOTE:**
   Before performing this procedure, verify that the the following common units (**DSXBIU**, **PCU**, **RGU**, and **CDTU** [optional]) are installed in NBS and NBS shelf has no alarms.

   Open the electronics compartment door using the 216-type tool or screwdriver.

2. Connect your ESD wrist strap to the **ESD GRD** ground jack located at the lower right front of the NBS enclosure.

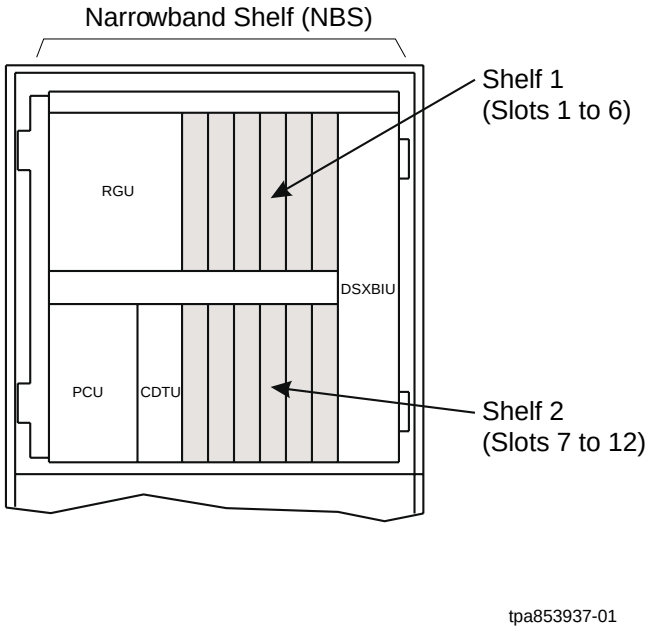

Figure 1 – Front View of Narrowband Shelf

3. Locate the 2 channel unit shelves labeled slots 1-12 or shel -1 [1-6], shelf-2 [1-6] in the NBS (Figure 1).

4. From work order, determine the shelf and the channel unit slot for the channel unit to be installed.

5. Install the channel unit in the appropriate shelf and slot.

6. Normally, there will be no alarms. But if the **NE** LED lights on the **DSXBIU** or the **NE** and the **CONFIG** LEDs light on the **DSXBIU**, perform step A or B:

   A. If only the **NE** LED is lit, replace the channel unit.

   B. If both **NE** and **CONFIG** lamps are lit, the channel unit just installed is not compatible with the system configuration. Remove the incompatible channel unit and verify the assignment with the work order.

7. Repeat **Step 5** for each channel unit to be installed.

8. Update records per local practice.

9. If you are not continuing with the turn up procedure, disconnect your wrist strap, secure the electronics compartment door.

10. **STOP. YOU HAVE COMPLETED THIS PROCEDURE**.

Install Digital Signal Cross-Connect Backplane Interface Unit (DSXBIU) (FHB2)

Summary:

This procedure tells how to install the **DSXBIU** in the **DSXBIU** slot on the NBS.

1. Open the electronics compartment door using the 216-type tool or screwdriver.
2. Locate the mounting location for the **DSXBIU** on the NBS (Figure 1).
3. Connect your ESD wrist strap to the **ESD GRD** ground jack located at the lower left front of the NBS enclosure.
4. Locate the **DSXBIU** to be installed.
5. Inspect the unit for damage.

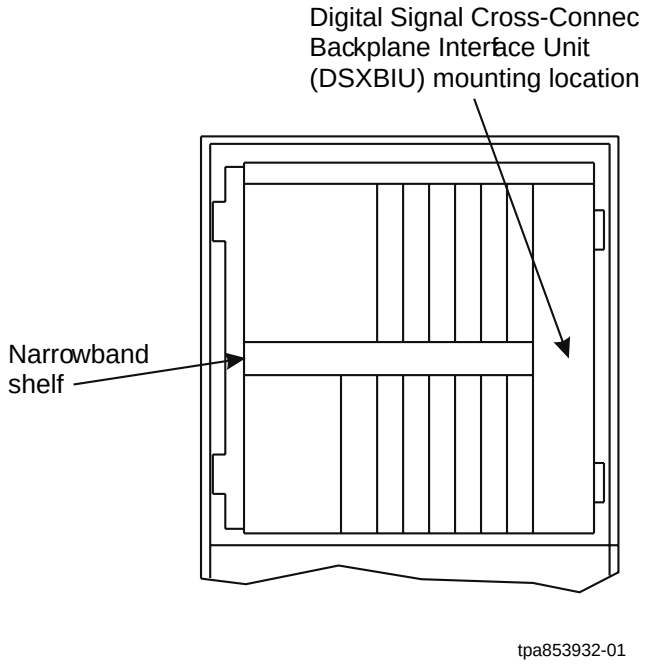

Figure 1 – Front View of Narrowband Shelf

DDM-2000 FIBERREACH NARROWBAND SHELF

CAUTION:
Take care to avoid damaging the LEDs that protrude through the opening in the faceplate of the **FHB2 DSXBIU** *circuit pack.*

Determine from office records the length of the DS1 cabling between the Narrowband shelf and the DSX-1 cross-connect point.

6. **NOTE:**
Switch 2, sections 2 through 4 (**S2-2, S2-3, S2-4**), are set according to the length of DS1 cabling between the Narrowband shelf and the DSX-1 cross-connection. Switch 2, section 1 (**S2-1**), is set for the type of line coding (B8ZS or AMI) required of the DS1 signal.

NOTE:
To set switch to ON, depress rocker or slide switch toward side labeled **ON** in the figure. To set switch to OFF, depress rocker or slide switch toward side labeled **OFF**.

Refer to Table A and set Equalization option switches.

Table A – FHB2 DSXBIU Cable Equalization Settings

Distance to DSX-1 (Feet)	Switch S2 Settings		
	S2-2	S2-3	S2-4
0 to 133	OFF	OFF	OFF
>133 to 267	OFF	OFF	ON
>267 to 400	OFF	ON	OFF

7. Refer to Table B and set the line code option switch..

Table B – FHB2 DSXBIU Line Code Settings

Line Code Format	Switch S2 Setting
	S2-1
B8ZS	ON
AMI/ZCS	OFF

8. Install unit in **DSXBIU** slot.

9. Wait 30 seconds for initialization. The **FAIL** and the **NE** light should be lit.

10. Is only the **FAIL** indicator lit on **DSXBIU**?

    If **YES**, continue with **Step 11**.

    If **NO**, proceed to **Step 17**.

11. Replace the **DSXBIU**.

12. Is **FAIL** indicator still the only light lit on **DSXBIU**?

    If **YES**, continue with **Step 13**.

    If **NO**, proceed to **Step 17**.

13. Replace **DSXBIU** and perform the following to clear condition indicator:
    - Replace **PCU**.

14. Is **FAIL** indicator still the only light lit on **DSXBIU**?

    If **YES**, continue with **Step 15**.

    If **NO**, proceed to **Step 17**.

15. Contact the responsible installation group to locate wiring troubles.

16. **STOP. YOU HAVE COMPLETED THIS PROCEDURE.**

17. **NOTE:**
    The LEDs stay lit for approximately 10 to 15 seconds after **LED TEST** pushbutton is released.

    Press **LED TEST** pushbutton on **DSXBIU** (Figure 2).

    Response: All LEDs light on the **DSXBIU**, **PCU**, **RGU**, and **CDTU**.

18. Do all indicators light?

    If **YES**, then continue with **Step 19**.

    If **NO**, replace circuit pack(s) that contain indicators that do not light and repeat LED test.

    If **NO RESPONSE**, replace **DSXBIU** and repeat from **Step 9** of this procedure.

    If **NO** or **NO RESPONSE** after replacement, contact the responsible installation group to clear wiring trouble.

19. If you are not continuing with the turn up procedure, disconnect your wrist strap, secure the electronics compartment door, and replace the NBS enclosure.

20. **STOP. YOU HAVE COMPLETED THIS PROCEDURE.**

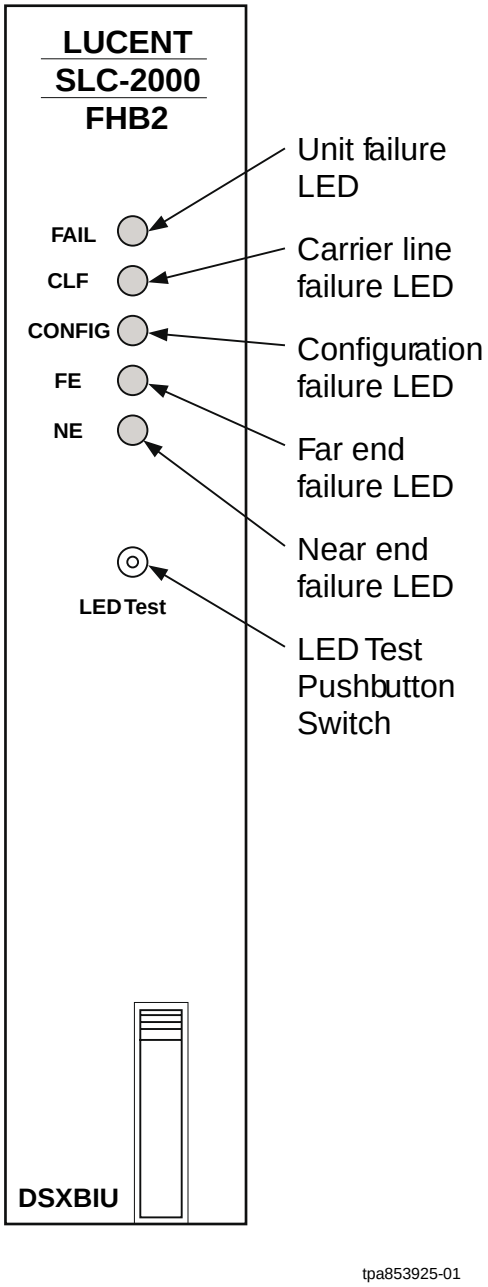

Figure 2 – Faceplate of DSXBIU

Install Channel and Drop Test Unit (CDTU) (AUA421)

Summary:

This procedure tells how to install the **CDTU** in the **CDTU** slot on the NBS.

1. Remove the outer NBS enclosure and open the electronics compartment door using the 216-type tool or screwdriver.

2. Locate the mounting location for the **CDTU** on the NBS (Figure 1).

3. Connect your ESD wrist strap to the **ESD GRD** ground jack located at the lower left front of the NBS enclosure.

4. Obtain the **CDTU** to be installed.

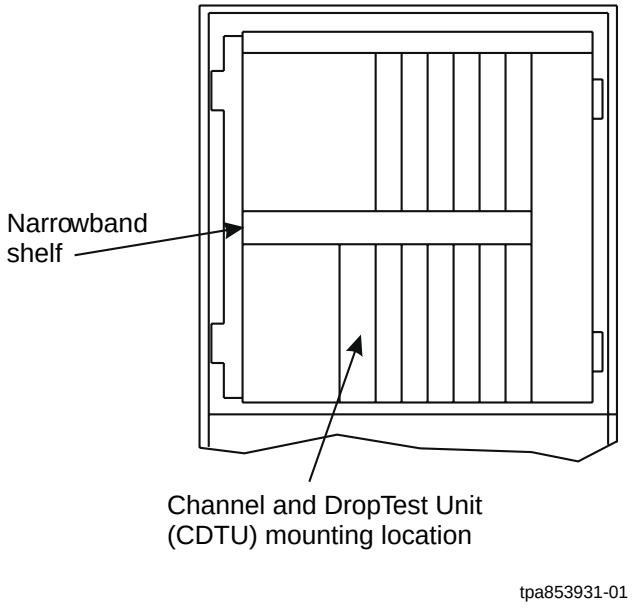

Figure 1 – Front View of Narrowband Shelf

5. Inspect the unit for damage.

6. Install unit in **CDTU** slot.

   Response: **FAIL** indicator lights momentarily, then goes out.

7. Is **FAIL** indicator lit on **CDTU** (Figure 2)?

   If **YES**, continue with **Step 8**.

   If **NO**, proceed to **Step 11**.

8. Replace the **CDTU**.

   Response: **FAIL** indicator lights momentarily, then goes out.

9. Is **FAIL** indicator lit?

   If **YES**, continue with **Step 10**.

   If **NO**, proceed to **Step 11**.

10. Contact the responsible installation group to locate and repair wiring trouble.

11. **NOTE:**
    The LEDs stay lit for approximately 10 to 15 seconds after **LED TEST** pushbutton is released.

    Press **LED TEST** on **DSXBIU** and verify that the all indicators light on NBS shelf.

12. Do all indicators light?

    If **YES**, proceed to **Step 17**.

    If **NO**, continue with **Step 13**.

13. Replace the **CDTU** and repeat LED test.

    Response: **FAIL** indicator lights momentarily, then goes out.

14. Do all indicators light?

    If **YES**, proceed to **Step 17**.

    If **NO**, continue with **Step 15**.

15. Replace **DSXBIU** and repeat LED test.

16. Do all indicators light?

    If **YES**, continue with **Step 17**.

    If **NO**, contact responsible installation group to clear wiring trouble.

17. If you are not continuing with the turn up procedure, disconnect your wrist strap, secure the electronics compartment door, and replace the NBS enclosure.

18. **STOP. YOU HAVE COMPLETED THIS PROCEDURE**.

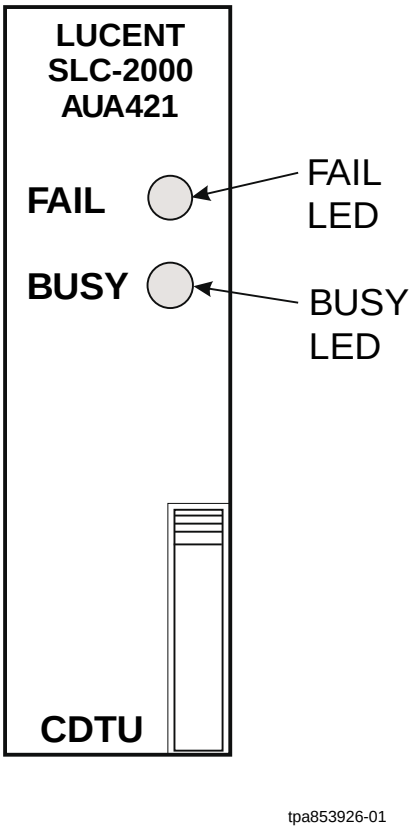

Figure 2 – AUA421 CDTU

Test NBS Drops 1-24 (Shelf 1) and 1-24 (Shelf 2)

Summary:

This procedure uses ***SPQ* 400 QUAD POTS** or equivalent channel units to test the channel facility from the local digital switch (LDS) to the drop TB1 or comparable access block. The loop-start function is used for this test. At the local digital switch (LDS), verify that the channel service and telephone number assignments have been made for the drops (1-24 [Shelf 1] and 1-24 [Shelf 2]) being tested. At the NBS, locate the channel unit slots on the narrowband shelves and connections on TB1 or comparable access block. Connect a test telephone with the ringer set for bridged ringing to the drop terminal connections. Make dialing, ringing, talking, and ring-trip tests on each of the four drops.

1. At the LDS, verify that the logical line number (LLN) is assigned to the proper type of service and that there is an assigned telephone number for the circuit under test.

2. At the HDT, verify that the T0 cross-connects are provisioned.

3. At the NBS, remove the outer enclosure and open the electronics compartment door using a 216-C tool or screwdriver.

4. Connect your electrostatic discharge wrist strap to the ESD ground jack located at the lower left front of the NBS enclosure.

5. Locate slot 1 on shelf 1 of the NBS (Figure 1).

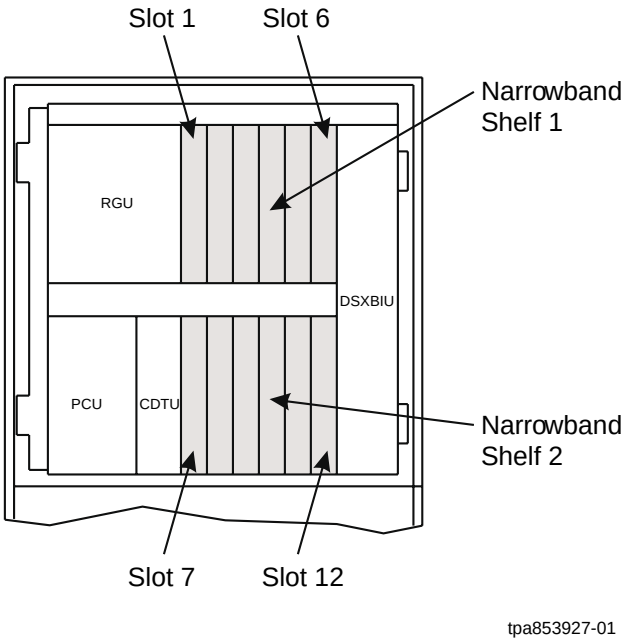

Figure 1 – Front View of Narrowband Shelf

6. Locate the channel unit to be installed.

   Comment: One channel unit can provide service for four drops, if using quad, *SLC*5 and specials are 1 or 2.

7. Install the channel unit in slot 1 of shelf 1.

   Normally, there will be no alarms. But if the **NE** LED lights on the **DSXBIU** or the **NE** and the **CONFIG** LEDs light on the **DSXBIU**, the following steps should be performed:

   A. If only the **NE** LED is lit, replace the channel unit.

   B. If both **NE** and **CONFIG** lamps are lit, the channel unit just installed is not compatible with the system configuration. Remove the incompatible channel unit and verify the assignment with the work order.

8. Locate the drop terminal access door on the side of the NBS.

9. Access the telephony field TB1 by turning the two nylon fasteners one-quarter of a turn in the clockwise direction.

10. Locate TB1 (Figure 2).

11. Set the test telephone for bridged ringing.

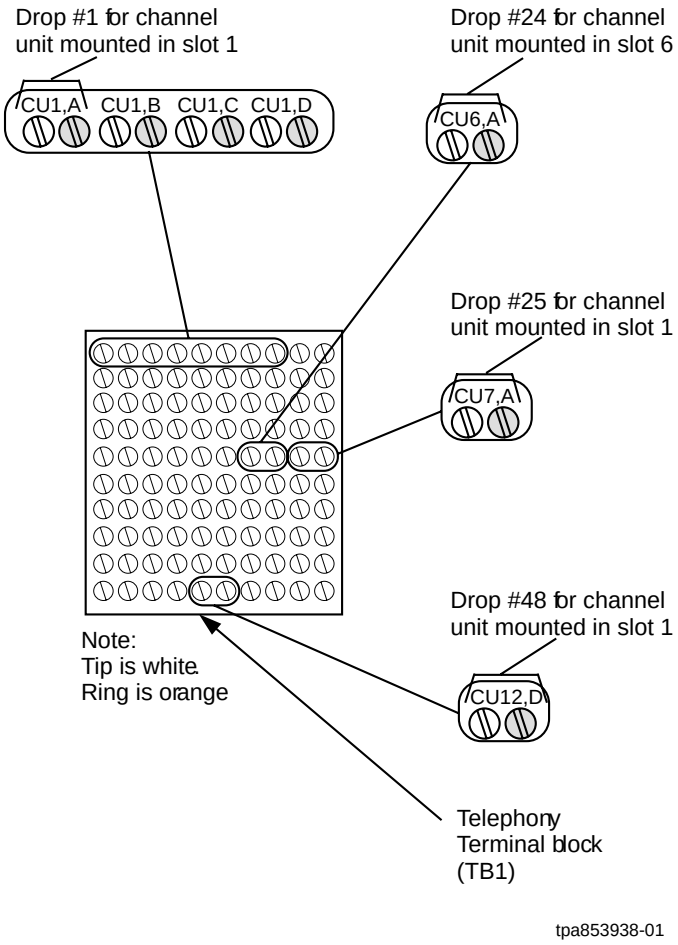

Figure 2 – Location of TB1 Terminals.

12. **NOTE:**
    The terminal block designation **CU1,A** through **CU1,D** corresponds to the four drops coming from the channel unit mounted in Slot 1. Likewise, **CU6,D** corresponds to the fourth drop coming from the channel unit mounted in Slot 6; **CU7,A** corresponds to the first drop coming from the channel unit mounted in Slot 7; and **CU12,D** corresponds to the fourth drop coming from the channel unit mounted in Slot 12. The terminal assignments for all 12 shelf slots are shown on the inside of the drop terminal block access door.

    Connect the test telephone to the tip (white) and ring (orange) terminals of **CU1,A** (Figure 3).

13. Get a volt-ohm-meter (VOM) and condition it to measure DC volts.

14. Connect the (+) red lead of the VOM to the tip conductor and the (–) black lead to the ring conductor of the test telephone.

    Requirement: –48.0 V DC for POTS or loop-start *SPOTS*

15. Does the VOM indicate –48.0 V DC?

    If **YES**, proceed to **Step 19**.

    If **NO**, continue with **Step 16**.

16. Check test connections and verify you are set up for loop-start function. If the indication is still not –48.0 V DC, replace the channel unit.

17. Does the VOM indicate –48.0 V DC?

    If **YES**, proceed to **Step 19**.

    If **NO**, continue with **Step 18**.

18. Use enclosure drawings to check wiring. Look for a tip and ring reversal between the NBS backplane and TB1. Verify the LDS channel and number assignments. Correct the problem before continuing with the next step.

19. Lift the test telephone handset off the hook.

20. Does the meter indicate between –4 and –15 V DC?

    If **YES**, proceed to **Step 24**.

    If **NO**, continue with **Step 21**.

21. Has the channel unit been replaced for this test (off hook voltage check)?

    If **YES**, proceed to **Step 23**.

    If **NO**, continue with **Step 22**.

22. Check the test connections and correct them if needed. If the indication is not –4 to –15 V DC, replace the channel unit and repeat from **Step 16.**

23. Use enclosure drawings to check wiring. Look for a tip and ring reversal between the NBS backplane and TB1. Verify the LDS channel and number assignments. Correct the problem before continuing with the next step.

24. Is dial tone present?

    If **YES**, proceed to **Step 28**.

    If **NO**, continue with **Step 25**.

25. Has the channel unit been replaced for this test (check dial tone)?

    If **YES**, proceed to **Step 27**.

    If **NO**, continue with **Step 26**.

26. Check test connections and correct them if needed. If no dial tone is present, replace the channel unit and repeat from **Step 16**.

27. Use enclosure drawings to check wiring. Look for a tip and ring reversal between the NBS backplane and TB1. Also check T0 cross connects and verify the LDS channel and number assignments. Correct the problem before continuing with the next step.

28. From the test telephone, make a talk test by dialing a test number.

29. Was the call completed with normal transmission quality in both directions?

    If **YES**, proceed to **Step 33**.

    If **NO**, continue with **Step 30**.

30. Has the channel unit been replaced for this test (talk test)?

    If **YES**, proceed to **Step 32**.

    If **NO**, continue with **Step 31**.

31. Replace the channel unit and repeat from **Step 16**.

32. Use enclosure drawings to check wiring. Look for a tip and ring reversal between the NBS backplane and TB1. Also check T0 cross connects and verify the LDS channel and number assignments. Correct the problem before continuing with the next step.

33. While watching the VOM, put the handset on the hook.

34. After 3 seconds, does the meter indicate –48.0 V DC?

    If **YES**, proceed to **Step 36**.

    If **NO**, continue with **Step 35**.

35. Replace the channel unit and repeat from **Step 16**.

36. Have someone dial or you dial the telephone number of the test telephone.

37. Does the test telephone ring normally?

    If **YES**, proceed to **Step 39**.

    If **NO**, continue with **Step 38**.

38. At the LDS, verify that the correct directory number has been assigned to LLN under test. After the problem has been resolved, repeat from **Step 36**.

39. Lift the telephone handset during the ringing period of the ringing cycle.

40. Does the ringing trip normally?

    If **YES**, proceed to **Step 42**.

    If **NO**, continue with **Step 41**.

41. Replace the channel unit and repeat from **Step 16**.

42. Is this the last drop to be tested?

    If **YES**, proceed to **Step 44**.

    If **NO**, continue with **Step 43**.

43. Disconnect the test telephone and remove the VOM leads from TB1. Verify the channel service and telephone number assignments for the next drop to be tested. Repeat this procedure from **Step 6** for drops 24, 25, and 48.

44. Disconnect the test telephone, remove the VOM leads from TB1, secure the drop terminal access door, electronics compartment door.

45. **STOP. YOU HAVE COMPLETED THIS PROCEDURE**.

Set Options on *SPQ*810/811 DT Server For Use With FR NBS

General:

The ***SPQ*810/811** DT Server is used to provide support for the FiberReach NBS. Each NBS supports a total of 48 tip-ring pairs which are assigned by provisioning the DT server to each DSX-1 signal feeding a V - DT in the NBS (see Figures 1 and 2) to any one of the following two modes:

Quad Mode: The Quad Mode requires 2 DS1 servers. The **DSXBIU** continuously attempts to find or frame-up on the DS1 input, establish the message link, alarm any DS1 faults, and provide service to a set of six channel unit slots in the NBS. You can provision the quad mode for 24- or 12- line service, supporting 24 or 12 tip-ring pairs, respectively.

Octet Mode: The Octet Mode requires 4 DS1 servers. The **DSXBIU** continuously attempts to find or frame-up on the DS1 input, establish the message link, alarm any DS1 faults, and provide service to a set of three channel unit slots in the NBS. In the octet mode, each channel unit slot can support eight time slots (DS0s) instead of the four time slots (DS0s) supported in the quad mode. The octet mode allows the use of the maximum number of ten ISDN lines per quadrant in the NBS when using the ***SPQ*494** quad ISDN channel units along with the **AUA94** dual ISDN channel units. You can provision the octet mode for 24-line service only. In octet mode, each server supports 12 tip-ring pairs only.

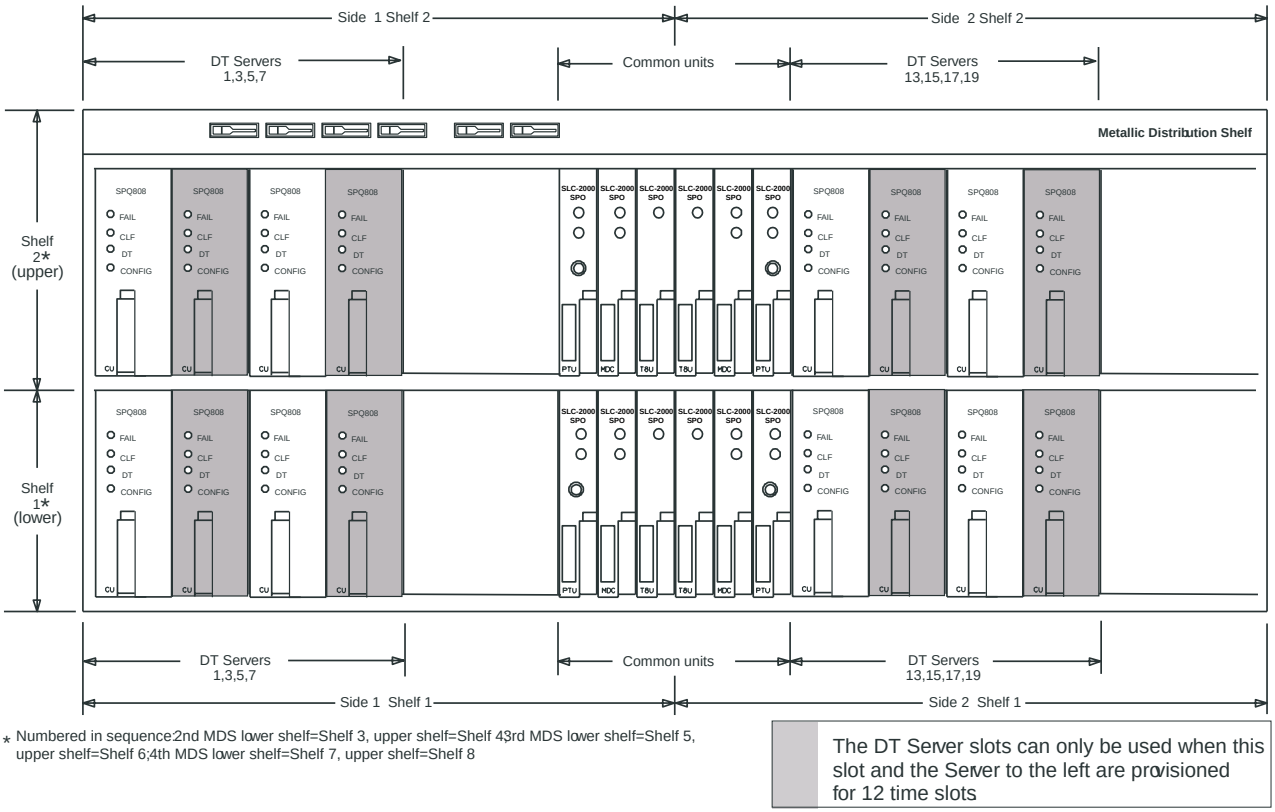

Figure 1 – MDS Assembly -- 12- and 24-Line FITL Configuration (Release 4.4)

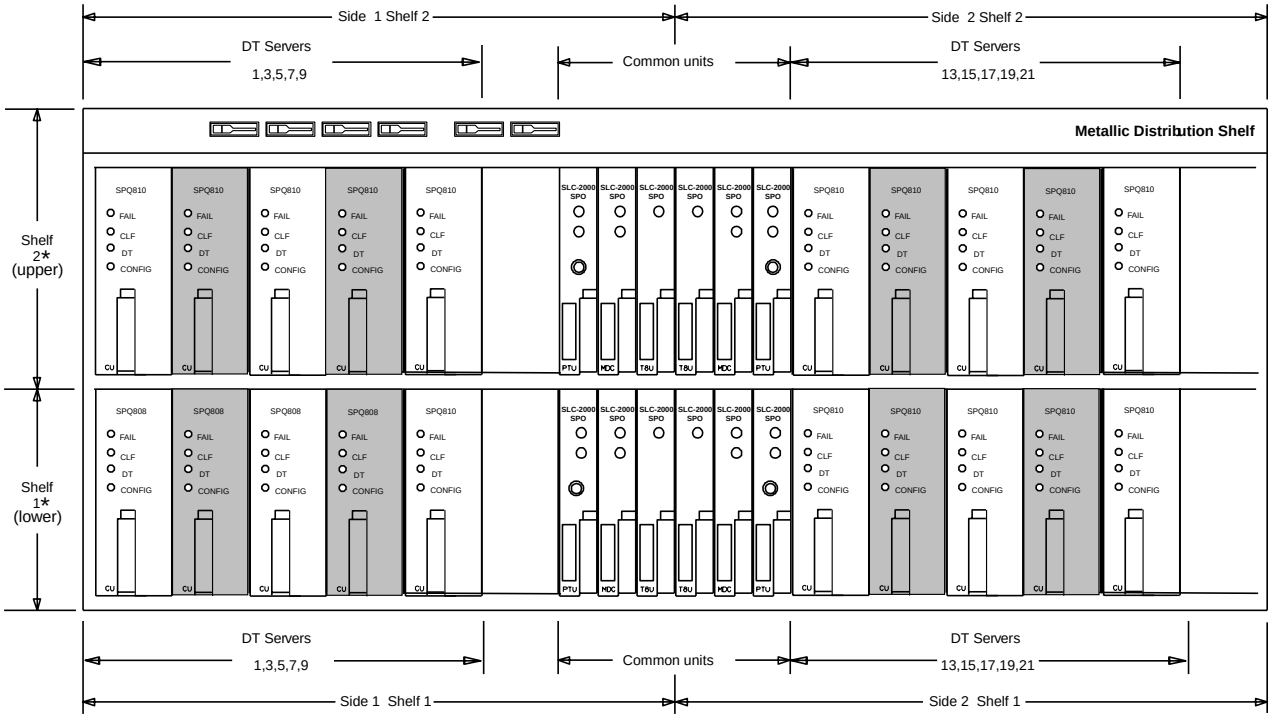

Numbered in sequence: 2nd MDS lower shelf=Shelf 3, upper shelf=Shelf 4; 3rd MDS lower shelf=Shelf 5, upper shelf=Shelf 6; 4th MDS lower shelf=Shelf 7, upper shelf=Shelf 8

These DT Server slots can only be used when this slot and the Server to the left are provisioned for 12 time slots.

tpa853928-01

Figure 2 – MDS Assembly -- 12- and 24-Line FITL Configuration (Release 4.5 or Later)

The following is a list of DT Server alarm indicators:

FAIL	The DT Server pack has failed self-diagnostic tests.
CLF	Communication with the NBS is lost.
DT	Trouble with equipment in the NBS.
CONFIG	Placement of a channel unit in the wrong slot or an error in the SLOT ALLOCATION option setting on the DT Server channel unit. Correct placement or SLOT ALLOCATION option setting to clear **CONFIG** alarm. If the DT Server is installed per work order, record the digroup channel unit equipage and refer the trouble to the engineering center. If **CONFIG** and **DT** are both on, the channel unit installation trouble is at the NBS.

1. The ***SPQ*810/811** DT Server (Figure 3) is being connected to a NBS.

2. Set the **OU/DSX** option to **DSX** (toward gold fingers).

3. Set the **B/Z** option to **B** option only.

4. Set the DSX equalization **TRANS-0,1,2** options as required (see Table A).

5. Refer to **DLP-616** in 363-208-001, *SLC-2000 Access System User/Service Manual* for details on further provisioning and installation of the DT server.

6. **STOP. YOU HAVE COMPLETED THIS PROCEDURE**.

Table A – Equalization Option Settings

Trans-2	1	0	Distance toDSX-1 (Feet) (Note)
OFF	OFF	ON	0 to 132
OFF	ON	OFF	133 to 265
OFF	ON	ON	266 to 398
ON	OFF	OFF	399 to 532
ON	OFF	ON	533 to 655

Note: These distances are for ABAM cable used in the central office. Refer to document 915-710-115 for calculations for other types of cable used for collocated RT and T1 extension applications.

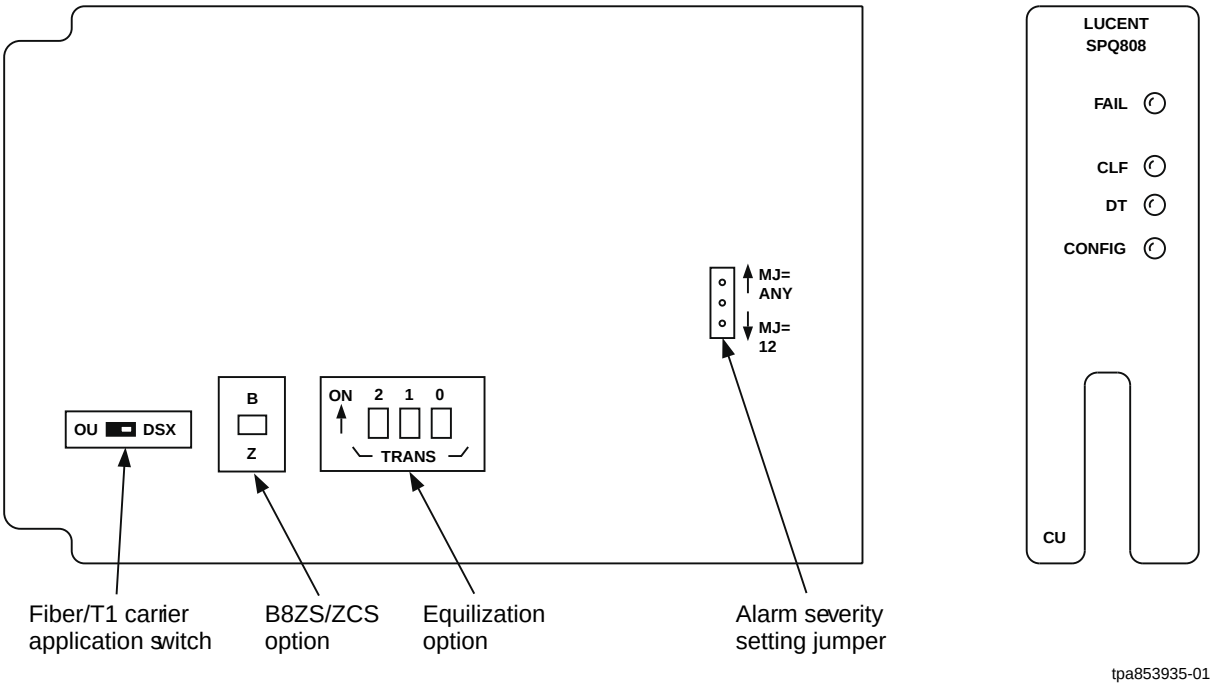

Figure 3 – *SPQ*810/811 Option Switches

UNUSED

UNUSED

Perform DDM-2000 NBS MLT Channel Test

Summary:

Channel testing for NBS circuits is supported by MLT using a DC test pair connected to the RT via PairGain test controller (PGTC), test bus control unit (TBCU), or a derived DC test PairGain provided by a remote measurement unit (RMU) capable of returning a DC delta signature provided by the DT Server at the RT. The extended test controller (XTC) is supported only when connected in the PGTC emulation mode and the special features of the XTC are unavailable.

Channel testing for the NBS circuits in an integrated *SLC*-2000 Access System is supported by MLT but not XTC or PGTC. The test bus control unit (TBCU) connects the DC test pair or RMU to perform the bypass test as previously mentioned.

When a channel test is performed, the MLT identifies the circuit as being served by a *SLC* Carrier System. Then two tests are initiated. The first test performs channel unit functional tests, and the second test bypasses the carrier system [using a DC test pair or remote measurement unit (RMU)] and returns a DC delta signature from the DT Server that indicates the result of the attempted channel tests performed by the CDTU at the NBS.

MLT has no means of obtaining metallic access to the copper drop which connects to the NBS. This situation is handled by having the CDTU in the NBS measure the characteristics of the copper drop, then reporting the results using DC programmable signatures. When a test is run, the DT Server at the RT returns a DC signature (Table A) to the MLT. A DC signature with 44K ohms or less Tip-to-Ring indicates a good HDT to NBS facility. A DC signature of 1000K ohms or more Tip-to-Ring indicates a failure condition associated with the HDT to NBS facility; trouble clearing should begin at the HDT site. A DC signature of less than 24K ohms may indicate a trouble condition at the NBS or customer equipment/wiring. A failed DC signature indicates the RT unit has failed or the signal between the RT and NBS is bad.

1. **NOTE:**
   After a fullx or loopx test, a channel test from STV should be performed.

   Perform the MLT test on the NBS circuit reported to have trouble but do not perform the tone test.

   Comment: You should note the results of the DC tests during the loop test phase of the channel test.

   Comment: If you perform the tone test, the results will be intermittent return tones.

2. Refer to Table A and perform the appropriate action according to the result of the MLT test signature.

3. **STOP. YOU HAVE COMPLETED THIS PROCEDURE.**

Table A – *SLC*-2000 DT Feature DC Signatures for Drop Tes

DC Signature (Resistance T-R) (Ohms)	Indication	Dispatch To
15K-24K	HDT/NBS link up and NBS common equipment failure or NBS not equipped for testing	NBS
24K-34K	HDT/NBS link up and FEMF on drop	NBS
34K-44K	HDT/NBS link up and drop test OK	As indicated by channel test
44K-54K	HDT/NBS link up and drop open	NBS
54K-64K	HDT/NBS link up and resistive fault	NBS
64K-74K	HDT/NBS link up and receiver off hook (ROH)	NBS or customer premises
74K-86K	HDT/NBS link up and hazardous potentials on drop	NBS
>1000K	HDT/NBS link down	HDT

End-to-End Testing

Summary:

At CO equipment, determine channel and directory number of channel being tested. At DDM-2000 NBS, determine corresponding channel. At NBS, connect a test telephone set with ringer connected for bridged ringing to channel being tested. Make talking, dialing, ringing, and ring-trip tests on at least one channel per NBS.

1. Establish communication between craft personnel at the NBS and CO.

2. At the CO equipment, select a channel slot to be tested and determine/assign directory number of channel. Inform craft personnel at the NBS of channel selected.

3. **NOTE:**
   Test telephone set should be connected for bridged ringing. Test calls should be made from protector block.

   At NBS, install a single-party channel unit (***SPQ* 400/440**) into the channel unit slot that coincides with the channel being tested and temporarily connect a test telephone set to the channel.

   Response: CO test line and NBS telephone are connected.

4. At NBS, lift handset and check for dial tone.

5. Is dial tone present at NBS?

   If **YES**, proceed to **Step 9**.

   If **NO**, continue with **Step 6**.

6. Request CO personnel to review line assignment to ensure correct test number. If line assignment is correct, check test connections at NBS and correct if needed. If dial tone is still not present, replace NBS channel unit and check for dial tone.

7. Is dial tone present at NBS?

   If **YES**, proceed to **Step 9**.

   If **NO**, continue with **Step 8**.

8. Use CO and NBS schematic drawings (SDs) to check wiring. Use office drawings to check CO wiring. Look for tip and ring reversal between NBS protector block terminal; also check COT channel appearance and office equipment if universal. If any alarms exist in DT Server or **DSXBIU**, correct them and continue until dial tone is present.

9. At NBS, dial local MDF or CO number and make talk tests.

10. Was call completed with transmission in both directions?

    If **YES**, proceed to **Step 14**.

    If **NO**, continue with **Step 11**.

11. Replace NBS channel unit and repeat talk tests (then replace COT channel unit if universal).

12. Was call completed with transmission in both directions?

    If **YES**, proceed to **Step 14**.

    If **NO**, continue with **Step 13**.

13. Use CO and NBS schematic drawings (SDs) to check wiring. Use office drawings to check CO wiring. Look for tip and ring reversal between NBS protector block terminal; also check COT channel appearance and office equipment if universal. Correct wiring and repeat **Step 9** until communication is good in both directions.

14. At CO, dial test line number to ring telephone at NBS.

15. At NBS, does test telephone ring normally?

    If **YES**, proceed to **Step 19**.

    If **NO**, continue with **Step 16**.

16. Check for tip and ring reversal.

    If **OK**, continue with **Step 17**.

    If **NOT OK**, proceed to **Step 18**.

17. Verify that the **RGU FAIL** indicator is not lit and ringing voltage is present (see **DLP-508** for requirements). Then replace, one at a time: NBS channel unit first and then CO channel unit. Repeat this procedure from **Step 4** after each replacement.

18. Correct tip and ring reversal error at CO and NBS, and repeat from **Step 14**.

19. At NBS, lift telephone handset during ringing.

20. At NBS, does ringing trip normally?

    If **YES**, proceed to **Step 22**.

    If **NO**, continue with **Step 21**.

21. Verify that the **RGU FAIL** indicator is not lit and ringing voltage is present (see **DLP-508** for requirements). Then replace, one at a time: NBS channel unit first and then CO channel unit. Repeat this procedure from **Step 4** after each replacement.

22. At NBS, get volt-ohm-milliammeter (VOM) and condition it to measure DC volts.

23. Make sure test call is established and held between CO and NBS.

24. At NBS, connect (+) red lead of VOM to tip terminal and (–) black lead to ring terminal of DT test telephone.

25. At NBS, does meter indicate between 4 V and 15 V DC?

    If **YES**, proceed to **Step 31**.

    If **NO**, continue with **Step 26**.

26. Check NBS test connections and correct them if needed.

27. At NBS, does meter now indicate between 4 V and 15 V DC?

    If **YES**, proceed to **Step 31**.

    If **NO**, continue with **Step 28**.

28. Replace NBS channel unit for channel being tested. If meter still does not indicate between 4 V and 15 V, replace CO channel unit.

29. At NBS, does meter now indicate between 4 V and 15 V DC?

    If **YES**, proceed to **Step 31**.

    If **NO**, continue with **Step 30**.

30. Use CO and NBS SDs to check wiring. Check CO wiring.

31. At NBS, disconnect VOM meter.

32. Is this the last designated channel unit slot to be tested?

    If **YES**, continue with **Step 33**.

    If **NO**, repeat from **Step 2**.

33. Is MLT type testing available for use in testing channels?

    If **NO**, proceed to **Step 42**.

    If **YES**, continue with **Step 34**.

34. Request that Repair Service Bureau or Local Test Desk perform necessary MLT type channel tests.

35. Did tests pass?

    If **YES**, proceed to **Step 41**.

    If **NO**, continue with **Step 36**.

36. Check test connections and correct them if needed. Replace NBS channel unit (if universal, replace COT channel unit) and repeat **Step 34**.

37. Did tests pass?

    If **YES**, proceed to **Step 41**.

    If **NO**, continue with **Step 38**.

38. Make sure MLT interface equipment is working properly and that you are using proper procedures. Repeat **Step 34** and then proceed to **Step 39.**

39. Did tests pass?

    If **YES**, proceed to **Step 41**.

    If **NO**, continue with **Step 40**.

40. Use office drawings and CO SDs to check wiring. Check for tip and ring reversal between CO channel appearance and office equipment, as well as between NBS protector block connect terminal. Correct wiring problem, repeat **Step 34** until tests pass, and then proceed to **Step 41**.

41. Is this the last designated channel unit slot to be tested with MLT type system?

    If **YES**, continue with **Step 42**.

    If **NO**, proceed to **Step 34**.

42. At NBS, remove test telephone. At CO, remove test line.

43. **STOP. YOU HAVE COMPLETED THIS PROCEDURE**.

Determine *SLC*-2000 DT Server Arrangement

Summary:

These steps can be used to find the relationships between remote terminal (RT) digroup channel positions and the associated *SLC*-2000 NBS equipment. See Figures 1 and 2 to find the RT circuit of interest. Use Table A to find the carrier system channel circuit of interest and the associated channel positions in the associated *SLC*-2000 NBS drop channel protectors at the NBS.

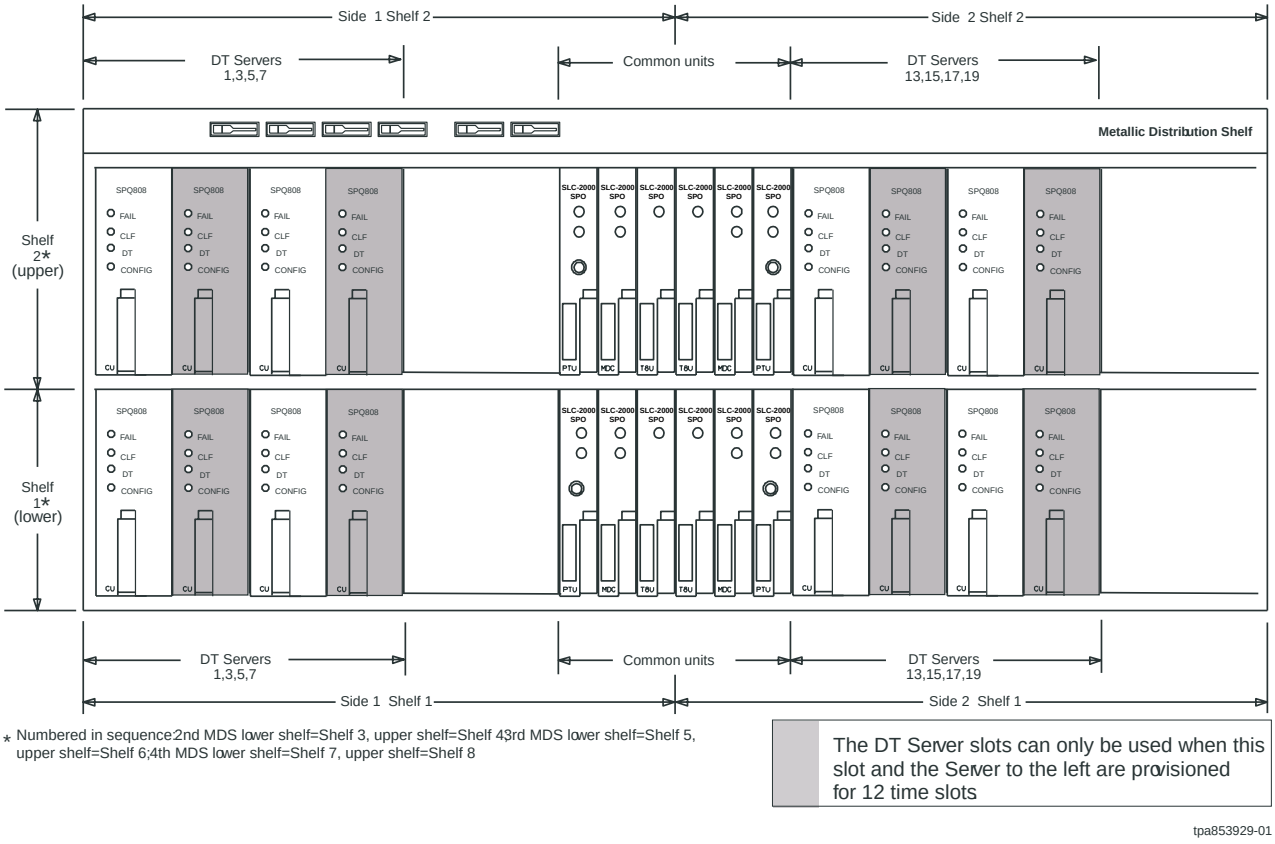

Figure 1 – First Metallic Distribution Shelf Assembly, Fiber Distribution (Release 4.4)

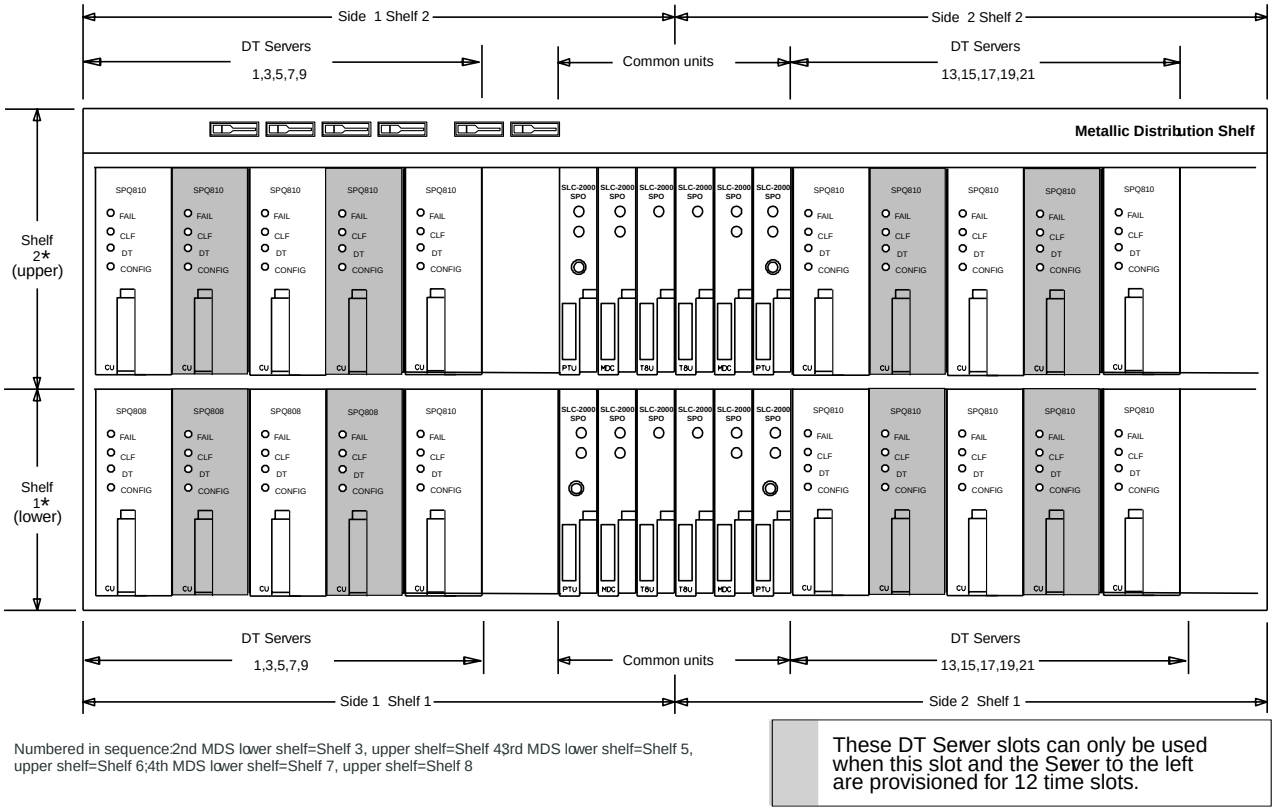

Figure 2 – First Metallic Distribution Shelf Assembly, Fiber Distribution (Release 4.5 or Later)

1. Refer to Table A to determine channel time slots served by DT channel unit slots and the associated drop protectors.

2. **STOP. YOU HAVE COMPLETED THIS PROCEDURE**.

Table A — *SLC*-2000 FITL TR-08 Channel Time Slots Served by the DT Channel Unit Slots

DT Server Slot (lines/DT)	Channel Time Slots Served					
	DTCU 1(7)	DTCU 2(28)	DTCU 3(9)	DTCU 4(10)	DTCU 5(11)	DTCU 6(12)
CU 1 (24 lines)	1-4	5-8	9-12	13-16	17-20	21-24
CU 5	25-28	29-32	33-36	37-40	41-44	45-48
CU 13	49-52	53-56	57-60	61-64	65-68	69-72
CU 17	73-76	77-80	81-84	85-88	89-92	93-96
CU 1 (12 lines)	1-4	5-8	9-12	—	—	—
CU 3	13-16	17-20	21-24	—	—	—
CU 5	25-28	29-32	33-36	—	—	—
CU 7	37-40	41-44	45-48	—	—	—
CU 13	49-52	53-56	57-60	—	—	—
CU 15	61-64	65-68	69-72	—	—	—
CU 17	73-76	77-80	81-84	—	—	—
CU 19	85-88	89-92	93-96	—	—	—
DT drop protector	1-4	5-8	9-12	13-16	17-20	21-24
CIT AIDs* dropID#	1 to 4	1 to 4	1 to 4	1 to 4	1 to 4	1 to 4

* The craft interface terminal (CIT) access identifier (AID) has the syntax of

`dtdp-shelf#-physical slot # in HDT-physical slot in DT-dropID#`

where:

`shelf#` is the digital loop carrier (DLC) system or shelf number {1-8}

`Physical slot # in HDT` is the slot for the DT Server {1,3,5,7,13,15,17,19}

`physical slot in DT` is the physical slot in the DT {1-6}

`dropID#` is the channel number in the DT slot {1-4} as given above.

Rear Access to the Wall DT Cabinet

Summary:

These steps can be used to access the Wall DT Cabinet to service the DDM-2000 FiberReach Wall Distant Terminal.

1. Remove the four attachment screws from the front of the Wall DT as shown in Figure 1.

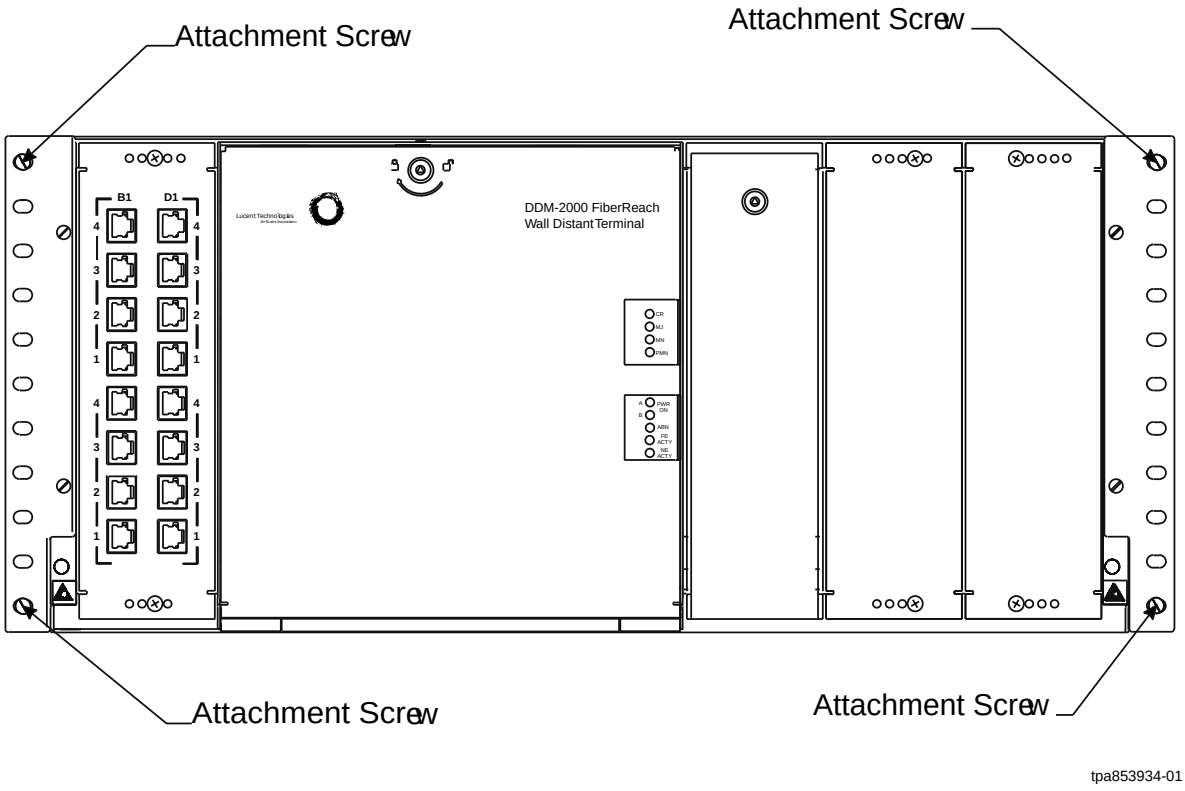

Figure 1 – Wall DT Cabinet — Front View

2. With both hands on the bottom of the Wall DT, carefully lift up on the Wall DT so the pivot point leaves the service position, and slide the Wall DT forward until the pivot point reaches the rotation position. Allow the pivot point to drop down into the rotation position, and rotate the Wall DT 90 degrees until the backplane is in the up position (see Figure 2).

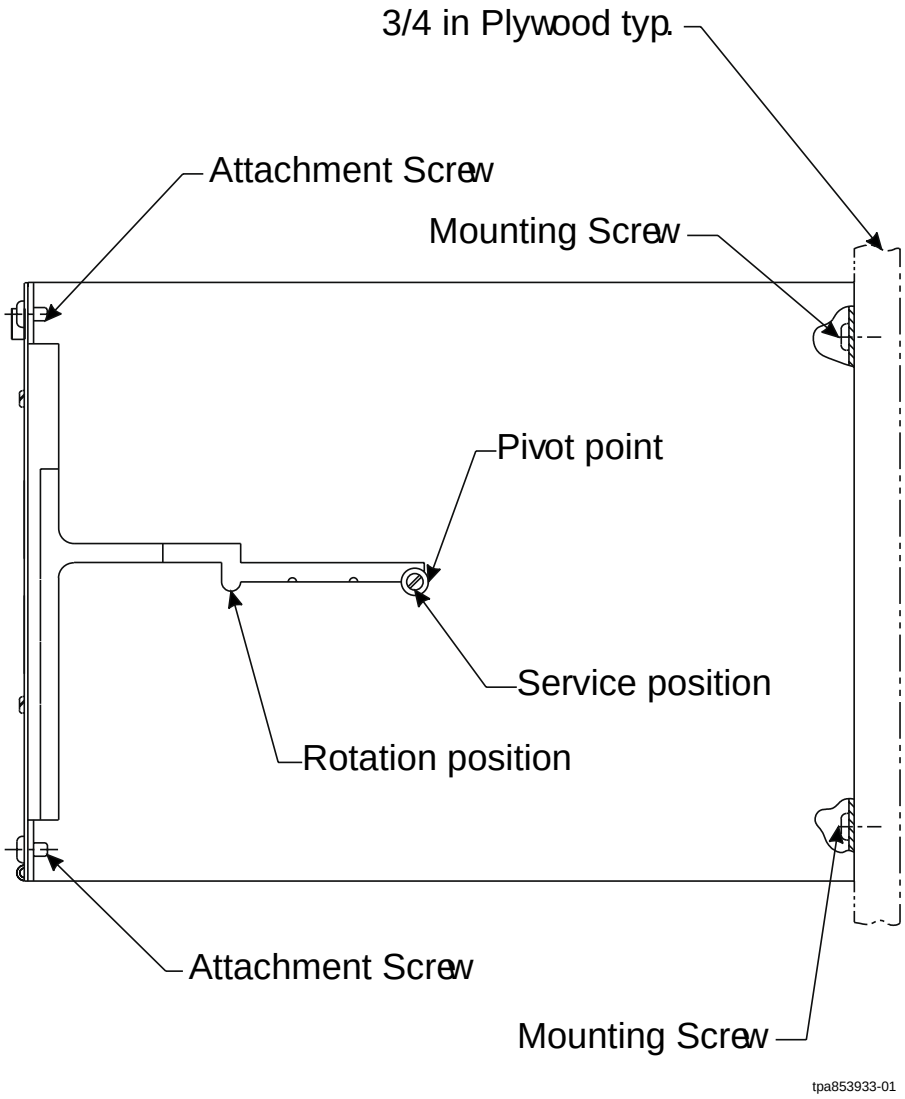

Figure 2 – Wall DT Cabinet — Bottom View

3. **NOTE:**
   Make sure that there are no circuit packs stored loose in the shelf, and that all operating circuit packs are securely latched in position.

   NOTE:
   Never leave the Wall DT unattended in the rotated position. Always return it to the service position and reinstall at least the top attachment screws.

   NOTE:
   When ever sliding or rotating the Wall DT make sure that the DS1 cabling is not crimped or stressed in any way.

   Carefully rotate the Wall DT 90 degrees until the Wall DT is in the normal position. With both hands on the bottom of the Wall DT, carefully lift up on the Wall DT so the pivot point leaves the rotation position, and slide the Wall DT back until the pivot point reaches the service position. Allow the pivot point to drop down into the service position (see Figure 2).

4. Reinstall the four attachment screws that were removed from the front of the Wall DT in Step 1.

Perform Visual Inspection of the Secured Area Telecommunications Applications Cabinet (STAC)

1. Verify that the STAC Cabinet is not damaged (see Figure 1).

2. If problems exist, contact responsible installation group.

3. Verify that there are no broken, bent, or misaligned contacts on the backplane connectors.

4. If problems exist, contact responsible installation group.

5. Is one channel unit plug-in of any type available?

   If **YES**, continue with **Step 6**.

   If **NO**, proceed to **Step 9**.

6. Check for a misaligned or bowed shelf by inserting a channel unit in the leftmost and rightmost channel unit slots of top shelf. Remove the channel unit.

7. Check for a misaligned or bowed shelf by inserting a channel unit in the leftmost and rightmost channel unit slots of bottom shelf.

8. Remove the channel unit.

9. **STOP. YOU HAVE COMPLETED THIS PROCEDURE**.

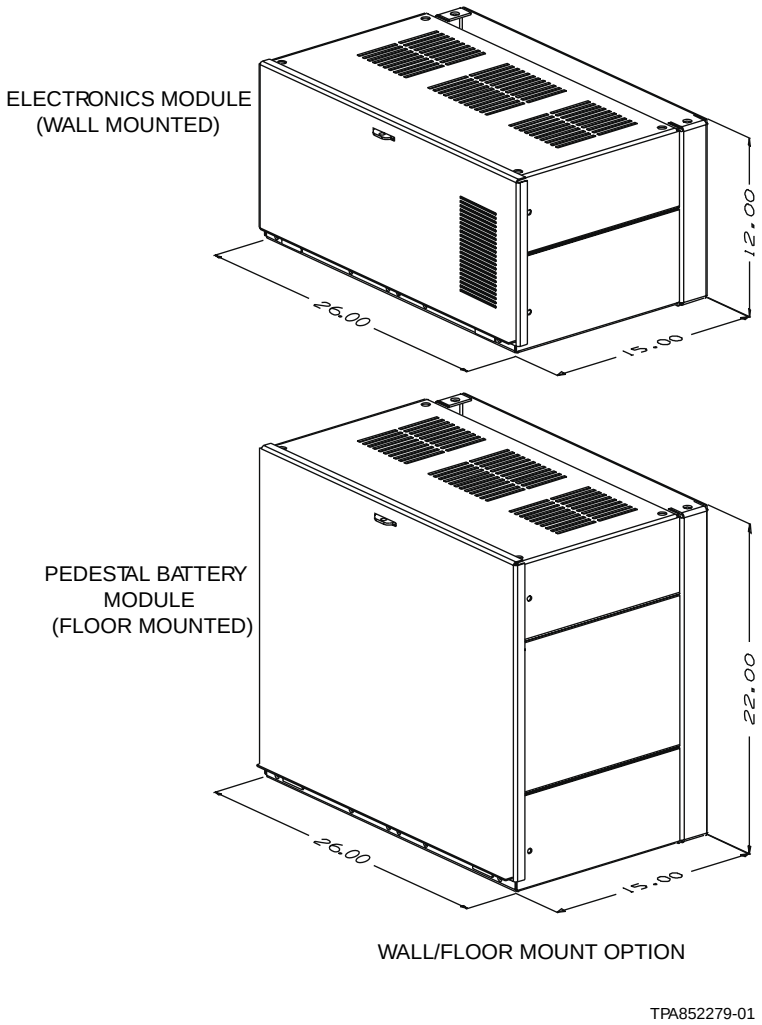

Figure 1 – DDM-2000 FiberReach STAC Cabinet