800PGY and 800PHY Blue Test Cords Description and Applications

Contents

Contents	Page
1. Overview	1
2. Description	2
3. Application	4
4. References	7

Figures

1.	800RGY and 800RHY Cords	2
2.	800RGY and 800RHY Blue Test Cord Schematic	3
3.	800G and 800H Single Adapter Test Cord Schematic	4
4.	Typical DSX Monitoring Configuration for Point-of-Interface (POI)	5
5.	Alternate DSX Monitoring Configuration for Point-of-Interface (POI)	5
6.	Typical DSX Configuration for Loop Applications	6
7.	Alternate DSX Configuration for Loop Applications	6

Tables

A.	Ordering Information	2

1. Overview

1.01 This practice covers the description and applications for the 800PGY and 800PHY Blue Test Cords.

1.02 Whenever this practice is reissued, the reason(s) for reissue will be listed in this paragraph.

1.03 This practice does contain admonishments.

1.04 AT&T welcomes your comments on this practice. Your comments will aid us in improving the quality and usefulness of AT&T documentation. Please use the feedback form provided at the end of this practice.

1.05 Additional copies of this practice and associated appendixes may be ordered from the AT&T Customer Information Center as follows:

- Call 1-800-432-6600

or

Complete Form IND 1-80.80 and mail to:

AT&T Customer Information Center
Attention: Order Entry Department
2855 N. Franklin Road
P. O. Box 19901
Indianapolis, IN. 46219-1999

1.06 The **800PGY** and **800PHY** Blue Test Cords look at the **cross-connect side** of an 800/900-Series jack. These Blue Test Cords offer increased flexibility and operational efficiency for any 800/900-Series DSX system. They are compatible with all previous versions of the 800/900-Series DSX panels and blocks.

Copyright © 1991 AT&T
All Rights Reserved
Printed in U.S.A.

1.07 This practice is issued by:

Document Development Organization
AT&T Network Systems
2400 Reynolda Road
Winston-Salem, NC 27106-4696

2. Description

2.01 The ordering information for the "Blue" test cords available is provided in Table A. The "Blue" cords have a blue colored 800-type duplex plug at one end and two longframe (310) or two bantam plugs on the other end (see Figure 1).

Table A. Ordering Information

Apparatus Code	Comcode	Description
800 PGY/6	106463243	6 ft. (1.8 m) Blue Test Cord (310-version)
800 PGY/12	106463235	12 ft. (3.6 m) Blue Test Cord (310-version)
800 PHY/6	106463268	6 ft. (1.8 m) Blue Test Cord (Bantam-version)
800 PHY/12	106463250	12 ft. (3.6 m) Blue Test Cord (Bantam-version)

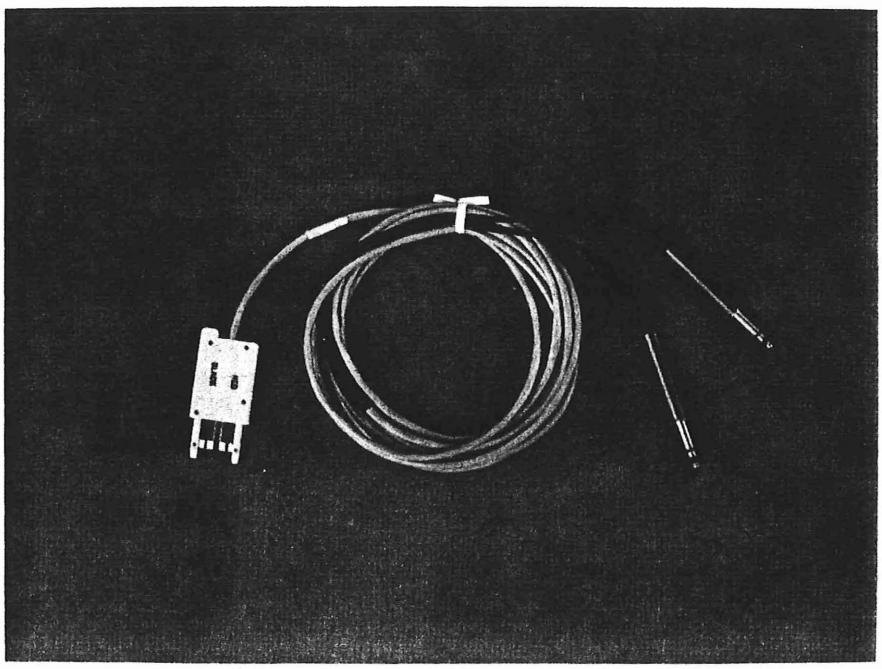

Figure 1. 800PGY and 800PHY Cords

2.02 These Blue Test Cords along with the standard 800GY and 800HY White Test Cords allow full testing of a DS1/1C circuit from a single jack location. Plugging into the **IN** and **OUT** jacks with these Blue Test Cords establishes a transmission path throught the cross-connect to the digital equipment at the far end, while disconnecting the transmission path to the digital equipment terminated on the back of the block. (See Figure 2.) This is the exact opposite of what happens when a standard 800GY or 800HY White Test Cord is inserted. (See Figure 3.) A unique benefit of using the Blue Test Cord is that you include all of the cross-connect wire and tie-pair cabling in the test, a capability not available from longframe (310) or bantam-type plugs.

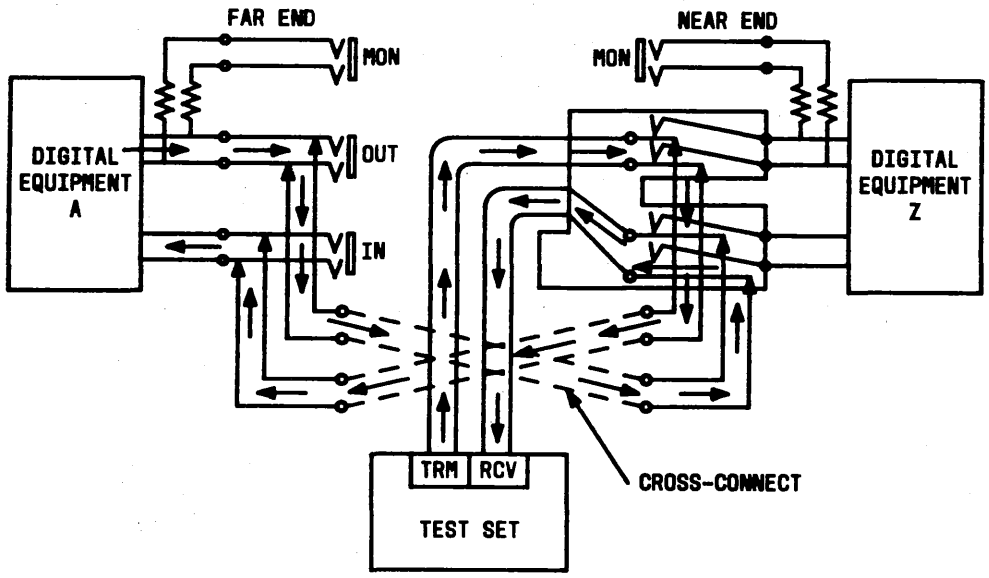

Figure 2. 800PGY and 800PHY Blue Test Cord Schematic

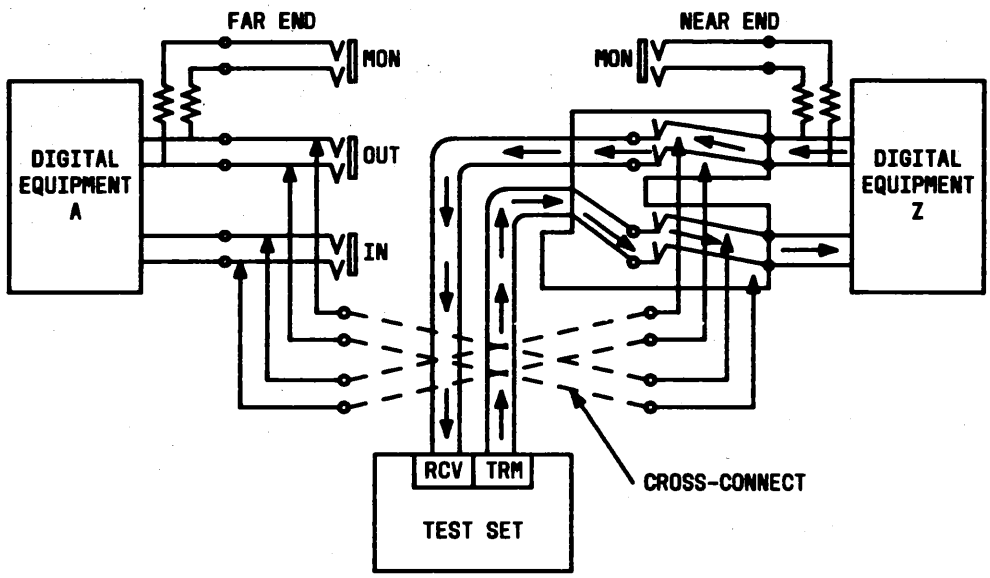

Figure 3. 800GY and 800HY White Test Cord Schematic

3. Applications

3.01 Use of the 800PGY and 800PHY Blue Test Cords in applications where Intra-Office Repeaters (IORs) are used can have significant operational and cost savings, such as:

1. Multiple lineups where *active* (repeatered) ties are needed due to loss limitations.
2. Handoff between the Local Exchange Carrier (LEC) and the Inter Exchange Carrier (IEC) where IORs may or may not be used.

3.02 Typical DSX configuration for these applications use standard 800/900 jack panels for termination of the IORs (Figure 4). This allows test access and sectionalization capabilities, with standard White Test Cords, for the IOR. With the addition of the 800PGY or 800PHY Blue Test Cord to the 800/900-Series DSX product line, the IORs can be terminated on less-expensive tie-panels (800G2-E2). The tie panel allows high density termination (300 terminations vs. 80/90 terminations per shelf) with a considerable cost savings. The 800PGY or 800PHY Blue Test Cord will allow test access and sectionalization capabilities of the (*cross-connected*) IOR. (See Figure 5.)

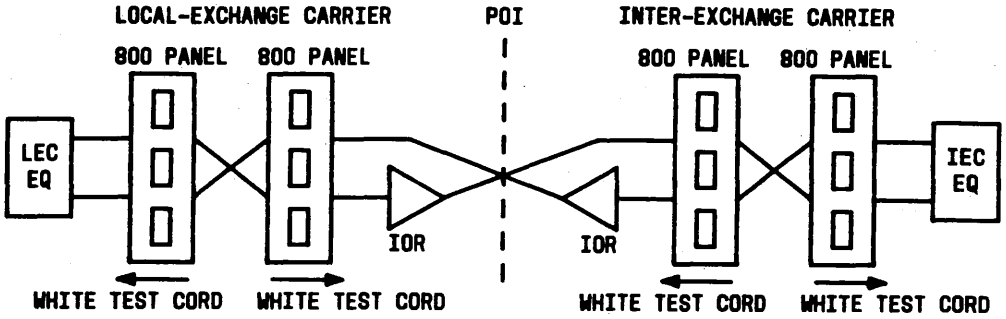

Figure 4. Typical DSX Monitoring Configuration for Point-of-Interface (POI)

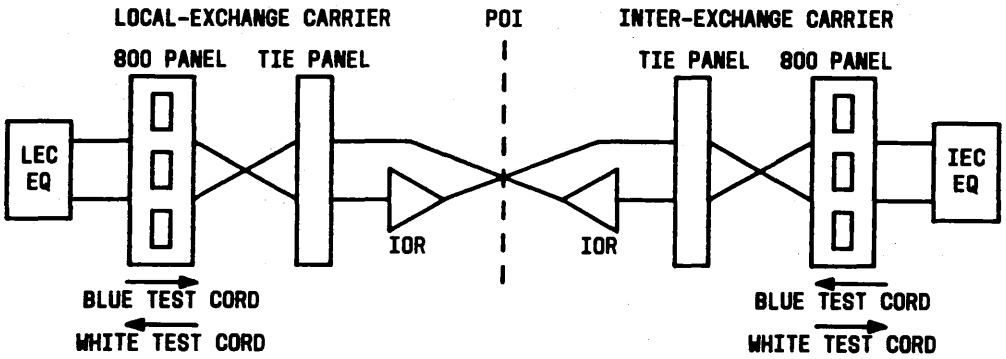

Figure 5. Alternate DSX Monitoring Configuration for Point-of-Interface (POI)

3.03 The application illustrated in Figures 6 and 7 is similar to the IOR application. It involves termination of a T1 Monitoring System. The typical DSX configuration uses 800/900 jack panels allowing test access and sectionalization capabilities with standard White Test Cords. (See Figure 6.) With the addition of the 800PGY or 800PHY Blue Test Cord, the T1 Monitoring System can be terminated on tie panels (800G2-E2). The tie panel allows high density termination (300 terminations vs. 80/90 terminations per shelf) with significant operational and cost savings. The 800PGY or 800PHY Blue Test Cord will allow test access and sectionalization capabilities of the cross-connected T1 Monitoring System. (See Figure 7.)

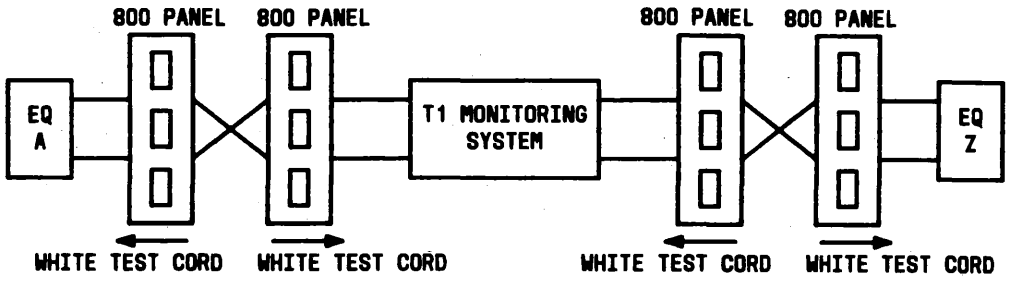

Figure 6. Typical DSX Configuration for Loop Applications

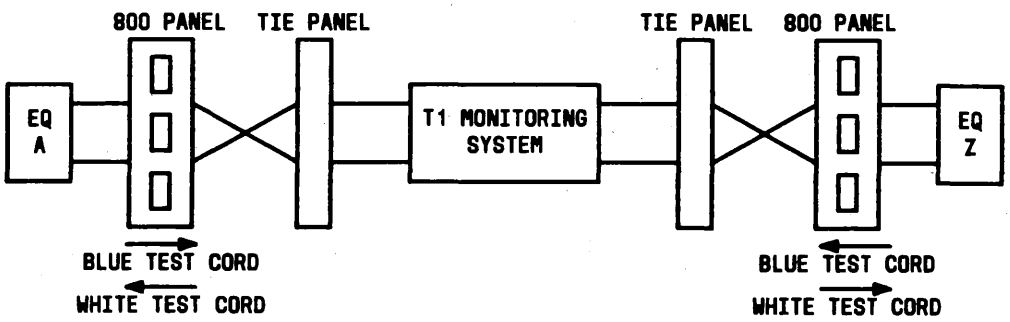

Figure 7. Alternate DSX Configuration for Loop Applications

4. References

Number	Title
AT&T 201-099-024TD	*Distributing Frame Systems 800PGY and 800PHY ("Blue") Cord 800RGY and 800RHY ("Orange") Cord*
AT&T 365-301-102-7	*800-Type Patch Cords (Plugs)*

How Are We Doing?

Document Title: 800PGY and 800PHY Blue Test Cords
Description and Applications

Document Number: 365-301-104 Issue Number: 1 Publication Date: August 1991

AT&T welcomes your feedback on this document. Your comments can be of great value in helping us improve our documentation.

1. Please rate the effectiveness of this document in the following areas:

	Excellent	Good	Fair	Poor	Not Applicable
Ease of Use					//////////////
Clarity					//////////////
Completeness					//////////////
Accuracy					//////////////
Organization					//////////////
Appearance					//////////////
Examples					
Illustrations					
Overall Satisfaction					//////////////

2. Please check the ways you feel we could improve this document:

- ☐ Improve the overview/introduction
- ☐ Improve the table of contents
- ☐ Improve the organization
- ☐ Include more figures
- ☐ Add more examples
- ☐ Add more detail
- ☐ Make it more concise
- ☐ Add more step-by-step procedures/tutorials
- ☐ Add more troubleshooting information
- ☐ Make it less technical
- ☐ Add more/better quick reference aids
- ☐ Improve the index

Please provide details for the suggested improvement. _____

3. What did you like most about this document?

_____

4. Feel free to write any comments below or on an attached sheet.

_____

If we may contact you concerning your comments, please complete the following:

Name: _____ Telephone Number: _____

Company/Organization: _____ Date: _____

Address: _____

When you have completed this form, please fold, staple, and return to address on back or Fax to: 919-727-3043.

NO POSTAGE
NECESSARY
IF MAILED
IN THE
UNITED STATES

BUSINESS REPLY MAIL

FIRST CLASS PERMIT NO.1999 GREENSBORO, NC

POSTAGE WILL BE PAID BY ADDRESSEE

DOCUMENTATION SERVICES
2400 Reynolda Road
Winston-Salem, NC 27199-2029